# County of San Diego

# Food Facility
# Plan Review Guide

## 2nd Edition

**Revised September 2015**

County of San Diego ◆ Department of Environmental Health ◆ Food and Housing Division ◆ Plan Check Division
5500 Overland Avenue ◆ San Diego ◆ CA ◆ 92123 ◆ (858) 505-6660 ◆ www.sdcdeh.org

# Table of Contents


| Section | Page # |
|---|---|
| Introduction | 3 |
| Plan Submittal and Inspection Process | 4 |
| Plan Submittal Requirements Checklist | 7 |
| Plan Check Flow Chart | 10 |
| Food Facility Final Inspection Checklist | 11 |
| Enclosure | 12 |
| Windows and Doors | 12 |
| Insect Control Devices | 13 |
| Outdoor and Satellite Areas | 14 |
| Finishes | 14 |
| Floors | 14 |
| Cove Base | 15 |
| Walls and Ceilings | 17 |
| Conduit | 18 |
| General Equipment | 19 |
| Refrigeration | 23 |
| Plumbing | 24 |
| Sinks | 25 |
| Water Heaters | 27 |
| Waste Disposal and Floor Sinks | 30 |
| Backflow Prevention | 32 |
| Grease Traps and Interceptors | 33 |
| Garbage Disposal | 33 |
| Warewashers | 33 |
| Ventilation | 35 |
| Exhaust Hoods | 35 |
| Outdoor BBQ and Wood Burning Oven | 37 |
| Electrical and Lighting | 38 |
| Food and Beverage Storage | 39 |
| Restrooms | 41 |
| Employee Areas | 42 |
| Janitorial and Trash Areas | 42 |
| Culinary Garden | 43 |
| http://www.sandiegocounty.gov/content/sdc/deh/fhd/food/foodplancheck.html | Online Appendix |

# Introduction

The purpose of this document is to provide you with assistance in the opening of a new food facility or remodeling an existing food facility. The procedures and the information contained are intended to assist you in a step-by-step manner and to provide a checklist of items necessary for a successful plan check process from initial plan submittal to the final plan check inspection.

**Who needs to submit plans?**
Food facilities that are built from the ground up, from existing building spaces, tenant improvements (TI) and existing food facilities that remodel, change equipment or their menu, are required by the California Retail Food Code to have plans submitted to the Department of Environmental Health (DEH). The Plan Check Program of the Food and Housing Division performs the review of the plans. They will also conduct construction inspections while your facility is being built and grant the final approval for the facility to open for operation once the work is complete. If you are not sure if you have to submit plans, contact the Plan Check Program at (858) 505-6659 to speak to a plan check specialist.

**When are the plans submitted?**
Plans must be submitted and approved prior to the start of construction. After this Department has approved your plans, you will also have to obtain approvals from the local building department. By law, a DEH plan approval may be needed before the local building department or the local Fire Marshall will approve your plans. The use of approved materials and good workmanship are significant factors in the evaluation and final field approval of food facility construction and equipment installation. A properly constructed facility enhances cleanability and operation. It also lessens the necessity for early repair or replacement of equipment or structure.

**What codes do we enforce?**
DEH inspects and enforces the California Retail Food Code, the California Plumbing Code, and the California Mechanical Code. You can find a copy of the California Retail Food Code on our website.

**How do you contact us and where are we located?**
We are located at:

- Main office: 5500 Overland Avenue Suite 110, San Diego, CA 92123
  Counter hours: 8:00 AM - 4:30 PM Monday-Friday (858) 505-6666

- North County Office: 151 East Carmel Street, San Marcos, CA 92078
  Counter hours: 8:00 AM - 4:00 PM Monday-Friday (closed at lunch) (760) 471-0730

| | |
|---|---|
| Plan Check Scheduling | (858) 505-6660 |
| Plan Check Technical Line | (858) 505-6659 |
| Website | www.sdcdeh.org |

Thank you for carefully reading this plan check guide before your plan submittal. If you have any additional questions, please contact us at (858) 505-6659 to speak to a plan check specialist.

# Plan Submittal and Inspections

## Submittal and Inspection Process

***A flow chart of this process is depicted on Page 10.***

1. **Submittal-** Submit all required plans, documents, and items to this department. See Plan Submittal Requirements section for items to be submitted*. 20 business days are given by state law to review plans. DEH has taken measures to reduce the review time to less than half that required by law; however, heavy demand may cause the review at times to approach the limit. Expedited plan review (within 5 business days) can be requested, call the scheduling line for availability and current fees.*

2. **Significant Corrections-** Plans needing correction or further information will have the deficiencies listed on a correction notice. Plans having a significant number of corrections (more than 5) will need to be corrected prior to submitting for re-check. A fee for this re-check will be needed at the time of the plan resubmittal. Once corrected and approved, these plans are considered ready for construction with appropriate building inspection permits. *Plans corrections are estimated to take roughly 5-10 business days to review.* **To help expedite this process clearly note on correction notice where the corrected items are located on the plan.**

3. **Minor Corrections or Blue Tag-** Plans needing minor corrections (1-5) will be Blue Tagged, which means that the corrections may be made at our office in the presence of our staff by appointment only. Once corrected and approved, these plans are considered ready for construction with appropriate building inspection permits. **To help expedite this process clearly note on correction notice where the corrected items are located on the plan.**

4. **Approval-** Congratulations, your plans have been approved! Once approved, two sets of the plans will be returned to the submitter. The specialist from the department who will be conducting the construction inspections will retain the third stamped set at the office. One of DEH's returned stamped plan sets must be kept at the site for reference to health code requirements during construction.

   Inspected plan sets, once approved or those needing correction, will be retained for a maximum of one year after the date of notification to the submitter. Submitters are encouraged to pick up their plan sets as soon as possible after notification.

5. **Revision-** Once approved, changes to the plans require plan resubmission and payment of a revision fee. Changes involving environmental health code matters must be approved prior to implementing the changes.

6. **Re-stamp-** Approved plans expire 1 year from the date the plans were approved by this department or 1 year from the last DEH construction inspection. Expired plans will be voided and new plans must be resubmitted for review. Re-stamps are done with a counter appointment, for a fee. Plans to be re-stamped must be identical to the approved set; any changes or additions to the plans will result in the submittal of revised sets.

7. **Non-Health Regulated Stamp-** A non-health regulated stamp is provided for a fee when other agencies are requiring DEH approval for a site that would not normally need submittal to this department. We retain one set of non-health regulated stamped plans after approval. A non-health regulated stamp is completed by appointment only.

8. **Consultation-** For plan check items that are more minor in nature, such as change of owner with the same menu or catering commissary approvals, a consultation with a plan check specialist can be requested for an additional fee. The consultation can also be requested prior to submitting plans or purchasing a facility to inform the operator of all the items that will need to be corrected. **The plan check consultation does not guarantee that plan submittal may not be required if the facility is not up to current code, or for other reasons.** A consultation can also be conducted at the office, by appointment, to answer questions.

9. **Inspections-** Up to 3 construction inspections of the facility are conducted by the DEH Plan Check Specialist after plans have been approved. More than three inspections will require additional inspection fees. Construction inspections must be scheduled at least 5-10 days in advance of the desired day of inspection. *After hours inspections can be requested, call the scheduling line for availability and current fees.* The person on the job site most directly responsible for the facility construction should be the person calling for the construction inspection appointments. Maintain at minimum one set of the DEH approved stamped set of plans on the job site to be used during DEH construction inspections. An application for the annual operational DEH health permit must be submitted to DEH prior to calling for the final inspection. The different types of inspections are as follows:

   a. **Preliminary Inspection-** This optional inspection is for the purposes of ensuring that the plumbing fixtures and stub outs installed in the facility are installed according to your plans. If there are no discrepancies, then the Specialist will approve this portion of the construction; however, if there are corrections, they must be completed prior to calling for the mid inspection.

   b. **Construction (Mid) Inspection-** This **mandatory** inspection is conducted when

your facility is 50-80% complete. We will be checking your installed floor, wall, and ceiling surfaces, and any equipment that may be installed, such as a hood exhaust system, cooking equipment, warewasher, sinks and everything specified on your plans. This is a very important inspection since you will be very close to your opening date. Any corrections can be accomplished without delaying your proposed opening date. When the Specialist has approved this inspection, **you will then need to apply for your Annual DEH Health Permit.**

c. **Pre-Final Inspection-** This optional inspection is completed prior to the final inspection. The inspector will check to see if the facility was built per the stamped health plans. During the Pre-Final inspection, the approval to stock the facility or train employees may be granted if occupancy or temporary occupancy has been granted by the building and fire officials. All equipment requested to be used prior to final inspection must be acceptable by all applicable agencies.

d. **Final Inspection-** This **mandatory** final inspection will be conducted after you have finished all of your construction and the local building and fire officials have granted their final approval or Temporary Certificate of Occupancy (TCO) for your opening. Proof of these approvals must be on the job site (e.g., final sign off on respective "job cards", etc.). ***The DEH Final Approval cannot be granted without these approvals.*** A permit application must be submitted and all fees paid for the Annual DEH Health Permit prior to the final inspection.

All utilities (electric, gas and potable water) must be available and operational for the final inspection, including hot and cold water to all fixtures as needed, the hood-exhaust system, refrigerators and warewashing machines. The facility must be thoroughly cleaned and ready to operate. Handsinks must be stocked with soap and paper towels in dispensers. It is vital that everything in your facility is functioning properly. Scheduling the final inspection well in advance of the proposed opening date facilitates the preparation for opening on time. You can open to the public once final approval is granted. Food facilities with open food/beverage preparation will have a grade card issued.

The California Retail Food Code requires an owner or employee to have a current **Food Safety Certification (FSC).** The individual(s) with the FSC should be the Person in Charge (PIC) of the kitchen operation and available during business hours. Schedule this food safety training prior to calling for approval to open. All employees who handle food, beverage or food contact surfaces should obtain a valid **San Diego** food handler card or in-house certification test within 10 days of employment. Visit our website for current information on the foodhandler requirements and locations for training. **See Page 11 for a complete Food Facility Final Inspection Checklist to help you successfully open on time.**

# Plan Submittal Requirements

✓ ***Below is a checklist of the documentation and items that will need to be submitted with the plans.***

☐ 1. **Application-** Complete and submit the plan check application. Ensure that all information is legible and the correct contact person is identified for the plan notification status.

☐ 2. **Menu-** Submit a complete menu detailing all food and beverage items for sale separate from the plans. If your menu changes regularly or seasonally, submit a representative menu with the types of food or beverage for sale. The food or beverage items listed on the menu determine what type and how much equipment is required.

☐ 3. **Fees-** Fees are charged for the review of the plans and are based upon the square footage of the food facility. For large markets 10,000 square feet and over, more than 1 preparation area will require additional fees to be paid. This fee includes up to 3 inspections performed during construction of the facility. The plan review fee does not include the Annual DEH Health Permit, which is separate and must be applied for prior to opening.

☐ 4. **Specification sheets-** Submit specification or cut sheets for equipment that clearly shows the certification or classification for sanitization and electrical standards by an American National Standards Institute (ANSI) accredited certification program such as National Sanitation Foundation (NSF), Underwriters Laboratory (UL), Edison Testing Laboratory (ETL), etc.

☐ 5. **Samples-** Samples of materials for surfaces such as the floor, walls or ceiling may be required to be submitted to determine properties such as durability, cleanability, or smoothness.

☐ 6. **Standard Operating Procedures (SOPs)-** SOPs may be required as part of the plan submission, particularly if the facility is doing a specialized process, requires a Hazard Analysis Critical Control Point (HACCP) plan, is a Satellite Food Facility or other circumstances deemed necessary by the department. Using acidification or water activity to prevent the growth of pathogenic organisms or packaging potentially hazardous foods using a reduced oxygen packaging (ROP) method will require that HACCP plans be submitted to the State of California, Department of Public Health for approval.

☐ 7. **Plans-** 3 identical complete sets of the plans, completed in a professional and legible manner and drawn to a state scale, are needed to stamp; however, one set is acceptable

for the initial review. The list of items, which are considered to constitute a complete set of plans and specifications, are listed under "Food Facility Plan Check Checklist." **At least three complete sets of the plans are required for final plan review and approval**.

**The plans must comply with the following items and must be documented on the plans:**

- **Number of sets-** 3 sets of plans must be submitted prior to obtaining final approval.
- **Plan size-** A food facility designer or consultant, draftsman, contractor, architect or owner may prepare the plans. The plans must be drawn in ink, in a professional manner, to a scale which is indicated on the plans (e.g., ¼ inch=1 foot, ½ inch=1 foot, etc.) and on a minimum 11 inch by 17 inch size paper. Ensure each sheet is sized the same and the font size is legible.
- **Facility information-** Provide the name and address of the food facility.
- **Owner information-** Provide the name and telephone number of the owner, contractor, and contact person.
- **Water information-** Provide the sewer and water district the facility is served by (e.g., City of San Diego or Helix Water District) or by a water well. If water provided to the food facility is from a water well, and/or the facility is connected to a sub-surface sewage disposal system, then an approval for their use, including design and testing, shall be obtained from the DEH Land and Water Quality Division (858) 565-5173 prior to plan approval.
- **Facility size-** Provide the total square footage of the facility.
- **Type of facility-** Indicate the type of food facility (e.g., 100% pre-packaged food, restaurant-single service disposable utensils, restaurant-multi service utensils, bar only, bakery, etc.) on the plans. Indicate if alcoholic beverages will be served. If no alcoholic beverages will be served indicate "No alcoholic beverage service".
- **Employees-** Indicate the number of employees per shift including managers.
- **Environmental Health Notes Section-** Provide all applicable Environmental Health Notes printed on the plans. See Environmental Health Note Appendix for the required Health notes.
- **Site map-** Include a site map of the facility and the surrounding area. Include the location of the trash area if exterior to the facility and any remote storage areas. State if the facility is within a food court or is using communal restrooms.
- **Floor plan-** Include all interior and exterior doors, toilets, dressing rooms, garbage and

trash areas, food preparation, dining, warewashing, office space, dressing rooms, etc. on the plans. Clearly identify all rooms. The food preparation, food storage and scullery areas must be fully enclosed at all times.

- **Equipment plan and schedule-** Provide a layout showing the proposed location of all of the equipment. Identify the equipment with a letter or number and provide an equipment schedule listing all of the equipment. The equipment schedule shall also include information such as make, model, description, electrical (KW), plumbing, gas requirements (BTU), waste method, how the equipment is installed or other pertinent information. Provide elevations showing the equipment in the proposed location and sneeze guard dimensions. All equipment must be certified for sanitation and electrical standards by an ANSI accredited agency (NSF, UL, ETL, etc.). See Page 19 for further information and the Appendix for examples.

- **Finish schedule-** Provide a table showing the complete finish schedule for the floors, walls, ceiling and cove base. Indicate the type of material, the color, the surface finish and the type of integral cove base at the floor/wall juncture. Samples of finishes should be submitted with the plans. See Page 14 for further information and the Appendix for examples of floor finishes and schedules.

- **Plumbing plan and schedule-** Provide complete plumbing layout and isometric diagram showing sewer, waste drains, floor sinks, floor drains, grease traps or interceptors, and all water supply lines. Clearly identify make, model number, gallons, and BTU/KW of hot water heater. Show the calculations for sizing water heater. Provide a spec/cut sheet for the proposed water heater. See Page 24 for further information and the Appendix for examples.

- **Mechanical plans-** Provide complete mechanical plans including hood exhaust ventilation system layout and room ventilation (e.g., restroom). Indicate the type of hood specified for the particular cooking equipment being ventilated. Provide elevations showing proposed cooking equipment under the ventilation hoods. If the hood is U.L. listed, provide mechanical plans from manufacturer; or if the hood is custom, provide all measurements and formulas used. See Page 35 for further information and the Appendix for additional hood information.

- **Electrical plan-** See Page 38 for information relative to environmental health electrical/lighting requirements that need to be identified on the plans.

- **Window and door schedule**- Provide a schedule identifying or clearly indicate on floor plans all of the doors and window used in the facility. See Page 12 for further information. Elevations are required showing enclosure details and dimensions for areas such as pass thru-windows, demonstration areas, and open dining room.

# Plan Check Flow Chart

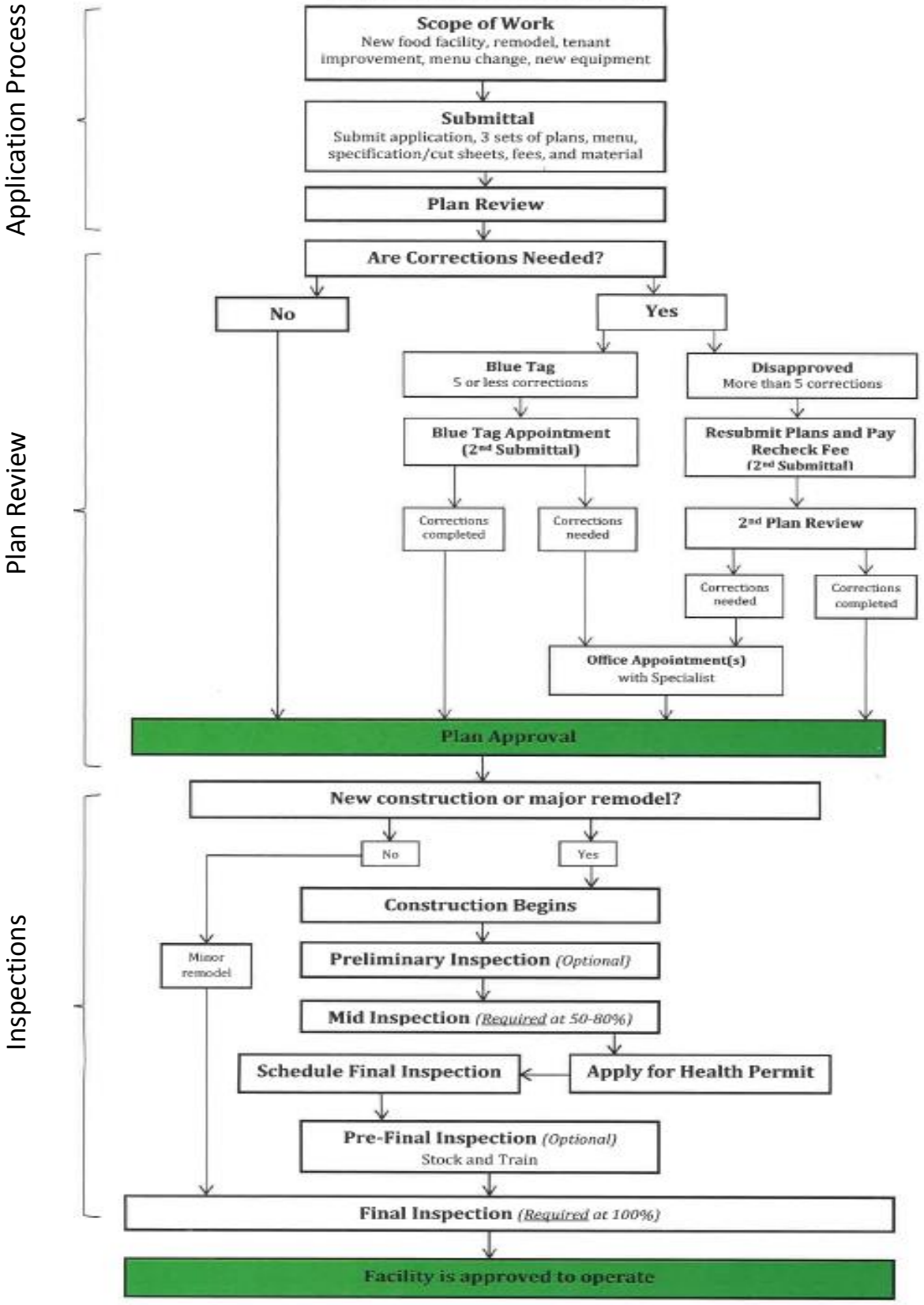

# Food Facility Final Inspection Checklist

**This checklist will help you prepare for your final plan check inspection. Ensure that the items listed below are completed and can be verified during inspection. Remember to call (858) 505-6660 at least 10-15 calendar days prior to the anticipated final inspection date to secure your appointment.**

## ✓ Check the following items as you complete them

_____ **1** **APPROVED CONSTRUCTION:** All construction was completed according to the plans approved by the Department of Environmental Health (DEH).

_____ **2** **OBTAINED NECESSARY APPROVALS:** Final or Temporary Certificate of Occupancy from local Building Authority and Fire Department (if required).

_____ **3** **PLANS AVAILABLE FOR INSPECTION:** An approved set of DEH-stamped plans is available for final inspection.

_____ **4** **EQUIPMENT OPERABLE:** All approved equipment is in place, can be turned on, and operates properly.

_____ **5** **REFRIGERATION EQUIPMENT:** All refrigeration equipment is at 41°F or below and it is equipped with a valid thermometer. Freezers are operating at freezing temperatures.

_____ **6** **HOT & WARM WATER:** Hot water of 120°F is available at all sinks and warm water from 100°F-108°F is available at all handsinks.

_____ **7** **HANDSINKS STOCKED:** All handsinks are stocked with handwashing soap and paper towels in dispensers.

_____ **8** **WAREWASHING SINK STOCKED:** Warewashing sink is stocked with detergent soap, sanitizer, and a testing method to measure the sanitizer

_____ **9** **BACKFLOW DEVICES INSTALLED:** Devices are installed between the potable water supply and the piece of equipment. Certifications are provided for review for testable backflows.

_____ **10** **CERTIFIED PERSON IN CHARGE (PIC):** PIC has a valid Food Safety Certification.

_____ **11** **FOODHANDLER TRAINING:** All employees have obtained a San Diego County Food Handler card or completed in-house test within 10 days of employment

_____ **12** **CLEANLINESS:** The facility is clean and free from vermin.

***Failure to complete the above items may prevent you from obtaining final approval for your project or require rescheduling of the final inspection. For additional questions on how to prepare for your final inspection, please call the Plan Check Technical Line at (858) 505-6659.***

# General Construction and Equipment

Please remember that our Plan Check and Construction staff will interpret how you have designed your food facility by looking at your plans. The more information you provide in the following areas, the better we can assess how your design will conform to the laws and regulations pertaining to food facility construction. Your set of plans must show and specify the following in detail:

## Enclosure

A food facility must be **FULLY ENCLOSED** where the food storage, warewashing and food preparation areas are located to prevent entry of vermin and protect the food from contamination. The flow of raw food, cooked food, dirty food contact surfaces, trash and many other factors contribute to the facility layout and enclosure. Customers or patrons are not allowed to be in or pass through the food preparation, storage or scullery areas unless these areas are protected by a space of at least 3 feet from the customer; separated from the required space by a rail or wall at least 3 feet high and not in areas where raw or undercooked food are located. An open dining area may be acceptable if the kitchen areas are fully enclosed and there is no demonstration cooking, food preparation or open food storage in unenclosed areas. **Window and Door schedules must be submitted with the plans and elevation views of these areas provided.**

Air curtains may be required at delivery, cargo door, or pass-thru windows, but cannot replace exterior walls or doors. Air curtains must be certified to NSF/ANSI Standard 37.

1. **Pass-thru Windows-** Openings in the walls of food facilities may be constructed in order to serve food prepared in the facility to customers waiting outside. The following requirements are designed to facilitate this type of operation and to ensure that openings do not contribute to the entry of undesirable insects and dirt.

    - Pass-thru windows are limited to a maximum of 216 square inches and are provided with a self-closing screen or window.

    - Pass-thru windows, whose open area is greater than 216 square inches, but not larger than 432 square inches, are allowed if equipped with an air curtain device that will produce an air flow 8 inches thick at the discharge opening and with an air velocity of not less than 600 feet per minute across the entire opening. Air curtains for these types of openings will be micro-switch activated when the sliding door is opened. They are also required to have a self-closing solid or screened window.

- Multiple pass-thru windows must be located a minimum of 18 inches apart.

- The screen of a pass-thru window must be at least 16 mesh per square inch.

- The counter and service area of a pass-thru window shall be smooth and easily cleanable.

2. **Window Screens-** To prevent the entry of flies, dust and other undesirable conditions into the food facility, all operable windows located anywhere in the facility opening to the outside are required to be screened. The screening must fit the window opening securely. A minimum 16 mesh per inch screen material is required and must be specified on the plans. Screened windows or walls are not approved over food prep, warewashing, or food storage areas.

3. **Insect Control Devices-** If they are designed to electrocute or stun flying insects, they must retain the insect within the device. They are not allowed to be positioned over food preparation, storage, or warewashing areas.

4. **Exterior, Exit and Cargo Doors-** Door openings to the outside must be protected to prevent the entry of rodents, insects, dust and dirt. ***Roll-up doors, garage door, nano walls, and other large openings to the exterior are not allowed in areas where food preparation, storage, or warewashing will occur.***

    a. **<u>All exterior doors of a food facility must be outward opening and self-closing</u>-** If an exterior door cannot be made to open outward, then a tight-fitting self-closing screen door that opens outward will need to be installed in the door opening or an air curtain installed for the inward opening door. Sliding doors must be automatic types. Folding or accordion doors are not acceptable for exterior doors.

    b. **Delivery Doors-** A delivery door that opens into the food processing, food storage, or warewashing area is required to have an air curtain device installed over the door opening. The air curtain device is to be activated by a micro-switch and provide an air velocity of at least 750 feet per minute, measured three feet above ground level at the door opening.

    c. **Cargo Doors-** Large cargo type doors can only open directly into a room where food is stored only in unopened bottles, cans, cartons, sacks, or other original shipping containers. Cargo type doors that open into any food warehouse or food facility may only be open during deliveries. In order to prevent the entry of rodents and undesirable insects, cargo type doors must be installed to be tight fitting. An air curtain is required on these types of doors to prevent the entry of flying insects and dust when the door is open. At cargo doors or delivery doors greater than 4 feet, an air curtain device is to

provide an air velocity of at least 1600 feet per minute, measured 3 feet above ground level at the door opening that is activated by micro-switch.

5. **Outdoor areas-** All outside bars, satellite food areas, or self-service equipment must be provided with full overhead coverage over all equipment and satellite food processing areas and have a means to enclose the area (e.g., covering, roll down walls, etc.) in times of inclement weather, protection from vermin, and when not in use.

6. **Satellite Food Facility-** A satellite food facility is restricted to "limited food" preparation as defined in the California Retail Food Code Section 113818 and is operated on the property by a fully enclosed permitted food facility. Satellite food facilities require approved Standard Operating Procedures submitted with the plan review.

# Finishes

Finishes in a food facility include the materials that make up the floors, walls, ceilings, and cove base. These materials must be durable, smooth, and easily cleanable to withstand frequent cleaning. Samples of the finishes may be required prior to approval. A finish schedule of all floors, walls, ceilings and cove bases must be provided in the plans. We recommend that the finish schedule be shown in a table. For more information on finishes refer to the Appendix.

1. **Floors-** The floor surfaces of a food facility must be durable, cleanable, and impervious to water, food, food by-products, grease, and chemicals used on the floor for cleaning or other purposes. Examples include, but are not limited to, the following (certain restriction may apply and a sample may be required for approval): Ceramic, porcelain, quarry tile, troweled on epoxy type floor, commercial sheet vinyl, or sealed concrete.

   - Flooring under equipment shall be completely smooth for cleanability. Floor surfaces that contain anti-slip agents or surfaces are limited to foot traffic areas only.

   - The floor sealant for concrete must be grease and acid resistant and USDA and FDA approved for use in a commercial kitchen.

   - Vinyl Composite Tile (VCT), wood, carpet, etc. is only acceptable for customer dining areas or pre-packaged retail display.

   - Floor drains are required in areas where warewashing machines are used, in

cooking areas, in janitorial rooms with mop sinks, in bars equipped with bar sinks or glass washers, and in front of walk-in coolers or equipment, which are cleaned by water flushing or where products are iced down. The floor surface needs to slope to the floor drains (¼ inch per foot). *Commercial Sheet Vinyl is not approved in these areas or in cooking areas.*

2. **Cove Base-** Floor surfaces in all areas where food is prepared, packaged, dispensed, or stored (including walk-in refrigerators and freezers), where any utensil is washed, where refuse or garbage is stored, where janitorial facilities are located, in all toilet and hand washing areas and storage rooms, is to be of an approved floor surface that continues up the wall at least 4 inches with a ⅜ inch minimum radius cove as an integral unit. This extension of the floor includes toe-kicks of counters and equipment that sets flush on the floor.

   - A "slimfoot tile" cove base is approved for use on sealed concrete flooring.

   - Vinyl Rubber Top set or Rubber Cove Base is acceptable <u>only</u> in rooms that are dedicated to prepackaged non-refrigerated dry storage.

   - A metal cove base is approved in walk-in refrigeration and freezers only or around large equipment (e.g., bakery ovens)

# <u>Flooring and Cove Base Installation Examples</u>

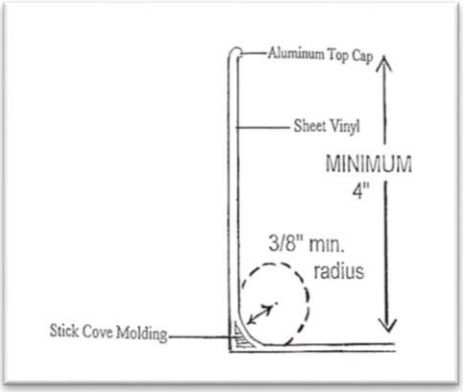


**Fig. 1 Commercial Sheet Vinyl Installation**

***(Not approved in cooking areas or areas subject to high moisture)***

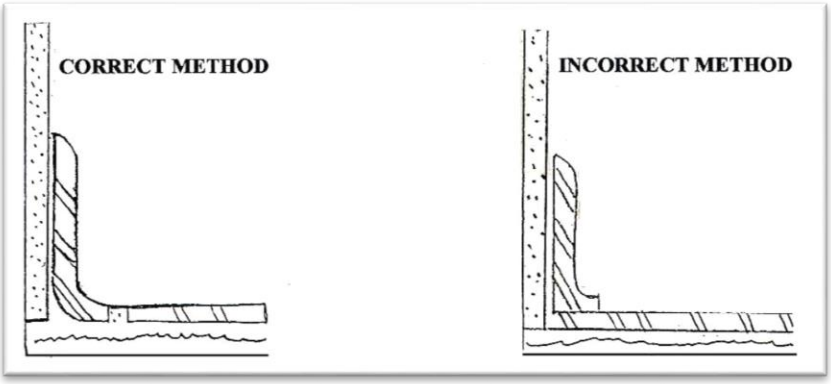


**Fig. 2 Quarry/Ceramic Tile Floor and Cove Base Installation**

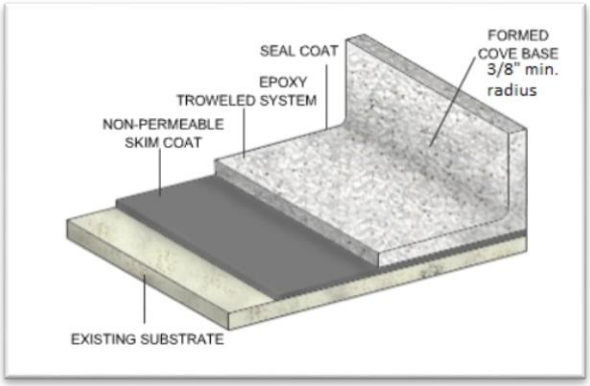


**Fig. 3 Troweled on Epoxy Floor and Cove Base Installation**
***(Troweled on epoxy floor specifications must indicate that the material is USDA/FDA approved for use in a food facility and is acid and grease resistant)***

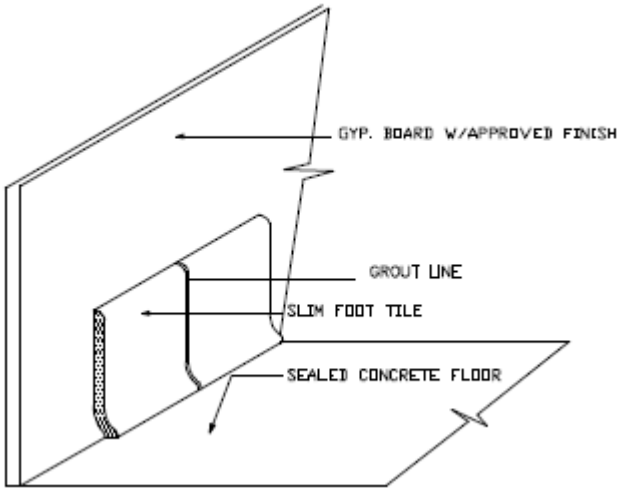


**Fig. 4 Typical Cove Base Detail at Service Counters**

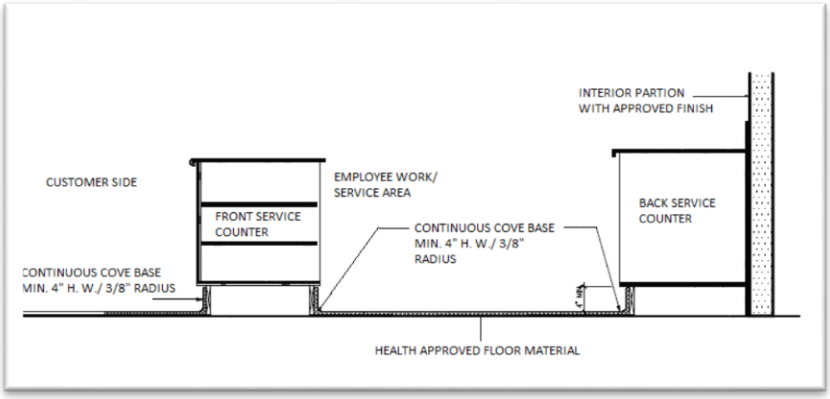


**Fig. 5 Typical Cove Base Detail at Service Counters**

3. **Walls and Ceilings-** Wall and ceiling surfaces of a food facility are required to be smooth for cleanability and we recommend that they are light in color in order to assist in detecting dirty areas. Walls in certain areas are also required to be durable in order to withstand moisture, repeated cleaning, high heat, and chemicals used in cleanup activities. Examples include, but are not limited to the following (certain restriction may apply and a sample may be required for approval): Gloss or semi-gloss enamel paint, approved epoxy coatings, fiber reinforced plastic (FRP) panels, ceramic tile, synthetic enamel paint, polished stainless steel sheeting, and lay-in vinyl panels for ceilings.

- Walls in all areas except the dining spaces are required to be durable, smooth surface and have an easy to clean and washable surface. Wall surfaces that ***cannot*** be used include brick, concrete block, rough concrete, rough plaster, grooved paneling, wallpaper, screens, and vinyl wall coverings. These surfaces are either too rough, not cleanable or don't have sufficient durability.

- Wall surfaces behind sinks (e.g., pots and pans, janitorial, utensil, food preparation, hand sinks) and warewashers must have a minimum 8 foot high water resistant wall material. FRP, stainless steel, ceramic tile, or other approved materials are acceptable in these areas. FRP and metal flashing surfaces need to be sealed to the sub-wall surface.

- Wall surfaces of toilet rooms are required to be smooth and cleanable. Walls behind hand sinks, toilets and urinals will need wainscoting that complies with local building department requirements. The wainscoting is required to be a minimum of 4 feet high from the floor finish, smooth surfaced, durable, and water-resistant.

- Wall surfaces in walk-in refrigerators and freezers must be smooth surfaced, moisture proof, durable, and able to withstand prolonged exposure to low temperatures. The walls and ceiling shall meet the applicable NSF/ANSI standards.

- If you have a wall surface material that you desire to use in your food facility and are not sure if it would meet these requirements, please submit a sample for evaluation. We will be able to assist you in your decision.

- Wall surfaces in bars where alcoholic beverages are sold or served directly to the customer need only to be durable and cleanable. A smooth, water resistant, durable, and cleanable wall surface is required behind bar sinks, the underside of the bar counter and above all wet fixtures (e.g., sinks, ice wells, etc.).

- Blown-on acoustical ceiling material and textured lay-in acoustical ceiling panels may be used only in dining rooms and non-food preparation or handling spaces (e.g., hallways, pure office spaces, etc.).

4. **Conduit-** Conduit must be properly installed in the food facility so that it does not cause or contribute to cleanability problems.

   - All plumbing, electrical, and gas lines are required to be concealed within the building structure to the greatest extent possible. Conduit, plumbing, or piping cannot be installed across any aisle way, traffic area or door opening.

   - In circumstances where it is (primarily structural limitations or restrictions of the building) not possible to install conduit behind the walls, all conduit runs are to be located at least ¾ inch away from the walls or ceilings using standoff brackets and a minimum of 6 inches above the floor. Conduit is to be installed so that it is secure.

   - Where conduit or plumbing lines, including soda chase lines, enter a wall, ceiling or floor, the opening around the conduit or plumbing is required to be tightly sealed to prevent the entry of rodents or vermin. The sealant material must be rodent proof.

   - Multiple runs or clusters of conduit or pipelines or soda line chases are required to be furred out and encased in an approved runway or other sealed enclosure.

   - All overhead exposed waste lines, regardless of location in the food facility or type of piping, must have a catch trough installed under the line. The trough is to be waterproof, running the entire length of the exposed waste line, and of a width one inch wider than the outside diameter of the exposed waste line, fittings and couplings. (Trough ends should terminate at a wall or drain through plumbing that will dump to a floor sink or other approved waste plumbing connection.)

# General Equipment

A food facility must have the correct equipment to create the food and beverages on the menu. Equipment includes all surfaces in the food preparation area, storage, and warewashing areas, utensils, refrigeration, warewashing machine, cooking equipment, ventilation hoods, and anything else used in the preparation, sale, service and display of food. **The plans must provide an equipment schedule or list of equipment that is identified by a coding system (letters or numbers) and corresponding equipment plan that shows the location of the equipment**. For examples of the equipment plan and schedule refer to the Appendix.

- All equipment must be durable, smooth, easily cleanable, non-absorbent, non-toxic, and will not allow for the contamination of food under normal use. Wood and wood wicker are not an approved food contact surface excluding hard woods like maple that may be used for approved purposes only. Copper and copper alloys are not approved for use with foods that have a pH below 6 with the exception of beer brewing.

- All proposed equipment must be certified for NSF/ANSI Standard 2 for food equipment by an ANSI accredited certification program such as, but not limited to NSF, ETL, UL, etc. All electric appliances must also be certified for UL standards for electrical equipment.

- All equipment must be installed on 6 inch sanitary legs, commercial casters, cantilevered from the wall or placed on a minimum 4 inch coved curb. Counter top equipment must be portable, sealed to the table or counter or elevated on a minimum of 4 inch approved legs.

- Recommend clearances for large equipment set on floor (e.g., walk-in cold storage, bakery ovens, proofers) are 6 inches for equipment less than 4 feet, 12 inches up to 6 feet, and 18 inches beyond 6 feet. Large equipment however should be secured to the walls with stainless steel flashing.

- Multiple worktables must be used in facilities with large volumes of food or buffets.

1. **Refrigeration and Freezers-** All refrigeration and freezers must be mechanical, in good repair, and maintain the food at the required temperature (41°F or below for refrigeration and freezing for the freezer). "Drop In" cold plates are not approved. The refrigeration should be positioned in the facility to allow for good and safe work flow. Examples of good flow include having walk-in refrigeration placed near to a delivery door to allow for the food to be quickly placed into temperature after receiving and adequate "in-use" refrigeration on the cook line. Refrigeration must be

certified to NSF/ANSI Standard 7. See Page 23 for further information on refrigeration guidelines.

2. **Cooking Equipment-** All cooking equipment must be placed under an adequate ventilation hood. High temperature equipment such as solid fuel equipment, charbroilers and tandoori ovens require a hood rated to 600°F (700°F and spark arrestors for solid fuel). Cooking Equipment must be certified to NSF/ANSI Standard 4. See Page 35 for more information on Mechanical Ventilation. *There is an exemption from mechanical ventilation for a maximum of 2 pieces of approved electric equipment that do not produce grease laden air such as a waffle iron, Panini grill, or convection oven 12 KW and under used for the baking of bakery products.*

3. **Sinks-** A facility that handles open food or beverages is required to have handsinks located in each area used for food processing, scullery, by remote ice-machines, wait stations with ice bin, and restrooms. The facility must also have a 3-compartment sink for warewashing and a floor mounted janitorial sink. A prep sink will be required if the facility is prepping fruits or vegetables. For buffets and facilities with an extensive menu, two separate prep sinks will be required, one for vegetable and one for meat preparation. A dump sink is required for facilities that are mixing or blending drinks. Refer to Page 24 and the Appendix for more information on plumbing and requirements of sinks.

4. **Warewash Machine-** In addition to the 3-compartment sink, high temperature or chemical sanitizing warewash machines are allowed for warewashing purposes. The warewash machines can be under the counter and/or conveyor styles. High temperature conveyor style warewash machines require a Type II ventilation hood or a vapor/steam lock at the end of the cycle. Warewash machines must be certified to NSF/ANSI Standards 3 and 29. See Page 34 for more information on warewash machines. <u>The warewashing machine does not take the place of a 3-compartment sink</u>.

5. **Counters and Cabinets-** Surfaces that will be used as food contact surfaces including food preparation, processing, high heat, or moisture must meet NSF/ANSI Standard 2 for food equipment. Approved materials in this location include stainless steel and polyacrylic filled sheets such as Corian and Gibraltar. Plastic laminate is not an approved food contact surface. Approved cutting boards are required for food preparation on areas that do not adhere to NSF/ANSI Standard 2.

   Counters and cabinetry must be constructed of a corrosion-resistant, non–absorbent, and smooth material that allows for easy cleaning. Where millwork is allowed, a high pressure laminate or other material is required that meets NSF/ANSI Standard 35 on all surfaces including the underside and inside of the unit. Any penetrations in the millwork must be sealed with a grommet or other approved device.

6. **Ice Machine-** Ice machines must be located inside the fully enclosed food facility. The area in which the ice machine(s) are located must have adequate ventilation and be easy to clean. Condensation and ice melt drippage is required to drain into an adjacent floor sink via legal air gap. Large ice machines of 800 lbs. or more are recommended to have a floor trough positioned at the front of the ice machine to catch the waste ice that occurs when dispensing. Ice machines must be certified to NSF/ANSI Standard 12.

7. **Dipper Well-** A running water dipper well is required for the storage of scoops for frozen desserts when in use. The dipper well must drain into a floor sink via a legal air gap separation. The water spigot supplying water into the dipper well needs a legal air gap separation.

8. **Clean in Place (CIP) -** Equipment must be able to be properly washed, rinsed, and sanitized in a warewash machine or 3-compartment sink (fully immersed in a bay) or it is considered CIP. Some examples of CIP equipment are large mixers, large skillets, yogurt/soft serve machines, or large kettles. CIP equipment must be constructed so that cleaning and sanitizing solutions circulate throughout a fixed system and contact all interior food contact surfaces and the system is self-draining or capable of being drained of cleaning and sanitizing solutions. CIP units must be supplied with a fill method (fill faucet) and a method to dump the waste to a floor sink or trough drain.

9. **Steam Tables-** A "dry" or "wet" steam table is a piece of equipment used to maintain food hot. A "wet" style steam table must be provided with a fill faucet and a method to drain water waste to a floor sink via a legal air gap. The fill line of the steam table may be required to have an approved backflow device installed if below the flood level of the unit. A steam table is **<u>not</u>** approved for re-heating purposes, only hot holding.

10. **Self-Service Equipment**- Self-service equipment, such as drink dispensers, bulk item bins, and buffet lines require further levels of protecting food from contamination.

    - **Drink Dispenser-** A self-service soda dispenser must be designed to prevent contact with the lip-contact area of the glass or cup when refilled by activating the beverage flow with a lever or button to fill. Drink dispensers must be certified to NSF/ANSI Standard 18.

    - **Bulk Items-** Bulk items bins must be provided with self-closing lids and an approved dispensing utensil.

    - **Buffet Lines-** Buffet lines must have adequate sneeze guards or other methods protecting the food and food contact surfaces from contamination (See below and the Sneeze Guard Appendix for more information on sneeze guards). Clean plates or bowls must be provided for each use of the buffet. Suitable dispensing utensils must be provided for dispensing of each item.

11. **Sneeze Guard-** Self-service displays of unpackaged foods or utensils are required to be shielded so as to prevent "droplet" contamination from the customer. A properly designed "sneeze guard" or “food shield” serves to intercept a direct line between the customers "mouth and nose zone" and the food or utensils being displayed. (In other words, we want to prevent sneezing, spitting, and coughing onto the food we all eat). Sneeze guards are designed to meet the critical dimensions. See the Sneeze guard Appendix for more information.

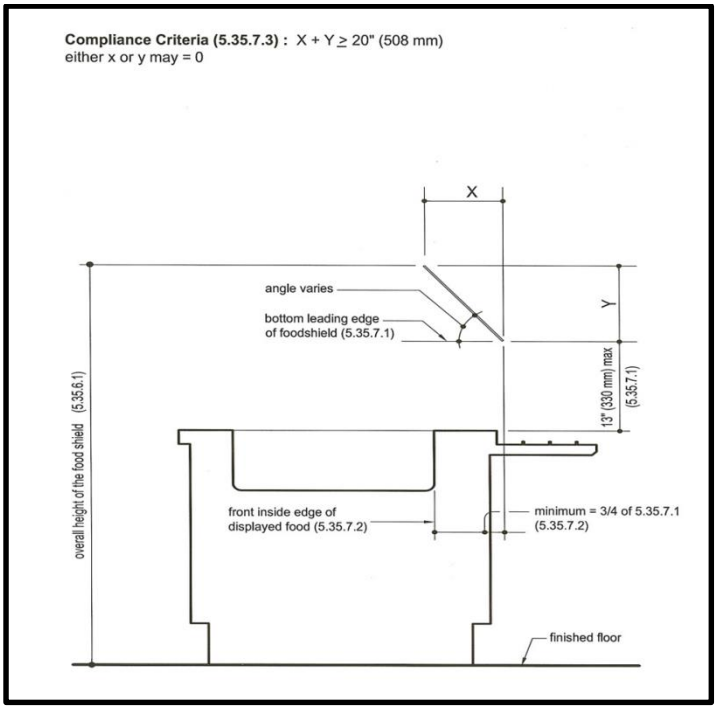


**Fig. 6 NSF Example of a Self Service Sneeze Guard**

- Sneeze guards are required for cafeteria, buffet, and salad bar service, food preparation equipment and food preparation areas.

- Sneeze guards may be sized to the population that will be using them. For example, sizing the sneeze guard shorter at a school cafeteria.

- Cleaned and sanitized glasses and stemware that are displayed or stored in bar areas over customer service counters are required to be protected from customer contamination (e.g., touching, cigarette/cigar smoke, etc.).

12. **Frozen Dairy Dessert Equipment-** Ice cream machines, soft serve machines, gelato makers, and the production of any frozen dairy product requires a permit from the California Department of Food and Agriculture (CDFA) (916) 654-0773. Dispensing freezers must be certified to NSF/ANSI Standard 6.

13. **Specialized Process Equipment-** Specialized processes like reduced oxygen packaging, shell stock tanks, etc. will require submittal of spec/cut sheets for all equipment and possibly HACCP plans and/or Standard Operating Procedures for all

equipment and processes. Depending on the process, HACCP plans may also need to be submitted to the State of California for approval.

# Refrigeration

Adequate refrigeration space and equipment is an essential element in the operation of a food facility. In order to quickly chill perishable foods from cooking temperature to refrigeration temperature, adequate capacity is needed. Adequate space must be provided to properly hold all foods needing refrigeration and be able to handle the needs of the food facility. **All refrigeration and freezers, including walk-in units, should be clearly identified on the equipment plan and schedule.**

1. **General Requirements-** Refrigeration equipment must be specifically constructed for commercial usage. Refrigeration equipment must be listed by an ANSI accredited agency for sanitation and electrical standards (e.g., NSF, ETL, UL, etc.) for installation in food facilities. *Refrigerators designed and certified as marketer refrigerators "for the sale of prepackaged food items only" are not acceptable for the storage of open potentially hazardous food items.*

   - Domestic type refrigeration units are not acceptable in food facilities. Domestic refrigeration units do not have sufficient refrigeration capacity, are not easily cleanable, and generally do not withstand the usage associated with a commercial food facility.

   - All refrigeration units are required to have an accurate, readily visible, working thermometer. The thermometer should be placed in the "warmest" part of the compartment, usually near the door.

   - Shelving, floor, wall, and ceiling finishes of refrigerator and freezer units need to be nonabsorbent and easily cleanable. Wood and vinyl are not acceptable materials for refrigeration storage shelving. All joints must be sealed.

   - Condensate waste from walk-in refrigeration and freezers and reach-in refrigeration and freezers must drain indirectly, via a legal air gap, to a floor sink unless self-contained. Remote condensers for walk-in coolers (100 sq. feet or less in size) may drain condensate into properly installed and functioning evaporator units.

   - Rapid cool down facilities or blast chillers may be required depending upon the food operation and where storage space is limited.

   - Shelving of a walk-in unit is required to be listed by an ANSI accredited agency (e.g., NSF, ETL, UL, etc.). The shelving must keep foods off the floor of the walk-in

unit by a minimum of 6 inches, be constructed of smooth metal, have NSF-type metal legs or be cantilevered from the wall surface for ease of cleaning. Small, easy to move, castered dollies may be used in place of a lower shelf inside of a walk-in unit.

- Walk-in refrigerator units are required to open directly into the food facility. Exceptions may be granted for outdoor beverage/keg coolers and freezers for receiving food only.

2. **Refrigeration Facilities Size and Design-** The plan review for storage needs to provide adequate refrigeration facilities for the proper storage, transportation, display, and service of potentially hazardous foods. Specific refrigeration needs will be based upon the menu, number of meals, frequency of delivery, and preparation in advance of service.

- All refrigerators must be capable of maintaining potentially hazardous foods (PHF) at 41°F or below. If potentially hazardous foods are prepared a day or more in advance of service, a rapid cooling procedure capable of cooling potentially hazardous foods from 135°F to 41°F within 6 hours (the decrease in temperature from 135°F to 70°F shall occur in 2 hours) shall be provided. Blast chillers should be considered for rapid cooling.

- The capacity of the rapid cooling facilities must be sufficient to accommodate the volume of food required to be cooled to 41°F within 6 hours. Provide point-of-use refrigerators and freezers at work stations for operations requiring preparation and handling of potentially hazardous foods. Refrigeration units, unless designed for such use, should not be located directly adjacent to cooking equipment or other high heat producing equipment which may tax the cooling system's operation.

- Refrigerated worktables are needed when the menu includes assembling potentially hazardous foods. These units provide easy access to foods from the top of the unit; however, are not designed for long-term storage of food or cooling of food.

# Plumbing

When planning the food facility layout, careful consideration must be made in regards to the general plumbing. It is important to base the plumbing layout (e.g., scullery fixtures, handwashing sink number and placement, grease interceptor, hot water demand, waste receptacles, water supply, etc.) on the flow of food in order to reduce the risk of cross contamination. **A complete plumbing plan, showing all water and waste connections,**

**and plumbing schedule must be submitted with the plans.** Refer to the Appendix for more information on plumbing.

1. **Sink Fixtures Requirements-** Depending on the type of food operation, various sink requirements apply. All sink fixtures must be listed by an ANSI accredited agency (e.g., NSF, ETL, UL, etc.) and equipped with a hot and cold water supply.

   - **<u>The following sinks may be required for 100% Prepackaged food facilities</u>*:**

     a. A minimum 24 inch X 24 inch floor mounted **mop sink**. *See below for further requirements.*

     b. **Handwashing sink** with soap and paper towel dispensers for the restroom.

     ***Note: A 100% prepackaged food facility means that there is no preparation of food or drinks, ice packing, or handling, unpackaged candy, snacks or beef jerky, and no liquid beverage dispensers.**

     ***Note: Facilities with only 25-300 square feet of non-potentially hazardous prepackaged food display and storage total do not required a mop sink.**

   - **<u>The following sinks are required for a food facility that handles unpackaged food or beverage</u>:**

     a. A **3-compartment warewashing sink** with minimum 18 inch integral dual drain boards and has waste drain indirectly to floor sink via a legal air gap. Refer to the Appendix for more information on 3-compartment sinks.

     When a sink is installed next to a wall, a metal "backsplash" extending up the wall at least 8 inches is recommended to be integral to the sink. The backsplash needs to be sealed to the wall to close any gaps between the sheet metal and wall surface.

     Large food facilities that have separately operating food sections (e.g., bakery, deli, meat market, etc.) handling unpackaged foods will require a 3-compartment sink in each food processing area. Where multi-service utensils are washed by hand, a minimum 3-compartment sink is required. Utensil sinks must meet all NSF/ANSI standards.

     b. **Hand sink(s)** with soap and paper towel dispensers are required for each food processing area, scullery/warewashing area, and restrooms.

If a handsink is located directly adjacent to a food preparation surface, food storage, prep sinks or utensil-washing sinks, then a 6 inch metal splashguard or a 24 inch space is required to prevent splash over from the handsink to the adjacent item. If the handsink is centrally located in a counter top, then splashguards must be located on both sides of the sink.

Each handsink shall provide hot and cold running water, under pressure, through a mixing type faucet. **Premixed hot water provided at a hand sink where the operator cannot adjust the hot and cold water mix for themselves, must have the tempered water set between 100°F -108°F. Self-closing or metered faucets shall provide at least 15 seconds of warm water before reactivation.**

c. A minimum 24 inch X 24 inch floor mounted **mop sink** (a minimum 24 inch X 36 inch floor mounted mop sink may be required if floor mats are to be washed) is required with an integral vacuum breaker at the faucet.

   Chemical dispensers that are connected to the faucet must include a pressure bleeding device on the faucet outlet. This would include a wasting tee, flow-through device or otherwise known as a 'sidekick' device. A "Y" connector that has an integral shut off valve cannot be connected to a faucet that has an integral atmospheric vacuum breaker. A separate waterline should be plumbed for chemical dispensers to avoid having a pressure bleeding device.

   The janitorial sink is required to be located in a separate janitorial room or separated from the rest of the food facility equipment by a solid partition or wall that is a minimum of 6 feet in height.

   A janitorial room or cabinet is required to be provided for the storage of cleaning equipment (e.g., mops, buckets, brooms, etc.) and supplies (e.g., soap, cleansers, waxes, bleach, etc.) and is to be kept separate from any food preparation, utensil washing or storage area for food or utensils. Wall mop hangers are needed to store wet mops at the janitorial room/cabinet to dry.

d. A **food preparation sink** with a minimum 18 inch X 18 inch X 12 inch one-compartment basin, separate from the three-compartment warewashing sink, with an integral 18 inch drain board for food processes such as thawing, washing, soaking, rinsing, etc. is required. This food preparation sink must drain indirectly to a floor sink via a legal air gap. The food preparation sink may also be integral in a worktable. Equipment is not approved to be positioned on the drainboard of the prep sink.

e. For food facilities with a blender beverage station, a **dump sink** that drains indirectly to a floor sink via a legal air gap is required.

f. For food facilities with a bar, a **dump sink or dump box** that drains indirectly to a floor sink via a legal air gap is required.

g. **Bar sinks** are to have a minimum compartment size of 10 inches X 14 inches X 10 inches deep (or a minimum of 140 square inches in surface area), with dual integral drainboards, and be a minimum of 18 inches long. Bar sinks are also required to have a quick drain or 4th sink compartment for disposal of drink/ice waste if a separate dump box or dump sink is not provided. Bar sinks are required to drain to an adjacent floor sink via a legal air gap.

   Where multi-service drinking utensils are washed by hand, a minimum 3-compartment sink is required. Drinking utensil sinks must meet all NSF/ANSI standards. Bar sinks and bar warewashers are not required for bars that are inside restaurants with full warewashing areas; however they are recommended for ease of cleaning.

2. **Water Supply Requirements-** An adequate protected, pressurized, potable supply of hot water and cold water shall be provided. The water supply shall be from a water system approved by the health officer or the local enforcement agency. Hot water must be supplied at a minimum temperature of 120°F as measured from the faucet throughout the facility. Refer to the Appendix for more information on water heaters.

- Hot water generation and distribution systems shall be sufficient to meet the peak hot water demands throughout the food facility.

  a. **Sizing Requirements of Tank Style Water Heaters-** To size a water heater, the peak hourly demands for all sinks, warewashing machines, and other equipment that use hot water in the facility are added together to determine the minimum required hourly recovery rate.

     - **80% of the total hot water demand is required for facilities that use single service eating and drinking utensils or are take-out only.**

     - To compute a BTU or KW rating for the required hourly hot water demand the following formulas should be used:

**Formula 1** (for gas water heaters)

$$\text{BTU input} = \frac{\text{GPH X °Rise}^{1}\text{ X 8.33 lb. / gallon of water}}{\text{Thermal Efficiency}^{2}}$$

$$\text{Example: BTU input} = \frac{\text{54 GPH X 60°F X 8.33 lb.}}{.75} = \text{35,985 BTU}$$

[1] *The average temperature of tap water varies throughout the state depending upon the location, elevation and time of year.* ***In San Diego County, the average water temperature***

***of tap water is assumed to be 60°F. Therefore, to achieve a temperature of 120° F at the faucet, the required rise would be 60°F.***

[2] *The thermal efficiency for commercial gas water heaters, unless otherwise listed by NSF or other nationally recognized testing laboratories, will be assumed to be 75%.*

**Formula 2** (for electric water heaters)

$$\text{KW input} = \frac{\text{GPH X °Rise X 8.33 lb. / gallon of water}}{\text{Thermal Efficiency}^{1}\text{ X 3412 BTU/KW}}$$

$$\text{Example: KW input} = \frac{\text{54 GPH X 60°F X 8.33 lb.}}{\text{.98 X 3412 BTU/KW}} = \text{8.1 KW}$$

[1] *The thermal efficiency for commercial electric water heaters, unless otherwise listed by NSF or other nationally recognized testing laboratories, will be assumed to be 98%.*

- Electric, instantaneous water heaters or insta-hot water heaters **ARE NOT** approved as the food facilities primary hot water generation system. Point-of-use electric instantaneous electric water heaters may be approved on a case by case basis for non-prep area fixtures only.

b. **Sizing Requirements for Gas Fired Tankless Water Heaters-**
Tankless water heaters including boilers, must be sized to provide hot water of at least 120°F, at a rate of at least 2 gallons per minute (GPM), to most sink and fixtures that utilizes hot water. Hand lavatories and single prep sinks must receive at least 1/2 GPM each.

- Warewashers and other high water load equipment (clothes washers, etc.) will be determined at a rate of 2 GPM minimum or higher based on the manufacturer's specifications.
- As a result of the restricted output of instantaneous water heaters, more than one unit may be required, depending on the numbers and types of sinks and equipment present.
- The following example is provided to explain how this sizing criteria is applied.

Assume:

| | | |
|---|---|---|
| 1 | 18" X 18" three compartment sink | 2 GPM |
| 2 | Hand lavatories | 1 GPM (1/2 GPM each) |
| 1 | Janitorial sink | 2 GPM |
| | | --- |
| | | 5 GPM |

In the example given above, one or more instantaneous water heaters would have to be provided in order to supply a total of at least 5 GPM.

c. **Requirements for Booster Heaters-** When a hot water sanitizing warewashing machine is used, a booster heater must be provided that will raise the incoming general purpose hot water up to at least 180° F for the final sanitizing rinse cycle.

- When sizing a booster heater, the hot water demand for the warewashing final sanitizing rinse cycle should be obtained from the NSF International listings or listings established by other nationally recognized testing laboratories.

- The formulas for calculating BTU or KW input listed above should be used when determining the minimum required size for a booster heater.

- When a booster heater is installed below a drainboard, it shall be installed at 6 inches above the floor and away from the wall, and in a manner that will allow accessibility for proper cleaning and servicing.

d. **Recirculation Pumps-** Where fixtures are located <u>more than 60 feet</u> from the water heater, a recirculation pump must be installed, in order to ensure that water reaches all of the fixtures at a temperature of at least 120°F. In some cases, it may be more practical to install a separate, smaller water heater for remote fixtures, such as for restroom handsinks.

e. **Installation Requirements-** Where feasible, water heaters should be located in an area of the food facility separated from all food and utensil handling areas. The Uniform Building Code prohibits the installation of gas water heaters in restrooms or change rooms.

- Water heater shall be mounted in one of the following methods: 6 inch high metal legs, a 4 inch coved platform, a wall pedestal, or in an easily accessible suspended ceiling with an access ladder.

- When multiple water heaters are connected, they must be installed in parallel, not in series.

f. **Common Installation Mistakes-** A common mistake with electric water heaters is the ordering and installing of a water heater with an upper element of 4500 watts, a bottom element of 4500 watts, and a total connected (or maximum) wattage of 4500 watts. On such a water heater, only one element is operating at any one time. Many individuals do not observe the total connected wattage and assume that because each of the elements is 4500 watts, their water heater has an input rating of 9000 watts.

- Water heater manufacturers have specific procedures for rewiring an electric water heater so that the upper and lower elements are operating simultaneously. Some manufacturers only permit rewiring in the factory.

Field modifications will normally void warranties and any listings that the unit comes with. Prior to acceptance of a field modified water heater, the local health agency should ensure that the modifications were performed according to the manufacturer's recommendations and with the approval of the local building officials. The data plate on a field modified water heater must be changed to reflect the total connected wattage rating with both elements operating simultaneously.

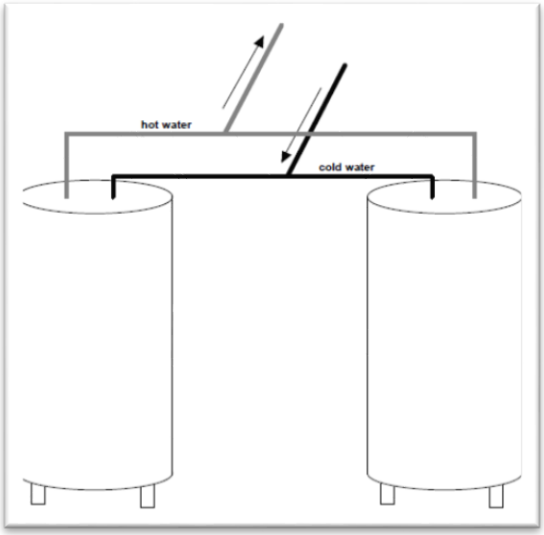


**Fig. 7 Water Heater Installed in Parallel**

3. **Liquid Waste Disposal-** Liquid waste shall be disposed of through an approved plumbing system and shall discharge into the public sewerage or into an approved private sewage disposal system.

   - **Indirect Waste-** All condensate and liquid waste from ice machines and bins, food preparation sinks, and equipment, warewashing sinks, "wet" steam tables, dipper wells, beverage dispensers, refrigeration condensers and other similar equipment with drain lines, shall discharge their liquid waste by means of indirect waste pipes to a floor sink. A mop sink may be used to catch water heater wastewater. <u>Condensate from HVAC or waste discharged by Backflow Preventers may not drain to the mop sink</u>.

Fig. 8 Indirect Drainage of Waste to a Floor sink

a. **Floor Sinks-** Floor sinks are the plumbing fixtures required for the receipt and disposal of liquid waste. Careful planning is needed to ensure the proper placement of all required floor sink installations, so that equipment generating a liquid waste is properly drained.

- Floor sinks are to be installed flush with the floor surface and have an appropriate cover grate(s).

- Floor sinks must be installed so that they are readily accessible for inspection, cleaning and maintenance. A protective enclosure will be required around the back side of half-exposed floor sinks installed under curb or base mounted equipment to prevent any wastewater back flow under the equipment.

- The floor sink must be located to ensure that the condensate or waste has at minimum ¼" per foot slope for the drainage plumbing. Typically, floor sinks for ice machines must be located immediately adjacent to the ice machine.

- Waste-line plumbing that drains to the floor sink must be located at least 3/4 inch from the wall and 6 inches off the floor. The piping is to terminate above the overflow rim of the floor sink and provide an air break.

- Waste-line plumbing to a floor sink may not cross any aisle way, traffic area or door opening.

b. **Floor Drains-** Floor drains or trough drains are required in high moisture areas such as scullery, janitorial rooms with mop sinks, restrooms, in front of corn cooking tanks, tilted kettles or clean in place equipment, and wherever there are areas cleaned by water flushing or where products are iced down. The entire floor surface must be sloped to the floor drains approximately ⅛ inch per foot or 4 foot diameter depression that slopes approximately ¼ inch per foot.

4. **Backflow Prevention-** An approved backflow prevention device shall be properly installed upstream of any potential hazard between the potable water source system and a source of contamination (e.g., all threaded water outlets, mop sinks, sprayers, warewashers, etc.). Refer to the Appendix for more information on backflow devices.

   - Common equipment and their respective backflow prevention device or assembly include, but is not limited to:

     a. Carbonated beverage systems: **Reduced Pressure Backflow Preventer**

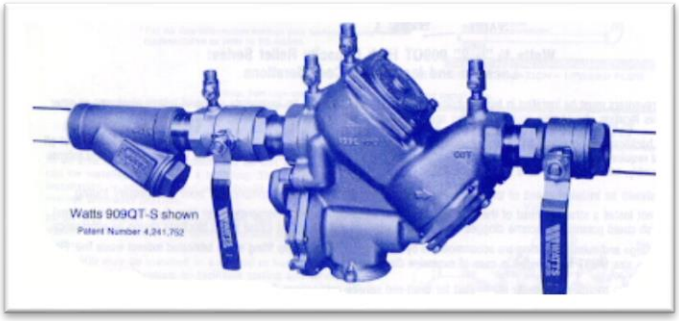


     b. Non-carbonated beverage dispensing systems, including espresso machines: **Vented Dual Check Valves**

     c. Rethermalizers: **Pressure Vacuum Breakers**

     d. Warewashing Machines: **Atmospheric Vacuum Breakers**

e. A reservoir or water supplied to a produce fogger or misting system shall also be constructed with a backflow prevention device.

5. **Grease Traps/Interceptors-** In order to prevent blockage of the sewer system due to accumulated grease and oils discharged from a food facility, many wastewater treatment agencies are requiring the installation of grease traps or interceptors. Refer to the Appendix for more information on grease traps.

- Check with the Local Wastewater Treatment Agency to see what size grease trap or interceptor is required. Once the requirements have been established, design the waste plumbing system to accommodate the required device.

  a. **Grease Interceptors-** Grease interceptors (large volume tank) are to be installed outside of the food facility. These large volume tanks are installed in the ground.

  b. **Grease Traps-** Grease traps (small volume tank) shall be installed outside kitchen, food prep and food storage area or any work area with the exception of rooms dedicated to trash or janitorial services outside the food activity area. The grease trap is to be placed outside the footprint of the building where possible. The grease trap location must also minimize the exposure of food prep, food storage and warewashing areas to grease waste when emptying the grease trap or interceptor.

6. **Garbage Disposals-** Garbage disposals, if proposed, must be installed in drainboards of subject sinks or dedicated garbage disposal sinks. A minimum of 18 inches of drainboard space is required between the sink compartment and the disposal unit. The garbage disposal is to drain indirectly to a floor sink. Some municipalities prohibit the installation of garbage disposals. Check with your local building department.

7. **Automatic Warewasher/Glass washers-** The food facility operator may choose to use an automatic glass or warewashing machinery in their operation in addition to the required 3-compartment kitchen utensil sink.

- NSF must list all automatic warewashers, pan washers, and glass washers in the latest issue of NSF/ANSI Standard 3. Devices not listed in NSF/ANSI Standard 3 may not be used in public food facilities.

    a. **High Temperature Warewasher-** All spray type warewashers, pan washers and glass washers which are designed for a hot water bactericidal rinse (high temp) are required to be provided with a booster heater that meets the requirements of NSF/ANSI Standard 5 or be connected to an approved hot water recirculating system which is capable of maintaining the rinse water at not less than 180°F. These types of warewashers will require the installation of an approved exhaust hood to remove steam, heat and vapors generated by the warewashing machine.

    b. **Chemical Warewasher-** Low temperature warewashing machines are to be provided with a visual or audible warning device to warn the operator when the sanitizing agent is depleted. Sanitizing testing equipment and materials must be provided to adequately measure the applicable chemical sanitizer at the warewasher/glass washer.

    c. **Drainboards-** Warewashers, pan washers, and glass washers are required to have 2 integral stainless steel drainboards at least 24 inches or large enough to accommodate the soiled dish rack(s) and clean dish rack(s). Drainboards for under counter warewashers must either be nearby to the machine or they can also share the drainboards with an adjacent 3-compartment sink. The top of the warewashing machine is not considered as drainboard space. The soil side drainboard shall slope to the disposal cone, rack sink, or quick drain. The soiled dish drainboard shall not be sloped to drain into the warewashing machine. The 24 inch drainboard space is required in addition to the space occupied by the waste receptacle.

    d. **Installation-** The warewasher must also be provided with thermometers and pressure gauges to indicate the proper water flow pressures and temperatures. All waste from warewashers, pan washers, and glass washers are required to drain to an adjacent floor sink via legal air gap. Undercounter-type automatic warewashers need to be placed on a 4 inch curb, 6 inch platform or on commercial casters.

8. **Laundry facilities** within a food facility shall not be used for washing and drying items that are not used in the operation of the establishment.

# Ventilation

All areas of a food facility shall have sufficient ventilation to facilitate proper food storage and to provide a reasonable condition of comfort for each employee consistent with the job performed by the employee. **Complete mechanical plans must be submitted with the plans to include ventilation hoods (if applicable). See the Appendix for more information on ventilation and hoods.**

- Toilet rooms and janitorial rooms shall be vented to the outside air by means of an openable screened window, an air shaft or a light switch activated exhaust fan, consistent with the requirements of local building codes. Ductless fans are not approved for ventilation use.

- Heating, ventilating and air conditioning systems in food preparation and warewashing areas shall be designed and installed so that make-up air intake and exhaust vents do not cause contamination of food, food-contact surfaces, equipment, or utensils, and do not create air currents that cause difficulty in maintaining the required temperatures of potentially hazardous foods.

- Fans, including ceiling fans, are not allowed in food processing areas due to cleaning issues of the parts and pieces of the fans, potential for cross-contamination and interference with the exhaust systems over the cooking equipment.

1. **Exhaust Hoods and Ducts-** A hood-exhaust system is required in your food facility to remove the by-products (e.g., smoke, steam, grease, vapors and heat) of cooking. While the aroma of cooking food is enticing to your customers, insufficient removal of the by-products leads to cleanability problems when the vapors, smoke, and grease accumulate on your equipment, the floors, walls and ceilings.

    - Mechanical exhaust ventilation system equipment is required for all the following, but is not limited to: ranges, griddles, ovens, deep fat fryers, barbecues, rotisseries, charbroilers, and high temperature warewashing machines. The cooking operation, as well as, the type of equipment used will determine the type of Exhaust Hood System required for your facility.

    - All hoods, ducts and exhaust outlets are required to be installed in accordance with the current edition of the Uniform Mechanical Code Chapter on Commercial Kitchen Ventilation Systems as adopted by the local building inspection departments.

    - Ventilation plans for each system shall include front and side elevations of the exhaust hood and duct details to the roof fans (both exhaust and make-up air).

Provide manufacturer specification sheets for exhaust fan, make-up air fan, and hood filters along with the static pressure calculations. Complete and submit as part of the plan submittal package.

- All exhaust systems are required to have a mechanical make-up air system that replaces from 80% to 100% of the exhaust air in the kitchen area where the air is exhausted. Windows, doors or other openings into the facility cannot be used for the purposes of providing make-up air. A separate fan system providing air into the building is required. The make-up air control switch is required to be interlocked with the exhaust air system switch, so that both systems are functioning at the same time. Contact local development services and Fire Departments for fire safety requirements regarding this makeup air and exhaust ventilation system electrical interlock.

- For kitchens with multiple hoods, an air balance report will be required at the time of final inspection prior to final approval to operate.

- Food heating or warming devices such as cheese-melters, salamanders, plate warmers, etc., are not approved to be placed above high temperature equipment or fryers. Disturbance to the airflow may result with inefficient exhausting of cooking by-products.

- Fire extinguishing systems may be required by the local fire prevention codes. When fire suppression systems are installed, they must be installed so that all exposed components under the hood are easy to clean and accessible for cleaning.

    a. **Type I Hood-** A Type I ventilation hood is a kitchen hood that collects and removes grease and smoke with filters or grease extractors that are designed for that specific purpose. High temperature equipment such as charbroilers, tandoori ovens, etc., will require a hood rated to a minimum of 600°F. Solid fuel equipment will require a separate ventilation hood that is rated to 700°F and has spark arrestors.

    b. **Type II Hood-** A Type II hood is a general kitchen hood for collecting and removing steam, vapors, heat or odors. A Type II hood is not approved for use with any grease producing equipment.

    c. **Recirculating Hood System (Ventless Hood System) -** Recirculating hood systems capture the effluent air generated from a cooking appliance, "clean it" using grease and charcoal filters or electrostatic precipitators (ESP), and then deliver the filtered, processed air back into the conditioned space. Recirculating systems are specifically designed to remove grease, smoke and odor. A few systems remove moisture-laden air. Check with the local building

and fire enforcement agencies for approval and any additional requirements for installation of these systems.

A Ventless hood exemption letter must be submitted when a Ventless hood is proposed. Additionally, 450 CFM of additional air must be provided in the kitchen per each heating and cooking appliance to adequately cool the cooking area. The cooking equipment and exhaust system must be interlocked so that the cooking equipment will not operate when the hood is off or operating at less than 85% efficiency.

d. **Cooking Equipment Exempt from Mechanical Ventilation-** An exemption from mechanical ventilation may be considered for the cooking equipment meeting the following requirements and an exemption letter submitted to this department (2 pieces maximum):

- **A <u>single piece</u> of equipment (e.g., ovens, Panini grill, waffle iron, etc.) weighing 80 pounds or less, isolated from a cook line, and that does not produce grease, soot, or vapors per EPA Test Method 202, as verified by a recognized third party testing agency.**

- Some electric equipment with a maximum temperature of 250°F (thermostatically controlled).

- Electric convection ovens (12 kilowatts or less) used for baking bread only.

*NOTE: Any piece of equipment causing sanitation or other problems will require proper mechanical ventilation. Building or Fire Departments may still require mechanical ventilation.*

e. **Outdoor Barbeque/Wood-Burning Oven-** Outdoor barbeques and wood burning ovens are approved provided they meet all of the following requirements as stated in the California Retail Food Code section 114143:

- The open-air barbecue or outdoor wood-burning oven is operated on the same premises as, in reasonable proximity to, and in conjunction with, a permanent food facility that is approved for food preparation. All food preparation must be conducted inside the permanent, fully-enclosed food facility.

- The open-air barbecue or outdoor wood-burning oven is separated from public access to prevent food contamination or injury to the public by using ropes or other approved methods.

- If the open-air barbecue or outdoor wood-burning oven is a permanent structure, it shall be equipped with an impervious and easily cleanable floor surface that extends a minimum of five feet from the open-air barbecue or outdoor wood-burning oven facility on all open sides. See the Appendix for more information on Open Air Barbeques.

# Electrical/Lighting

The facility must have sufficient electrical and lighting requirements for the equipment installed and the menu provided. **Ensure electrical plans and lighting information are documented on the plans.**

- **Electrical-** Adequate electrical power must be provided at all times to operate exhaust, lighting, equipment and refrigeration.

- **Lighting-** Adequate levels of light are required in the food preparation, food and equipment storage and scullery areas. Food service workers need to be able to clearly see the items that they are preparing for the customers in order to ensure freshness and wholesomeness of the food. During times of cleanup and maintenance, adequate lighting is necessary to assist in determining where cleanup efforts are needed and to ensure the adequacy of cleanup operations.

  a. A minimum of 10 foot-candles (110 lux) of light measured 30 inches above the floor is necessary in the following areas: all refrigeration units including walk-ins, food storage areas, where alcoholic beverages are prepared, and where utensils are cleaned for use with alcoholic beverages.

  b. A minimum of 20 foot-candles (220 lux) of light, measured 30 inches above the floor is necessary in the following areas: food preparation, consumer self-service, where fresh produce or prepackaged foods are sold, handwashing, warewashing, equipment/utensil storage, and restrooms.

  c. During times of cleanup, all areas are to have a minimum of 20 foot-candles of light.

  d. A minimum of 50 foot-candles (540 lux) of light is required at a surface where a food employee is working with food or working with utensils and equipment such as knives, slicers, grinders, or saws where employee safety is a factor.

  e. Light fixtures installed over areas where food is prepared, open food is stored and where utensils are washed need to be of shatterproof construction or equipped with approved shatter containment shields.

# Food and Beverage Storage

A suitable amount of space within the facility needs to be dedicated for food storage, beverages and related products. Storage is classified into three types of storage: retail storage, working storage and back-up storage. **All food and beverage storage racks must be clearly identified on the equipment plan and schedule including the size and number of tiers.**

1. **Retail Storage-** Retail storage is the shelving on the store floor where the items for sale are placed and are accessible to customers.

   - Outdoor display storage must have overhead protection and only be used for prepackaged non-potentially hazardous items or uncut produce.

2. **Working Storage-** Working storage is storage space located over and under food handling equipment used in conjunction with food preparation areas. The location of the working storage shelving should be located in the scullery and prep areas.

3. **Back-Up Dry Storage- 96 linear feet minimum** of approved shelving units are required for back-up dry storage space. Additional storage shelving may be required depending on the size and type of operation. The dry storage area should be located adjacent to the food preparation areas. For larger facilities, the storage footage is based on 25% of the floor space of the kitchen, storage and food preparation areas. EXAMPLE: Combined floor space of kitchen, storage and food preparation areas is 1000 square feet. 25% of 1000 square feet is 250 feet. This facility would need 250 feet of storage space. Shelving located over work areas or sinks is not included in the 96 linear feet total.

   - The lineal footage of storage shelving is calculated by multiplying the number of tiers by the number of feet in length of each shelf. A minimum of 18 inches is required for the width of each shelf. The minimum 18 inches width, however, is only a standard for width and is not used in calculating lineal footage. For example a 5 tier shelving rack whose shelves are 5 feet in length and 18 inches in width, would amount to 25 linear feet. These shelves should be arranged into a metro-type shelving unit.

   - Shelving needs to be designed and constructed so that it is easy to clean. Shelving constructed of pressboard, pressed wood or plywood is not acceptable unless laminated with a smooth, durable material on all sides and edges. Shelving located over sinks and other wet areas must be constructed of metal.

   - Shelves installed on a wall are to have a minimum 1 inch gap or open space between the back edge of the shelf and the wall surface. The back edge of the shelves can also be sealed to the wall with an approved sealant, such as silicone or equivalent instead.

- The highest shelf should be a maximum of 7 feet and have a minimum of 15 inches between shelves.

- The lowest shelf must be constructed at least 6 inches above the floor surface with the space under the shelf clear and unobstructed for cleaning underneath. If the space below the bottom shelf is less than 6 inches, then the opening must be sealed with a continuous cove base. If the space below is not to be accessible, then the opening is to be sealed off a continuous cove base. The continuous cove base should be a minimum of 4 inches with a ⅜ inch radius in food storage areas for open and working food containers.

- Food storage cannot be located in locker rooms, restrooms, dressing rooms, refuse room, mechanical rooms, under unshielded sewer lines, under leaking water lines including condensation, open stairwells and all other sources of contamination. Food storage must be located inside a fully enclosed facility.

- To prevent contamination from a work surface above storage shelves, shelving located below a working surface must be set back at least 2 inches from the drip line of the working surface above.

- If shelving is mounted on legs, the legs are to be at least 6 inches in height and constructed of metal meeting NSF requirements for metal legs.

- Electrical panels, large fire prevention system control components, or similar wall-mounted apparatus shall not be placed in a food storage room unless adequate provisions are made to compensate for the loss of storage space caused by the placement of the apparatus. Storage shelving is not to be placed where access to this equipment is impeded.

- Storage space for bars and taverns shall consist of a separate room with 48 linear feet of approved storage shelving. Depending on the size of the operation, additional storage may be required. When a bar is located in a restaurant, the back-up storage requirement for the bar must be included in addition to the required dry food storage footage for the restaurant.

- Each separate food department of a grocery store which handles unpackaged foods (e.g., deli, meat, bakery, etc.) must provide at least 48 linear feet of its own dedicated dry storage.

- For produce departments of grocery markets or produce stores selling produce only, a segregated room of at least 50 square feet of floor surface shall be dedicated for back up storage of food and packaging supplies or at least 48 lineal feet of approved shelving are required. Additional shelving may be required depending on the size and scope of the operation.

# Non-Food Areas

The non-food areas in the food facility, including the employee and patron restrooms, change rooms, office, janitorial and trash areas are still important pieces in a successful restaurant design. **The site plan must identify all of the non-food areas.**

1. **Restrooms-** Properly designed, adequate, accessible and well-maintained toilet rooms must be provided for employees of the food facility.

   - Food facilities are required to have at least one restroom accessible to employees and patrons when there is onsite consumption of food. ***Exemption-*** *If the facility was built before January 1, 2004 and there is consumption of food onsite, a restroom will not have to be provided to patrons if a sign is prominently posted that "Toilet Facilities are not Provided."*

   - A minimum of one men's and one women's restrooms are required for facilities larger than 20,000 square feet for use by patrons that are readily accessible from the retail area.

   - Toilet facilities are to be located so that patrons do not pass through the food preparation, food storage or utensil washing areas when they need to access the toilet facilities.

   - Handwashing lavatories shall be provided within each toilet room. The lavatory shall be provided with water that is 100-108°F from a mixing type faucet for a minimum of 15 seconds uninterrupted. The lavatory shall be connected and wastewater dispensed to the sanitary sewer system.

   - Soap and single service paper towels shall be dispensed from permanently affixed dispensers mounted on the nearest wall or partition adjacent to the handsink. A hand dryer is an approved substitute for paper towels in a dispenser. Toilet paper dispensers shall be provided for each toilet.

   - Toilet room doors shall be self-closing and tight fitting with 1 inch air gap.

   - All toilet rooms shall be provided with ventilation meeting the requirements of the Uniform Mechanical Code and/or Uniform Building Code. Mechanical ventilation is preferred; however, ventilation of a toilet room is considered adequate with an openable, screened window.

   - Contact your local building department for specific requirements for Americans with Disabilities Act (ADA) prior to designing the toilet rooms and the number of required restrooms before submitting plans to this department for review.

   - "Common Use" restrooms may be considered for a food facility if they are located within **200 feet** walking distance from the food facility and must be under the

control of a single management entity that has control over all of the common areas within the boundaries, including the common restroom facilities. There must be an on-site management office. Restroom must be constructed and maintained to DEH standards. Submit a letter from the operator of the common use restroom allowing use and a letter from operator that they will maintain the restroom to health department standards.

2. **Employee Areas-** Employee areas are portions of the facility that are for employee storage, eating and dressing rooms. Food storage and preparation is not approved in these areas.

    a. **Dressing Rooms-** Dressing rooms must be provided if employees change into uniform and store clothing, including outer garments.

        - In situations where there are 10 or more employees per shift, a separate change room for each sex is required OR a change room and an employee restroom are allowed. These change rooms are to be separate from bathrooms, food storage areas and food preparation areas.

        - Once the change room or designated area is established, it cannot be used for other purposes such as an office, food storage, etc.

    b. **Lockers-** Lockers or cabinets are required for employees to store their belongings that are separate from the restroom, office, food storage, food preparation or scullery. There must be an adequate number of lockers for all the employees on shift.

    c. **Employee Eating Area-** There must be an area designated for employees to eat and drink that is separate from restroom, office, food storage, food preparation, or scullery.

    d. **Offices-** Manager's or chef's offices are not approved for the storage of food or beverages, and shall not be used as a change room.

3. **Janitorial Area-** Janitorial areas with a floor mounted mop sink are required in most food facilities. They also must have a location for the storage of chemicals, mops, and brooms.

4. **Trash-** There must be locations for trash disposal located in the customer area, in each area where trash is generated and an area for storage of trash, recyclables, and other waste materials (grease).

    a. **Inside Trash Area-** Trash storage areas must have water resistant walls, smooth and easily cleanable ceiling non-absorbent floor and non-absorbent ⅜ inch radius cove base. The floor must slope ¼ inch per foot to a floor drain. A hose bibb with approved backflow protection must be provided in the room.

b. **Outside Trash Area-** Outside trash areas must be located on a concrete slab. If the trash area is enclosed, the interior walls must be smooth, sealed, and washable (example painted plaster). If slats are used, only metal or plastic is approved.

c. **Trash Chute-** If the facility has a trash chute, the walls within 3 feet of the chute must be smooth, sealed and washable.

5. **Culinary Garden-** If a food facility intends to grow their own produce, either at the site of the restaurant or at another location owned by the restaurant, the operator must adhere to all the requirements for "Culinary Garden Food Source for a Regulated Food Facility Guide" and submit the Culinary Garden application with the plans. Clearly show on the plans the space designated to be a culinary garden.

6. **Incidental Food Sales-** A facility that has up to 25 square feet of storage shelving, including back stock, of prepackaged non-potentially hazardous food only, does not require plan submission or permitting with this department. Facilities that have 26-300 square feet of storage shelving for prepackaged non-potentially hazardous foods only are required to have a health permit; however are subject to limited plan check requirements. Any open food/beverage preparation or potentially hazardous food will require Plan Check Approval and the facility to obtain a health permit prior to the start of operation.

# Grease Trap Requirements

Contact numbers for grease trap requirements in the cities within the County of San Diego

| | |
|---|---|
| County of San Diego(PDS) | (858) 694-3767 |
| Carlsbad | (760) 602-2719 |
| Chula Vista | (619) 591-5272 |
| Coronado | (619) 522-7387 |
| Del Mar | (858) 720-4450 |
| El Cajon | (619) 441-1741 |
| Encinitas | (760) 633-2730 |
| Escondido | (760) 839-6372 |
| Imperial Beach | (619) 423-8300 |
| La Mesa | (619) 667-1154 |
| Lemon Grove | (619) 825-3805 |
| National City | (619) 336-4214 |
| Oceanside | (760) 435-5800 |
| Poway | (858) 668-4700 |
| San Diego | (858) 654-4188 |
| San Marcos | (760) 744-1050 ext 3203 |
| Santee | (619) 258-4100 ext 154 |
| Solana Beach | (858) 720-4450 |
| Vista | (760) 726-1340 ext 1356 |

The City of San Diego Metropolitan Wastewater Department

# Food Establishment Wastewater Discharge (FEWD) Permit Program

9150 Topaz Way, M.S. 902
San Diego, California 92123 – 1119
(858) 654-4188 Fax (858) 654-4195
BY APPOINTMENT ONLY

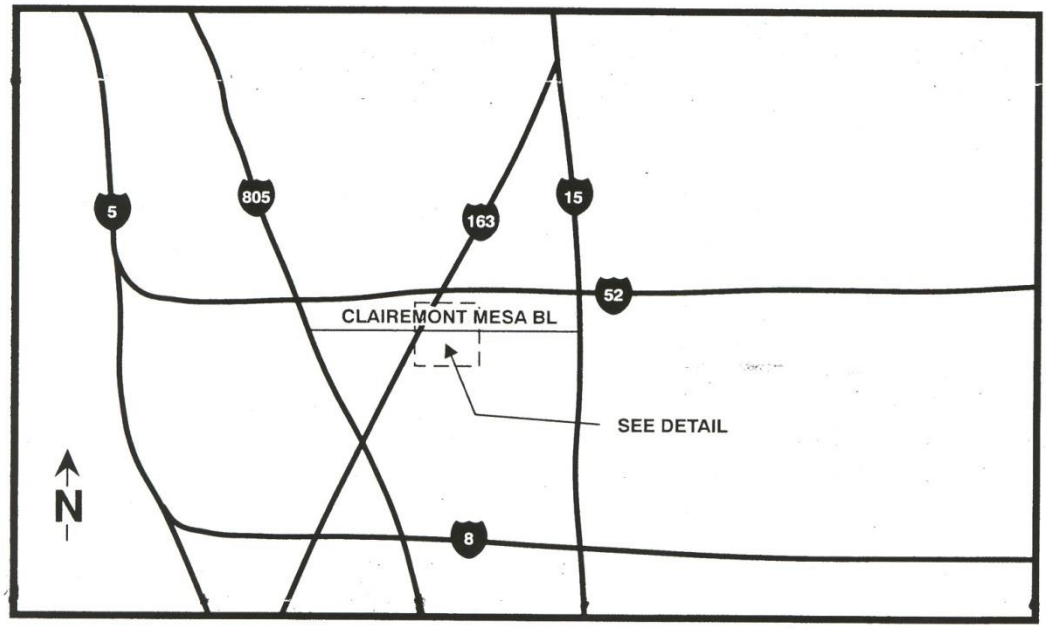


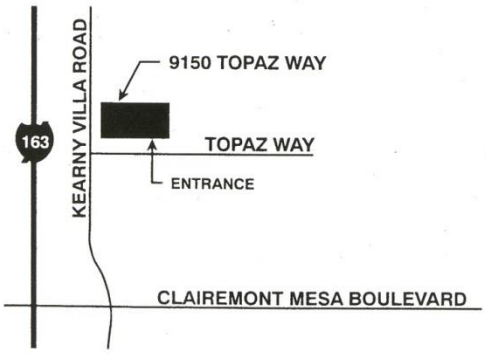


*This information is available in alternative formats upon request.*

MW-115 (1-2000)

Printed on Recycled Paper