# County of San Diego Cedar and Kettner Development Project
# PARKING STRUCTURE
## SAN DIEGO, CA

## PARKING SUMMARY

S = 8'-6"X18'-0" Ø = 90° Bldg. Size: 124'-1" X 202'-0"

| AREA | ON-GRADE SLAB (S.F.) | ELEVATED SLAB (S.F.) | NUMBER OF SPACES: VAN ACCESSIBLE | ACCESSIBLE | 8' - 6" | | | TOTAL | S.F./SPACE |
|---|---|---|---|---|---|---|---|---|---|
| B3A | 11,691 | | | | 32 | | | 32 | 365.34 |
| B3B | 3,996 | | | | 11 | | | 11 | 363.27 |
| B2A | | 11,692 | | | 32 | | | 32 | 365.38 |
| B2B | 8,146 | 3,996 | | | 35 | | | 35 | 346.91 |
| B1A | | 11,692 | 1 | 3 | 26 | | | 30 | 389.73 |
| B1B | | 12,091 | | | 35 | | | 35 | 345.46 |
| P1A | | 10,936 | 2 | 4 | 24 | | | 30 | 364.53 |
| P1B | | 11,079 | | 2 | 26 | | | 28 | 395.68 |
| P2A | | 10,936 | | | 32 | | | 32 | 341.75 |
| P2B | | 11,079 | 1 | | 28 | | | 29 | 382.03 |
| P3A | | 10,936 | | | 33 | | | 33 | 331.39 |
| P3B | | 11,079 | | | 35 | | | 35 | 316.54 |
| P4A | | 10,936 | | | 33 | | | 33 | 331.39 |
| P4B | | 11,079 | | | 35 | | | 35 | 316.54 |
| P5A | | 10,936 | | | 33 | | | 33 | 331.39 |
| P5B | | 11,079 | | | 35 | | | 35 | 316.54 |
| P6A | | 10,936 | | | 33 | | | 33 | 331.39 |
| P6B | | 11,079 | | | 35 | | | 35 | 316.54 |
| P7A | | 10,936 | | | 35 | | | 35 | 312.46 |
| P7B | | 11,079 | | | 36 | | | 36 | 307.75 |
| P8B | | 3,882 | | | 11 | | | 11 | 352.91 |
| | 23,833 | 197,458 | | | | | | | |
| | | 23,833 | | | | | | | |
| | | 221,291 | | | | | | | |
| Gross Floor Area (SF) | | | | | | | | | |
| Total Number Spaces | | | 4 | 9 | 635 | 0 | 0 | 648 | |
| Gross Floor Area (SF) | | 221,291 | + | 648 | | | = | | 341.50 |
| Design Efficiency: | | | | | | | | | |

Notes: Square footage is approximate and should be verified before re-use.

## OPEN AIR VENTILATION SUMMARY

**CBC SECTION 406.3.3.1**

P7 (ROOF) LEVEL: OPEN TO SKY, VENTILATION NOT REQUIRED

**P6**

| ELEVATION | LIN. FOOT WALL | REQ'D LIN. FT. OPG.(40%) | PROVIDED LIN. FT. OPG. | WALL AREA | REQ'D WALL OPG. (20%) | PROVIDED OPENING | COMMENT |
|---|---|---|---|---|---|---|---|
| NORTH | 123.75 | 49.50 | **98.17** | 1247.81 | 249.56 | **693.00** | OPEN |
| SOUTH | 123.75 | 49.50 | **0.00** | 1267.00 | 253.40 | **0.00** | OPEN |
| WEST | 185.00 | 74.00 | **140.33** | 1865.00 | 373.00 | **937.00** | OPEN |
| EAST | 185.00 | 74.00 | **37.30** | 1510.00 | 382.00 | **182.00** | OPEN |
| **TOTAL:** | 617.50 | 247.00 | **275.50** | 6289.81 | 1257.96 | **1812.00** | OPEN |

**P5**

| ELEVATION | LIN. FOOT WALL | REQ'D LIN. FT. OPG.(40%) | PROVIDED LIN. FT. OPG. | WALL AREA | REQ'D WALL OPG. (20%) | PROVIDED OPENING | COMMENT |
|---|---|---|---|---|---|---|---|
| NORTH | 123.75 | 49.50 | **106.83** | 1247.81 | 249.56 | **693.00** | OPEN |
| SOUTH | 123.75 | 49.50 | **0.00** | 1267.00 | 253.40 | **0.00** | OPEN |
| WEST | 185.00 | 74.00 | **140.33** | 1865.00 | 373.00 | **937.00** | OPEN |
| EAST | 185.00 | 74.00 | **37.30** | 1510.00 | 382.00 | **182.00** | OPEN |
| **TOTAL:** | 617.50 | 247.00 | **284.16** | 6289.81 | 1257.96 | **1812.00** | OPEN |

**P4**

| ELEVATION | LIN. FOOT WALL | REQ'D LIN. FT. OPG.(40%) | PROVIDED LIN. FT. OPG. | WALL AREA | REQ'D WALL OPG. (20%) | PROVIDED OPENING | COMMENT |
|---|---|---|---|---|---|---|---|
| NORTH | 123.75 | 49.50 | **106.83** | 1247.81 | 249.56 | **693.00** | OPEN |
| SOUTH | 123.75 | 49.50 | **0.00** | 1267.00 | 253.40 | **0.00** | OPEN |
| WEST | 185.00 | 74.00 | **140.33** | 1865.00 | 373.00 | **937.00** | OPEN |
| EAST | 185.00 | 74.00 | **37.30** | 1510.00 | 382.00 | **182.00** | OPEN |
| **TOTAL:** | 617.50 | 247.00 | **284.16** | 6289.81 | 1257.96 | **1812.00** | OPEN |

**P3**

| ELEVATION | LIN. FOOT WALL | REQ'D LIN. FT. OPG.(40%) | PROVIDED LIN. FT. OPG. | WALL AREA | REQ'D WALL OPG. (20%) | PROVIDED OPENING | COMMENT |
|---|---|---|---|---|---|---|---|
| NORTH | 123.75 | 49.50 | **106.83** | 1247.81 | 249.56 | **693.00** | OPEN |
| SOUTH | 123.75 | 49.50 | **0.00** | 1267.00 | 253.40 | **0.00** | OPEN |
| WEST | 185.00 | 74.00 | **140.33** | 1865.00 | 373.00 | **937.00** | OPEN |
| EAST | 185.00 | 74.00 | **37.30** | 1510.00 | 382.00 | **182.00** | OPEN |
| **TOTAL:** | 617.50 | 247.00 | **284.16** | 6289.81 | 1257.96 | **1812.00** | OPEN |

**P2**

| ELEVATION | LIN. FOOT WALL | REQ'D LIN. FT. OPG.(40%) | PROVIDED LIN. FT. OPG. | WALL AREA | REQ'D WALL OPG. (20%) | PROVIDED OPENING | COMMENT |
|---|---|---|---|---|---|---|---|
| NORTH | 123.75 | 49.50 | **92.56** | 1247.81 | 249.56 | **693.00** | OPEN |
| SOUTH | 123.75 | 49.50 | **0.00** | 1267.00 | 253.40 | **0.00** | OPEN |
| WEST | 185.00 | 74.00 | **130.00** | 1865.00 | 373.00 | **889.00** | OPEN |
| EAST | 185.00 | 74.00 | **37.30** | 1510.00 | 382.00 | **182.00** | OPEN |
| **TOTAL:** | 617.50 | 247.00 | **259.66** | 6289.81 | 1257.96 | **1764.00** | OPEN |

**P1**

| ELEVATION | LIN. FOOT WALL | REQ'D LIN. FT. OPG.(40%) | PROVIDED LIN. FT. OPG. | WALL AREA | REQ'D WALL OPG. (20%) | PROVIDED OPENING | COMMENT |
|---|---|---|---|---|---|---|---|
| NORTH | 123.75 | 49.50 | **92.33** | 1289.00 | 257.80 | **677.81** | OPEN |
| SOUTH | 123.75 | 49.50 | **25.50** | 1330.00 | 266.00 | **69.78** | OPEN |
| WEST | 185.00 | 74.00 | **126.00** | 1927.00 | 385.40 | **370.87** | OPEN |
| EAST | 185.00 | 74.00 | **27.30** | 1962.00 | 392.40 | **225.00** | OPEN |
| **TOTAL:** | 617.50 | 247.00 | **270.83** | 6508.00 | 1301.50 | **1343.46** | OPEN |

NOTES:

1. LEVEL P-1 CONTAINS SECURITY SCREEN THAT IS 58% OPEN. CALCULATIONS ABOVE INCLUDE A 42% AREA REDUCTION IN OPENING WHERE SCREENING IS LOCATED.

## GENERAL NOTES

1. ALL WORK SHALL CONFORM TO ALL PERTINENT CODES, REGULATIONS, LAWS AND ORDINANCES AS REQUIRED BY THE STATE OF CALIFORNIA BUILDING CODE 2010 EDITION (CBC) WITH AMENDMENTS. (TITLE 24, CALIFORNIA CODE OF REGULATIONS – CCR)

2. ALL PLAN DIMENSIONS INDICATED ARE TO COLUMN CENTERLINE, TO FACE OF CONCRETE, TO FACE OF MASONRY OR TO FACE OF STUDS UNLESS OTHERWISE NOTED.

3. FLOOR ELEVATIONS INDICATED ARE TO TOP OF STRUCTURAL OR GRADE SLAB UNLESS OTHERWISE NOTED.

4. CONTRACTOR SHALL BE RESPONSIBLE FOR VERIFYING ALL DIMENSIONS IN THE FIELD, AND IN THE EVENT OF DISCREPANCY, REPORTING SUCH DISCREPANCY TO THE ARCHITECT.

5. TEMPORARY FENCE AND CANOPY FOR THE PROTECTION OF PEDESTRIANS SHALL BE PROVIDED AS REQUIRED. COMPLY WITH 2010 CALIFORNIA FIRE CODE, ARTICLE 87 DURING ALL PHASES OF WORK.

6. ALL NEW OR REPLACED STREET PAVING, CURBS, GUTTERS, SIDEWALKS, SPEED BUMPS AND DRIVEWAYS IN PUBLIC WAYS SHALL BE CONSTRUCTED AS PER THE STANDARDS AND REQUIREMENTS OF THE GOVERNING JURISDICTION.

7. ALL EXIT DOORS AND GATES SHALL BE OPENABLE FROM THE INSIDE WITHOUT USE OF KEY OR SPECIAL KNOWLEDGE.

8. ALL TYPICAL PARKING SPACES SHALL BE DOUBLE STRIPED USING 4" WIDE PAINT LINES, RESULTING IN 7'-0" WIDE SPACES BETWEEN SINGLE STRIPES. SEE PLAN FOR VARYING PARKING SPACE SIZE.

9. THE VERTICAL DIMENSION FROM THE FINISH FLOOR TO THE UNDERSIDE OF ANY STRUCTURAL ELEMENT, PIPING, ELECTRICAL FIXTURE, ETC., SHALL BE 7'-0" MINIMUM. NO HORIZONTAL PIPING SHALL OCCUR BELOW THE BOTTOM OF BEAMS. 8'-2" CLEARANCE WILL BE REQUIRED WHERE ACCESSIBLE STALLS ARE PROVIDED. THIS WOULD INCLUDE ELEMENTS AND AREAS THAT PROVIDE ACCESS TO STALLS.

10. 6'-8" MINIMUM HEADROOM SHALL BE PROVIDED AT ALL EXIT STAIRS AND 7'-0" MINIMUM HEADROOM SHALL BE PROVIDED AT ALL LANDINGS.

11. ALL STAIR RAILINGS AND GUARDRAILS SHALL HAVE MAXIMUM DIVISION RAILS SPACING TO REJECT A 4" ø BALL. ALL GUARD RAILS SHALL BE 3'-7" HIGH. (3'-6" MIN. REQ.)

12. DECK COATING ON VEHICULAR TRAFFIC DECKS AT FLOOR AREAS OVER EQUIPMENT ROOMS, ELEVATOR EQUIPMENT ROOMS, STORAGE ROOM, ETC., SHALL CONSIST OF ELASTOMERIC OR EPOXY SYSTEMS. (MIN. 50 MILS. THK.) AND EXTENDING 6" BEYOND EXTERIOR FACE OF WALLS.

13. PROVIDE ONE 4A20BC FIRE EXTINGUISHER IN EACH FIRE HOSE CABINET AS SHOWN OR DIRECTED. FIRE EXTINGUISHER CABINET DOOR TO BE OF OBSCURE GLASS – BREAK-GLASS TYPE. AND ALSO PROVIDE 4A20BC FIRE EXTINGUISHERS AND FIRE EXTINGUISHER CABINETS AS SHOWN ON THE DRAWINGS AND AS MAY BE REQUIRED BY THE FIRE MARSHALL. (MINIMUM ONE FIRE EXTINGUISHER PER 6000 SQ. FT. AND MIN. SIZE TO BE 4A20BC.)

14. ALL VERTICAL PIPE RISERS SHALL BE HELD TIGHT TO FACE OF COLUMN OR WALL CLEAR OF LEGAL PARKING STALL. RISERS PASSING THROUGH SLAB SHALL HAVE A PIPE SLEEVE THAT EXTENDS 1" ABOVE FINISH FLOOR AND AT ROOF LEVEL TO BE SEALED WATERTIGHT. VERTICAL CODE REQUIRED CLEARANCES FOR EACH PIPE SIZE & TYPE.

15. ALL TOP OF FLOOR DRAINS/AREA DRAINS SHALL BE SET 1/2" BELOW ADJACENT FINISH FLOOR ELEVATION SHOWN.

16. ALL HORIZONTAL PIPING SHALL BE HELD TIGHT TO DECKS & PASS THROUGH BEAM SLEEVES. NO PIPING SHALL RUN BELOW BOTTOM OF THE BEAMS. COORDINATE SLEEVE LOCATIONS W/ STRUCTURAL DRAWINGS.

17. GRADING PLANS, DRAINAGE IMPROVEMENTS, ROAD AND ACCESS REQUIREMENTS AND ENVIRONMENTAL HEALTH REQUIREMENTS SHALL COMPLY WITH ALL LOCAL ORDINANCES.

18. INSTALLATION OF DEFERRED APPROVAL ITEMS SHALL NOT BE STARTED UNTIL CONTRACTOR'S DRAWINGS, SPECIFICATIONS AND ENGINEERING CALCULATIONS FOR THE ACTUAL SYSTEMS TO BE INSTALLED HAVE BEEN ACCEPTED AND SIGNED BY THE ARCHITECT AND STRUCTURAL ENGINEER AND APPROVED BY THE GOVERNING JURISDICTION.

19. CLASS 1 STANDPIPE HOSE CONNECTION SHALL BE PROVIDED IN EVERY REQUIRED STAIRWAY FOR EACH LEVEL ABOVE AND BELOW GRADE. (CFC 905.4)

20. EVERY BUILDING FOUR STORIES OR MORE IN HEIGHT SHALL BE PROVIDED WITH NOT LESS THAN ONE STANDPIPE FOR USE DURING CONSTRUCTION INSTALLED IN ACCORDANCE WITH CFC 1413.1. STANDPIPE SHALL BE INSTALLED WHEN THE PROGRESS OF CONSTRUCTION IS NOT MORE THAN 40 FEET IN HEIGHT ABOVE THE LOWEST LEVEL OF FIRE DEPARTMENT ACCESS.

21. ALL ELEVATORS SHALL COMPLY WITH ASME A17.1, SAFETY CODE FOR ELEVATORS AND ESCALATORS.

## GOVERNING CODES

2010 CALIFORNIA ADMINISTRATIVE CODE – TITLE 24, PART 1
2010 CALIFORNIA BUILDING CODE – TITLE 24, PART 2 WITH APPENDIX C, F, G, H, I, J
2010 CALIFORNIA ELECTRICAL CODE – TITLE 24, PART 3
2010 CALIFORNIA MECHANICAL CODE – TITLE 24, PART 4
2010 CALIFORNIA PLUMBING CODE – TITLE 24, PART 5
2010 CALIFORNIA ENERGY CODE – TITLE 24, PART 6
2010 CALIFORNIA ELEVATOR SAFETY CONSTRUCTION CODE – TITLE 24, PART 7
2010 CALIFORNIA HISTORICAL BUILDING CODE – TITLE 24, PART 8
2010 CALIFORNIA FIRE CODE – TITLE 24, PART 9
2010 CALIFORNIA EXISTING BUILDING CODE – TITLE 24, PART 10
2010 CALIFORNIA REFERENCED STANDARDS – TITLE 24, PART 12
2010 CALIFORNIA GREEN BUILDING STANDARDS CODE – TITLE 24, PART 11

NOTE: ALL DESIGN AND PLANS BASED ON THE 2008 BUILDING ENERGY CODE.

## CALIFORNIA GREEN BUILDING CODE

1. DESIGNATED (CLEAN AIR VEHICLE) PARKING – SECTION 5.106.5.2
   TOTAL SPACE COUNT: 648 X 8% = 52 DESIGNATED PARKING SPACES PROVIDED
2. LONG-TERM BICYCLE PARKING – SECTION 5.106.4.2
   TOTAL SPACE COUNT (INCLUDING SURFACE LOT PARKING): 648 X 5% = 33 BICYCLE PARKING SPACES PROVIDED
3. ELECTRIC VEHICLE CHARGING STATIONS
   TOTAL SPACE COUNT: 3 ELECTRIC VEHICLE CHARGING STATIONS PROVIDED (POWER PROVISIONS ONLY) (INCLUDING 1 ACCESSIBLE SPACE) (1-LEVEL P1, 2-LEVEL B1)

## VICINITY MAP

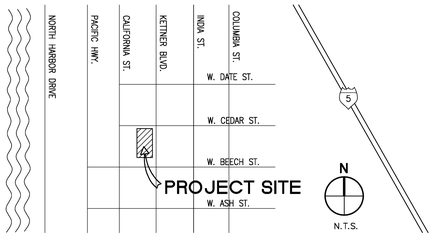


## SHEET INDEX


A0.01 COVER SHEET
A0.02 WALL TYPES, ABBREVIATIONS, & SYMBOLS
A0.03 MAXIMUM TRAVEL DISTANCE PLAN & ACCESSIBLE PATH OF TRAVEL
A0.04 FIRE EXTINGUISHER PLAN
A0.05 ACCESSIBILITY/ELEVATOR NOTES & DETAILS

### CIVIL

C-100 EXISTING CONDITIONS
C-200 GRADING PLAN

### LANDSCAPE

LC-1.0 LANDSCAPE CONSTRUCTION PLAN, LEGEND, AND NOTES
LC-2.0 LANDSCAPE CONSTRUCTION DETAILS
LI-1.0 LANDSCAPE IRRIGATION PLAN, LEGEND, AND NOTES
LI-2.0 LANDSCAPE IRRIGATION DETAILS
LP-1.0 LANDSCAPE PLANTING PLAN, LEGEND, AND NOTES
LP-2.0 LANDSCAPE PLANTING DETAILS

### ARCHITECTURAL

A1.01 SITE PLAN
A2.01 B3 AND B2 LEVEL PLANS
A2.02 B1 AND P1 LEVEL PLANS
A2.03 P2 AND P3 LEVEL PLANS
A2.04 P4 AND P5 LEVEL PLANS
A2.05 P6 AND P7 LEVEL PLANS
A2.06 CANOPY/ROOF PLAN
A3.01 EXTERIOR ELEVATIONS
A3.02 EXTERIOR ELEVATIONS
A3.03 BUILDING SECTIONS
A3.04 BUILDING SECTIONS
A4.01 STAIR NO.1 ENLARGED PLANS
A4.02 STAIR NO.1 ENLARGED PLANS & SECTION
A4.03 STAIR NO.2 ENLARGED PLANS
A4.04 STAIR NO.2 ENLARGED PLANS & SECTION
A4.05 ENLARGED ELEVATOR CORE NO.1
A4.06 ENLARGED ELEVATOR CORE & SECTION
A4.07 ELEVATOR SECTION
A4.08 ELEVATOR EXTERIOR AND INTERIOR ELEVATIONS
A4.09 ENLARGED FLOOR PLANS
A4.10 ENLARGED FLOOR PLANS
A4.11 ENLARGED FLOOR PLANS
A4.12 ENLARGED FLOOR PLANS
A4.13 SECTION/ELEVATIONS
A4.14 CANOPY PLAN/ELEVATION & DETAILS
A4.15 STAIR NO.2 ENLARGED SECTION
A5.01 DOOR AND WINDOW SCHEDULE
A5.02 ELEVATOR NOTES AND DETAILS
A6.01 WALL SECTIONS
A6.02 WALL SECTIONS
A6.03 WALL SECTIONS
A6.04 WALL SECTIONS
A6.05 WALL SECTIONS
A6.06 WALL SECTIONS
A6.07 WALL SECTIONS
A6.08 WALL SECTIONS
A6.09 WALL SECTIONS
A6.10 WALL SECTIONS
A7.01 STAIR DETAILS
A7.02 DETAILS
A7.03 DETAILS
A7.04 DETAILS
A7.05 DETAILS
A9.01 SIGNAGE SCHEDULE AND DETAILS
A9.02 STRIPING AND MARKING DETAILS

### STRUCTURAL

S1.0 GENERAL NOTES, ABBREVIATIONS & SHEET INDEX
S2.1 B3 & B2 LEVEL FLOOR PLAN
S2.1a MAT FOUNDATION REINFORCEMENT
S2.2 B1 & P1 LEVEL FLOOR PLAN
S2.3 P2 & P3 LEVEL FLOOR PLAN
S2.4 P4 & P5 LEVEL FLOOR PLAN
S2.5 P6 & P7 LEVEL FLOOR PLAN
S2.6 PARTIAL PLANS
S2.10 PARTIAL PLANS
S2.11 PARTIAL PLANS AT ELEVATORS
S2.12 PARTIAL PLANS AT STAIR
S3.1 COLUMN SCHEDULE & DETAILS
S3.2 SHEARWALL ELEVATION
S3.2a SHEARWALL ELEVATION
S3.3 SHEARWALL ELEVATION
S3.4 SHEARWALL ELEVATION
S3.5 RAMP SECTION
S3.6 BUILDING SECTION
S3.7 ELEVATOR ELEVATIONS
S4.1 TYPICAL CONCRETE DETAILS
S4.2 TYPICAL CONCRETE DETAILS
S4.3 TYPICAL SLAB REINFORCING & DETAILS
S4.4 ALTERNATE SLAB REINFORCING & TIES
S4.5 TYPICAL MASONRY DETAILS
S4.6 CONCRETE & MASONRY DETAILS
S4.7 CONCRETE DETAILS
S4.8 CONCRETE & MASONRY DETAILS
S4.10 BEAM ELEVATIONS
S4.11 BEAM ELEVATIONS
S4.12 BEAM ELEVATIONS
S4.13 CONCRETE DETAILS
S4.14 CONCRETE DETAILS
S5.1 STEEL DETAILS

### ELECTRICAL

E0.1 SYMBOLS AND ABBREVIATIONS
E0.2 LIGHTING FIXTURE AND CONTROLS SCHEDULES
E0.3 TITLE 24
E0.4 TITLE 24
E1.01 SITE PLAN
E2.01 B3 AND B2 LEVEL LIGHTING PLAN
E2.02 B1 AND P1 LEVEL LIGHTING PLAN
E2.03 P2 AND P3 LEVEL LIGHTING PLAN
E2.04 P4 AND P5 LEVEL LIGHTING PLAN
E2.05 P6 AND P7 LEVEL LIGHTING PLAN
E3.01 B3 AND B2 LEVEL POWER AND SYSTEMS PLAN
E3.02 B1 AND P1 LEVEL POWER AND SYSTEMS PLAN
E3.03 P2 AND P3 LEVEL POWER AND SYSTEMS PLAN
E3.04 P4 AND P5 LEVEL POWER AND SYSTEMS PLAN
E3.05 P6 AND P7 LEVEL POWER AND SYSTEMS PLAN
E4.01 ENLARGED PLANS
E5.01 SINGLE LINE DIAGRAM AND VOLTAGE DROP SCHEDULE
E6.01 PANEL SCHEDULES
E7.01 DETAILS

### MECHANICAL

M0-1 MECH SCHEDULES, NOTES, DETAILS
M0-2 WIRING/CONTROLS
M0-3 WIRING/CONTROLS
M2-1 MECH B-3 & B-2 PARKING LEVEL
M2-2 MECH B-1 & P-1 PARKING LEVEL
M2-3 MECH P-2 & P-6 PARKING LEVEL

### PLUMBING

P0.1 PLUMBING LEGEND, SCHEDULES, AND GENERAL NOTES
P2.1 PLUMBING B3 AND B2 LEVEL PLAN
P2.2 PLUMBING B1 AND P1 LEVEL PLAN
P2.3 PLUMBING P2 AND P3 LEVEL PLAN
P2.4 PLUMBING P4 AND P5 LEVEL PLAN
P2.5 PLUMBING P6 AND P7 LEVEL PLAN
P5.1 PLUMBING DETAILS

### WATERPROOFING

WP-1 BELOW GRADE WATERPROOFING UNDER MAT SLAB
WP-2 BELOW GRADE WATERPROOFING FOUNDATION WALLS
WP-3 BELOW GRADE WATERPROOFING FOUNDATION WALLS
WP-3a BELOW GRADE WATERPROOFING ELEVATOR AND SUMP PITS
WP-4 BELOW GRADE WATERPROOFING SHORED FOUNDATION WALLS
WP-5 BELOW GRADE WATERPROOFING SHORED FOUNDATION WALLS
WP-6 BELOW GRADE WATERPROOFING HORIZONTAL DECK/PLANTERS
WP-7 BELOW GRADE WATERPROOFING WALL SECTIONS
WP-8 BELOW GRADE WATERPROOFING DETAILS
WP-9 BELOW GRADE WATERPROOFING DETAILS
WP-10 BELOW GRADE WATERPROOFING DETAILS

### FIRE PROTECTION

1 OF 7 COVER SHEET & DETAILS
2 OF 7 B3 & B2 FIRE SPRINKLER PLAN
3 OF 7 B1 & P1 FIRE SPRINKLER & STANDPIPE PLAN
4 OF 7 P2 AND P3 STANDPIPE PLAN
5 OF 7 P4 AND P5 STANDPIPE PLAN
6 OF 7 P6 AND P7 STANDPIPE PLAN
7 OF 7 BUILDING SECTIONS


## ZONING ANALYSIS

| | | |
|---|---|---|
| ADDRESS: | 735 WEST CEDAR STREET, SAN DIEGO, CA 92101 | |
| LEGAL DESCRIPTION: | LOTS 1-12, BLOCK 28, MIDDLETOWN | |
| A.P.N.: | 533-322-04, -05, -06, -07, -09, -10 | |
| ZONE: | CENTER CITY | |
| OVERLAY ZONE(S): | LITTLE ITALY | |
| SETBACKS: | CEDAR STREET: | 15'-0"<br>50' HEIGHT AT 45 DEGREE AT P.L. |
| | KETTNER: | 15'-0"<br>85' HEIGHT |
| MAX. BLDG. HEIGHT: | VARIES (SUN ANGLE) | |
| PROPOSED BLDG. HEIGHT: | | |
| PARKING SPACE SIZE: | 8.5' X 18'-0" | |

## DEFERRED APPROVALS

1. FIRE SPRINKLER & STANDPIPE SYSTEMS
2. FIRE ALARM & DETECTION SYSTEMS
3. STEEL STAIRS & RAILING
4. ELEVATOR GUIDE RAIL
5. ALUMINUM STOREFRONT (GLAZED AND WIRE SCREEN)
6. ROOF LEVEL: SHADE CANOPY AND SUPPORT STRUCTURE
7. EXTERIOR FACADE: VERTICAL FINS AND SUPPORT STRUCTURE
8. EXTERIOR FACADE: COMPOSITE METAL SIDING / METAL STUD FRAMED EYEBROW
   A. NORTH AND WEST ELEVATION – VERTICAL FIN SURROUND
   B. NORTH AND WEST ELEVATION – SHADE CANOPY EYEBROW
9. SEE STRUCTURAL DRAWINGS FOR ADDITIONAL DEFERRED APPROVALS

## PROJECT DIRECTORY

| | |
|---|---|
| OWNER: | COUNTY OF SAN DIEGO<br>5560 OVERLAND AVE. SUITE 270<br>SAN DIEGO, CA 92123<br>CONTACT: JEFF REDLITZ |
| GENERAL CONTRACTOR: | McCARTHY BUILDING COMPANY<br>20401 S.W. BIRCH STREET, SUITE 300<br>NEWPORT BEACH, CA 92660<br>P: 949.851.8383<br>CONTACT: SHAWN BURKHOLDER |
| CIVIL ENGINEER: | NASLAND<br>4740 RUFFNER STREET<br>SAN DIEGO, CA 92111<br>P: 858.292.7770<br>CONTACT: ADAM PODLICH |
| LANDSCAPE: | SCHMIDT DESIGN GROUP, INC.<br>2655 FOURTH AVENUE<br>SAN DIEGO, CA 92103<br>P: 619.236.1462<br>CONTACT: JEFF JUSTUS |
| ARCHITECT: | INTERNATIONAL PARKING DESIGN, INC.<br>2 FARADAY, SUITE 101<br>IRVINE, CA 92618<br>P: 949.595.8004<br>CONTACT: DON MARKS, PAT ASKINS |
| MECHANICAL: | THERMALAIR, INC.<br>1140 RED GUM ST.<br>ANAHEIM, CA 92806<br>P: 714.630.3200<br>CONTACT: STEPHEN WEISS |
| PLUMBING: | MA ENGINEERS<br>5160 CARROLL CANYON RD., SUITE 200<br>SAN DIEGO, CA 92121<br>P: 858.200.0030<br>CONTACT: BILL HOEVELER |
| ELECTRICAL: | SPARLING<br>9191 TOWN CENTER DRIVE, SUITE 220<br>SAN DIEGO, CA 92122<br>P: 858.622.2700<br>CONTACT: LAWRENCE RAMIREZ |
| BELOW-GRADE WATERPROOFING ENGINEER: | COURTNEY<br>16781 MILLIKAN AVENUE<br>IRVINE, CALIFORNIA 92606<br>P: 949.222.2050<br>CONTACT: REID EVERETT |
| FIRE PROCTECTION CONTRACTOR / ENGINEER: | COSCO FIRE PROTECTION<br>10695 TREENA STREET SUITE 105<br>SAN DIEGO, CALIFORNIA 92131<br>P: 858.444.2000 |

## PROJECT DATA / CODE ANALYSIS

| | | |
|---|---|---|
| PROJECT ADDRESS: | 735 WEST CEDAR STREET<br>SAN DIEGO, CA 92101 | |
| PROJECT DESCRIPTION: | CAST-IN-PLACE CONCRETE, 7-LEVEL OPEN PARKING GARAGE OVER 3-LEVEL ENCLOSED PARKING GARAGE | |
| MIXED USE: | S-2 OPEN PARKING GARAGE OVER S-2 ENCLOSED PARKING GARAGE (311.3) | |
| GROSS FLOOR AREA: | 221,291 S.F. | |
| CODE ANALYSIS (CBC CODE REFERENCE) | | |
| CATEGORY | S-2 OPEN PARKING GARAGE | S-2 ENCLOSED PARKING GARAGE |
| TYPE OF CONSTRUCTION: | TYPE II-A | TYPE I-A |
| OCCUPANCY GROUP(S): | S-2 LOW-HAZARD STORAGE | S-2 LOW-HAZARD STORAGE |
| VENTILATION: | NATURAL VENTILATION | MECHANICAL |
| ALLOWABLE HEIGHT: | 10 TIERS (TABLE 406.3.5) | UNLIMITED (TABLE 406.3.5) |
| PROPOSED BUILDING HEIGHT: | 6 TIERS (82'-2" ABOVE GRADE) | 3 TIERS |
| ALLOWABLE FLOOR AREA | 50,000 S.F. (TABLE 406.3.5) | UNLIMITED (TABLE 406.3.5) |
| PROPOSED FLOOR AREA PER TIER: | 23,833 S.F. | 23,833 S.F. |
| GROSS FLOOR AREA: (PER OCCUPANCY): | 157, 287 S.F. | 63,304 S.F. |
| OCCUPANT LOAD FACTOR: | 200 (TABLE 1004.1.1-PARKING GARAGE) | 200 (TABLE 1004.1.1-PARKING GARAGE) |
| OCCUPANT LOAD/STORY: | 23,833/200 = 120 | 23,833/200 = 120 |
| NUMBER OF EXITS REQUIRED/STORY: | 2 (CBC TABLE 1021.1) | 2 (CBC TABLE 1021.1) |
| NUMBER OF EXITS PROVIDED/STORY: | 2 | 2 |
| EXIT & STAIR ANALYSIS: | | |
| STAIR/EXIT WIDTH REQUIRED: | 120 X 0.3 = 68.10"<br>36"/ 12 = 3.0' | 120 X 0.3 = 68.10"<br>36"/ 12 = 3.0' |
| STAIR/EXIT WIDTH PROVIDED: | 8.0' (2 STAIRS AT 4.0' WIDE EACH) | 8.0' (2 STAIRS AT 4.0' WIDE EACH) |
| EXIT TRAVEL DISTANCE REQUIRED: | 300' (TABLE 1016.1)<br>REFER TO SHEET A0.03 | 400' (TABLE 1016.1)<br>REFER TO SHEET A0.03 |

FIRE PROTECTION:

FIRE PROTECTION SYSTEMS:

1. COMBINATION CLASS I STANDPIPE/SPRINKLER SYSTEM AS DEFINED BY NFPA 13 AND NFPA 14 (S-2 ENCLOSED PARKING STRUCTURE ONLY)
2. CLASS I STANDPIPE SYSTEM (S-2 OPEN PARKING GARAGE ONLY)
2. FIRE ALARM AND DETECTION SYSTEMS PER THE BUILDING CODE, CALIFORNIA FIRE CODE, RELEVANT LAWS, ORDINANCES, ETC. AS DETERMINED BY THE FIRE CODE OFFICIAL.

REQUIRED SEPARATION OF OCCUPANCIES: 1-HOUR FIRE-RESISTANCE RATING (TABLE 508.4)

FIRE RESISTANCE RATING REQUIREMENTS FOR BUILDING ELEMENTS (TABLE 601):

| BUILDING ELEMENTS | S-2 OPEN: REQUIRED PER TABLE 601 (HOURS) | S-2 ENCLOSED REQUIRED PER TABLE 601 (HOURS) | PROVIDED AS DESCRIBED PER TABLE 720.1 (1), (2), (3) |
|---|---|---|---|
| PRIMARY STRUCTURAL FRAME | 1 | 3 | 3 |
| EXTERIOR BEARING WALLS | 1 | 3 | 3 |
| INTERIOR BEARING WALLS | 1 | 3 | 3 |
| EXTERIOR NONBEARING WALLS | NON-RATED | NON-RATED | NON-RATED |
| INTERIOR NONBEARING WALLS | NON-RATED | NON-RATED | NON-RATED |
| FLOOR CONSTRUCTION AND SECONDARY MEMBERS | 1 | 2 | 2 |
| ROOF CONSTRUCTION AND SECONDARY MEMBERS | 1 | 1.5 | 0 (FOOTNOTE "a" TABLE 601) |

NOTES:

* BUILDING ELEMENT NOT A PART OF THIS BUILDING DESIGN
** REFER TO CBC TABLE 602 (X<5) AND NOTE d.
*** REFER TO CBC SECTION 406.3.11.

EXTERIOR WALL FIRE RESISTANCE RATING BASED ON FIRE SEPARATION DISTANCE TO LOT LINE (TABLE 602):

| LOT LINE | DISTANCE | REQUIRED FIRE RATING | REMARKS |
|---|---|---|---|
| NORTH | 17'-8" | 0 | PUBLIC RIGHT-OF-WAY (CEDAR) |
| SOUTH | 47'-6" | 0 | LOT LINE (EXISTING STRUCTURE) |
| EAST | 49'-6" | 0 | PUBLIC RIGHT-OF-WAY (KETTNER) |
| WEST | 2'-8" | 0 | PUBLIC RIGHT-OF-WAY (MTS) |

**County of San Diego Cedar & Kettner Development Project**
San Diego, California

McCARTHY
20401 S.W. BIRCH STREET SUITE 300
Newport Beach, California 92660

Architect
IPD
Alameda
Irvine
Los Angeles
Architecture / Engineering / Consulting
www.ipd-global.com
2 Faraday, Suite 101, Irvine CA 92618
Phone 949 595 8004 Fax 949 595 8011

| Revision | Date |
|---|---|
| 100% DESIGN DEVELOPMENT | 10/23/13 |
| 90% CDs - 1ST PLAN CHECK | 12/24/13 |
| 2ND PLAN CHECK | 04/23/14 |

| | |
|---|---|
| Date | |
| IPD Job No. | 13-813 |
| Drawn By | MP |
| Checked By | |
| Scale | AS SHOWN |

CONSTRUCTION DOCUMENTS

Drawing Title
COVER SHEET

Drawing No.
**A0.01**

IPD, Inc.

# County of San Diego Cedar and Kettner Development Project
# PARKING STRUCTURE
## SAN DIEGO, CA

## ADDITIONAL GENERAL NOTES

1. THE CONSTRUCTION SHALL NOT RESTRICT A FIVE-FOOT CLEAR AND UNOBSTRUCTED ACCESS TO ANY WATER OR POWER DISTRIBUTION FACILITIES (POWER POLES, PULL-BOXES, TRANSFORMERS, VAULTS, PUMPS, VALVES, METERS, APPURTENANCES, ETC) OR TO THE LOCATION OF THE HOOK-UP. THE CONSTRUCTION SHALL NOT BE WITHIN TEN FEET OF ANY POWER LINES – WHETHER OR NOT THE LINES ARE LOCATED ON THE PROPERTY. FAILURE TO COMPLY MAY CAUSE CONSTRUCTION DELAYS AND/OR ADDITIONAL EXPENSES.

2. AN APPROVED SEISMIS GAS SHUTOFF VALVE WILL BE INSTALLED ON THE FUEL GAS LINE ON THE DOWN STREAM SIDE OF THE UTILITY METER AND BE RIGIDLY CONNECTED TO THE EXTERIOR OF THE BUILDING OR STRUCTURE CONTAINING THE FUEL GAS PIPING (PER ORDINANCE 170, 158) (INCLUDES COMMERCIAL ADDITIONS AND T.I. WORK OVER $10,000) SEPARATE PLUMBING PERMIT REQUIRED.

3. PROVIDE ULTRA FLUSH WATER CLOSETS FOR ALL NEW CONSTRUCTION. EXISTING SHOWER HEADS AND TOILETS MUST BE ADAPTED FOR LOW WATER CONSUMPTION.

4. A COPY OF THE EVALUATION REPORT AND/OR CONDITIONS OF LISTING SHALL BE MADE AVAILABLE AT THE JOB SITE.

5. FIRE RATED ASSEMBLIES SHALL BE PER TABLE 720, GENERIC ASSEMBLIES OF GYPSUM HANDBOOK, HAVE LARR APPROVAL OR ICC APPROVAL

6. PROJECTIONS BEYOND THE EXTERIOR WALL MUST NOT EXTEND BEYOND WHICHEVER RESULTS IN THE LESSER PROJECTION:
A. A POINT ONE-THIRD THE DISTANCE FROM AN ASSUMED VERTICAL PLANE LOCATED WHERE PROTECTED OPENINGS ARE FIRST REQUIRED DUE TO LOCATION ON PROPERTY. (704.2, 705.2)
B. A POINT MORE THAN 12" INTO AREA WHEN OPENINGS ARE PROHIBITED. (705.2)
C. PROVIDE MINIMUM 30 INCH HIGH PARAPET PER 705.11.1 OR AS INDICATED ON THE DRAWINGS.

7. PENETRATIONS IN WALLS REQUIRING PROTECTED OPENINGS MUST BE FIRESTOPPED WITH AN APPROVED MATERIAL IN ACCORDANCE WITH SECTION 713.3.1. SPACE BETWEEN PENETRATING MATERIALS (DESCRIBED BELOW) MUST BE DESIGNED TO PREVENT THE MOVEMENT OF HOT FLAME OR GASES.

a. STEEL, COPPER OR FERROUS PIPES OR CONDUITS MAY PENETRATE CONCRETE OR MASONRY WALLS WHERE THE PENETRATING ITEM IS A MAXIMUM 6-INCH DIAMETER AND THE AREA OF THE OPENING THROUGH THE WALL DOES NOT EXCEED 144 SQUARE INCHES.

b. MEMBRANE PENETRATIONS OF MAXIMUM 2-HR FIRE-RESISTANCE RATED WALL AND PARTITIONS BY STEEL ELECTRICAL OUTLET BOXES NOT EXCEEDING 16 SQUARE INCHES ARE PERMITTED PROVIDED OPENINGS DO NOT EXCEED 100 SQUARE INCHES FOR ANY 100 SQUARE FEET OF WALL AREA. OUTLET BOXES ON OPPOSITE SIDES OF WALLS OR PARTITIONS MUST BE SEPARATED BY A HORIZONTAL DISTANCE OF 24 INCHES.

c. WHERE WALLS ARE PENETRATED BY OTHER MATERIALS OR WHERE LARGER OPENINGS ARE REQUIRED THAN PERMITTED IN (B) ABOVE, THEY MUST BE QUALIFIED BY TESTS CONDUCTED IN ACCORDANCE WITH SECTION 713.3.1.1.

8. SMOKE AND FIRE DAMPERS MUST BE INSTALLED IN THE FOLLOWING LOCATIONS PER SECTIONS 716.3.2.

a. DUCT PENETRATIONS OF FIRE WALLS IN ACCORDANCE TO SECTION 716.11.

b. DUCT PENETRATIONS OF FIRE BARRIERS, EXCEPT EXIT ENCLOSURES AND EXIT PASSAGEWAYS WHERE THEY ARE NOT ALLOWED TO PENETRATE. (716.5.2)

c. DUCTS PENETRATING SHAFTS. (716.5.3)

d. DUCTS PENETRATING FIRE PARTITIONS AND FIRE-RATED CORRIDOR WALLS. SEE EXCEPTION FOR STEEL DUCTS WITH NO OPENINGS INTO CORRIDOR (716.5.4)

e. DUCTS PENETRATING SMOKE BARRIERS. (716.5.5)

f. DUCTS PENETRATING HORIZONTAL ASSEMBLIES. (716.6)

9. DRAFT STOPS:

a. IN BUILDINGS USED FOR OTHER THAN RESIDENTIAL OCCUPANCIES, DRAFT STOPS MUST BE INSTALLED IN WOOD FRAME FLOOR CONSTRUCTION CONTAINING CONCEALED SPACE. SUCH DRAFT STOPS MUST BE INSTALLED SO THAT THE AREA OF THE CONCEALED SPACE DOES NOT EXCEED (1000) SQUARE FEET. (717.3.3)

b. IN BUILDINGS USED FOR OTHER THAN RESIDENTIAL OCCUPANCIES, DRAFT STOPS MUST BE INSTALLED IN THE ATTIC (MANSARDS) (OVERHANGS) (FALSE FRONTS SET OUT FROM WALLS) (SIMILAR CONCEALED SPACES) FORMED BY COMBUSTIBLE CONSTRUCTION. SUCH DRAFT STOPS MUST BE INSTALLED SO THAT THE AREA OF THE CONCEALED SPACE DOES NOT EXCEED (3000) SQUARE FEET. (717.4.3)

c. DRAFT-STOPPING MATERIALS MUST NOT BE LESS THAN 1/2-INCH GYPSUM BOARD, 3/8-INCH PLYWOOD, 3/8-INCH TYPE 2-M PARTICLE BOARD OR OTHER MATERIALS APPROVED BY THE BUILDING DEPARTMENT. DRAFT-STOPPING MUST BE ADEQUATELY SUPPORTED. (717.3.1)

10. DRAFT STOPS SHALL BE PROVIDED WITHIN ATTICS, MANSARDS, OVERHANGS AND SIMILAR CONCEALED SPACES FORMED OF COMBUSTIBLE CONSTRUCTION, UNLESS THE BUILDING IS SPRINKLERED WITH NFPA 13 SPRINKLER SYSTEM (3000 SF BETWEEN DRAFT STOPS). (717.4.3)

11. DRAFT STOP SHALL BE PROVIDED WITH A CONCEALED FLOOR-CEILING ASSEMBLY FORMED OF COMBUSTIBLE CONSTRUCTION, UNLESS THE BUILDING IS SPRINKLERED WITH NFPA 13 SPRINKLER SYSTEM (1000 SF BETWEEN DRAFT STOPS). (717.3.2 & 3)

12. FIRE BLOCKING MUST BE PROVIDED IN ACCORDANCE WITH SECTION 717 AT THE FOLLOWING LOCATIONS:

a. IN CONCEALED SPACES OF STUD WALLS AND PARTITIONS, INCLUDING FURRED SPACES, AT THE CEILING AND FLOOR LEVELS.

b. IN CONCEALED SPACES OF STUD WALLS AND PARTITIONS, INCLUDING FURRED SPACES, AT 10-FOOT INTERVALS ALONG THE LENGTH OF THE WALL.

c. AT ALL INTERCONNECTIONS BETWEEN CONCEALED VERTICAL AND HORIZONTAL SPACES SUCH AS OCCUR AT SOFFITS, DROP CEILINGS AND COVE CEILINGS.

d. IN CONCEALED SPACES BETWEEN STAIR STRINGERS AT THE TOP AND BOTTOM OF THE RUN AND BETWEEN STUDS ALONG AND IN LINE WITH THE RUN OF STAIRS IF THE WALL UNDER THE STAIRS IS UNFINISHED.

e. IN OPENINGS AROUND VENTS, PIPES, DUCTS, CHIMNEYS, FIREPLACES AND SIMILAR OPENINGS WHICH AFFORD A PASSAGE FOR FIRE AT CEILING AND FLOOR LEVELS, WITH NONCOMBUSTIBLE MATERIALS.

13. INTERIOR FINISH MATERIALS APPLIED TO WALL AND CEILING SHALL BE TESTED AS SPECIFIED IN SECTION 803. CLASSIFICATIONS PER TABLE 803.9 AND SECTION 803.1.

| AREA (OCCUPANCY) | FINISH CLASSIFICATION |
|---|---|
| a. EXIT ENCLOSURES AND EXIT PASSAGEWAYS (S-2, B) | B |
| b. CORRIDORS (S-2, B) | C |
| c. ROOMS AND ENCLOSED SPACES (S-2, B) | C |

14. ALL EXIT DOORS SHALL COMPLY WITH SECTION 1008-1008.1
a. CLEAR WIDTH OF EACH DOOR OPENING SHALL BE MIN. 32" OR PER SECTION 1005.1, WHICHEVER IS GREATER.
b. MINIMUM DOOR HEIGHT OF 6'-8"
c. SHALL BE CAPABLE OF OPENING 90 DEGREES
d. THE MAXIMUM WIDTH OF A SWINGING DOOR LEAF SHALL BE 48" NOMINAL.
e. EXIT DOOR SHALL BE SIDE-HINGED SWINGING TYPE.

15. a. ALL ELEVATOR PITS SHALL BE EQUIPPED WITH A DRAIN TO PREVENT THE ACCUMULATION OF WATER. THE WATER AND OTHER LIQUIDS COLLECTED IN THE BOTTOM OF AN ELEVATOR SHAFT MAY NOT BE DISCHARGED TO THE SANITARY OR STORM DRAIN. PLUMBING INFORMATION BULLETIN P/PC 2001-04
b. EVERY SPACE INTENDED FOR HUMAN OCCUPANCY SHALL BE PROVIDED WITH NATURAL LIGHT BY MEANS OF EXTERIOR GLAZED OPENINGS IN ACCORDANCE WITH SECTION 1205.2. OR SHALL BE PROVIDED WITH ARTIFICIAL LIGHT THAT IS ADEQUATE TO PROVIDE AN AVERAGE ILLUMINATION OF 10 FOOT CANDLES OVER THE AREA OF THE ROOM AT A HEIGHT OF 30 I NCHES ABOVE THE FLOOR LEVEL (1205.1 AND 1205.3).

16. a. TOILET ROOM FLOOR SHALL HAVE A SMOOTH, HARD NON-ABSORBANT SURFACE SUCH AS PORTLAND CEMENT, CERAMIC TILE OR OTHER APPROVED MATERIAL THAT EXTENDS UPWARD ONTO THE WALL AT LEAST 4 INCHES (1210.1)
b. WALLS WITHIN 2 FEET OF THE FRONT AND SIDES OF URINALS AND WATER CLOSETS SHALL HAVE A SMOOTH, HARD NON-ABSORBANT SURFACE TO A HEIGHT OF 4 FEET, AND EXCEPT FOR STRUCTURAL ELEMENTS, THE MATERIAL USED IN SUCH WALLS SHALL BE A TYPE THAT IS NOT ADVERSELY AFFECTED BY MOISTURE.

17. EXITS MAINTAINED (CBC 1021.1.1): THE REQUIRED EXITS SHALL BE MAINTAINED UNTIL ARRIVAL AT GRADE OR THE PUBLIC WAY.

18. EACH PANE OF SAFETY GLAZING INSTALLED IN HAZARDOUS LOCATIONS SHALL BE IDENTIFIED BY A MANUFACTURER'S DESIGNATION SPECIFYING WHO APPLIED THE DESIGNATION, THE MANUFACTURER OR INSTALLER AND THE SAFETY GLAZING STANDARD. THE FOLLOWING SHALL BE CONSIDERED SPECIFIC HAZARDOUS LOCATIONS FOR THE PURPOSE OF SAFETY GLAZING.
GLAZING IN: SECTION 2406
a. SWING DOORS.
b. FIXED AND SLIDING PANELS OF SLIDING DOOR ASSEMBLIES AND PANELS IN SLIDING AND BI-FOLD CLOSET DOOR ASSEMBLIES.
c. STORM DOORS.
d. UNFRAMED SWINGING DOORS.
e. DOORS AND ENCLOSURES FOR HOT TUBS, WHIRLPOOLS, SAUNAS, STEAM ROOMS, BATHTUBS, AND SHOWERS.
f. FIXED OR OPERABLE PANELS ADJACENT TO A DOOR WHERE THE NEAREST EXPOSED EDGE OF THE GLAZING IS WITHIN 24 INCHES (610 MM) ARC OF EITHER VERTICAL EDGE OF THE DOOR IN A CLOSED POSITION AND WHERE THE BOTTOM EXPOSED EDGE OF THE GLAZING IS LESS THAN 60 INCHES (1525 MM) ABOVE THE WALKING SURFACE. READ CODE FOR EXCEPTIONS.
g. FIXED OR OPERABLE PANEL, OTHER THAN DESCRIBED IN ITEMS E AND F, WHICH MEETS ALL OF THE FOLLOWING CONDITIONS (READ CODE FOR EXCEPTION WITH SPECIAL INSTALLATION).
i) EXPOSED AREA OF AN INDIVIDUAL PANE GREATER THAN 9 SQUARE FEET (0.84 M2)
ii) EXPOSED BOTTOM EDGE LESS THAN 18 INCHES (457 MM) ABOVE THE FLOOR.
iii) EXPOSED TOP EDGE GREATER THAN 36 INCHES (914 MM) ABOVE THE FLOOR.
iv) ONE OR MORE WALKING SURFACES WITH 36 INCHES (914 MM) HORIZONTALLY OF THE PLANE OF THE GLAZING.
h. GUARDS AND RAILINGS REGARDLESS OF AREA OF HEIGHT ABOVE A WALKING SURFACE. INCLUDED ARE STRUCTURAL BALUSTER PANELS AND NONSTRUCTURAL IN-FILL PANELS.
i. WALLS AND FENCES ENCLOSING INDOOR AND OUTDOOR SWIMMING POOLS AND SPAS WHERE ALL OF THE FOLLOWING CONDITIONS ARE PRESENT:
i) THE BOTTOM EDGE OF THE GLAZING IS LESS THAN 60 INCHES (1525 MM) ABOVE A WALKING SURFACE ON THE POOL OR SPA SIDE OF THE GLAZING.
ii) THE GLAZING IS WITHIN 60 INCHES (1525 MM) OF A SWIMMING POOL OR SPA WATER'S EDGE.
j. ADJACENT TO STAIRWAYS, LANDINGS AND RAMPS WITHIN 36 INCHES HORIZONTALLY OF A WALKING SURFACE; WHEN THE EXPOSED SURFACE OF THE GLASS IS LESS THAN 60 INCHES ABOVE THE PLANE OF THE ADJACENT WALKING SURFACE (READ CODE FOR EXCEPTION WITH SPECIAL INSTALLATION).
k. ADJACENT TO STAIRWAYS WITHIN 60 INCHES HORIZONTALLY OF THE BOTTOM TREAD OF A STAIRWAY IN ANY DIRECTION WHEN THE EXPOSED SURFACE OF THE GLASS IS LESS THAN 60 INCHES ABOVE THE NOSE OF THE TREAD (READ CODE FOR EXCEPTION WITH SPECIAL INSTALLATION).

19. PROVIDE A WEEP SCREED FOR STUCCO AT THE FOUNDATION PLATE LINE A MINIMUM OF 4 INCHES ABOVE THE EARTH OR 2 INCHES ABOVE PAVED AREAS. WEEP SCREEDS SHALL BE OF A TYPE WHICH WILL ALLOW TRAPPED WATER TO DRAIN TO THE EXTERIOR OF THE BUILDING. (SHOW THESE DIMENSIONS ON A FOUNDATION DETAIL DRAWING) ( SECTION 2512.1.2)
20. PAN TO BE SECURED IN FORMWORK PRIOR TO POURING.
21. GALVANIZE AFTER FABRICATION.
22. BERM TO DIVERT WATER TO DRAIN WHERE INDICATED OR REQUIRED.
23. GRATING PAN SIZE: 1'-4" X 4'-0" UNLESS OTHERWISE NOTED. (SEE PLANS FOR SIZE AND LOCATION).
24. COORDINATE WITH PLUMBING DWGS. PRIOR TO FABRICATION.
25. FOR GRATINGS LOCATED IN THE SURFACE OF ANY PEDESTRIAN WAY IN THE PATH OF TRAVEL, GRID/OPENINGS IN GRATINGS SHALL BE LIMITED TO 1/2"MAX. IN THE DIRECTION OF TRAFFIC FLOW. IF SUCH CONDITION OCCURS, PROVIDE MANUFACTURERS CUT-SHEETS REVIEW.

## RATED & NON-RATED ASSEMBLIES

USED FOR:
S-2 PARKING GARAGE
CBC TABLE 601

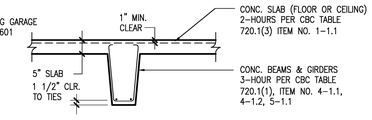


NOTE: REFER TO STRUCTURAL DRAWINGS FOR ADDITIONAL INFORMATION.

USED FOR:
S-2 PARKING GARAGE
CBC TABLE 601

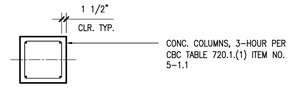


NOTE: REFER TO STRUCTURAL DRAWINGS FOR ADDITIONAL INFORMATION.

USED FOR:
S-2 PARKING GARAGE
CBC TABLE 601

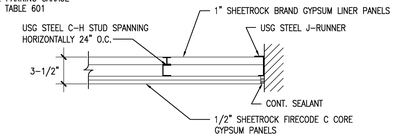


2 HOUR FIRE-RATED CEILING, AND STAIR SOFFIT, USG – REPORT NO. AER-09038

### WALL TYPES:

W1-USED FOR:
ELECTRICAL ROOM, BICYCLE PARKING ENCLOSURE, UTILITY ROOM, CCTV ROOM, ELEVATOR CONTROL ROOM, VENTILATION SHAFT, RAMP RETAINING WALL,

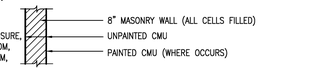


W2-USED FOR:
ELEVATOR HOISTWAY

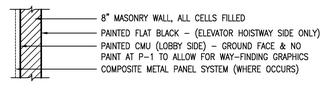


W3-USED FOR:
OFFICE, JANITORS CLOSET, RESTROOM

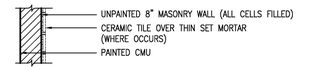


W4-USED FOR:
EXIT STAIR #1 AND #2
2-HOUR (1022.1)

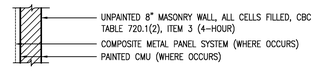


W5-USED FOR:
CMU INFILL WALL
(SEE EXTERIOR ELEVATIONS)

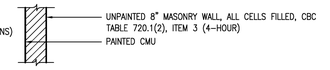


W6-USED FOR:
GROUND FACE CMU (SEE EXTERIOR ELEVATIONS)

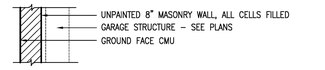


W7-USED FOR:
FRAMED WALL AT STAIR 1 & 2 (LEVELS P2 TO P6)

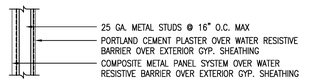


W8-USED FOR:
FRAMED WALL AT STAIR 1 & 2 (LEVELS P7)

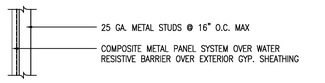


W9-USED FOR:
FIRE RATED WALL AT STAIR 1 & 2 (LEVEL P1)

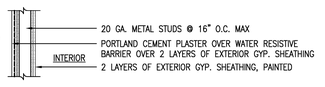


## ABBREVIATIONS

| | |
|---|---|
| @ | AT |
| A.D. | AREA DRAIN |
| ALUM. | ALUMINUM |
| ANOD. | ANODIZED |
| APPROX. | APPROXIMATELY |
| ARCH. | ARCHITECTURAL |
| AS | ACCESSIBLE SPACE |
| ASV | ACCESSIBLE VAN SPACE |
| BD. | BOARD |
| BLDG. | BUILDING |
| BLK. | BLOCK |
| BM. | BEAM |
| B.O. | BOTTOM OF |
| BOT. | BOTTOM |
| B.S.W. | BACK OF SIDEWALK |
| B.W. | BACK OF WALK |
| C | COMPACT STALL, CONCRETE |
| C.B. | CATCH BASIN |
| CEIL. | CEILING |
| C.I.P. | CAST IN PLACE |
| C.J. | CONTROL JOINT |
| C.L. | CENTER LINE |
| CLR. | CLEAR |
| COMM. | COMMUNICATION |
| CONC. | CONCRETE |
| CONN. | CONNECTION |
| CSK. | COUNTERSUNK |
| C.S.P. | COMBINATION STANDPIPE |
| C.P. | CEMENT PLASTER |
| C.T. | CERAMIC TILE |
| DBL. | DOUBLE |
| DET. | DETAIL |
| DIA. | DIAMETER |
| DIM. | DIMENSION |
| DISP. | DISPENSER |
| DN. | DOWN |
| DR. | DOOR |
| D.S.P. | DRY STANDPIPE |
| DWG's | DRAWINGS |
| EA. | EACH |
| E.F.D. | EMERGENCY FLOOR DRAIN |
| E.I.F.S. | EXTERIOR INSULATION FINISH SYSTEM |
| EL.,ELEV. | ELEVATION |
| ELEC. | ELECTRICAL |
| ELEV. | ELEVATOR or ELEVATION |
| EMER. | EMERGENCY |
| EQ. | EQUAL |
| EXIST | EXISTING |
| EXP. | EXPANSION |
| EXT. | EXTERIOR |
| F.D.C. | FIRE DEPT. CONNECTION |
| F.E.C. | FIRE EXTINGUISHER CABINET |
| F. FL | FINISH FLOOR |
| F.G. | FINISH GRADE |
| F.H.C. | FIRE HOSE CABINET |
| F.H.S. | FLAT HEAD SCREW |
| FIN. | FINISH |
| F.L. | FLOW LINE |
| FLR. | FLOOR |
| F.O. | FACE OF |
| F.O.C. | FACE OF CONCRETE |
| F.O.F.S. | FACE OF FINISH SURFACE |
| F.O.S. | FACE OF STUD |
| FOUND. | FOUNDATION |
| F.S. | FINISH SURFACE |
| GA. | GAUGE |
| GAL.,GALV. | GALVANIZED |
| GEN. | GENERAL |
| G.I. | GALVANIZED IRON |
| GRD. | GROUND |
| GYP. | GYPSUM |
| H., HT. | HEIGHT |
| H.B. | HOSE BIBB |
| HI. | HIGH |
| H.M. | HOLLOW METAL |
| H.P. | HIGH POINT |
| HPSW | HIGH POINT SWALE |
| HORIZ. | HORIZONTAL |
| HSA | HEADED STUD ANCHORS |
| H.V.S.C. | HARDWOOD VENEER SOLID CORE |
| I.C.B.O. | INTERNATIONAL CONFERENCE OF BUILDING OFFICIALS |
| I.D. | INSIDE DIAMETER |
| INT. | INTERIOR |
| JT. | JOINT |
| LAV. | LAVATORY |
| LLH. | LONG LEG HORIZONTAL |
| LLV. | LONG LEG VERTICAL |
| L.P. | LOW POINT |
| MANUF. | MANUFACTURER |
| MAS. | MASONRY |
| MAT. | MATERIAL |
| MAX. | MAXIMUM |
| MECH. | MECHANICAL |
| M.H. | MANHOLE |
| MIN. | MINIMUM |
| MISC. | MISCELLANEOUS |
| M.O. | MASONRY OPENING |
| MTL. | METAL |
| N.I.C. | NOT IN CONTRACT |
| O.C.B. | OVERFLOW CATCH BASIN |
| O.C. | ON CENTER |
| O.D. | OUTSIDE DIAMETER |
| O.F.D. | OVERFLOW DRAIN |
| OPG. | OPENING |
| PA | PLANTING AREA |
| PARA. | PARAPET |
| PART'N. | PARTITION |
| PART. | PARTIAL |
| P.C. | PRECAST |
| P.C. CONC.. | PRECAST CONCRETE |
| PENE. | PENETRATION |
| P.L. | PROPERTY LINE |
| P.P. | POWER POLE |
| PR. | PAIR |
| P.O.F. | PAY-ON-FOOT STATION TICKET DISPENSER |
| R | RADIUS, RISER |
| RAD. | RADIUS |
| R.D. | ROOF DRAIN |
| REINF. | REINFORCED (ING) |
| REQ'D. | REQUIRED |
| RHSMS | ROUND HEAD SHEET METAL SCREWS |
| RM. | ROOM |
| R.O. | ROUGH OPENING |
| S | STALL WIDTH |
| SC | SMALL CAR |
| SCHED. | SCHEDULE |
| S.D. | STORM DRAIN |
| SECT. | SECTION |
| SEP. | SEPARATION |
| SHT. | SHEET |
| SIM. | SIMILAR |
| SL. | SLOPE |
| S.M. | SHEET METAL |
| S.P. | STAND PIPE |
| SPECS. | SPECIFICATIONS |
| SPAND. | SPANDREL |
| S.S. | SECURITY STATION |
| STD. | STANDARD |
| STL. | STEEL |
| STRUCT. | STRUCTURAL |
| SURF. | SURFACE |
| T. | TOP |
| TC | TOP OF CURB |
| T.C.B. | TOP OF CATCH BASIN |
| T.COL. | TOP OF COLUMN |
| T.F.S. | TOP OF FINISH SLAB |
| T.G. | TOP OF GRATE |
| TR. | TREAD |
| T.R. | TOP OF RAIL |
| TRANSF. | TRANSFORMER |
| TEL. | EMERGENCY TELEPHONE "BLUE LIGHT" INTERCOM |
| T.O.C. | TOP OF CONCRETE |
| T.O.S. | TOP OF STEEL |
| T.P. | TOP OF PIER |
| T.S. | TOP OF SPANDREL |
| T.S.S. | TOP OF STRUCTURAL SLAB |
| T.T. | TOP OF TURF |
| T.W. | TOP OF WALL |
| T.W.D. | TRUNCATED WARNING DOMES |
| TYP. | TYPICAL |
| U.N.O. | UNLESS NOTED OTHERWISE |
| W/ | WITH |
| W.C. | WATER CLOSET |
| WD. | WOOD |
| W.I. | WROUGHT IRON |
| W.R. | WATER RESISTANT |
| W.S.P. | WET STANDPIPE |
| WV | WATER VALVE |
| W.W.M. | WOVEN WIRE MESH |
| W.O. | WHERE OCCURS |
| W.P. | WATERPROOF |
| -0- | ANGLE OF PARK |

## SYMBOLS

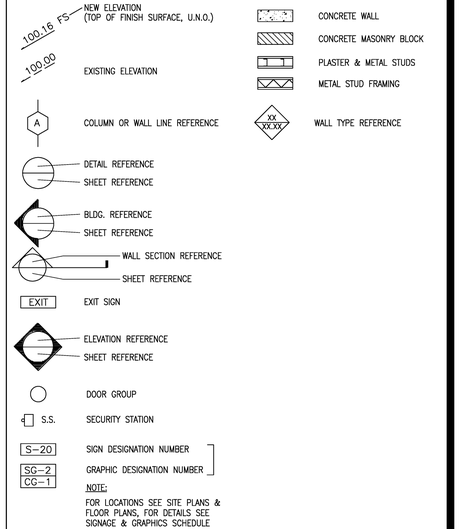


**County of San Diego Cedar & Kettner Development Project**
San Diego, California

McCARTHY
20401 S.W. BIRCH STREET SUITE 300
Newport Beach, California 92660

Architect
IPD
Alameda
Irvine
Los Angeles
Architecture / Engineering / Consulting
www.ipd-global.com
2 Faraday, Suite 101, Irvine CA 92618
Phone 949 595 8004 Fax 949 595 8011

| Revision | Date |
|---|---|
| 100% DESIGN DEVELOPMENT | 10/23/13 |
| 90% CDs - 1ST PLAN CHECK | 12/24/13 |
| 2ND PLAN CHECK | 04/23/14 |

| | |
|---|---|
| Date | |
| IPD Job No. | 13-813 |
| Drawn By | MS |
| Checked By | |
| Scale | AS SHOWN |

CONSTRUCTION DOCUMENTS

Drawing Title
WALL TYPES, ABBREVIATIONS & SYMBOLS

Drawing No.
**A0.02**

IPD, Inc.

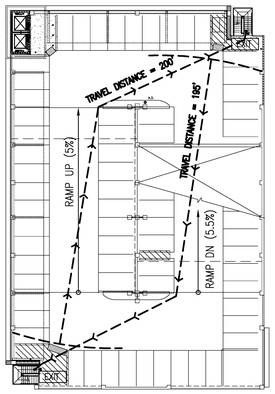


NOTE: MAX. TRAVEL DISTANCE ALLOWED < 300'

## P7 LEVEL EGRESS PLAN (13)

SCALE: 1" = 30'

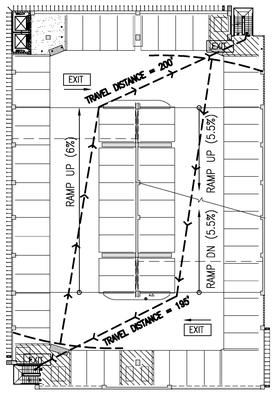


NOTE: MAX. TRAVEL DISTANCE ALLOWED < 300'

## P5 LEVEL EGRESS PLAN (11)

SCALE: 1" = 30'

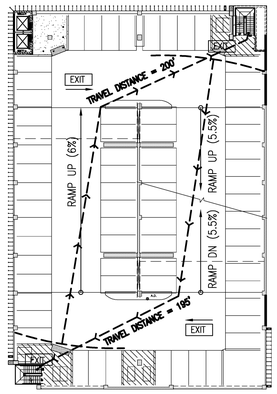


NOTE: MAX. TRAVEL DISTANCE ALLOWED < 300'

## P3 LEVEL EGRESS PLAN (9)

SCALE: 1" = 30'

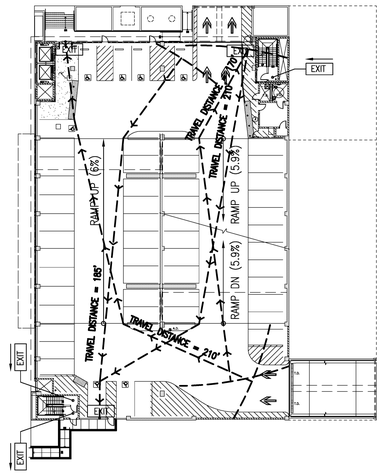


NOTE: MAX. TRAVEL DISTANCE ALLOWED < 300'

## P1 LEVEL EGRESS PLAN (7)

SCALE: 1" = 30'

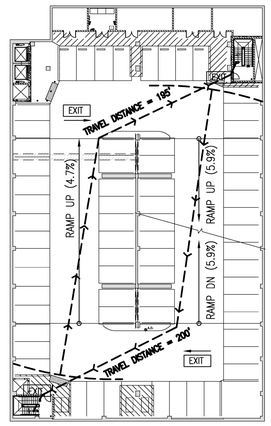


NOTE: MAX. TRAVEL DISTANCE ALLOWED < 400'

## B2 LEVEL EGRESS PLAN (5)

SCALE: 1" = 30'

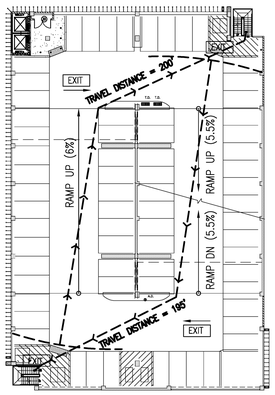


NOTE: MAX. TRAVEL DISTANCE ALLOWED < 300'

## P6 LEVEL EGRESS PLAN (12)

SCALE: 1" = 30'

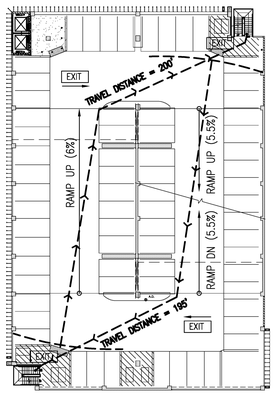


NOTE: MAX. TRAVEL DISTANCE ALLOWED < 300'

## P4 LEVEL EGRESS PLAN (10)

SCALE: 1" = 30'

STAIRWAYS IN OPEN PARKING STRUCTURES THAT SERVE ONLY THE PARKING STRUCTURE ARE NOT REQUIRED TO BE ENCLOSED. CBC 1022.1 EXC. 4

MAXIMUM OVERALL DIAGONAL DIMENSION = 214'-0"

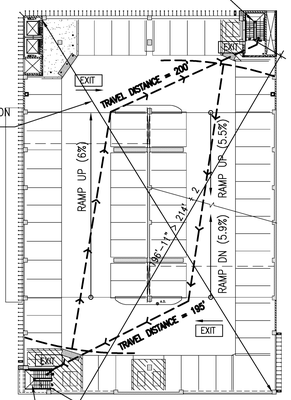


STAIRWAYS IN OPEN PARKING STRUCTURES THAT SERVE ONLY THE PARKING STRUCTURE ARE NOT REQUIRED TO BE ENCLOSED. CBC 1022.1 EXC. 4

NOTE: MAX. TRAVEL DISTANCE ALLOWED < 300'

## P2 LEVEL EGRESS PLAN (8)

SCALE: 1" = 30'

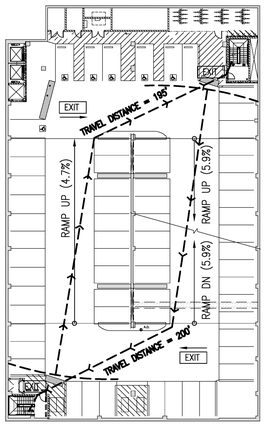


NOTE: MAX. TRAVEL DISTANCE ALLOWED < 400'

## B1 LEVEL EGRESS PLAN (6)

SCALE: 1" = 30'

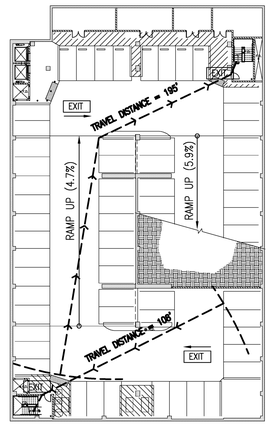


NOTE: MAX. TRAVEL DISTANCE ALLOWED < 400'

## B3 LEVEL EGRESS PLAN (4)

SCALE: 1" = 30'

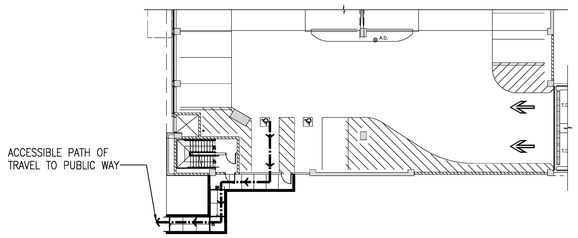


## P1 LEVEL ACCESSIBLE PATH OF TRAVEL (3)

SCALE: 1" = 20'

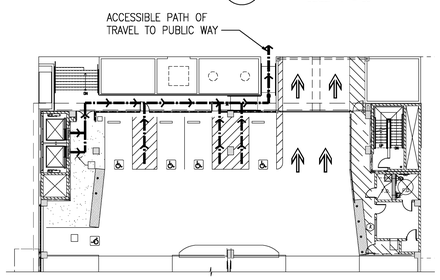


## P1 LEVEL ACCESSIBLE PATH OF TRAVEL (2)

SCALE: 1" = 20'

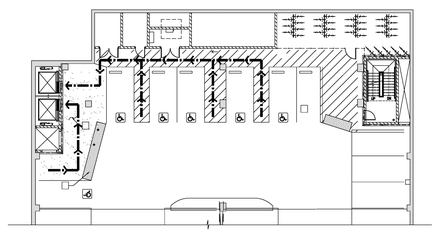

## B1 LEVEL ACCESSIBLE PATH OF TRAVEL (1)

SCALE: 1" = 20'

### LEGEND:

= (PER SECTION 1133B.7): "PATH OF TRAVEL (P.O.T.) AS INDICATED IS A BARRIER FREE ACCESS ROUTE WITHOUT ANY ABRUPT VERTICAL CHANGES EXCEEDING 1/2" BEVELED AT 1:2 MAXIMUM SLOPE, EXCEPT THAT LEVEL CHANGES DO NOT EXCEED 1/4" VERTICAL AND IS AT LEAST 48" WIDE. SURFACE IS SLIP RESISTANT, STABLE, FIRM, AND SMOOTH. CROSS-SLOPE DOES NOT EXCEED 2% AND SLOPE IN THE DIRECTION OF TRAVEL IS LESS THAN 5% UNLESS OTHERWISE INDICATED. (POT) SHALL BE MAINTAINED FREE OF OVERHANGING OBSTRUCTIONS TO 80" MINIMUM (1133B.8.2) AND PROTRUDING OBJECTS GREATER THAN 4" PROJECTION FROM WALL AND ABOVE 27" AND LESS THAN 80" (1133B.8.6). CONTRACTOR TO VERIFY THAT THERE ARE NO BARRIERS IN THE PATH OF TRAVEL, AND THE PATH OF TRAVEL COMPLIES WITH CBC 1133B.

= PEDESTRIAN EXIT PATH

EXIT = EXIT SIGN

### EXITING REQUIREMENT NOTES:

1. EXITS AND EXIT ACCESS DOORS SHALL BE MARKED BY AN APPROVED EXIT SIGN READILY VISIBLE FROM ANY DIRECTION OF EGRESS TRAVEL. THE PATH OF EGRESS TRAVEL TO EXITS AND WITHIN EXITS SHALL BE MARKED BY READILY VISIBLE EXIT SIGNS TO CLEARLY INDICATE THE DIRECTION OF EGRESS TRAVEL IN CASE WHERE THE EXIT OR THE PATH OF EGRESS IS NOT IMMEDIATELY VISIBLE TO THE OCCUPANTS. INTERVENING MEANS OF EGRESS DOORS WITHIN EXITS SHALL BY MARKED BY EXIT SIGNS. EXIT SIGN PLACEMENT SHALL BE SUCH THAT NO POINT IN AN EXIT ACCESS CORRIDOR OR EXIT PASSAGE WAY IS MORE THAN 100 FEET OR THE LISTED VIEWING DISTANCE FOR THE SIGN, WHICHEVER IS LESS, FROM THE NEAREST VISIBLE EXIT SIGN. (CBC 1011.1)

2. EXIT SIGNS SHALL BE INTERNALLY OR EXTERNALLY ILLUMINATED (CBC 1011.2)
   a) INTERNALLY ILLUMINATED EXIT SIGNS.
      ELECTRICALLY POWERED , SELF-LUMINOS AND PHOTOLUMINESCENT EXIT SIGNS SHALL BE LISTED AND LABELED IN ACCORDANCE WITH UL 924 AND SHALL BE INSTATED IN ACCORDANCE WITH THE MANUFACTURER INSTRUCTIONS AND CHAPTER 27. EXIT SIGNS SHALL BE ILLUMINATED AT ALL TIMES (CBC 1011.4)
   b) EXTERNALLY ILLUMINATED SIGNS
      EXTERNALLY ILLUMINATED EXIT SIGNS SHALL COMPLY WITH SECTIONS 1011.5.1 THROUGH 1011.5.3 (CBC 1011.5)

3. EXIT SIGN ILLUMINATION (CBC 1011.5.2).
   THE FACE OF AN EXIT SIGN ILLUMINATED FROM THE EXTERNAL SOURCE SHALL HAVE AN INTENSITY OF NOT LESS THEN 5-FOOT CANDLE (54LUX)

4. POWER SOURCE (CBC 1011.5.3)
   EXIT SIGNS SHALL BE ILLUMINATED AT ALL TIMES. TO ENSURE CONTINUED ILLUMINATION FOR A DURATION OF NOT LESS THEN 90 MIN. IN CASE OF PRIMARY POWER LOSS, THE SIGN ILLUMINATION MEANS SHALL BE CONNECTED TO AN EMERGENCY POWER SYSTEM PROVIDED FROM STORAGE BATTERIES, UNIT EQUIPMENT OR AN ON-SITE GENERATOR. THE INSTALLATION OF THE EMERGENCY POWER SYSTEM SHALL BE IN ACCORDANCE WITH CHAPTER 27.

5. ILLUMINATION REQUIRED (CBC 1006.1)
   THE MEANS OF EGRESS, INCLUDING THE EXIT DISCHARGE, SHALL BE ILLUMINATED AT ALL TIMES THE BUILDING SPACE SERVED BY THE MEANS OF EGRESS IS OCCUPIED.

6. ILLUMINATION LEVEL. (CBC 1006.2)
   THE MEANS OF EGRESS ILLUMINATION LEVEL SHALL NOT BE LESS THEN 1 FOOT-CANDLE (11 LUX) AT THE WALKING SURFACE

7. ILLUMINATION EMERGENCY POWER (CBC 1006.3)
   THE POWER SUPPLY FOR MEANS OF EGRESS ILLUMINATION SHALL NORMALLY BE PROVIDED BY THE PREMISES ELECTRICAL SUPPLY.

N

**County of San Diego**
**Cedar & Kettner**
**Development Project**
San Diego, California

McCARTHY
20401 S.W. BIRCH STREET SUITE 300
Newport Beach, California 92660

Architect
IPD
Alameda
Irvine
Los Angeles
Architecture / Engineering / Consulting
www.ipd-global.com
2 Faraday, Suite 101, Irvine CA 92618
Phone 949 595 8004 Fax 949 595 8011

| Revision | Date |
|---|---|
| 100% DESIGN DEVELOPMENT | 10/23/13 |
| 90% CDs - 1ST PLAN CHECK | 12/24/13 |
| 2ND PLAN CHECK | 04/23/14 |

| | |
|---|---|
| Date | |
| IPD Job No. | 13-813 |
| Drawn By | MP |
| Checked By | |
| Scale | 3/32" = 1'-0" |

CONSTRUCTION DOCUMENTS

Drawing Title
MAXIMUM TRAVEL DISTANCE PLAN & ACCESSIBLE PATH OF TRAVEL

Drawing No.
**A0.03**

IPD, Inc.

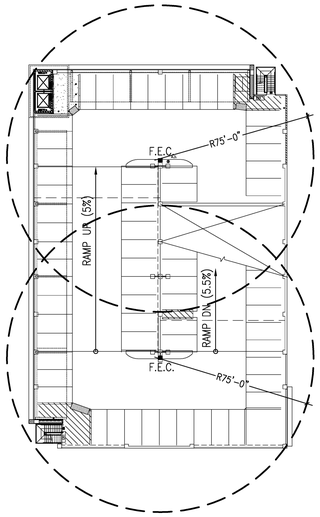


## P7 LEVEL PLAN

SCALE: 1" = 30'

10

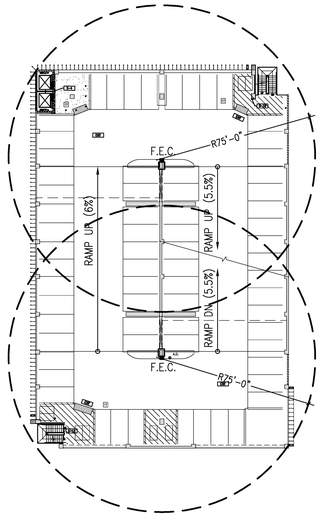


## P5 LEVEL PLAN

SCALE: 1" = 30'

8

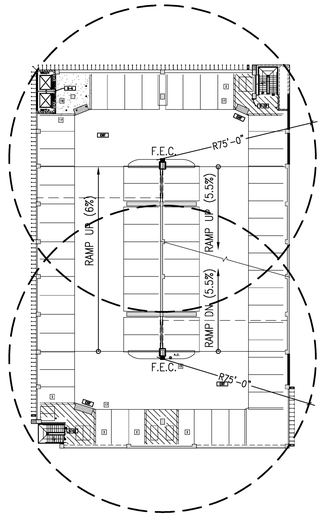


## P3 LEVEL PLAN

SCALE: 1" = 30'

6

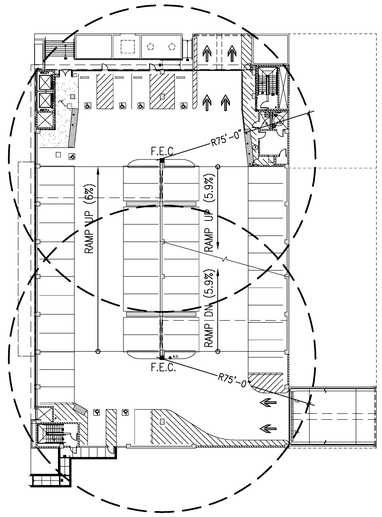


## P1 LEVEL PLAN

SCALE: 1" = 30'

4

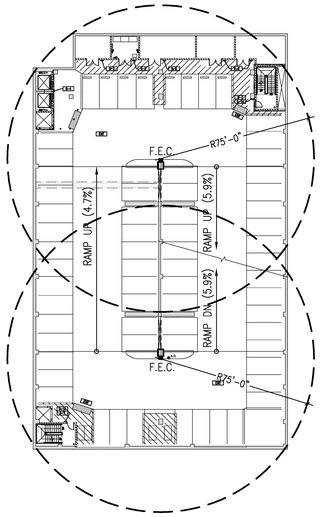


## B2 LEVEL PLAN

SCALE: 1" = 30'

2

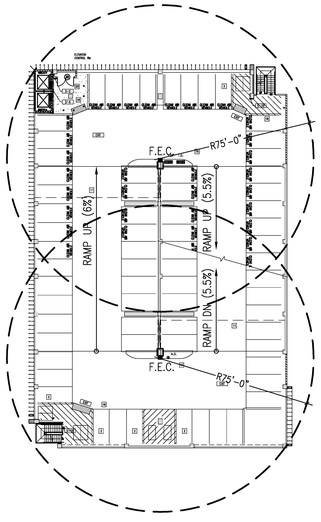


## P6 LEVEL PLAN

SCALE: 1" = 30'

9

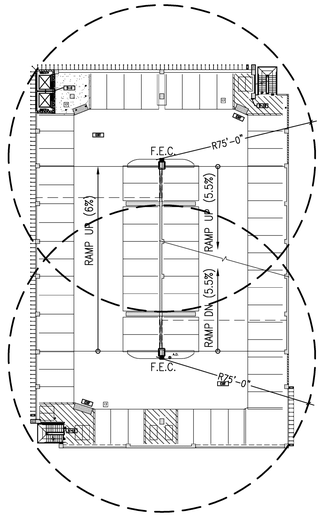


## P4 LEVEL PLAN

SCALE: 1" = 30'

7

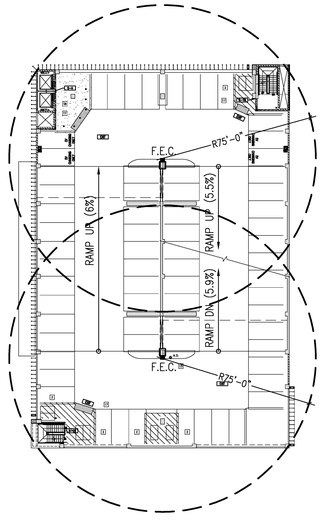


## P2 LEVEL PLAN

SCALE: 1" = 30'

5

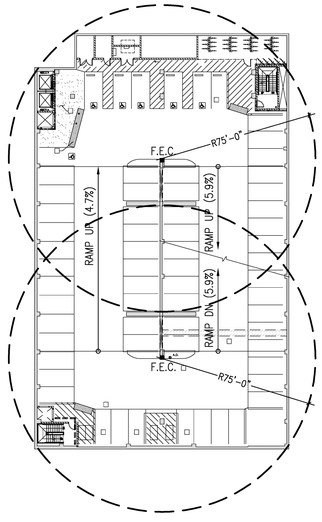


## B1 LEVEL PLAN

SCALE: 1" = 30'

3

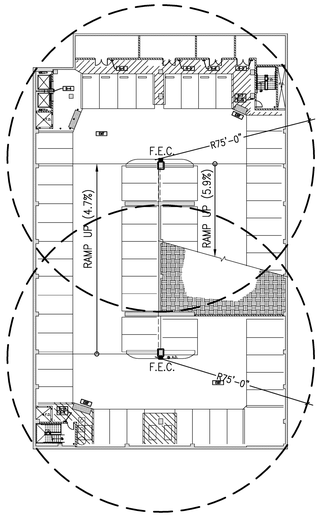


## B3 LEVEL PLAN

SCALE: 1" = 30'

1

LEGEND:

- F.E.C. = FIRE EXTINGUISHER CABINET (INSTALL PER MANUFACTURERS REQUIREMENTS)

FIRE EXTINGUISHER NOTES:

1. TYPE OF HAZARD: ORDINARY (LOW-HAZARD)
2. BASIC MINIMUM EXTINGUISHER RATING: 2A:10BC (10 lb. MIN.)
3. MAXIMUM TRAVEL DISTANCE TO EXTINGUISHER: 75 FT.
4. FIRE EXTINGUISHERS SHALL BE INSTALLED SO THAT THE TOP OF THE FIRE EXTINGUISHER HANDLE IS NOT MORE THAN (48") INCHES ABOVE FINISH FLOOR .
5. LOCAL FIRE AUTHORITY MAY REQUIRE ADDITIONAL FIRE EXTINGUISHER UNITS BASED ON FIELD INSPECTION.

N

**County of San Diego**
**Cedar & Kettner**
**Development Project**
San Diego, California

McCARTHY

20401 S.W. BIRCH STREET SUITE 300
Newport Beach, California 92660

Architect

IPD

Alameda
Irvine
Los Angeles

Architecture / Engineering / Consulting
www.ipd-global.com

2 Faraday, Suite 101, Irvine CA 92618
Phone 949 595 8004 Fax 949 595 8011

| Revision | Date |
|---|---|
| 100% DESIGN DEVELOPMENT | 10/23/13 |
| 90% CDs - 1ST PLAN CHECK | 12/24/13 |
| 2ND PLAN CHECK | 04/23/14 |

| | |
|---|---|
| Date | |
| IPD Job No. | 13-813 |
| Drawn By | MP |
| Checked By | |
| Scale | 3/32" = 1'-0" |

CONSTRUCTION DOCUMENTS

Drawing Title

FIRE EXTINGUISHER PLAN

Drawing No.

**A0.04**

IPD, Inc.

## ACCESSIBILITY DETAILS

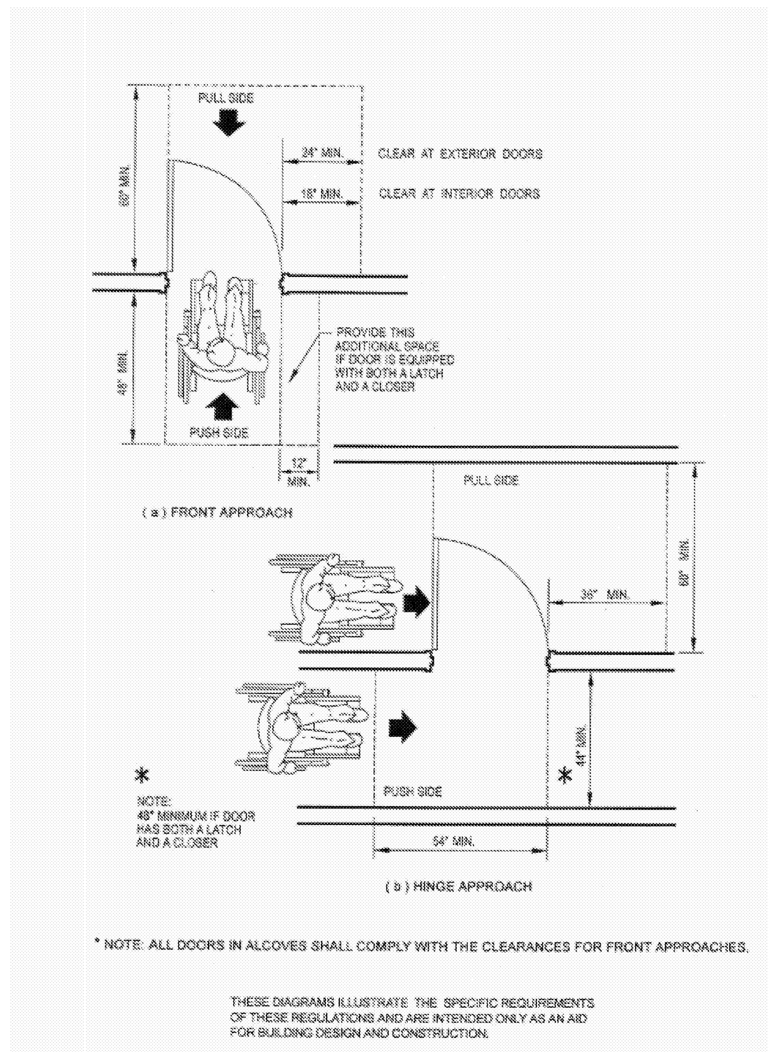

* NOTE: ALL DOORS IN ALCOVES SHALL COMPLY WITH THE CLEARANCES FOR FRONT APPROACHES.

THESE DIAGRAMS ILLUSTRATE THE SPECIFIC REQUIREMENTS OF THESE REGULATIONS AND ARE INTENDED ONLY AS AN AID FOR BUILDING DESIGN AND CONSTRUCTION.

FIGURE 11B-26A—LEVEL MANEUVERING CLEARANCE AT DOORS

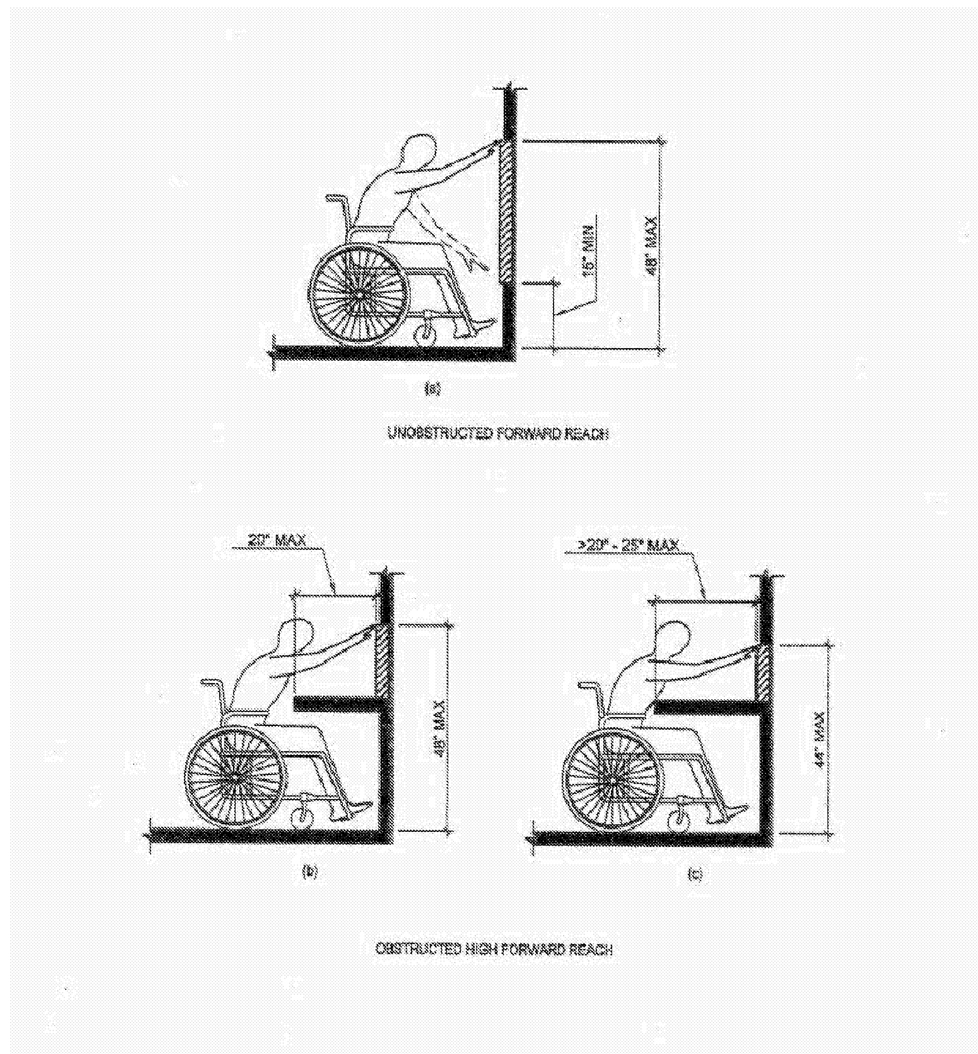

FIGURE 11B-5C—FORWARD REACH

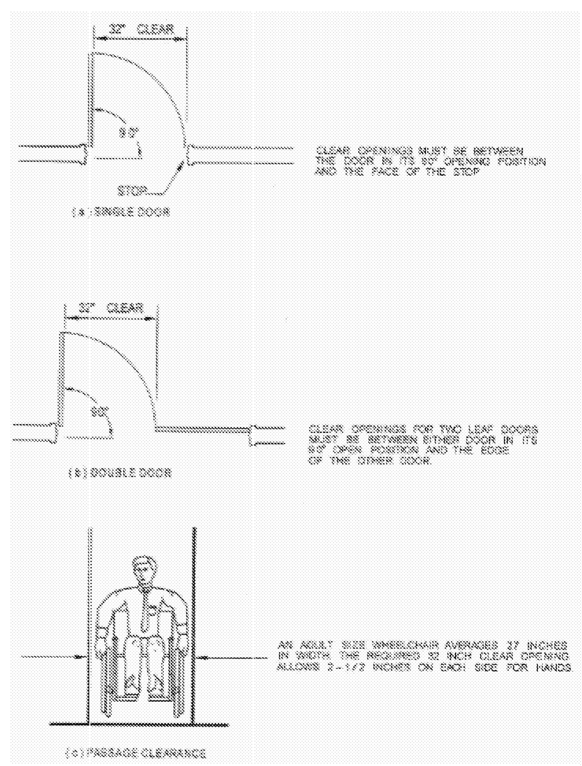

FIGURE 11B-5B—DOOR WIDTH

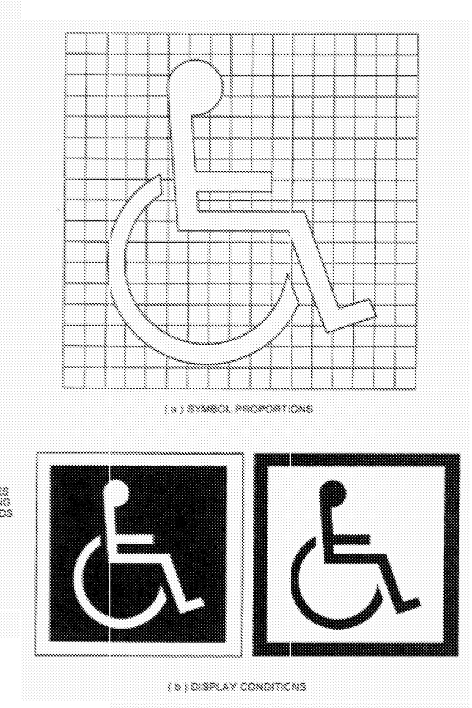

FIGURE 11B-6—INTERNATIONAL ACCESSIBILITY SYMBOL

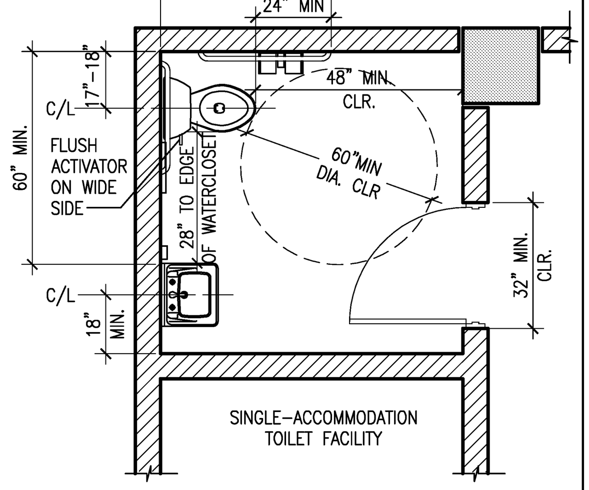

SINGLE-ACCOMMODATION TOILET FACILITY

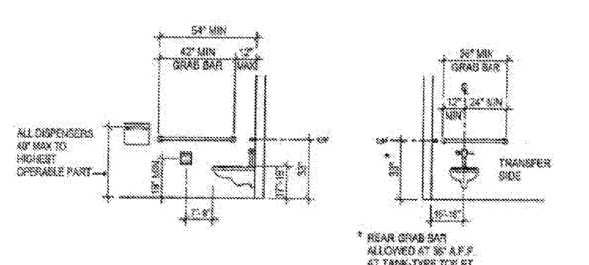

FIGURE 11B-1A

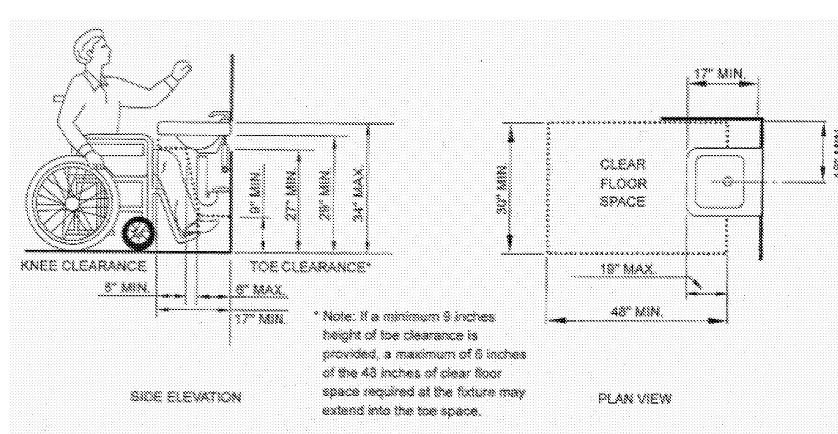

FIGURE 11B-1D—KNEE CLEARANCE

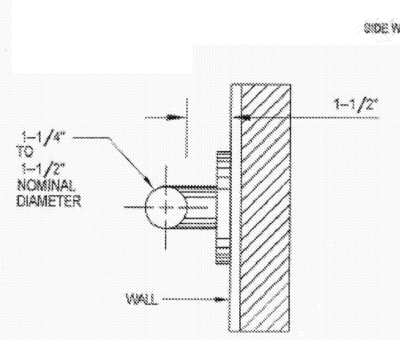

FIGURE 11B-1C—TYPICAL GRAB BAR SECTION

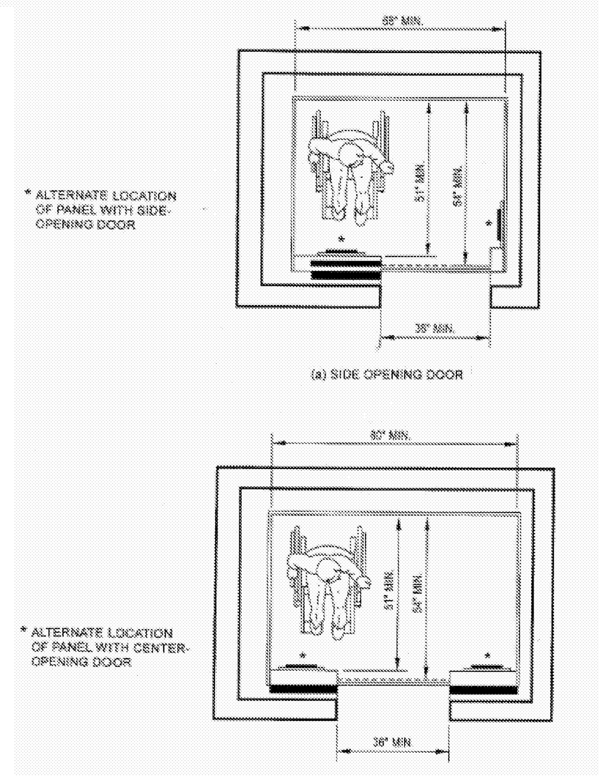

FIGURE 11B-40A—MINIMUM DIMENSIONS OF ELEVATOR CARS

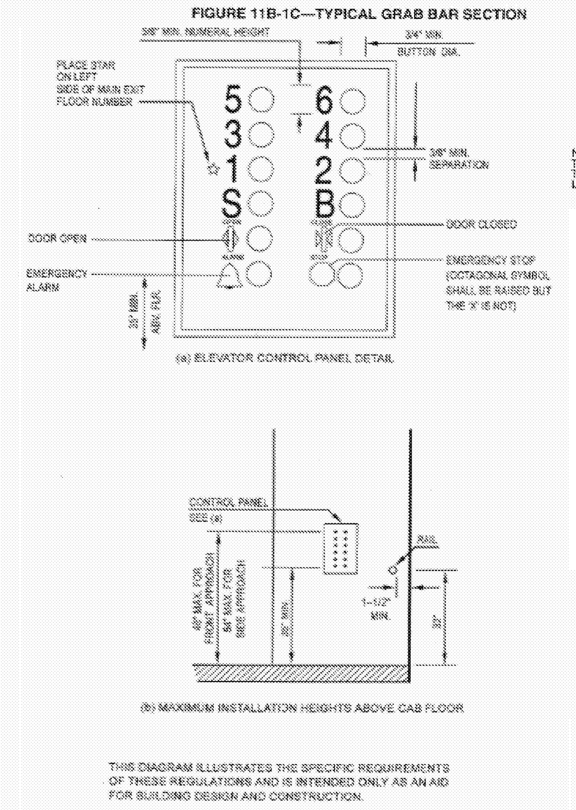

THIS DIAGRAM ILLUSTRATES THE SPECIFIC REQUIREMENTS OF THESE REGULATIONS AND IS INTENDED ONLY AS AN AID FOR BUILDING DESIGN AND CONSTRUCTION.

FIGURE 11B-40B—ELEVATOR CONTROL PANEL

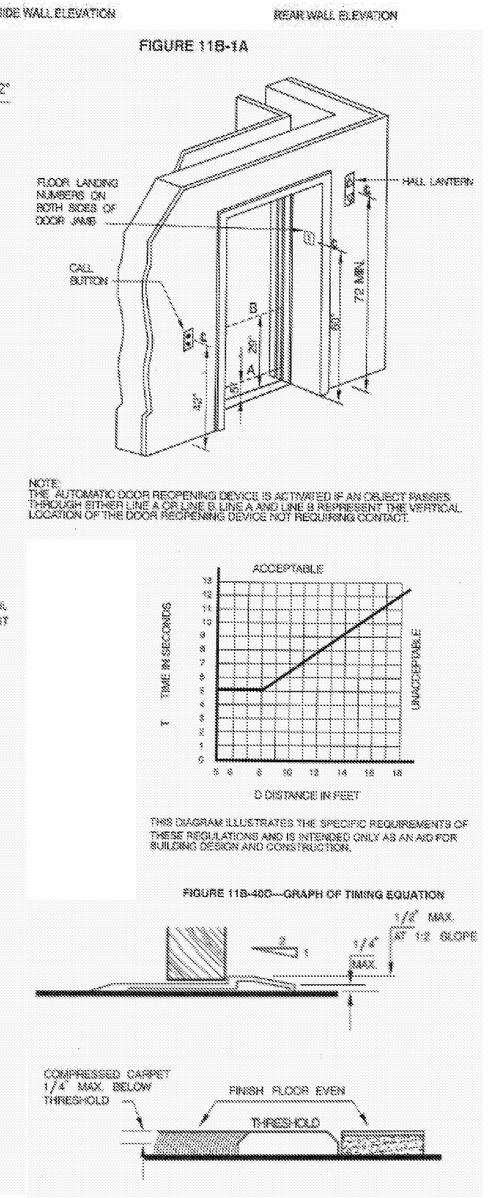

FIGURE 11B-32—THRESHOLDS

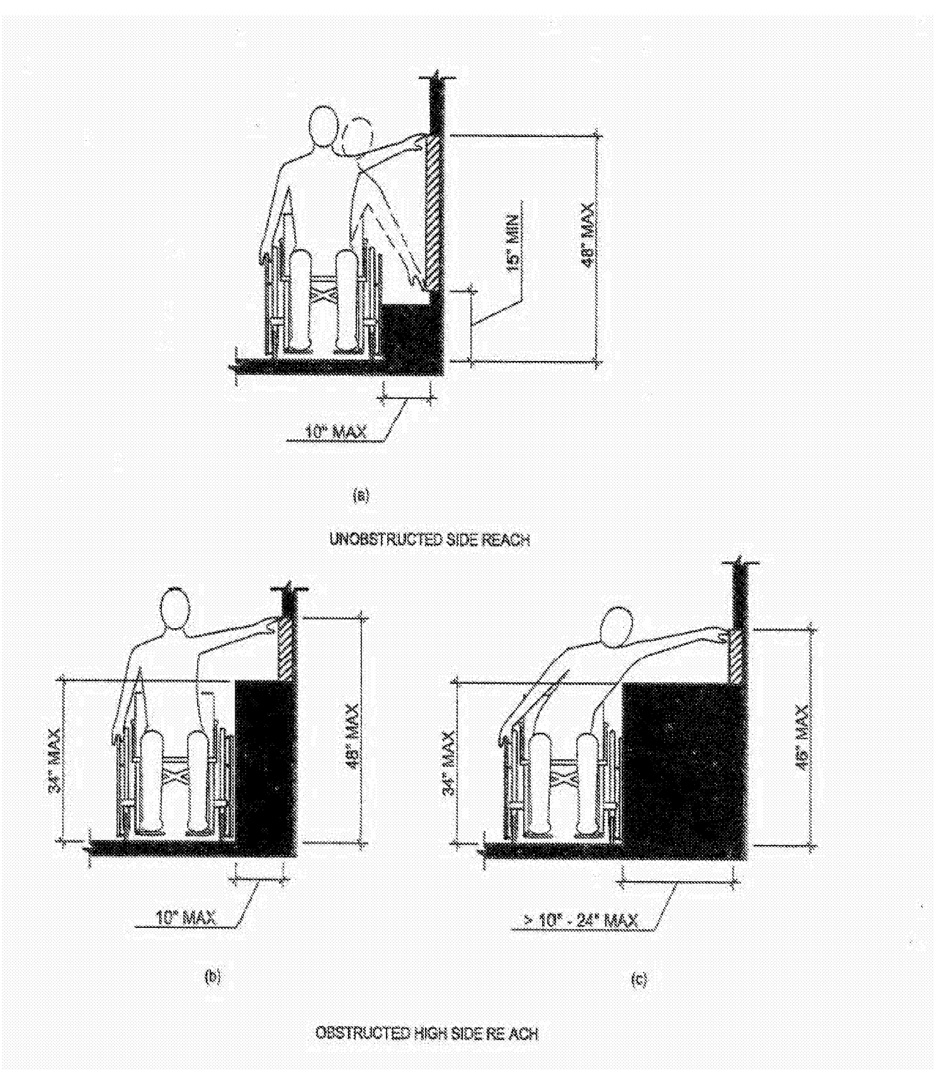

FIGURE 11B-5D—SIDE REACH

NOTE: THESE DIAGRAMS ILLUSTRATE THE SPECIFIC REQUIREMENTS OF THESE REGULATIONS AND ARE INTENDED ONLY AS AN AID FOR BUILDING DESIGN AND CONSTRUCTION.

IPD, Inc.

## ELEVATOR NOTES

1. PASSENGER ELEVATORS SHALL BE LOCATED ON A MAJOR ACCESSIBLE ROUTE AND PROVISIONS SHALL BE MADE TO ASSURE THAT THEY REMAIN ACCESSIBLE AND USABLE AT ALL TIMES THE BUILDING IS OCCUPIED. (1124A.2, 1116B.1.15)
2. THE CAR INSIDE SHALL ALLOW FOR THE TURNING OF A WHEELCHAIR. THE MINIMUM CLEAR DISTANCE BETWEEN WALLS OR BETWEEN WALL AND DOOR, EXCLUDING RETURN PANELS, SHALL BE NOT LESS THAN 80" BY 54" FOR CENTER-OPENING DOORS, AND 68" BY 54" FOR SIDE-SLIDE OPENING DOORS. MINIMUM DISTANCE FROM WALL TO RETURN PANEL SHALL BE NOT LESS THAN 51". (1124A.3.2, 1116B.1.8, FIG 11-7A & FIG 11B-40A)
3. MINIMUM CLEAR WIDTH FOR ELEVATOR DOORS SHALL BE 36". (1124A.3.2.1, 1116B.1.4, FIG 11A-7A & FIG 11B-40A)
4. ELEVATOR NOTES 4A-4F :

   A. A HANDRAIL SHALL BE PROVIDED ON ONE WALL OF THE CAR, PREFERABLY THE REAR. THE RAILS SHALL BE SMOOTH AND THE INSIDE SURFACE AT LEAST 1-1/2" CLEAR OF THE WALLS AT A NOMINAL HEIGHT BETWEEN 31" AND 33" ABOVE THE FLOOR. 32" IS REQUIRED TO REDUCE INTERFERENCE WITH CAR CONTROLS WHERE THE LOWEST BUTTON IS CENTERED AT 35" FROM FLOOR. (1116B.1.11, FIG 11A-7B & FIG 11B-40B)
   B. THE CENTERLINE OF ELEVATOR FLOOR BUTTONS SHALL BE NO HIGHER THAN 54" ABOVE THE FINISH FLOOR FOR SIDE APPROACH AND 48" FOR FRONT APPROACH. WHERE POSSIBLE A 48-INCH MAXIMUM HEIGHT FOR ELEVATOR FLOOR BUTTONS IS PREFERRED. (1124A.3.3.1, 1116B.1.8, FIG 11A-7B & FIG 11B-40B)
   C. FLOOR BUTTONS SHALL BE PROVIDED WITH VISUAL INDICATIONS TO SHOW WHEN EACH CALL IS REGISTERED. THE VISUAL INDICATORS SHALL BE EXTINGUISHED WHEN EACH CALL IS ANSWERED. (1124.3.3.1, 1116B.1.8, FIG 11A-7B & FIG 11B-40B)
   D. EXCEPT FOR PHOTO ELECTRIC TUBE BY-PASS SWITCHES, EMERGENCY CONTROLS, INCLUDING THE EMERGENCY STOP AND ALARM, SHALL BE GROUPED IN OR ADJACENT TO THE BOTTOM OF THE PANEL AND SHALL BE NO LOWER THAN 2'-11" FROM THE FLOOR. FOR MULTIPLE CONTROLS ONLY ONE SET MUST COMPLY WITH THESE HEIGHT REQUIREMENTS. (1124A.3.3.1, 1116B.1.8, FIG 11A-7B & FIG 11B-40B)
   E. THE CENTERLINE OF THE HALL CALL BUTTONS SHALL BE NO HIGHER THAN 3'-6" OFF THE FLOOR. THE BUTTONS SHALL BE A MINIMUM OF ¾" IN SIZE AND SHALL BE RAISED 1/8" + 1/32" ABOVE THE SURROUNDING SURFACE. VISUAL INDICATION SHALL BE PROVIDED TO SHOW EACH CALL REGISTERED AND EXTINGUISHED WHEN ANSWERED. OBJECTS ADJACENT TO AND BELOW HALL CALL BUTTONS SHALL NOT PROJECT MORE THAN 4" FROM THE WALL. (1124A.4, 1116B.1.10, FIG 11A-7C & FIG 11B-40C)
   F. THE EMERGENCY TELEPHONE HANDSET SHALL BE POSITIONED NO HIGHER THAN 4' ABOVE THE FLOOR, AND THE HANDSET CORD SHALL BE A MINIMUM OF 2'-5" IN LENGTH. (11124A.3.4, 1116B.1.8)

5. ELEVATOR NOTES 5A-5P :

   A. IF THE TELEPHONE SYSTEM IS LOCATED IN A CLOSED COMPARTMENT, THE COMPARTMENT DOOR HARDWARE SHALL BE OF THE LEVER TYPE, CONFORMING TO THE PROVISIONS OF SECTION 1008.1.8, TYPE OF LOCK OR LATCH. EMERGENCY INTERCOMMUNICATION SHALL NOT REQUIRE VOICE COMMUNICATION. (1124A.3.4, 1116B.1.8)
   B. A CAR POSITION INDICATOR SHALL BE PROVIDED ABOVE THE CAR CONTROL PANEL OR OVER THE DOOR TO SHOW THE POSITION OF THE ELEVATOR IN THE HOIST WAY. AS THE CAR PASSES OR STOPS AT A FLOOR SERVED BY THE ELEVATORS, THE CORRESPONDING NUMERALS SHALL ILLUMINATE, AND AN AUDIBLE SIGNAL SHALL SOUND. (1116B.1.9)
   C. NUMERALS SHALL BE A MINIMUM OF ½" IN HEIGHT. (1116B.1.9)
   D. AN AUDIBLE VERBAL ANNOUNCEMENT OR SIGNAL SHALL SOUND TO TELL PASSENGERS THAT THE CAR IS STOPPING OR PASSING A FLOOR SERVED BY THE ELEVATOR. THE AUDIBLE SIGNAL SHALL BE NO LESS THAN 20 DECIBELS WITH A FREQUENCY NO HIGHER THAN 1500 HZ. (1116B.1.9)
   E. THE MINIMUM ILLUMINATION AT THE CAR CONTROLS, THRESHOLD, AND THE LANDING WHEN THE CAR AND LANDING DOORS ARE OPEN SHALL NOT BE LESS THAN 5 FOOT-CANDLES. (1124A.5, 1116B.1.12)
   F. IDENTIFICATION FOR THE VISUALLY IMPAIRED SHALL BE AS FOLLOWS: (11124A.3.3.2, 116B.1.9, FIG 11A-7B & FIG 11B-40B)
   I. PASSENGER ELEVATOR CAR CONTROLS SHALL HAVE A MINIMUM DIMENSION OF ¾" AND SHALL BE RAISED 1/8" + 1/32" ABOVE THE SURROUNDING SURFACE.
   II. CONTROL BUTTONS SHALL BE ILLUMINATED, SHALL HAVE SQUARE SHOULDERS, AND SHALL BE ACTIVATED BY A MECHANICAL MOTION THAT IS DETECTABLE.
   III. ALL CONTROL BUTTONS SHALL BE DESIGNATED BY A 5/8" MINIMUM, ARABIC NUMERAL, STANDARD ALPHABET CHARACTER, OR STANDARD SYMBOL IMMEDIATELY TO THE LEFT OF THE CONTROL BUTTON.
   IV. A BRAILLE SYMBOL SHALL BE LOCATED IMMEDIATELY BELOW THE NUMERAL, CHARACTER, OR SYMBOL.
   V. A MINIMUM CLEAR SPACE OF 3/8" OR OTHER SUITABLE MEANS OF SEPARATION SHALL BE PROVIDED BETWEEN ROWS OF CONTROL BUTTONS.
   VI. THE RAISED CHARACTER SHALL BE WHITE ON A BLACK BACKGROUND.
   VII. CONTROLS AND EMERGENCY EQUIPMENT IDENTIFIED BY RAISED SYMBOLS SHALL INCLUDE, BUT NOT BE LIMITED TO, "DOOR OPEN", "DOOR CLOSE", "ALARM BELL", "EMERGENCY STOP", AND "TELEPHONE".
   VIII. THE CALL BUTTON FOR THE MAIN ENTRY FLOOR SHALL BE DESIGNATED BY A RAISED STAR AT THE LEFT OF THE FLOOR DESIGNATION
   G. A VISUAL AND AUDIBLE SIGNAL SHALL BE PROVIDED AT EACH HOIST WAY ENTRANCE INDICATING TO THE PROSPECTIVE PASSENGER THE CAR ANSWERING THE CALL AND ITS DIRECTION OF TRAVEL AS FOLLOWS: (1124A.6, 1116B.1.13)
   I. THE VISUAL SIGNAL FOR EACH DIRECTION SHALL BE A MINIMUM OF 2-1/2" HIGH BY 2-1/2" WIDE, AND VISIBLE FROM THE PROXIMITY OF THE HALL CALL BUTTON.
   II. THE AUDIBLE SIGNAL SHALL SOUND ONCE FOR THE "UP" DIRECTION AND TWICE FOR THE "DOWN" DIRECTION OR OF A CONFIGURATION, WHICH DISTINGUISHES BETWEEN UP AND DOWN ELEVATOR TRAVEL.
   III. THE CENTERLINE OF THE FIXTURE SHALL BE LOCATED A MINIMUM OF 6' IN HEIGHT FROM THE LOBBY FLOOR.
   H. THE USE OF IN-CAR LANTERNS, LOCATED IN OR ON THE CAR DOORJAMBS, VISIBLE FROM THE PROXIMITY OF THE HALL CALL BUTTON AND CONFORMING TO SECTIONS 1124A.6 OR 1116B.1.13 WILL BE ACCEPTABLE. (1110A.6, 1116B.1.13)
   I. THE USE OF ARROW SHAPES IS PREFERRED FOR VISIBLE SIGNALS (1124A.6, 1116B.1.13)
   J. PASSENGER ELEVATOR LANDING JAMBS ON ALL ELEVATOR FLOORS SHALL HAVE THE NUMBER OF THE FLOOR ON WHICH THE JAMB IS LOCATED DESIGNATED BY RAISED CHARACTERS THAT ARE A MINIMUM OF 2" IN HEIGHT AND CONFORM TO SECTION 1117B.5.5 AND GRADE 2 BRAILLE THAT CONFORMS TO SECTION 1117.5.6, LOCATED 60" ON CENTER ABOVE THE FLOOR ON THE JAMB PANELS ON BOTH SIDES OF THE DOOR SO THAT THEY ARE VISIBLE FROM WITHIN THE ELEVATOR. ON THE GRADE LEVEL, A RAISED FIVE-POINTED STAR SHALL BE PLACED TO THE LEFT OF THE RAISED CHARACTER. THE OUTSIDE DIAMETER OF THE STAR SHALL BE 2 INCHES. BRAILLE SHALL BE PLACED BELOW THE CORRESPONDING RAISED CHARACTERS. (1124A.8, 1116B.1.14)
   K. POWER-OPERATED HORIZONTALLY SLIDING CAR AND HOIST WAY DOORS OPENED AND CLOSED BY AUTOMATIC MEANS SHALL BE PROVIDED. (1116B.1.3)
   L. DOORS CLOSED BY AUTOMATIC MEANS SHALL BE PROVIDED WITH A DOOR REOPENING DEVICE WHICH WILL FUNCTION TO STOP AND REOPEN A CAR DOOR AND ADJACENT HOIST WAY DOOR IN CASE THE CAR DOOR IS OBSTRUCTED WHILE CLOSING. THIS REOPENING DEVICE SHALL ALSO BE CAPABLE OF SENSING AN OBJECT OR PERSON IN THE PATH OF THE CLOSING DOOR WITHOUT REQUIRING CONTACT FOR ACTIVATION AT A NORMAL 5" AND 29" ABOVE THE FLOOR. DOOR REOPENING DEVICES SHALL REMAIN EFFECTIVE FOR A PERIOD OF NOT LESS THAN 20 SECONDS. AFTER SUCH AN INTERVAL THE DOORS MAY CLOSE IN ACCORDANCE WITH THE REQUIREMENTS OF ANSI 17.1-86 OF THE AMERICAN SOCIETY OF MECHANICAL ENGINEERS. (ASME) DOCUMENT ASME 17.1-1900. (1124A.9, 1116B.1.5, FIG 11A-7B & FIG 11B-40B)
   M. THE MINIMUM ACCEPTABLE TIME FROM NOTIFICATION THAT A CAR IS ANSWERING A CALL (LANTERN AND AUDIBLE SIGNAL) UNTIL THE DOORS OF THE CAR START TO CLOSE SHALL BE CALCULATED IN ACCORDANCE WITH SECTIONS 1124A.7.1 AND 1116B.1.6. (1124A.7.1, 1116B.1.6., FIG 11A-7C & FIG 11B-40C)
   N. FOR CARS WITH IN-CAR LANTERNS, THE TOTAL TIME, T, AS CALCULATED IN ACCORDANCE WITH SECTION 1116B.1.6 BEGINS WHEN THE LANTERN IS VISIBLE FROM THE VICINITY OF HALL CALL BUTTONS AND AN AUDIBLE SIGNAL IS SOUNDED. (1124A.7.1, 1116B.1.6, FIG 11A-7C & FIG 11B-40C)
   O. THE MINIMUM ACCEPTABLE TIME FOR DOORS TO REMAIN FULLY OPEN SHALL NOT BE LESS THAN 5 SECONDS. (1124A.7.2, 1116B.1.7)
   P. THE ELEVATOR SHALL BE AUTOMATIC AND BE PROVIDED WITH A SELF-LEVELING FEATURE THAT WILL AUTOMATICALLY BRING THE CAR TO THE FLOOR LANDINGS WITH A TOLERANCE OF + ½" UNDER NORMAL LOADING AND UNLOADING CONDITIONS. THIS SELF-LEVELING SHALL, WITHIN ITS ZONE, BE ENTIRELY AUTOMATIC AND INDEPENDENT OF THE OPERATING DEVICE AND SHALL CORRECT THE OVER-TRAVEL OR UNDER-TRAVEL. THE CAR SHALL ALSO BE MAINTAINED APPROXIMATELY LEVEL WITH THE LANDING IRRESPECTIVE OF LOAD. THE CLEARANCE BETWEEN THE CAR PLATFORM SILL AND THE EDGE OF THE HOIST WAY LANDING SHALL BE NO GRATER THAN 1-1/4". (1124A.10, 1116B.1.2)

## ACCESSIBILITY NOTES

1115B.3.2 SINGLE-ACCOMMODATION TOILET FACILITIES.
SINGLE-ACCOMMODATION TOILET FACILITIES SHALL HAVE THE FOLLOWING:

1. WHEELCHAIR CLEARANCE. THERE SHALL BE SUFFICIENT SPACE IN THE TOILET ROOM FOR A WHEELCHAIR MEASURING 30 INCHES (762 MM) WIDE BY 48 INCHES (1219 MM) LONG TO ENTER THE ROOM AND PERMIT THE DOOR TO CLOSE. THERE SHALL BE IN THE ROOM A CLEAR FLOOR SPACE OF AT LEAST 60 INCHES (1524 MM) IN DIAMETER, OR A T-SHAPED SPACE COMPLYING WITH FIGURE 11B-12 (A) AND (B). NO DOOR SHALL ENCROACH INTO THIS SPACE FOR MORE THAN 12 INCHES (305 MM). SEE FIGURE 11B-1A.
2. CLEAR FLOOR SPACE AT FIXTURES. DOORS SHALL NOT SWING INTO THE CLEAR FLOOR SPACE REQUIRED FOR ANY FIXTURE.
3. ACCESSIBLE WATER CLOSET. PROVIDE ONE ACCESSIBLE WATER CLOSET IN COMPLIANCE WITH SECTION 1115B.4.1.
4. ACCESSIBLE ROUTE. ALL DOORS, FIXTURES AND CONTROLS SHALL BE ON AN ACCESSIBLE ROUTE. THE MINIMUM CLEAR WIDTH OF AN ACCESSIBLE ROUTE SHALL BE 36 INCHES (914 MM) EXCEPT AT DOORS (SEE SECTION 1133B.2). IF A PERSON IN A WHEELCHAIR MUST MAKE A TURN AROUND AN OBSTRUCTION, THE MINIMUM CLEAR WIDTH OF THE ACCESSIBLE ROUTE SHALL BE AS SHOWN IN FIGURE 11B-5E. SEE ALSO FIGURE 11B-1A.
5. INTERIOR SURFACES. IN OTHER THAN DWELLING UNITS, TOILET ROOM FLOOR SHALL HAVE A SMOOTH, HARD, NONABSORBENT SURFACE SUCH AS PORTLAND CEMENT, CONCRETE, CERAMIC TILE OR OTHER APPROVED MATERIAL WHICH EXTENDS UPWARD ONTO THE WALLS AT LEAST 5 INCHES (127 MM). WALLS WITHIN WATER CLOSET COMPARTMENTS AND WALLS WITHIN 24 INCHES (610 MM) OF THE FRONT AND SIDES OF URINALS SHALL BE SIMILARLY FINISHED TO A HEIGHT OF 48 INCHES (1219 MM) AND, EXCEPT FOR STRUCTURAL ELEMENTS, THE MATERIALS USED IN SUCH WALLS SHALL BE A TYPE WHICH IS NOT ADVERSELY AFFECTED BY MOISTURE.
6. ACCESSIBLE LABORATORY. PROVIDE ONE ACCESSIBLE LAVATORY IN COMPLIANCE WITH SECTION 1115B.4.3.
7. PRIVACY LATCH. THE ENTRANCE DOOR SHALL CONTAIN A PRIVACY LATCH WITH COMPLIES WITH SECTION 1117B.6, CONTROLS AND OPERATING MECHANISMS FOR BATHROOMS SERVING RESIDENTIAL OCCUPANCIES, SEE SECTION 1111B.4.6 AND CHAPTER 11A.

1115B.4 ACCESSIBLE FIXTURES.

1115B.4.1 ACCESSIBLE WATER CLOSETS. WATER CLOSETS REQUIRED TO BE ACCESSIBLE SHALL COMPLY WITH THIS SUBSECTION:
1. THE CENTERLINE OF THE WATER CLOSET FIXTURE SHALL BE 18 INCHES (457 MM) FROM THE SIDE WALL OR PARTITION. ON THE OTHER SIDE OF THE WATER CLOSET, PROVIDE A MINIMUM OF 28 INCHES (711 MM) WIDE CLEAR FLOOR SPACE IF THE WATER CLOSET IS ADJACENT TO A FIXTURE OR A MINIMUM OF 32 INCHES (813 MM) WIDE CLEAR FLOOR SPACE IF THE WATER CLOSET IS ADJACENT TO A WALL OR PARTITION. THIS CLEAR FLOOR SPACE SHALL EXTEND FROM THE REAR WALL TO THE FRONT OF THE WATER CLOSET.
2. A MINIMUM 60 INCHES (1524 MM) WIDE AND 48 INCHES (1219 MM) DEEP CLEAR FLOOR SPACE SHALL BE PROVIDED IN FRONT OF THE WATER CLOSET.
3. GRAB BARS FOR WATER CLOSETS NOT LOCATED WITHIN A COMPARTMENT SHALL COMPLY WITH SECTION 1115B.7 AND SHALL BE PROVIDED ON THE SIDE WALL CLOSEST TO THE WATER CLOSET AND ON THE REAR WALL. GRAB BARS FOR WATER CLOSETS LOCATED WITHIN AN ACCESSIBLE COMPARTMENT SHALL COMPLY WITH SECTION 1115B.7 AND SHALL BE PROVIDED ON THE SIDE WALL CLOSEST TO THE WATER CLOSET AND ON THE REAR WALL. GRAB BARS FOR WATER CLOSETS LOCATED WITHIN AMBULATORY ACCESSIBLE COMPARTMENTS SHALL COMPLY WITH SECTION 1115B.7 AND SHALL BE PROVIDED ON BOTH SIDES OF THE COMPARTMENT.
GRAB BARS SHALL NOT PROJECT MORE THAN 3 INCHES (76 MM) INTO THE REQUIRED CLEAR FLOOR SPACE.
   3.1 SIDE WALL. THE SIDE GRAB BAR SHALL BE 42 INCHES (1067 MM) LONG MINIMUM, LOCATED 12 INCHES (305 MM) MAXIMUM FROM THE REAR WALL AND EXTEND 54 INCHES (1372 MM) MINIMUM FROM THE REAR WALL WITH THE FRONT END POSITIONED 24 INCHES (610 MM) MINIMUM IN FRONT OF THE WATER CLOSET. THE SIDE GRAB BAR SHALL BE SECURELY ATTACHED AND CENTERED 33 INCHES (838 MM) ABOVE AND PARALLEL TO THE FLOOR.
   3.2 REAR WALL. THE REAR GRAB BAR SHALL BE 36 INCHES (914 MM) LONG MINIMUM AND EXTEND FROM THE CENTERLINE OF THE WATER CLOSET 12 INCHES (305 MM) MINIMUM ON ONE SIDE AND 24 INCHES (610 MM) MINIMUM ON THE OTHER SIDE. THE REAR GRAB BAR SHALL BE SECURELY ATTACHED AND CENTERED 33 INCHES (838 MM) ABOVE AND PARALLEL TO THE FLOOR, EXCEPT THAT WHERE A TANK-TYPE TOILET IS USED WHICH OBSTRUCTS PLACEMENT AT 33 INCHES (838 MM), THE GRAB BAR MAY BE AS HIGH AS 36 INCHES (914 MM) AND THE SPACE BETWEEN THE GRAB BAR AND THE TOP OF THE TANK SHALL BE 1 ½ INCHES (38 MM) MINIMUM.
4. THE HEIGHT OF ACCESSIBLE WATER CLOSETS SHALL BE A MINIMUM OF 17 INCHES (432 MM) AND A MAXIMUM OF 19 INCHES (483 MM) MEASURED TO THE TOP OF A MAXIMUM 2-INCH (51 MM) HIGH TOILET SEAT.
   EXCEPTION: A 3-INCH (76 MM) HIGH SEAT SHALL BE PERMITTED ONLY IN ALTERATIONS WHERE THE EXISTING FIXTURE IS LESS THAN 15 INCHES (381 MM) HIGH.
5. CONTROLS SHALL BE OPERABLE WITH ONE HAND AND SHALL NOT REQUIRE TIGHT GRASPING, PINCHING OR TWISTING. CONTROLS FOR THE FLUSH VALVES SHALL BE MOUNTED ON THE WIDE SIDE OF TOILET AREAS, NOT MORE THAN 44 INCHES (1118 MM) ABOVE THE FLOOR. THE FORCE REQUIRED TO ACTIVATE CONTROLS SHALL BE NO GREATER THAN 5 POUNDS-FORCE (LBF) (22.2 N).
6. SEE SECTION 1134A.7 FOR ADDITIONAL REQUIREMENTS FOR WATER CLOSETS IN PUBLICLY FUNDED HOUSING AND ALL NON-RESIDENTIAL OCCUPANCIES.
7. AUTOMATIC SPRING TO LIFTED POSITION SEATS ARE NOT ALLOWED.

1115B.4.3 ACCESSIBLE LAVATORIES.
LAVATORIES REQUIRED TO BE ACCESSIBLE SHALL COMPLY WITH THIS SUBSECTION. THE REQUIREMENTS OF THIS SUBSECTION SHALL APPLY TO LAVATORY FIXTURES, VANITIES AND BUILT-IN LAVATORIES.

1. FAUCET CONTROLS AND OPERATING MECHANISMS SHALL BE OPERABLE WITH ONE HAND IN ACCORDANCE WITH THIS CHAPTER AND SHALL NOT REQUIRE TIGHT GRASPING, PINCHING OR TWISTING OF THE WRIST. THE FORCE REQUIRED TO ACTIVATE CONTROLS SHALL BE NO GREATER THAN 5 LBF (22.2 N). LEVER-OPERATED, PUSH-TYPE AND ELECTRONICALLY CONTROLLED MECHANISMS (PREFERABLE) ARE EXAMPLES OF ACCEPTABLE DESIGNS. SELF-CLOSING VALVES ARE ALLOWED IF THE FAUCET REMAINS OPEN FOR AT LEAST 10 SECONDS.
2. LAVATORIES, WHEN LOCATED ADJACENT TO A SIDE WALL OR PARTITION, SHALL BE A MINIMUM OF 18 INCHES (457 MM) TO THE CENTERLINE OF THE FIXTURE. ALL LAVATORIES THAT ARE DESIGNED TO BE ACCESSIBLE SHALL BE A MINIMUM 17 INCHES (432 MM) IN HORIZONTAL DEPTH AND MOUNTED WITH THE RIM OR COUNTER EDGE NO HIGHER THAN 34 INCHES (864 MM) ABOVE THE FINISHED FLOOR AND WITH VERTICAL CLEARANCE MEASURED FROM THE BOTTOM OF THE APRON OR THE OUTSIDE BOTTOM EDGE OF THE LAVATORY OF 29 INCHES (737 MM) REDUCING TO 27 INCHES (686 MM) AT A POINT LOCATED 8 INCHES (203 MM) BACK FROM THE FRONT EDGE. IN ADDITION, A MINIMUM 9-INCH-HIGH (230 MM) TOE CLEARANCE MUST BE PROVIDED EXTENDING BACK TOWARD THE WALL TO A DISTANCE NO MORE THAN 6 INCHES (150 MM) FROM THE BACK WALL. THE TOE CLEARANCE SPACE MUST BE FREE OF EQUIPMENT OR OBSTRUCTIONS.
3. A CLEAR FLOOR SPACE 30 INCHES BY 48 INCHES (762 MM BY 1219 MM) COMPLYING WITH SECTION 1118B.4 SHALL BE PROVIDED IN FRONT OF A LAVATORY TO ALLOW FORWARD APPROACH. SUCH CLEAR FLOOR SPACE SHALL ADJOIN OR OVERLAP AN ACCESSIBLE ROUTE AND SHALL EXTEND A MAXIMUM OF 19 INCHES (483 MM) INTO KNEE AND TOE SPACE UNDERNEATH THE LAVATORY. SEE FIGURE 11B-1D, KNEE CLEARANCE.
4. HOT WATER AND DRAINPIPES ACCESSIBLE UNDER LAVATORIES SHALL BE INSULATED OR OTHERWISE COVERED. THERE SHALL BE NO SHARP OR ABRASIVE SURFACES UNDER LAVATORIES.

1115B.5 PASSAGEWAYS.
PASSAGEWAYS LEADING TO SANITARY FACILITIES SHALL HAVE A CLEAR ACCESS. ALL DOORWAYS LEADING TO SUCH SANITARY FACILITIES SHALL COMPLY WITH SECTION 1133B.2., DOORS. DOORS SHALL NOT SWING INTO THE CLEAR FLOOR SPACE REQUIRED FOR ANY FIXTURE. ACCESSIBLE FIXTURES AND CONTROLS SHALL BE ON AN ACCESSIBLE ROUTE.

1115B.6 IDENTIFICATION SYMBOLS.
DOORWAYS LEADING TO SANITARY FACILITIES SHALL BE IDENTIFIED BY A GEOMETRIC SYMBOL IN COMPLIANCE WITH THIS SECTION. GEOMETRIC SYMBOLS SHALL BE CENTERED HORIZONTALLY ON THE DOOR AT A HEIGHT OF 60 INCHES (1524 MM) ABOVE THE FINISH FLOOR OR GROUND SURFACE MEASURED TO THE CENTER OF THE SYMBOL. EDGES OF SIGNS SHALL BE ROUNDED, CHAMFERED OR EASED. CORNERS OF SIGNS SHALL HAVE A MINIMUM RADIUS OF 1/8 INCH (3.2 MM). SEE SECTION 1117B.5.1, ITEM 1 FOR ADDITIONAL SIGNAGE REQUIREMENTS APPLICABLE TO SANITARY FACILITIES.
1115B.6.3UNISEX SANITARY FACILITIES SHALL BE IDENTIFIED BY A CIRCLE ¼ INCH (6.4 MM) THICK AND 12 INCHES (305 MM) IN DIAMETER WITH A ¼ INCH (6.4 MM) THICK TRIANGLE SUPERIMPOSED ON THE CIRCLE AND WITHIN THE 12-INCH (305 MM) DIAMETER. THE TRIANGLE SYMBOL SHALL CONTRAST WITH THE CIRCLE SYMBOL, EITHER LIGHT ON A DARK BACKGROUND OR DARK ON A LIGHT BACKGROUND. THE CIRCLE SYMBOL SHALL CONTRAST WITH THE DOOR, EITHER LIGHT ON A DARK BACKGROUND OR DARK ON A LIGHT BACKGROUND.

1115B.7 GRAB BARS, TUB AND SHOWER SEATS.
ALL GRAB BARS, TUB AND SHOWER SEATS SHALL COMPLY WITH THIS SECTION.
1115B.7.1 DIAMETER OR WIDTH. THE DIAMETER OR WIDTH OF THE GRIPPING SURFACES OF A GRAB BAR SHALL BE 1 ¼ INCHES TO 1 ½ INCHES (32 MM TO 38 MM) OR THE SHAPE SHALL PROVIDE AN EQUIVALENT GRIPPING SURFACE. IF GRAB BARS ARE MOUNTED ADJACENT TO A WALL, THE SPACE BETWEEN THE WALL AND THE GRAB BARS SHALL BE 1 ½ INCHES (38 MM). SEE FIGURE 11B-1C.
1115B.7.2 STRUCTURAL STRENGTH. THE STRUCTURAL STRENGTH OF GRAB BARS, TUB AND SHOWER SEATS, FASTENERS AND MOUNTING DEVICES SHALL MEET THE FOLLOWING SPECIFICATIONS:

1. BENDING STRESS IN A GRAB BAR OR SEAT INDUCED BY THE MAXIMUM BENDING MOMENT FROM THE APPLICATION OF A 250-POUND (1112 N) POINT LOAD SHALL BE LESS THAN THE ALLOWABLE STRESS FOR THE MATERIAL OF THE GRAB BAR OR SEAT.
2. SHEAR STRESS INDUCED IN A GRAB BAR OR SEAT BY THE APPLICATION OF A 250-POUND (1112 N) POINT LOAD SHALL BE LESS THAN THE ALLOWABLE SHEAR STRESS FOR THE MATERIAL OF THE GRAB BAR OR SEAT, AND ITS MOUNTING BRACKET OR OTHER SUPPORT IS CONSIDERED TO BE FULLY RESTRAINED, THEN DIRECT AND TORSIONAL SHEAR STRESSES SHALL NOT EXCEED THE ALLOWABLE SHEAR STRESS.
3. SHEAR FORCE INDUCED IN A FASTENER OR MOUNTING DEVICE FROM THE APPLICATION OF A 250-POUND (1112 N) POINT LOAD SHALL BE LESS THAN THE ALLOWABLE LATERAL LOAD OF EITHER THE FASTENER OR MOUNTING DEVICE OF THE SUPPORTING STRUCTURE, WHICHEVER IS THE SMALLER ALLOWABLE LOAD.
4. TENSILE FORCE INDUCED IN A FASTENER BY A DIRECT TENSION FORCE OF A 250-POUND (1112 N) POINT LOAD, PLUS THE MAXIMUM MOMENT FROM THE APPLICATION OF A 250-POUND (1112 N) POINT LOAD, SHALL BE LESS THAN THE ALLOWABLE WITHDRAWAL LOAD BETWEEN THE FASTENER AND SUPPORTING STRUCTURE.
5. GRAB BARS SHALL NOT ROTATE WITHIN THEIR FITTINGS.

1115B.7.3 SURFACE. A GRAB BAR AND ANY WALL OR OTHER SURFACE ADJACENT TO IT SHALL BE FREE OF ANY SHARP OR ABRASIVE ELEMENTS. EDGES SHALL HAVE A MINIMUM RADIUS OF 1/8 INCH (3.2 MM).

1115B.8 ACCESSORIES.
1115B.8.3 TOWEL, SANITARY NAPKINS, WASTE RECEPTACLES, DISPENSERS AND CONTROLS. WHERE TOWEL, SANITARY NAPKINS, WASTE RECEPTACLES, DISPENSERS, OTHER EQUIPMENT AND CONTROLS ARE PROVIDED, AT LEAST ONE OF EACH TYPE SHALL BE LOCATED ON AN ACCESSIBLE ROUTE, WITH ALL OPERABLE PARTS, INCLUDING COIN SLOTS, WITH 40 INCHES (1016 MM) FROM THE FINISHED FLOOR AND SHALL COMPLY WITH SECTION 1117B.6, CONTROLS AND OPERATING MECHANISMS.
1115.8.4 TOILET TISSUE DISPENSERS. TOILET TISSUE DISPENSERS SHALL BE LOCATED ON THE WALL WITHIN 12 INCHES (305 MM) OF THE FRONT EDGE OF THE TOILET SEAT, MOUNTED BELOW THE GRAB BAR, AT A MINIMUM HEIGHT OF 19 INCHES (485 MM) AND 36 INCHES (914 MM) MAXIMUM TO THE FAR EDGE FROM THE REAR WALL. DISPENSERS THAT CONTROL DELIVERY OR THAT DO NOT PERMIT CONTINUOUS PAPER FLOW SHALL NOT BE USED. SEE FIGURE 11B.1A.
1115B.8.5 LOCKERS. WHERE LOCKERS ARE PROVIDED FOR THE PUBLIC, CLIENTS, EMPLOYEES, MEMBERS OR PARTICIPANTS, AT LEAST ONE LOCKER AND NOT LESS THAN 1 PERCENT OF ALL LOCKERS SHALL BE MADE ACCESSIBLE TO PERSONS WITH DISABILITIES. A PATH OF TRAVEL NOT LESS THAN 36 INCHES (914 MM) IN CLEAR WIDTH SHALL BE PROVIDED TO THESE LOCKERS.

1117B.6.5.1
CONTROLS AND SWITCHES INTENDED TO BE USED BY THE OCCUPANT OF THE ROOM OR AREA TO CONTROL LIGHTING AND RECEPTACLE OUTLETS, APPLIANCES, OR COOLING, HEATING, AND VENTILATING EQUIPMENT, SHALL BE LOCATED NO MORE THAN 48 INCHES MEASURED FROM THE TOP OF THE OUTLET BOX NOR LESS THAN 15 INCHES MEASURED FROM THE BOTTOM OF THE OUTLET BOX TO THE LEVEL OF THE FINISH FLOOR OR WORKING PLATFORM.

1117B.6.5.2
ELECTRICAL RECEPTACLE OUTLETS ON BRANCH CIRCUITS OF 30 AMPERES OR LESS AND COMMUNICATION SYSTEM RECEPTACLES SHALL BE LOCATED NO MORE THAN 48 INCHES MEASURED FROM THE TOP OF THE RECEPTACLE OUTLET BOX OR RECEPTACLE HOUSING NOR LESS THAN 15 INCHES MEASURED FROM THE BOTTOM OF THE RECEPTACLE OUTLET BOX OR RECEPTACLE HOUSING TO THE LEVEL OF THE FINISH FLOOR OR WORKING PLATFORM.

**County of San Diego**
**Cedar & Kettner**
**Development Project**
San Diego, California


McCARTHY
20401 S.W. BIRCH STREET SUITE 300
Newport Beach, California 92660

Architect
IPD
Alameda
Irvine
Los Angeles
Architecture / Engineering / Consulting
www.ipd-global.com
2 Faraday, Suite 101, Irvine CA 92618
Phone 949 595 8004 Fax 949 595 8011


| Revision | | Date |
|---|---|---|
| 100% DESIGN DEVELOPMENT | | 10/23/13 |
| 90% | CDs - 1ST PLAN CHECK | 12/24/13 |
| | 2ND PLAN CHECK | 04/23/14 |

| | |
|---|---|
| Date | |
| IPD Job No. | 13-813 |
| Drawn By | SN |
| Checked By | |
| Scale | AS SHOWN |

CONSTRUCTION DOCUMENTS

Drawing Title
ACCESSIBILITY/ ELEVATOR NOTES AND DETAILS

Drawing No.
**A0.05**

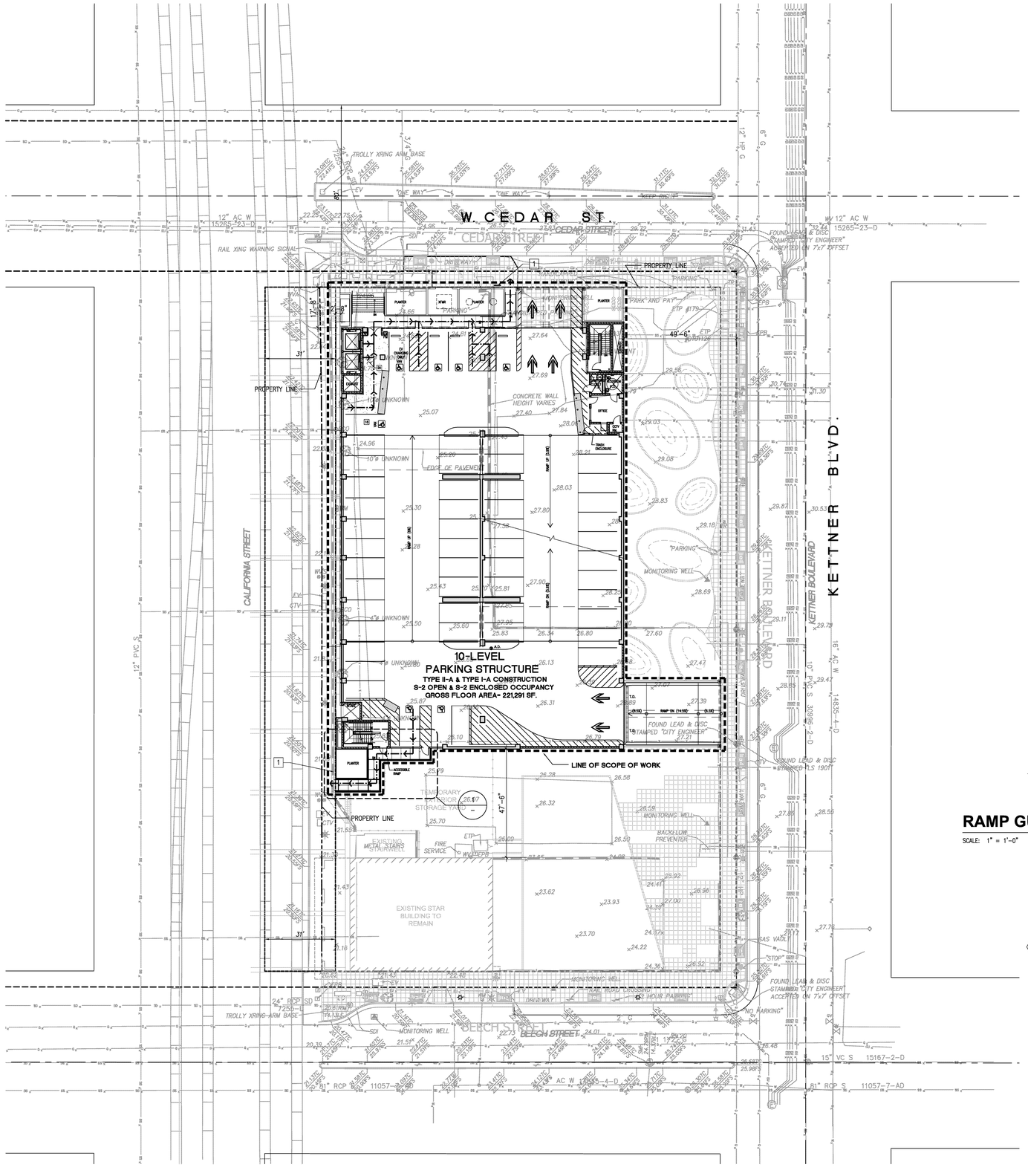


## KEY NOTES

1. SEE DETAIL 19/A9.01 FOR SITE ACCESS SIGNAGE

## LEGEND:

(PER SECTION 1133B.7): "PATH OF TRAVEL (P.O.T.) AS INDICATED IS A BARRIER FREE ACCESS ROUTE WITHOUT ANY ABRUPT VERTICAL CHANGES EXCEEDING 1/2" BEVELED AT 1:2 MAXIMUM SLOPE, EXCEPT THAT LEVEL CHANGES DO NOT EXCEED 1/4" VERTICAL AND IS AT LEAST 48" WIDE. SURFACE IS SLIP RESISTANT, STABLE, FIRM, AND SMOOTH. CROSS-SLOPE DOES NOT EXCEED 2% AND SLOPE IN THE DIRECTION OF TRAVEL IS LESS THAN 5% UNLESS OTHERWISE INDICATED. (POT) SHALL BE MAINTAINED FREE OF OVERHANGING OBSTRUCTIONS TO 80" MINIMUM (1133B.8.2) AND PROTRUDING OBJECTS GREATER THAN 4" PROJECTION FROM WALL AND ABOVE 27" AND LESS THAN 80" (1133B.8.6). CONTRACTOR TO VERIFY THAT THERE ARE NO BARRIERS IN THE PATH OF TRAVEL, AND THE PATH OF TRAVEL COMPLIES WITH CBC 1133B.

## SITE PLAN

SCALE: 1:20

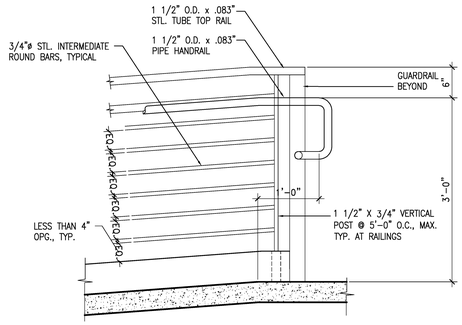


## RAMP DETAIL

SCALE: 1" = 1'-0"

3

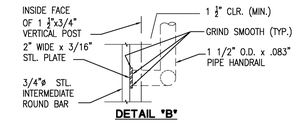


**DETAIL "B"**

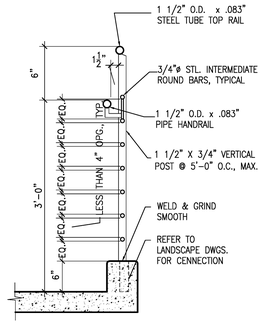


## RAMP GUARDRAIL DETAIL

SCALE: 1" = 1'-0"

4

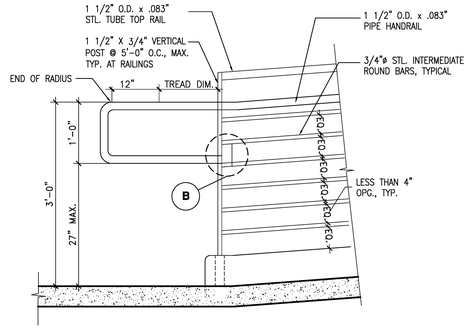


## RAMP DETAIL

SCALE: 1" = 1'-0"

2

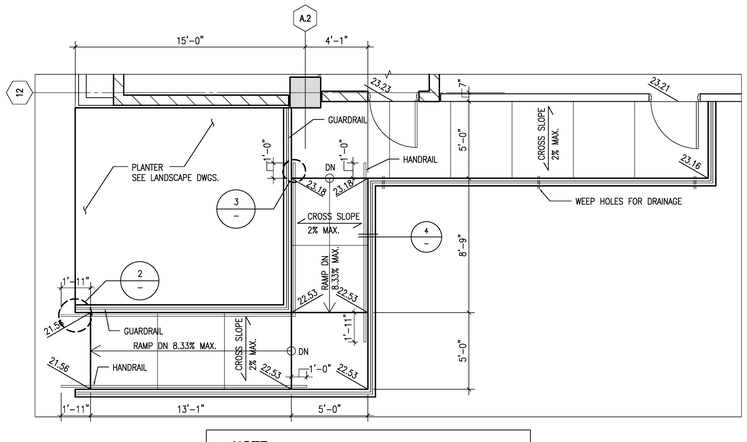


## ENLARGED PLAN

SCALE: 1/4" = 1'-0"

1

## NOTE:

1. SEE LANDSCAPE DRAWINGS FOR RAMP CURB AND RAILING INFORMATION
2. REFER TO SHEET A7.01 FOR GUARDRAIL AND HANDRAIL DETAILS

N

**County of San Diego**
**Cedar & Kettner**
**Development Project**
San Diego, California

McCARTHY

20401 S.W. BIRCH STREET SUITE 300
Newport Beach, California 92660

Architect

IPD

Alameda
Irvine
Los Angeles

Architecture / Engineering / Consulting
www.ipd-global.com

2 Faraday, Suite 101, Irvine CA 92618
Phone 949 595 8004 Fax 949 595 8011

| Revision | Date |
|---|---|
| 100% DESIGN DEVELOPMENT | 10/23/13 |
| 90% CDs - 1ST PLAN CHECK | 12/24/13 |
| 2ND PLAN CHECK | 04/23/14 |

| | |
|---|---|
| Date | |
| IPD Job No. | 13-813 |
| Drawn By | MP |
| Checked By | |
| Scale | AS SHOWN |

CONSTRUCTION DOCUMENTS

Drawing Title
SITE PLAN

Drawing No.
**A1.01**

IPD, Inc.

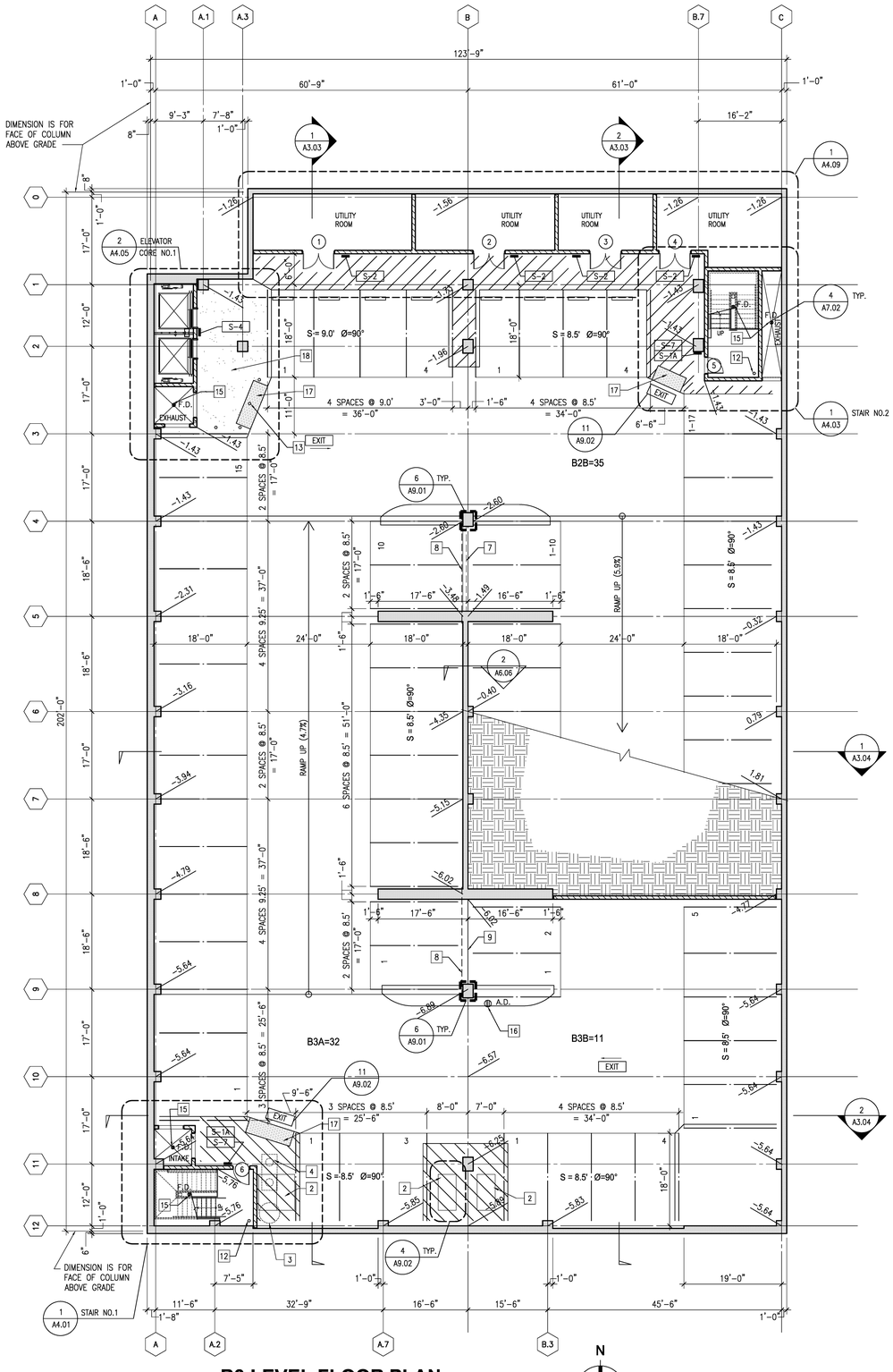


## B3 LEVEL FLOOR PLAN

SCALE: 3/32" = 1'-0"

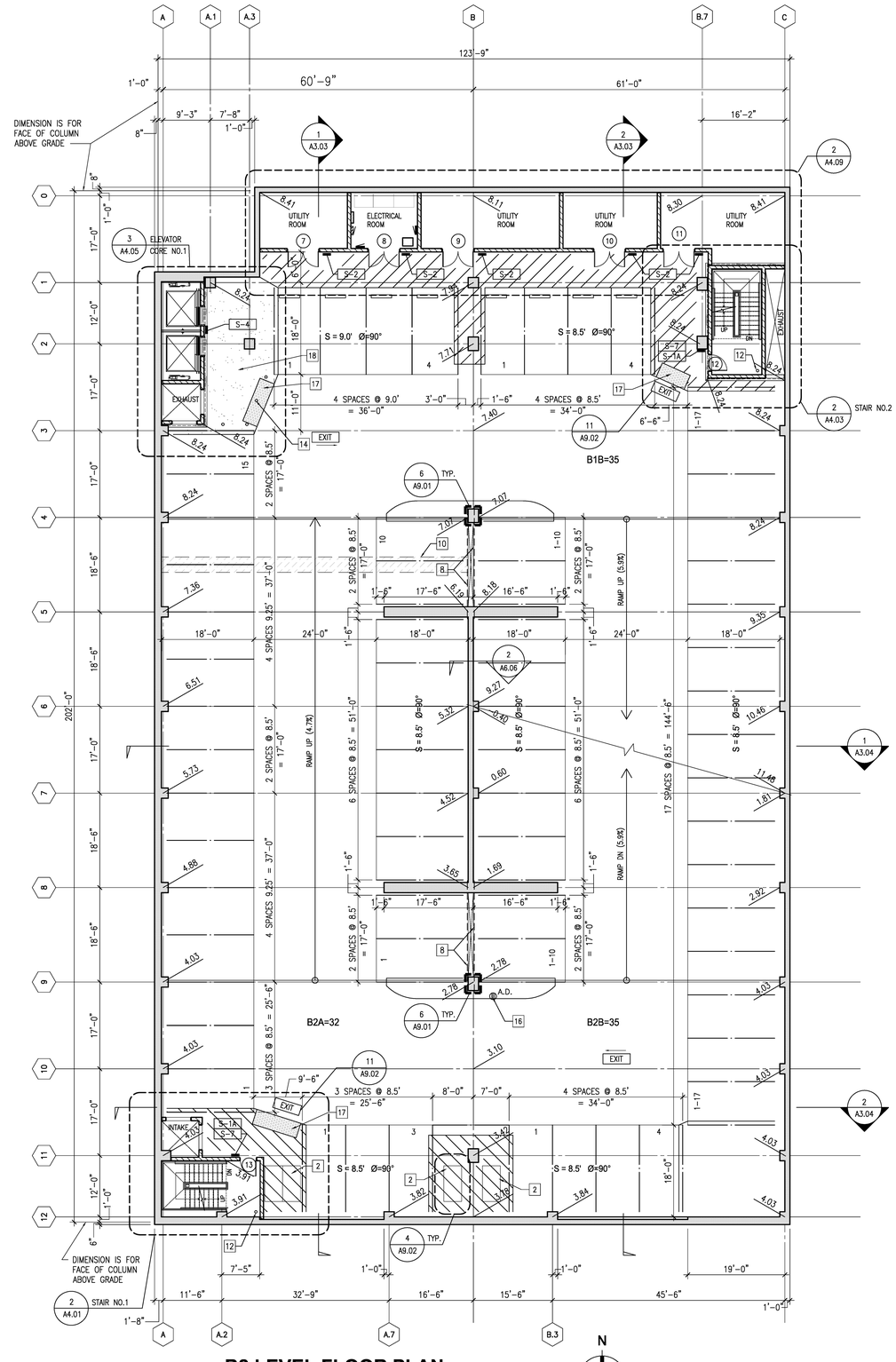


## B2 LEVEL FLOOR PLAN

SCALE: 3/32" = 1'-0"

KEY NOTES:

| | | | | | | | | | | | |
|---|---|---|---|---|---|---|---|---|---|---|---|
| 1 | POWER PROVISIONS FOR ELECTRICAL VEHICLE CHARGING STATION (PEDESTAL MOUNT (PM) OR WALL MOUNT (WM)) | 4 | SAND OIL INTERCEPTOR (SEE PLUMBING DWGS.) | 7 | LINE OF RETAINING WALL BELOW | 10 | POUR STRIP, SEE 6/A7.02 | 13 | BOLLARD, SEE 10/A7.02 | 16 | AREA DRAIN, SEE PLUMBING DRAWINGS |
| 2 | MOTORCYCLE PARKING SPACE | 5 | SECURITY SCREEN SET IN ALUMINUM STOREFRONT FRAME | 8 | CABLE BARRIER, SEE DETAIL 9/A7.02 | 11 | CONSTRUCTION JOINT, SEE 12/A7.02 | 14 | BOLLARD, SEE 11/A7.02 | 17 | SURFACE APPLIED DETECTABLE WARNING STRIP, 2/A7.02 |
| 3 | SEWAGE EJECTOR (SEE PLUMBING DWGS.) | 6 | LINE OF CMU WALL BELOW | 9 | STRIPING, SEE SHEET A9.02 FOR DETAILS | 12 | COMBINATION STANDPIPE | 15 | FLOOR DRAIN, SEE PLUMBING DRAWINGS | 18 | MEDIUM BROOM FINISH |

**County of San Diego**
**Cedar & Kettner**
**Development Project**
San Diego, California

McCARTHY
20401 S.W. BIRCH STREET SUITE 300
Newport Beach, California 92660

Architect
IPD
Alameda
Irvine
Los Angeles
Architecture / Engineering / Consulting
www.ipd-global.com
2 Faraday, Suite 101, Irvine CA 92618
Phone 949 595 8004 Fax 949 595 8011

| Revision | Date |
|---|---|
| 100% DESIGN DEVELOPMENT | 10/23/13 |
| 90% CDs - 1ST PLAN CHECK | 12/24/13 |
| 2ND PLAN CHECK | 04/23/14 |

| | |
|---|---|
| Date | |
| IPD Job No. | 13-813 |
| Drawn By | MS |
| Checked By | |
| Scale | 3/32" = 1'-0" |

CONSTRUCTION DOCUMENTS

Drawing Title
B3 AND B2 LEVEL PLANS

Drawing No.
**A2.01**

IPD, Inc.

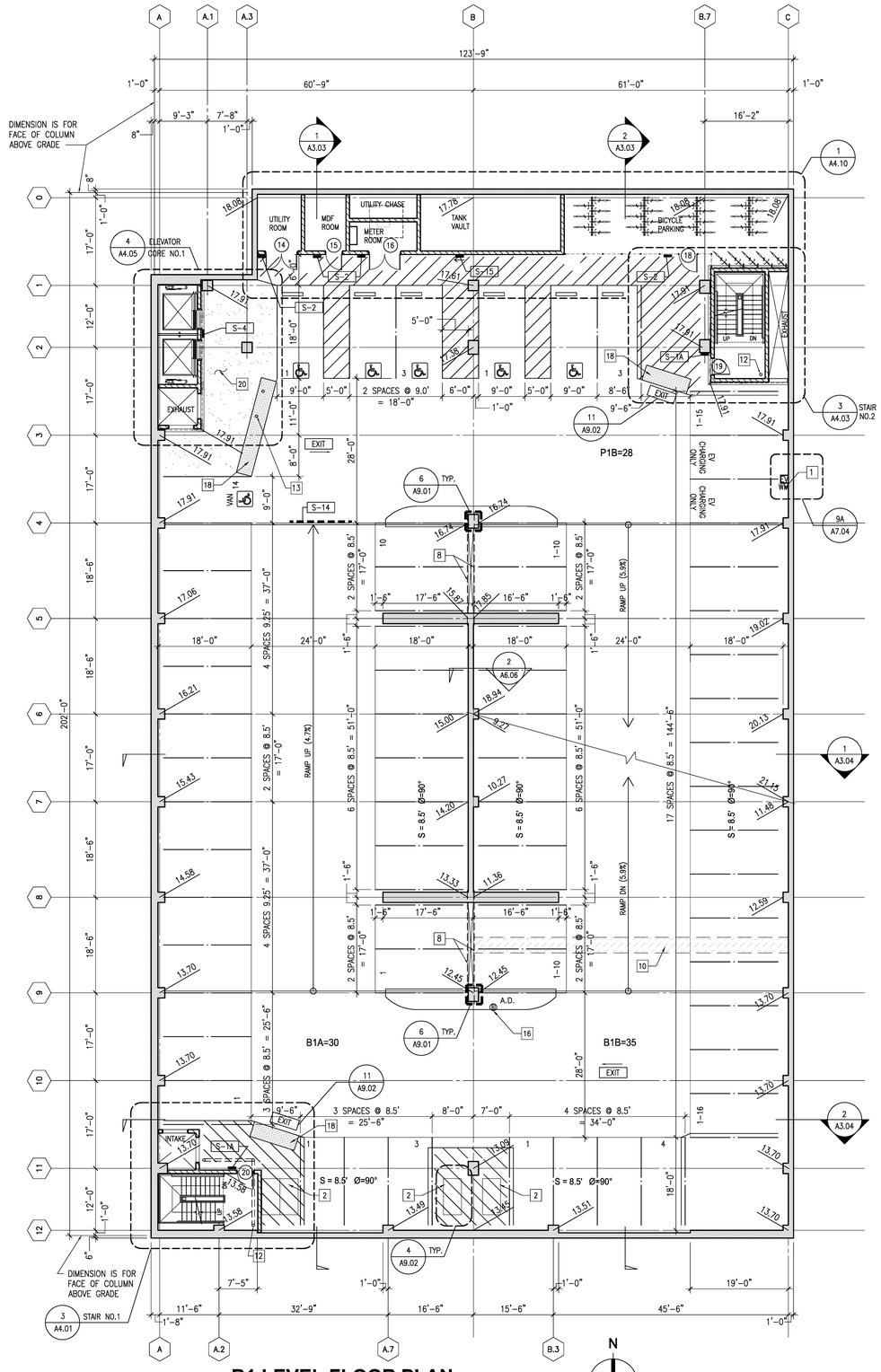


## B1 LEVEL FLOOR PLAN

SCALE: 3/32" = 1'-0"

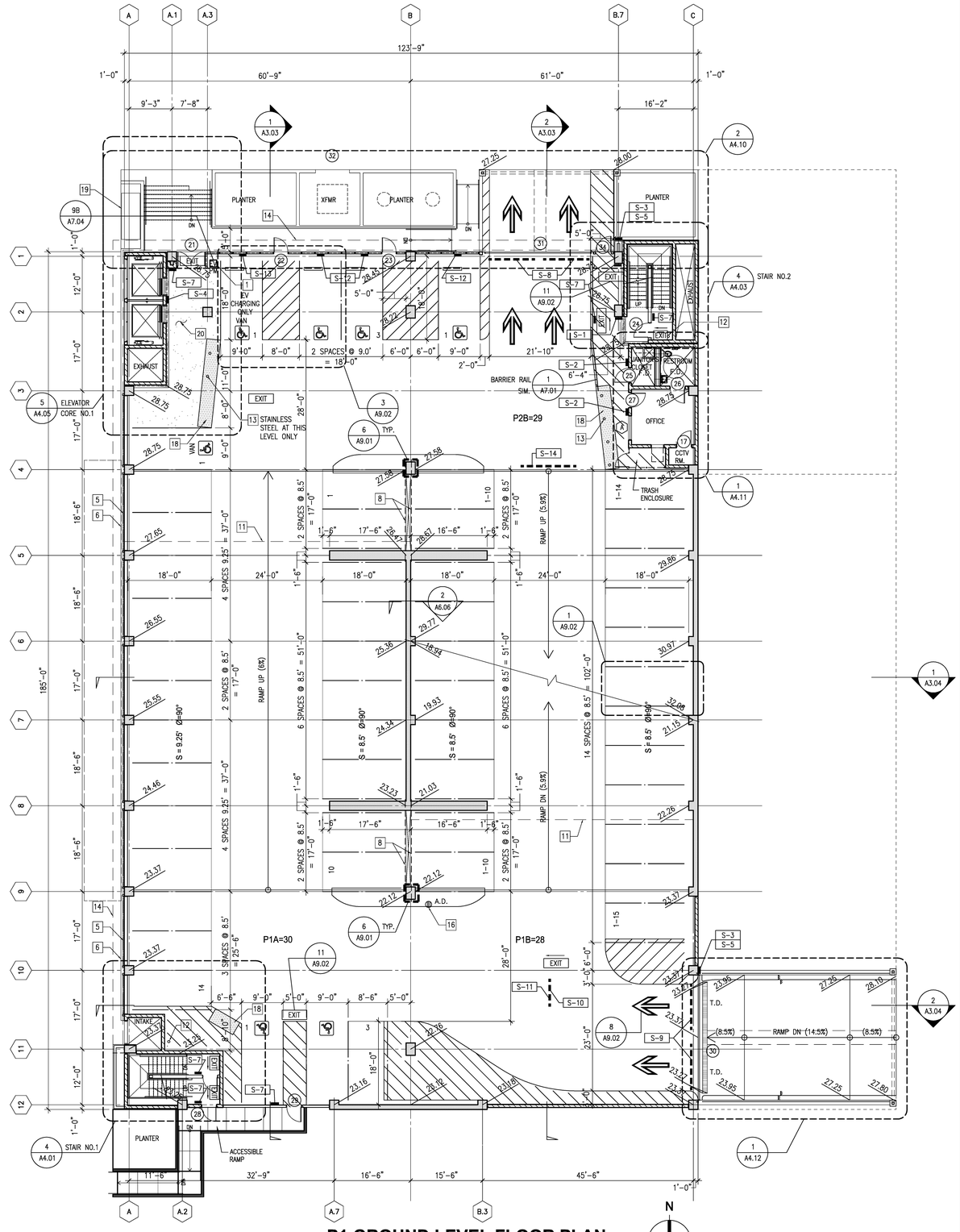


## P1 GROUND LEVEL FLOOR PLAN

SCALE: 3/32" = 1'-0"

### STORAGE OF HAZARDOUS MATERIALS:

THIS PARKING GARAGE IS NOT TO BE USED FOR THE STORAGE OF HAZARDOUS MATERIALS AND WILL ONLY BE USED TO STORE ITEMS EXCLUSIVELY INTENDED FOR THE PARKING STRUCTURE'S OPERATIONS.

### KEY NOTES:

| | | | | | | | | | | | |
|---|---|---|---|---|---|---|---|---|---|---|---|
| 1 | POWER PROVISIONS FOR ELECTRICAL VEHICLE CHARGING STATION (PEDESTAL MOUNT (PM) OR WALL MOUNT (WM)) | 4 | SAND OIL INTERCEPTOR (SEE PLUMBING DWGS.) | 7 | LINE OF RETAINING WALL BELOW | 10 | POUR STRIP, SEE 6/A7.02 | 13 | BOLLARD, SEE 11/A7.02 | 17 | GUARDRAIL, SEE SHEET A7.01 |
| 2 | MOTORCYCLE PARKING SPACE | 5 | SECURITY SCREEN SET IN ALUMINUM STOREFRONT FRAME | 8 | CABLE BARRIER, SEE DETAIL 9/A7.02 | 11 | CONSTRUCTION JOINT, SEE 12/A7.02 | 14 | LINE OF EYEBROW PROJECTION ABOVE, SEE ELEVATIONS AND A7.05 | 18 | SURFACE APPLIED DETECTABLE WARNING STRIP, 2/A7.02 |
| 3 | SEWAGE EJECTOR (SEE PLUMBING DWGS.) | 6 | LINE OF CMU WALL BELOW | 9 | STRIPING, SEE SHEET A9.02 FOR DETAILS | 12 | COMBINATION STANDPIPE | 15 | FLOOR DRAIN, SEE PLUMBING DRAWINGS | 19 | MTS EQUIPMENT BEYOND – UNDER SEPARATE PERMIT |
| | | | | | | | | 16 | AREA DRAIN, SEE PLUMBING DRAWINGS | 20 | MEDIUM BROOM FINISH |

**County of San Diego**
**Cedar & Kettner**
**Development Project**
San Diego, California

McCARTHY
20401 S.W. BIRCH STREET SUITE 300
Newport Beach, California 92660

Architect
IPD
Alameda
Irvine
Los Angeles
Architecture / Engineering / Consulting
www.ipd-global.com
2 Faraday, Suite 101, Irvine CA 92618
Phone 949 595 8004 Fax 949 595 8011

| Revision | Date |
|---|---|
| 100% DESIGN DEVELOPMENT | 10/23/13 |
| 90% CDs - 1ST PLAN CHECK | 12/24/13 |
| 2ND PLAN CHECK | 04/23/14 |

| | |
|---|---|
| Date | |
| IPD Job No. | 13-813 |
| Drawn By | MS |
| Checked By | |
| Scale | 3/32" = 1'-0" |

CONSTRUCTION DOCUMENTS

Drawing Title
B1 AND P1 LEVEL PLANS

Drawing No.
**A2.02**

IPD, Inc.

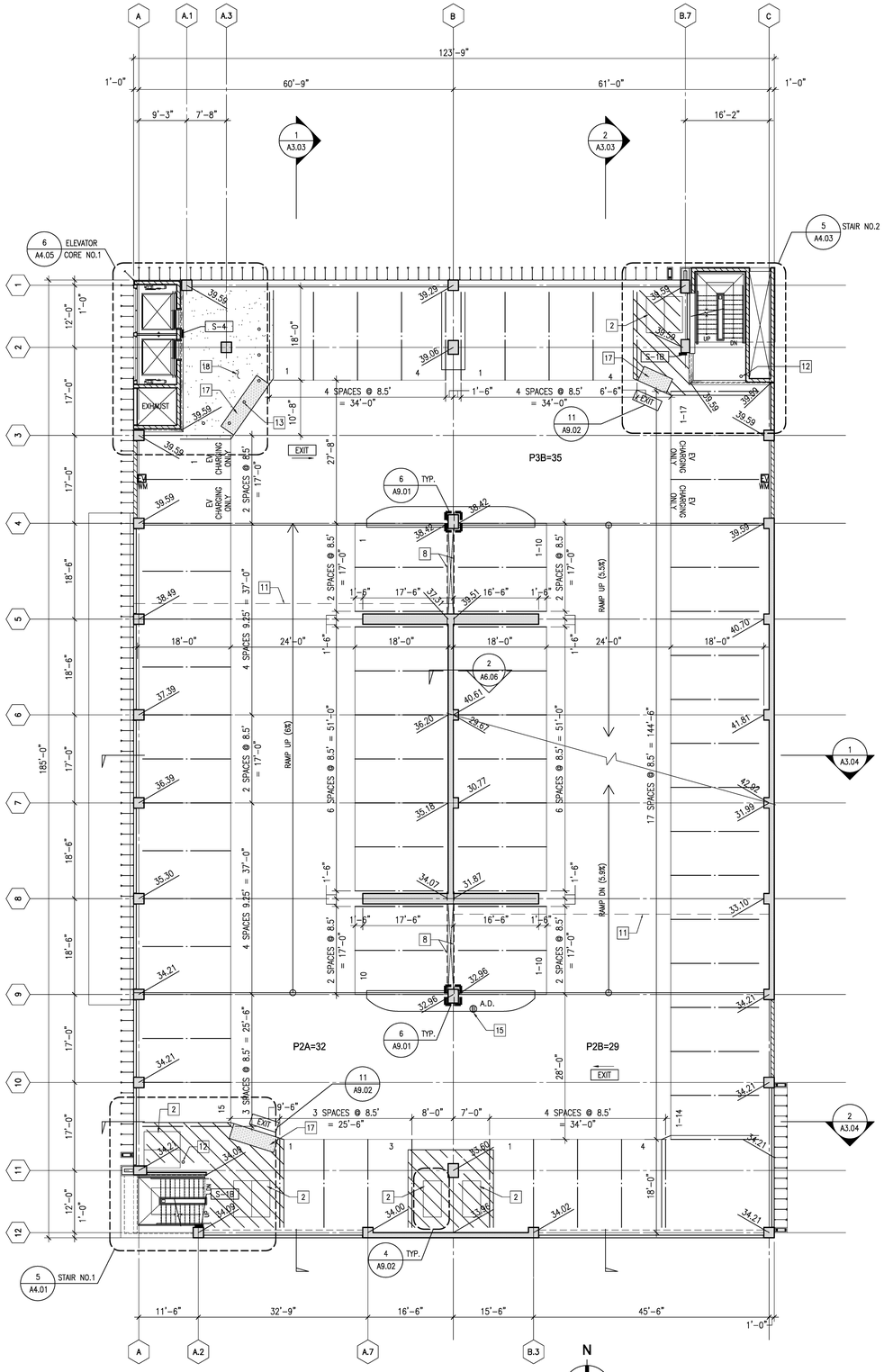


## P2 LEVEL FLOOR PLAN

SCALE: 3/32" = 1'-0"

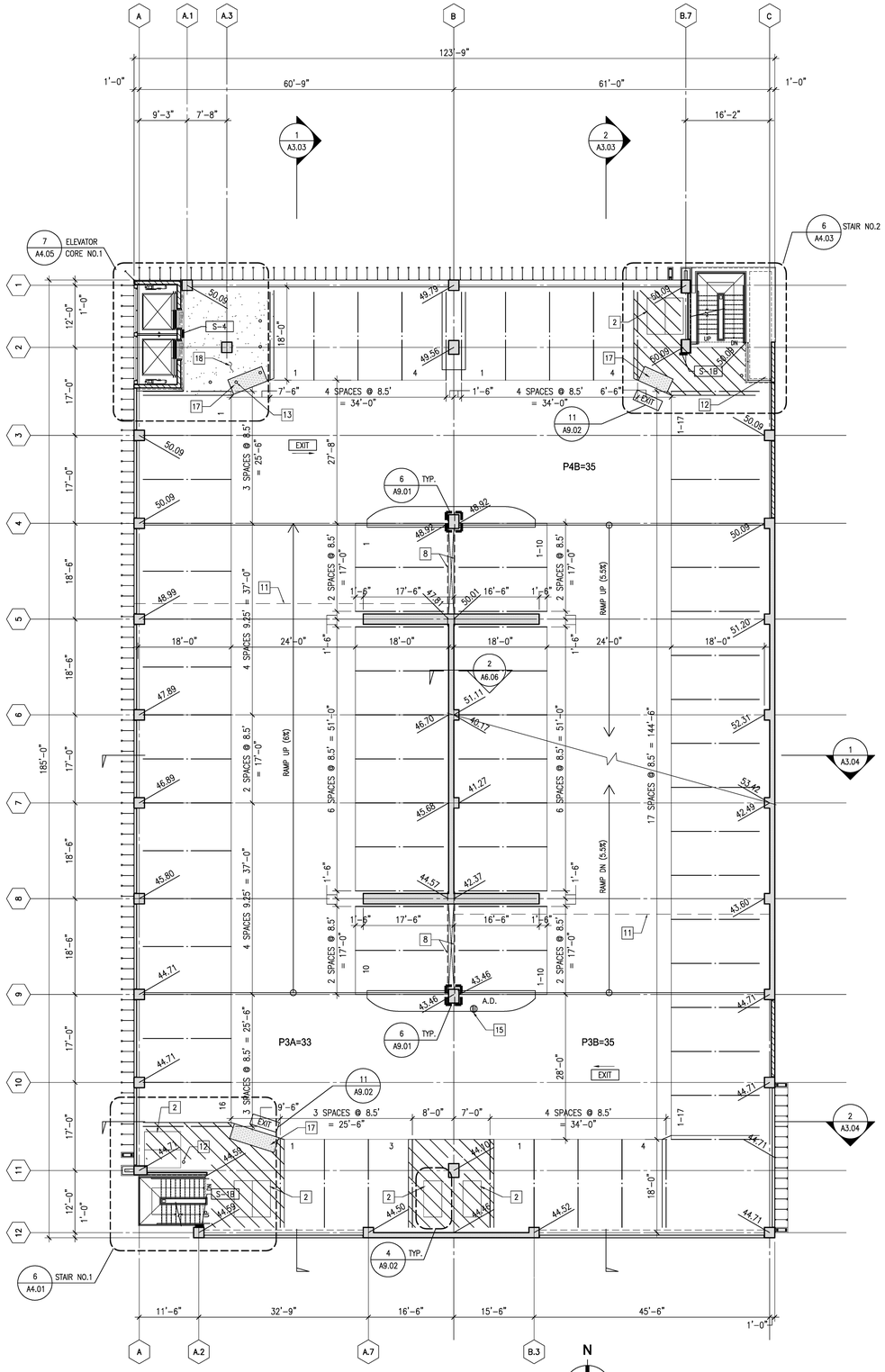


## P3 LEVEL FLOOR PLAN

SCALE: 3/32" = 1'-0"

KEY NOTES:

| | | | | | |
|---|---|---|---|---|---|
| 1 POWER PROVISIONS FOR ELECTRICAL VEHICLE CHARGING STATION (PEDESTAL MOUNT (PM) OR WALL MOUNT (WM)) | 4 SAND OIL INTERCEPTOR (SEE PLUMBING DWGS.) | 7 LINE OF RETAINING WALL BELOW | 10 POUR STRIP, SEE 6/A7.02 | 13 BOLLARD, SEE 11/A7.02 | 16 GUARDRAIL, SEE SHEET A7.01 |
| 2 MOTORCYCLE PARKING SPACE | 5 SECURITY SCREEN SET IN ALUMINUM STOREFRONT FRAME | 8 CABLE BARRIER, SEE DETAIL 9/A7.02 | 11 CONSTRUCTION JOINT, SEE 12/A7.02 | 14 FLOOR DRAIN, SEE PLUMBING DRAWINGS | 17 SURFACE APPLIED DETECTABLE WARNING STRIP, 2/A7.02 |
| 3 SEWAGE EJECTOR (SEE PLUMBING DWGS.) | 6 LINE OF CMU WALL BELOW | 9 STRIPING, SEE SHEET A9.02 FOR DETAILS | 12 COMBINATION STANDPIPE | 15 AREA DRAIN, SEE PLUMBING DRAWINGS | 18 MEDIUM BROOM FINISH |

**County of San Diego**
**Cedar & Kettner**
**Development Project**
San Diego, California

McCARTHY

20401 S.W. BIRCH STREET SUITE 300
Newport Beach, California 92660

Architect

IPD

Alameda
Irvine
Los Angeles

Architecture / Engineering / Consulting
www.ipd-global.com

2 Faraday, Suite 101, Irvine CA 92618
Phone 949 595 8004 Fax 949 595 8011

| Revision | Date |
|---|---|
| 100% DESIGN DEVELOPMENT | 10/23/13 |
| 90% CDs - 1ST PLAN CHECK | 12/24/13 |
| 2ND PLAN CHECK | 04/23/14 |

| | |
|---|---|
| Date | |
| IPD Job No. | 13-813 |
| Drawn By | MS |
| Checked By | |
| Scale | 3/32" = 1'-0" |

CONSTRUCTION DOCUMENTS

Drawing Title

P2 AND P3 LEVEL PLANS

Drawing No.

**A2.03**

IPD, Inc.

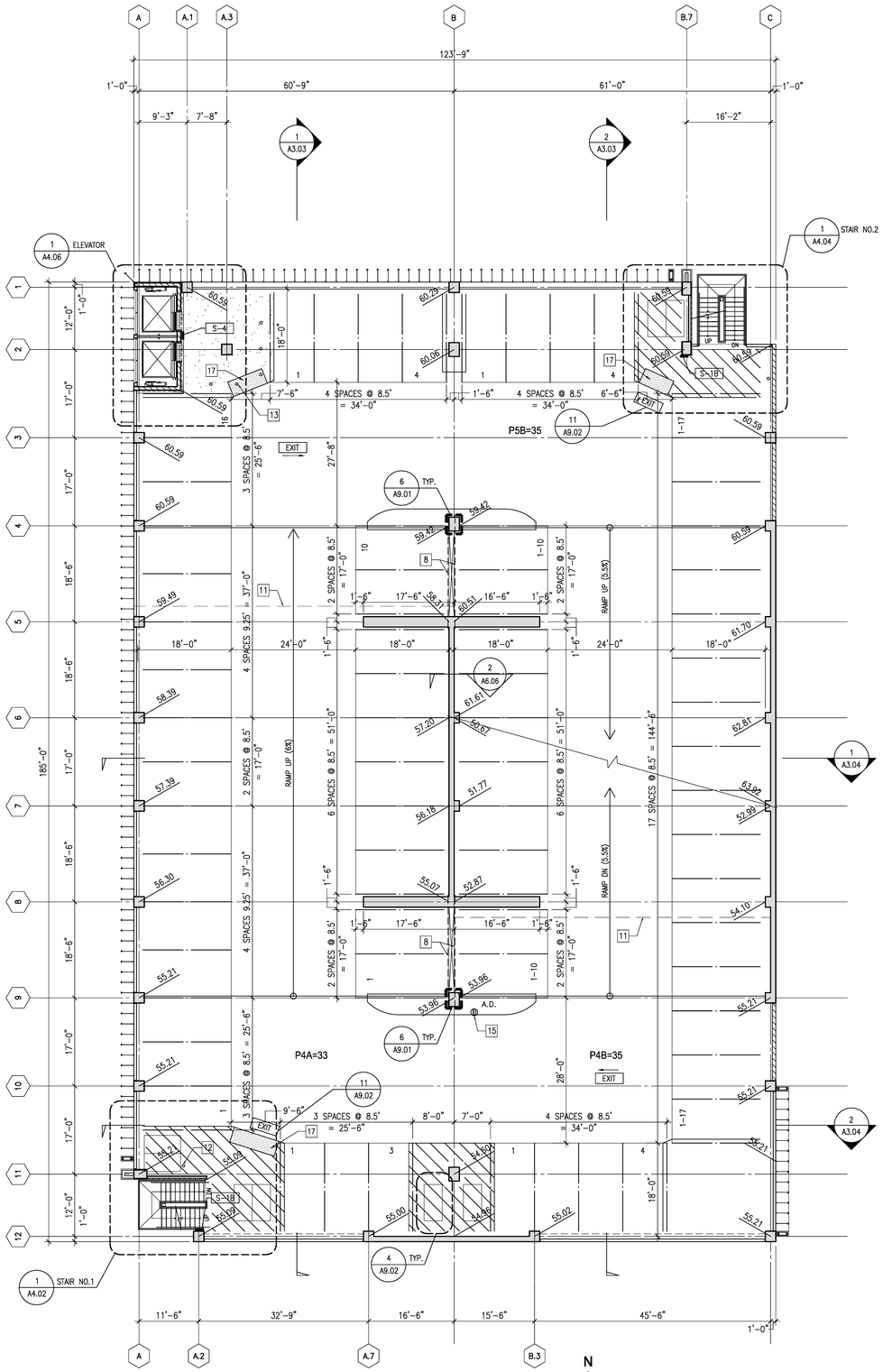


## P4 LEVEL FLOOR PLAN

SCALE: 3/32" = 1'-0"

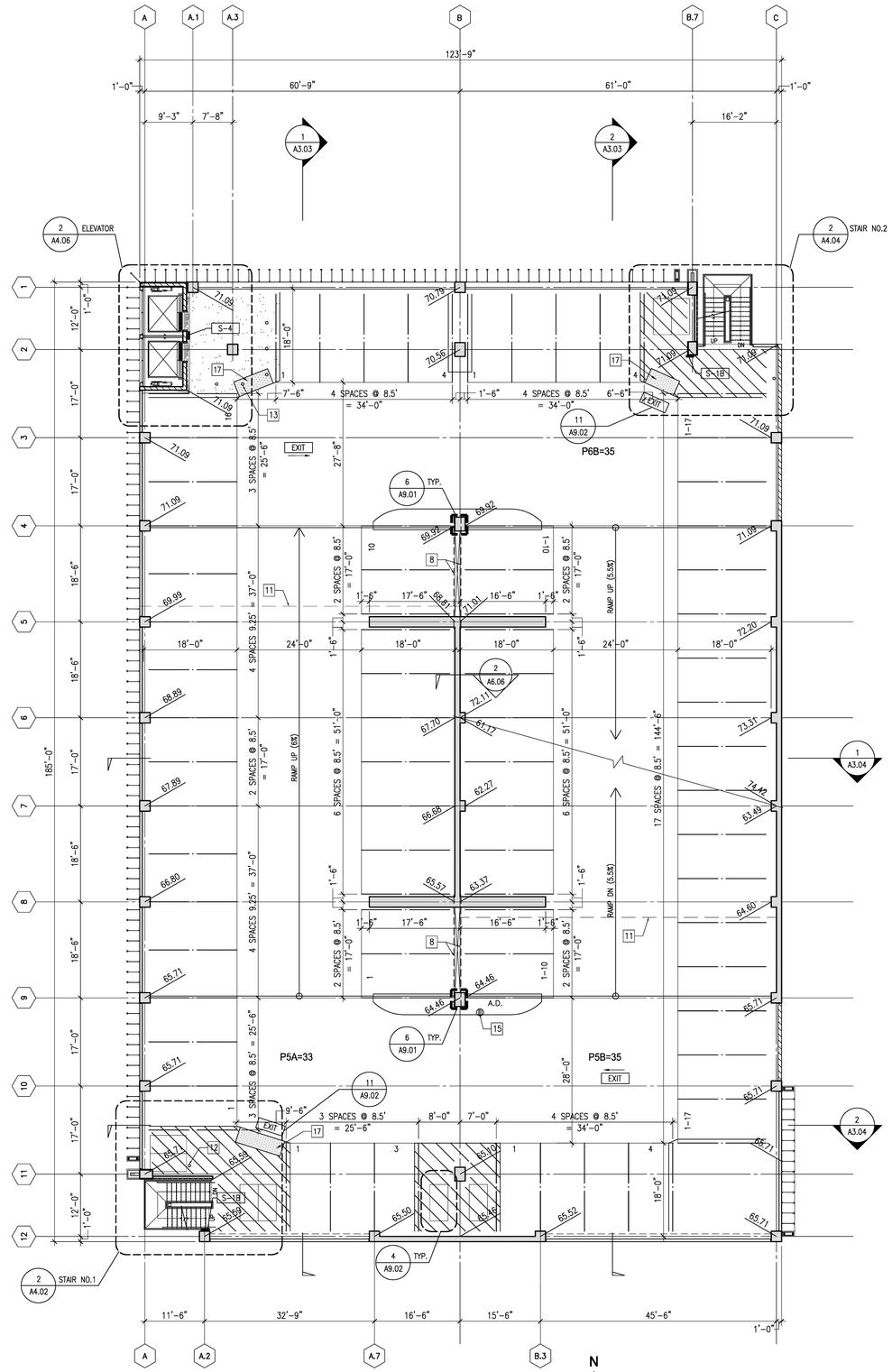


## P5 LEVEL FLOOR PLAN

SCALE: 3/32" = 1'-0"

KEY NOTES:

| | | | | | |
|---|---|---|---|---|---|
| 1 POWER PROVISIONS FOR ELECTRICAL VEHICLE CHARGING STATION (PEDESTAL MOUNT (PM) OR WALL MOUNT (WM)) | 4 SAND OIL INTERCEPTOR (SEE PLUMBING DWGS.) | 7 LINE OF RETAINING WALL BELOW | 10 POUR STRIP, SEE 6/A7.02 | 13 BOLLARD, SEE 11/A7.02 | 16 GUARDRAIL, SEE SHEET A7.01 |
| 2 MOTORCYCLE PARKING SPACE | 5 SECURITY SCREEN SET IN ALUMINUM STOREFRONT FRAME | 8 CABLE BARRIER, SEE DETAIL 9/A7.02 | 11 CONSTRUCTION JOINT, SEE 12/A7.02 | 14 FLOOR DRAIN, SEE PLUMBING DRAWINGS | 17 SURFACE APPLIED DETECTABLE WARNING STRIP, 2/A7.02 |
| 3 SEWAGE EJECTOR (SEE PLUMBING DWGS.) | 6 LINE OF CMU WALL BELOW | 9 STRIPING, SEE SHEET A9.02 FOR DETAILS | 12 COMBINATION STANDPIPE | 15 AREA DRAIN, SEE PLUMBING DRAWINGS | 18 MEDIUM BROOM FINISH |

**County of San Diego**
**Cedar & Kettner**
**Development Project**
San Diego, California

McCARTHY

20401 S.W. BIRCH STREET SUITE 300
Newport Beach, California 92660

Architect

IPD

Alameda
Irvine
Los Angeles

Architecture / Engineering / Consulting
www.ipd-global.com

2 Faraday, Suite 101, Irvine CA 92618
Phone 949 595 8004 Fax 949 595 8011

| Revision | Date |
|---|---|
| 100% DESIGN DEVELOPMENT | 10/23/13 |
| 90% CDs - 1ST PLAN CHECK | 12/24/13 |
| 2ND PLAN CHECK | 04/23/14 |

| | |
|---|---|
| Date | |
| IPD Job No. | 13-813 |
| Drawn By | MS |
| Checked By | |
| Scale | 3/32" = 1'-0" |

CONSTRUCTION DOCUMENTS

Drawing Title

P4 AND P5 LEVEL PLANS

Drawing No.

**A2.04**

IPD, Inc.

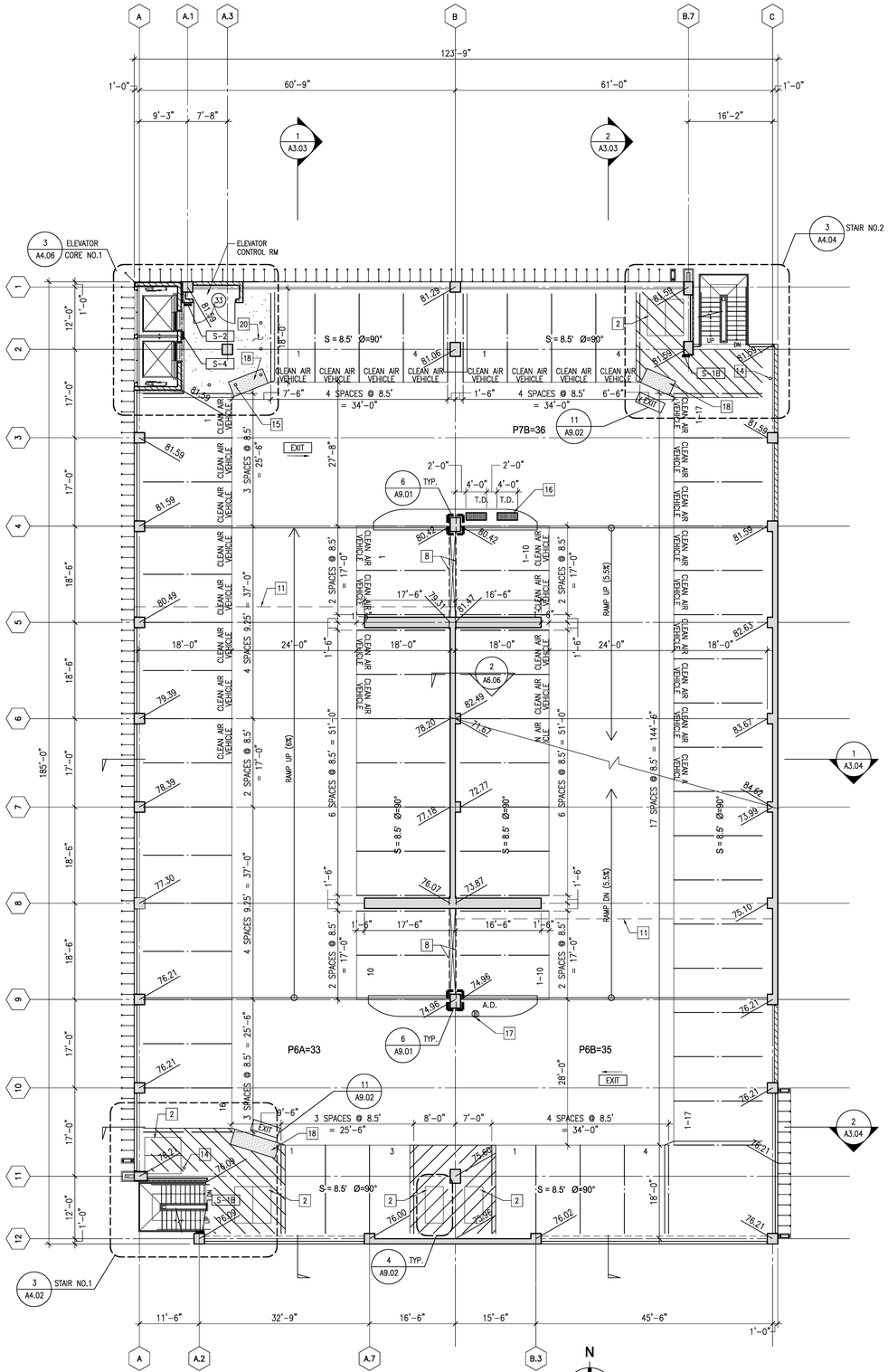


## P6 LEVEL FLOOR PLAN

SCALE: 3/32" = 1'-0"

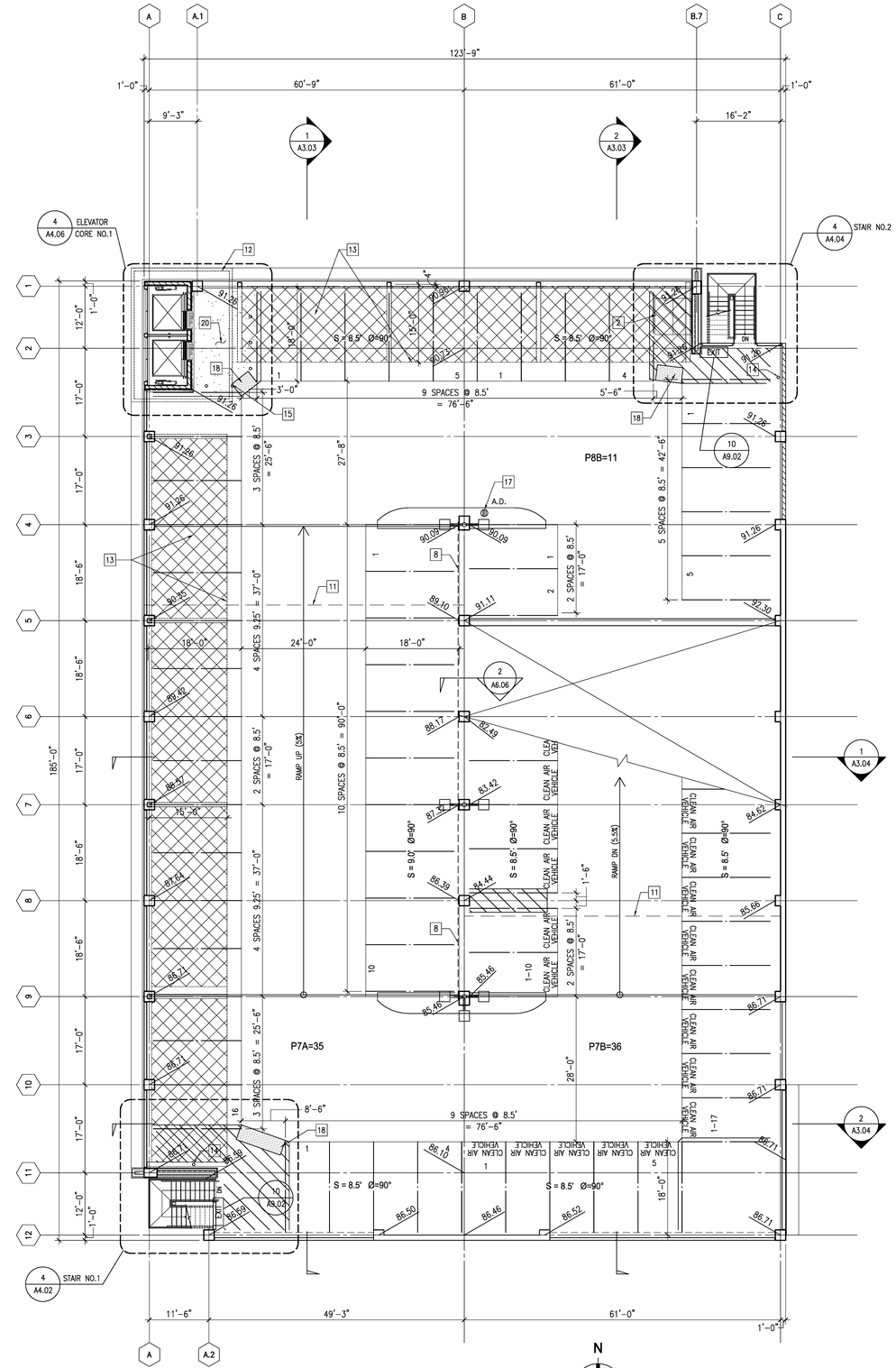


## P7 LEVEL FLOOR PLAN

SCALE: 3/32" = 1'-0"

KEY NOTES:

| | | | | | |
|---|---|---|---|---|---|
| 1 POWER PROVISIONS FOR ELECTRICAL VEHICLE CHARGING STATION (PEDESTAL MOUNT (PM) OR WALL MOUNT (WM)) | 4 SAND OIL INTERCEPTOR (SEE PLUMBING DWGS.) | 7 LINE OF RETAINING WALL BELOW | 10 POUR STRIP, SEE 6/A7.02 | 13 FABRIC SHADE SYSTEM & STRUCTURE, SEE 11/A7.04 | 17 AREA DRAIN, SEE PLUMBING DRAWINGS |
| 2 MOTORCYCLE PARKING SPACE | 5 SECURITY SCREEN SET IN ALUMINUM STOREFRONT FRAME | 8 CABLE BARRIER, SEE DETAIL 9/A7.02 | 11 CONSTRUCTION JOINT, SEE 12/A7.02 | 14 COMBINATION STANDPIPE | 18 SURFACE APPLIED DETECTABLE WARNING STRIP, 2/A7.02 |
| 3 SEWAGE EJECTOR (SEE PLUMBING DWGS.) | 6 LINE OF CMU WALL BELOW | 9 STRIPING, SEE SHEET A9.02 FOR DETAILS | 12 ELEVATOR CANOPY ABOVE | 15 BOLLARD, SEE 11/A7.02 | 19 GUARDRAIL, SEE SHEET A7.01 |
| | | | | 16 TRENCH DRAIN, SEE PLUMBING DRAWINGS | 20 MEDIUM BROOM FINISH |

**County of San Diego**
**Cedar & Kettner**
**Development Project**
San Diego, California

McCARTHY

20401 S.W. BIRCH STREET SUITE 300
Newport Beach, California 92660

Architect

IPD
Alameda
Irvine
Los Angeles

Architecture / Engineering / Consulting
www.ipd-global.com

2 Faraday, Suite 101, Irvine CA 92618
Phone 949 595 8004 Fax 949 595 8011

| Revision | Date |
|---|---|
| 100% DESIGN DEVELOPMENT | 10/23/13 |
| 90% CDs - 1ST PLAN CHECK | 12/24/13 |
| 2ND PLAN CHECK | 04/23/14 |

| | |
|---|---|
| Date | |
| IPD Job No. | 13-813 |
| Drawn By | MS |
| Checked By | |
| Scale | 3/32" = 1'-0" |

CONSTRUCTION DOCUMENTS

Drawing Title
P6 AND P7 LEVEL PLANS

Drawing No.
**A2.05**

IPD, Inc.

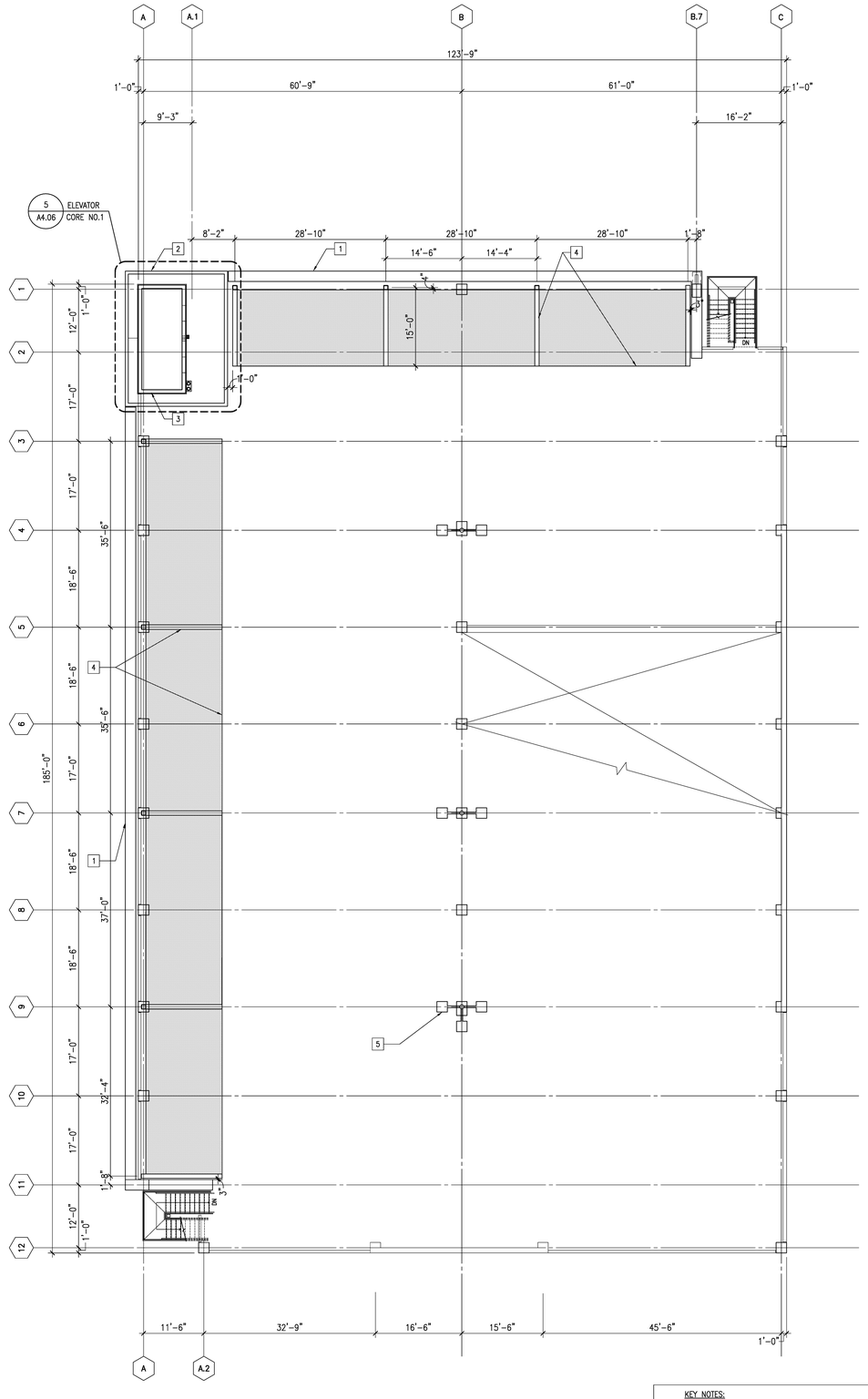


KEY NOTES:

1. ALUMINUM COMPOSITE PANEL OVER METAL STUD FRAMING, SEE DETAIL 6/A7.05 FOR BASIS OF DESIGN
2. ELEVATOR CANOPY ROOF
3. ELEVATOR PARAPET
4. FABRIC SHADE SYSTEM & STRUCTURE, SEE DETAIL 11/A7.04 FOR BASIS OF DESIGN. SEE STRUCTURAL DRAWINGS FOR ADDITIONAL INFORMATION
5. LIGHT STANDARD, SEE ELECT. DWGS.

N

## CANOPY / ROOF PLAN

SCALE: 3/32" = 1'-0"

**County of San Diego**
**Cedar & Kettner**
**Development Project**
San Diego, California

McCARTHY

20401 S.W. BIRCH STREET SUITE 300
Newport Beach, California 92660

Architect

IPD

Alameda
Irvine
Los Angeles

Architecture / Engineering / Consulting
www.ipd-global.com

2 Faraday, Suite 101, Irvine CA 92618
Phone 949 595 8004 Fax 949 595 8011

| Revision | Date |
|---|---|
| 100% DESIGN DEVELOPMENT | 10/23/13 |
| 90% CDs - 1ST PLAN CHECK | 12/24/13 |
| 2ND PLAN CHECK | 04/23/14 |

| | |
|---|---|
| Date | |
| IPD Job No. | 13-813 |
| Drawn By | MS |
| Checked By | |
| Scale | 3/32" = 1'-0" |

CONSTRUCTION DOCUMENTS

Drawing Title

CANOPY / ROOF PLAN

Drawing No.

**A2.06**

IPD, Inc.

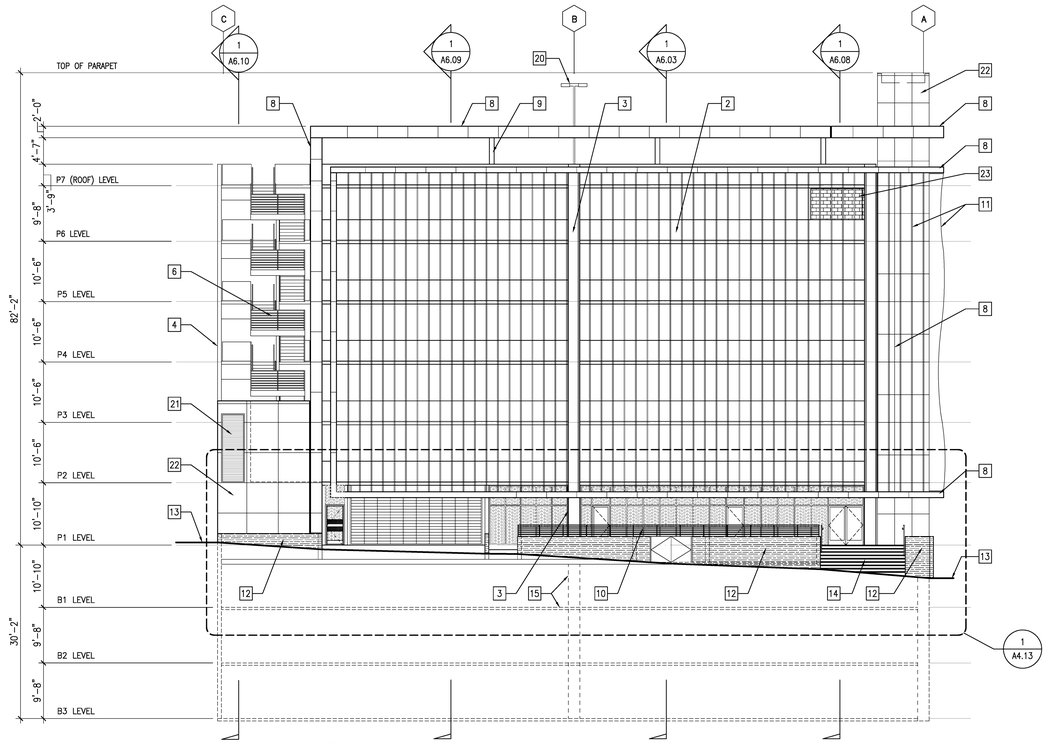


## NORTH ELEVATION

SCALE: 3/32" = 1'-0"

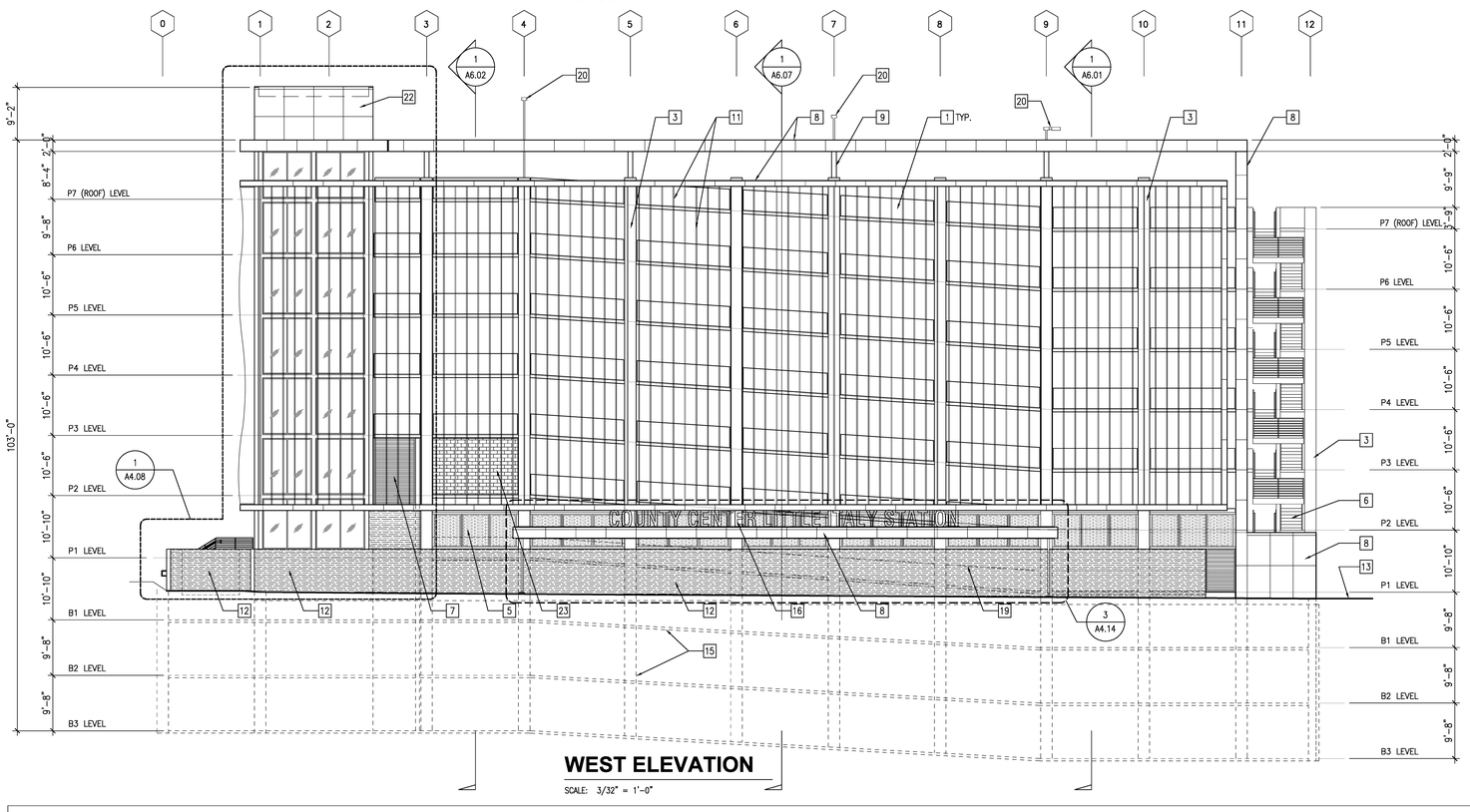


## WEST ELEVATION

SCALE: 3/32" = 1'-0"

### EXTERIOR BUILDING ELEVATIONS KEY NOTES

| | | | | | | |
|---|---|---|---|---|---|---|
| 1 CONCRETE SPANDREL, PAINTED (SEE STRUCT. DWGS.) | 5 SECURITY SCREENING SET IN ALUMINUM STOREFRONT FRAME | 9 STEEL SHADE CANOPY SUPPORTS, PAINTED – DEFERRED APPROVAL | 13 FINISH SURFACE (SEE CIVIL DWGS.) | 17 PLASTER CONTROL JOINT, TYP. | 21 EXTRUDED STATIONARY LOUVERS (SEE NOTE) |
| 2 CONCRETE UPTURNED BEAM, PAINTED (SEE STRUCT. DWGS.) | 6 STEEL STAIRS, PAINTED | 10 STEEL RAILING, PAINTED | 14 CONCRETE STAIRS ON GRADE | 18 SIGNAGE (DO NOT ENTER) | 22 ALUMINUM COMPOSITE PANELS OVER CMU WALL – DEFERRED APPROVAL |
| 3 CONCRETE COLUMN, PAINTED (SEE STRUCT. DWGS.) | 7 METAL SCREENED LOUVER, PAINTED (SEE MECHANICAL DWGS.) | 11 ANODIZED ALUMINUM FINS SET IN SUPPORT FRAME – DEFERRED APPROVAL | 15 LINE OF STRUCTURE BELOW GRADE | 19 CONCRETE SPANDREL BEYOND | 23 CMU WALL, PAINTED |
| 4 CMU WALL, NO PAINT | 8 ALUMINUM COMPOSITE PANELS OVER METAL STUD FRAMING – DEFERRED APPROVAL | 12 GROUND–FACE CMU BLOCK | 16 ILLUMINATED SIGNAGE | 20 LIGHT STANDARD SEE ELECTRICAL DWGS. | |

NOTE:
MANUF.: ARCHITECTURAL LOUVERS
MODEL: E6JN
SIZE: 4'-0" x 12'-0" MIN. (48 SF.)

**County of San Diego**
**Cedar & Kettner**
**Development Project**
San Diego, California

McCARTHY

20401 S.W. BIRCH STREET SUITE 300
Newport Beach, California 92660

Architect

IPD

Alameda
Irvine
Los Angeles

Architecture / Engineering / Consulting
www.ipd-global.com

2 Faraday, Suite 101, Irvine CA 92618
Phone 949 595 8004 Fax 949 595 8011

| Revision | Date |
|---|---|
| 100% DESIGN DEVELOPMENT | 10/23/13 |
| 90% CDs - 1ST PLAN CHECK | 12/24/13 |
| 2ND PLAN CHECK | 04/23/14 |

| | |
|---|---|
| Date | |
| IPD Job No. | 13-813 |
| Drawn By | MS |
| Checked By | |
| Scale | AS SHOWN |

CONSTRUCTION DOCUMENTS

Drawing Title
EXTERIOR ELEVATIONS

Drawing No.
**A3.01**

IPD, Inc.

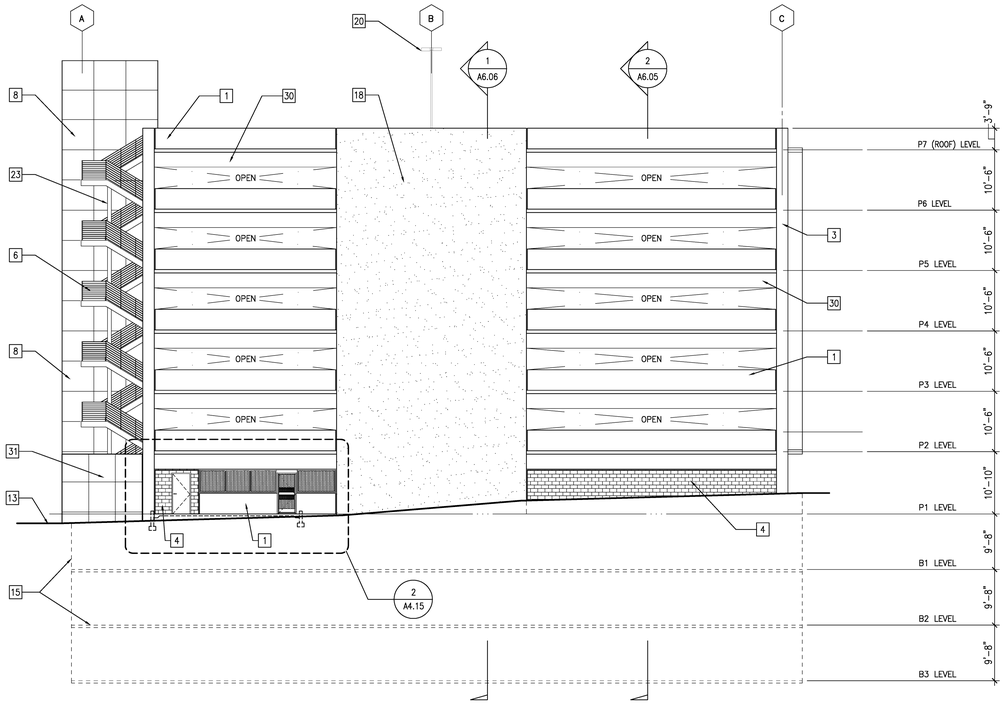


## SOUTH ELEVATION

SCALE: 3/32" = 1'-0"

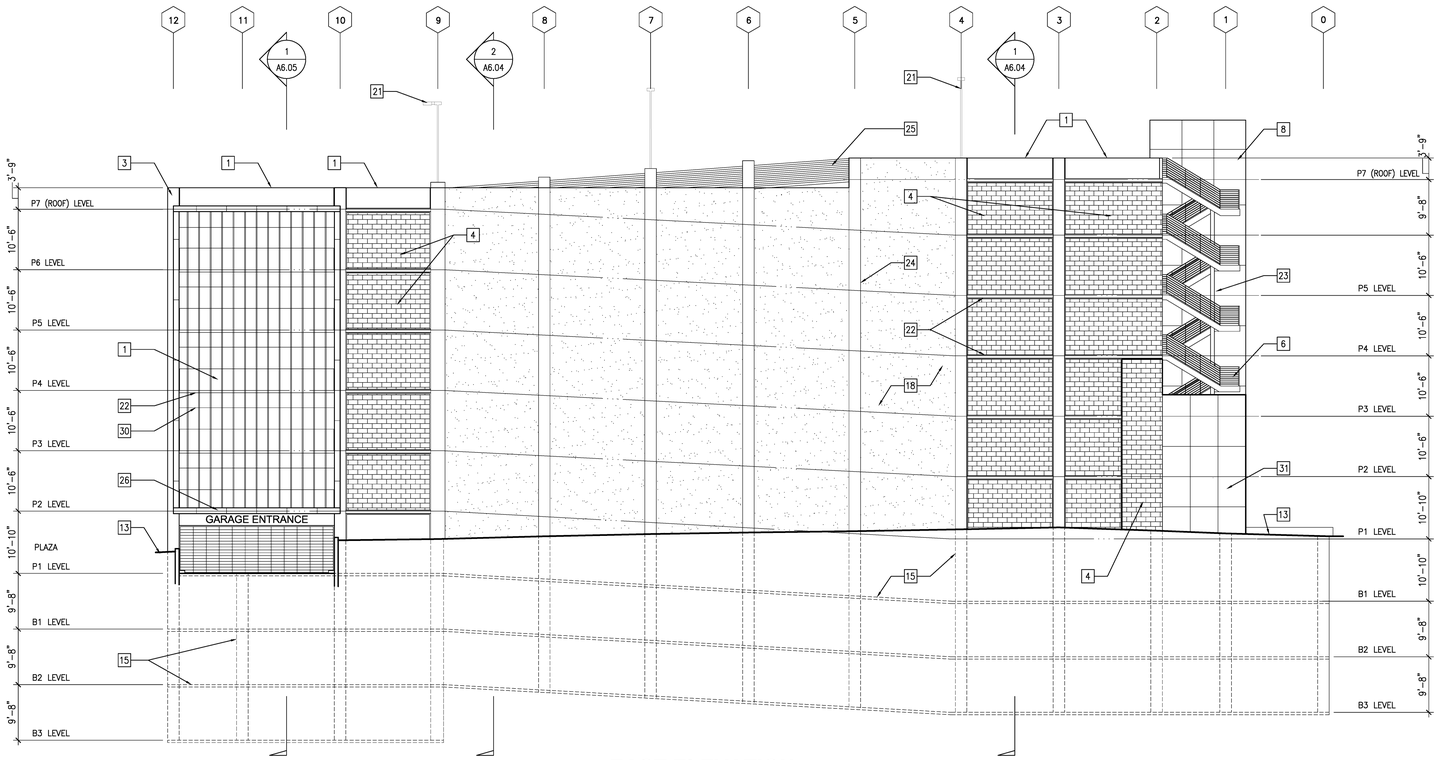


## EAST ELEVATION

SCALE: 3/32" = 1'-0"

### EXTERIOR BUILDING ELEVATIONS KEY NOTES

| | | | | | | | | | | | | | | | |
|---|---|---|---|---|---|---|---|---|---|---|---|---|---|---|---|
| 1 | CONCRETE SPANDREL, (SEE STRUCT. DWGS.) | 5 | SECURITY SCREENING SET IN ALUMINUM STOREFRONT FRAME | 9 | STEEL SHADE CANOPY SUPPORTS, PAINTED – DEFERRED APPROVAL | 13 | FINISH SURFACE (SEE CIVIL DWGS.) | 17 | PLASTER CONTROL JOINT, TYP. | 21 | LIGHT STANDARD, SEE ELECT. DWGS. | 25 | CABLE BARRIER, TYP. | 29 | PORTLAND CEMENT PLASTER OVER METAL STUD FRAMING |
| 2 | CONCRETE UPTURNED BEAM, (SEE STRUCT. DWGS.) | 6 | STEEL STAIRS, PAINTED | 10 | STEEL RAILING, PAINTED | 14 | CONCRETE STAIRS ON GRADE | 18 | CAST-IN-PLACE CONCRETE | 22 | EDGE OF CONCRETE DECK | 26 | CANTILEVERED CONCRETE DECK | 30 | CONCRETE DOWNTURNED BEAM |
| 3 | CONCRETE COLUMN, (SEE STRUCT. DWGS.) | 7 | METAL SCREENED LOUVER, PAINTED (SEE MECHANICAL DWGS.) | 11 | ANODIZED ALUMINUM FINS SET IN SUPPORT FRAME – DEFERRED APPROVAL | 15 | LINE OF STRUCTURE BELOW GRADE | 19 | PORTLAND CEMENT PLASTER OVER METAL STUD FRAMING | 23 | EXPOSED STEEL SUPPORT, PAINTED | 27 | RETAINING WALL (SEE STRUCT. DWGS.) | 31 | ALUMINUM COMPOSITE PANELS OVER CMU WALL – DEFERRED APPROVAL |
| 4 | CMU WALL, NO PAINT | 8 | ALUMINUM COMPOSITE PANELS OVER METAL STUD FRAMING – DEFERRED APPROVAL | 12 | CERAMIC TILE OVER CMU WALL (VENEER TO BE DETERMINED) | 16 | ILLUMINATED SIGNAGE | 20 | CONCRETE DOWNTURNED BEAM, PAINTED (SEE STRUCT. DWGS.) | 24 | CONCRETE REVEAL, TYP. | 28 | PARKING CONTROL, SEE PLANS | 32 | |

**County of San Diego**
**Cedar & Kettner**
**Development Project**
San Diego, California

McCARTHY

20401 S.W. BIRCH STREET SUITE 300
Newport Beach, California 92660

Architect

IPD

Alameda
Irvine
Los Angeles

Architecture / Engineering / Consulting
www.ipd-global.com

2 Faraday, Suite 101, Irvine CA 92618
Phone 949 595 8004 Fax 949 595 8011

| Revision | Date |
|---|---|
| 100% DESIGN DEVELOPMENT | 10/23/13 |
| 90% CDs - 1ST PLAN CHECK | 12/24/13 |
| 2ND PLAN CHECK | 04/23/14 |

| | |
|---|---|
| Date | |
| IPD Job No. | 13-813 |
| Drawn By | MS |
| Checked By | |
| Scale | AS SHOWN |

CONSTRUCTION DOCUMENTS

Drawing Title

EXTERIOR ELEVATIONS

Drawing No.

**A3.02**

IPD, Inc.

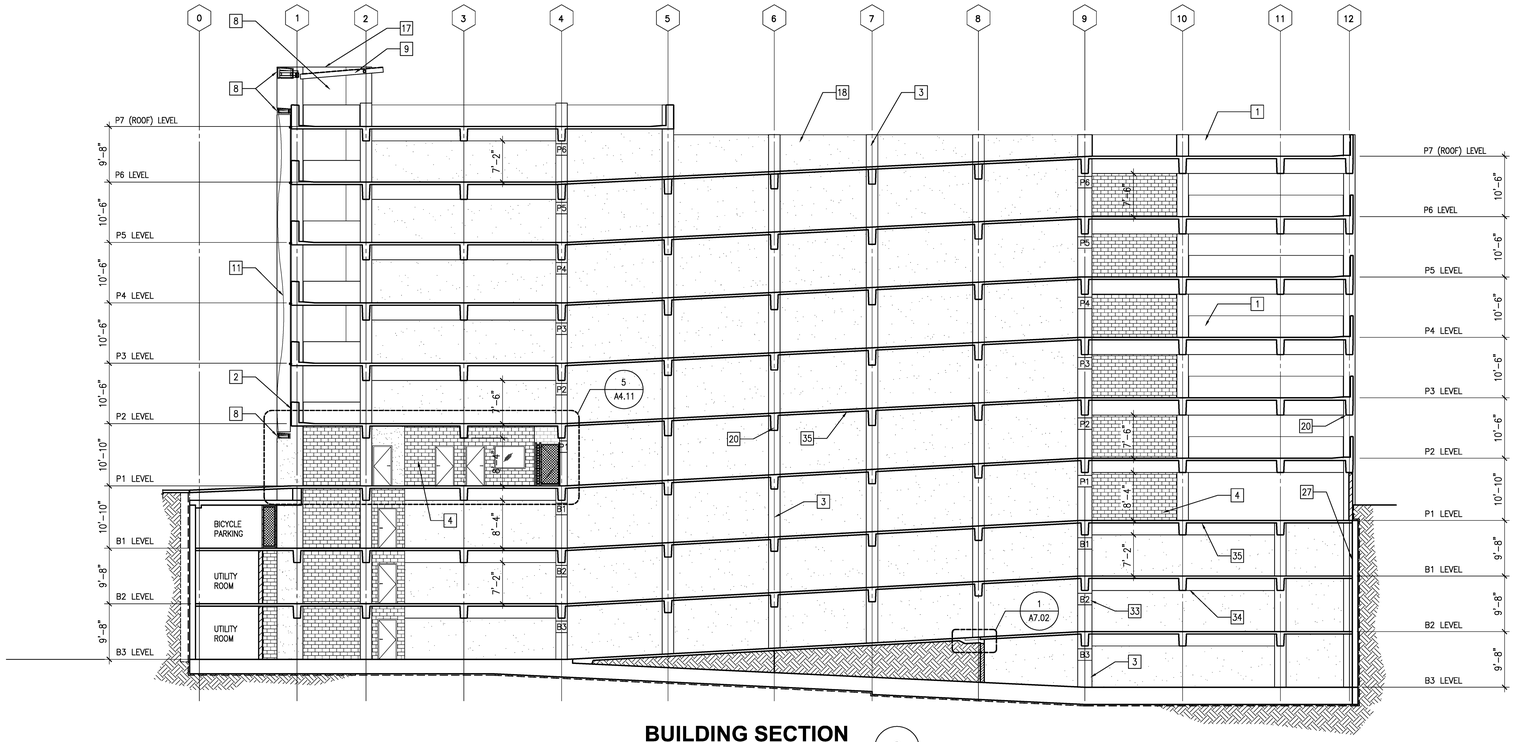


## BUILDING SECTION 2

SCALE: 3/32" = 1'-0"

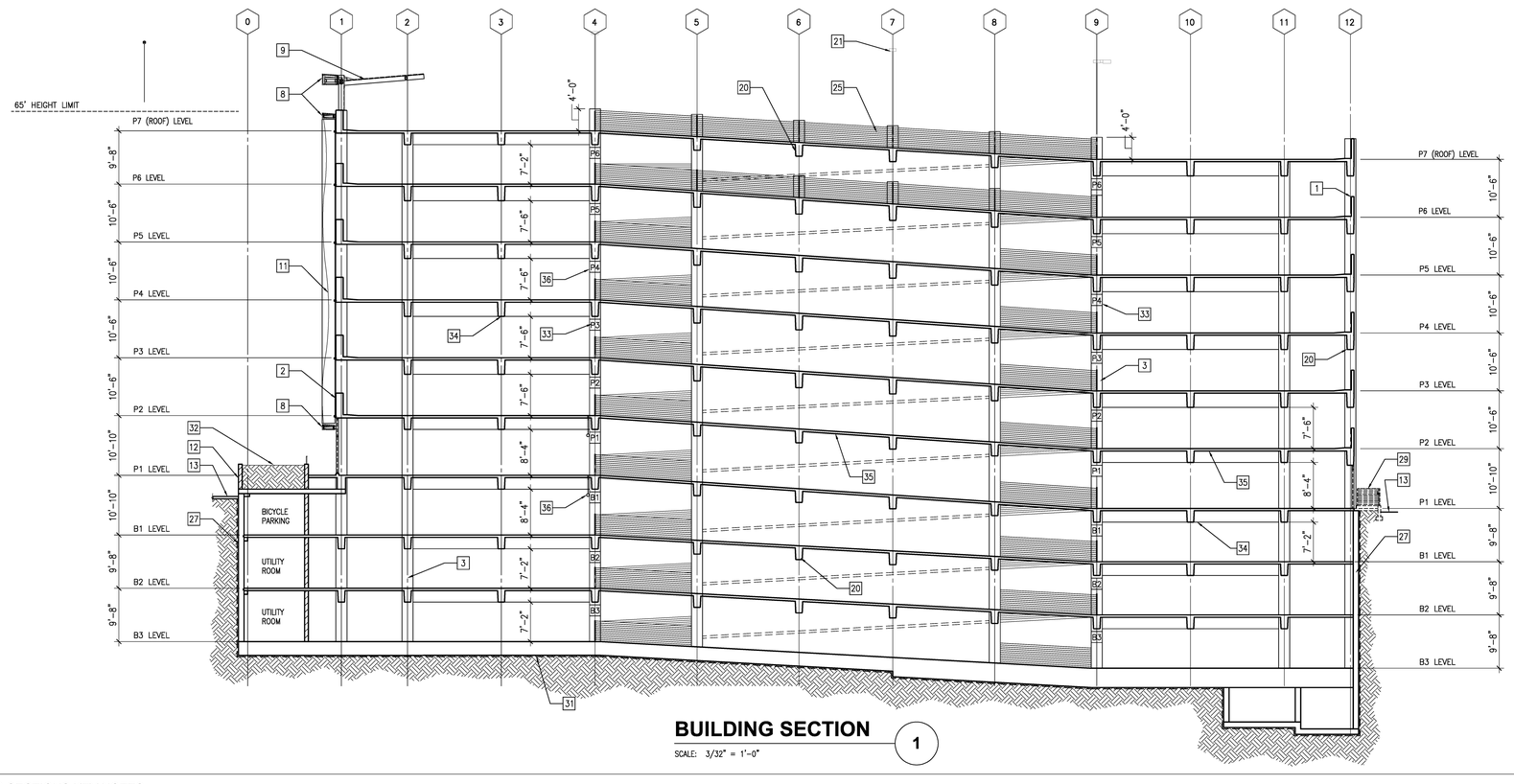


## BUILDING SECTION 1

SCALE: 3/32" = 1'-0"

### BUILDING SECTIONS KEY NOTES

| | | | | | | | | | | | | | | | |
|---|---|---|---|---|---|---|---|---|---|---|---|---|---|---|---|
| 1 | CONCRETE SPANDREL, PAINTED, (SEE STRUCT. DWGS.) | 5 | SECURITY SCREENING SET IN ALUMINUM STOREFRONT FRAME | 9 | STEEL SHADE CANOPY SUPPORTS, PAINTED – DEFERRED APPROVAL | 13 | FINISH SURFACE (SEE CIVIL DWGS.) | 18 | CONCRETE SHEAR WALL | 23 | EXPOSED STEEL SUPPORT, PAINTED | 28 | PARKING CONTROL, SEE PLANS | 33 | COLUMN PAINT GRAPHIC |
| 2 | CONCRETE UPTURNED BEAM, PAINTED, (SEE STRUCT. DWGS.) | 6 | STEEL STAIRS, PAINTED | 10 | STEEL RAILING, PAINTED | 14 | CONCRETE STAIRS ON GRADE | 19 | PORTLAND CEMENT PLASTER OVER METAL STUD FRAMING | 24 | CONCRETE REVEAL, TYP. | 29 | ACCESSIBLE RAMP (SEE LANDSCAPE DWGS.) | 34 | CONC. TRANSFER GIRDER, PAINTED (SEE STRUCT. DWGS.) |
| 3 | CONCRETE COLUMN, PAINTED (SEE STRUCT. DWGS.) | 7 | METAL SCREENED LOUVER, PAINTED (SEE MECHANICAL DWGS.) | 11 | ANODIZED ALUMINUM FINS SET IN SUPPORT FRAME – DEFERRED APPROVAL | 15 | LINE OF STRUCTURE BELOW GRADE | 20 | CONCRETE DOWNTURNED BEAM, PAINTED | 25 | CABLE BARRIER, TYP. | 30 | CHAIN-LINK ENCLOSURE | 35 | CONCRETE DECK, PAINTED (SEE STRUCT. DWGS.) |
| 4 | CMU WALL, PAINTED | 8 | ALUMINUM COMPOSITE PANELS OVER METAL STUD FRAMING – DEFERRED APPROVAL | 12 | GROUND-FACE CMU BLOCK | 16 | ILLUMINATED SIGNAGE | 21 | LIGHT STANDARD, SEE ELECT. DWGS. | 26 | CANTILEVERED CONCRETE DECK | 31 | WATERPROOFING – SEE WATERPROOFING DRAWINGS | 36 | OVERHEAD CLEARANCE WARNING SIGN |
| | | | | | | 17 | PLASTER CONTROL JOINT, TYP. | 22 | EDGE OF CONCRETE DECK | 27 | RETAINING WALL (SEE STRUCT. DWGS.) | 32 | PLANTER – SEE LANDSCAPE DRAWINGS | | |

**County of San Diego**
**Cedar & Kettner**
**Development Project**
San Diego, California

McCARTHY

20401 S.W. BIRCH STREET SUITE 300
Newport Beach, California 92660

Architect

IPD

Alameda
Irvine
Los Angeles

Architecture / Engineering / Consulting
www.ipd-global.com

2 Faraday, Suite 101, Irvine CA 92618
Phone 949 595 8004 Fax 949 595 8011

| Revision | Date |
|---|---|
| 100% DESIGN DEVELOPMENT | 10/23/13 |
| 90% CDs - 1ST PLAN CHECK | 12/24/13 |
| 2ND PLAN CHECK | 04/23/14 |

| | |
|---|---|
| Date | |
| IPD Job No. | 13-813 |
| Drawn By | MS |
| Checked By | |
| Scale | AS SHOWN |

CONSTRUCTION DOCUMENTS

Drawing Title
BUILDING SECTIONS

Drawing No.
**A3.03**

IPD, Inc.

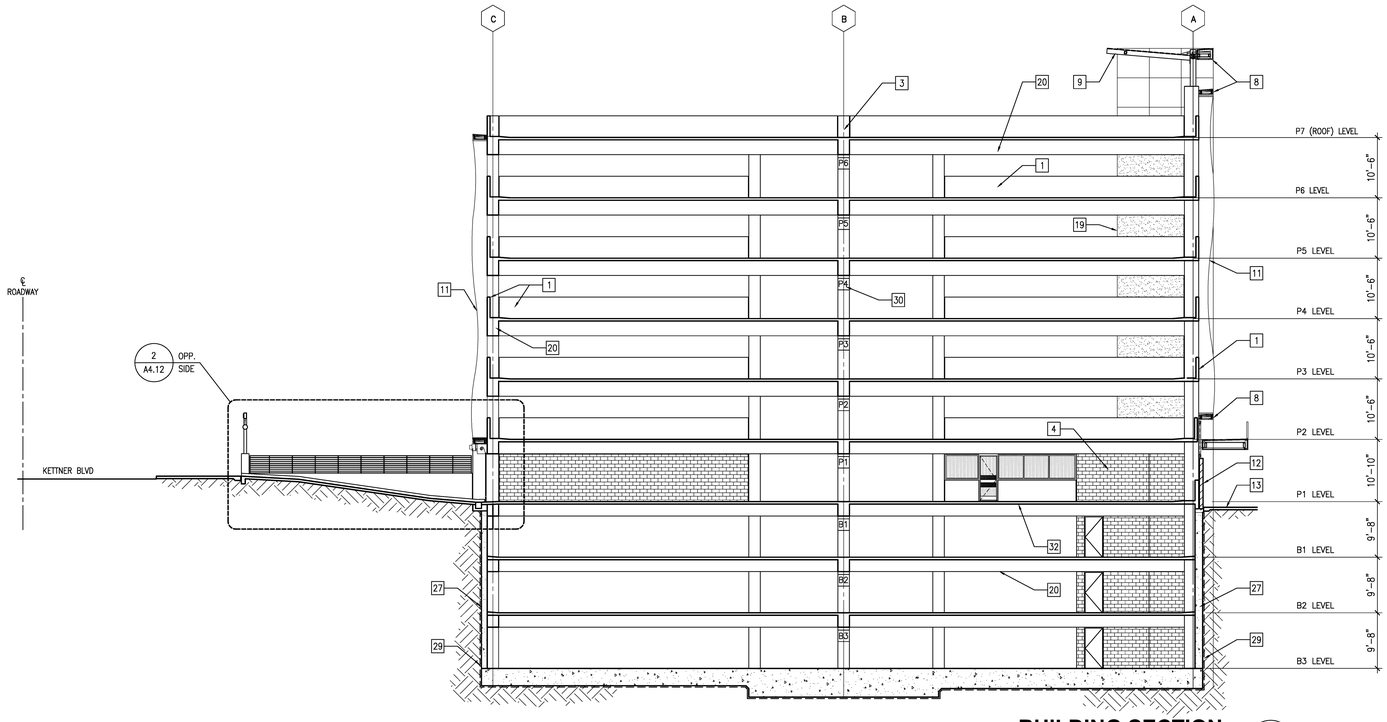


## BUILDING SECTION 2

SCALE: 3/32" = 1'-0"

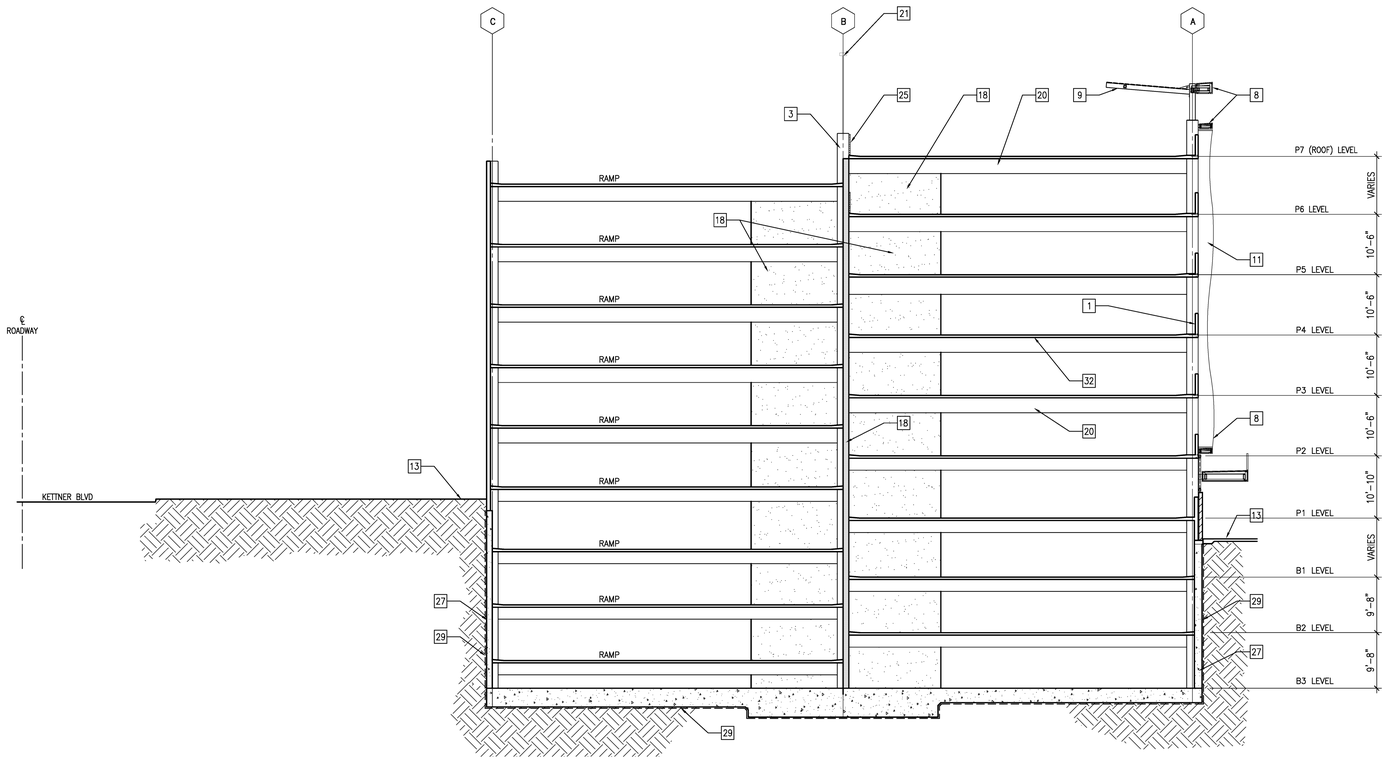


## BUILDING SECTION 1

SCALE: 3/32" = 1'-0"

### BUILDING SECTIONS KEY NOTES

| | | | | | | | | | | | | | |
|---|---|---|---|---|---|---|---|---|---|---|---|---|---|
| 1 | CONCRETE SPANDREL, PAINTED (SEE STRUCT. DWGS.) | 5 | SECURITY SCREENING SET IN ALUMINUM STOREFRONT FRAME | 9 | STEEL SHADE CANOPY SUPPORTS, PAINTED – DEFERRED APPROVAL | 14 | CONCRETE STAIRS ON GRADE | 19 | PORTLAND CEMENT PLASTER OVER METAL STUD FRAMING | 24 | CONCRETE REVEAL, TYP. | 29 | WATERPROOFING – SEE WATERPROOFING DRAWINGS |
| 2 | CONCRETE UPTURNED BEAM, PAINTED, (SEE STRUCT. DWGS.) | 6 | STEEL STAIRS, PAINTED | 10 | STEEL RAILING, PAINTED | 15 | LINE OF STRUCTURE BELOW GRADE | 20 | CONCRETE DOWNTURNED BEAM, PAINTED | 25 | CABLE BARRIER, TYP. | 30 | COLUMN PAINT GRAPHIC |
| 3 | CONCRETE COLUMN, PAINTED (SEE STRUCT. DWGS.) | 7 | METAL SCREENED LOUVER, PAINTED (SEE MECHANICAL DWGS.) | 11 | ANODIZED ALUMINUM FINS SET IN SUPPORT FRAME – DEFERRED APPROVAL | 16 | ILLUMINATED SIGNAGE | 21 | LIGHT STANDARD, SEE ELECT. DWGS. | 26 | CANTILEVERED CONCRETE DECK | 31 | CONC. TRANSFER GIRDER, PAINTED (SEE STRUCT. DWGS.) |
| 4 | CMU WALL, PAINTED | 8 | ALUMINUM COMPOSITE PANELS OVER METAL STUD FRAMING – DEFERRED APPROVAL | 12 | GROUND FACE CMU WALL | 17 | PLASTER CONTROL JOINT, TYP. | 22 | EDGE OF CONCRETE DECK | 27 | RETAINING WALL (SEE STRUCT. DWGS.) | 32 | CONCRETE DECK, PAINTED (SEE STRUCT. DWGS.) |
| | | | | 13 | FINISH SURFACE (SEE CIVIL DWGS.) | 18 | CONCRETE SHEAR WALL | 23 | EXPOSED STEEL SUPPORT, PAINTED | 28 | PARKING CONTROL, SEE PLANS | 33 | CONCRETE CURB |

**County of San Diego**
**Cedar & Kettner**
**Development Project**
San Diego, California

McCARTHY

20401 S.W. BIRCH STREET SUITE 300
Newport Beach, California 92660

Architect

IPD

Alameda
Irvine
Los Angeles

Architecture / Engineering / Consulting
www.ipd-global.com

2 Faraday, Suite 101, Irvine CA 92618
Phone 949 595 8004 Fax 949 595 8011

| Revision | Date |
|---|---|
| 100% DESIGN DEVELOPMENT | 10/23/13 |
| 90% CDs - 1ST PLAN CHECK | 12/24/13 |
| 2ND PLAN CHECK | 04/23/14 |

| | |
|---|---|
| Date | |
| IPD Job No. | 13-813 |
| Drawn By | MS |
| Checked By | |
| Scale | AS SHOWN |

CONSTRUCTION DOCUMENTS

Drawing Title
BUILDING SECTIONS

Drawing No.
**A3.04**

IPD, Inc.

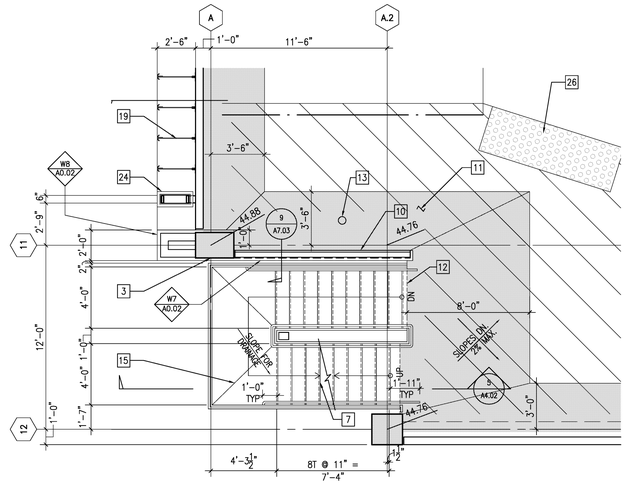


## P3 LEVEL STAIR

SCALE: 1/4" = 1'-0"

6

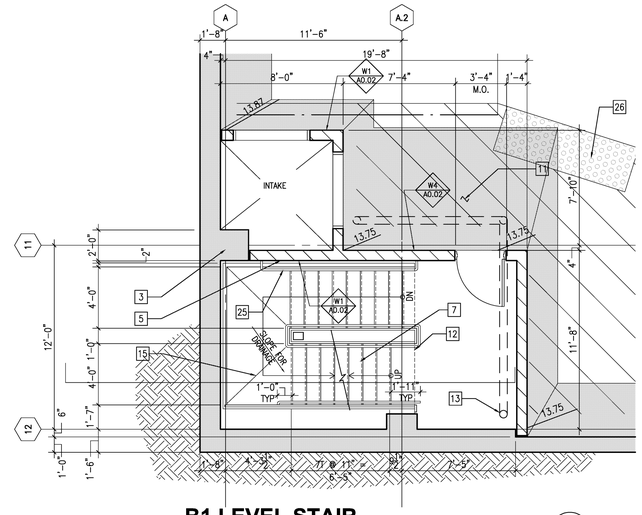


## B1 LEVEL STAIR

SCALE: 1/4" = 1'-0"

3

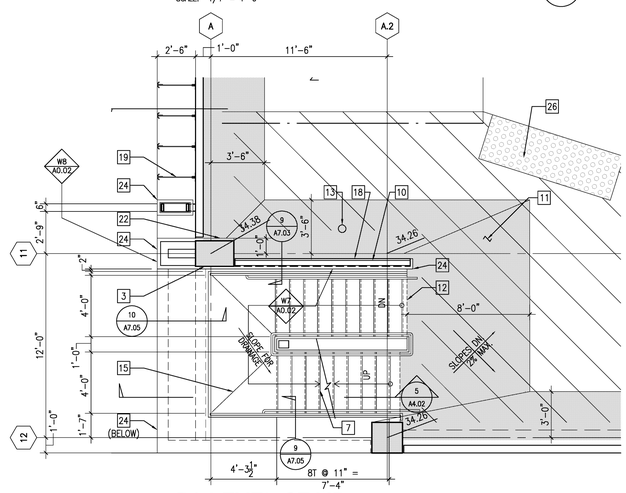


## P2 LEVEL STAIR

SCALE: 1/4" = 1'-0"

5

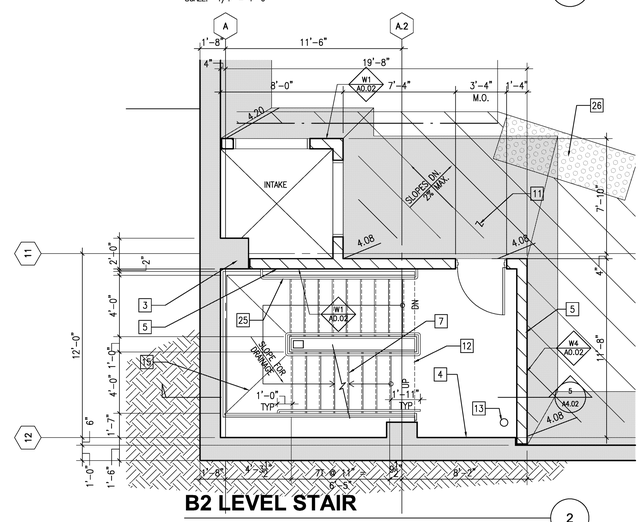


## B2 LEVEL STAIR

SCALE: 1/4" = 1'-0"

2

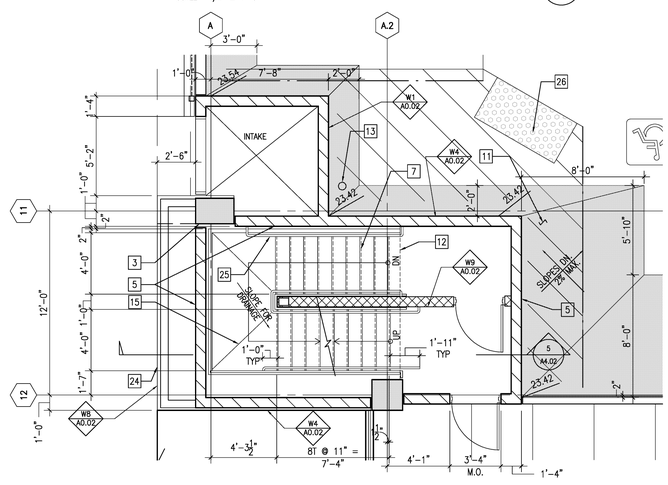


## P1 LEVEL STAIR

SCALE: 1/4" = 1'-0"

4

NOTE:
2-HOUR RATED EXIT ENCLOSURE LEVELS P1 THROUGH B3, SEE SHEET A0.02 FOR RATED WALL ASSEMBLIES AND SHEET A0.01 FOR ADDITIONAL FIRE RATED CONSTRUCTION INFORMATION

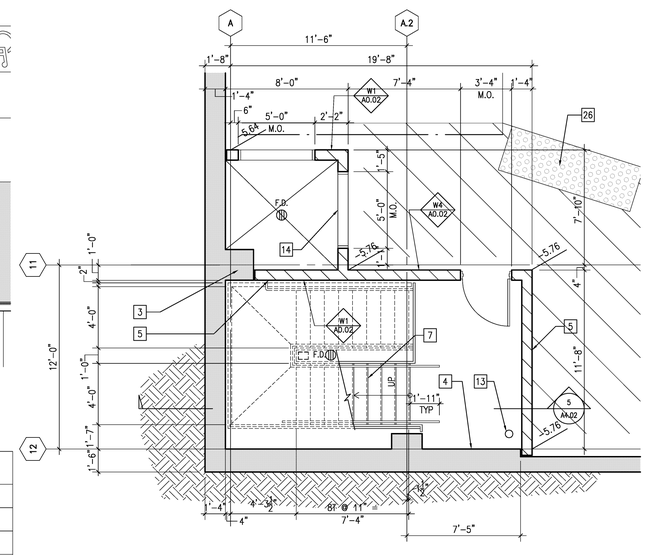


## B3 LEVEL STAIR

SCALE: 1/4" = 1'-0"

1

LEGEND: 2-HOUR FIRE RATED ASSEMBLY

### KEY NOTES

| | | | | | | | | | | | |
|---|---|---|---|---|---|---|---|---|---|---|---|
| 1 | CONCRETE DOWNTURNED BEAM, PAINTED, SEE STRUCT. | 6 | GROUND FACE CMU WALL | 11 | 2" SLAB TRANSITION (WASH) | 16 | CONCRETE DECK, PAINTED (SEE STRUCT. DWGS.) | 21 | EXT. GYP. SHEATHING OVER MTL. STUDS, PAINTED | 26 | SURFACE APPLIED DETECTABLE WARNING STRIP SEE DETAIL 2/A7.02 |
| 2 | CONCRETE SPANDREL, PAINTED | 7 | STEEL STAIR, PAINTED | 12 | EDGE OF SLAB | 17 | CONCRETE FILLED METAL DECK, PAINTED (SEE STRUCT. DWGS.) | 22 | ALUMINUM COMPOSITE PANELS OVER CONCRETE – DEFERRED APPROVAL | | |
| 3 | CONCRETE COLUMN, SEE STRUCT. | 8 | STEEL STAIR POST, PAINTED | 13 | COMBINATION STANDPIPE | 18 | PORTLAND CEMENT PLASTER OVER EXT. GYP. SHEATHING OVER MTL. STUDS | 23 | ALUMINUM COMPOSITE PANELS OVER CMU WALL – DEFERRED APPROVAL | | |
| 4 | CONCRETE RETAINING WALL SEE STRUCT. | 9 | STEEL SHADE CANOPY SUPPORT BEYOND | 14 | VENTILATION LOUVER | 19 | ANODIZED ALUMINUM FINS SET IN SUPPORT FRAME (DEFERRED APPROVAL) | 24 | ALUMINUM COMPOSITE PANELS OVER METAL STUD FRAMING DEFERRED APPROVAL | | |
| 5 | CMU WALL, PAINTED | 10 | CONCRETE SPANDREL BELOW METAL STUDS FRAMING | 15 | CONTROL JOINT, TYP. | 20 | ALUMINUM COVER PLATE, SEE SPECS | 25 | HANDRAIL SEE, DETAIL 8/A7.01 | | |

N

**County of San Diego**
**Cedar & Kettner**
**Development Project**
San Diego, California

McCARTHY
20401 S.W. BIRCH STREET SUITE 300
Newport Beach, California 92660

Architect
IPD
Alameda
Irvine
Los Angeles
Architecture / Engineering / Consulting
www.ipd-global.com
2 Faraday, Suite 101, Irvine CA 92618
Phone 949 595 8004 Fax 949 595 8011

| Revision | Date |
|---|---|
| 100% DESIGN DEVELOPMENT | 10/23/13 |
| 90% CDs - 1ST PLAN CHECK | 12/24/13 |
| 2ND PLAN CHECK | 04/23/14 |

| | |
|---|---|
| Date | |
| IPD Job No. | 13-813 |
| Drawn By | MP |
| Checked By | |
| Scale | AS SHOWN |

CONSTRUCTION DOCUMENTS

Drawing Title
STAIR #1
ENLARGED PLANS

Drawing No.
**A4.01**

IPD, Inc.

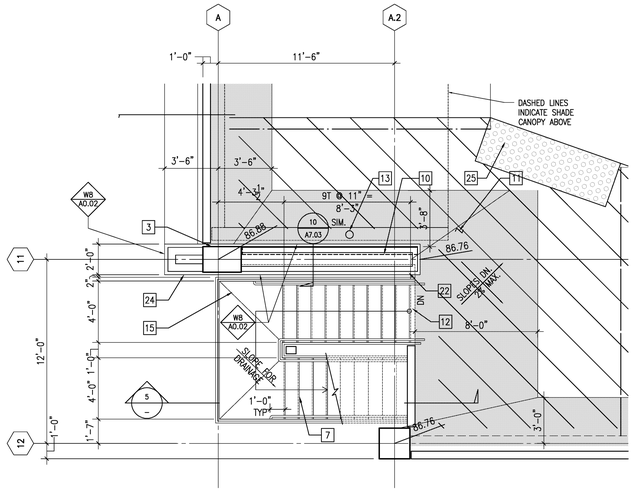


## P7 LEVEL STAIR

SCALE: 1/4" = 1'-0"

4

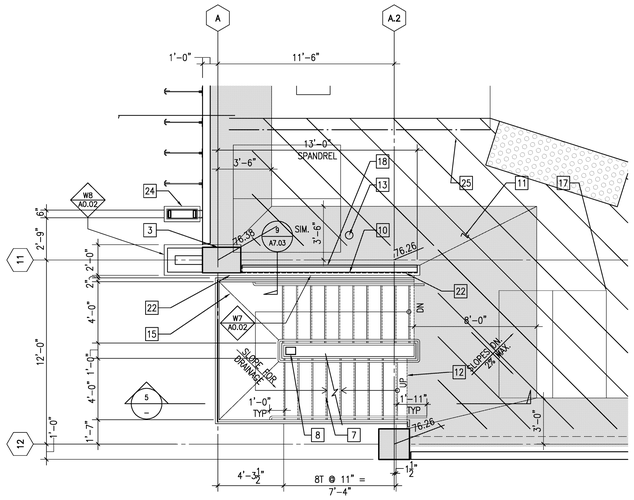


## P6 LEVEL STAIR

SCALE: 1/4" = 1'-0"

3

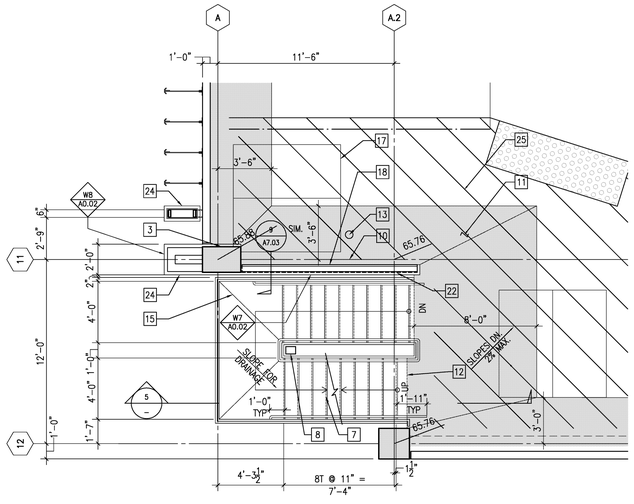


## P5 LEVEL STAIR

SCALE: 1/4" = 1'-0"

2

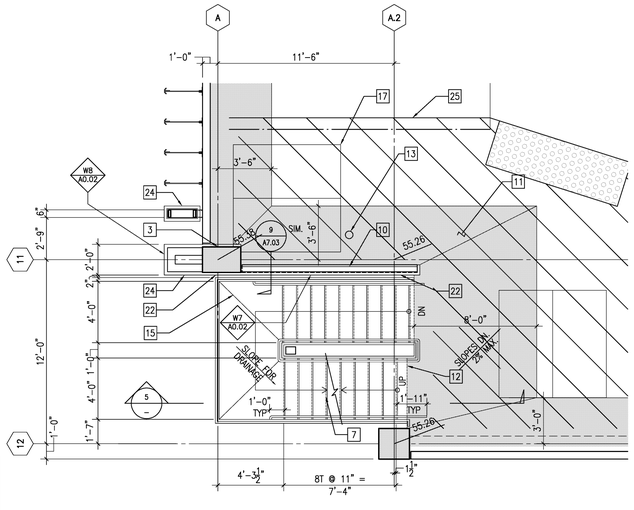


## P4 LEVEL STAIR

SCALE: 1/4" = 1'-0"

1

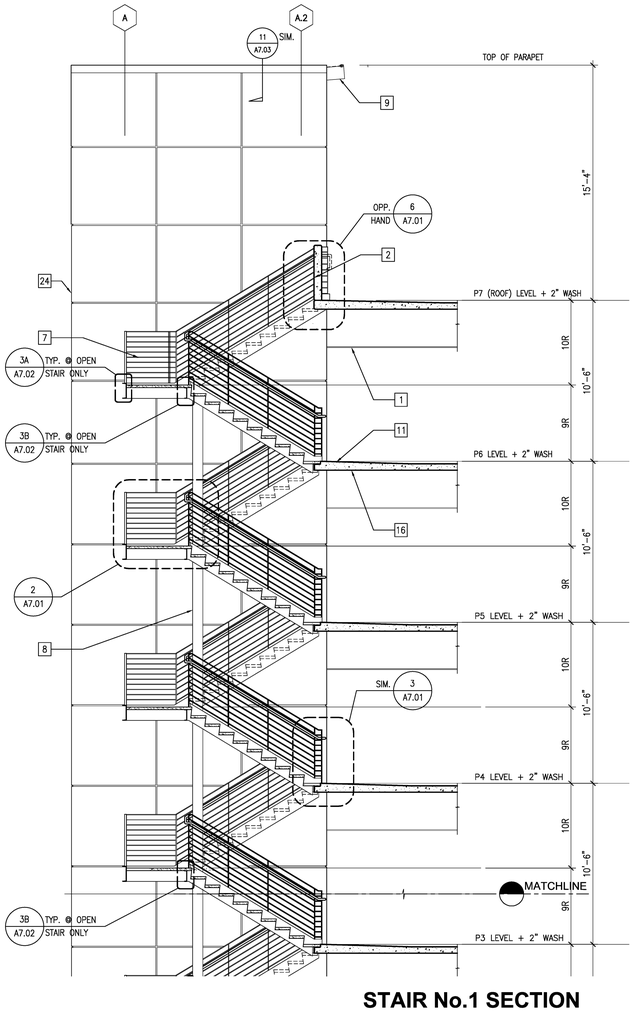


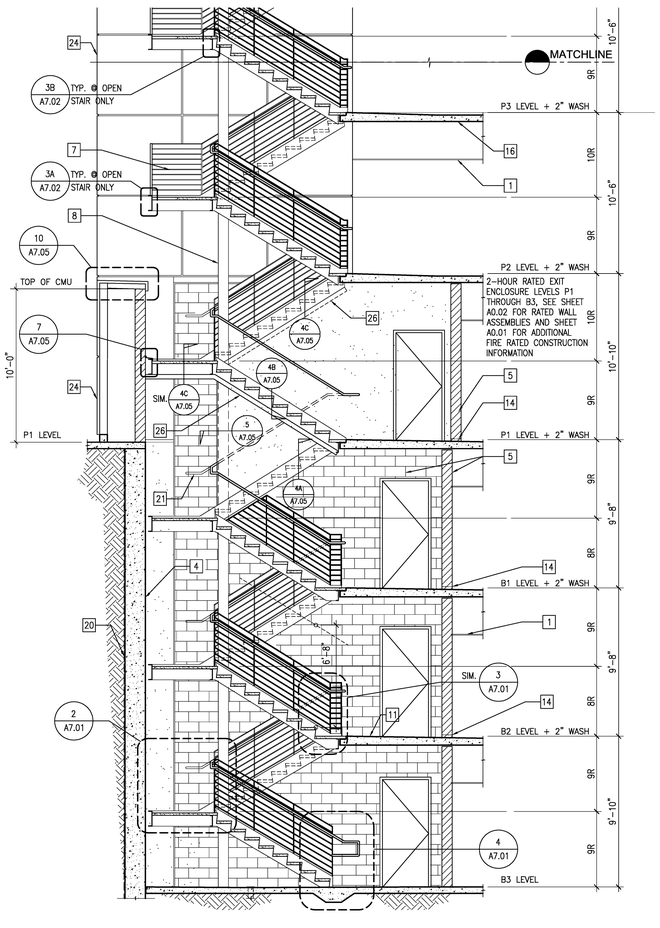


## STAIR No.1 SECTION

SCALE: 1/4" = 1'-0"

5

LEGEND: 2-HOUR FIRE RATED ASSEMBLY

### KEY NOTES

| | | | | | | | | | | | |
|---|---|---|---|---|---|---|---|---|---|---|---|
| 1 | CONCRETE DOWNTURNED BEAM, PAINTED, SEE STRUCT. | 6 | GROUND FACE CMU WALL | 11 | 2" SLAB TRANSITION (WASH) | 16 | CONCRETE DECK, PAINTED (SEE STRUCT. DWGS.) | 21 | HANDRAIL SEE, DETAIL 8/A7.01 | 26 | 2-HR RATED ASSEMBLIES, SEE A0.02 & A7.05 |
| 2 | CONCRETE SPANDREL | 7 | STEEL STAIR, PAINTED | 12 | EDGE OF SLAB | 17 | MOTORCYCLE PARKING SPACE | 22 | ALUMINUM COMPOSITE PANELS OVER CONCRETE – DEFERRED APPROVAL | | |
| 3 | CONCRETE COLUMN, SEE STRUCT. | 8 | STEEL STAIR POST, PAINTED | 13 | COMBINATION STANDPIPE | 18 | PORTLAND CEMENT PLASTER OVER EXT. GYP. SHEATHING OVER MTL. STUDS | 23 | ALUMINUM COMPOSITE PANELS OVER CMU WALL – DEFERRED APPROVAL | | |
| 4 | CONCRETE RETAINING WALL, SEE STRUCT. | 9 | STEEL SHADE CANOPY SUPPORT BEYOND | 14 | SLEEVE THRU WALL | 19 | ANODIZED ALUMINUM FINS SET IN SUPPORT FRAME (DEFERRED APPROVAL) | 24 | ALUMINUM COMPOSITE PANELS OVER METAL STUD FRAMING DEFERRED APPROVAL | | |
| 5 | CMU WALL | 10 | CONCRETE SPANDREL BELOW METAL STUDS FRAMING | 15 | CONTROL JOINT, TYP. | 20 | WATERPROOFING – SEE WATERPROOFING DRAWINGS | 25 | STRIPING, SEE SHEET A9.02 FOR DETAILS | | |

IPD, Inc.

**County of San Diego**
**Cedar & Kettner**
**Development Project**
San Diego, California

McCARTHY

20401 S.W. BIRCH STREET SUITE 300
Newport Beach, California 92660

Architect

IPD

Alameda
Irvine
Los Angeles

Architecture / Engineering / Consulting
www.ipd-global.com

2 Faraday, Suite 101, Irvine CA 92618
Phone 949 595 8004 Fax 949 595 8011

| Revision | Date |
|---|---|
| 100% DESIGN DEVELOPMENT | 10/23/13 |
| 90% CDs - 1ST PLAN CHECK | 12/24/13 |
| 2ND PLAN CHECK | 04/23/14 |

| | |
|---|---|
| Date | |
| IPD Job No. | 13-813 |
| Drawn By | MP |
| Checked By | |
| Scale | AS SHOWN |

CONSTRUCTION DOCUMENTS

Drawing Title

STAIR #1
ENLARGED PLANS
AND SECTION

Drawing No.

**A4.02**

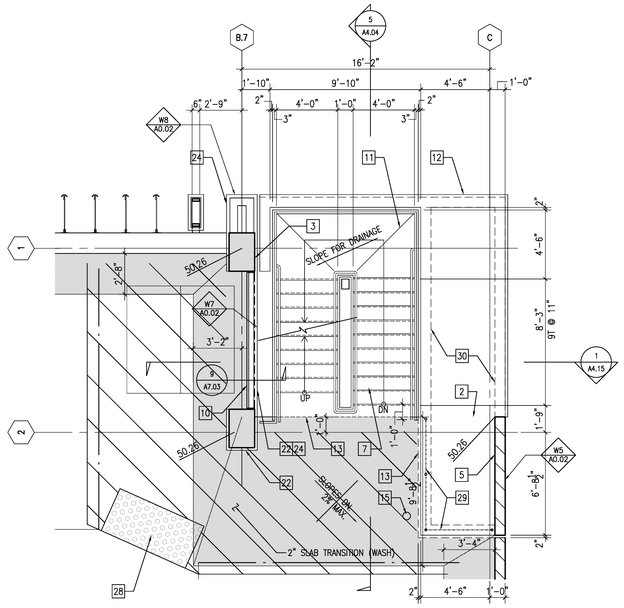


## P3 LEVEL STAIR

SCALE: 1/4" = 1'-0"

6

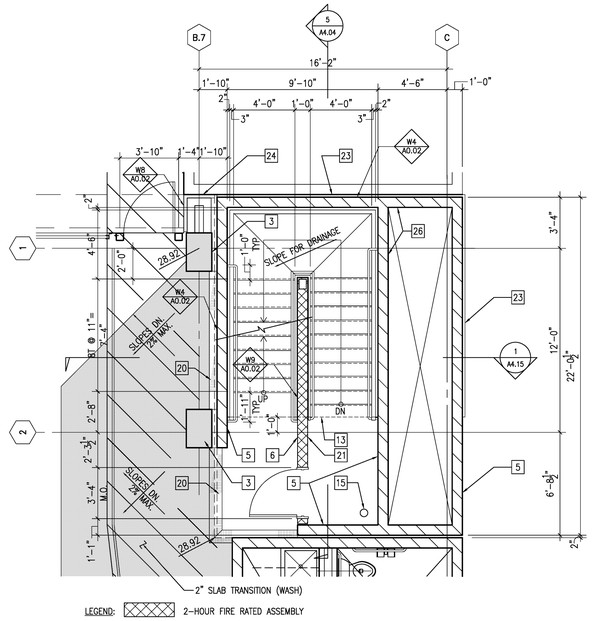


LEGEND: 2-HOUR FIRE RATED ASSEMBLY

## P1 LEVEL STAIR

SCALE: 1/4" = 1'-0"

4

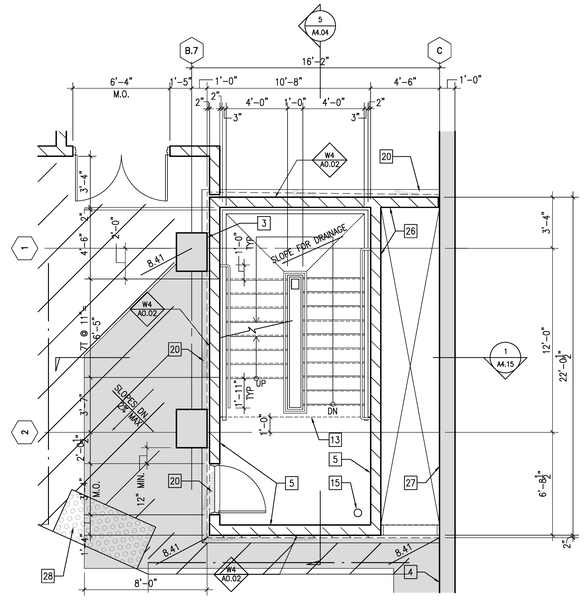


## B2 LEVEL STAIR

SCALE: 1/4" = 1'-0"

2

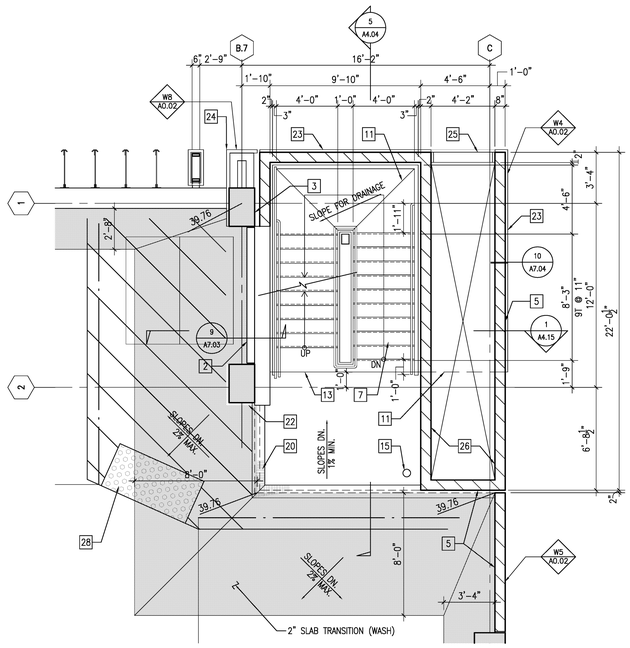


## P2 LEVEL STAIR

SCALE: 1/4" = 1'-0"

5

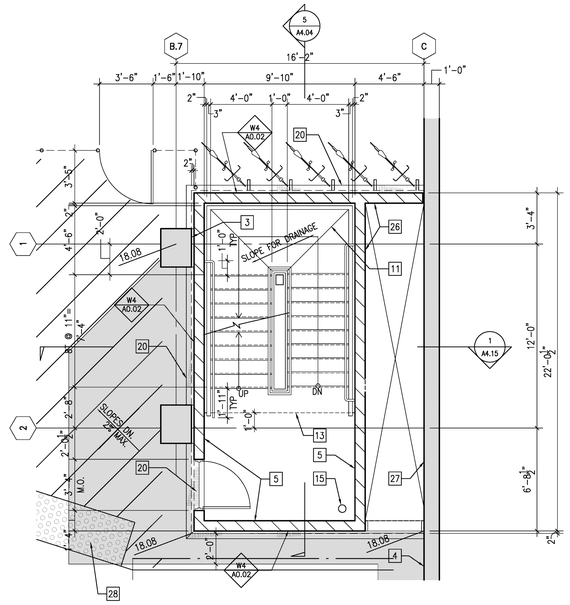


## B1 LEVEL STAIR

SCALE: 1/4" = 1'-0"

3

NOTE:
2-HOUR RATED EXIT ENCLOSURE LEVELS P1 THROUGH B3, SEE SHEET A0.02 FOR RATED WALL ASSEMBLIES AND SHEET A0.01 FOR ADDITIONAL FIRE RATED CONSTRUCTION INFORMATION

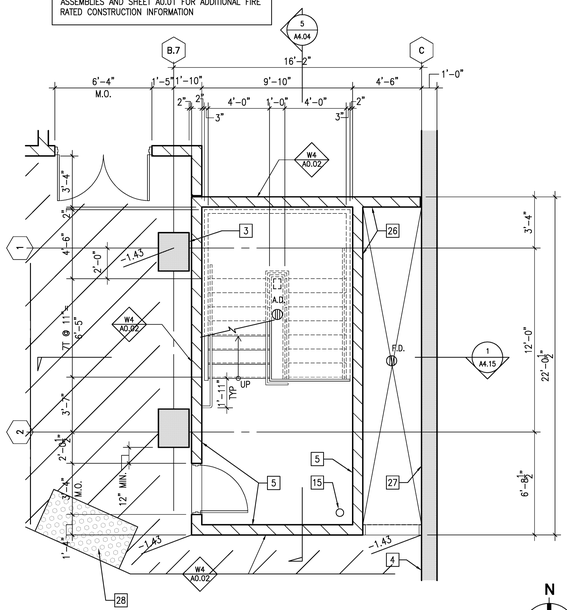


## B3 LEVEL STAIR

SCALE: 1/4" = 1'-0"

1

N

### KEY NOTES

| | | | | | | | | | | | |
|---|---|---|---|---|---|---|---|---|---|---|---|
| 1 | CONCRETE DOWNTURNED BEAM, PAINTED, SEE STRUCT. | 6 | PORTLAND CEMENT PLASTER OVER EXT. GYP. SHEATHING OVER MTL. STUDS | 11 | LINE OF CONCRETE DECK ABOVE | 16 | CONCRETE DECK, PAINTED (SEE STRUCT. DWGS.) | 21 | EXT. GYP. SHEATHING OVER MTL. STUDS, PAINTED | 26 | CMU WALL, NO PAINT |
| 2 | CONCRETE SPANDREL | 7 | STEEL STAIR, PAINTED | 12 | LINE OF ALUMINUM COMPOSITE PANELS OVER CMU WALL BELOW | 17 | CONCRETE FILLED METAL DECK, PAINTED (SEE STRUCT. DWGS.) | 22 | ALUMINUM COMPOSITE PANELS OVER CONCRETE – DEFERRED APPROVAL | 27 | CONCRETE RETAINING WALL, NO PAINT, SEE STRUCT. |
| 3 | CONCRETE COLUMN, SEE STRUCT. | 8 | STEEL STAIR POST, PAINTED | 13 | SLAB EDGE | 18 | CONTROL JOINT, TYP. | 23 | ALUMINUM COMPOSITE PANELS OVER CMU WALL – DEFERRED APPROVAL | 28 | SURFACE APPLIED DETECTABLE WARNING STRIP, 2/A7.02 |
| 4 | CONCRETE RETAINING WALL, SEE STRUCT. | 9 | STEEL SHADE CANOPY SUPPORT BEYOND | 14 | GROUND FACE CMU WALL | 19 | ANODIZED ALUMINUM FINS SET IN SUPPORT FRAME (DEFERRED APPROVAL) | 24 | ALUMINUM COMPOSITE PANELS OVER METAL STUD FRAMING – DEFERRED APPROVAL | 29 | GALV. CHAINLINK TO UNDER SIDE OF DECK ABOVE |
| 5 | CMU WALL, PAINTED | 10 | CONCRETE SPANDREL BELOW METAL STUDS FRAMING, PAINTED | 15 | COMBINATION STANDPIPE | 20 | ALUMINUM COVER PLATE, SEE SPECS | 25 | EXTRUDED STATIONARY LOUVERS | 30 | LINE OF CMU WALL BELOW |

**County of San Diego**
**Cedar & Kettner**
**Development Project**
San Diego, California

McCARTHY

20401 S.W. BIRCH STREET SUITE 300
Newport Beach, California 92660

Architect

IPD

Alameda
Irvine
Los Angeles

Architecture / Engineering / Consulting
www.ipd-global.com

2 Faraday, Suite 101, Irvine CA 92618
Phone 949 595 8004 Fax 949 595 8011

| Revision | Date |
|---|---|
| 100% DESIGN DEVELOPMENT | 10/23/13 |
| 90% CDs - 1ST PLAN CHECK | 12/24/13 |
| 2ND PLAN CHECK | 04/23/14 |

| | |
|---|---|
| Date | |
| IPD Job No. | 13-813 |
| Drawn By | MP |
| Checked By | |
| Scale | AS SHOWN |

CONSTRUCTION DOCUMENTS

Drawing Title

STAIR #2
ENLARGED PLANS

Drawing No.

**A4.03**

IPD, Inc.

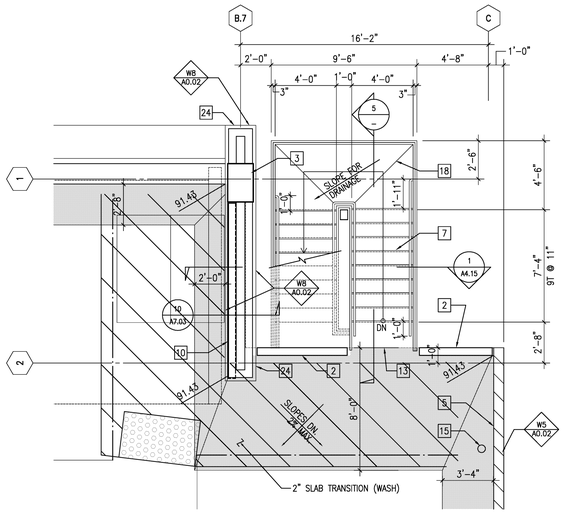


## P7 (ROOF) LEVEL STAIR

SCALE: 1/4" = 1'-0"

4

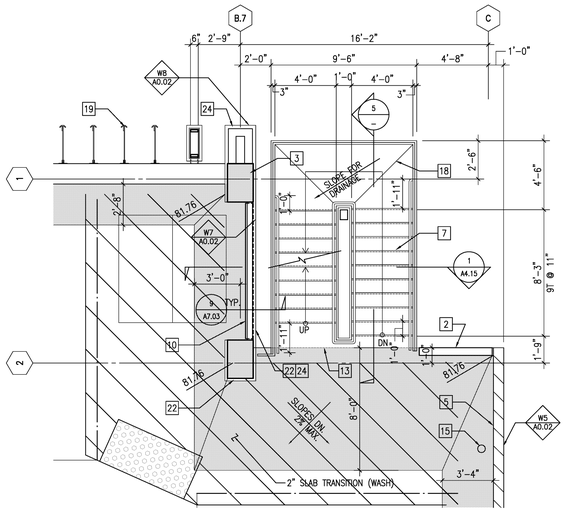


## P6 LEVEL STAIR

SCALE: 1/4" = 1'-0"

3

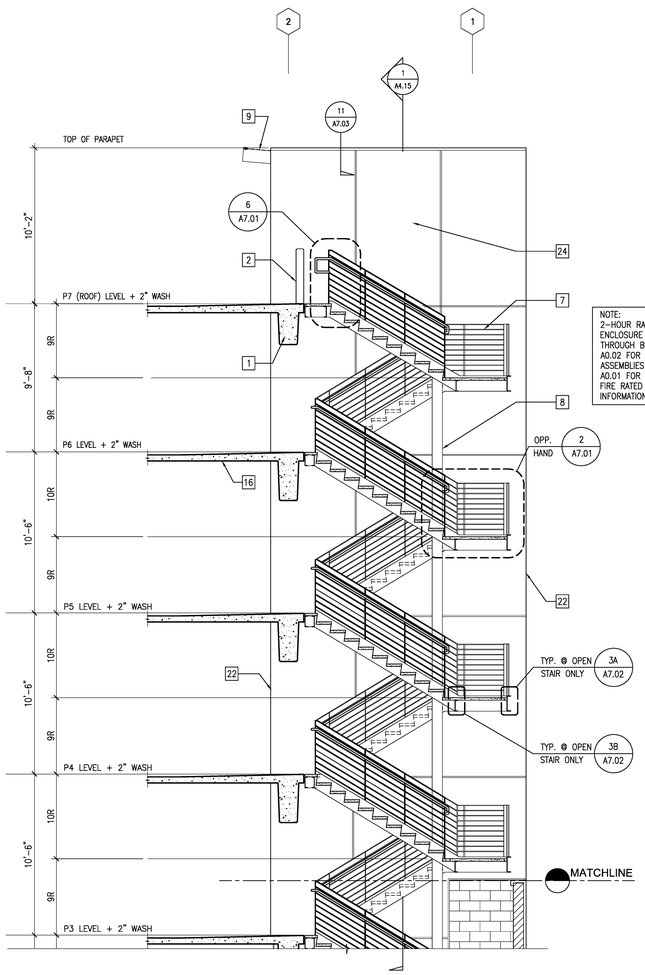


NOTE:
2-HOUR RATED EXIT ENCLOSURE LEVELS P1 THROUGH B3, SEE SHEET A0.02 FOR RATED WALL ASSEMBLIES AND SHEET A0.01 FOR ADDITIONAL FIRE RATED CONSTRUCTION INFORMATION

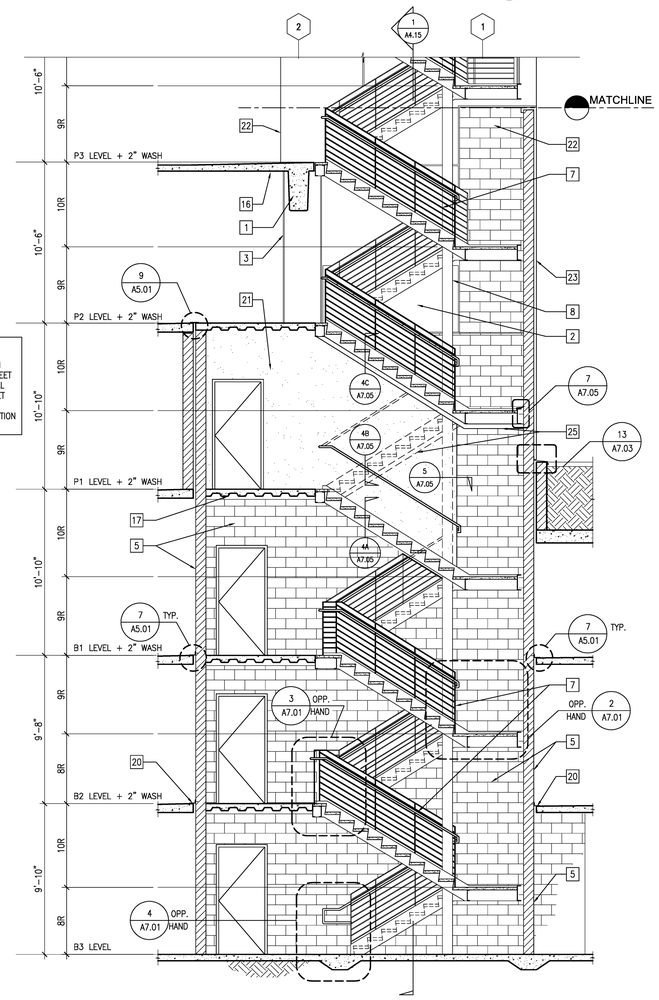


## STAIR No.2 SECTION

SCALE: 1/4" = 1'-0"

5

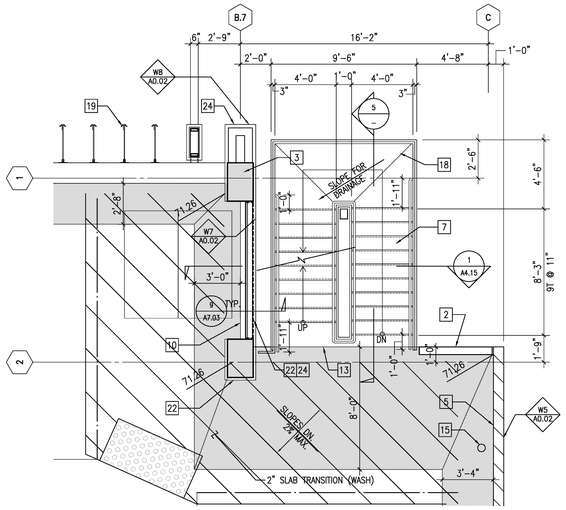


## P5 LEVEL STAIR

SCALE: 1/4" = 1'-0"

2

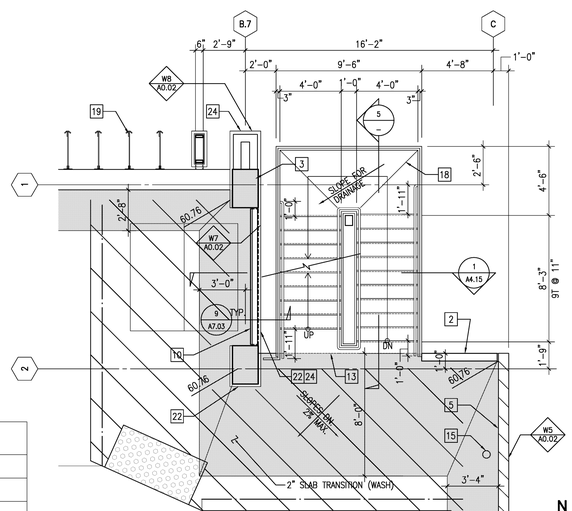


## P4 LEVEL STAIR

SCALE: 1/4" = 1'-0"

1

N

### KEY NOTES

| | | | | | | | | | |
|---|---|---|---|---|---|---|---|---|---|
| 1 | CONCRETE DOWNTURNED BEAM, PAINTED, SEE STRUCT. | 6 | PORTLAND CEMENT PLASTER OVER EXT. GYP. SHEATHING OVER MTL. STUDS | 11 | PLASTER CONTROL JOINT, TYP. | 16 | CONCRETE DECK, PAINTED (SEE STRUCT. DWGS.) | 21 | EXT. GYP. SHEATHING OVER MTL. STUDS, PAINTED |
| 2 | CONCRETE SPANDREL, PAINTED | 7 | STEEL STAIR, PAINTED | 12 | CONCRETE REVEAL, TYP. | 17 | CONCRETE FILLED METAL DECK, PAINTED (SEE STRUCT. DWGS.) | 22 | ALUMINUM COMPOSITE PANELS OVER CONCRETE – DEFERRED APPROVAL |
| 3 | CONCRETE COLUMN, SEE STRUCT. | 8 | STEEL STAIR POST, PAINTED | 13 | SLAB EDGE | 18 | CONTROL JOINT, TYP. | 23 | ALUMINUM COMPOSITE PANELS OVER CMU WALL – DEFERRED APPROVAL |
| 4 | CONCRETE RETAINING WALL, PAINTED, SEE STRUCT. | 9 | STEEL SHADE CANOPY SUPPORT BEYOND | 14 | GROUND FACE CMU WALL | 19 | ANODIZED ALUMINUM FINS SET IN SUPPORT FRAME (DEFERRED APPROVAL) | 24 | ALUMINUM COMPOSITE PANELS OVER METAL STUD FRAMING – DEFERRED APPROVAL |
| 5 | CMU WALL, PAINTED | 10 | CONCRETE SPANDREL BELOW METAL STUDS FRAMING, PAINTED | 15 | COMBINATION STANDPIPE | 20 | ALUMINUM COVER PLATE, SEE SPECS | 25 | 2-HR RATED ASSEMBLIES, SEE A0.02 AND A7.05 |

**County of San Diego**
**Cedar & Kettner**
**Development Project**
San Diego, California

McCARTHY
20401 S.W. BIRCH STREET SUITE 300
Newport Beach, California 92660

Architect
IPD
Alameda
Irvine
Los Angeles
Architecture / Engineering / Consulting
www.ipd-global.com
2 Faraday, Suite 101, Irvine CA 92618
Phone 949 595 8004 Fax 949 595 8011

| Revision | Date |
|---|---|
| 100% DESIGN DEVELOPMENT | 10/23/13 |
| 90% CDs - 1ST PLAN CHECK | 12/24/13 |
| 2ND PLAN CHECK | 04/23/14 |

| | |
|---|---|
| Date | |
| IPD Job No. | 13-813 |
| Drawn By | MP |
| Checked By | |
| Scale | AS SHOWN |

CONSTRUCTION DOCUMENTS

Drawing Title
STAIR #2
ENLARGED PLANS
AND SECTION

Drawing No.
**A4.04**

IPD, Inc.

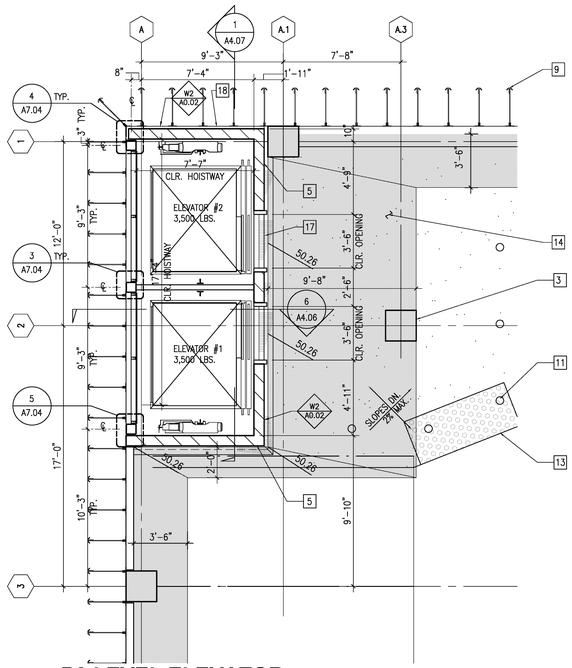


## P3 LEVEL ELEVATOR

SCALE: 1/4" = 1'-0"

7

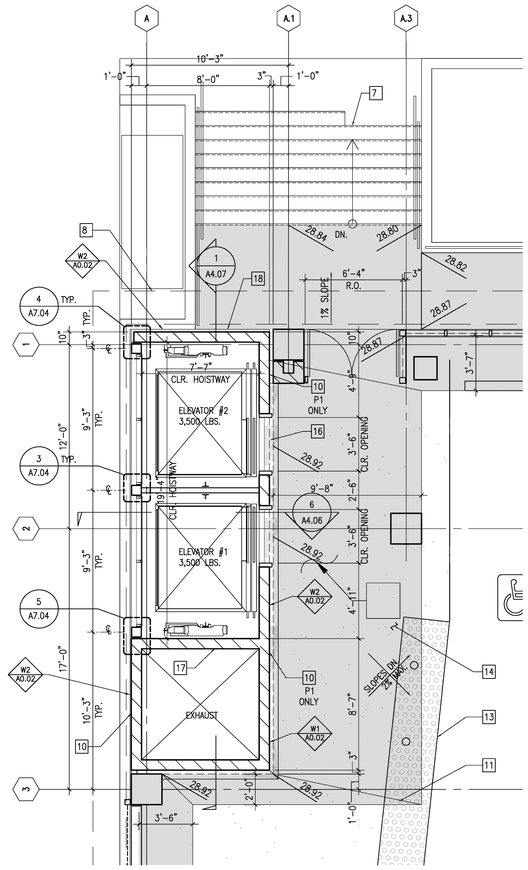


## P1 LEVEL ELEVATOR CORE NO .1

SCALE: 1/4" = 1'-0"

5

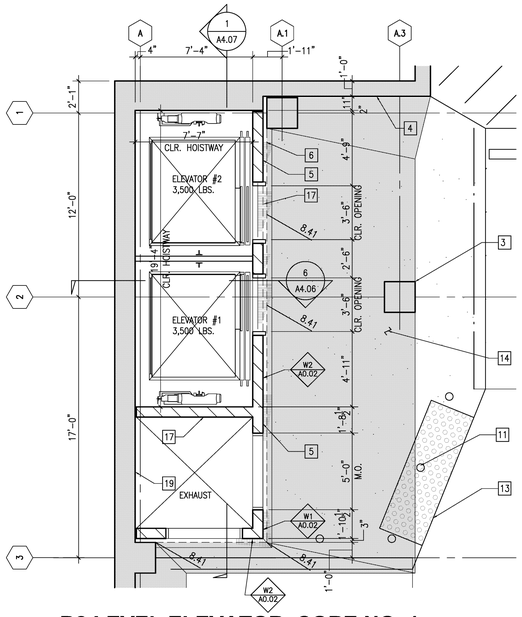


## B2 LEVEL ELEVATOR CORE NO .1

SCALE: 1/4" = 1'-0"

3

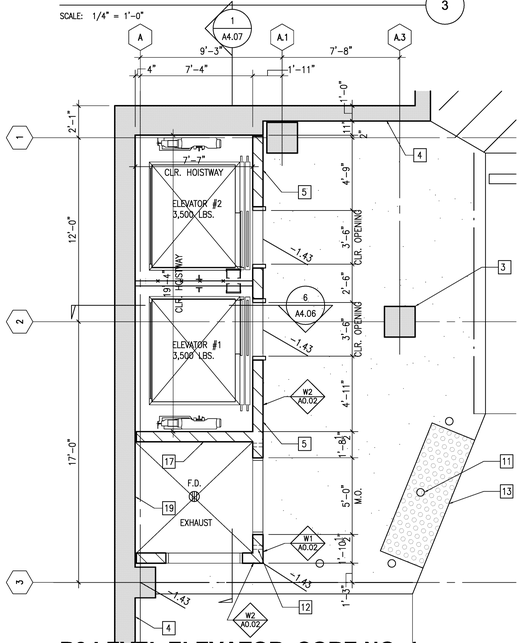


## B3 LEVEL ELEVATOR CORE NO .1

SCALE: 1/4" = 1'-0"

2

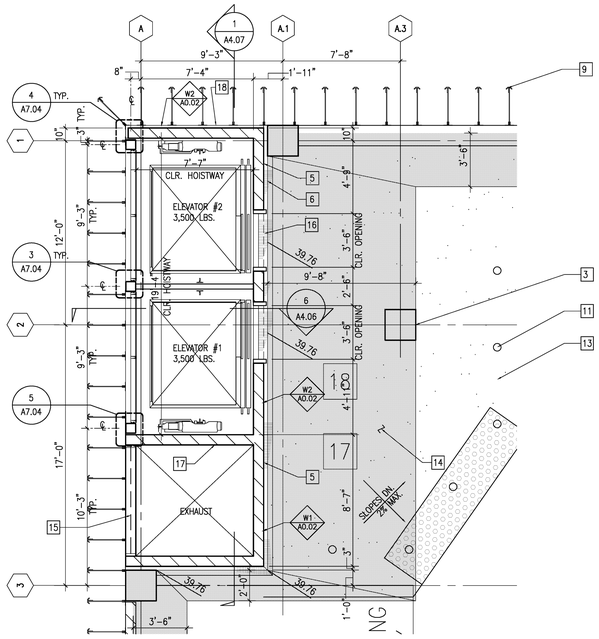


## P2 LEVEL ELEVATOR

SCALE: 1/4" = 1'-0"

6

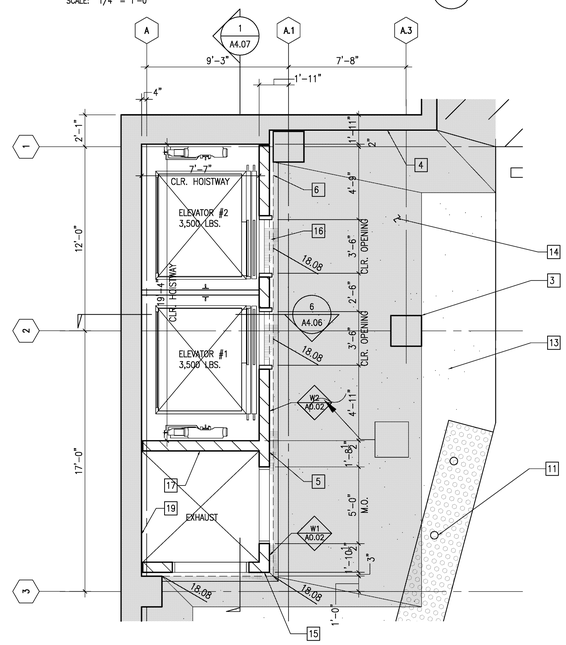


## B1 LEVEL ELEVATOR CORE NO .1

SCALE: 1/4" = 1'-0"

4

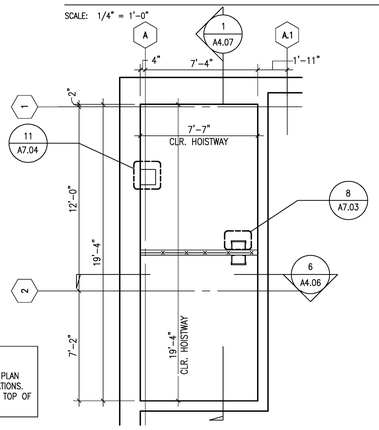


## ELEVATOR PIT PLAN

SCALE: 1/4" = 1'-0"

1

### KEY NOTES

| | | | | | | | |
|---|---|---|---|---|---|---|---|
| 1 | CONCRETE DOWNTURNED BEAM, PAINTED, SEE STRUCT. | 6 | SLAB EDGE | 11 | BOLLARD, SEE 11/A7.02 | 16 | ALUMINUM COVER PLATE, SEE SPECS |
| 2 | CONCRETE SPANDREL, PAINTED | 7 | CONCRETE STAIR ON GRADE | 12 | PROVIDE WEEP HOLES FOR DRAINAGE | 17 | CMU WALL, NO PAINT |
| 3 | CONCRETE COLUMN, PAINTED, SEE STRUCT. | 8 | LINE OF EYEBROW PROJECTION ABOVE, SEE ELEVATIONS AND A7.05 | 13 | STRIPING, SEE SHEET A9.02 FOR DETAILS | 18 | ALUMINUM COMPOSITE PANELS OVER CMU WALL – DEFERRED APPROVAL |
| 4 | CONCRETE RETAINING WALL, PAINTED, SEE STRUCT. | 9 | ANODIZED ALUMINUM FINS SET IN SUPPORT FRAME (DEFERRED APPROVAL) | 14 | 2" SLAB TRANSITION (WASH) | 19 | CONCRETE RETAINING WALL, NO PAINT, SEE STRUCT. |
| 5 | CMU WALL, PAINTED | 10 | GROUND FACE CMU WALL | 15 | METAL SCREENED LOUVER, PAINTED (SEE MECHANICAL DWGS.) | | |

NOTES:
1. HOISTWAY "CLEAR" DIMENSIONS SHOWN ARE MANUFACTURER MINIMUM CLEARANCES. REFER TO PLAN DIMENSIONS AND DETAILS FOR ACTUAL WALL LOCATIONS.
2. SPOT ELEVATIONS SHOWN ON THIS SHEET ARE TOP OF CONCRETE WASH.

N

**County of San Diego**
**Cedar & Kettner**
**Development Project**
San Diego, California

McCARTHY
20401 S.W. BIRCH STREET SUITE 300
Newport Beach, California 92660

Architect
IPD
Alameda
Irvine
Los Angeles
Architecture / Engineering / Consulting
www.ipd-global.com
2 Faraday, Suite 101, Irvine CA 92618
Phone 949 595 8004 Fax 949 595 8011

| Revision | Date |
|---|---|
| 100% DESIGN DEVELOPMENT | 10/23/13 |
| 90% CDs - 1ST PLAN CHECK | 12/24/13 |
| 2ND PLAN CHECK | 04/23/14 |

| | |
|---|---|
| Date | |
| IPD Job No. | 13-813 |
| Drawn By | MP |
| Checked By | |
| Scale | AS SHOWN |

CONSTRUCTION DOCUMENTS

Drawing Title
ENLARGED ELEVATOR CORE NO. 1

Drawing No.
**A4.05**

IPD, Inc.

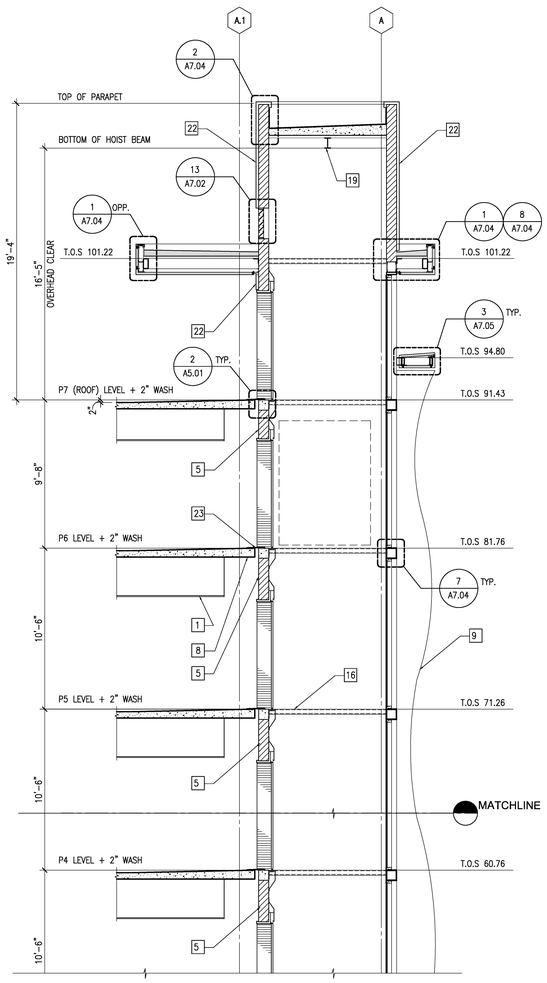


## ELEVATOR SECTION

SCALE: 1/4" = 1'-0"

6

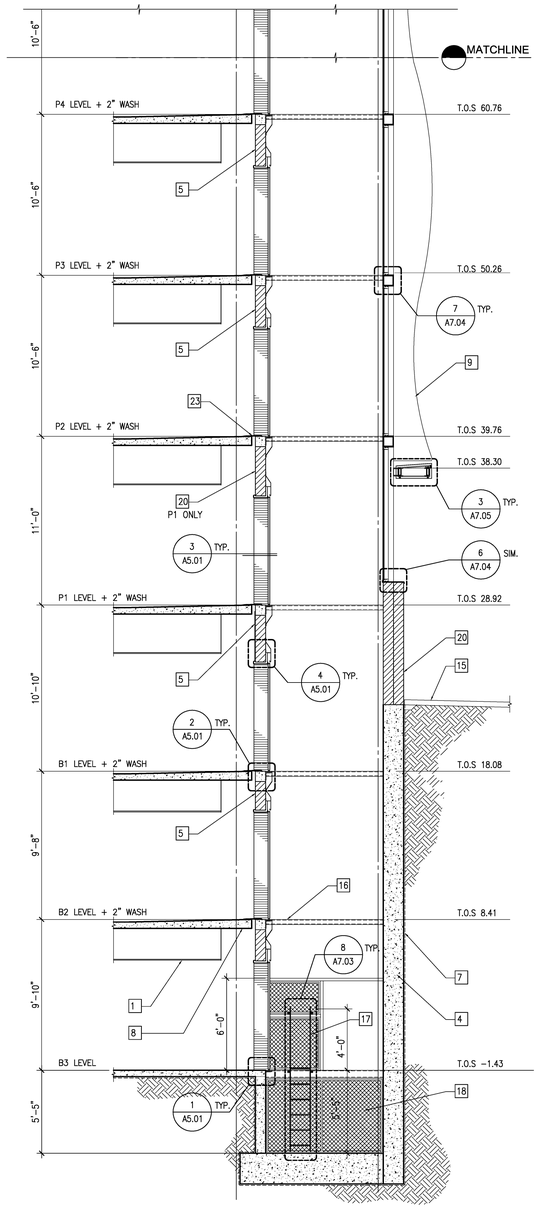


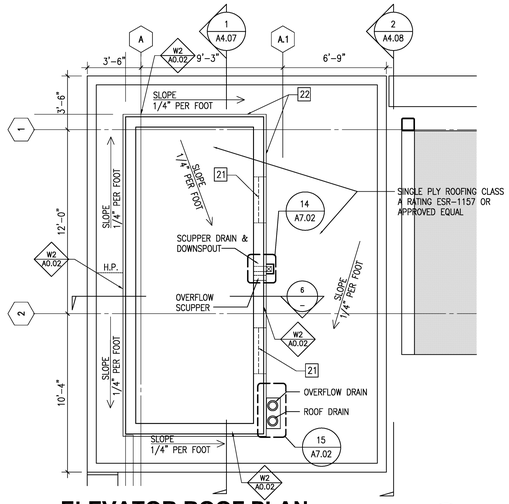


## ELEVATOR ROOF PLAN

SCALE: 1/4" = 1'-0"

5

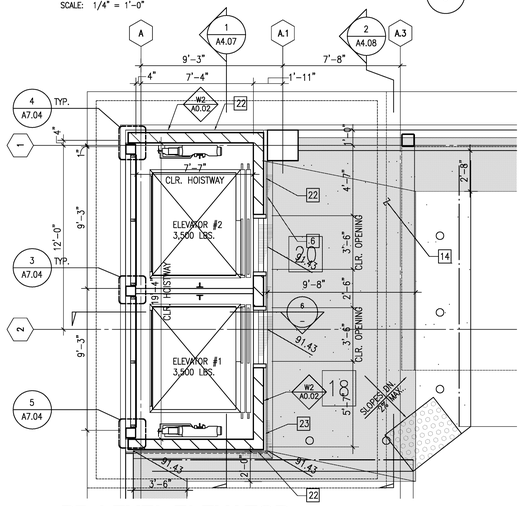


## P7 LEVEL ELEVATOR

SCALE: 1/4" = 1'-0"

4

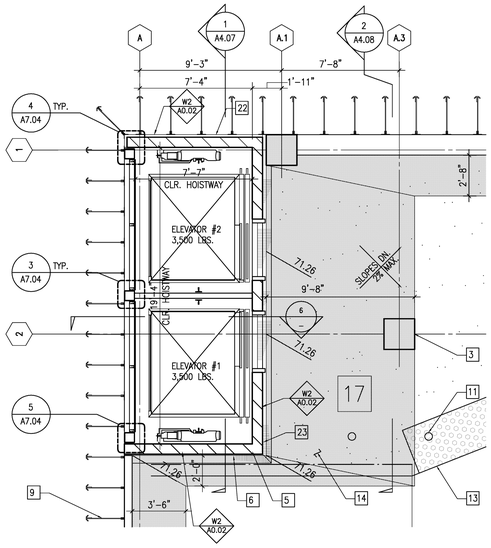


## P5 LEVEL ELEVATOR

SCALE: 1/4" = 1'-0"

2

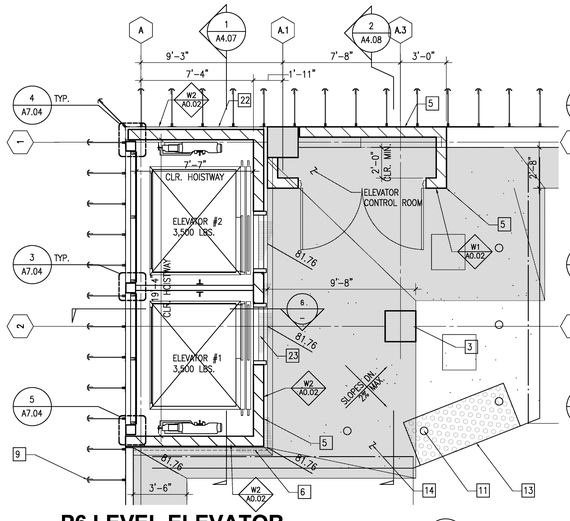


## P6 LEVEL ELEVATOR

SCALE: 1/4" = 1'-0"

3

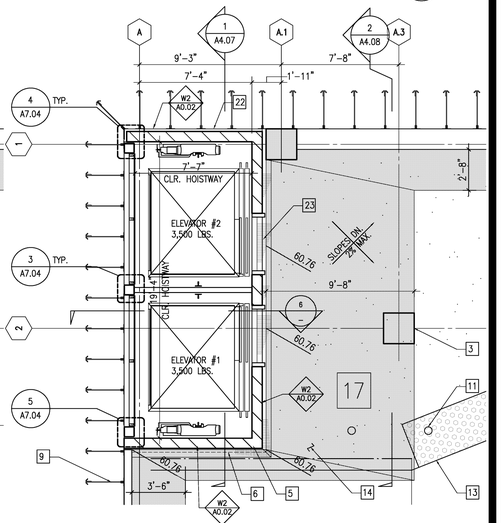


## P4 LEVEL ELEVATOR

SCALE: 1/4" = 1'-0"

1

NOTES:
1. HOISTWAY "CLEAR" DIMENSIONS SHOWN ARE MANUFACTURER MINIMUM CLEARANCES. REFER TO PLAN DIMENSIONS AND DETAILS FOR ACTUAL WALL LOCATIONS.
2. SPOT ELEVATIONS SHOWN ON THIS SHEET ARE TOP OF CONCRETE WASH.

N

### KEY NOTES

| | | | | | | | | | |
|---|---|---|---|---|---|---|---|---|---|
| 1 | CONCRETE DOWNTURNED BEAM, PAINTED, SEE STRUCT. | 6 | SLAB EDGE | 11 | BOLLARD, SEE 11/A7.02 | 16 | ELEVATOR SEPARATOR BEAM | 21 | METAL SCREENED LOUVER, PAINTED (SEE MECHANICAL DWGS.) |
| 2 | CONCRETE SPANDREL, PAINTED | 7 | WATERPROOFING – SEE WATERPROOFING DRAWINGS | 12 | PROVIDE WEEP HOLES FOR DRAINAGE | 17 | ELEVATOR PIT LADDER | 22 | ALUMINUM COMPOSITE PANELS OVER CMU WALL – DEFERRED APPROVAL |
| 3 | CONCRETE COLUMN, PAINTED, SEE STRUCT. | 8 | CONCRETE DECK, SOFFIT PAINTED (SEE STRUCT. DWGS.) | 13 | STRIPING, SEE SHEET A9.02 FOR DETAILS | 18 | ELEVATOR SCREEN SEPARATOR | 23 | ALUMINUM COVER PLATE, SEE SPECS |
| 4 | CONCRETE RETAINING WALL, PAINTED, SEE STRUCT. | 9 | ANODIZED ALUMINUM FINS SET IN SUPPORT FRAME (DEFERRED APPROVAL) | 14 | 2" SLAB TRANSITION (WASH) | 19 | ELEVATOR HOIST BEAM | | |
| 5 | CMU WALL, PAINTED | 10 | DIRECT APPLIED PORTLAND CEMENT PLASTER OVER CMU WALL | 15 | FINISH SURFACE (SEE CIVIL DWGS.) | 20 | GROUND FACE CMU WALL | | |

IPD, Inc.

**County of San Diego Cedar & Kettner Development Project**
San Diego, California

McCARTHY
20401 S.W. BIRCH STREET SUITE 300
Newport Beach, California 92660

Architect
IPD
Alameda
Irvine
Los Angeles
Architecture / Engineering / Consulting
www.ipd-global.com
2 Faraday, Suite 101, Irvine CA 92618
Phone 949 595 8004 Fax 949 595 8011

| Revision | Date |
|---|---|
| 100% DESIGN DEVELOPMENT | 10/23/13 |
| 90% CDs - 1ST PLAN CHECK | 12/24/13 |
| 2ND PLAN CHECK | 04/23/14 |

| | |
|---|---|
| Date | |
| IPD Job No. | 13-813 |
| Drawn By | MP |
| Checked By | |
| Scale | AS SHOWN |

CONSTRUCTION DOCUMENTS

Drawing Title
ENLARGED ELEVATOR CORE AND SECTION

Drawing No.
**A4.06**

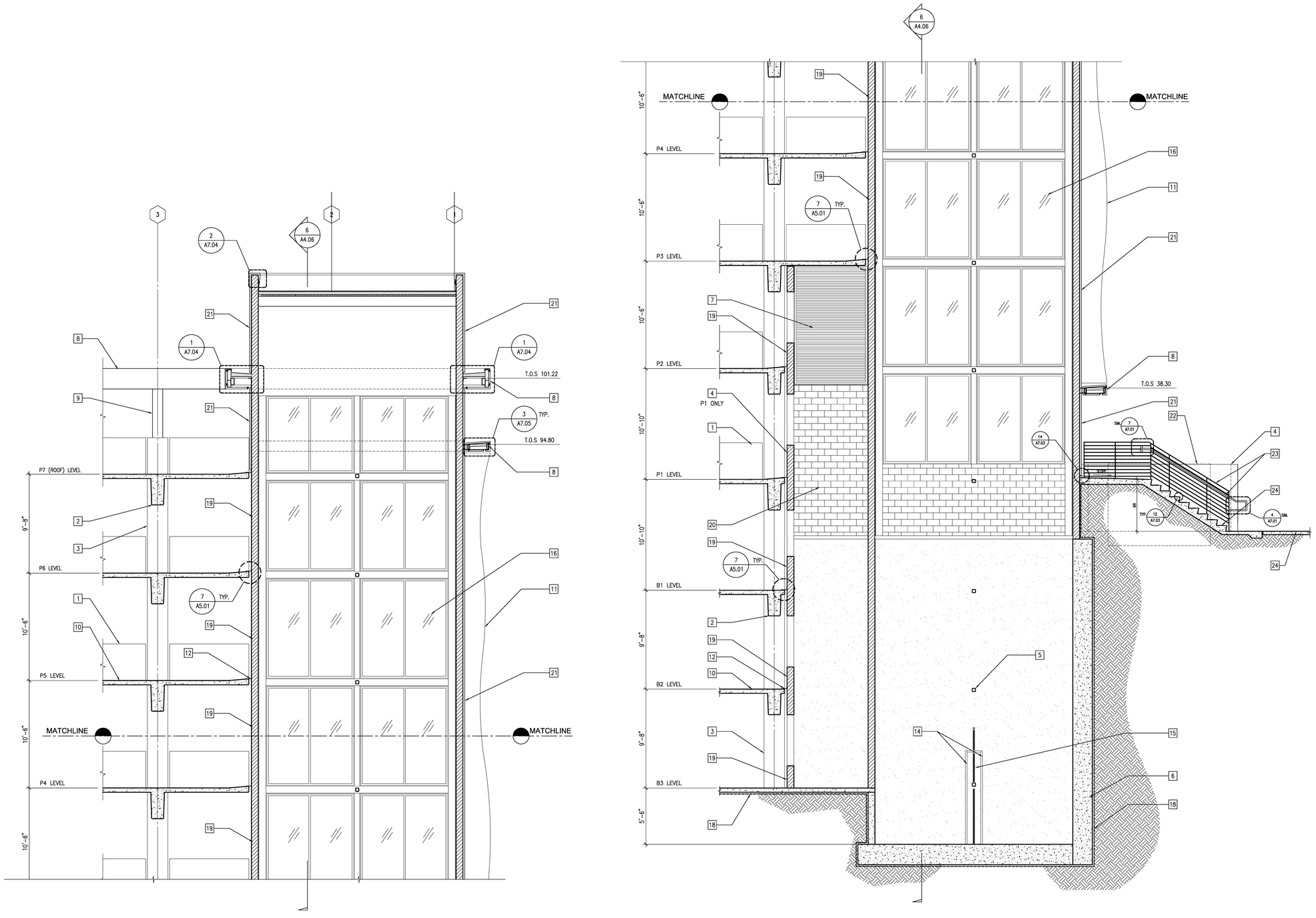


## ELEVATOR SECTION

SCALE: 1/4" = 1'-0"

1

### KEY NOTES

| | | | | | | | | | |
|---|---|---|---|---|---|---|---|---|---|
| 1 | CONCRETE SPANDREL, PAINTED | 6 | CONCRETE RETAINING WALL, PAINTED, SEE STRUCT. DWGS. | 11 | ANODIZED ALUMINUM FINS SET IN SUPPORT FRAME, DEFERRED APPROVAL | 16 | GLAZING SET IN ALUMINUM STOREFRONT WINDOW | 21 | ALUMINUM COMPOSITE PANELS OVER CMU WALL – DEFERRED APPROVAL |
| 2 | CONCRETE DOWNTURNED BEAM, PAINTED, SEE STRUCT. DWGS. | 7 | METAL SCREENED LOUVER, PAINTED (SEE MECHANICAL DWGS.) | 12 | ALUMINUM COVER PLATE, SEE SPECS | 17 | PLANTER, SEE LANDSCAPE DRAWINGS | 22 | MTS EQUIPMENT BEYOND – UNDER SEPARATE PERMIT |
| 3 | CONCRETE COLUMN, PAINTED | 8 | ALUMINUM COMPOSITE PANELS OVER METAL STUD FRAMING – DEFERRED APPROVAL | 13 | FINISH SURFACE (SEE CIVIL DWGS.) | 18 | WATERPROOFING (SEE WATERPROOFING DRAWINGS) | 23 | GUARDRAIL/HANDRAIL, PAINTED |
| 4 | GROUND FACE CMU | 9 | STEEL SHADE CANOPY SUPPORTS, PAINTED DEFERRED APPROVAL | 14 | ELEVATOR PIT LADDER | 19 | CMU WALL, PAINTED | 24 | CONCRETE STEPS ON GRADE |
| 5 | ELEVATOR SEPARATOR BEAM | 10 | CONCRETE STRUCTURAL DECK, SEE STRUCT. DWGS. | 15 | ELEVATOR SCREEN SEPARATOR | 20 | CMU WALL, NO PAINT | 24 | CONCRETE SIDEWALK – SEE CIVIL DWGS |

**County of San Diego**
**Cedar & Kettner**
**Development Project**
San Diego, California

McCARTHY

20401 S.W. BIRCH STREET SUITE 300
Newport Beach, California 92660

Architect

IPD

Alameda
Irvine
Los Angeles

Architecture / Engineering / Consulting
www.ipd-global.com

2 Faraday, Suite 101, Irvine CA 92618
Phone 949 595 8004 Fax 949 595 8011

| Revision | Date |
|---|---|
| 100% DESIGN DEVELOPMENT | 10/23/13 |
| 90% CDs - 1ST PLAN CHECK | 12/24/13 |
| 2ND PLAN CHECK | 04/23/14 |

| | |
|---|---|
| Date | |
| IPD Job No. | 13-813 |
| Drawn By | MS |
| Checked By | |
| Scale | AS SHOWN |

CONSTRUCTION DOCUMENTS

Drawing Title

ELEVATOR SECTION

Drawing No.

**A4.07**

IPD, Inc.

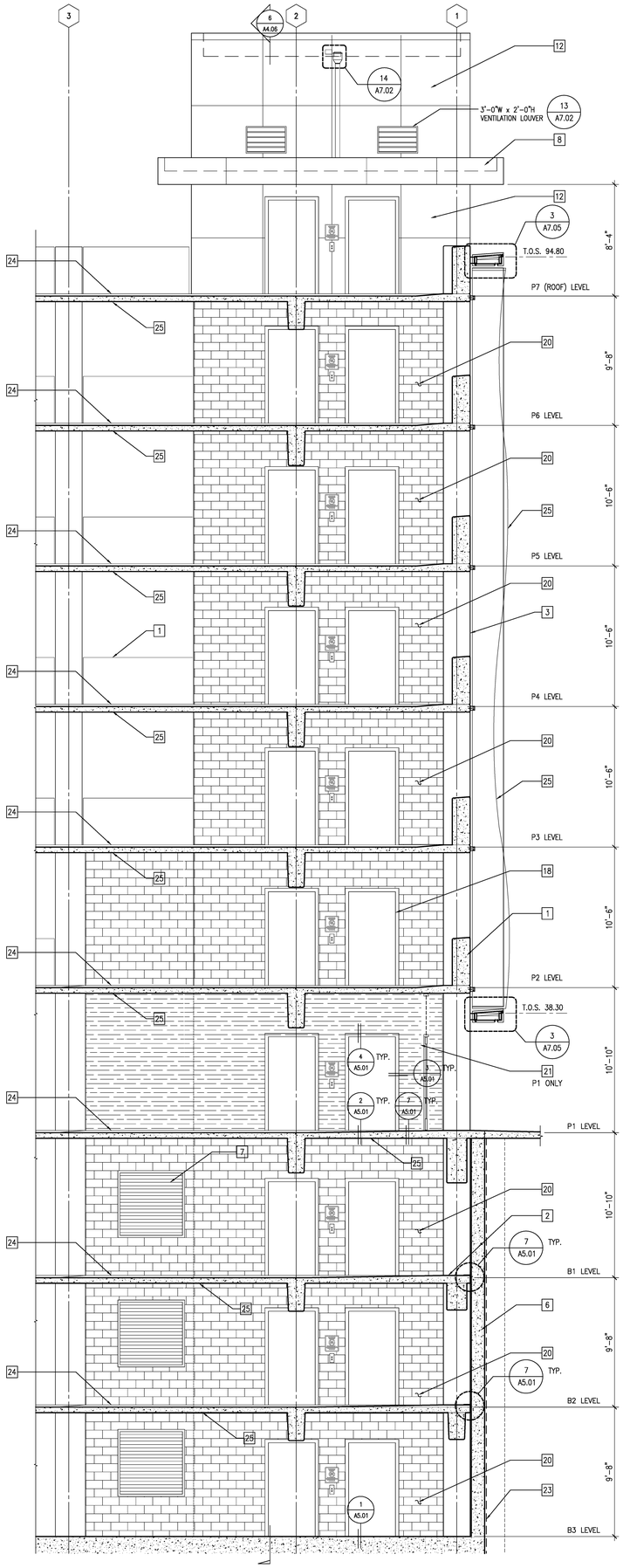


## ELEVATOR INTERIOR ELEVATION

SCALE: 1/4" = 1'-0"

2

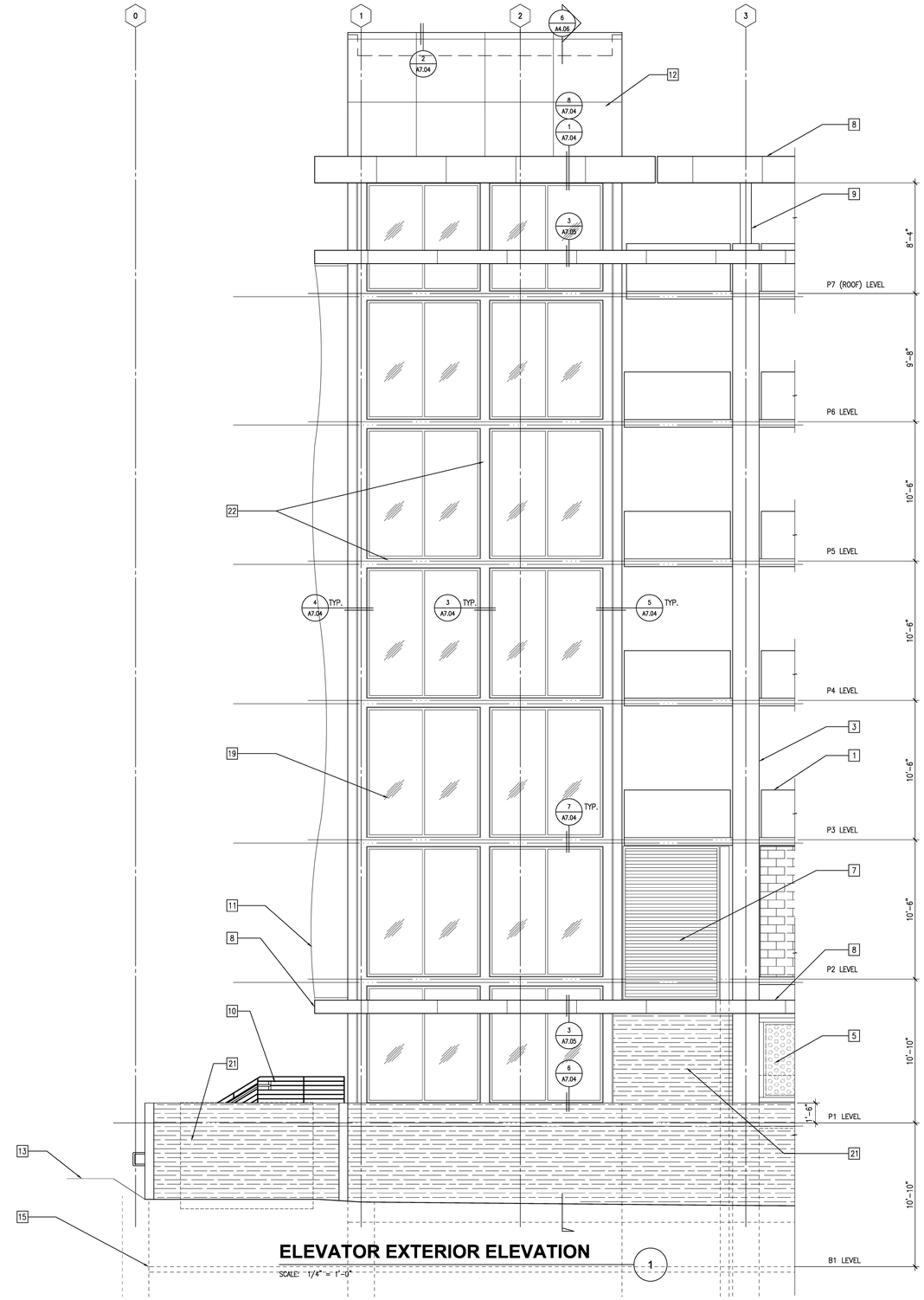


## ELEVATOR EXTERIOR ELEVATION

SCALE: 1/4" = 1'-0"

1

| KEY NOTES | | | | | | | | | |
|---|---|---|---|---|---|---|---|---|---|
| 1 | CONCRETE SPANDREL, PAINTED | 6 | CONCRETE RETAINING WALL, SEE STRUCT. DWGS. | 11 | ANODIZED ALUMINUM FINS SET IN SUPPORT FRAME, DEFERRED APPROVAL | 16 | ILLUMINATED SIGNAGE | 21 | GROUND FACE CMU WALL |
| 2 | CONCRETE STRUCTURAL DECK, SEE STRUCT. DWGS. | 7 | METAL SCREENED LOUVER, PAINTED (SEE MECHANICAL DWGS.) | 12 | ALUMINUM COMPOSITE PANELS OVER CMU WALL, DEFERRED APPROVAL | 17 | PLASTER CONTROL JOINT, TYP. | 22 | BREAK METAL OVER STEEL FRAME |
| 3 | CONCRETE COLUMN, PAINTED | 8 | ALUMINUM COMPOSITE PANELS OVER METAL STUD FRAMING, DEFERRED APPROVAL | 13 | FINISH SURFACE (SEE CIVIL DWGS.) | 18 | ELEVATOR DOOR FRAME | 23 | WATERPROOFING (SEE WATERPROOFING DRAWINGS) |
| 4 | DIRECT APPLIED PORTLAND CEMENT PLASTER OVER CMU | 9 | STEEL SHADE CANOPY SUPPORTS, PAINTED | 14 | CONCRETE STAIRS ON GRADE | 19 | GLAZING SET IN ALUMINUM STOREFRONT WINDOW | 24 | LINE OF 2" CONCRETE WASH BEYOND |
| 5 | SECURITY SCREENING SET IN ALUMINUM STOREFRONT FRAME | 10 | STEEL RAILING, PAINTED | 15 | LINE OF STRUCTURE BELOW GRADE | 20 | CMU WALL, PAINTED | 25 | CONCRETE SLAB, PAINTED (SEE STRUCT. DWGS.) |

**County of San Diego**
**Cedar & Kettner**
**Development Project**
San Diego, California

McCARTHY

20401 S.W. BIRCH STREET SUITE 300
Newport Beach, California 92660

Architect

IPD

Alameda
Irvine
Los Angeles

Architecture / Engineering / Consulting
www.ipd-global.com

2 Faraday, Suite 101, Irvine CA 92618
Phone 949 595 8004 Fax 949 595 8011

| Revision | Date |
|---|---|
| 100% DESIGN DEVELOPMENT | 10/23/13 |
| 90% CDs - 1ST PLAN CHECK | 12/24/13 |
| 2ND PLAN CHECK | 04/23/14 |

| | |
|---|---|
| Date | |
| IPD Job No. | 13-813 |
| Drawn By | SN |
| Checked By | |
| Scale | AS SHOWN |

CONSTRUCTION DOCUMENTS

Drawing Title

ELEVATOR EXTERIOR AND INTERIOR ELEVATIONS

Drawing No.

**A4.08**

IPD, Inc.

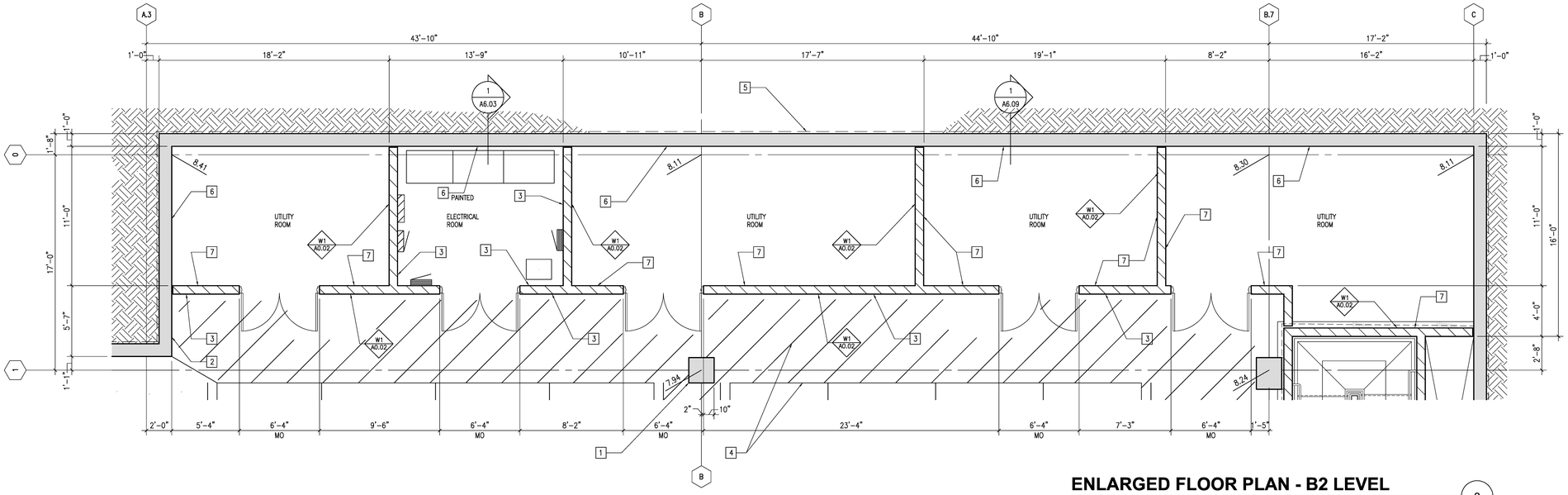


## ENLARGED FLOOR PLAN - B2 LEVEL

SCALE: 1/4" = 1'-0"

2

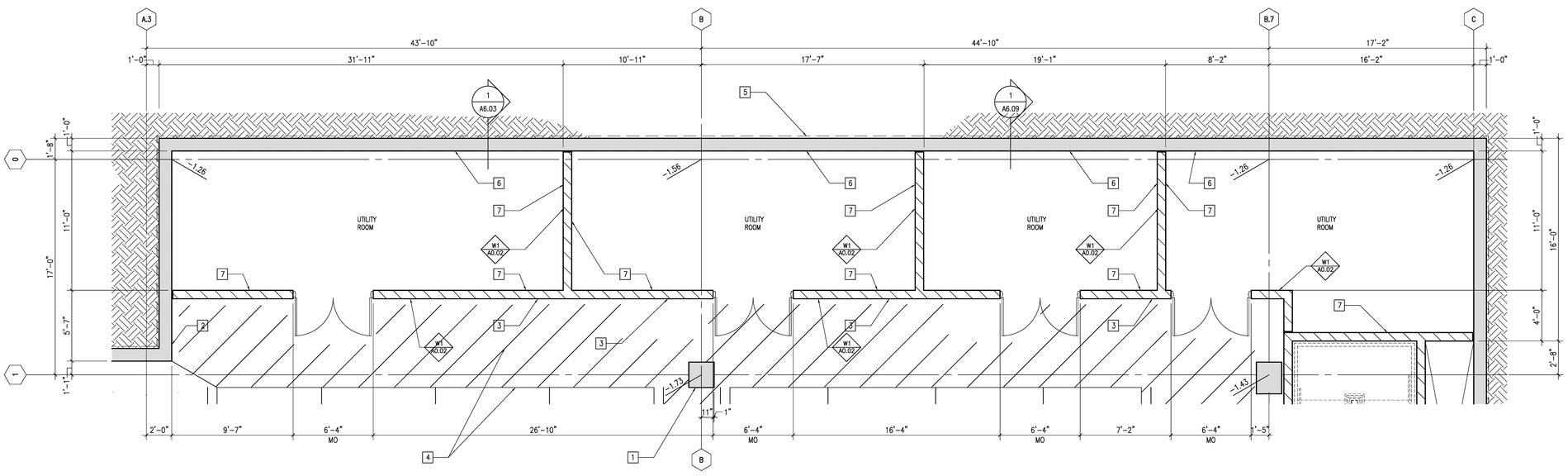


## ENLARGED FLOOR PLAN - B3 LEVEL

SCALE: 1/4" = 1'-0"

1

### KEY NOTES

| | | | |
|---|---|---|---|
| 1 | CONCRETE COLUMN, PAINTED, SEE STRUCT. | 6 | CONCRETE RETAINING WALL, NO PAINT, SEE STRUCT. |
| 2 | CONCRETE RETAINING WALL, PAINTED, SEE STRUCT. | 7 | CMU WALL, NO PAINT |
| 3 | CMU WALL, PAINTED | | |
| 4 | STRIPING, SEE SHEET A9.02 FOR DETAILS | | |
| 5 | WATERPROOFING – SEE WATERPROOFING DRAWINGS | | |

N

**County of San Diego**
**Cedar & Kettner**
**Development Project**
San Diego, California

McCARTHY
20401 S.W. BIRCH STREET SUITE 300
Newport Beach, California 92660

Architect
IPD
Alameda
Irvine
Los Angeles
Architecture / Engineering / Consulting
www.ipd-global.com
2 Faraday, Suite 101, Irvine CA 92618
Phone 949 595 8004 Fax 949 595 8011

| Revision | Date |
|---|---|
| 100% DESIGN DEVELOPMENT | 10/23/13 |
| 90% CDs - 1ST PLAN CHECK | 12/24/13 |
| 2ND PLAN CHECK | 04/23/14 |

| | |
|---|---|
| Date | |
| IPD Job No. | 13-813 |
| Drawn By | MP |
| Checked By | |
| Scale | AS SHOWN |

CONSTRUCTION DOCUMENTS

Drawing Title
ENLARGED FLOOR PLANS

Drawing No.
**A4.09**

IPD, Inc.

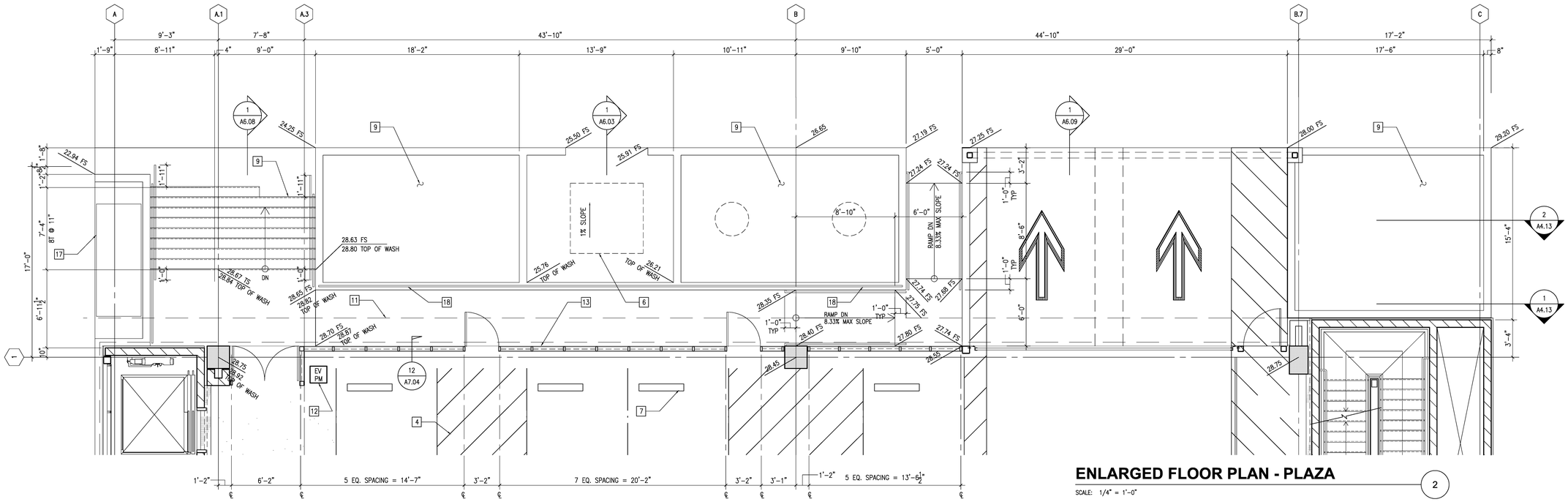


## ENLARGED FLOOR PLAN - PLAZA

SCALE: 1/4" = 1'-0"

2

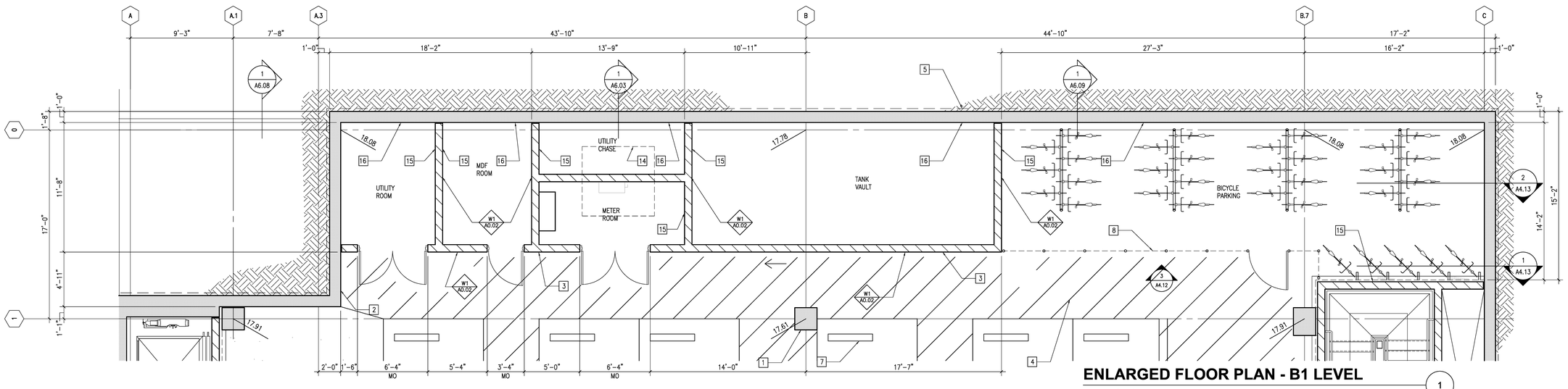


## ENLARGED FLOOR PLAN - B1 LEVEL

SCALE: 1/4" = 1'-0"

1

### KEY NOTES

| | | | | | | | |
|---|---|---|---|---|---|---|---|
| 1 | CONCRETE COLUMN, PAINTED, SEE STRUCT. | 6 | TRANSFORMER PAD (SEE ELECT DWG'S) | 11 | LINE OF EYEBROW PROJECTION ABOVE, SEE ELEVATIONS AND A7.05 | 16 | CONCRETE RETAINING WALL, NO PAINT, SEE STRUCT. |
| 2 | CONCRETE RETAINING WALL, PAINTED, SEE STRUCT. | 7 | PRECAST CONCRETE WHEELSTOP, SEE SHEET A9.02 FOR DETAIL | 12 | POWER PROVISIONS FOR ELECTRICAL VEHICLE CHARGING STATION (PEDESTAL MOUNT (PM) OR WALL MOUNT (WM)) | 17 | MTS EQUIPMENT BEYOND – UNDER SEPARATE PERMIT |
| 3 | CMU WALL, PAINTED | 8 | VINYL–COATING CHAINLINK FENCE (FULL HEIGHT) | 13 | SECURITY SCREENING SET IN ALUMINUM STOREFRONT FRAME | 18 | GUARDRAIL, PAINTED, SEE 12/A7.01 |
| 4 | STRIPING, SEE SHEET A9.02 FOR DETAILS | 9 | PLANTER, SEE LANDSCAPING PLAN | 14 | LINE OF TRANSFORMER PAD ABOVE | | |
| 5 | WATERPROOFING – SEE WATERPROOFING DRAWINGS | 10 | CONCRETE STAIR ON GRADE | 15 | CMU WALL, NO PAINT | | |

N

**County of San Diego**
**Cedar & Kettner**
**Development Project**
San Diego, California

McCARTHY
20401 S.W. BIRCH STREET SUITE 300
Newport Beach, California 92660

Architect
IPD
Alameda
Irvine
Los Angeles
Architecture / Engineering / Consulting
www.ipd-global.com
2 Faraday, Suite 101, Irvine CA 92618
Phone 949 595 8004 Fax 949 595 8011

| Revision | Date |
|---|---|
| 100% DESIGN DEVELOPMENT | 10/23/13 |
| 90% CDs - 1ST PLAN CHECK | 12/24/13 |
| 2ND PLAN CHECK | 04/23/14 |

| | |
|---|---|
| Date | |
| IPD Job No. | 13-813 |
| Drawn By | MP |
| Checked By | |
| Scale | AS SHOWN |

CONSTRUCTION DOCUMENTS

Drawing Title
ENLARGED FLOOR PLANS

Drawing No.
**A4.10**

IPD, Inc.

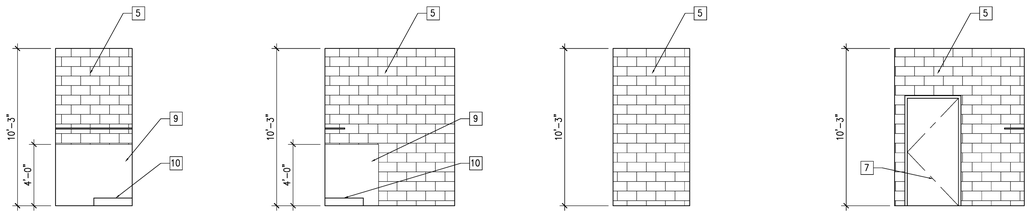


## INTERIOR ELEVATIONS

SCALE: 1/4" = 1'-0"

6

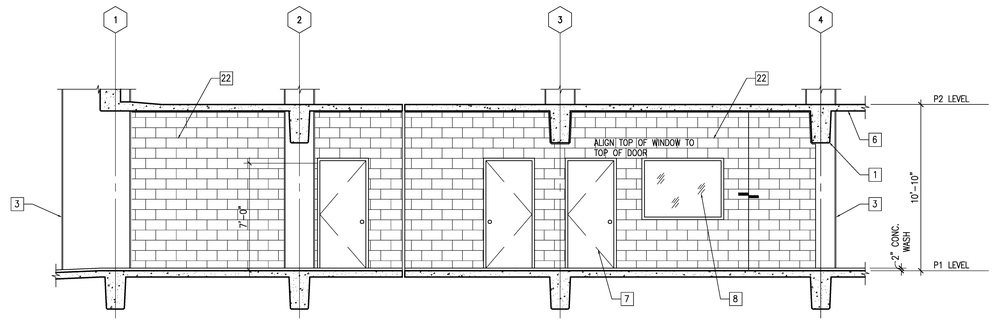


## INTERIOR ELEVATIONS

SCALE: 1/4" = 1'-0"

5

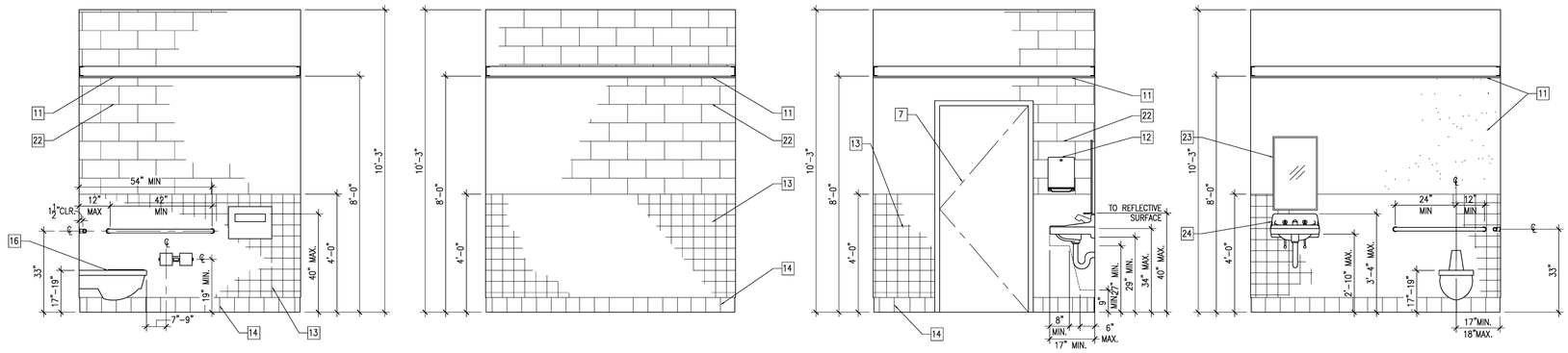


## INTERIOR ELEVATIONS

SCALE: 1/2" = 1'-0"

4

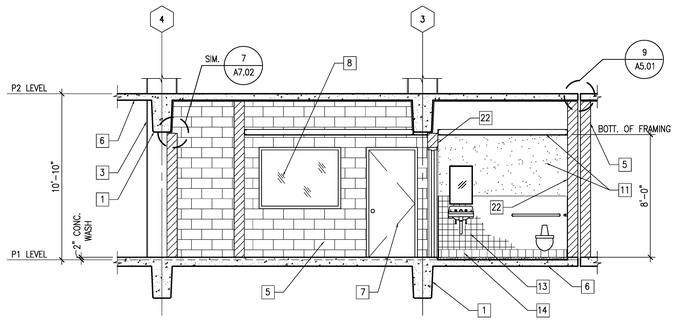


## PARTIAL BUILDING SECTION

SCALE: 1/4" = 1'-0"

3

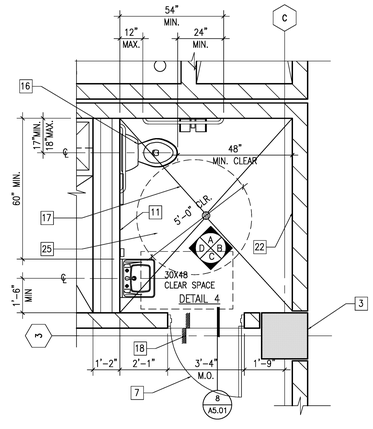


## ENLARGED RESTROOM PLAN

SCALE: 3/8" = 1'-0"

2

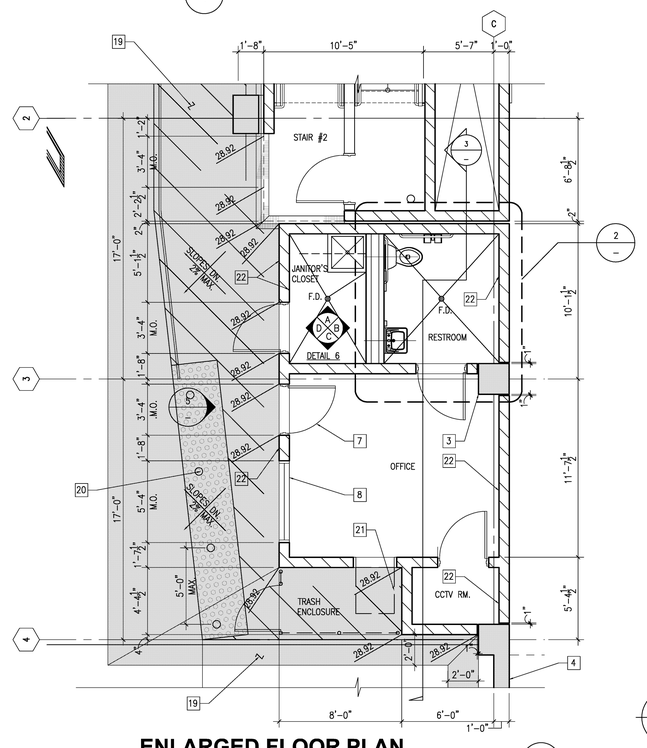


## ENLARGED FLOOR PLAN

SCALE: 1/4" = 1'-0"

1

N

### KEY NOTES

| | | | | | | | | | |
|---|---|---|---|---|---|---|---|---|---|
| 1 | CONCRETE DOWNTURNED BEAM, PAINTED, SEE STRUCT. | 6 | CONCRETE SLAB, PAINTED (SEE STRUCT. DWGS.) | 11 | 1/2" GYP. BD., PAINTED, OVER METAL STUDS @ 16" O.C. | 16 | WALL HUNG TOILET | 21 | WALL AC UNIT, SEE MECH. DRAWINGS |
| 2 | CONCRETE SPANDREL | 7 | DOOR, SEE DOOR SCHEDULE ON SHEET A5.01 | 12 | PAPER TOWEL DISPENER | 17 | SLOPE FLOOR SLAB TO DRAIN | 22 | CMU WALL, PAINTED |
| 3 | CONCRETE COLUMN, SEE STRUCT. | 8 | WINDOW, SEE WINDOW SCHEDULE ON SHEET A5.01 | 13 | CERAMIC TILE | 18 | 2" RECESSED SLAB TO ACCEPT SLOPING CONCRETE TOPPING SLAB FOR TILE FINISH | 23 | MIRROR |
| 4 | CONCRETE RETAINING WALL, SEE STRUCT. | 9 | FIBER REINFORCED PLASTIC (FRP) | 14 | QUARRY TILE BASE | 19 | 2" SLAB TRANSITION (WASH) | 24 | LAVATORY |
| 5 | CMU WALL, NO PAINT | 10 | MOP RECEPTOR (SEE PLUMBING DWG'S) | 15 | TOILET COVER SEAT DISPENSER | 20 | BOLLARD, SEE 11/A7.02 | 25 | SEALED CONCRETE FLOOR |

IPD, Inc.

**County of San Diego**
**Cedar & Kettner**
**Development Project**
San Diego, California

McCARTHY
20401 S.W. BIRCH STREET SUITE 300
Newport Beach, California 92660

Architect
IPD
Alameda
Irvine
Los Angeles
Architecture / Engineering / Consulting
www.ipd-global.com
2 Faraday, Suite 101, Irvine CA 92618
Phone 949 595 8004 Fax 949 595 8011

| Revision | Date |
|---|---|
| 100% DESIGN DEVELOPMENT | 10/23/13 |
| 90% CDs - 1ST PLAN CHECK | 12/24/13 |
| 2ND PLAN CHECK | 04/23/14 |

| | |
|---|---|
| Date | |
| IPD Job No. | 13-813 |
| Drawn By | MP |
| Checked By | |
| Scale | AS SHOWN |

CONSTRUCTION DOCUMENTS

Drawing Title
ENLARGED FLOOR PLANS

Drawing No.
**A4.11**

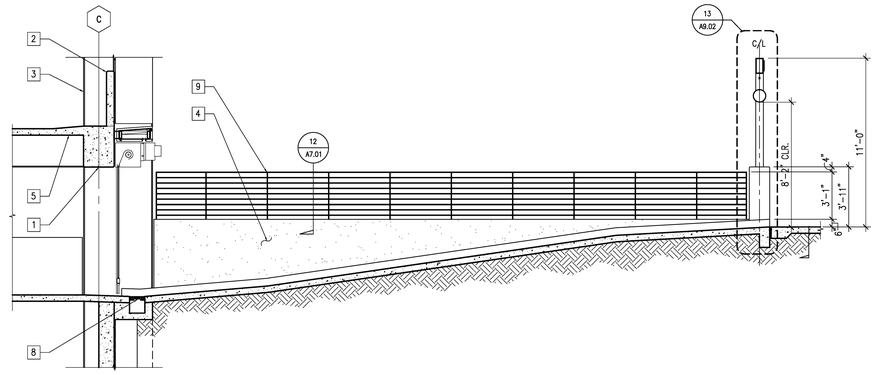


## SECTION THRU ENTRY RAMP

SCALE: 1/4" = 1'-0"

2

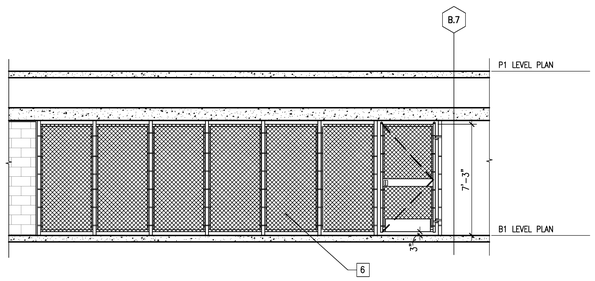


## BICYCLE ENCLOSURE ELEVATION

SCALE: 1/4" = 1'-0"

3

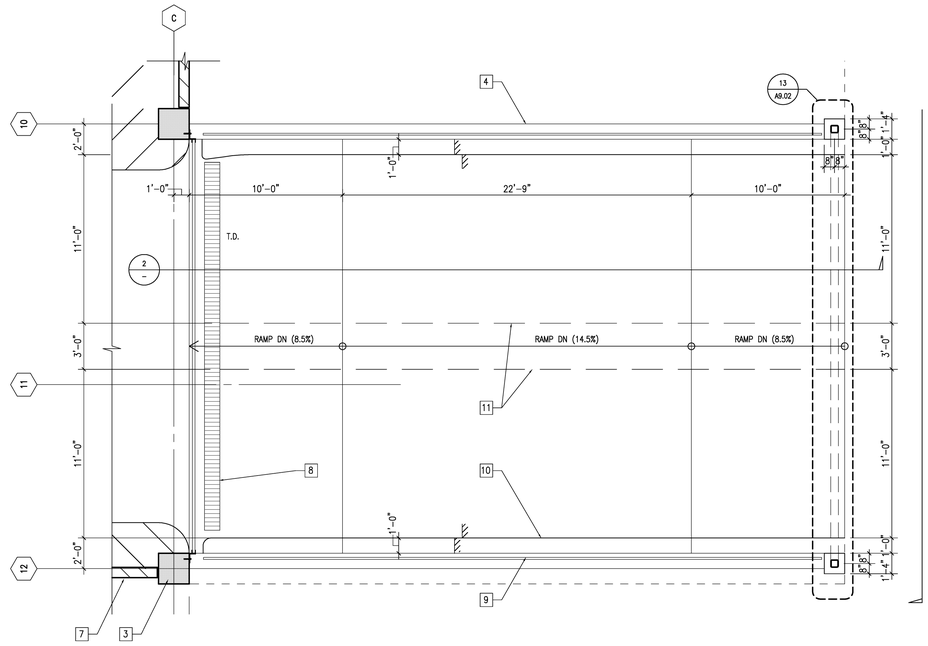


## ENLARGED ENTRANCE RAMP

SCALE: 1/4" = 1'-0"

1

### KEY NOTES

| | | | | | |
|---|---|---|---|---|---|
| 1 | CONCRETE DOWNTURNED BEAM, PAINTED, SEE STRUCT. | 6 | VINYL-COATING CHAINLINK FENCE (FULL HEIGHT) | 11 | YELLOW PAINT LINES |
| 2 | CONCRETE SPANDREL | 7 | CMU WALL, PAINTED | 12 | |
| 3 | CONCRETE COLUMN, SEE STRUCT. | 8 | TRENCH DRAIN, SEE MECH. DRAWINGS | 13 | |
| 4 | CONCRETE RETAINING WALL, PAINTED, SEE STRUCT. | 9 | STEEL GUARDRAIL, SEE SHEET A7.01 | 14 | |
| 5 | CONCRETE SLAB, PAINTED (SEE STRUCT. DWGS.) | 10 | 6"H. CONC. CURB | 15 | |

N

**County of San Diego**
**Cedar & Kettner**
**Development Project**
San Diego, California

McCARTHY

20401 S.W. BIRCH STREET SUITE 300
Newport Beach, California 92660

Architect

IPD

Alameda
Irvine
Los Angeles

Architecture / Engineering / Consulting
www.ipd-global.com

2 Faraday, Suite 101, Irvine CA 92618
Phone 949 595 8004 Fax 949 595 8011

| Revision | Date |
|---|---|
| 100% DESIGN DEVELOPMENT | 10/23/13 |
| 90% CDs - 1ST PLAN CHECK | 12/24/13 |
| 2ND PLAN CHECK | 04/23/14 |

| | |
|---|---|
| Date | |
| IPD Job No. | 13-813 |
| Drawn By | MP |
| Checked By | |
| Scale | AS SHOWN |

CONSTRUCTION DOCUMENTS

Drawing Title

ENLARGED FLOOR PLANS

Drawing No.

**A4.12**

IPD, Inc.

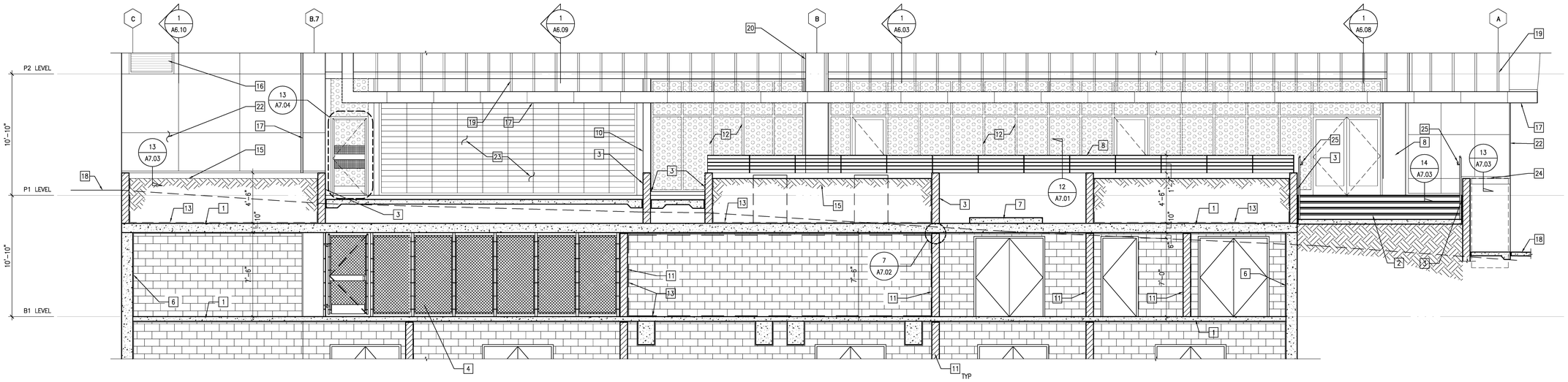


## SECTION / ELEVATION - PLAZA

2

SCALE: 1/4" = 1'-0"

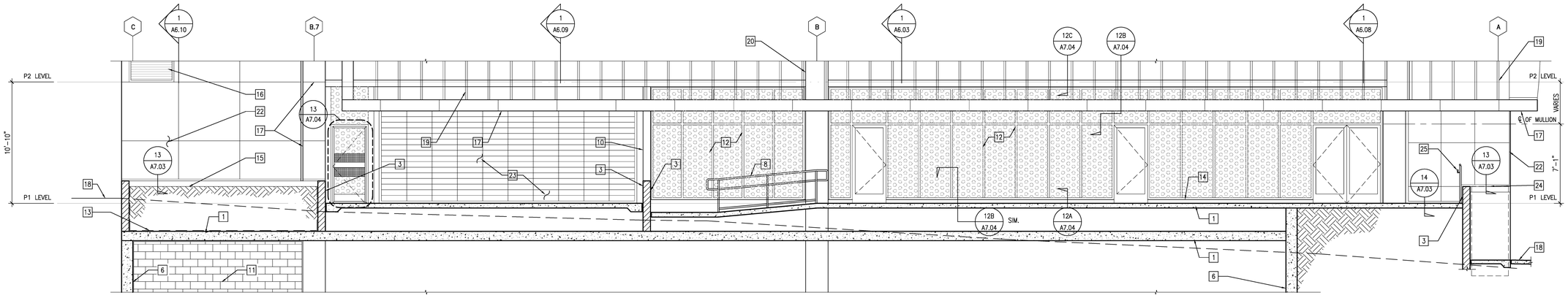


## SECTION / ELEVATION - PLAZA

1

SCALE: 1/4" = 1'-0"

NOTE:
MANUF.: ARCHITECTURAL LOUVERS
MODEL: E6JN
SIZE: 4'-0" x 12'-0" MIN. (48 SF.)

### SECTION / ELEVATION KEY NOTES

| | | | | | | | | | | | |
|---|---|---|---|---|---|---|---|---|---|---|---|
| 1 | CONCRETE SLAB, NO PAINT (SEE STRUCT. DWGS.) | 5 | STORMWATER FILTRATION TANKS | 9 | CONCRETE SUPPORT CURB | 13 | WATERPROOFING, SEE WATERPROOFING DRAWINGS | 17 | ALUMINUM COMPOSITE PANELS OVER METAL STUD FRAMING – DEFERRED APPROVAL | 21 | PLASTER CONTROL JOINT, TYP. |
| 2 | CONCRETE STAIRS ON GRADE | 6 | RETAINING WALL, NO PAINT (SEE STRUCT. DWGS.) | 10 | EXPOSED STEEL SUPPORT, PAINTED | 14 | CONC. CURB | 18 | FINISH SURFACE (SEE CIVIL DWGS.) | 22 | ALUMINUM COMPOSITE PANELS OVER CMU WALL – DEFERRED APPROVAL |
| 3 | GROUND–FACE CMU WALL | 7 | TRANSFORMER PAD | 11 | CMU WALL, NO PAINT | 15 | PLANTER, SEE LANDSCAPING PLAN | 19 | ANODIZED ALUMINUM FINS SET IN SUPPORT FRAME (DEFERRED APPROVAL) | 23 | OVERHEAD COILING GRILLE |
| 4 | VINYL–COATING CHAINLINK FENCE (FULL HEIGHT) AND GATE | 8 | STEEL RAILING, PAINTED | 12 | SECURITY SCREENING SET IN ALUMINUM STOREFRONT FRAME | 16 | EXTRUDED STATIONARY LOUVERS (SEE NOTE) | 20 | CONCRETE COLUMN, SEE STRUCT. DRAWINGS | 24 | MTS EQUIPMENT BEYOND – UNDER SEPARATE PERMIT |
| | | | | | | | | | | 25 | STAINLESS STEEL HANDRAIL |

**County of San Diego**
**Cedar & Kettner**
**Development Project**
San Diego, California

McCARTHY

20401 S.W. BIRCH STREET SUITE 300
Newport Beach, California 92660

Architect

IPD

Alameda
Irvine
Los Angeles

Architecture / Engineering / Consulting
www.ipd-global.com

2 Faraday, Suite 101, Irvine CA 92618
Phone 949 595 8004 Fax 949 595 8011

| Revision | Date |
|---|---|
| 100% DESIGN DEVELOPMENT | 10/23/13 |
| 90% CDs - 1ST PLAN CHECK | 12/24/13 |
| 2ND PLAN CHECK | 04/23/14 |

| | |
|---|---|
| Date | |
| IPD Job No. | 13-813 |
| Drawn By | MP |
| Checked By | |
| Scale | AS SHOWN |

CONSTRUCTION DOCUMENTS

Drawing Title
SECTION / ELEVATIONS

Drawing No.
**A4.13**

IPD, Inc.

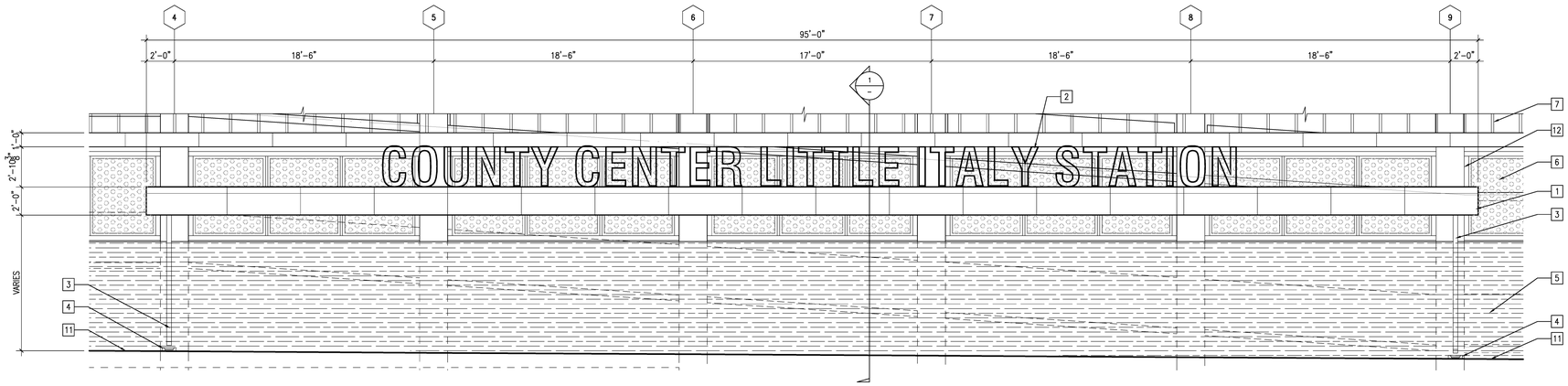


## ELEVATION - CANOPY

SCALE: 1/4" = 1'-0"

3

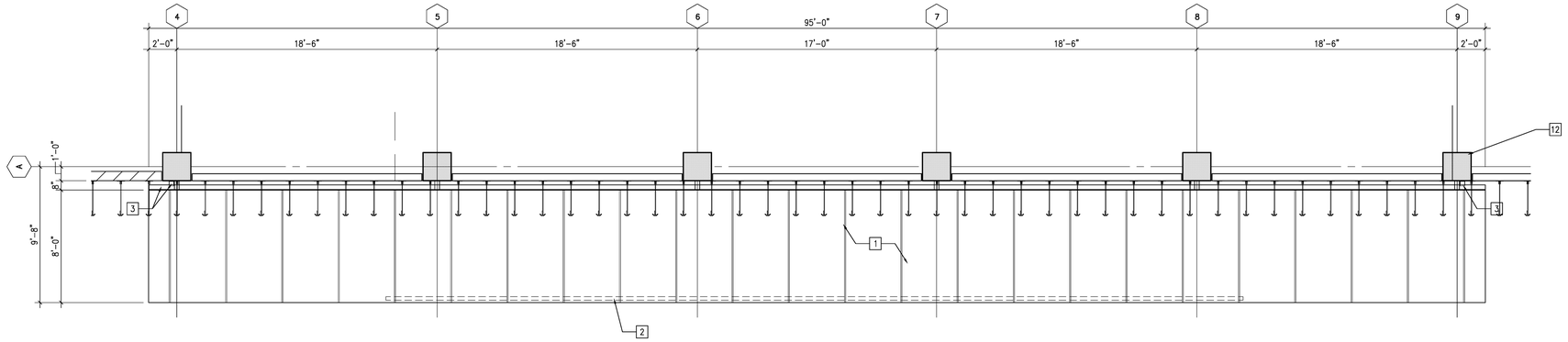


## ROOF PLAN - CANOPY

SCALE: 1/4" = 1'-0"

2

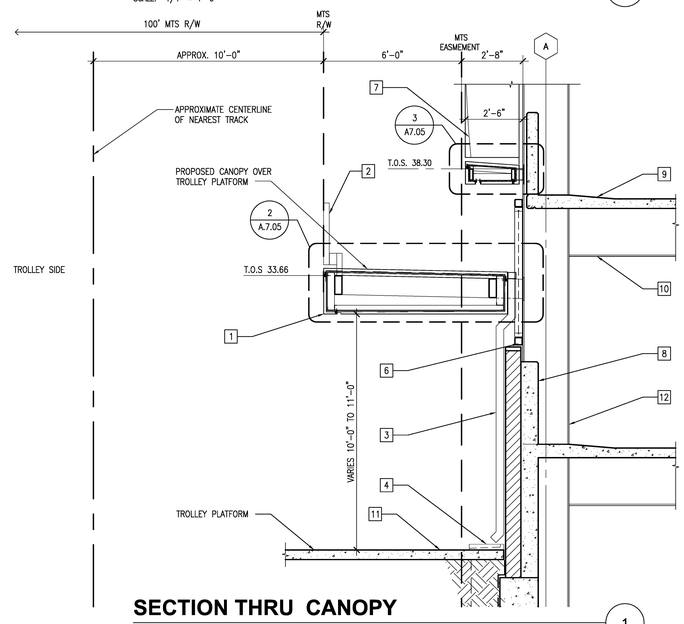


## SECTION THRU CANOPY

SCALE: 3/8" = 1'-0"

1

### SECTION / ELEVATION KEY NOTES

| | | | | | | | | | |
|---|---|---|---|---|---|---|---|---|---|
| 1 | ALUMINUM COMPOSITE PANELS OVER METAL STUD FRAMING | 5 | GROUND-FACE CMU WALL | 9 | CONCRETE SLAB, PAINTED (SEE STRUCT. DWGS.) | 13 | . | 17 | . |
| 2 | ILLUMINATED SIGNAGE (UNDER SEPARATE PERMIT) | 6 | SECURITY SCREENING SET IN ALUMINUM STOREFRONT FRAME | 10 | CONCRETE DOWNTURNED BEAM, PAINTED | 14 | . | 18 | . |
| 3 | G.I. GUTTER & DOWNSPOUT (PAINTED) | 7 | ANODIZED ALUMINUM FINS SET IN SUPPORT FRAME – DEFERRED APPROVAL | 11 | FINISH SURFACE (SEE CIVIL DWGS.) | 15 | . | 19 | . |
| 4 | PRECAST CONCRETE SPLASHBLOCK | 8 | CONCRETE SPANDREL | 12 | CONCRETE COLUMN | 16 | . | 20 | . |

**County of San Diego**
**Cedar & Kettner**
**Development Project**
San Diego, California

McCARTHY

20401 S.W. BIRCH STREET SUITE 300
Newport Beach, California 92660

Architect

IPD

Alameda
Irvine
Los Angeles

Architecture / Engineering / Consulting
www.ipd-global.com

2 Faraday, Suite 101, Irvine CA 92618
Phone 949 595 8004 Fax 949 595 8011

| Revision | Date |
|---|---|
| 100% DESIGN DEVELOPMENT | 10/23/13 |
| 90% CDs - 1ST PLAN CHECK | 12/24/13 |
| 2ND PLAN CHECK | 04/23/14 |

| | |
|---|---|
| Date | |
| IPD Job No. | 13-813 |
| Drawn By | MP |
| Checked By | |
| Scale | AS SHOWN |

CONSTRUCTION DOCUMENTS

Drawing Title

CANOPY PLAN, ELEVATION AND DETAILS

Drawing No.

**A4.14**

IPD, Inc.

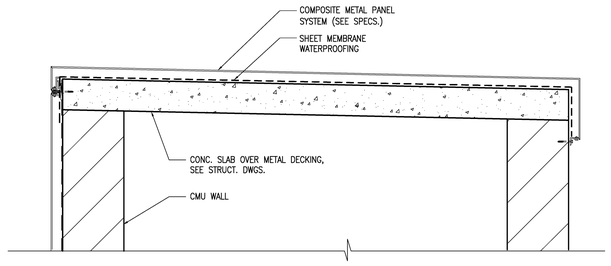


## DETAIL

SCALE: 1 1/2" = 1'-0"

3

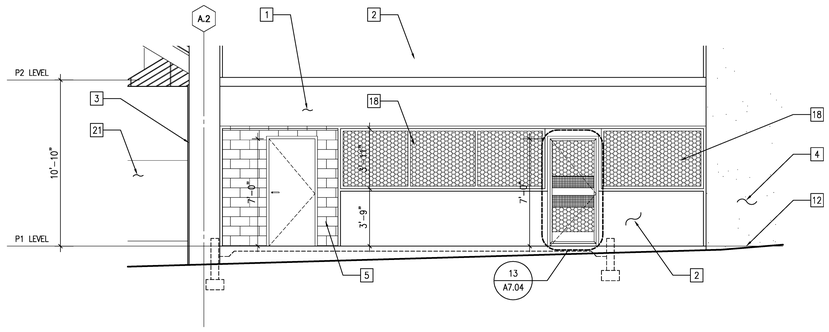


## PARTIAL SOUTH ELEVATION

SCALE: 1/4" = 1'-0"

2

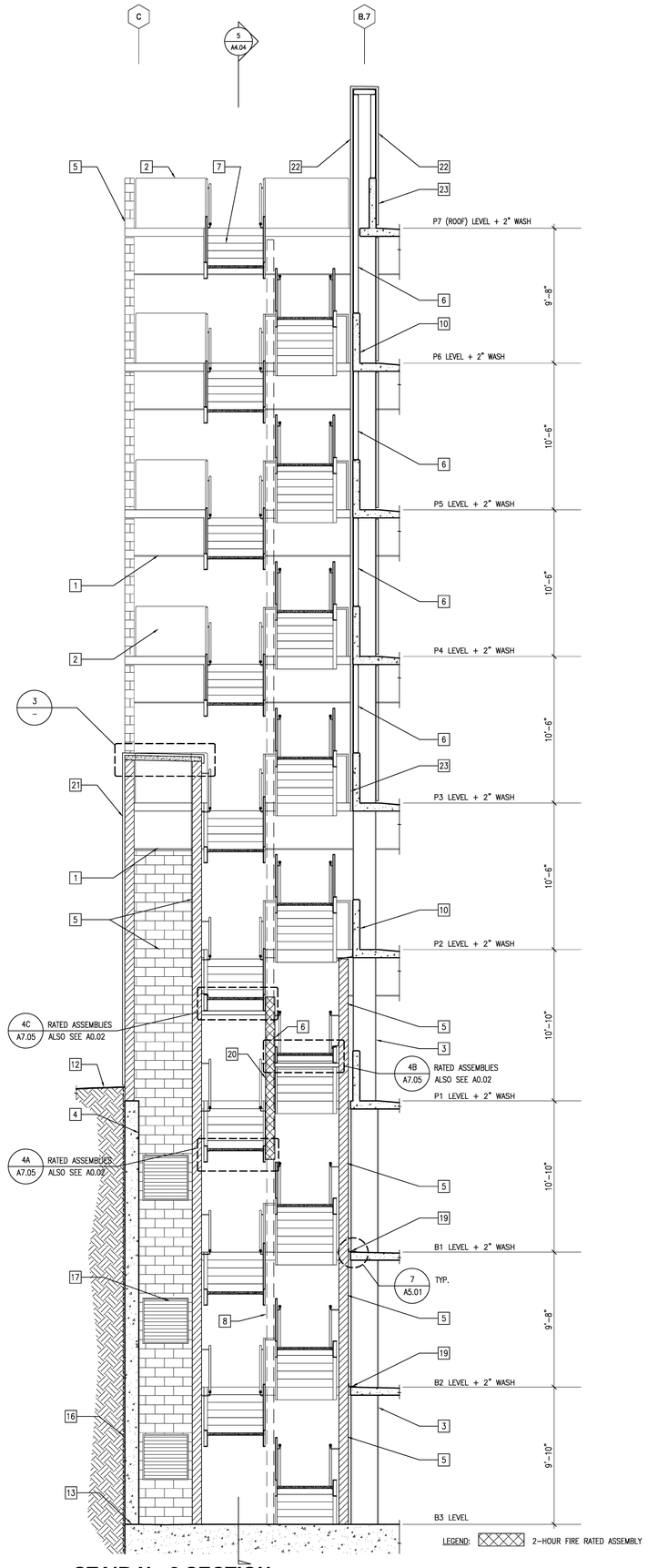


## STAIR No.2 SECTION

SCALE: 1/4" = 1'-0"

1

### KEY NOTES

| | | | | | | | | | |
|---|---|---|---|---|---|---|---|---|---|
| 1 | CONCRETE DOWNTURNED BEAM, SEE STRUCT. | 6 | PORTLAND CEMENT PLASTER OVER EXT. GYP. SHEATHING OVER MTL. STUDS | 11 | PLASTER CONTROL JOINT, TYP. | 16 | BELOW GRADE WATERPROOFING, SEE WATERPROOFING DWGS. | 21 | ALUMINUM COMPOSITE PANELS OVER CMU WALL – DEFERRED APPROVAL |
| 2 | CONCRETE SPANDREL | 7 | STEEL STAIR, PAINTED | 12 | FINISH GRADE, SEE CIVIL DRAWINGS | 17 | SCREENED LOUVERED VENT, SEE MECH. DRAWINGS | 22 | ALUMINUM COMPOSITE PANELS OVER METAL STUD FRAMING – DEFERRED APPROVAL |
| 3 | CONCRETE COLUMN, SEE STRUCT. | 8 | STEEL STAIR POST IN FOREGROUND, PAINTED | 13 | CONTINUOUS BENTONITE WATERSTOP (TYP.) @ ALL COLD JOINTS | 18 | SECURITY SCREENING SET IN ALUMINUM STOREFRONT FRAME | 23 | ALUMINUM COMPOSITE PANELS OVER CONCRETE – DEFERRED APPROVAL |
| 4 | CONCRETE RETAINING WALL, NO PAINT, SEE STRUCT. | 9 | STEEL SHADE CANOPY SUPPORT BEYOND | 14 | G.I. COPING, PAINTED | 19 | ALUMINUM COVER PLATE, SEE SPECS | 24 | |
| 5 | CMU WALL | 10 | CONCRETE SPANDREL BELOW METAL STUDS FRAMING | 15 | G.I. GRATING | 20 | EXT. GYP. SHEATHING OVER MTL. STUDS, PAINTED | 25 | |

IPD, Inc.

**County of San Diego**
**Cedar & Kettner**
**Development Project**
San Diego, California

McCARTHY
20401 S.W. BIRCH STREET SUITE 300
Newport Beach, California 92660

Architect
IPD
Alameda
Irvine
Los Angeles
Architecture / Engineering / Consulting
www.ipd-global.com
2 Faraday, Suite 101, Irvine CA 92618
Phone 949 595 8004 Fax 949 595 8011

| Revision | Date |
|---|---|
| 100% DESIGN DEVELOPMENT | 10/23/13 |
| 90% CDs - 1ST PLAN CHECK | 12/24/13 |
| 2ND PLAN CHECK | 04/23/14 |

| | |
|---|---|
| Date | |
| IPD Job No. | 13-813 |
| Drawn By | MP |
| Checked By | |
| Scale | AS SHOWN |

CONSTRUCTION DOCUMENTS

Drawing Title
STAIR #2
ENLARGED SECTION

Drawing No.
**A4.15**

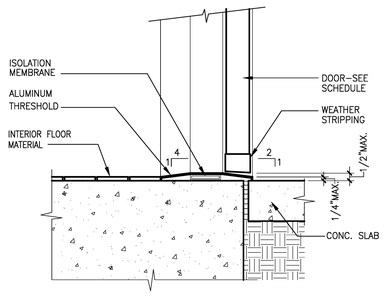


NOTE: AT DOORS 26 & 27 (SEE DOOR SCHEDULE)

## DOOR THRESHOLD (11)

SCALE: 1"=1'-0"

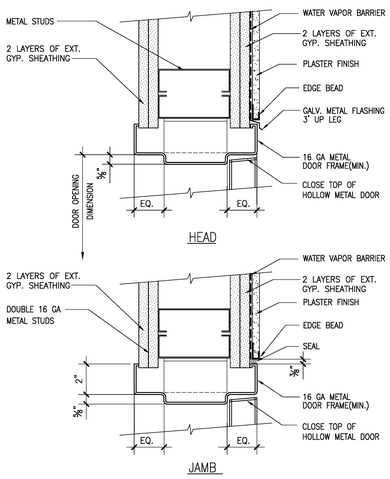


## JAMB AND HEAD @ METAL STUD WALL (10)

SCALE: 3" = 1'-0"

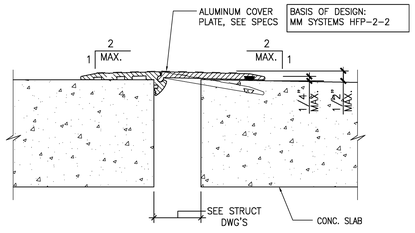


NOTE:
THE COVER PLATE'S HORIZONTAL SURFACE MUST HAVE A STATIC COEFFICIENT OF FRICTION (SCOF) OF 0.68 OR GREATER AS MEASURED BY OSHA AND ASTM TESTING METHODS.

## ALUMINUM COVER PLATE DETAIL (9)

SCALE: 3" = 1'-0"

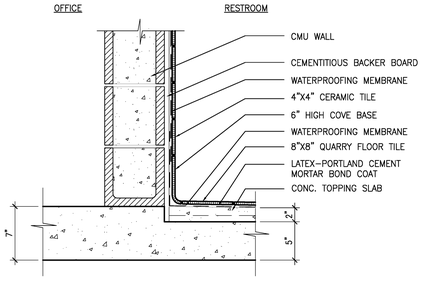


## ENLARGED DETAIL (8)

SCALE: 1 1/2" = 1'-0"

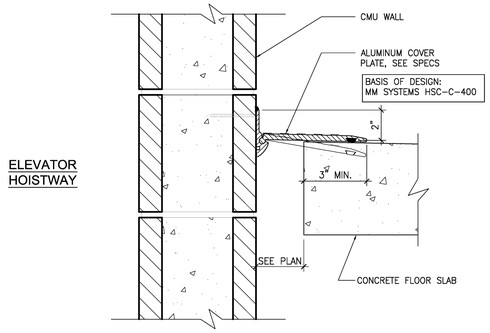


NOTE:
THE COVER PLATE'S HORIZONTAL SURFACE MUST HAVE A STATIC COEFFICIENT OF FRICTION (SCOF) OF 0.68 OR GREATER AS MEASURED BY OSHA AND ASTM TESTING METHODS.

## ALUMINUM COVER PLATE DETAIL (7)

SCALE: 3" = 1'-0"

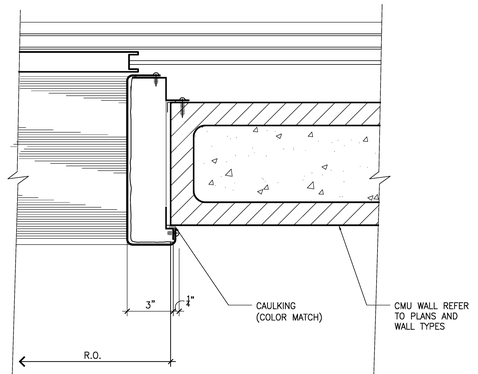


## ELEVATOR DOOR FRAME (6)

SCALE: 3" = 1'-0" (JAMB DETAIL)

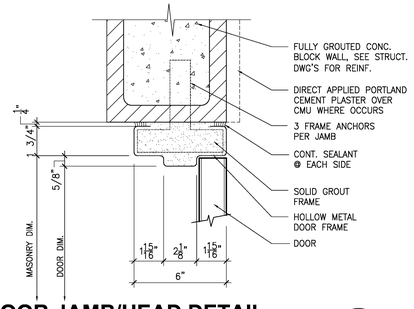


## DOOR JAMB/HEAD DETAIL (5)

SCALE: 3" = 1'-0"

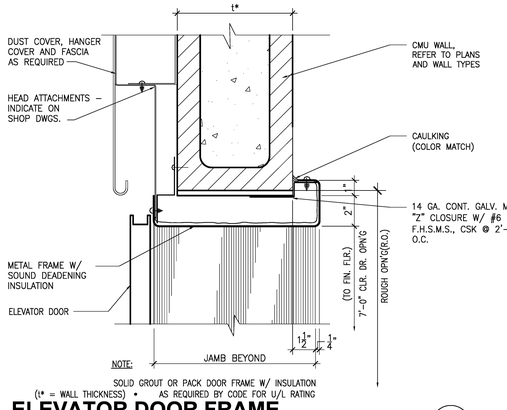


## ELEVATOR DOOR FRAME (4)

SCALE: 3" = 1'-0" (HEAD DETAIL)

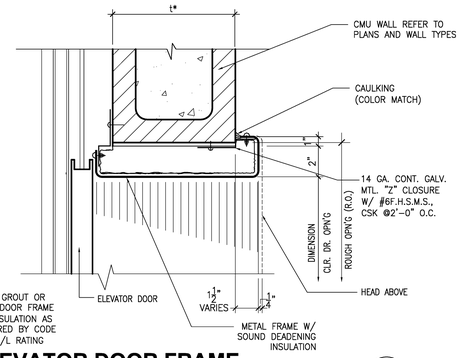


## ELEVATOR DOOR FRAME (3)

SCALE: 3" = 1'-0" (JAMB DETAIL)

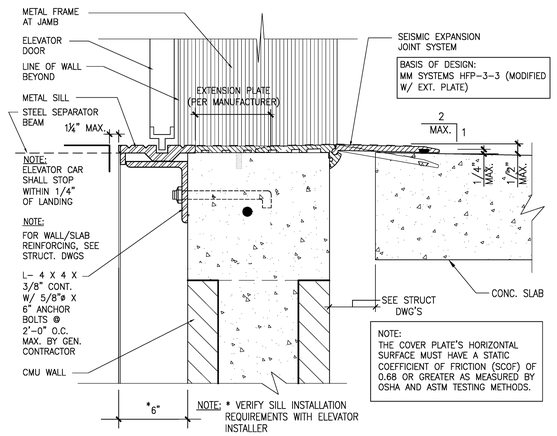


## ELEVATOR DOOR FRAME EXP. JOINT AT SILL (2)

SCALE: 3" = 1'-0"

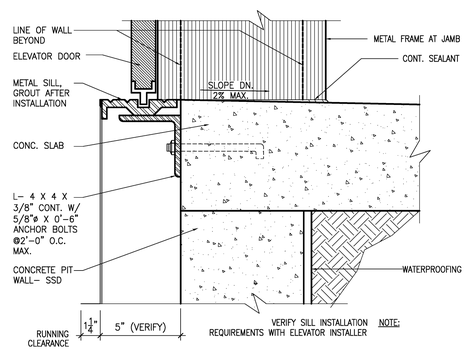


## ELEVATOR DOOR FRAME (1)

SCALE: 3" = 1'-0" (SILL DETAIL AT GROUND LEVEL)

## WINDOW SCHEDULE

| DESIGNATION | TYPE | LOCATION | SIZE (W) | SIZE (H) | WINDOW FRAME MAT. | FRAME FIN. | DETAILS JAMB | HEAD | MUL. | SILL | REMARKS |
|---|---|---|---|---|---|---|---|---|---|---|---|
| A | A | OFFICE | 5'–4" | 4'–0" | AL | FF | . | . | . | . | SAFETY GLAZING |
| B | . | . | . | . | . | . | . | . | . | . | |
| C | . | . | . | . | . | . | . | . | . | . | |

WINDOW TYPES

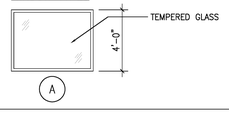


## DOOR SCHEDULE

| DESIGNATION | NO. OF DOORS | DOOR TYPE | DOOR MAT'L. | DOOR THK. | DOOR FRAME OPEN'G. DIM. WIDTH | OPEN'G. DIM. HEIGHT | MAT'L. FRAME | MAT'L. TRIM | DETAILS JAMB | DETAILS HEAD | HARDWARE GROUP | HARDWARE PANIC HDW. | HARDWARE CLOSER | FIRE RATING (IN HOURS) | REMARKS |
|---|---|---|---|---|---|---|---|---|---|---|---|---|---|---|---|
| 1 | 1 | 2 | HM | 1¾" | 6'–0" | 7'–0" | STL | HM | 5/– | 5/– | – | – | HDC | 1 | B3 UTILITY ROOM |
| 2 | 1 | 2 | HM | 1¾" | 6'–0" | 7'–0" | STL | HM | 5/– | 5/– | – | – | HDC | 1 | B3 UTILITY ROOM |
| 3 | 1 | 2 | HM | 1¾" | 6'–0" | 7'–0" | STL | HM | 5/– | 5/– | – | – | HDC | 1 | B3 UTILITY ROOM |
| 4 | 1 | 2 | HM | 1¾" | 6'–0" | 7'–0" | STL | HM | 5/– | 5/– | – | – | HDC | 1 | B3 UTILITY ROOM |
| 5 | 1 | 2 | HM | 1¾" | 3'–0" | 7'–0" | STL | HM | 5/– | 5/– | – | YES | HDC | 1.5 | B3 EXIT STAIR 2 |
| 6 | 1 | 2 | HM | 1¾" | 3'–0" | 7'–0" | STL | HM | 5/– | 5/– | – | YES | HDC | 1.5 | B3 EXIT STAIR 1 |
| 7 | 1 | 2 | HM | 1¾" | 6'–0" | 7'–0" | STL | HM | 5/– | 5/– | – | – | HDC | 1 | B2 UTILITY ROOM |
| 8 | 1 | 2 | HM | 1¾" | 6'–0" | 7'–0" | STL | HM | 5/– | 5/– | – | – | HDC | 1 | B2 ELECTRICAL ROOM |
| 9 | 1 | 2 | HM | 1¾" | 6'–0" | 7'–0" | STL | HM | 5/– | 5/– | – | – | HDC | 1 | B2 UTILITY ROOM |
| 10 | 1 | 2 | HM | 1¾" | 6'–0" | 7'–0" | STL | HM | 5/– | 5/– | – | – | HDC | 1 | B2 UTILITY ROOM |
| 11 | 1 | 2 | HM | 1¾" | 6'–0" | 7'–0" | STL | HM | 5/– | 5/– | – | – | HDC | 1 | B2 UTILITY ROOM |
| 12 | 1 | 2 | HM | 1¾" | 3'–0" | 7'–0" | STL | HM | 5/– | 5/– | – | YES | HDC | 1.5 | B2 EXIT STAIR 2 |
| 13 | 1 | 2 | HM | 1¾" | 3'–0" | 7'–0" | STL | HM | 5/– | 5/– | – | YES | HDC | 1.5 | B2 EXIT STAIR 1 |
| 14 | 1 | 2 | HM | 1¾" | 6'–0" | 7'–0" | STL | HM | 5/– | 5/– | – | – | HDC | 1 | B1 UTILITY ROOM |
| 15 | 1 | 2 | HM | 1¾" | 3'–0" | 7'–0" | STL | HM | 5/– | 5/– | – | – | HDC | 1 | B1 MDF ROOM |
| 16 | 1 | 2 | HM | 1¾" | 6'–0" | 7'–0" | STL | HM | 5/– | 5/– | – | – | HDC | 1 | B1 METER ROOM |
| 17 | 1 | 2 | HM | 1¾" | 3'–0" | 7'–0" | STL | HM | 5/– | 5/– | – | – | HDC | – | P1 CONTROL CLOSET |
| 18 | 1 | 5 | CL | – | 3'–6" | 7'–0" | GP | GP | – | – | – | – | HD | – | B1 BICYCLE PARKING |
| 19 | 1 | 2 | HM | 1¾" | 3'–0" | 7'–0" | STL | HM | 5/– | 5/– | – | YES | HDC | 1.5 | B1 EXIT STAIR 2 |
| 20 | 1 | 2 | HM | 1¾" | 3'–0" | 7'–0" | STL | HM | 5/– | 5/– | – | YES | HDC | 1.5 | B1 EXIT STAIR 1 |
| 21 | 1 | 4 | – | – | 6'–0" | 7'–0" | – | – | –/– | –/– | – | YES | HDC | – | P1 NORTH PLAZA EXIT |
| 22 | 1 | 3 | – | – | 3'–0" | 7'–0" | – | – | –/– | –/– | – | YES | HDC | – | P1 NORTH PLAZA EXIT |
| 23 | 1 | 3 | – | – | 3'–0" | 7'–0" | – | – | –/– | –/– | – | YES | HDC | – | P1 NORTH PLAZA EXIT |
| 24 | 1 | 2 | HM | 1¾" | 3'–0" | 7'–0" | STL | HM | 10/– | 10/– | – | YES | HDC | 2 | P1 EXIT STAIR 2 |
| 25 | 1 | 2 | HM | 1¾" | 3'–0" | 7'–0" | STL | HM | 5/– | 5/– | – | – | HDC | 1 | P1 STORAGE CLOSET |
| 26 | 1 | 2 | HM | 1¾" | 3'–0" | 7'–0" | STL | HM | 5/– | 5/– | – | – | – | – | P1 RESTROOM |
| 27 | 1 | 2 | HM | 1¾" | 3'–0" | 7'–0" | STL | HM | 5/– | 5/– | – | – | HDC | 1 | P1 OFFICE |
| 28 | 1 | 2 | HM | 1¾" | 3'–0" | 7'–0" | STL | HM | 5/– | 5/– | – | YES | HDC | – | P1 EXIT STAIR 1 |
| 29 | 1 | 3 | – | – | 3'–0" | 7'–0" | – | – | –/– | –/– | – | YES | HDC | – | P1 NORTH PLAZA EXIT |
| 30 | 1 | 6 | STL | – | –/(R.O.) | –/(R.O.) | STL | – | – | – | – | – | – | – | VEHICULAR COILING GRILLE |
| 31 | 1 | 6 | STL | – | –/(R.O.) | –/(R.O.) | STL | – | – | – | – | – | – | – | VEHICULAR COILING GRILLE |
| 32 | 1 | TBD | TBD | TBD | TBD | TBD | TBD | TBD | TBD | TBD | TBD | TBD | TBD | TBD | XFMR |
| 33 | 1 | 7 | HM | 1¾" | 8'–0" | 7'–0" | STL | HM | 5/– | 5/– | – | – | HDC | 1 | ELEVATOR CONTROL ROOM |
| 34 | 1 | 3 | – | – | 3'–0" | 7'–0" | – | – | –/– | –/– | – | YES | HDC | – | P1 NORTH PLAZA EXIT |

### LEGEND

HM – HOLLOW METAL
STL– STEEL
HD – HEAD MOUNTED CLOSER
NR – NON–RATED

GP – GALVANIZED PIPE
CL – CHAINLINK
HDC – HEAVY DUTY CLOSER
FV – FIELD VERIFY

NOTES:
1. FOR DOOR HARDWARE SCHEDULE, SEE SPECIFICATIONS.
2. FOR ADDITIONAL DOOR AND HARDWARE NOTES: SHEET SPECS
3. SEE MECHANICAL DRAWINGS FOR MORE INFORMATION

### DOOR TYPES:

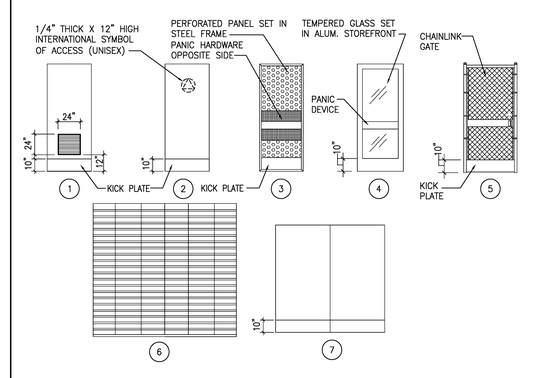


### DOOR NOTES

1. DOOR HARDWARE: HAND–ACTIVATED DOOR OPENING HARDWARE SHALL BE CENTERED BETWEEN 30 INCHES AND 44 INCHES ABOVE THE FLOOR. LATCHING AND LOCKING DOORS THAT ARE HAND ACTIVATED AND WHICH ARE IN A PATH OF TRAVEL SHALL BE OPERABLE WITH A SINGLE EFFORT BY LEVER–TYPE HARDWARE, BY PANIC BARS, PUSH–PULL ACTIVATING BARS, OR OTHER HARDWARE DESIGNED TO PROVIDE PASSAGE WITHOUT REQUIRING THE ABILITY TO GRASP THE OPENING HARDWARE. LOCKED EXIT DOORS SHALL OPERATE AS ABOVE IN EGRESS DIRECTION. CBC 1133B.2.5.2.
   A. SEE ALSO 2010 CBC 1008.1.9
2. MAXIMUM EFFORT TO OPERATE DOORS: MAXIMUM EFFORT TO OPERATE DOORS SHALL NOT EXCEED 5 POUNDS FOR EXTERIOR DOORS AND INTERIOR DOORS, SUCH PULL OR PUSH EFFORT BEING APPLIED AT RIGHT ANGLES TO HINGED DOORS AND AT THE CENTER PLANE OF SLIDING OR FOLDING DOORS. COMPENSATING DEVICES OR AUTOMATIC DOOR OPERATOR MAY BE UTILIZED TO MEET THE ABOVE STANDARDS. WHEN FIRE DOORS ARE REQUIRED, THE MAXIMUM EFFORT TO OPERATE THE DOOR MAY BE INCREASED TO THE MINIMUM ALLOWABLE BY THE APPROPRIATE ADMINISTRATIVE AUTHORITY, NOT TO EXCEED 15 POUNDS. CBC 1133B.2.5.
3. THE MINIMUM LATCH SIDE CLEARANCE ON THE PULL SIDE OF THE DOOR SHALL BE PROVIDED AT THE LANDING OF 18 INCHES AT INTERIOR DOORS AND 24 INCHES AT EXTERIOR DOORS. THE MINIMUM PUSH SIDE CLEARANCE OF 12 INCHES SHALL BE PROVIDED AT THE LANDING IF DOOR IS EQUIPPED WITH BOTH A LATCH AND A CLOSER.
4. LANDINGS SHALL BE PROVIDED AT ALL EXIT DOORS. LANDINGS SHALL HAVE A WIDTH OF NOT LESS THAN THE WIDTH OF THE DOOR OR THE WIDTH OF THE STAIRWAY SERVED WHICHEVER IS GREATER. LANDINGS SHALL HAVE A LENGTH MEASURE IN THE DIRECTION OF TRAVEL OF NOT LESS THAN 44 INCHES. (CBC 1008.1.6)
5. DOORS SHALL BE PROVIDED WITH FLOOR OR LANDING ON EACH SIDE OF THE DOOR. FLOOR OR LANDING SHALL NOT BE MORE THAN ½ INCH LOWER THAN THE THRESHOLD. (CBC 1008.1.7)
   MAXIMUM 50% BEVELED SLOPE FOR CHANGES BETWEEN 1/4" AND 1/2"
6. DOORS SHALL BE READILY OPENABLE FROM THE EGRESS SIDE WITHOUT THE USE OF A KEY OR ANY SPECIAL KNOWLEDGE OR EFFORT. (CBC 1008.1.9)
7. DOORS AND GATES WITH CLOSERS OR SPRING HINGES:
   A. CLOSERS WITH MINIMUM 5 SECONDS FROM 90–DEGREE OPEN POSITION TO 12–DEGREE OPEN POSITION
   B. SPRING HINGES WITH MINIMUM 1.5 SECONDS FROM 70–DEGREE OPEN POSITION TO CLOSED POSITION

**County of San Diego**
**Cedar & Kettner**
**Development Project**
San Diego, California

McCARTHY
20401 S.W. BIRCH STREET SUITE 300
Newport Beach, California 92660

Architect
IPD
Alameda
Irvine
Los Angeles
Architecture / Engineering / Consulting
www.ipd-global.com
2 Faraday, Suite 101, Irvine CA 92618
Phone 949 595 8004 Fax 949 595 8011

| Revision | Date |
|---|---|
| 100% DESIGN DEVELOPMENT | 10/23/13 |
| 90% CDs - 1ST PLAN CHECK | 12/24/13 |
| 2ND PLAN CHECK | 04/23/14 |

| | |
|---|---|
| Date | |
| IPD Job No. | 13-813 |
| Drawn By | MS |
| Checked By | |
| Scale | AS SHOWN |

CONSTRUCTION DOCUMENTS

Drawing Title
DOOR SCHEDULE AND DETAILS

Drawing No.
**A5.01**

IPD, Inc.

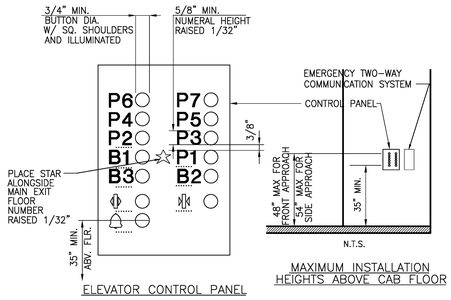


ELEVATOR CONTROL PANEL

MAXIMUM INSTALLATION HEIGHTS ABOVE CAB FLOOR

NOTES:
- IDENTIFICATION FOR THE VISUALLY IMPAIRED SHALL COMPLY WITH CAL ACS, TITLE 24, SEC. 1116B.1.9. A BRAILLE SYMBOL SHALL BE LOCATED IMMEDIATELY BELOW THE NUMERAL, CHARACTER OR SYMBOL.
- THIS DIAGRAM ILLUSTRATES THE SPECIFIC REQUIREMENTS OF ABOVE MENTIONED REGULATIONS AND IS INTENDED ONLY AS AN AID FOR BUILDING DESIGN AND CONSTRUCTION. REFER TO SPECIFICATIONS FOR ADDITIONAL SPECIFIC REQUIREMENTS.

## ELEVATOR CONTROL PANEL (7)

SCALE: 3" = 1'-0" (SILL DETAIL)

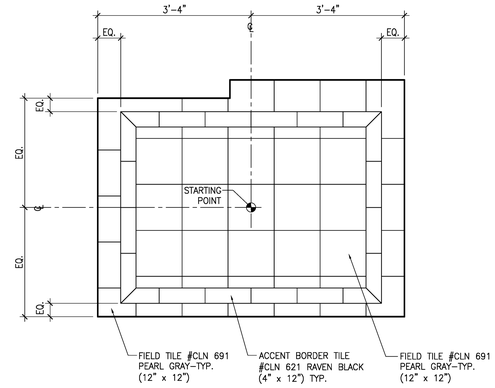


NOTE:
1. ELEVATOR CAR PLATFORM SURFACE NOT EXCEEDING 1/4" IN VERTICAL CHANGES IN ELEVATION.

## ELEV. CAB FLOOR TILE LAYOUT (4)

SCALE: 3/4" = 1'-0"

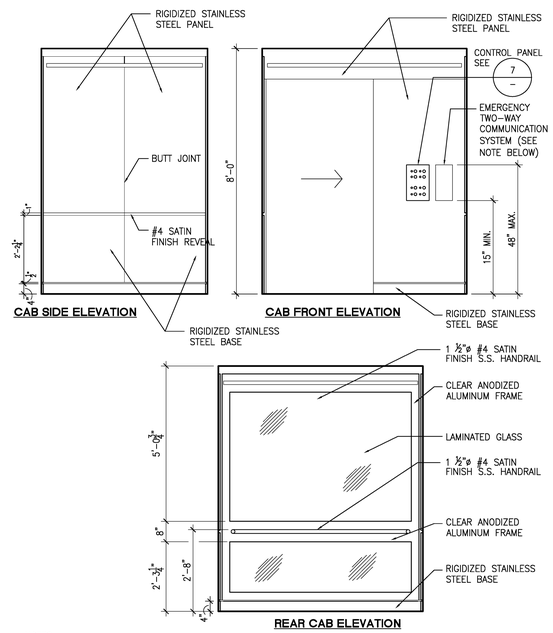


NOTES:
1. EMERGENCY TWO-WAY COMMUNICATION SYSTEM:
   - A. POSITIONED MINIMUM 15 INCHES AND MAXIMUM 48 INCHES ABOVE PLATFORM SURFACE
   - B. DESIGNATED BY RAISED SYMBOLS OR CHARACTERS ADJACENT TO DEVICE, WHITE ON BLACK BACKGROUND.
   - C. CORRESPONDING BRAILLE ADJACENT TO DEVICE
   - D. TWO-WAY COMMUNICATION SYSTEM SHALL HAVE TIMED AUTOMATIC TELEPHONE DIAL-OUT CAPACITY TO AN APPROVE MONITORING LOCATION.
   - E. COMMUNICATION SYSTEM SHALL INCLUDE BOTH AUDIBLE AND VISIBLE SIGNALS.
2. POSTING THE FOLLOWING INFORMATION ADJACENT TO TWO-WAY COMMUNICATION SYSTEM:
   - A. DIRECTION FOR USE OF SYSTEM
   - B. INSTRUCTIONS FOR SUMMONING ASSISTANCE VIA SYSTEM
   - C. WRITTEN IDENTIFICATION OF LOCATION
3. ALL ELEVATOR SIGNAGE SHALL COMPLY WITH THE SIGNAGE REQUIREMENTS ON A9.01

## ELEVATOR CAB INTERIOR ELEVATION (5)

SCALE: 1/2"=1'-0"

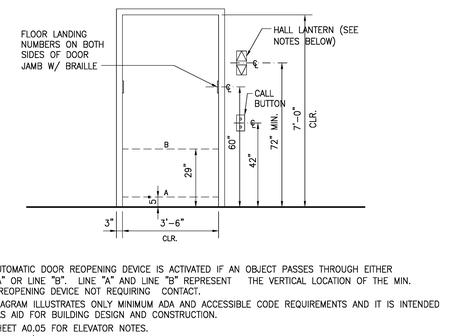


NOTES:
1. THE AUTOMATIC DOOR REOPENING DEVICE IS ACTIVATED IF AN OBJECT PASSES THROUGH EITHER LINE "A" OR LINE "B". LINE "A" AND LINE "B" REPRESENT THE VERTICAL LOCATION OF THE MIN. DOOR REOPENING DEVICE NOT REQUIRING CONTACT.
2. THIS DIAGRAM ILLUSTRATES ONLY MINIMUM ADA AND ACCESSIBLE CODE REQUIREMENTS AND IT IS INTENDED ONLY AS AID FOR BUILDING DESIGN AND CONSTRUCTION.
3. SEE SHEET A0.05 FOR ELEVATOR NOTES.
4. SEE DETAIL 3/A5.02 FOR ISOMETRIC VIEW

## ELEVATOR DOOR ELEVATION (6)

SCALE: N.T.S.

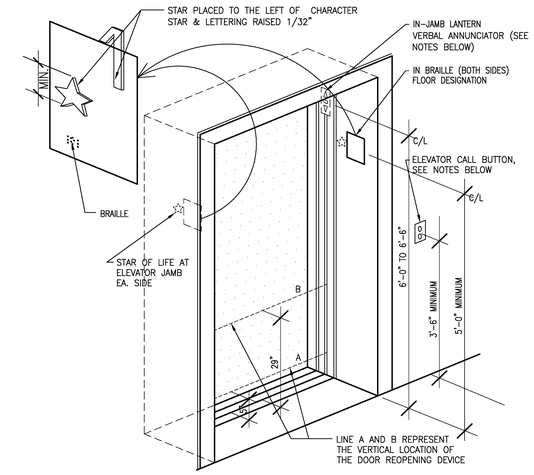


NOTES:
1. VERBAL ANNUNCIATOR:
   - A. VERBAL ANNUNCIATOR SHALL BE 10dB MINIMUM ABOVE AMBIENT, MAXIMUM 80dB, MEASURED AT THE ANNUNCIATOR.
   - B. VERBAL ANNUNCIATOR FREQUENCY MINIMUM 300 Hz AND MAXIMUM 3000 Hz.
2. ELEVATOR CALL BUTTONS:
   - A. ACTIVATED BY A DETECTABLE MECHANICAL MOTION
   - B. BUTTON DESIGNATING UP DIRECTION LOCATED ABOVE BUTTON DESIGNATING DOWN DIRECTION
   - C. INTERNALLY ILLUMINATED WITH WHITE LIGHT OVER ENTIRE BUTTON SURFACE

## ELEVATOR DOOR ISOMETRIC (3)

SCALE: N.T.S.

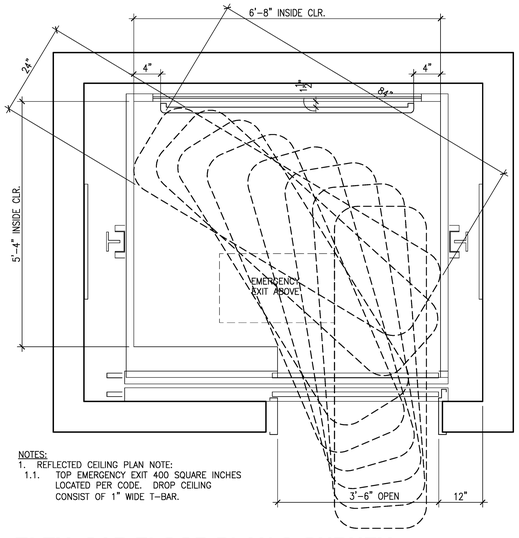


NOTES:
1. REFLECTED CEILING PLAN NOTE:
   - 1.1. TOP EMERGENCY EXIT 400 SQUARE INCHES LOCATED PER CODE. DROP CEILING CONSIST OF 1" WIDE T-BAR.

## ELEV. CAB FLOOR PLAN & GURNEY (2)

SCALE: 3/4" = 1'-0"

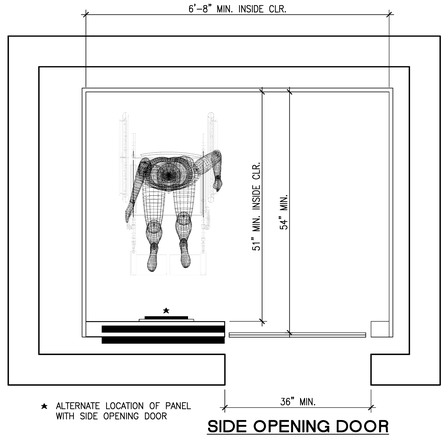


★ ALTERNATE LOCATION OF PANEL WITH SIDE OPENING DOOR

SIDE OPENING DOOR

## MINIMUM DIMENSIONS OF ELEVATOR CAB (1)

3/4" = 1'-0"

**County of San Diego**
**Cedar & Kettner**
**Development Project**
San Diego, California

McCARTHY

20401 S.W. BIRCH STREET SUITE 300
Newport Beach, California 92660

Architect

IPD

Alameda
Irvine
Los Angeles

Architecture / Engineering / Consulting
www.ipd-global.com

2 Faraday, Suite 101, Irvine CA 92618
Phone 949 595 8004 Fax 949 595 8011

| Revision | Date |
|---|---|
| 100% DESIGN DEVELOPMENT | 10/23/13 |
| 90% CDs - 1ST PLAN CHECK | 12/24/13 |
| 2ND PLAN CHECK | 04/23/14 |

| | |
|---|---|
| Date | |
| IPD Job No. | 13-813 |
| Drawn By | MS |
| Checked By | |
| Scale | AS SHOWN |

CONSTRUCTION DOCUMENTS

Drawing Title

ELEVATOR NOTES AND DETAILS

Drawing No.

**A5.02**

IPD, Inc.

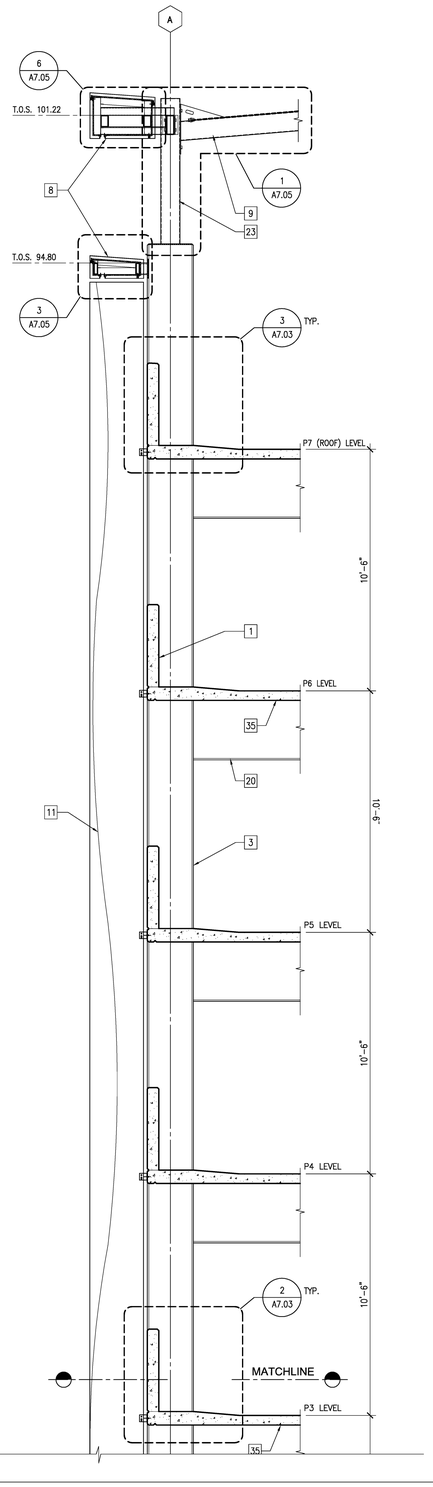


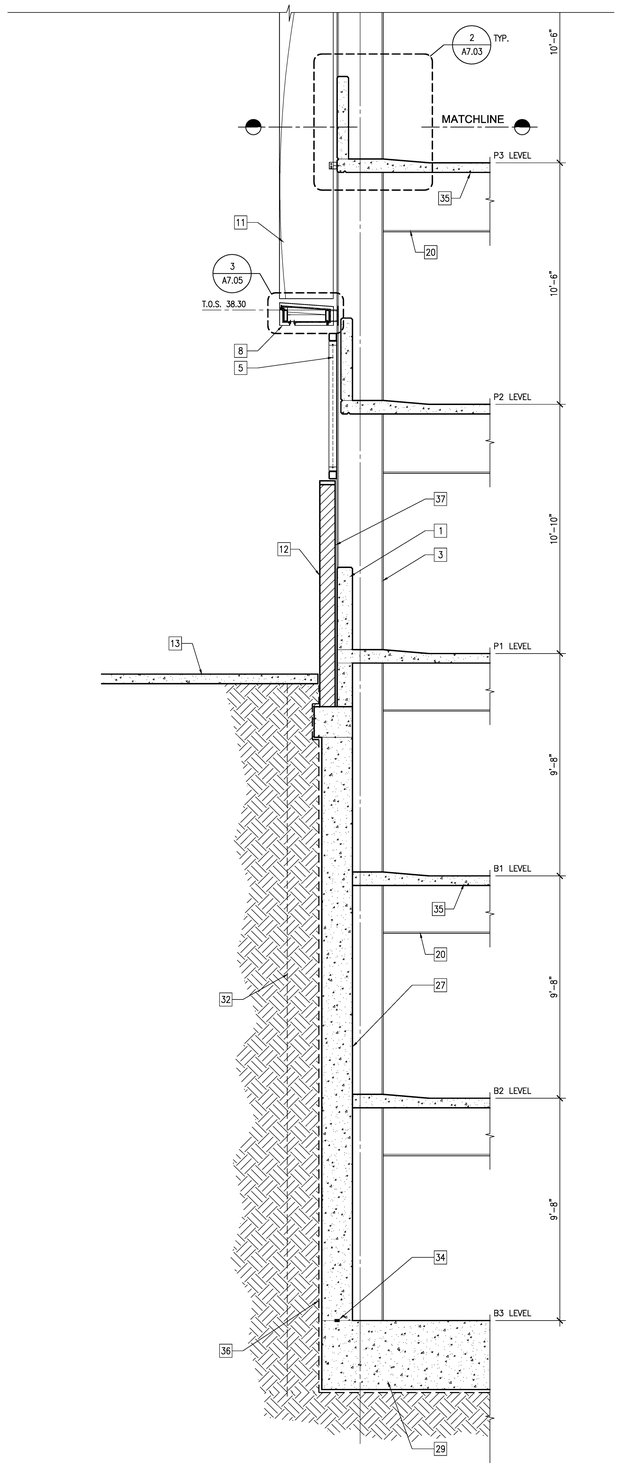


## WALL SECTION

SCALE: 3/8"=1'-0"

1

## KEY NOTES

| | | | | | | | |
|---|---|---|---|---|---|---|---|
| 1 CONCRETE SPANDREL | 6 STEEL STAIRS, PAINTED | 11 ANODIZED ALUMINUM FINS SET IN SUPPORT FRAME (DEFERRED APPROVAL) | 16 ILLUMINATED SIGNAGE | 21 LIGHT STANDARD, SEE ELECT. DWGS. | 26 CANTILEVERED CONCRETE DECK | 31 CONC. TRANSFER GIRDER, PAINTED (SEE STRUCT. DWGS.) | 36 WATERPROOFING (SEE WATERPROOFING DRAWINGS) |
| 2 CONCRETE UPTURNED BEAM | 7 METAL SCREENED LOUVER, PAINTED (SEE MECHANICAL DWGS.) | 12 GROUND-FACE CMU BLOCK | 17 PLASTER CONTROL JOINT, TYP. | 22 EDGE OF CONCRETE DECK | 27 RETAINING WALL, PAINTED (SEE STRUCT. DWGS.) | 32 SHORING | 37 CMU WALL , NO PAINT |
| 3 CONCRETE COLUMN | 8 ALUMINUM COMPOSITE PANELS OVER METAL STUD FRAMING (DEFERRED APPROVAL) | 13 FINISH SURFACE (SEE CIVIL DWGS.) | 18 CONCRETE SHEAR WALL | 23 EXPOSED STEEL SUPPORT, PAINTED | 28 PARKING CONTROL (SEE PLANS) | 33 LINE OF CANOPY | 38 CONCRETE SLAB, NO PAINT (SEE STRUCT. DWGS.) |
| 4 CMU WALL, PAINTED | 9 STEEL SHADE CANOPY SUPPORTS, PAINTED, (DEFERRED APPROVAL) | 14 CONCRETE STAIRS ON GRADE | 19 PORTLAND CEMENT PLASTER OVER METAL STUD FRAMING | 24 CONCRETE REVEAL, TYP. | 29 FOOTINGS, SEE STRUCT. | 34 CONTINUOUS BENTONITE WATERSTOP (TYP.) @ ALL COLD JOINTS | |
| 5 SECURITY SCREENING SET IN ALUMINUM STOREFRONT FRAME | 10 STEEL RAILING, PAINTED | 15 LINE OF STRUCTURE BELOW GRADE | 20 CONCRETE DOWNTURNED BEAM, PAINTED | 25 CABLE BARRIER, TYP. | 30 RETAINING WALL BEYOND | 35 CONCRETE SLAB, PAINTED (SEE STRUCT. DWGS.) | |

**County of San Diego**
**Cedar & Kettner**
**Development Project**
San Diego, California

McCARTHY

20401 S.W. BIRCH STREET SUITE 300
Newport Beach, California 92660

Architect

IPD

Alameda
Irvine
Los Angeles

Architecture / Engineering / Consulting
www.ipd-global.com

2 Faraday, Suite 101, Irvine CA 92618
Phone 949 595 8004 Fax 949 595 8011

| Revision | Date |
|---|---|
| 100% DESIGN DEVELOPMENT | 10/23/13 |
| 90% CDs - 1ST PLAN CHECK | 12/24/13 |
| 2ND PLAN CHECK | 04/23/14 |

| | |
|---|---|
| Date | |
| IPD Job No. | 13-813 |
| Drawn By | MS |
| Checked By | |
| Scale | 3/32" = 1'-0" |

CONSTRUCTION DOCUMENTS

Drawing Title

WALL SECTIONS

Drawing No.

**A6.01**

IPD, Inc.

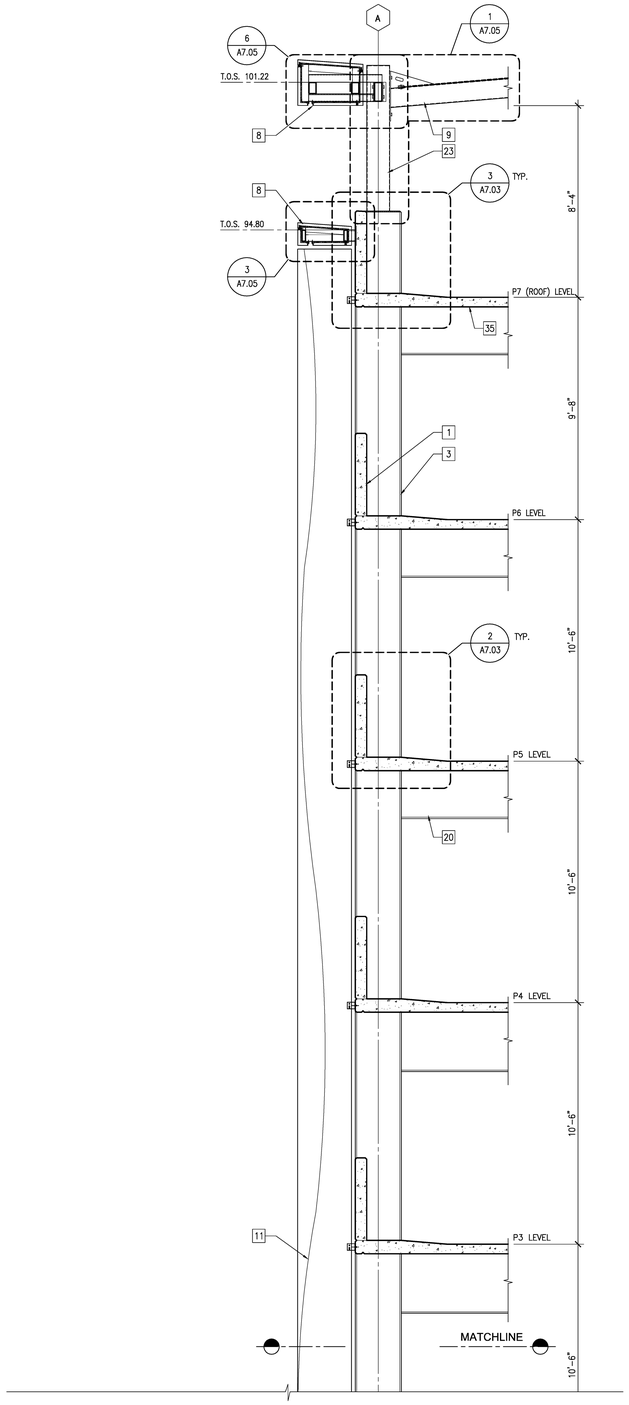


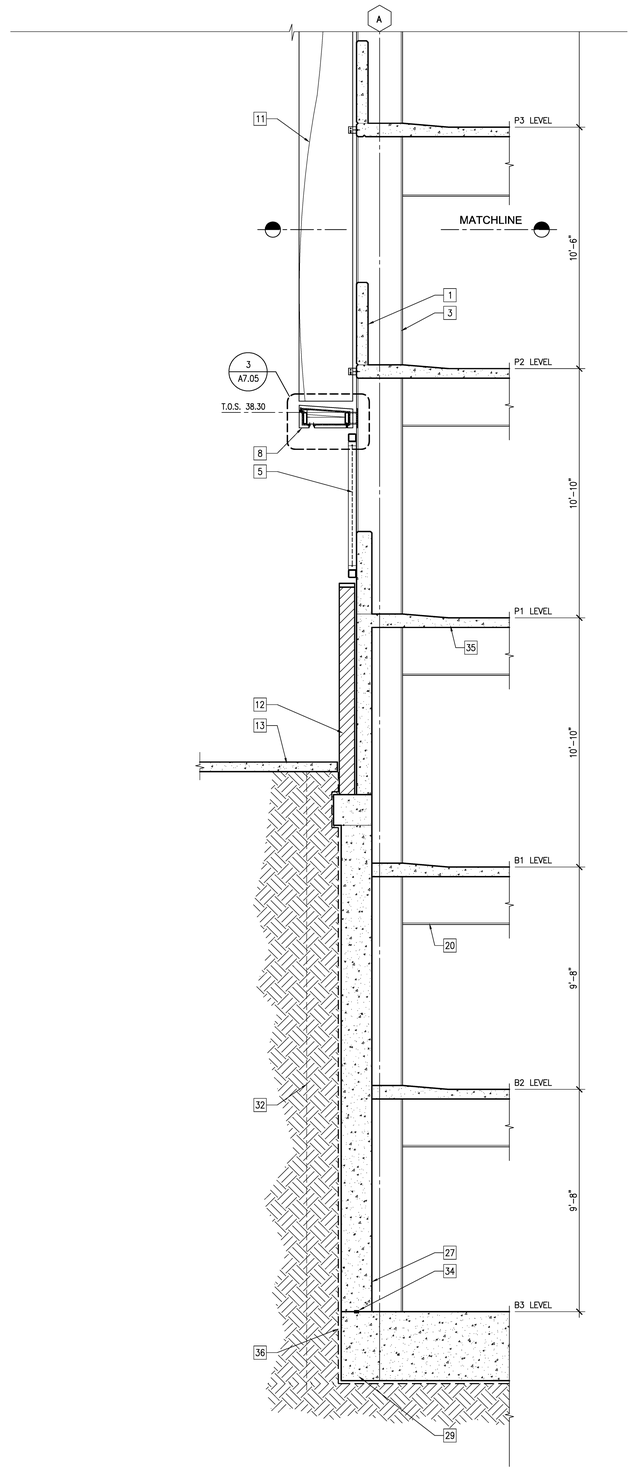


## WALL SECTION

SCALE: 3/8"=1'-0"

1

## KEY NOTES

| | | | | | | | |
|---|---|---|---|---|---|---|---|
| 1 CONCRETE SPANDREL | 6 STEEL STAIRS, PAINTED | 11 ANODIZED ALUMINUM FINS SET IN SUPPORT FRAME (DEFERRED APPROVAL) | 16 ILLUMINATED SIGNAGE | 21 LIGHT STANDARD, SEE ELECT. DWGS. | 26 CANTILEVERED CONCRETE DECK | 31 CONC. TRANSFER GIRDER, PAINTED (SEE STRUCT. DWGS.) | 36 WATERPROOFING (SEE WATERPROOFING DRAWINGS) |
| 2 CONCRETE UPTURNED BEAM | 7 METAL SCREENED LOUVER, PAINTED (SEE MECHANICAL DWGS.) | 12 GROUND-FACE CMU BLOCK | 17 PLASTER CONTROL JOINT, TYP. | 22 EDGE OF CONCRETE DECK | 27 RETAINING WALL, (SEE STRUCT. DWGS.) | 32 SHORING | 37 CMU WALL, NO PAINT |
| 3 CONCRETE COLUMN | 8 ALUMINUM COMPOSITE PANELS OVER METAL STUD FRAMING (DEFERRED APPROVAL) | 13 FINISH SURFACE (SEE CIVIL DWGS.) | 18 CONCRETE SHEAR WALL | 23 EXPOSED STEEL SUPPORT, PAINTED | 28 PARKING CONTROL (SEE PLANS) | 33 LINE OF CANOPY | 38 CONCRETE SLAB, NO PAINT (SEE STRUCT. DWGS.) |
| 4 CMU WALL, PAINTED | 9 STEEL SHADE CANOPY SUPPORTS, PAINTED, (DEFERRED APPROVAL) | 14 CONCRETE STAIRS ON GRADE | 19 PORTLAND CEMENT PLASTER OVER METAL STUD FRAMING | 24 CONCRETE REVEAL, TYP. | 29 FOOTINGS, SEE STRUCT. | 34 CONTINUOUS BENTONITE WATERSTOP (TYP.) @ ALL COLD JOINTS | |
| 5 SECURITY SCREENING SET IN ALUMINUM STOREFRONT FRAME | 10 STEEL RAILING, PAINTED | 15 LINE OF STRUCTURE BELOW GRADE | 20 CONCRETE DOWNTURNED BEAM, PAINTED | 25 CABLE BARRIER, TYP. | 30 RETAINING WALL BEYOND | 35 CONCRETE SLAB, PAINTED (SEE STRUCT. DWGS.) | |

**County of San Diego**
**Cedar & Kettner**
**Development Project**
San Diego, California

McCARTHY

20401 S.W. BIRCH STREET SUITE 300
Newport Beach, California 92660

Architect

IPD

Alameda
Irvine
Los Angeles

Architecture / Engineering / Consulting
www.ipd-global.com

2 Faraday, Suite 101, Irvine CA 92618
Phone 949 595 8004 Fax 949 595 8011

| Revision | Date |
|---|---|
| 100% DESIGN DEVELOPMENT | 10/23/13 |
| 90% CDs - 1ST PLAN CHECK | 12/24/13 |
| 2ND PLAN CHECK | 04/23/14 |

| | |
|---|---|
| Date | |
| IPD Job No. | 13-813 |
| Drawn By | MS |
| Checked By | |
| Scale | 3/32" = 1'-0" |

CONSTRUCTION DOCUMENTS

Drawing Title

WALL SECTIONS

Drawing No.

**A6.02**

IPD, Inc.

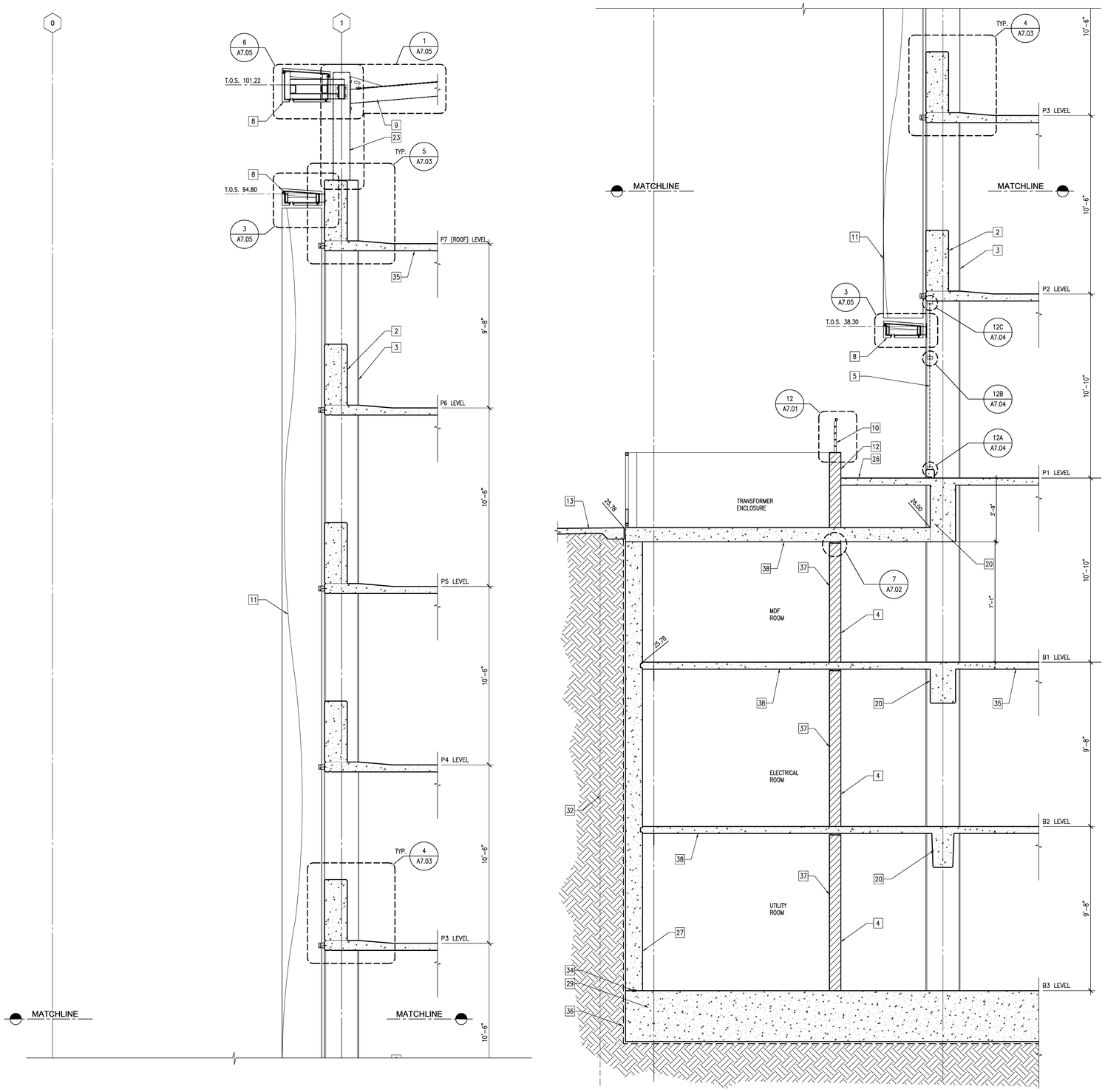


## WALL SECTION

SCALE: 3/8"=1'-0"

1

### KEY NOTES

| | | | | | | | | | | | | | | | |
|---|---|---|---|---|---|---|---|---|---|---|---|---|---|---|---|
| 1 | CONCRETE SPANDREL | 6 | STEEL STAIRS, PAINTED | 11 | ANODIZED ALUMINUM FINS SET IN SUPPORT FRAME (DEFERRED APPROVAL) | 16 | ILLUMINATED SIGNAGE | 21 | LIGHT STANDARD, SEE ELECT. DWGS. | 26 | CANTILEVERED CONCRETE DECK | 31 | CONC. TRANSFER GIRDER, PAINTED (SEE STRUCT. DWGS.) | 36 | WATERPROOFING (SEE WATERPROOFING DRAWINGS) |
| 2 | CONCRETE UPTURNED BEAM | 7 | METAL SCREENED LOUVER, PAINTED (SEE MECHANICAL DWGS.) | 12 | GROUND-FACE CMU BLOCK | 17 | PLASTER CONTROL JOINT, TYP. | 22 | EDGE OF CONCRETE DECK | 27 | RETAINING WALL, NO PAINT (SEE STRUCT. DWGS.) | 32 | SHORING | 37 | CMU WALL, NO PAINT |
| 3 | CONCRETE COLUMN | 8 | ALUMINUM COMPOSITE PANELS OVER METAL STUD FRAMING (DEFERRED APPROVAL) | 13 | FINISH SURFACE (SEE CIVIL DWGS.) | 18 | CONCRETE SHEAR WALL | 23 | EXPOSED STEEL SUPPORT, PAINTED | 28 | PARKING CONTROL (SEE PLANS) | 33 | LINE OF CANOPY | 38 | CONCRETE SLAB, NO PAINT (SEE STRUCT. DWGS.) |
| 4 | CMU WALL, PAINTED | 9 | STEEL SHADE CANOPY SUPPORTS, PAINTED, (DEFERRED APPROVAL) | 14 | CONCRETE STAIRS ON GRADE | 19 | PORTLAND CEMENT PLASTER OVER METAL STUD FRAMING | 24 | CONCRETE REVEAL, TYP. | 29 | FOOTINGS, SEE STRUCT. | 34 | CONTINUOUS BENTONITE WATERSTOP (TYP.) @ ALL COLD JOINTS | | |
| 5 | SECURITY SCREENING SET IN ALUMINUM STOREFRONT FRAME | 10 | GUARDRAIL, PAINTED | 15 | LINE OF STRUCTURE BELOW GRADE | 20 | CONCRETE DOWNTURNED BEAM, PAINTED, SEE STRUCT. DWGS. | 25 | CABLE BARRIER, TYP. | 30 | RETAINING WALL BEYOND | 35 | CONCRETE SLAB, PAINTED (SEE STRUCT. DWGS.) | | |

**County of San Diego**
**Cedar & Kettner**
**Development Project**
San Diego, California

McCARTHY
20401 S.W. BIRCH STREET SUITE 300
Newport Beach, California 92660

Architect
IPD
Alameda
Irvine
Los Angeles
Architecture / Engineering / Consulting
www.ipd-global.com
2 Faraday, Suite 101, Irvine CA 92618
Phone 949 595 8004 Fax 949 595 8011

| Revision | Date |
|---|---|
| 100% DESIGN DEVELOPMENT | 10/23/13 |
| 90% CDs - 1ST PLAN CHECK | 12/24/13 |
| 2ND PLAN CHECK | 04/23/14 |

| | |
|---|---|
| Date | |
| IPD Job No. | 13-813 |
| Drawn By | MS |
| Checked By | |
| Scale | 3/32" = 1'-0" |

CONSTRUCTION DOCUMENTS

Drawing Title
WALL SECTIONS

Drawing No.
**A6.03**

IPD, Inc.

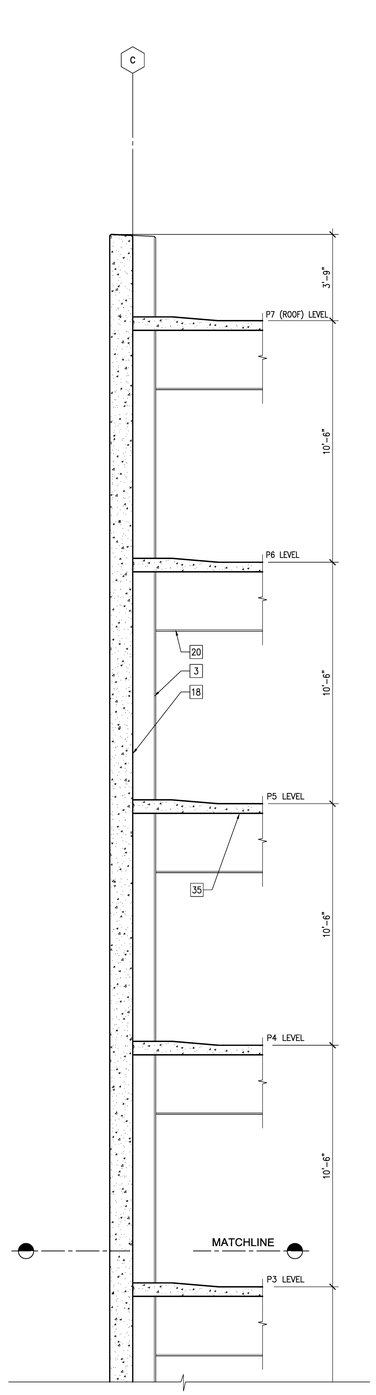


## WALL SECTION 2

SCALE: 3/8"=1'-0"

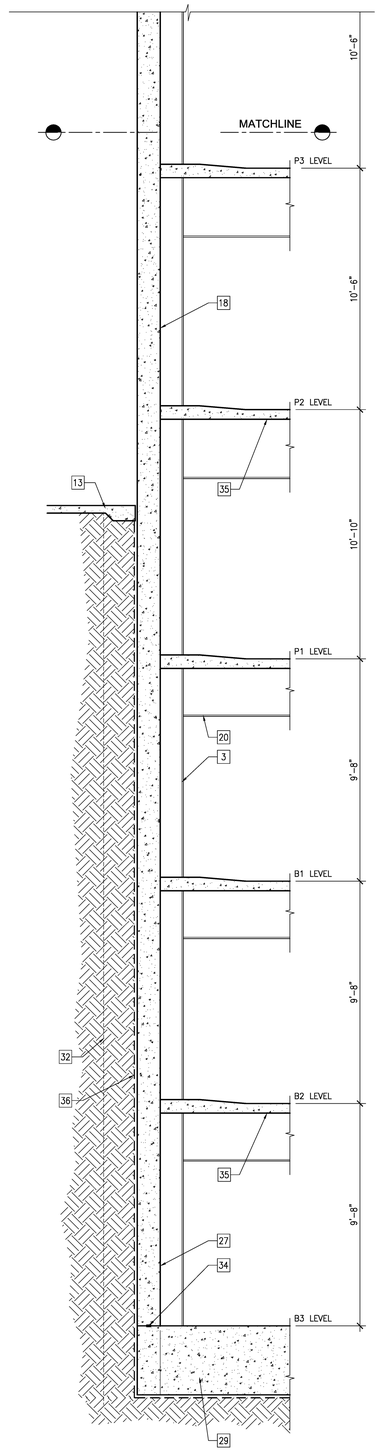


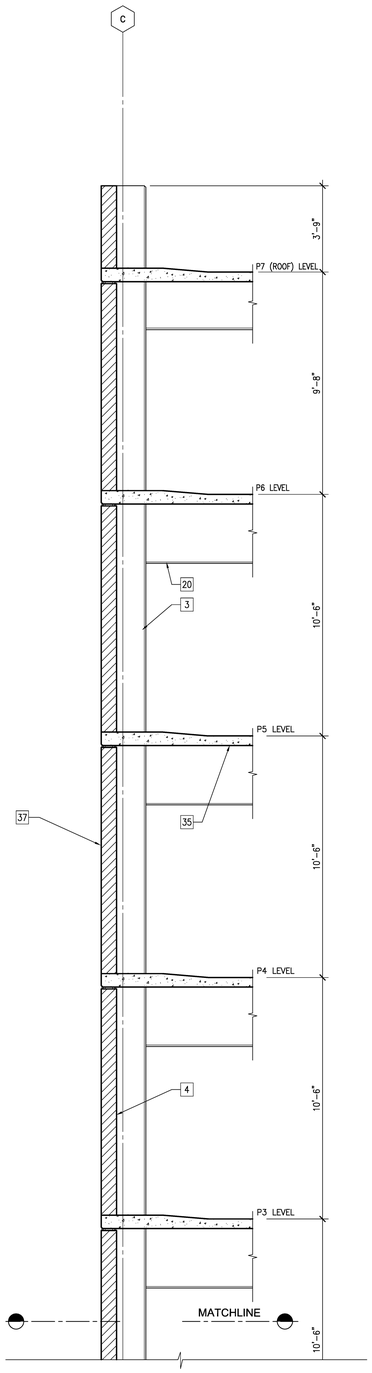


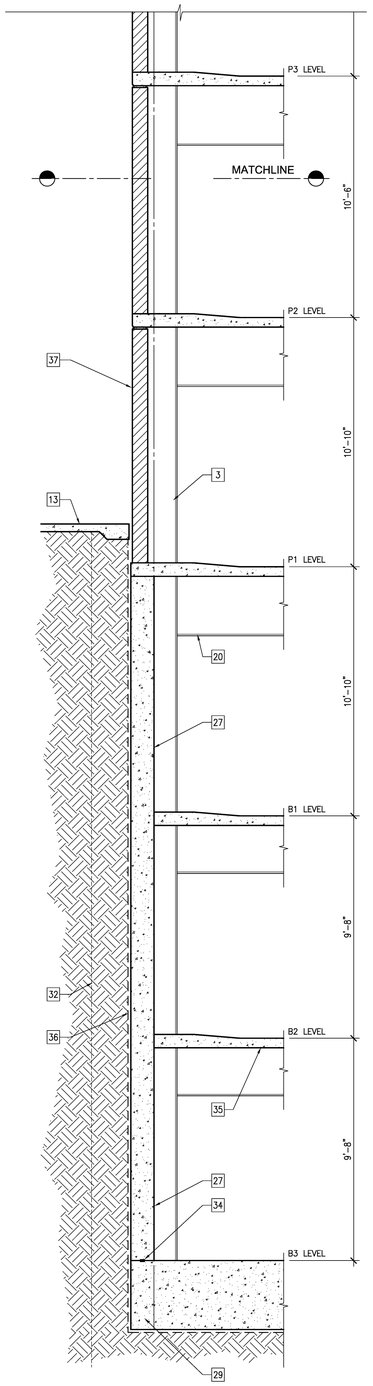


## WALL SECTION 1

SCALE: 3/8"=1'-0"

### KEY NOTES

| | | | | | | | |
|---|---|---|---|---|---|---|---|
| 1 CONCRETE SPANDREL | 6 STEEL STAIRS, PAINTED | 11 ANODIZED ALUMINUM FINS SET IN SUPPORT FRAME (DEFERRED APPROVAL) | 16 ILLUMINATED SIGNAGE | 21 LIGHT STANDARD, SEE ELECT. DWGS. | 26 CANTILEVERED CONCRETE DECK | 31 CONC. TRANSFER GIRDER, PAINTED (SEE STRUCT. DWGS.) | 36 WATERPROOFING (SEE WATERPROOFING DRAWINGS) |
| 2 CONCRETE UPTURNED BEAM | 7 METAL SCREENED LOUVER, PAINTED (SEE MECHANICAL DWGS.) | 12 GROUND-FACE CMU BLOCK | 17 PLASTER CONTROL JOINT, TYP. | 22 EDGE OF CONCRETE DECK | 27 RETAINING WALL, (SEE STRUCT. DWGS.) | 32 SHORING | 37 CMU WALL, NO PAINT |
| 3 CONCRETE COLUMN | 8 ALUMINUM COMPOSITE PANELS OVER METAL STUD FRAMING (DEFERRED APPROVAL) | 13 FINISH SURFACE (SEE CIVIL DWGS.) | 18 CONCRETE SHEAR WALL | 23 EXPOSED STEEL SUPPORT, PAINTED | 28 PARKING CONTROL (SEE PLANS) | 33 LINE OF CANOPY | 38 CONCRETE SLAB, NO PAINT (SEE STRUCT. DWGS.) |
| 4 CMU WALL, PAINTED | 9 STEEL SHADE CANOPY SUPPORTS, PAINTED, (DEFERRED APPROVAL) | 14 CONCRETE STAIRS ON GRADE | 19 PORTLAND CEMENT PLASTER OVER METAL STUD FRAMING | 24 CONCRETE REVEAL, TYP. | 29 FOOTINGS, SEE STRUCT. | 34 CONTINUOUS BENTONITE WATERSTOP (TYP.) ● ALL COLD JOINTS | |
| 5 SECURITY SCREENING SET IN ALUMINUM STOREFRONT FRAME | 10 STEEL RAILING, PAINTED | 15 LINE OF STRUCTURE BELOW GRADE | 20 CONCRETE DOWNTURNED BEAM, PAINTED | 25 CABLE BARRIER, TYP. | 30 RETAINING WALL BEYOND | 35 CONCRETE SLAB, PAINTED (SEE STRUCT. DWGS.) | |

**County of San Diego**
**Cedar & Kettner**
**Development Project**
San Diego, California

McCARTHY

20401 S.W. BIRCH STREET SUITE 300
Newport Beach, California 92660

Architect

IPD

Alameda
Irvine
Los Angeles

Architecture / Engineering / Consulting
www.ipd-global.com

2 Faraday, Suite 101, Irvine CA 92618
Phone 949 595 8004 Fax 949 595 8011

| Revision | Date |
|---|---|
| 100% DESIGN DEVELOPMENT | 10/23/13 |
| 90% CDs - 1ST PLAN CHECK | 12/24/13 |
| 2ND PLAN CHECK | 04/23/14 |

| | |
|---|---|
| Date | |
| IPD Job No. | 13-813 |
| Drawn By | MS |
| Checked By | |
| Scale | 3/32" = 1'-0" |

CONSTRUCTION DOCUMENTS

Drawing Title

WALL SECTIONS

Drawing No.

**A6.04**

IPD, Inc.

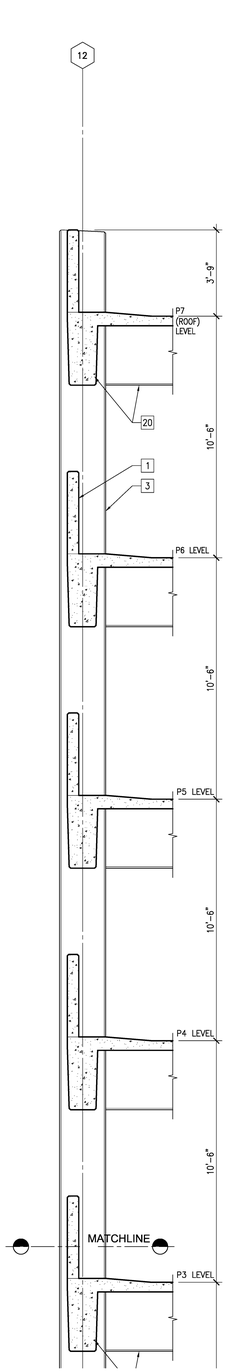


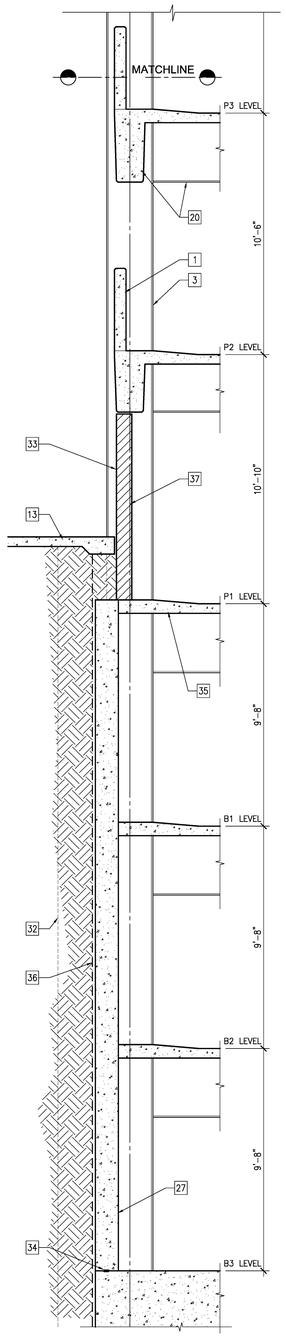


**WALL SECTION** 2

SCALE: 3/8"=1'-0"

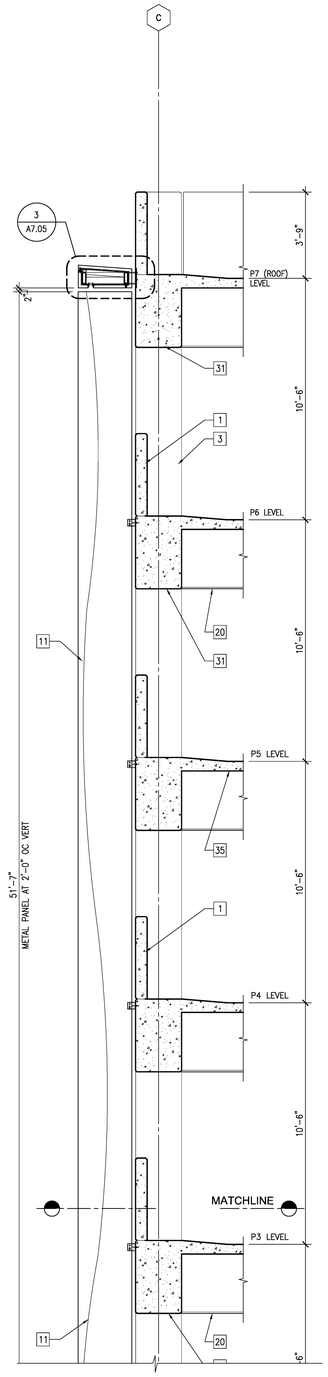


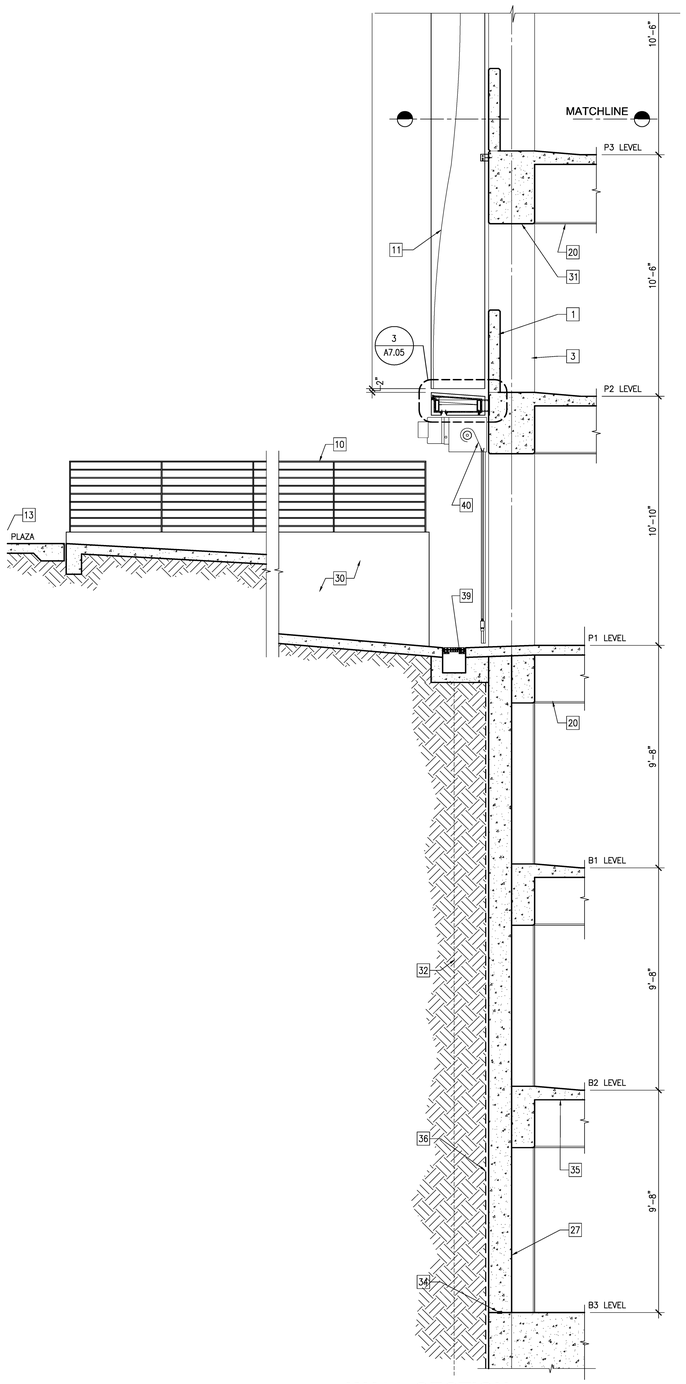


**WALL SECTION** 1

SCALE: 3/8"=1'-0"

## KEY NOTES

| | | | | | | | | | | | | | | | |
|---|---|---|---|---|---|---|---|---|---|---|---|---|---|---|---|
| 1 | CONCRETE SPANDREL, PAINTED, (SEE STRUCT. DWGS.) | 6 | STEEL STAIRS, PAINTED | 11 | ANODIZED ALUMINUM FINS SET IN SUPPORT FRAME (DEFERRED APPROVAL) | 16 | ILLUMINATED SIGNAGE | 21 | LIGHT STANDARD, SEE ELECT. DWGS. | 26 | CANTILEVERED CONCRETE DECK | 31 | CONC. TRANSFER GIRDER, PAINTED (SEE STRUCT. DWGS.) | 36 | WATERPROOFING (SEE WATERPROOFING DRAWINGS) |
| 2 | CONCRETE UPTURNED BEAM, PAINTED, (SEE STRUCT. DWGS.) | 7 | METAL SCREENED LOUVER, PAINTED (SEE MECHANICAL DWGS.) | 12 | GROUND-FACE CMU BLOCK | 17 | PLASTER CONTROL JOINT, TYP. | 22 | EDGE OF CONCRETE DECK | 27 | RETAINING WALL, PAINTED (SEE STRUCT. DWGS.) | 32 | SHORING | 37 | CMU WALL, PAINTED |
| 3 | CONCRETE COLUMN, PAINTED, (SEE STRUCT. DWGS.) | 8 | ALUMINUM COMPOSITE PANELS OVER METAL STUD FRAMING (DEFERRED APPROVAL) | 13 | FINISH SURFACE (SEE CIVIL DWGS.) | 18 | CONCRETE SHEAR WALL | 23 | EXPOSED STEEL SUPPORT, PAINTED | 28 | PARKING CONTROL (SEE PLANS) | 33 | CMU WALL, NO PAINT | 38 | CONCRETE SLAB, NO PAINT (SEE STRUCT. DWGS.) |
| 4 | ALUMINUM COMPOSITE PANELS OVER CONCRETE – DEFERRED APPROVAL | 9 | STEEL SHADE CANOPY SUPPORTS, PAINTED, (DEFERRED APPROVAL) | 14 | CONCRETE STAIRS ON GRADE | 19 | PORTLAND CEMENT PLASTER OVER METAL STUD FRAMING | 24 | CONCRETE REVEAL, TYP. | 29 | FOOTINGS, (SEE STRUCT. DWGS.) | 34 | CONTINUOUS BENTONITE WATERSTOP (TYP.) ❶ ALL COLD JOINTS | 39 | TRENCH DRAIN, SEE PLUMBING DRAWINGS |
| 5 | SECURITY SCREENING SET IN ALUMINUM STOREFRONT FRAME | 10 | STEEL RAILING, PAINTED | 15 | LINE OF STRUCTURE BELOW GRADE | 20 | CONCRETE DOWNTURNED BEAM, PAINTED, SEE STRUCT. | 25 | CABLE BARRIER, TYP. | 30 | RETAINING WALL BEYOND | 35 | CONCRETE SLAB, PAINTED (SEE STRUCT. DWGS.) | 40 | OVERHEAD COILING GRILLE |

**County of San Diego**
**Cedar & Kettner**
**Development Project**
San Diego, California

McCARTHY

20401 S.W. BIRCH STREET SUITE 300
Newport Beach, California 92660

Architect

IPD

Alameda
Irvine
Los Angeles

Architecture / Engineering / Consulting
www.ipd-global.com

2 Faraday, Suite 101, Irvine CA 92618
Phone 949 595 8004 Fax 949 595 8011

| Revision | Date |
|---|---|
| 100% DESIGN DEVELOPMENT | 10/23/13 |
| 90% CDs - 1ST PLAN CHECK | 12/24/13 |
| 2ND PLAN CHECK | 04/23/14 |

| | |
|---|---|
| Date | |
| IPD Job No. | 13-813 |
| Drawn By | MS |
| Checked By | |
| Scale | 3/32" = 1'-0" |

CONSTRUCTION DOCUMENTS

Drawing Title

WALL SECTIONS

Drawing No.

**A6.05**

IPD, Inc.

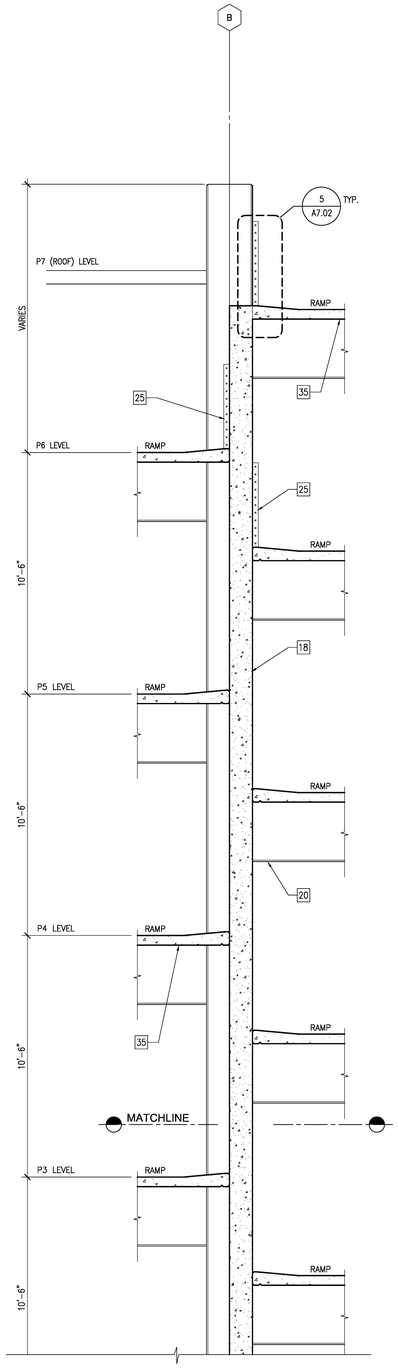


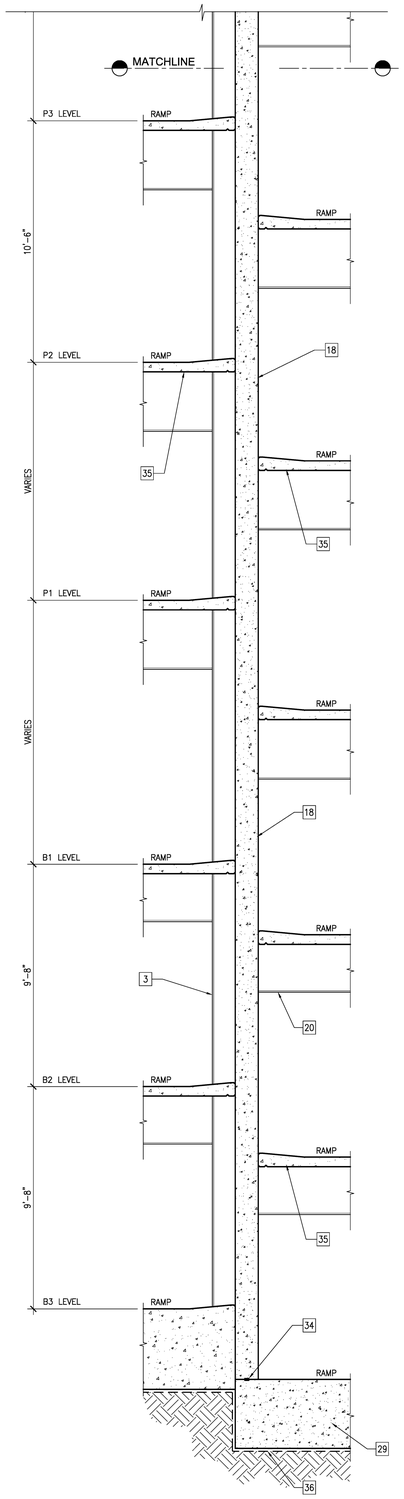


## WALL SECTION

SCALE: 3/8"=1'-0"

2

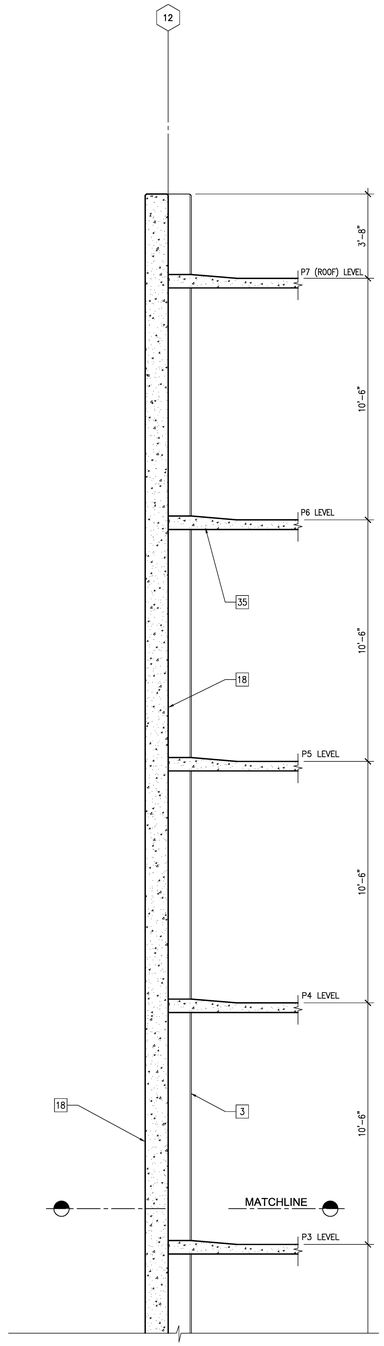


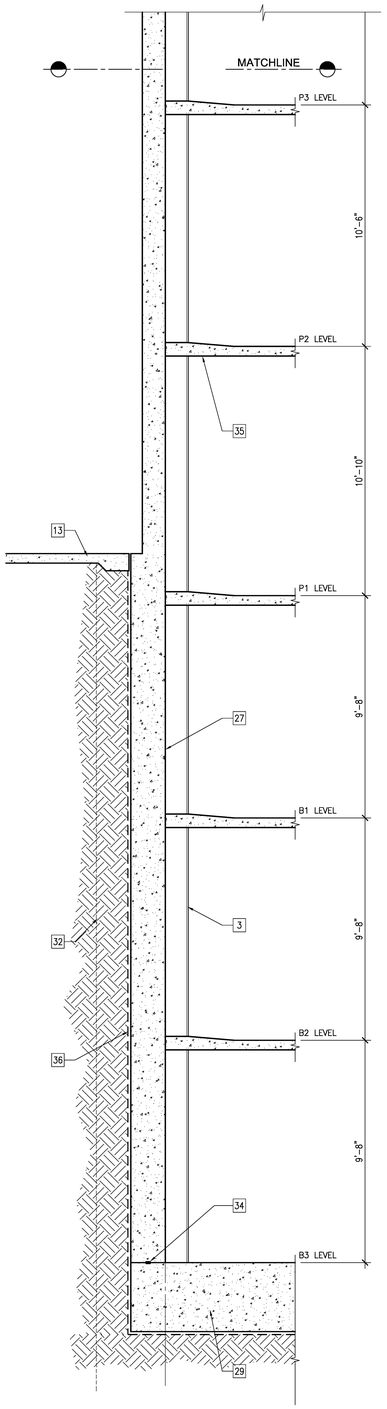


## WALL SECTION

SCALE: 3/8"=1'-0"

1

## KEY NOTES

| | | | | | | | | | | | | | | | |
|---|---|---|---|---|---|---|---|---|---|---|---|---|---|---|---|
| 1 | CONCRETE SPANDREL, PAINTED (SEE STRUCT. DWGS.) | 6 | STEEL STAIRS, PAINTED | 11 | ANODIZED ALUMINUM FINS SET IN SUPPORT FRAME (DEFERRED APPROVAL) | 16 | ILLUMINATED SIGNAGE | 21 | LIGHT STANDARD, (SEE ELECT. DWGS.) | 26 | CANTILEVERED CONCRETE DECK | 31 | CONC. TRANSFER GIRDER, PAINTED (SEE STRUCT. DWGS.) | 36 | WATERPROOFING (SEE WATERPROOFING DRAWINGS) |
| 2 | CONCRETE UPTURNED BEAM, PAINTED, SEE STRUCT. DWGS. | 7 | METAL SCREENED LOUVER, PAINTED (SEE MECHANICAL DWGS.) | 12 | GROUND-FACE CMU BLOCK | 17 | PLASTER CONTROL JOINT, TYP. | 22 | EDGE OF CONCRETE DECK | 27 | RETAINING WALL, PAINTED (SEE STRUCT. DWGS.) | 32 | SHORING | 37 | CMU WALL |
| 3 | CONCRETE COLUMN, PAINTED, SEE STRUCT. | 8 | ALUMINUM COMPOSITE PANELS OVER METAL STUD FRAMING (DEFERRED APPROVAL) | 13 | FINISH SURFACE (SEE CIVIL DWGS.) | 18 | CONCRETE SHEAR WALL, PAINTED (SEE STRUCT. DWGS.) | 23 | EXPOSED STEEL SUPPORT, PAINTED | 28 | PARKING CONTROL (SEE PLANS) | 33 | LINE OF CANOPY | 38 | CONCRETE SLAB, NO PAINT (SEE STRUCT. DWGS.) |
| 4 | ALUMINUM COMPOSITE PANELS OVER CONCRETE – DEFERRED APPROVAL | 9 | STEEL SHADE CANOPY SUPPORTS, PAINTED, (DEFERRED APPROVAL) | 14 | CONCRETE STAIRS ON GRADE | 19 | PORTLAND CEMENT PLASTER OVER METAL STUD FRAMING | 24 | CONCRETE REVEAL, TYP. | 29 | FOOTINGS, (SEE STRUCT. DWGS.) | 34 | CONTINUOUS BENTONITE WATERSTOP (TYP.) @ ALL COLD JOINTS | | |
| 5 | SECURITY SCREENING SET IN ALUMINUM STOREFRONT FRAME | 10 | STEEL RAILING, PAINTED | 15 | LINE OF STRUCTURE BELOW GRADE | 20 | CONCRETE DOWNTURNED BEAM, PAINTED (SEE STRUCT. DWGS.) | 25 | CABLE BARRIER, TYP. | 30 | RETAINING WALL BEYOND | 35 | CONCRETE SLAB, PAINTED (SEE STRUCT. DWGS.) | | |

**County of San Diego**
**Cedar & Kettner**
**Development Project**
San Diego, California

McCARTHY

20401 S.W. BIRCH STREET SUITE 300
Newport Beach, California 92660

Architect

IPD

Alameda
Irvine
Los Angeles

Architecture / Engineering / Consulting
www.ipd-global.com

2 Faraday, Suite 101, Irvine CA 92618
Phone 949 595 8004 Fax 949 595 8011

| Revision | Date |
|---|---|
| 100% DESIGN DEVELOPMENT | 10/23/13 |
| 90% CDs - 1ST PLAN CHECK | 12/24/14 |
| 2ND PLAN CHECK | 04/23/14 |

| | |
|---|---|
| Date | |
| IPD Job No. | 13-813 |
| Drawn By | MS |
| Checked By | |
| Scale | 3/32" = 1'-0" |

CONSTRUCTION DOCUMENTS

Drawing Title

WALL SECTIONS

Drawing No.

**A6.06**

IPD, Inc.

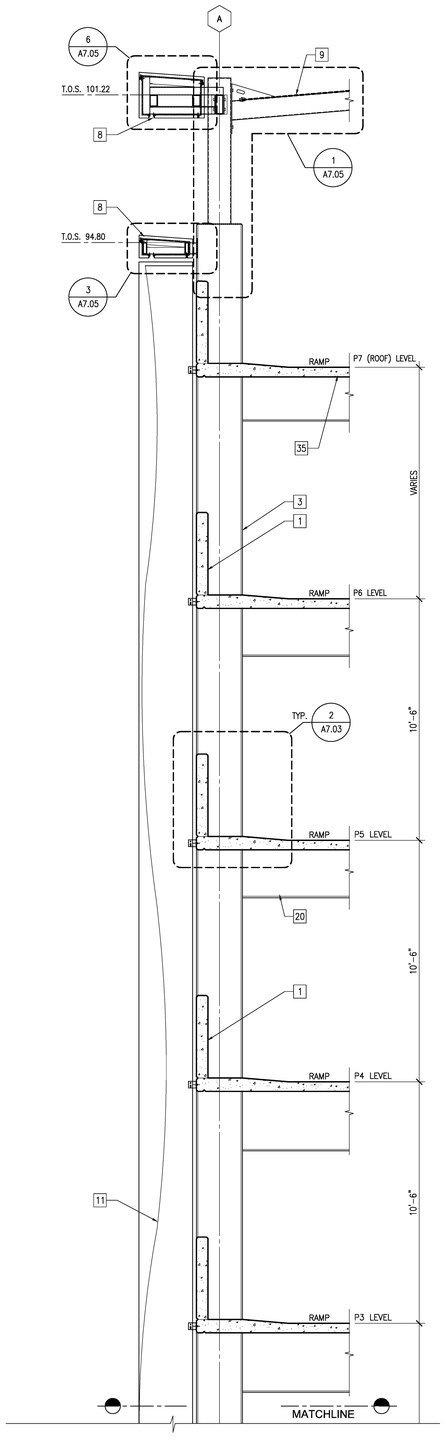


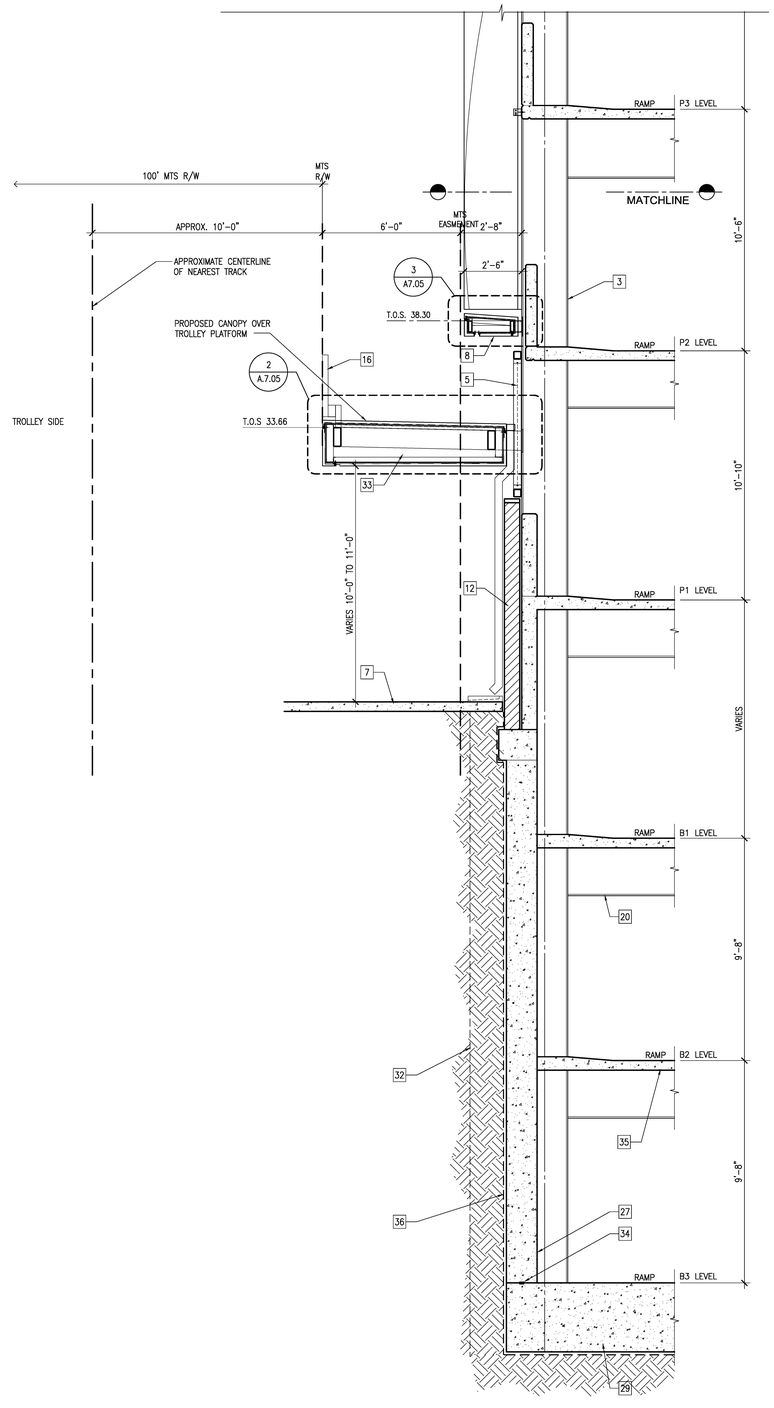


## WALL SECTION

SCALE: 3/8"=1'-0"

1

## KEY NOTES

| | | | | | | | |
|---|---|---|---|---|---|---|---|
| 1 CONCRETE SPANDREL, PAINTED (SEE STRUCT. DWGS.) | 6 STEEL STAIRS, PAINTED | 11 ANODIZED ALUMINUM FINS SET IN SUPPORT FRAME (DEFERRED APPROVAL) | 16 ILLUMINATED SIGNAGE | 21 LIGHT STANDARD, (SEE ELECT. DWGS.) | 26 CANTILEVERED CONCRETE DECK | 31 CONC. TRANSFER GIRDER, PAINTED (SEE STRUCT. DWGS.) | 36 WATERPROOFING (SEE WATERPROOFING DRAWINGS) |
| 2 CONCRETE UPTURNED BEAM, PAINTED, (SEE STRUCT. DWGS.) | 7 METAL SCREENED LOUVER, PAINTED (SEE MECHANICAL DWGS.) | 12 GROUND-FACE CMU BLOCK | 17 PLASTER CONTROL JOINT, TYP. | 22 EDGE OF CONCRETE DECK | 27 RETAINING WALL, PAINTED (SEE STRUCT. DWGS.) | 32 SHORING | 37 CMU WALL, PAINTED |
| 3 CONCRETE COLUMN, PAINTED, (SEE STRUCT. DWGS.) | 8 ALUMINUM COMPOSITE PANELS OVER METAL STUD FRAMING (DEFERRED APPROVAL) | 13 FINISH SURFACE (SEE CIVIL DWGS.) | 18 CONCRETE SHEAR WALL | 23 EXPOSED STEEL SUPPORT, PAINTED | 28 PARKING CONTROL (SEE PLANS) | 33 LINE OF CANOPY | 38 CONCRETE SLAB, NO PAINT (SEE STRUCT. DWGS.) |
| 4 ALUMINUM COMPOSITE PANELS OVER CONCRETE – DEFERRED APPROVAL | 9 STEEL SHADE CANOPY SUPPORTS, PAINTED, (DEFERRED APPROVAL) | 14 CONCRETE STAIRS ON GRADE | 19 PORTLAND CEMENT PLASTER OVER METAL STUD FRAMING | 24 CONCRETE REVEAL, TYP. | 29 FOOTINGS, (SEE STRUCT. DWGS.) | 34 CONTINUOUS BENTONITE WATERSTOP (TYP.) @ ALL COLD JOINTS | |
| 5 SECURITY SCREENING SET IN ALUMINUM STOREFRONT FRAME | 10 STEEL RAILING, PAINTED | 15 LINE OF STRUCTURE BELOW GRADE | 20 CONCRETE DOWNTURNED BEAM, PAINTED, SEE STRUCT. | 25 CABLE BARRIER, TYP. | 30 RETAINING WALL BEYOND | 35 CONCRETE SLAB, PAINTED (SEE STRUCT. DWGS.) | |

**County of San Diego**
**Cedar & Kettner**
**Development Project**
San Diego, California

McCARTHY

20401 S.W. BIRCH STREET SUITE 300
Newport Beach, California 92660

Architect

IPD

Alameda
Irvine
Los Angeles

Architecture / Engineering / Consulting
www.ipd-global.com

2 Faraday, Suite 101, Irvine CA 92618
Phone 949 595 8004 Fax 949 595 8011

| Revision | Date |
|---|---|
| 100% DESIGN DEVELOPMENT | 10/23/13 |
| 90% CDs - 1ST PLAN CHECK | 12/24/13 |
| 2ND PLAN CHECK | 04/23/14 |

| | |
|---|---|
| Date | |
| IPD Job No. | 13-813 |
| Drawn By | MS |
| Checked By | |
| Scale | 3/32" = 1'-0" |

CONSTRUCTION DOCUMENTS

Drawing Title

WALL SECTIONS

Drawing No.

**A6.07**

IPD, Inc.

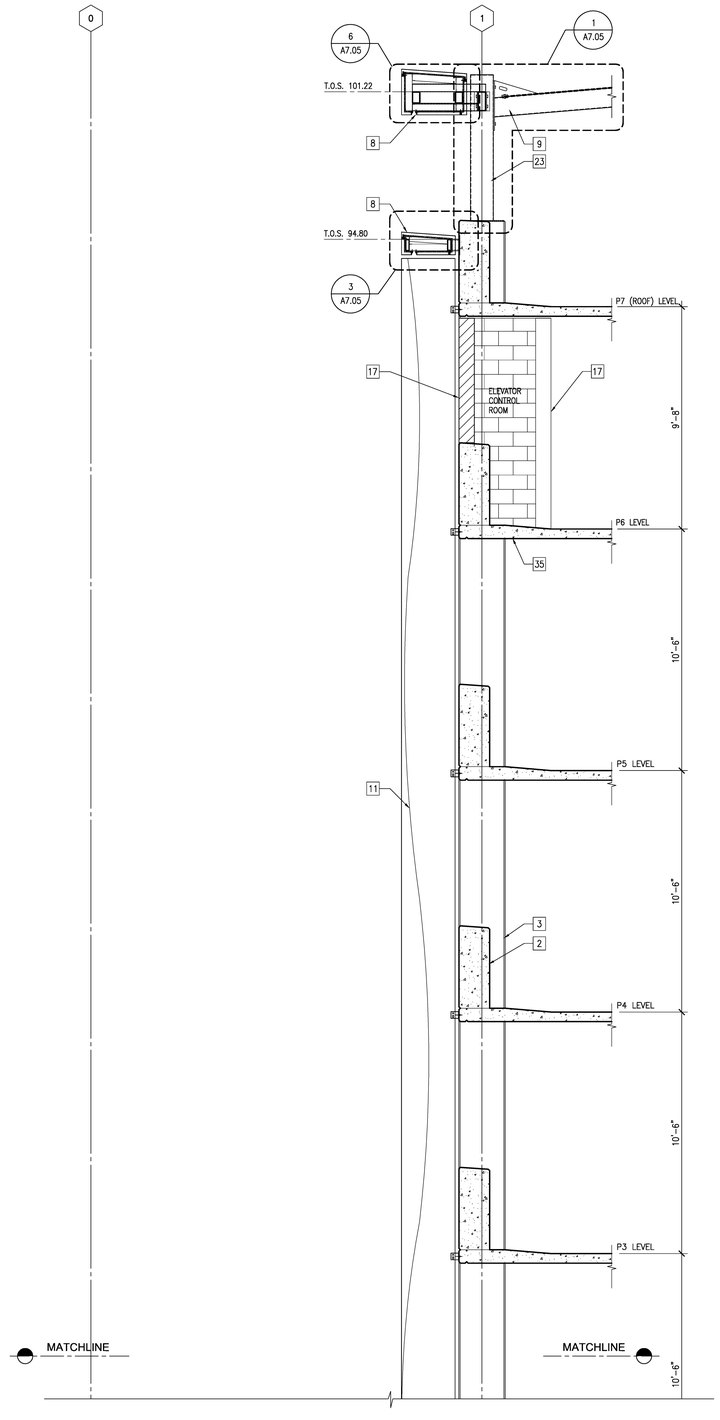


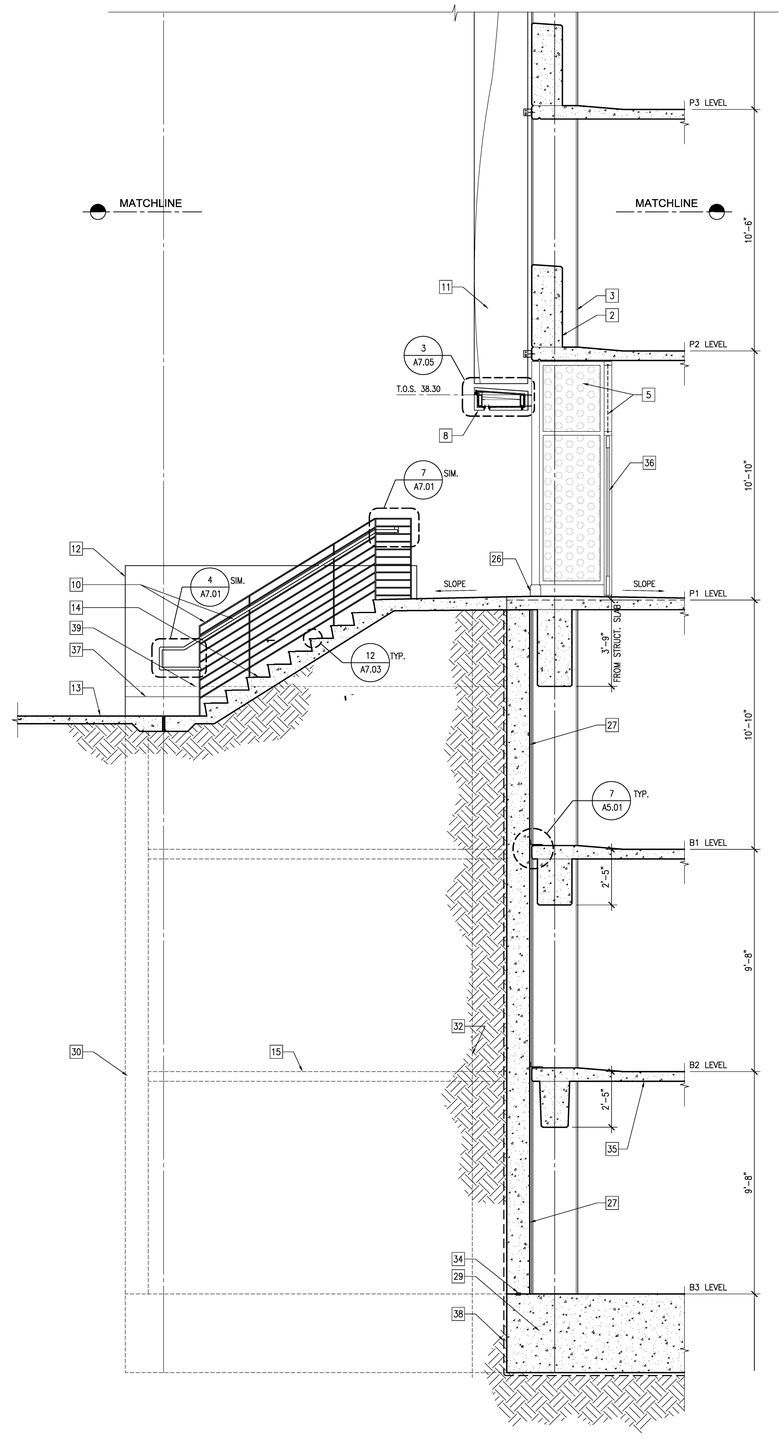


## WALL SECTION

SCALE: 3/8"=1'-0"

1

### KEY NOTES

| | | | | | | | | | | | | | | | |
|---|---|---|---|---|---|---|---|---|---|---|---|---|---|---|---|
| 1 | CONCRETE SPANDREL, PAINTED, (SEE STRUCT. DWGS.) | 6 | STEEL STAIRS, PAINTED | 11 | ANODIZED ALUMINUM FINS SET IN SUPPORT FRAME (DEFERRED APPROVAL) | 16 | ILLUMINATED SIGNAGE | 21 | LIGHT STANDARD, (SEE ELECT. DWGS.) | 26 | 4" HIGH CONCRETE CURB, TYP. | 31 | CONC. TRANSFER GIRDER, PAINTED (SEE STRUCT. DWGS.) | 36 | ALUM. DOOR AND FRAME |
| 2 | CONCRETE UPTURNED BEAM, PAINTED, (SEE STRUCT. DWGS.) | 7 | METAL SCREENED LOUVER, PAINTED (SEE MECHANICAL DWGS.) | 12 | GROUND-FACE CMU BLOCK | 17 | CMU WALL, PAINTED | 22 | EDGE OF CONCRETE DECK | 27 | RETAINING WALL, PAINTED (SEE STRUCT. DWGS.) | 32 | SHORING | 37 | LINE OF BASE OF WALL BEYOND |
| 3 | CONCRETE COLUMN, PAINTED, (SEE STRUCT. DWGS.) | 8 | ALUMINUM COMPOSITE PANELS OVER METAL STUD FRAMING (DEFERRED APPROVAL) | 13 | FINISH SURFACE (SEE CIVIL DWGS.) | 18 | CONCRETE SHEAR WALL | 23 | EXPOSED STEEL SUPPORT, PAINTED | 28 | PARKING CONTROL, SEE PLANS | 33 | LINE OF CANOPY | 38 | WATERPROOFING (SEE WATERPROOFING DRAWINGS) |
| 4 | DIRECT APPLIED PORTLAND CEMENT PLASTER OVER CMU | 9 | STEEL SHADE CANOPY SUPPORTS, PAINTED, (DEFERRED APPROVAL) | 14 | CONCRETE STAIRS ON GRADE | 19 | PORTLAND CEMENT PLASTER OVER METAL STUD FRAMING | 24 | CONCRETE REVEAL, TYP. | 29 | FOOTINGS, (SEE STRUCT. DWGS.) | 34 | CONTINUOUS BENTONITE WATERSTOP (TYP.) @ ALL COLD JOINTS | 39 | LINE OF BOTTOM DECK BEYOND |
| 5 | SECURITY SCREENING SET IN ALUMINUM STOREFRONT FRAME | 10 | GUARDRAIL/HANDRAIL, PAINTED | 15 | LINE OF STRUCTURE BELOW GRADE | 20 | CONCRETE DOWNTURNED BEAM, PAINTED | 25 | CABLE BARRIER, TYP. | 30 | RETAINING WALL BEYOND | 35 | CONCRETE SLAB, PAINTED (SEE STRUCT. DWGS.) | | |

**County of San Diego**
**Cedar & Kettner**
**Development Project**
San Diego, California

McCARTHY

20401 S.W. BIRCH STREET SUITE 300
Newport Beach, California 92660

Architect

IPD

Alameda
Irvine
Los Angeles

Architecture / Engineering / Consulting
www.ipd-global.com

2 Faraday, Suite 101, Irvine CA 92618
Phone 949 595 8004 Fax 949 595 8011

| Revision | Date |
|---|---|
| 100% DESIGN DEVELOPMENT | 10/23/13 |
| 90% CDs - 1ST PLAN CHECK | 12/24/13 |
| 2ND PLAN CHECK | 04/23/14 |

| | |
|---|---|
| Date | |
| IPD Job No. | 13-813 |
| Drawn By | MS |
| Checked By | |
| Scale | 3/32" = 1'-0" |

CONSTRUCTION DOCUMENTS

Drawing Title

WALL SECTIONS

Drawing No.

**A6.08**

IPD, Inc.

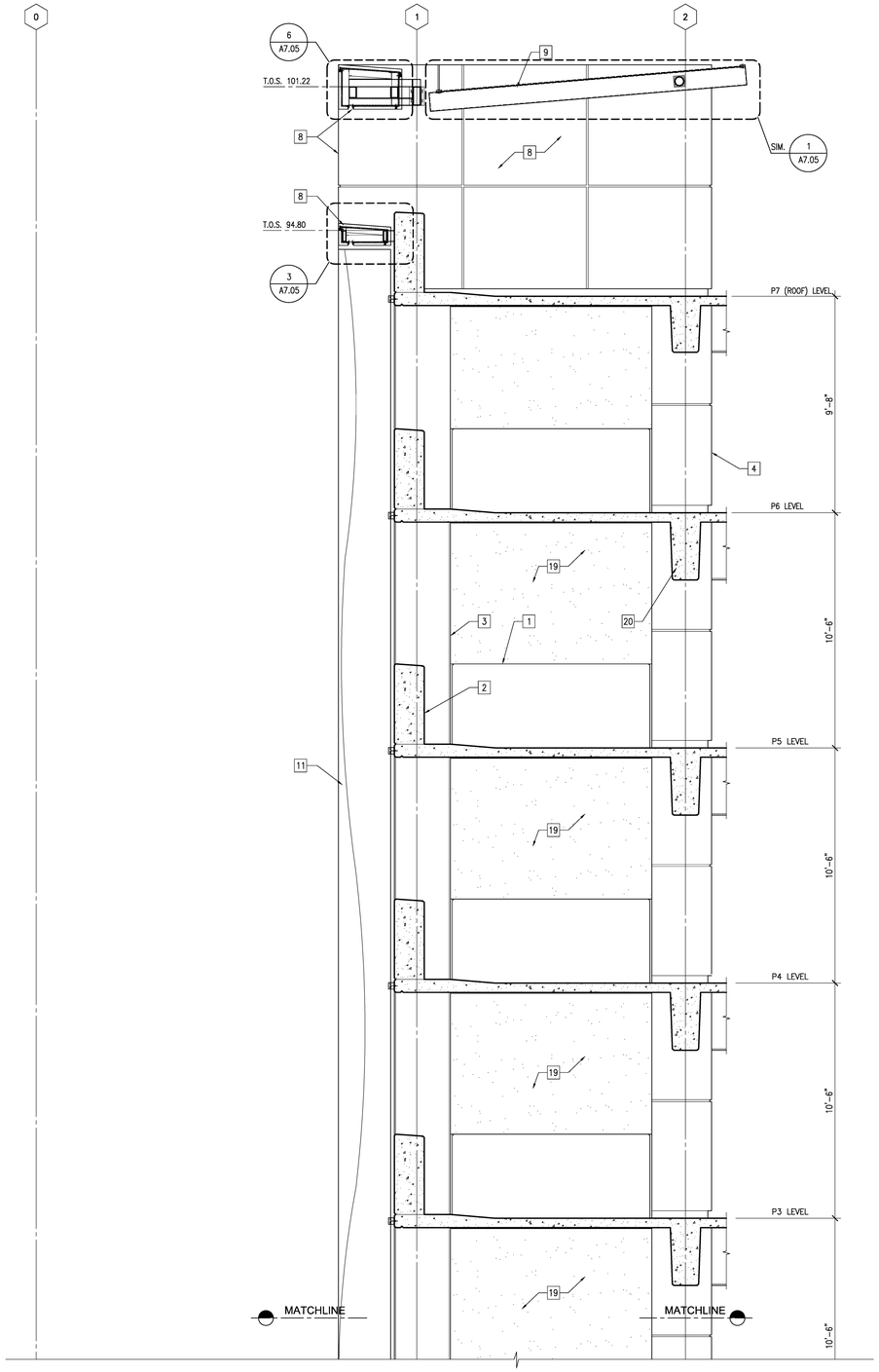


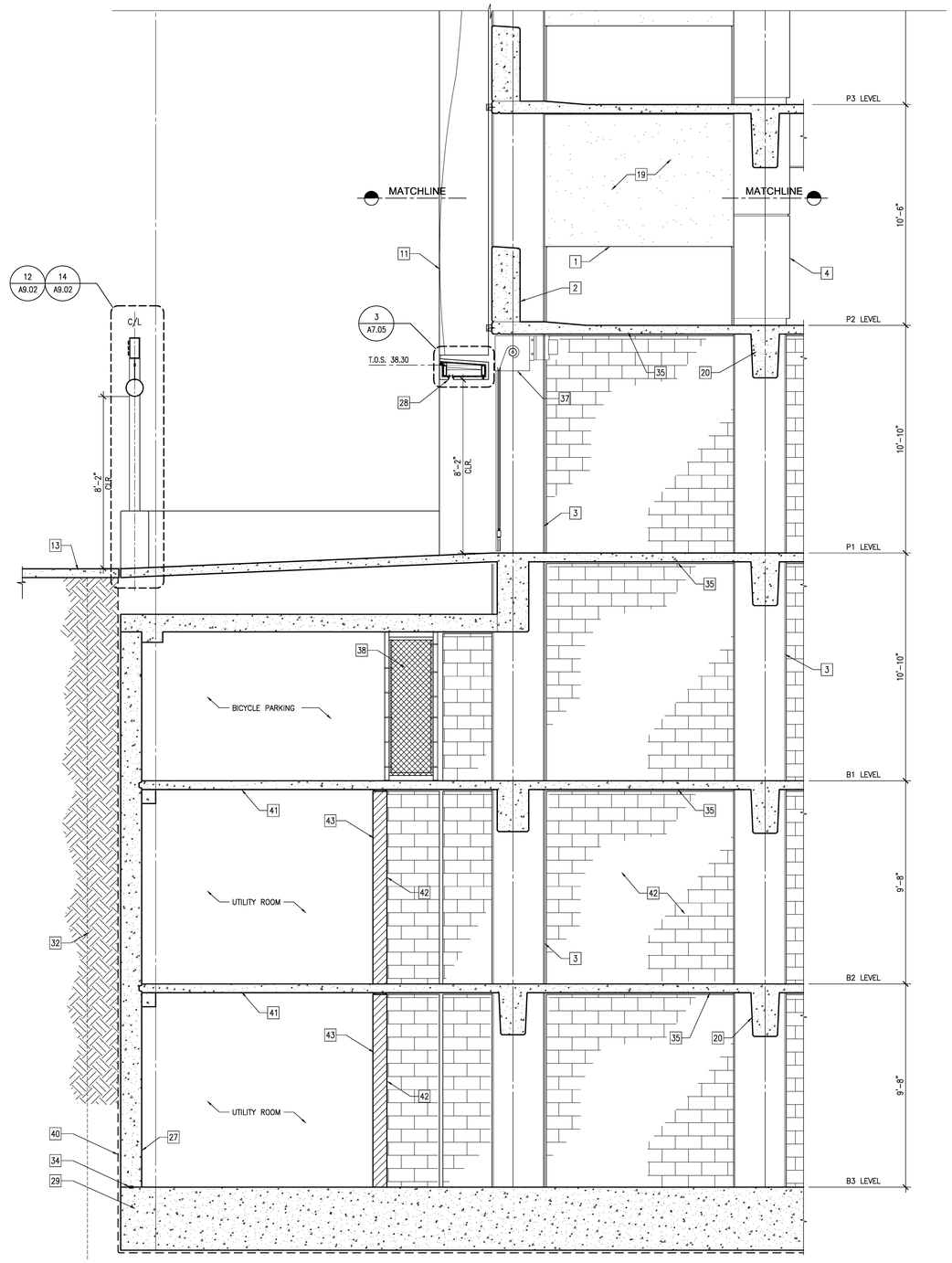


## WALL SECTION

SCALE: 3/8"=1'-0"

1

## KEY NOTES

| | | | | | | | | | | | | | | | | | | | |
|---|---|---|---|---|---|---|---|---|---|---|---|---|---|---|---|---|---|---|---|
| 1 | CONCRETE SPANDREL, PAINTED, (SEE STRUCT. DWGS.) | 6 | STEEL STAIRS, PAINTED | 11 | ANODIZED ALUMINUM FINS SET IN SUPPORT FRAME (DEFERRED APPROVAL) | 16 | ILLUMINATED SIGNAGE | 21 | LIGHT STANDARD, SEE ELECT. DWGS. | 26 | | 31 | CONC. TRANSFER GIRDER, PAINTED (SEE STRUCT. DWGS.) | 36 | 6" HIGH CONCRETE CURB, TYP. | 41 | CONCRETE SLAB, NO PAINT (SEE STRUCT. DWGS.) |
| 2 | CONCRETE UPTURNED BEAM, PAINTED, (SEE STRUCT. DWGS.) | 7 | METAL SCREENED LOUVER, PAINTED (SEE MECHANICAL DWGS.) | 12 | GROUND-FACE CMU BLOCK | 17 | PLASTER CONTROL JOINT, TYP. | 22 | EDGE OF CONCRETE DECK | 27 | RETAINING WALL, NO PAINT (SEE STRUCT. DWGS.) | 32 | SHORING | 37 | OVERHEAD COILING GRILLE | 42 | CMU WALL, PAINTED |
| 3 | CONCRETE COLUMN, PAINTED, (SEE STRUCT. DWGS.) | 8 | ALUMINUM COMPOSITE PANELS OVER METAL STUD FRAMING (DEFERRED APPROVAL) | 13 | FINISH SURFACE (SEE CIVIL DWGS.) | 18 | CONCRETE SHEAR WALL | 23 | EXPOSED STEEL SUPPORT, PAINTED | 28 | PARKING CONTROL (SEE PLANS) | 33 | LINE OF CANOPY | 38 | CHAIN LINK FENCE | 43 | CMU WALL, NO PAINT |
| 4 | ALUMINUM COMPOSITE PANELS OVER CONCRETE — DEFERRED APPROVAL | 9 | STEEL SHADE CANOPY SUPPORTS, PAINTED, (DEFERRED APPROVAL) | 14 | CONCRETE STAIRS ON GRADE | 19 | PORTLAND CEMENT PLASTER OVER METAL STUD FRAMING | 24 | CONCRETE REVEAL, TYP. | 29 | FOOTINGS, SEE STRUCT. | 34 | CONTINUOUS BENTONITE WATERSTOP (TYP.) @ ALL COLD JOINTS | 39 | CLEARANCE BAR | 44 | |
| 5 | SECURITY SCREENING SET IN ALUMINUM STOREFRONT FRAME | 10 | STEEL RAILING, PAINTED | 15 | LINE OF STRUCTURE BELOW GRADE | 20 | CONCRETE DOWNTURNED BEAM, PAINTED, SEE STRUCT. | 25 | CABLE BARRIER, TYP. | 30 | RETAINING WALL BEYOND | 35 | CONCRETE SLAB, PAINTED (SEE STRUCT. DWGS.) | 40 | WATERPROOFING (SEE WATERPROOFING DRAWINGS) | | |

**County of San Diego**
**Cedar & Kettner**
**Development Project**
San Diego, California

McCARTHY

20401 S.W. BIRCH STREET SUITE 300
Newport Beach, California 92660

Architect

IPD

Alameda
Irvine
Los Angeles

Architecture / Engineering / Consulting
www.ipd-global.com

2 Faraday, Suite 101, Irvine CA 92618
Phone 949 595 8004 Fax 949 595 8011

| Revision | Date |
|---|---|
| 100% DESIGN DEVELOPMENT | 10/23/13 |
| 90% CDs - 1ST PLAN CHECK | 12/24/13 |
| 2ND PLAN CHECK | 04/23/14 |

| | |
|---|---|
| Date | |
| IPD Job No. | 13-813 |
| Drawn By | MS |
| Checked By | |
| Scale | 3/32" = 1'-0" |

CONSTRUCTION DOCUMENTS

Drawing Title

WALL SECTIONS

Drawing No.

**A6.09**

IPD, Inc.

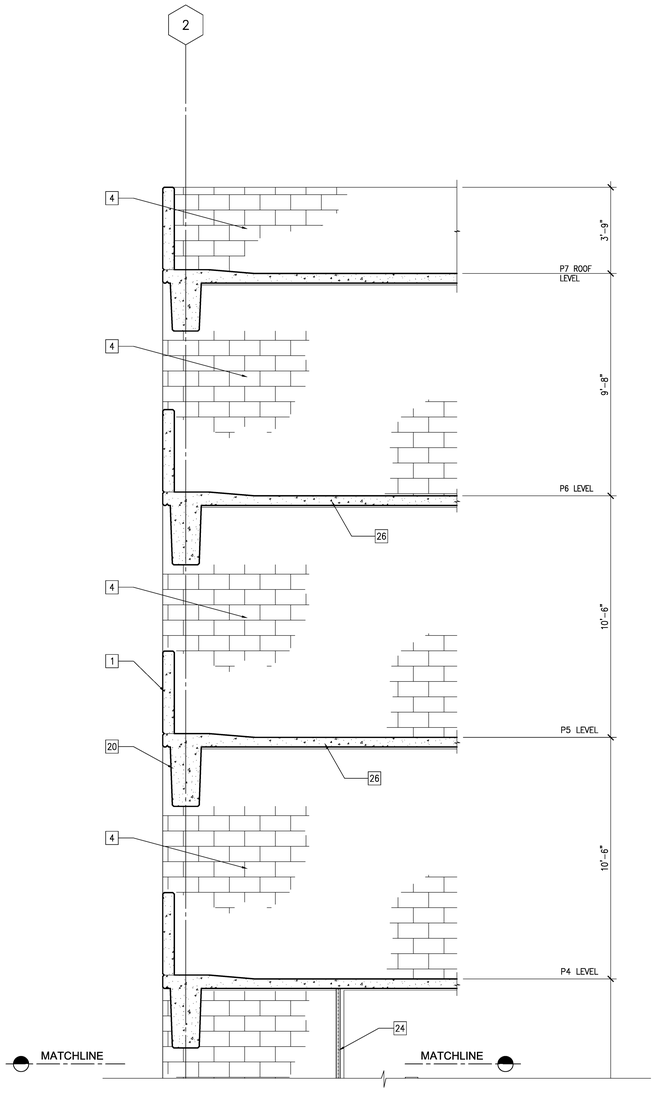


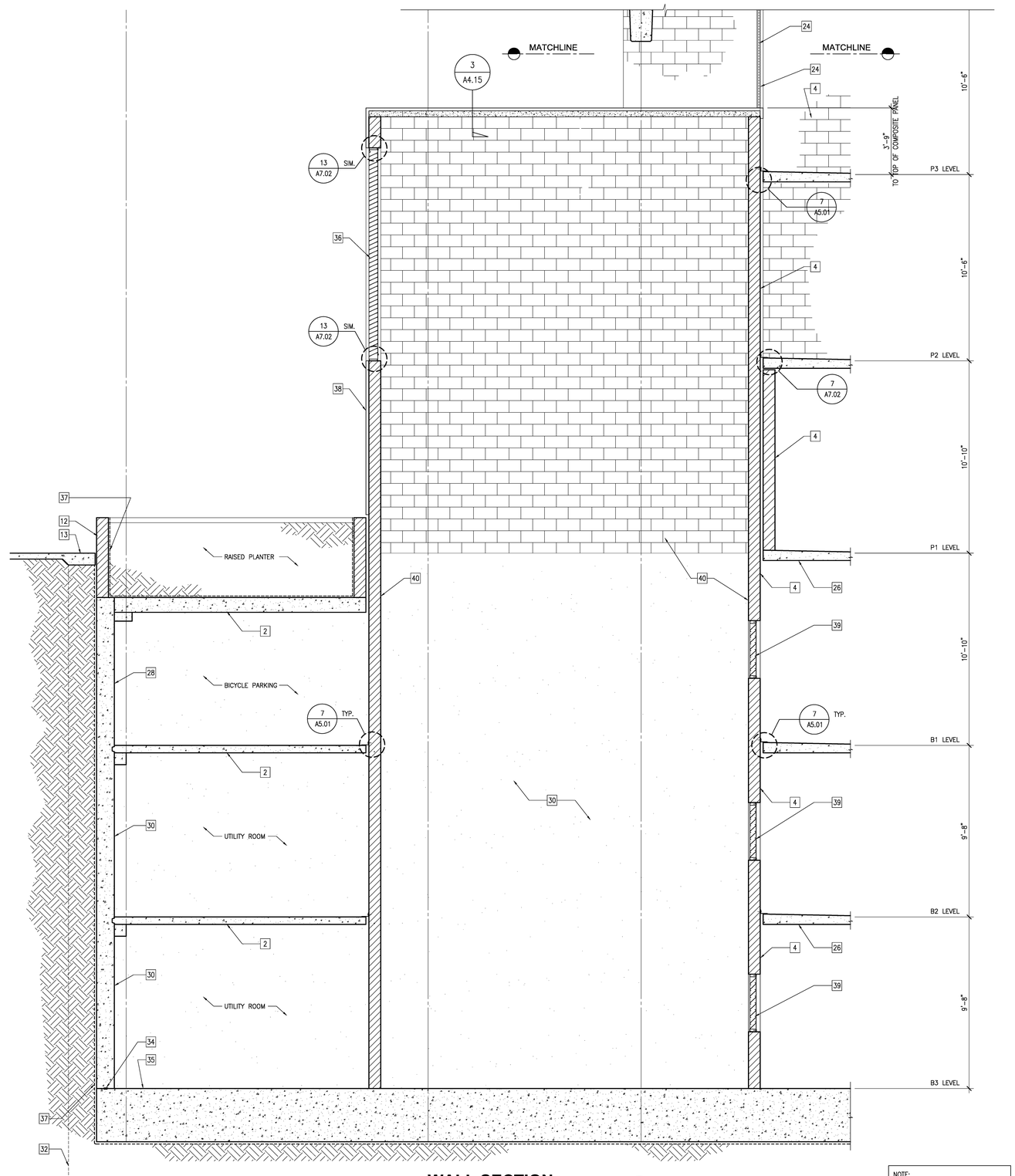


## WALL SECTION

SCALE: 3/8"=1'-0"

1

NOTE:
MANUF.: ARCHITECTURAL LOUVERS
MODEL: EBJN
SIZE: 4'-0" x 12'-0" MIN. (48 SF.)

### KEY NOTES

| | | | | | | | | | | | | | | | | | |
|---|---|---|---|---|---|---|---|---|---|---|---|---|---|---|---|---|---|
| 1 | CONCRETE SPANDREL, PAINTED | 6 | STEEL STAIRS, PAINTED | 11 | ANODIZED ALUMINUM FINS SET IN SUPPORT FRAME | 16 | ILLUMINATED SIGNAGE | 21 | LIGHT STANDARD, SEE ELECT. DWGS. | 26 | CONCRETE DECK, PAINTED | 31 | CONC. TRANSFER GIRDER, PAINTED, SEE STRUCT. DWGS. | 36 | EXTRUDED STATIONARY LOUVERS (SEE NOTE) |
| 2 | CONCRETE DECK, PAINTED | 7 | METAL SCREENED LOUVER, PAINTED (SEE MECHANICAL DWGS.) | 12 | GROUND FACE CMU WALL | 17 | PLASTER CONTROL JOINT, TYP. | 22 | EDGE OF CONCRETE DECK | 27 | RETAINING WALL (SEE STRUCT. DWGS.) | 32 | SHORING | 37 | WATERPROOFING, SEE WATERPROOFING DRAWINGS |
| 3 | CONCRETE COLUMN, PAINTED | 8 | ALUMINUM COMPOSITE PANELS OVER METAL STUD FRAMING – DEFERRED APPROVAL | 13 | FINISH SURFACE (SEE CIVIL DWGS.) | 18 | CONCRETE SHEAR WALL | 23 | EXPOSED STEEL SUPPORT, PAINTED | 28 | CONCRETE RETAINING WALL, PAINTED | 33 | LINE OF CANOPY | 38 | ALUMINUM COMPOSITE PANELS OVER CMU WALL – DEFERRED APPROVAL |
| 4 | CMU WALL, PAINTED | 9 | STEEL SHADE CANOPY SUPPORTS, PAINTED | 14 | CONCRETE STAIRS ON GRADE | 19 | PORTLAND CEMENT PLASTER OVER METAL STUD FRAMING | 24 | GALV. CHAINLINK SCREEN TO UNDER SIDE OF DECK ABOVE | 29 | FOOTINGS, SEE STRUCT. | 34 | CONTINUOUS BENTONITE WATERSTOP (TYP.) @ ALL COLD JOINTS | 39 | SCREENED LOUVERED VENT, SEE MECH. DWGS. |
| 5 | SECURITY SCREENING SET IN ALUMINUM STOREFRONT FRAME | 10 | STEEL RAILING, PAINTED | 15 | LINE OF STRUCTURE BELOW GRADE | 20 | CONCRETE DOWNTURNED BEAM, PAINTED | 25 | CABLE BARRIER, TYP. | 30 | CONCRETE RETAINING WALL, NO PAINT | 35 | CONCRETE SLAB, SEE STRUCT. DWGS. | 40 | CMU WALL, NO PAINT |

**County of San Diego**
**Cedar & Kettner**
**Development Project**
San Diego, California

McCARTHY
20401 S.W. BIRCH STREET SUITE 300
Newport Beach, California 92660

Architect
IPD
Alameda
Irvine
Los Angeles
Architecture / Engineering / Consulting
www.ipd-global.com
2 Faraday, Suite 101, Irvine CA 92618
Phone 949 595 8004 Fax 949 595 8011

| Revision | Date |
|---|---|
| 100% DESIGN DEVELOPMENT | 10/23/13 |
| 90% CDs - 1ST PLAN CHECK | 12/24/13 |
| 2ND PLAN CHECK | 04/23/14 |

| | |
|---|---|
| Date | |
| IPD Job No. | 13-813 |
| Drawn By | MS |
| Checked By | |
| Scale | 3/32" = 1'-0" |

CONSTRUCTION DOCUMENTS

Drawing Title
WALL SECTIONS

Drawing No.
**A6.10**

IPD, Inc.

## NOTES:

1. STAIR STRIPING FOR THE VISUALLY IMPAIRED: THE UPPER APPROACH AND THE LOWER TREAD OF EACH INTERIOR STAIR AND ALL TREADS OF EXTERIOR STAIRS SHALL BE MARKED BY A STRIPE OF CLEARLY CONTRASTING COLOR AT LEAST TWO (2) INCHES WIDE PLACED PARALLEL TO AND NOT MORE THAN ONE(1) INCH FROM THE NOSE OF THE FULL WIDTH OF THE STEP AND/OR LANDING TO ALERT THE VISUALLY IMPAIRED. THE STRIPE SHALL BE OF MATERIAL THAT IS AT LEAST A SLIP RESISTANT AS THE OTHER TREADS OF THE STAIR. A PAINTED STRIPE IS ACCEPTABLE.
2. STAIR & GUARDRAIL POSTS MAX. SPACING: STAIRS=5'-0" O.C. MAX., GUARDRAILS=4'-0" O.C. MAX.
3. DESIGN/BUILD STAIRS (DEFERRED SUBMITTAL)
   STAIR DETAILS SHOWN ON THIS SHEET ARE FOR DESIGN INTENT ONLY. STAIR SUBCONTRACTOR TO FURNISH CALCULATIONS, MEMBER SIZES, WELDING, ETC. AS REQUIRED FOR COMPLETE STAIR DESIGN. TO BE SUBMITTED TO DESIGN TEAM FOR REVIEW AND CITY FOR APPROVAL PRIOR TO INSTALLATION
4. ALL STEEL STAIRS & HANDRAILS TO BE PAINTED, TYP.
5. STAIR TREADS SHALL BE NO LESS THAN 11 INCHES DEEP, MEASURED FROM THE RISER TO RISER. STAIR RISER HEIGHTS SHALL BE 7 INCHES MAXIMUM AND 4 INCHES MINIMUM. ON ANY GIVEN FLIGHT OF STAIRS, ALL STEPS SHALL HAVE UNIFORM RISER HEIGHT AND UNIFORM TREAD WIDTHS.
6. ALL TREADS SURFACES SHALL BE SLIP-RESISTANT. WEATHER EXPOSED STAIRS AND THEIR APPROACHES SHALL BE DESIGNED SO THAT WATER WILL NOT ACCUMULATE ON THE WALKING SURFACES. TREADS SHALL HAVE SMOOTH, ROUNDED, OR BEVELED EXPOSED EDGES.
7. RISERS SHALL BE SOLID AND SHALL BE VERTICAL OR SLOPED FROM THE UNDERSIDE OF THE LEADING EDGE OF THE TREAD ABOVE AT AN ANGLE NOT MORE THAN 30 DEGREES FROM THE VERTICAL. OPEN RISERS ARE NOT PERMITTED. (1133B.4.5.2M FIG. 11B-35(a) AND (b))

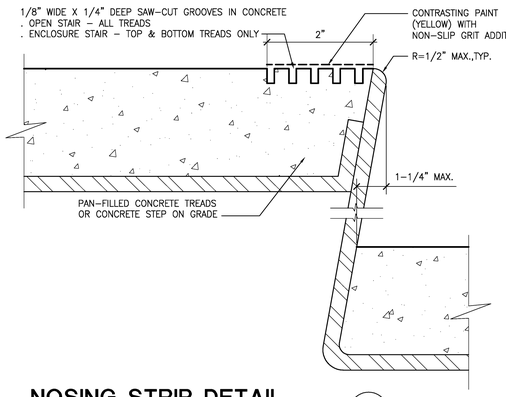


## NOSING STRIP DETAIL (13)
SCALE: 1"=1'-0"

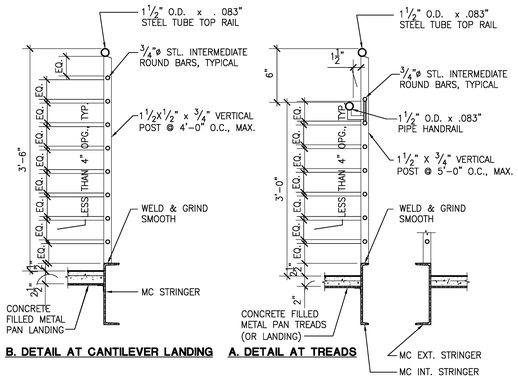


## GUARDRAIL DETAIL (10)
SCALE: 1"=1'-0"

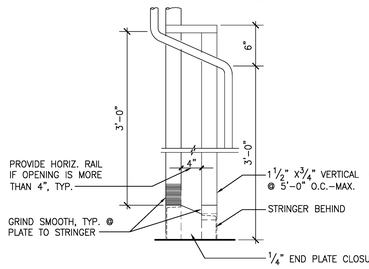


## STRINGER END PLATE ELEV. (9)
SCALE: 1"=1'-0"

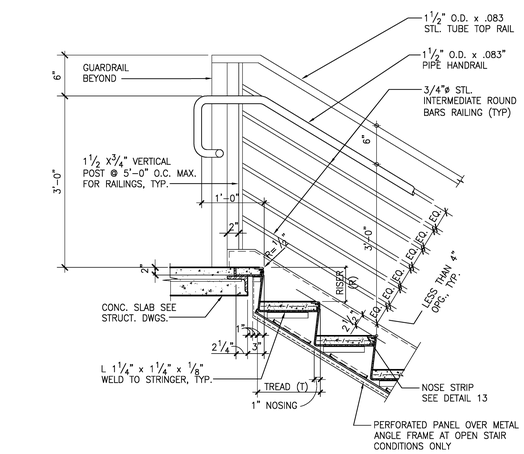


## STAIR DETAIL (6)
SCALE: 1"=1'-0"

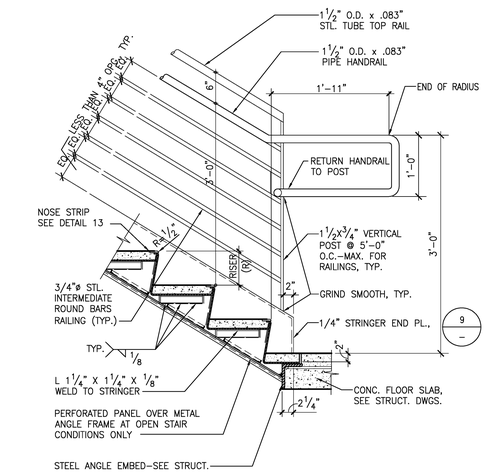


## STAIR DETAIL (@ INTERIOR RAIL-MAIN LANDING) (3)
SCALE: 1"=1'-0"

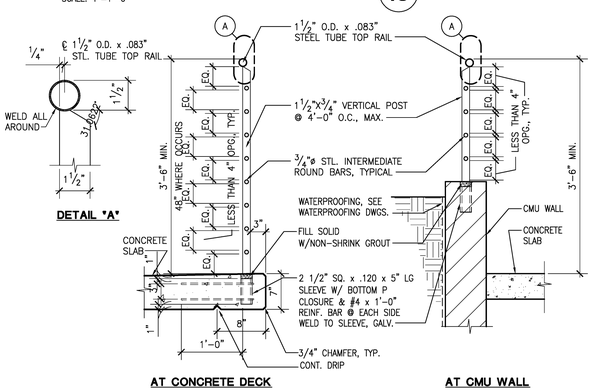


## GUARDRAIL DETAILS (12)
SCALE: 1"=1'-0"

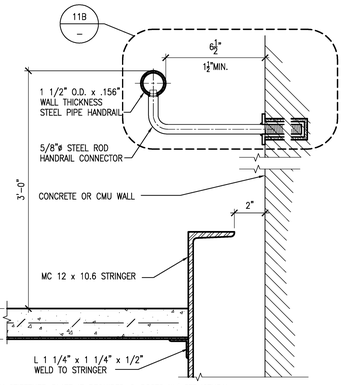


• VERIFY STIFFENER PLATE IF REQUIRED @ POSTS W/ STRUCTURAL.

## HANDRAIL DETAIL (8)
SCALE: 3" = 1'-0"

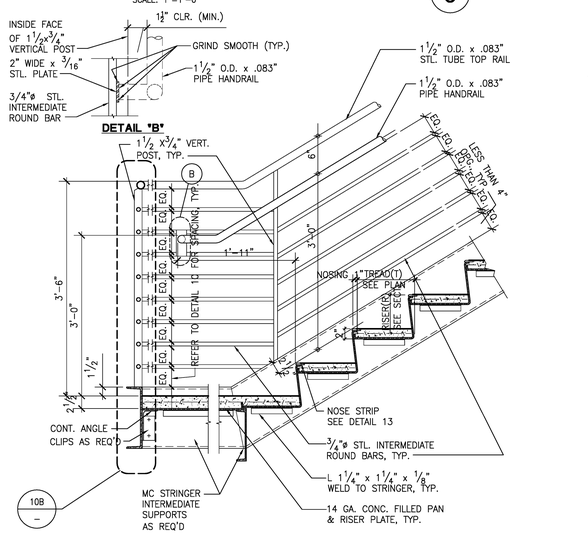


## STAIR DETAIL (@ EXTERIOR RAIL-INTERM. LANDING) (5)
SCALE: 1"=1'-0"

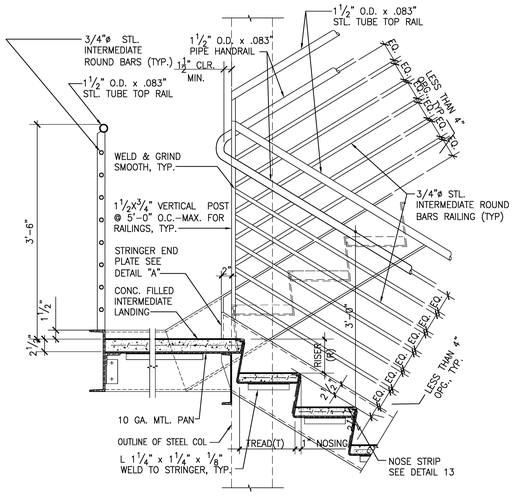


## STAIR DETAIL (@ INTERIOR RAIL-INTERM. LANDING) (2)
SCALE: 1"=1'-0"

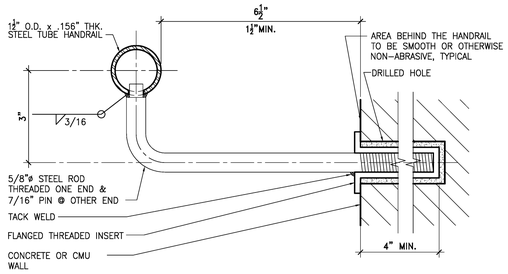


## WALL RAIL CONNECTION AT CONC. / CMU WALL (11B)
SCALE: 6" = 1'-0"

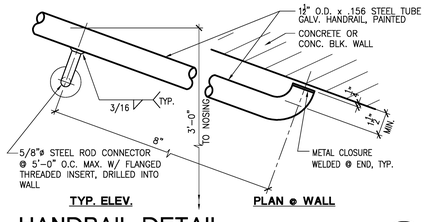


## HANDRAIL DETAIL (11)
SCALE: 3" = 1'-0"

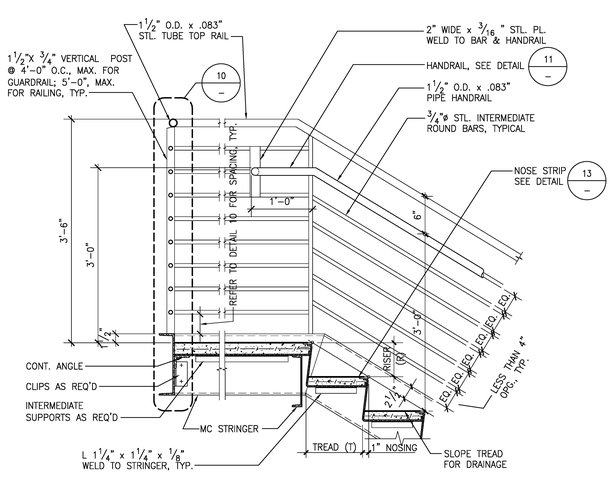


## STAIR DETAIL (@ EXTERIOR RAIL-INTERM. LANDING) (7)
SCALE: 1" = 1'-0"

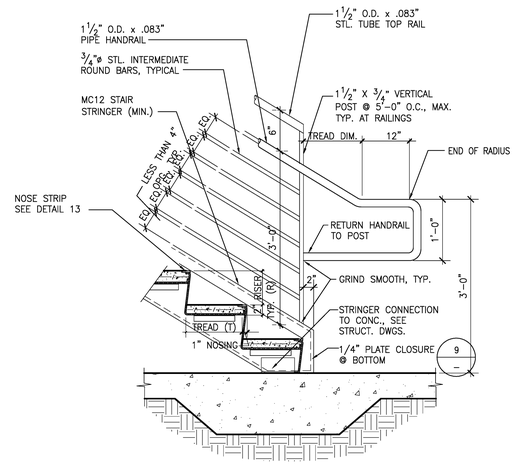


## INTERIOR STAIR AT GRADE (4)
SCALE: 1" = 1'-0"

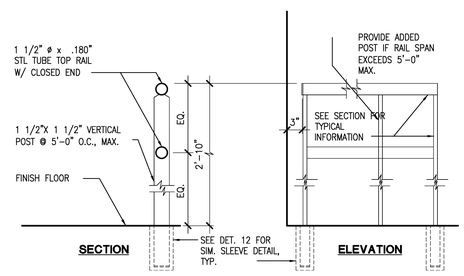


## TYPICAL BARRIER RAIL (1)
SCALE: 1" = 1'-0"

**County of San Diego**
**Cedar & Kettner**
**Development Project**
San Diego, California

McCARTHY
20401 S.W. BIRCH STREET SUITE 300
Newport Beach, California 92660

Architect
IPD
Alameda
Irvine
Los Angeles
Architecture / Engineering / Consulting
www.ipd-global.com
2 Faraday, Suite 101, Irvine CA 92618
Phone 949 595 8004 Fax 949 595 8011

| Revision | Date |
|---|---|
| 100% DESIGN DEVELOPMENT | 10/23/13 |
| 90% CDs - 1ST PLAN CHECK | 12/24/13 |
| 2ND PLAN CHECK | 04/23/14 |

| | |
|---|---|
| Date | |
| IPD Job No. | 13-813 |
| Drawn By | MP |
| Checked By | |
| Scale | AS SHOWN |

CONSTRUCTION DOCUMENTS

Drawing Title
STAIR DETAILS

Drawing No.
**A7.01**

IPD, Inc.

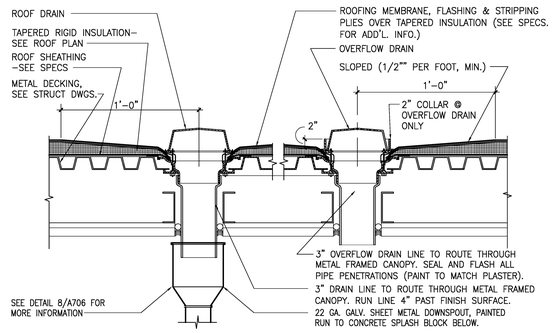


## ROOF DRAIN & OVERFLOW DRAIN

SCALE: N.T.S. — 15

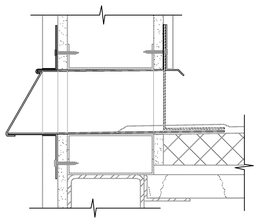

ENLARGED FLASHING DIAGRAM C

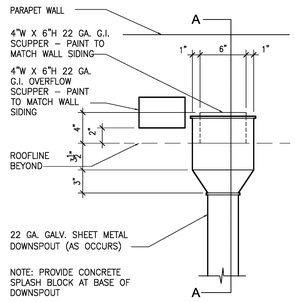


SCUPPER ELEVATION B

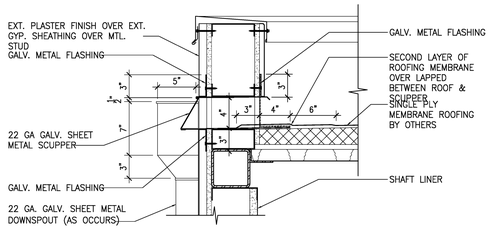


SCUPPER SECTION A

NOTE: FLASH & SEAL ALL WALL PENETRATIONS

## SCUPPER/DOWNSPOUT DETAIL

SCALE: 1 1/2" = 1'–0" — 14

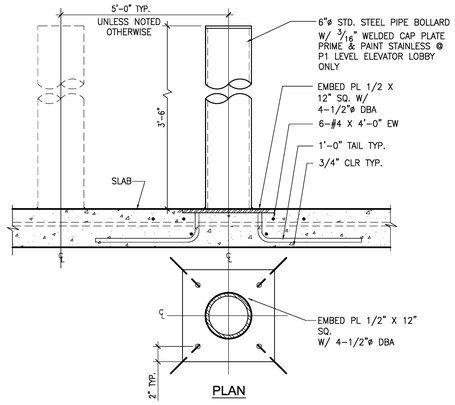


NOTE: BOLLARDS ARE DESIGNED AS VISUAL DETERRENTS ONLY AND ARE NOT TO BE CONSIDERED VEHICLE BARRIERS

## PIPE BOLLARD AT ELEVATED SLAB

SCALE: 1 1/2" = 1'–0" — 11

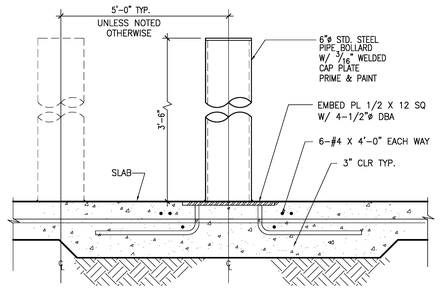


NOTE: BOLLARDS ARE DESIGNED AS VISUAL DETERRENTS ONLY AND ARE NOT TO BE CONSIDERED VEHICLE BARRIERS

## PIPE BOLLARD AT GROUND SLAB

SCALE: 1 1/2" = 1'–0" — 10

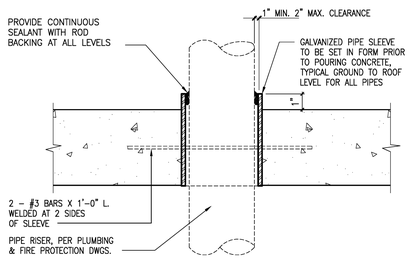


## TYPICAL PIPE SLEEVE DETAIL

SCALE: 3"=1'–0" — 9

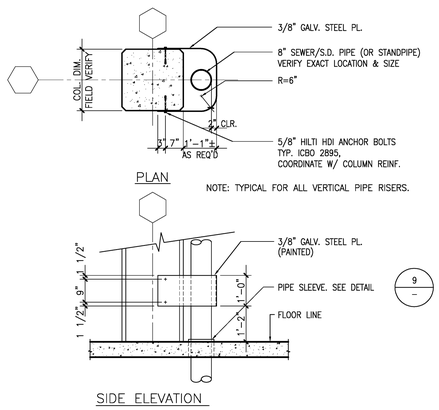


## PIPE GUARD DETAIL

SCALE: 1/2"=1'–0" — 8

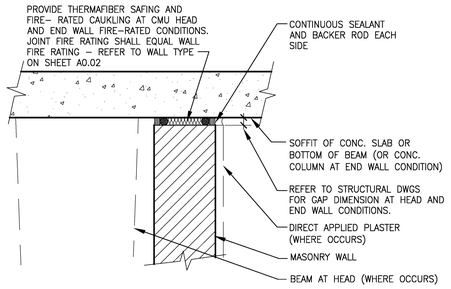


## TOP/END OF CMU WALL DETAIL

SCALE: 1 1/2"=1'–0" — 7

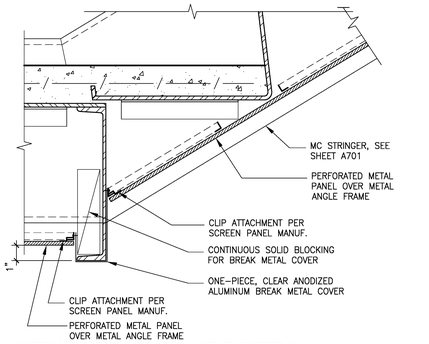


## STRINGER CLOSURE DETAIL

SCALE: 3" = 1'–0" — 3B

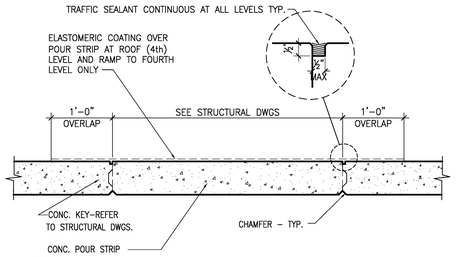


NOTES :
1. JOINT TO BE 1/4" RADIUS TOOLED NEATLY & SLAB SHALL BE GROUND STRAIGHT AND UNIFORM. CLEAN JOINT PRIOR TO CAULKING.
2. PROVIDE MEDIUM BROOM FINISH @ SLAB TO RECEIVE ELASTOMERIC COATING.
3. ALIGN TOP SURFACES OF DECKS & POUR STRIP FILL. NO ABRUPT OFFSETS PERMITTED.

## POUR STRIP

SCALE: 1" = 1'–0" — 6

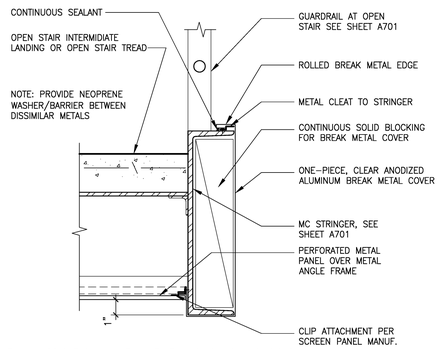


## STRINGER CLOSURE DETAIL

SCALE: 3" = 1'–0" — 3A

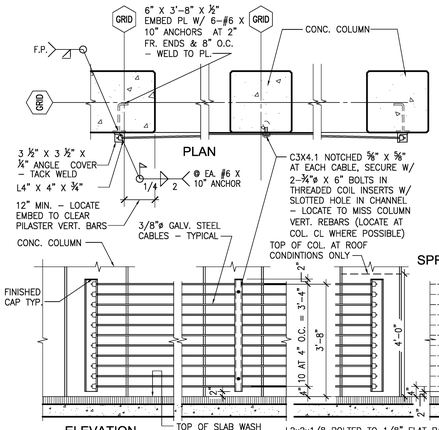


NOTES :
1. GALVANIZE ALL EXPOSED PARTS.
2. STRESS 3/8" 270K GALV. CABLES TO 2.8K MIN. 3.2K MAX.
3. POWER SEAT CABLES TO 20K FROM CABLE SIDE
4. VERIFY LOCATION OF REBAR
5. PROVIDE SPREADERS AT MIDSPAN BETWEEN COLUMNS TO ACHIEVE CONSISTENT CABLE SPACING.
6. DETAIL PROVIDED FOR MIN. BASIS OF DESIGN AND REQUIRED HEIGHT INFORMATION. SEE SPECS.
7. EASE ALL SHARP EDGES

## CABLE RAILING DETAIL

SCALE: 1/2" = 1'–0" — 5

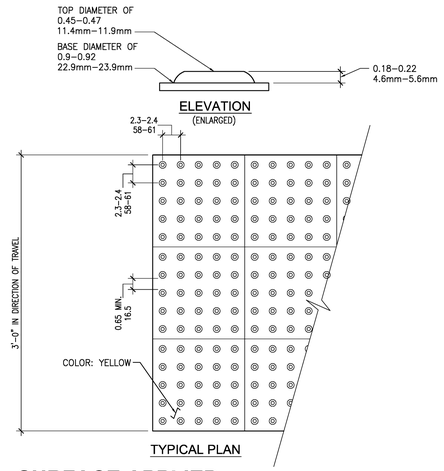


## SURFACE APPLIED DETECTABLE WARNING STRIP

SCALE: 1 1/2" = 1'–0" — 2

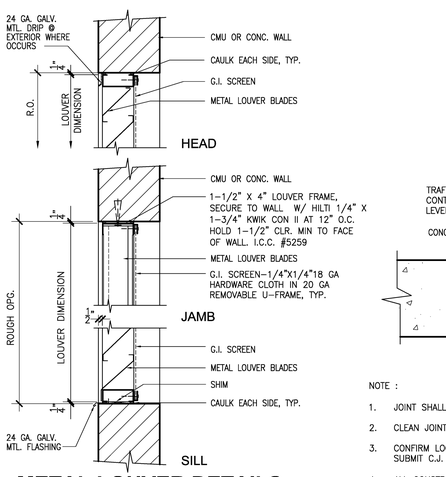


## METAL LOUVER DETAILS AT CMU WALL

SCALE: 1 1/2" = 1'–0" — 13

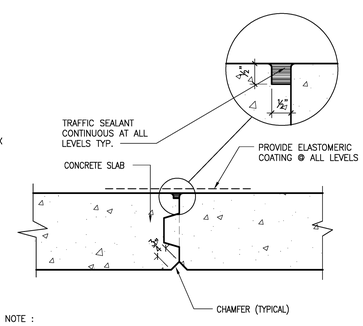


NOTE :
1. JOINT SHALL BE 1/4" RADIUS TOOLED NEATLY, & SHALL BE GROUND STRAIGHT AND UNIFORM.
2. CLEAN JOINT PRIOR TO CAULKING.
3. CONFIRM LOCATIONS OF CONSTRUCTION JOINTS WITH STRUCTURAL ENGINEER. CONTRACTOR TO SUBMIT C.J. LAYOUT FOR REVIEW BY ARCHITECT AND STRUCTURAL ENGINEER OF RECORD.
4. ALL CONSTRUCTION JOINTS RECEIVE THE TREATMENT SHOWN IN THIS DETAIL (ALL LEVELS)

## CONST. JOINT DETAIL

SCALE: 3" = 1'–0" — 12

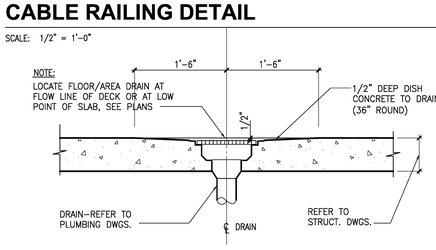


NOTES:
1. FOR GRATINGS LOCATED IN THE SURFACE OF ANY PEDESTRIAN WAY IN THE PATH OF TRAVEL, GRID/OPENINGS IN GRATINGS SHALL BE LIMITED TO 1/2" MAXIMUM IN THE DIRECTION OF TRAFFIC FLOW. IF SUCH CONDITION OCCURS, PROVIDE MANUFACTURERS CUT–SHEETS REVIEW.

## FLOOR/AREA DRAIN DETAIL

SCALE: 1" = 1'–0" — 4

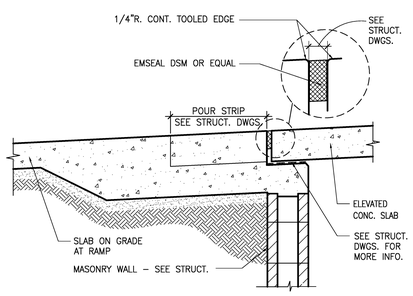


NOTE :
1. REFER TO STRUCTURAL DWGS. FOR ADD'L INFORMATION.

## SEPARATION JOINT DETAIL

SCALE: 1" = 1'–0" — 1

**County of San Diego Cedar & Kettner Development Project**
San Diego, California

McCARTHY
20401 S.W. BIRCH STREET SUITE 300
Newport Beach, California 92660

Architect
IPD
Alameda
Irvine
Los Angeles
Architecture / Engineering / Consulting
www.ipd-global.com
2 Faraday, Suite 101, Irvine CA 92618
Phone 949 595 8004 Fax 949 595 8011

| Revision | Date |
|---|---|
| 100% DESIGN DEVELOPMENT | 10/23/13 |
| 90% CDs - 1ST PLAN CHECK | 12/24/13 |
| 2ND PLAN CHECK | 04/23/14 |

| | |
|---|---|
| Date | |
| IPD Job No. | 13-813 |
| Drawn By | MS |
| Checked By | |
| Scale | AS SHOWN |

CONSTRUCTION DOCUMENTS

Drawing Title
DETAILS

Drawing No.
**A7.02**

IPD, Inc.

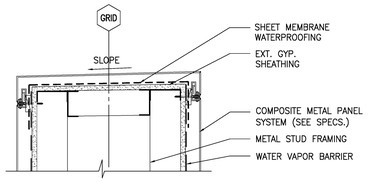


## METAL STUDS FRAMING DETAIL (11)

SCALE: 1 1/2"=1'-0"

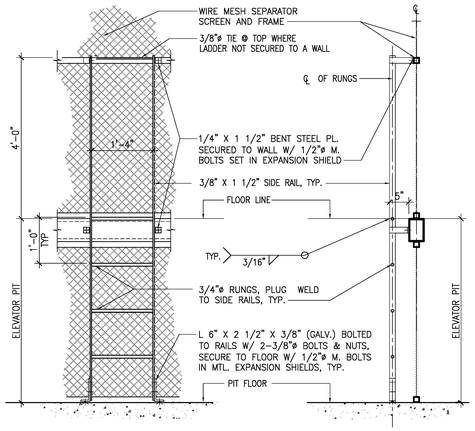


## ELEVATOR PIT LADDER DETAIL (8)

SCALE: 3/4" = 1'-0"

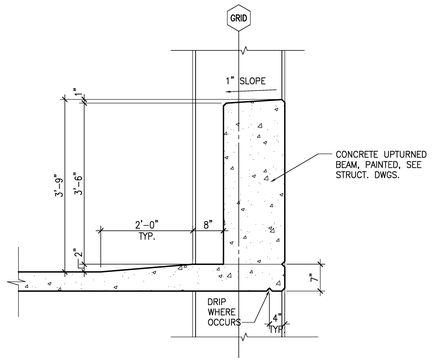


## TYPICAL UPTURNED BEAM (4)

SCALE: 3/4"=1'-0"

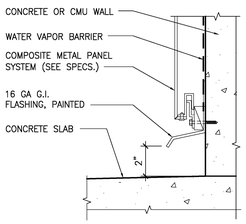


## FLASHING DETAIL (14)

SCALE: 3"=1'-0"

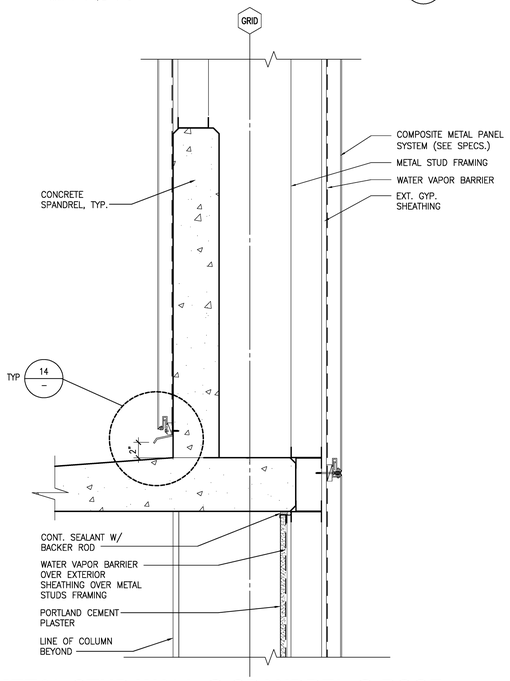


## METAL STUD WALL @ SPANDREL @ ROOF (10)

SCALE: 1 1/2" = 1'-0"

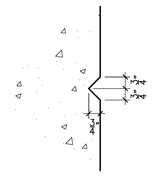


## TYPICAL CONCRETE REVEAL DETAIL (7)

SCALE: 3"=1'-0"

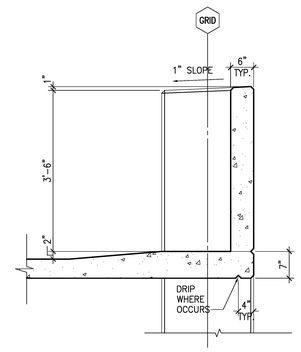


## ROOF LEVEL SPANDREL (3)

SCALE: 3/4"=1'-0"

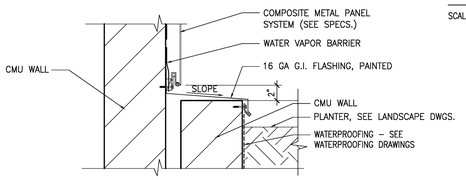


## FLASHING DETAIL (13)

SCALE: 1 1/2"=1'-0"

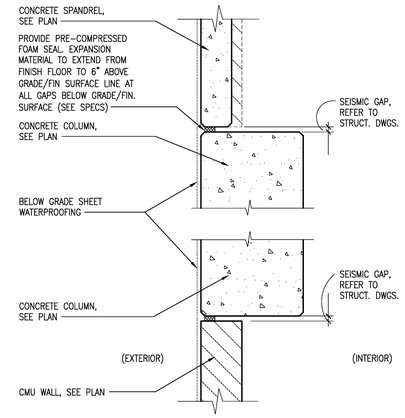


## WATERPROOFING @ CMU & SPANDREL GAP (6)

SCALE: 1" = 1'-0"

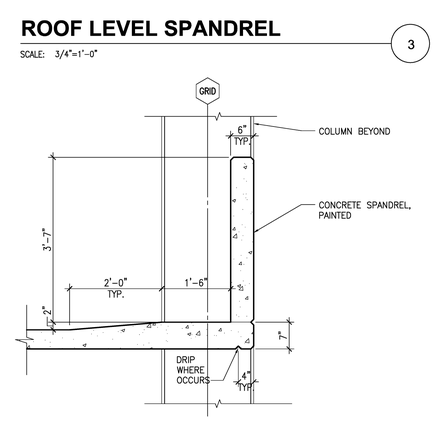


## TYPICAL SPANDREL (2)

SCALE: 3/4"=1'-0"

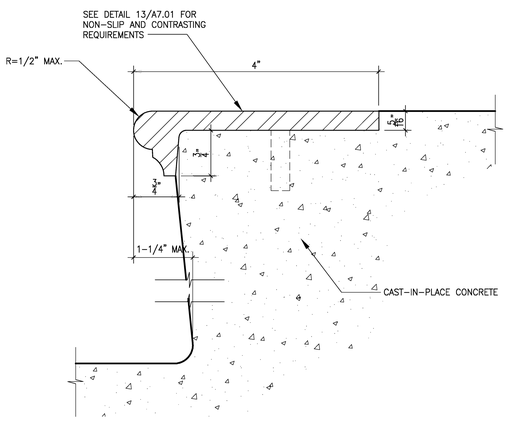


NOTE: WOOSTER PRODUCT INC., TYPE 103

## STAIR NOSING DETAIL (12)

SCALE: FULL

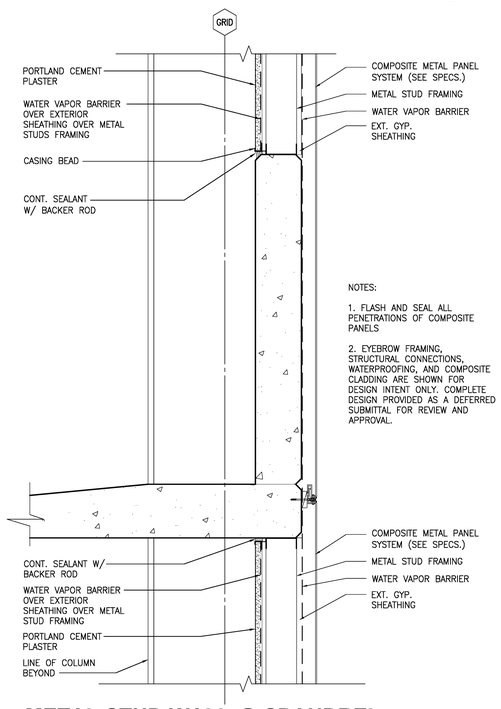


NOTES:

1. FLASH AND SEAL ALL PENETRATIONS OF COMPOSITE PANELS

2. EYEBROW FRAMING, STRUCTURAL CONNECTIONS, WATERPROOFING, AND COMPOSITE CLADDING ARE SHOWN FOR DESIGN INTENT ONLY. COMPLETE DESIGN PROVIDED AS A DEFERRED SUBMITTAL FOR REVIEW AND APPROVAL.

## METAL STUD WALL @ SPANDREL (9)

SCALE: 1 1/2" = 1'-0"

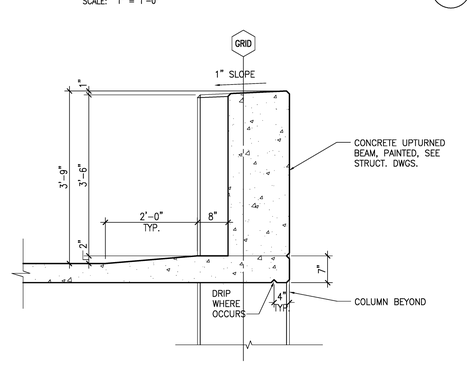


## ROOF LEVEL UPTURNED BEAM (5)

SCALE: 3/4"=1'-0"

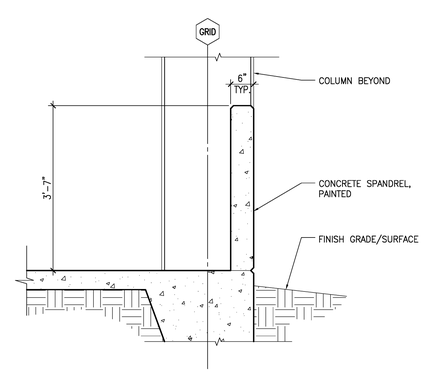


## TYPICAL SPANDREL (1)

SCALE: 3/4"=1'-0"

**County of San Diego**
**Cedar & Kettner**
**Development Project**
San Diego, California

McCARTHY
20401 S.W. BIRCH STREET SUITE 300
Newport Beach, California 92660

Architect
IPD
Alameda
Irvine
Los Angeles
Architecture / Engineering / Consulting
www.ipd-global.com
2 Faraday, Suite 101, Irvine CA 92618
Phone 949 595 8004 Fax 949 595 8011

| Revision | Date |
|---|---|
| 100% DESIGN DEVELOPMENT | 10/23/13 |
| 90% CDs - 1ST PLAN CHECK | 12/24/13 |
| 2ND PLAN CHECK | 04/23/14 |

| | |
|---|---|
| Date | |
| IPD Job No. | 13-813 |
| Drawn By | MS |
| Checked By | |
| Scale | 3/32" = 1'-0" |

CONSTRUCTION DOCUMENTS

Drawing Title
DETAILS

Drawing No.
**A7.03**

IPD, Inc.

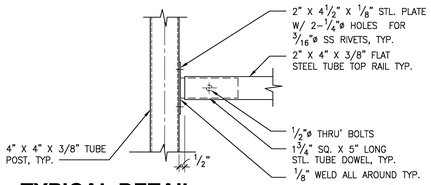


## TYPICAL DETAIL (16)

SCALE: 1 1/2"=1'-0"

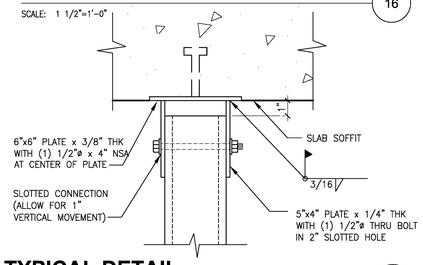


## TYPICAL DETAIL (15)

SCALE: NOT TO SCALE

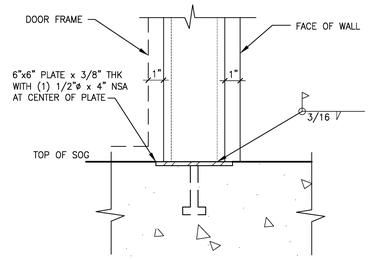


## B - BOTTOM RAIL
## TYPICAL DETAIL (14)

SCALE: NOT TO SCALE

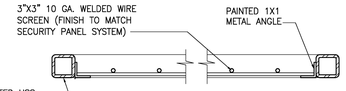


## DETAIL C

SCALE: 3"=1'-0"

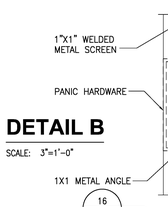


## DETAIL B

SCALE: 3"=1'-0"

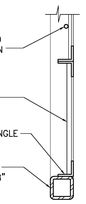


## DETAIL A

SCALE: 3"=1'-0"

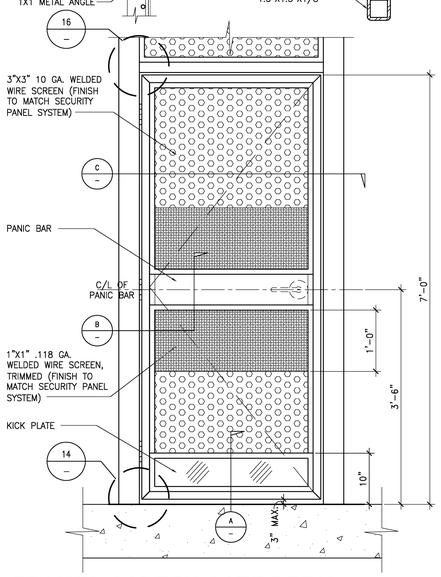


## FRAMED SCREEN GATE DETAIL (13)

SCALE: 1" = 1'-0"

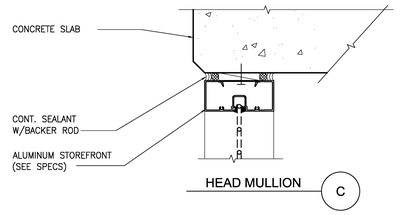


HEAD MULLION (C)

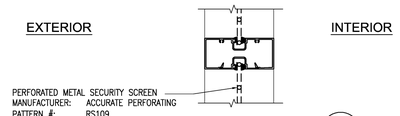


HORIZONTAL MULLION (B)

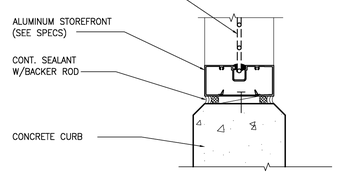


SILL MULLION (A)

## STOREFRONT DETAIL (SECURITY SCREEN) (12)

SCALE: 3"=1'-0"

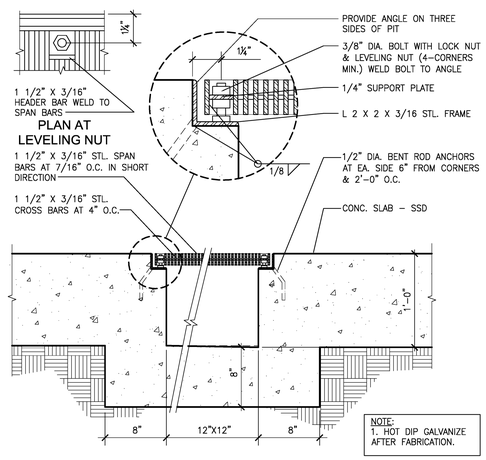


## SUM PIT DETAIL (11)

SCALE: 1 1/2" = 1'-0"

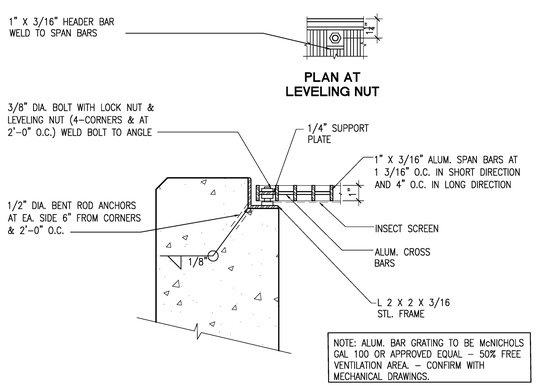


## SHAFT GRATING DETAIL (10)

SCALE: 3"=1'-0"

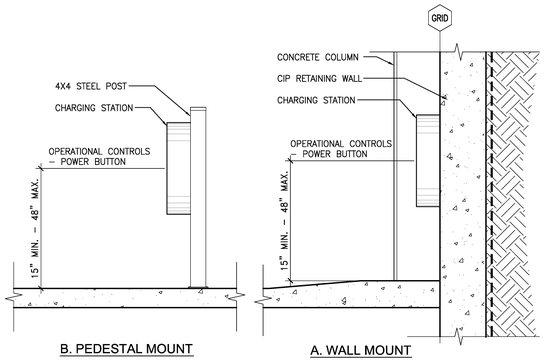


B. PEDESTAL MOUNT — A. WALL MOUNT

## ACCESSIBLE CHARGING STATION (9)

SCALE: 3/4"=1'-0"

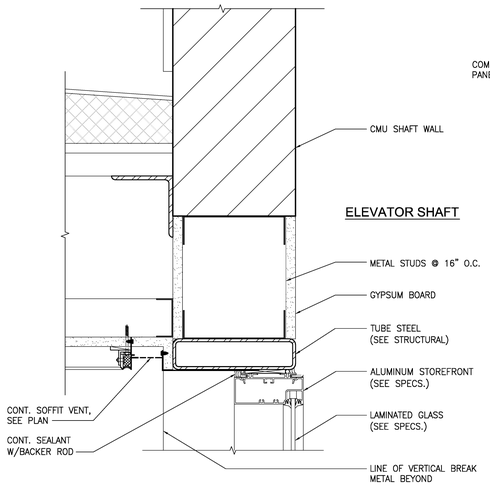


## STOREFRONT DETAIL (HEAD) (8)

SCALE: 3"=1'-0"

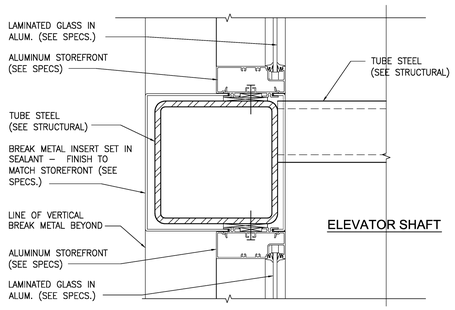


HORIZONTAL MULLION

## STOREFRONT DETAIL (MULLION) (7)

SCALE: 3"=1'-0"

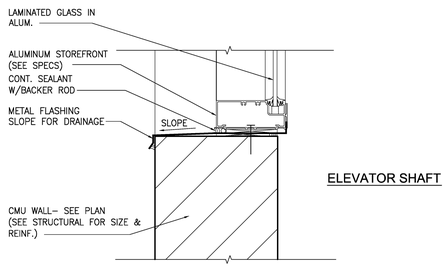


MULLION SILL AT GROUND LEVEL

## STOREFRONT DETAIL (SILL) (6)

SCALE: 3"=1'-0"

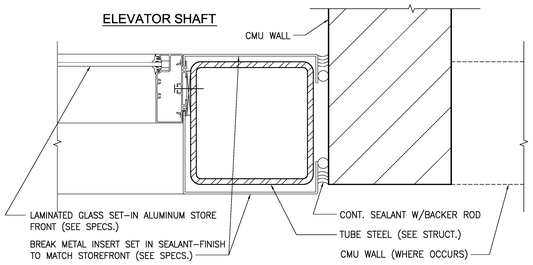


## STOREFRONT DETAIL (JAMB) (5)

SCALE: 3"=1'-0"

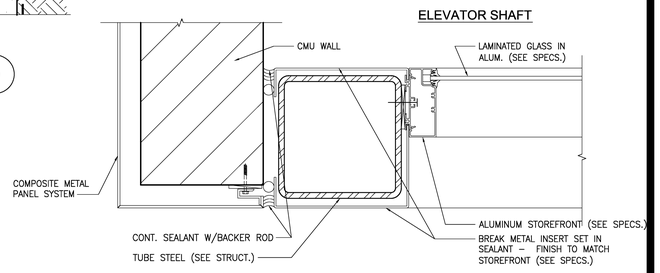


## STOREFRONT DETAIL (JAMB) (4)

SCALE: 3"=1'-0"

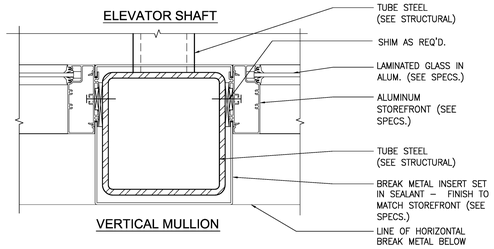


## STOREFRONT DETAIL (JAMB) (3)

SCALE: 3"=1'-0"

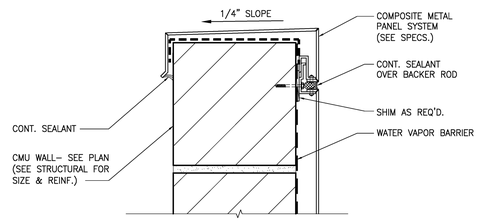


## PARAPET DETAIL (2)

SCALE: 3"=1'-0"

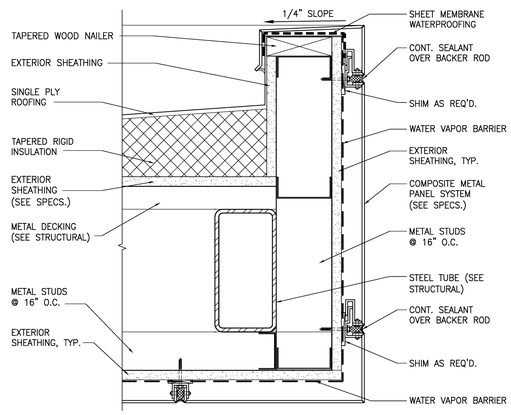


## ELEVATOR / STAIR CANOPY SECTION DETAIL (1)

SCALE: 3"=1'-0"

**County of San Diego**
**Cedar & Kettner**
**Development Project**
San Diego, California

McCARTHY
20401 S.W. BIRCH STREET SUITE 300
Newport Beach, California 92660

Architect
IPD
Alameda
Irvine
Los Angeles
Architecture / Engineering / Consulting
www.ipd-global.com
2 Faraday, Suite 101, Irvine CA 92618
Phone 949 595 8004 Fax 949 595 8011

| Revision | Date |
|---|---|
| 100% DESIGN DEVELOPMENT | 10/23/13 |
| 90% CDs - 1ST PLAN CHECK | 12/24/13 |
| 2ND PLAN CHECK | 04/23/14 |

| | |
|---|---|
| Date | |
| IPD Job No. | 13-813 |
| Drawn By | MP |
| Checked By | |
| Scale | AS NOTED |

CONSTRUCTION DOCUMENTS

Drawing Title
DETAILS

Drawing No.
**A7.04**

IPD, Inc.

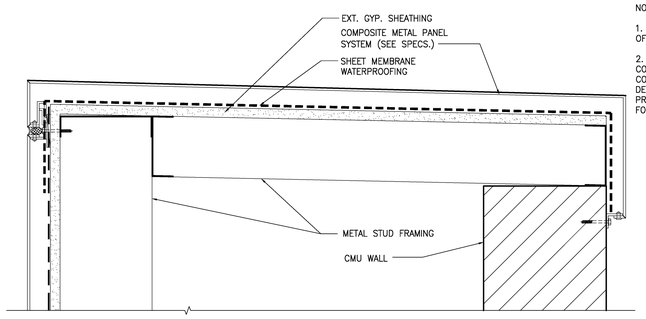


## DETAIL

SCALE: 3"=1'-0" (10)

NOTES:

1. FLASH AND SEAL ALL PENETRATIONS OF COMPOSITE PANELS

2. EYEBROW FRAMING, STRUCTURAL CONNECTIONS, WATERPROOFING, AND COMPOSITE CLADDING ARE SHOWN FOR DESIGN INTENT ONLY. COMPLETE DESIGN PROVIDED AS A DEFERRED SUBMITTAL FOR REVIEW AND APPROVAL.

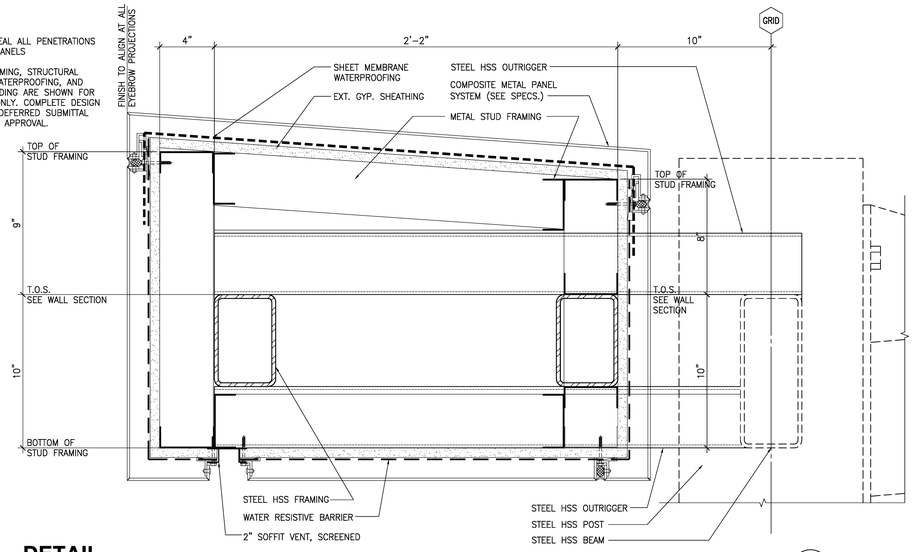


## DETAIL

SCALE: 3"=1'-0" (6)

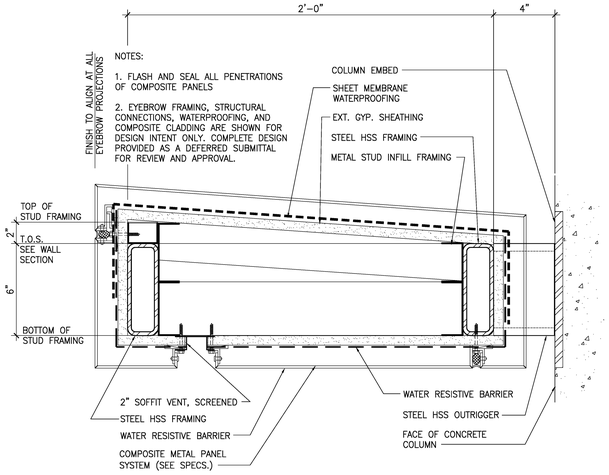


## DETAIL

SCALE: 3"=1'-0" (3)

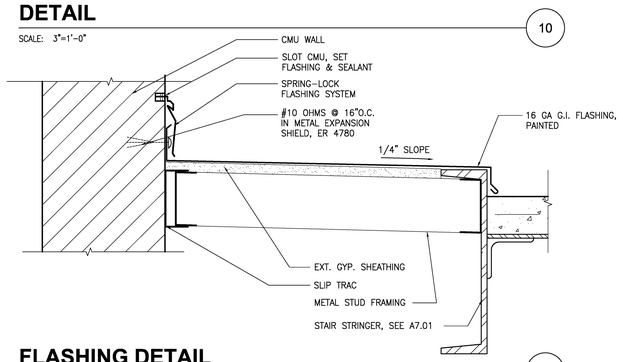


## FLASHING DETAIL

SCALE: 3"=1'-0" (9)

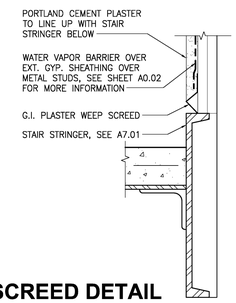


## SCREED DETAIL

SCALE: 3"=1'-0" (8)

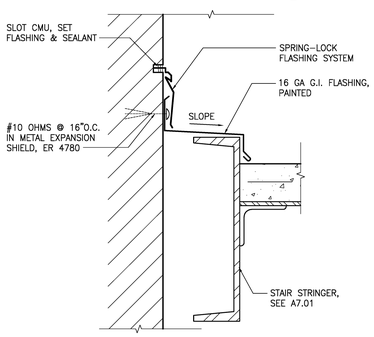


## FLASHING DETAIL

SCALE: 3"=1'-0" (7)

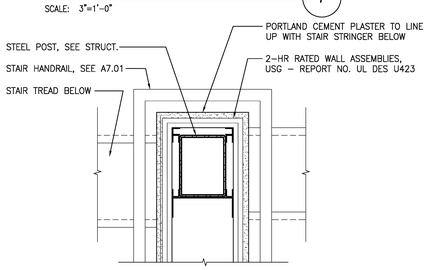


## 2-HOUR RATED ASSEMBLIES AT STAIR

SCALE: 1 1/2"=1'-0" (5)

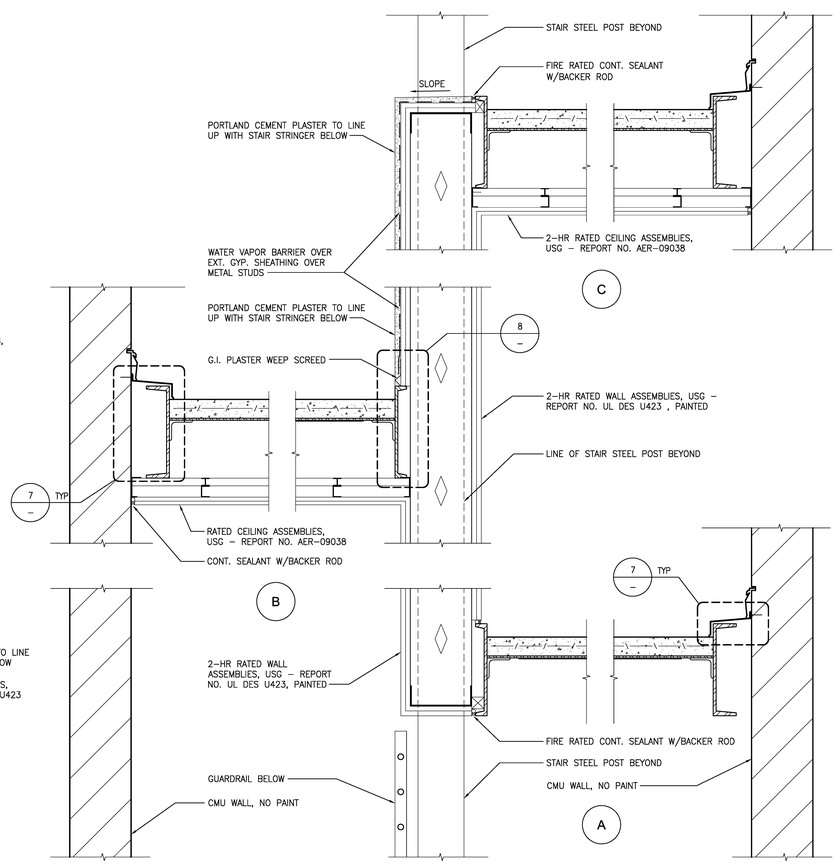


NOTE: SEE SHEET A0.02 FOR MORE INFORMATION

## 2-HOUR RATED ASSEMBLIES AT STAIR

SCALE: 1 1/2"=1'-0" (4)

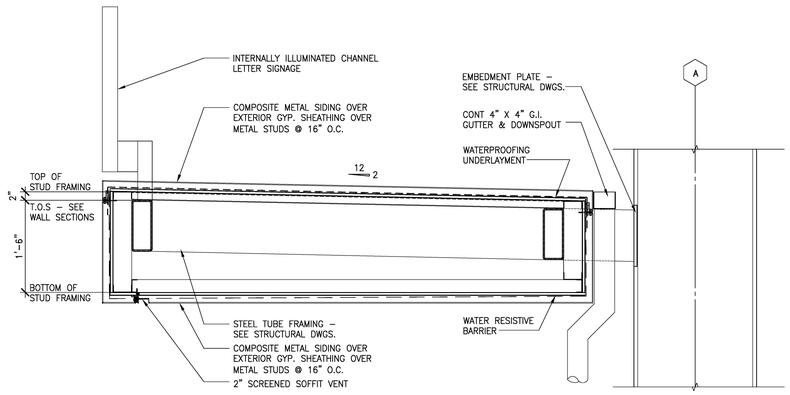


## DETAIL AT PEDESTRIAN CANOPY

SCALE: 1"=1'-0" (2)

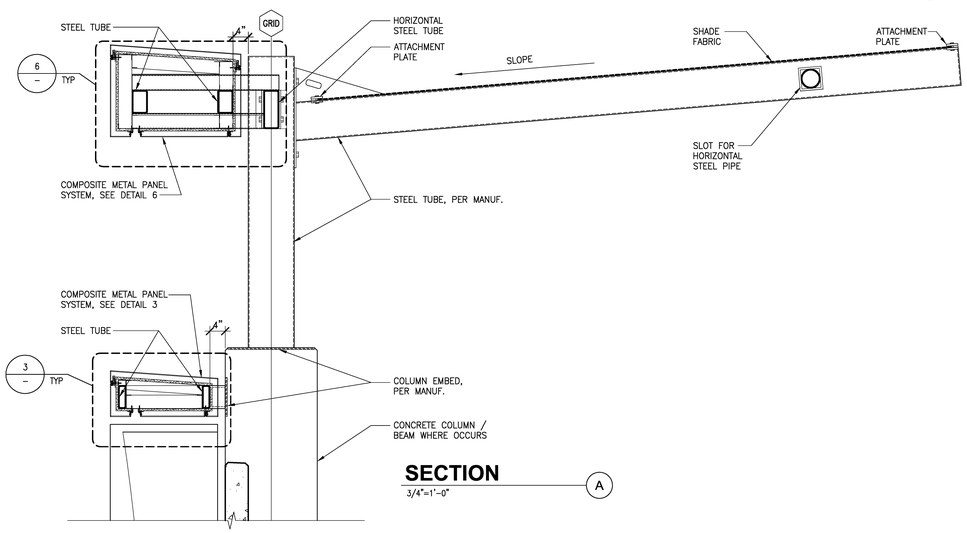


## SECTION

3/4"=1'-0" (A)

## FABRIC SHADE SYSTEM DETAIL

SCALE: 3/4"=1'-0" (1)

**County of San Diego Cedar & Kettner Development Project**
San Diego, California

McCARTHY
20401 S.W. BIRCH STREET SUITE 300
Newport Beach, California 92660

Architect
IPD
Alameda
Irvine
Los Angeles
Architecture / Engineering / Consulting
www.ipd-global.com
2 Faraday, Suite 101, Irvine CA 92618
Phone 949 595 8004 Fax 949 595 8011

| Revision | Date |
|---|---|
| 100% DESIGN DEVELOPMENT | 10/23/13 |
| 90% CDs - 1ST PLAN CHECK | 12/24/13 |
| 2ND PLAN CHECK | 04/23/14 |

| | |
|---|---|
| Date | |
| IPD Job No. | 13-813 |
| Drawn By | MP |
| Checked By | |
| Scale | AS NOTED |

CONSTRUCTION DOCUMENTS

Drawing Title
DETAILS

Drawing No.
**A7.05**

IPD, Inc.

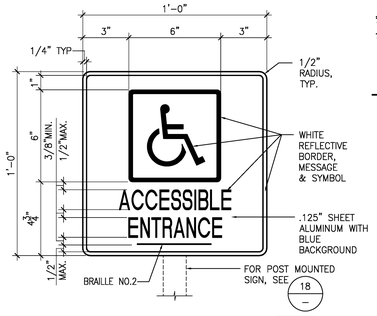


## SIGN DETAIL S-16 (19)

SCALE: 3"=1'-0"

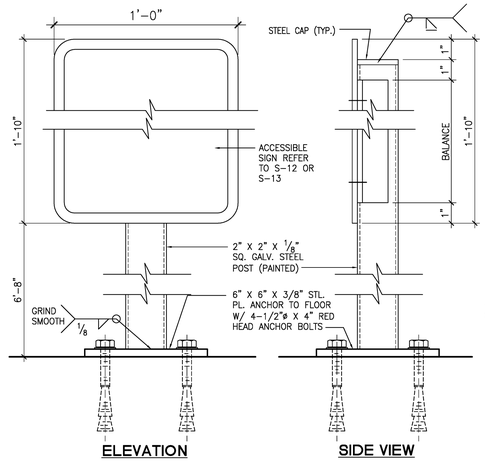


## POST MOUNTED ACCESSIBLE SIGN AT SLAB ON GRADE (18)

SCALE: 3"=1'-0"

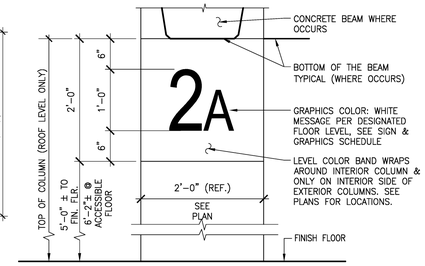


## COLUMN GRAPHIC DETAIL (6)

SCALE: 1" = 1'-0"

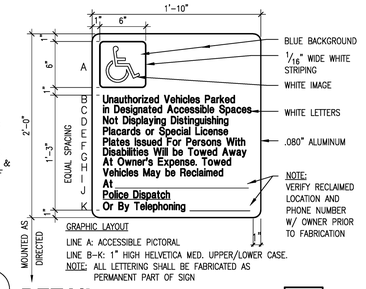


## DETAIL S-5 (5)

SCALE : 1 1/2" = 1'-0"

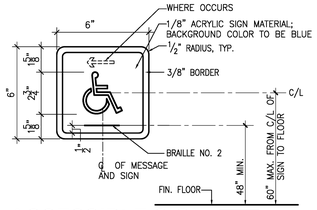


## ACCESSIBLE SIGN S-15 (13)

SCALE: 3"=1'-0"

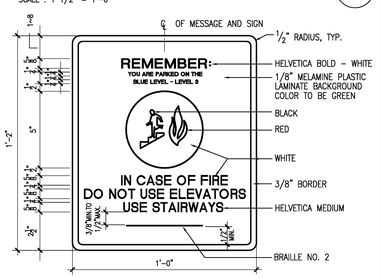


NOTE:
- SIGN TO BE PLACED DIRECTLY ABOVE ELEVATOR PUSH BUTTON COVER PLATE AS DIRECTED BY ARCHITECT.
- LEVEL NUMBERS & COLORS SHALL BE COORDINATED W/ EACH RESPECTIVE LEVEL & INTERIOR COLOR CODING SCHEDULE.
- PROVIDE 1/32" RAISED LETTERING AND BORDER

## SIGN DETAIL S-4 (4)

SCALE: 3"=1'-0"

## SIGN AND GRAPHICS SCHEDULE

| SIGN DESIGNATION | MESSAGE | MOUNTING DTL. REF. | DETAIL REFERENCE | MATERIAL TYPE | SIZE H x W | MOUNT | TYPE FACE | COLOR | REMARKS |
|---|---|---|---|---|---|---|---|---|---|
| S-1 (A/B) | STAIR INFORMATION SIGN | | 1&16 / – | | 1'-3" x 1'-3" | SM | | | SURFACE MOUNTED |
| S-2 | SAMPLE ROOM NAMES (SEE REMARKS) | | 2 / – | | 5" x 1'-0" | SM | | | FOR ROOM NAMES SEE PLANS |
| S-3 | WARNING..... | | 3 / – | | 1'-2" x 1'-6" | SM | | | SURFACE MOUNTED |
| S-4 | REMEMBER ... | | 4 / – | | 1'-2" x 1'-0" | SM | | | SURFACE MOUNTED |
| S-5 | UNAUTHORIZED VEHICLE ..... | | 5 / – | | 2'-0" x 1'-10" | SM | | | SURFACE MOUNTED |
| S-6 | NOT USED | | | | | | | | |
| S-7 | EXIT | | 7 / – | AL | 6" x 6" | SM | HM | | |
| S-8 | ↑ Exit ↑ | | 8 / – | FB | 1'-0" x 12'-0" | C-BR-H | HM | W/GR | |
| S-9 | ✱ Do Not Enter ✱ | | 8 / – | MP | 1'-0" x 12'-0" | C-BR-H | HM | | |
| S-10 | ↑ ♿ Park → | 17 | 9 / – | FB | 1'-3" x 10'-0" | C-CA-H | HM | W/GR | |
| S-11 | ← Park | 17 | 10 / – | FB | 1'-3" x 5'-0" | C-CA-H | HM | W/GR | |
| S-12 | ACCESSIBLE SIGN | 18 | 11 / – | AL | 1'-10" x 1'-0" | | | W/B | |
| S-13 | ACCESSIBLE SIGN (VAN) | 18 | 12 / – | AL | 2'-7" x 1'-0" | | | W/B | |
| S-14 | 7'-0" CLEARANCE | 17 | 16 / – | PVC | 6"ø x 12'-0" | C-CA-H | HM | W/Y/BL | |
| S-15 | ACCESSIBLE SIGN (PEDESTRIAN) | | 13 / – | AL | 6" x 6" | SM | HM | | |
| S-16 | ACCESSIBLE SIGN (PEDESTRIAN) | | 19 / – | AL | 6" x 6" | SM | HM | | |
| PG-1 | ACCESSIBLE FLOOR SYMBOL | | 5 / A8.02 | P | 3'-0" x 3'-0" | SM | | W/B | SURFACE MOUNTED |
| PG-2 | PAINTED DIRECTIONAL FLOW ARROWS ← | | 8 / A8.02 | P | 1'-3" x 5'-0" | SM | | Y/BL | SURFACE MOUNTED |

LEGEND:

S-1 → INDICATES SIGN DESIGNATION

MATERIAL TYPES

MP – METAL PAINTED
FB – FIBERBOARD
AL – ALUMINUM
V – VINYL
P – PAINT
A – ACRYLIC

MOUNT

C-H CEILING HUNG
SM SURFACE MOUNTED
G-PM GROUND POST MOUNT
C-CA-H CABLE HUNG
C-CH-H CHAIN HUNG
C-BR-H CEILING BRACKET HUNG

TYPE FACE

HM – HELVETICA MEDIUM
HC – HELVETICA COMPACT

COLORS

W/R – WHITE & RED
W/GR – WHITE & GREEN
W/B – WHITE & BLUE
W/B/GR – WHITE, BLUE & GREEN
W/BL – WHITE & BLACK
W/R/GR – WHITE, RED & GREEN
W/R/GR – WHITE, RED & GREEN
Y/BL – YELLOW & BLACK
W – WHITE
R – RED
GR – GREEN
B – BLUE

NOTE:

COPY SHALL BE SILKSCREENED 3-M SCOTHCHLITE HIGH INTENSITY GRADE WITH REFLECTIVE TEXT OR EQUAL DIE CUT VINYL

COLOR CODES OF FLOORS.

| LOCATION | COLOR | PAINT MANUF. NO. |
|---|---|---|
| GROUND LEVEL | GREEN | FRAZEE 7155D |
| SECOND LEVEL | RED | FRAZEE AC11R |
| THIRD LEVEL | BLUE | FRAZEE 7075D |
| FOURTH LEVEL | | |
| SIGNAGE BACKGROUND | GREEN | FRAZEE AC102N |

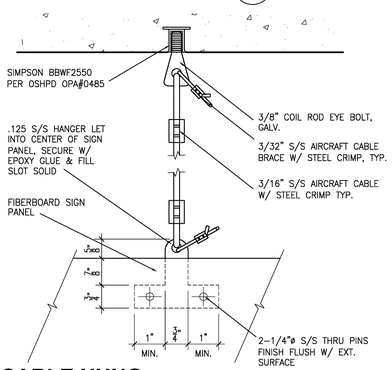


## CABLE HUNG ANCHORAGE DETAIL (17)

SCALE: 6" = 1'-0"

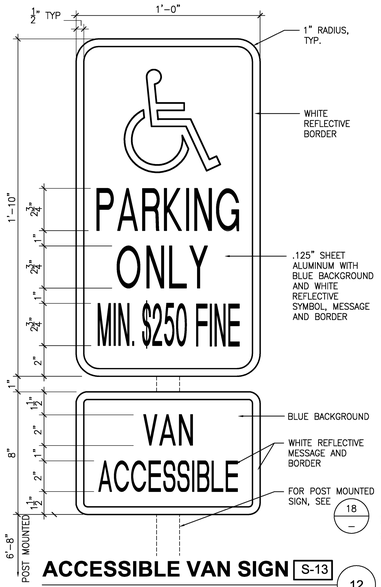


## ACCESSIBLE VAN SIGN S-13 (12)

SCALE: 3"=1'-0"

## ACCESSIBLE SIGN S-12 (11)

SCALE: 3"=1'-0"

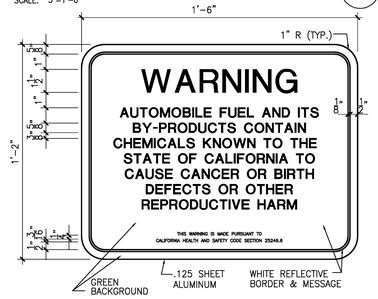


## SIGN DETAIL S-3 (3)

SCALE: 3"=1'-0"

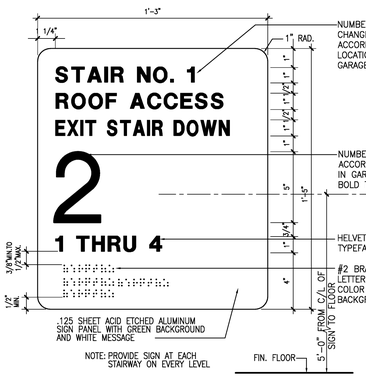


## STAIR INFORMATION SIGN S-1B (16)

SCALE: 3"=1'-0"

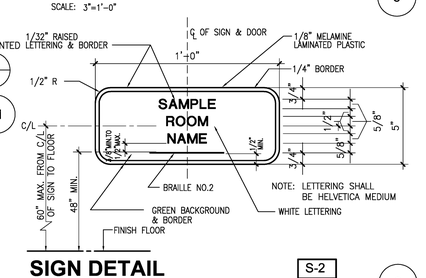


## SIGN DETAIL S-2 (2)

SCALE: 3"=1'-0"

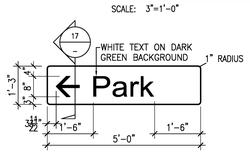


## DIRECTIONAL SIGN S-11 (10)

SCALE: 1/2" = 1'-0"

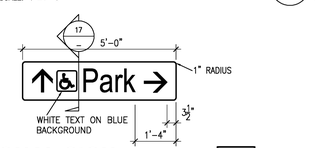


## DIRECTIONAL SIGN S-10 (9)

SCALE: 1/2" = 1'-0"

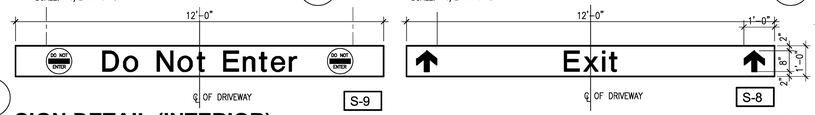


## SIGN DETAIL (INTERIOR) (8)

SCALE: 1/2"=1'-0"

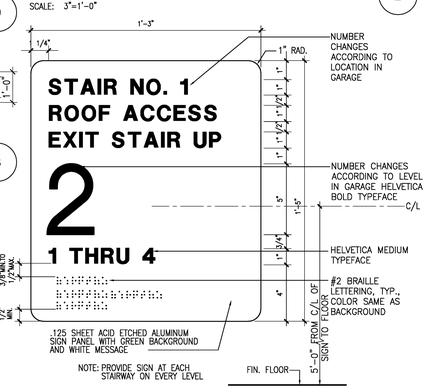


## STAIR INFORMATION SIGN S-1A (1)

SCALE: 3"=1'-0"

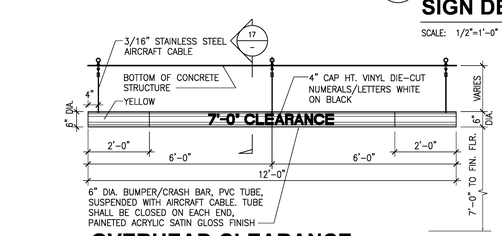


## OVERHEAD CLEARANCE WARNING SIGN S-14 (15)

SCALE: 1/2" = 1'-0"

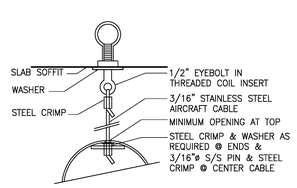


## ATTACHMENT DETAIL (14)

SCALE: N.T.S.

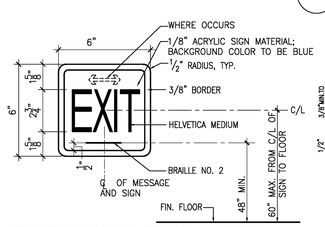


## EXIT SIGN DETAIL S-7 (7)

SCALE: 3"=1'-0"

## SIGNAGE NOTES:

1. SIGNS AND IDENTIFICATION SHALL COMPLY WITH CBC 1117B.5

a. LINE SPACING BETWEEN BASELINES OF SEPARATE CHARACTER LINES AT MINIMUM 135 PERCENT AND MAXIMUM 170 PERCENT OF CHARACTER HEIGHT.
b. CHARACTER FONT WITH UPPERCASE LETTER "O" WIDTH MINIMUM 60 PERCENT AND MAXIMUM 110 PERCENT UPPERCASE LETTER "I" HEIGHT.
c. CHARACTERS WITH STROKE THICKNESS OF UPPERCASE LETTER "I" MINIMUM 10 PERCENT AND MAXIMUM 20 PERCENT CHARACTER HEIGHT.
d. CHARACTERS SPACED WITH CLOSEST POINTS OF ADJACENT CHARACTER MINIMUM 10 PERCENT AND MAXIMUM 35 PERCENT OF CHARACTER HEIGHT.
e. CHARACTER HEIGHT SIZED ACCORDING TO CBC 1117B.5.4 AND BASED ON UPPERCASE LETTER "I".

2. RAISED CHARACTERS ON SIGNAGE SHALL COMPLY WITH CBC 1117B.5.5

a. CHARACTERS RAISED MINIMUM 1/32 INCH
b. WIDTH OF UPPERCASE LETTER "O" MINIMUM 60 PERCENT AND MAXIMUM 110 PERCENT OF UPPERCASE LETTER "I"
c. STROKE THICKNESS OF UPPERCASE LETTER "I" MAXIMUM 15% HEIGHT OF CHARACTER
d. SPACING BETWEEN INDIVIDUAL RAISED CHARACTERS PER THE FOLLOWING:
   . WHERE CHARACTERS HAVE RECTANGULAR CROSS SECTIONS, MINIMUM 1/8 INCH AND MAXIMUM 4 TIMES RAISED CHARACTER STROKE WIDTH
   . WHERE CHARACTERS HAVE NON-RECTANGULAR CROSS SECTIONS, MINIMUM 1/16 INCH AND MAXIMUM 4 TIMES RAISED CHARACTER STROKE WIDTH AT BASE OF CROSS SECTIONS AND MINIMUM 1/8 INCH AND MAXIMUM 4 TIMES RAISED CHARACTER STROKE WIDTH AT TOP OF CROSS SECTIONS.
e. SPACING BETWEEN BASELINES OF SEPARATE LINES OF RAISED CHARACTERS OF MINIMUM 135% AND MAXIMUM 170% OF RAISED CHARACTER HEIGHT.

3. BRAILLE ON SIGNAGE SHALL COMPLY WITH CBC 1117B.5.6:

CONTRACTED (GRADE 2) BRAILLE SHALL BE USED WHEREVER BRAILLE IS REQUIRED IN OTHER PORTIONS OF THESE STANDARDS. DOTS SHALL BE 1/10 INCH (2.54 mm) ON CENTER IN EACH CELL WITH 2/10-INCH (5.08 mm) SPACE BETWEEN CELLS, MEASURED FROM THE SECOND COLUMN OF DOTS IN THE FIRST CELL TO THE FIRST COLUMN OF DOTS IN THE SECOND CELL. DOTS SHALL BE RAISED A MINIMUM OF 1/40 INCH (0.635 mm) ABOVE THE BACKGROUND. BRAILLE DOTS SHALL BE DOMED, OR ROUNDED.

## VISUAL CHARACTER HEIGHT

| HEIGHT TO FINISH FLOOR OR GROUND FROM BASELINE OF CHARACTER | HORIZONTAL VIEWING DISTANCE | MINIMUM CHARACTER HEIGHT |
|---|---|---|
| 40 INCHES (1015 mm) TO LESS THAN OR EQUAL TO 70 INCHES (1780 mm) | LESS THAN 72 INCHES (1830 mm) | 5/8 INCH (16 mm) |
| | 72 INCHES (1830 mm) AND GREATER | 5/8 INCH (16 mm), PLUS 1/8 INCH (3.2 mm) PER FOOT (305 mm) OF VIEWING DISTANCE ABOVE 72 INCHES (1830 mm) |
| GREATER THAN 70 INCHES (1780 mm) TO LESS THAN OR EQUAL TO 120 INCHES (3050 mm) | LESS THAN 180 INCHES (4570 mm) | 2 INCHES (51 mm) |
| | 180 INCHES (4570 mm) AND GREATER | 2 INCHES (51 mm), PLUS 1/8 INCH (3.2 mm) PER FOOT (305 mm) OF VIEWING DISTANCE ABOVE 180 INCHES (4570 mm) |
| GREATER THAN 120 INCHES (3050 mm) | LESS THAN 21 FEET (6400 mm) | 3 INCHES (75 mm) |
| | 21 FEET (6400 mm) AND GREATER | 3 INCHES (75 mm), PLUS 1/8 INCH (3.2 mm) PER FOOT (305 mm) OF VIEWING DISTANCE ABOVE 21 FEET (6400 mm) |

County of San Diego
Cedar & Kettner
Development Project
San Diego, California

McCARTHY
20401 S.W. BIRCH STREET SUITE 300
Newport Beach, California 92660


Architect
IPD
Alameda
Irvine
Los Angeles
Architecture / Engineering / Consulting
www.ipd-global.com
2 Faraday, Suite 101, Irvine CA 92618
Phone 949 595 8004 Fax 949 595 8011


| Revision | Date |
|---|---|
| 100% DESIGN DEVELOPMENT | 10/23/13 |
| 90% CDs - 1ST PLAN CHECK | 12/24/13 |
| 2ND PLAN CHECK | 04/23/14 |

| | |
|---|---|
| Date | |
| IPD Job No. | 13-813 |
| Drawn By | MS |
| Checked By | |
| Scale | 3/32" = 1'-0" |

CONSTRUCTION DOCUMENTS

Drawing Title
SIGNAGE SCHEDULE AND DETAILS

Drawing No.
A9.01

IPD, Inc.

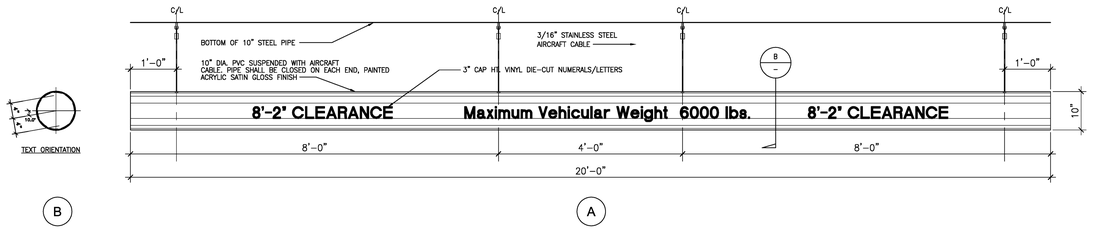


## OVERHEAD CLEARANCE WARNING BAR (14)

SCALE: 3/4" = 1'-0"

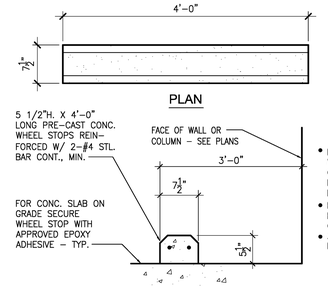


LOCATION

- DISTANCE(d) FROM WHEEL SIDE OF WHEEL STOP TO EDGE OF PAVEMENT OR OBSTACLE. VERIFY EXACT LOCATION WITH ARCHITECT PRIOR TO INSTALLATION.
- EDGE OF WHEEL STOP SHALL BE 1'-0" FROM STALL MODULE LINE UNLESS OTHERWISE NOTED.
- ALL WHEEL STOPS TO BE PLACED ON DRIVER SIDE OF STALLS.

## PRECAST CONCRETE WHEEL-STOP DETAIL (6)

SCALE: 1"=1'-0"

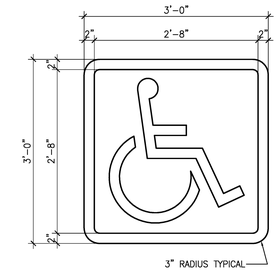


- BORDER AND IMAGE TO BE STENCIL PAINTED WITH WHITE RE- FLECTORIZED TRAFFIC PAINT
- BACKGROUND TO BE BLUE

## ACCESSIBLE FLOOR SYMBOL (PG-1) (5)

SCALE: 1"=1'-0"

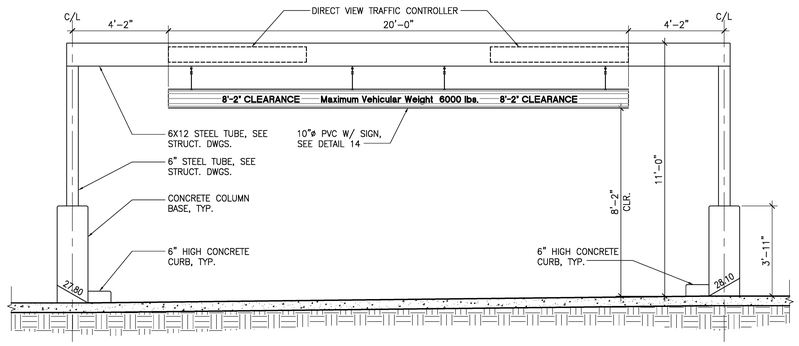


## BARRIER BEAM @ EAST ENTRANCE/EXIT (KETTNER BLVD.) (13)

SCALE: 3/8" = 1'-0"

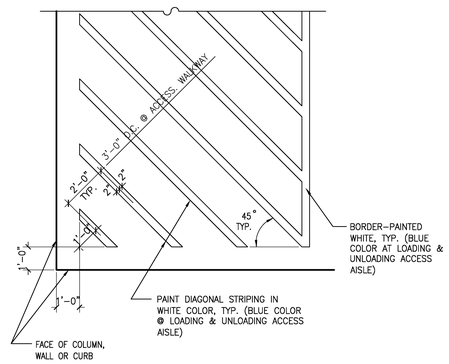


STRIPING REQUIREMENTS: THE REVISED REGULATIONS INDICATE THAT THE ACCESSIBLE PARKING SPACE STRIPING SHALL BE AS FOLLOWS:
THE BORDER (PERIMETER) OF THE LOADING AND UNLOADING ACCESS AISLE SHALL BE PAINTED BLUE.
THE HATCHING WITHIN THE LOADING AND UNLOADING ACCESS AISLE SHALL BE PAINTED A SUITABLE CONTRASTING COLOR TO THE SURFACE MATERIAL AT 3'-0" MAXIMUM ON CENTER. BLUE OR WHITE PAINT IS PREFERRED. (WHITE ON ASPHALT, BLUE ON CONCRETE)
2010 CBC 1129B.3

## TYPICAL DIAGONAL STRIPING (7)

SCALE: 3/8"=1'-0"

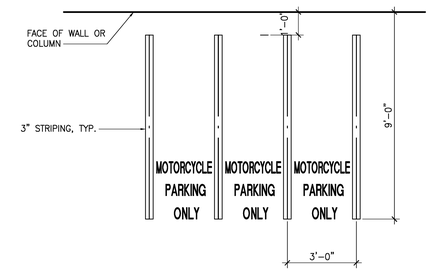


## TYPICAL MOTORCYCLE STRIPING (4)

SCALE: 3/8" = 1'-0"

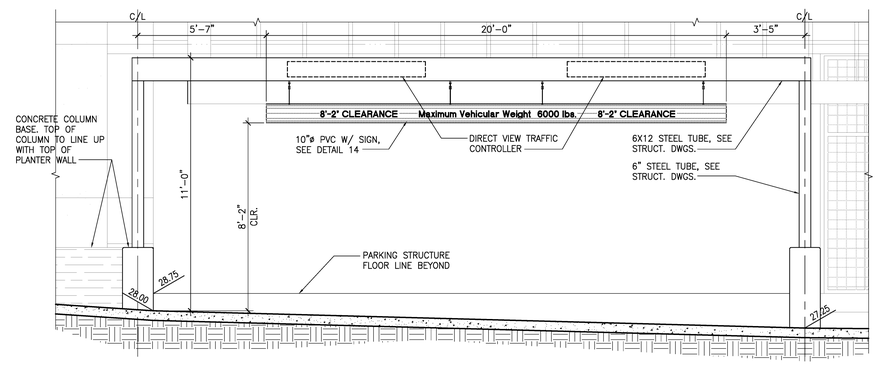


## BARRIER BEAM @ NORTH EXIT/ENTRANCE (W. CEDAR ST.) (12)

SCALE: 3/8" = 1'-0"

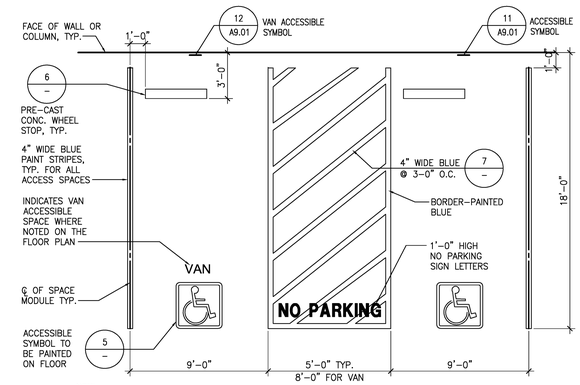


NOTE:
1. SLOPE FOR ACCESSIBLE SPACES & ACCESS AISLES SHALL NOT EXCEED 2 PERCENT IN ANY DIRECTION.

STRIPING REQUIREMENTS: THE REVISED REGULATIONS INDICATE THAT THE ACCESSIBLE PARKING SPACE STRIPING SHALL BE AS FOLLOWS:
THE BORDER (PERIMETER) OF THE LOADING AND UNLOADING ACCESS AISLE SHALL BE PAINTED BLUE.
THE HATCHING WITHIN THE LOADING AND UNLOADING ACCESS AISLE SHALL BE PAINTED A SUITABLE CONTRASTING COLOR TO THE SURFACE MATERIAL AT 3'-0" MAXIMUM ON CENTER. BLUE OR WHITE PAINT IS PREFERRED. (WHITE ON ASPHALT, BLUE ON CONCRETE)
2010 CBC 1129B.3

## ACCESSIBLE SPACE STRIPING @ 90° (3)

SCALE: 1/4"=1'-0"

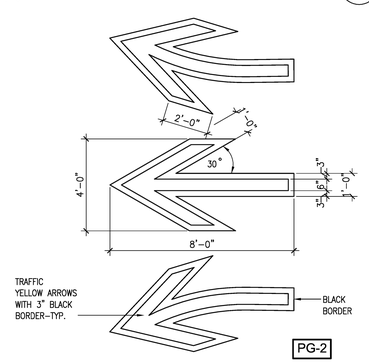


NOTES: 1. STENCIL PAINT DIRECTLY ON FLOOR SLAB W/REFLECTORIZED PAINT
2. STRIPING PER CALTRANS STANDARDS.

## PAINTED DIRECTIONAL ARROWS (8)

SCALE: 3/8"=1'-0"

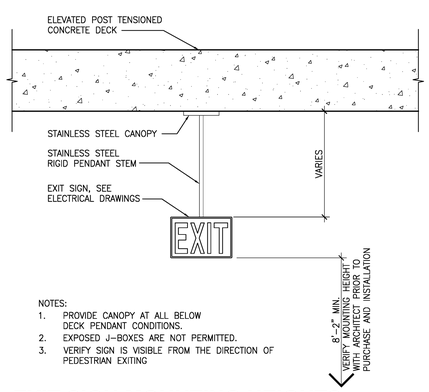


NOTES:
1. PROVIDE CANOPY AT ALL BELOW DECK PENDANT CONDITIONS.
2. EXPOSED J-BOXES ARE NOT PERMITTED.
3. VERIFY SIGN IS VISIBLE FROM THE DIRECTION OF PEDESTRIAN EXITING

## EXIT SIGN MOUNTING HEIGHTS (11)

SCALE: 1"=1'-0"

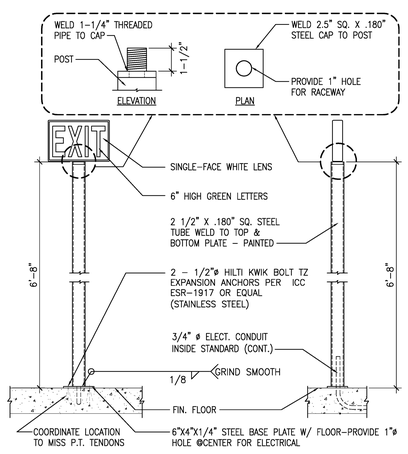


NOTE:
- SUBMIT SHOP DRAWING, PROVIDE NON-CORROSIVE TOP & BOTTOM CONNECTIONS AND METAL STRAP DETAIL
- FOR ELECTRICAL FIXTURE REFER TO ELECTRICAL DRAWINGS
- ALL STEEL ITEMS TO BE GALVANIZED; ALL ANCHORS TO BE STAINLESS STEEL

## EXIT SIGN AT ROOF LEVEL (10)

SCALE: 1"=1'-0"

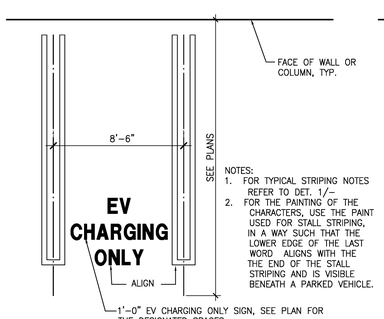


NOTES:
1. FOR TYPICAL STRIPING NOTES REFER TO DET. 1/-
2. FOR THE PAINTING OF THE CHARACTERS, USE THE PAINT USED FOR STALL STRIPING, IN A WAY SUCH THAT THE LOWER EDGE OF THE LAST WORD ALIGNS WITH THE THE END OF THE STALL STRIPING AND IS VISIBLE BENEATH A PARKED VEHICLE.

## CLEAN AIR VEHICLE (9)

SCALE: 1/4"=1'-0"

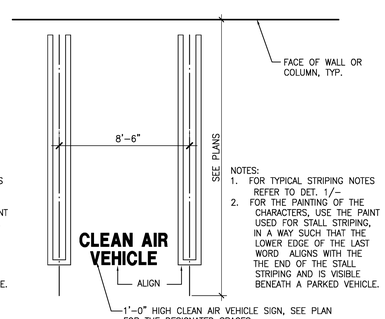


NOTES:
1. FOR TYPICAL STRIPING NOTES REFER TO DET. 1/-
2. FOR THE PAINTING OF THE CHARACTERS, USE THE PAINT USED FOR STALL STRIPING, IN A WAY SUCH THAT THE LOWER EDGE OF THE LAST WORD ALIGNS WITH THE THE END OF THE STALL STRIPING AND IS VISIBLE BENEATH A PARKED VEHICLE.

## CLEAN AIR VEHICLE (2)

SCALE: 1/4"=1'-0"

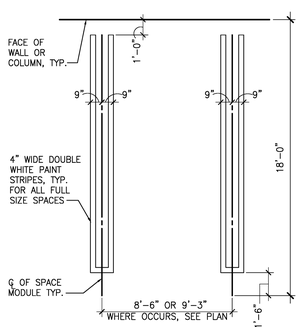


TYPICAL NON ACCESSIBLE -90° STALL

## STALL STRIPING (1)

SCALE: 1/4"=1'-0"

County of San Diego
Cedar & Kettner
Development Project
San Diego, California

McCARTHY
20401 S.W. BIRCH STREET SUITE 300
Newport Beach, California 92660

Architect
IPD
Alameda
Irvine
Los Angeles
Architecture / Engineering / Consulting
www.ipd-global.com
2 Faraday, Suite 101, Irvine CA 92618
Phone 949 595 8004 Fax 949 595 8011

| Revision | Date |
|---|---|
| 100% DESIGN DEVELOPMENT | 10/23/13 |
| 90% CDs - 1ST PLAN CHECK | 12/24/13 |
| 2ND PLAN CHECK | 04/23/14 |

| | |
|---|---|
| Date | |
| IPD Job No. | 13-813 |
| Drawn By | MS |
| Checked By | |
| Scale | 3/32" = 1'-0" |

CONSTRUCTION DOCUMENTS

Drawing Title
STRIPING AND MARKING DETAILS

Drawing No.
A9.02

IPD, Inc.

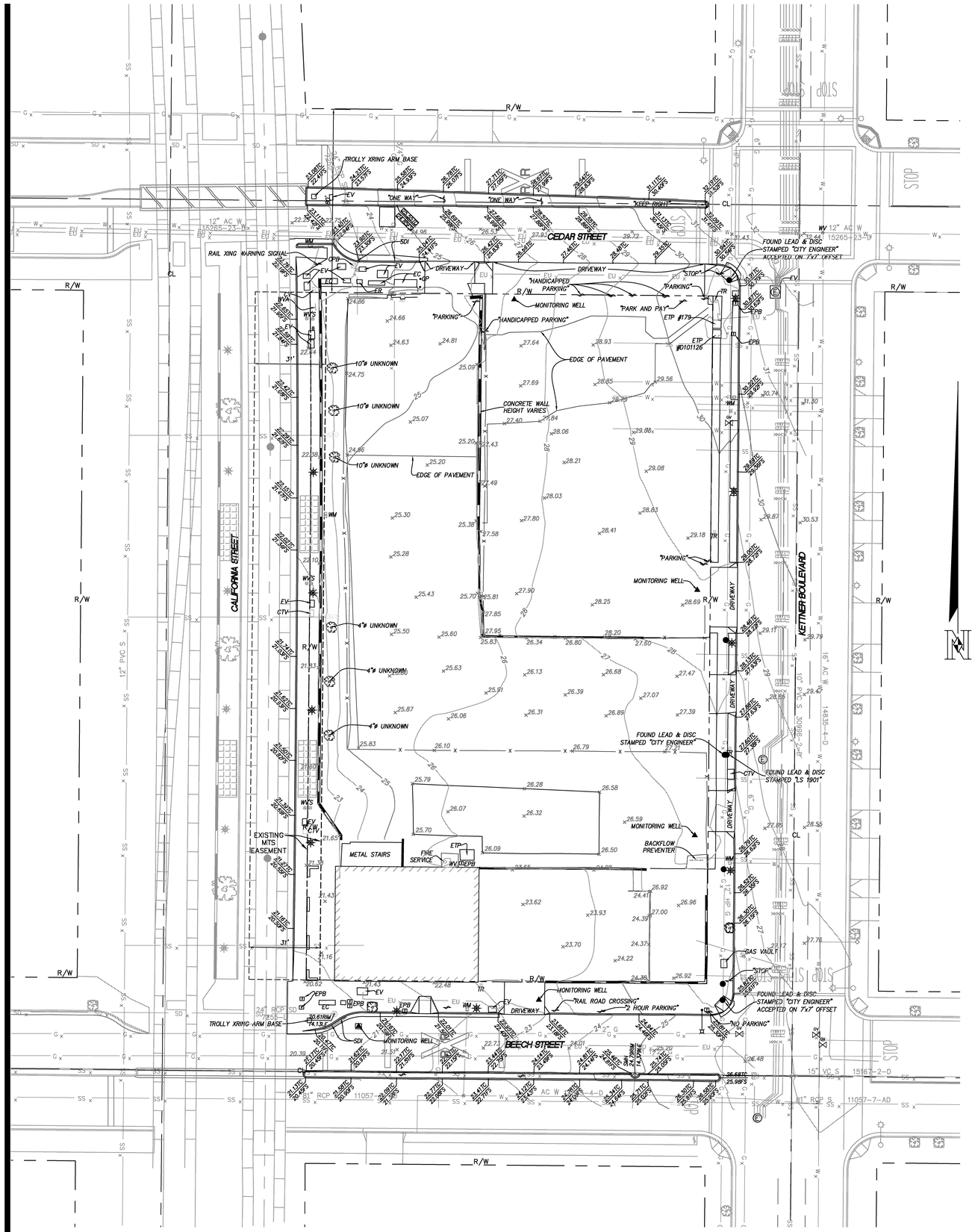


## EXISTING CONDITIONS

SCALE: 1" = 20'

## LEGEND

| | |
|---|---|
| | BUILDING FOOTPRINT |
| | CENTERLINE |
| CPB | COMMUNICATION PULLBOX |
| CV | COMMUNICATION VAULT |
| EU | ELECTRIC LINE |
| EC | ELECTRIC CABINET |
| EPB | ELECTRIC PULLBOX |
| ETP | ELECTRIC TRANSFORMER PAD |
| EV | ELECTRIC VAULT |
| x | FENCE LINE |
| FF | FINISHED FLOOR |
| FS | FINISHED SURFACE |
| FL | FLOW LINE |
| G | GAS LINE |
| GV | GAS VALVE |
| GP | GUARD POST |
| I.E | INVERT ELEVATION |
| | LIGHT STANDARD |
| | LOT LINE |
| | PROPERTY LINE |
| SCO | SEWER CLEAN OUT |
| SS | SEWER LINE |
| SMH | SEWER MANHOLE |
| SDI | STORM DRAIN INLET |
| SD MH | STORM DRAIN MANHOLE |
| TR | TELEPHONE RISER |
| TC | TOP OF CURB |
| W | WATER LINE |
| WM | WATER METER |
| WV | WATER VALVE |
| ● | FOUND MONUMENT AS NOTED |

20 0 20 40 60 80

SCALE 1" = 20'

**County of San Diego**
**Cedar & Kettner**
**Development Project**
San Diego, California

McCARTHY

20401 S.W. BIRCH STREET SUITE 300
Newport Beach, California 92660

Architect

IPD

Alameda
Irvine
Los Angeles

Architecture / Engineering / Consulting
www.ipd-global.com

2 Faraday, Suite 101, Irvine CA 92618
Phone 949 595 8004 Fax 949 595 8011

NASLAND ENGINEERING

CIVIL ENGINEERING • SURVEYING
LAND PLANNING

4740 Ruffner Street, San Diego, CA, 92111
PH: +858-292-7770
FAX: +858-571-3241

REGISTERED PROFESSIONAL ENGINEER
ADAM EUGENE POLTER
69298
EXP. 6-30-14
CIVIL
STATE OF CALIFORNIA

| Revision | Date |
|---|---|
| 100% DESIGN DEVELOPMENT | 10/23/13 |
| 90% CDs - 1ST PLAN CHECK | 12/24/13 |
| 2ND PLAN CHECK | 04/23/14 |

| | |
|---|---|
| Date | 04-22-14 |
| IPD Job No. | 13-813 |
| Drawn By | Adam P. |
| Checked By | Peter R. |
| Scale | |

CONSTRUCTION DOCUMENTS

Drawing Title

**EXISTING CONDITIONS**

Drawing No.

**C-100**

IPD, Inc.

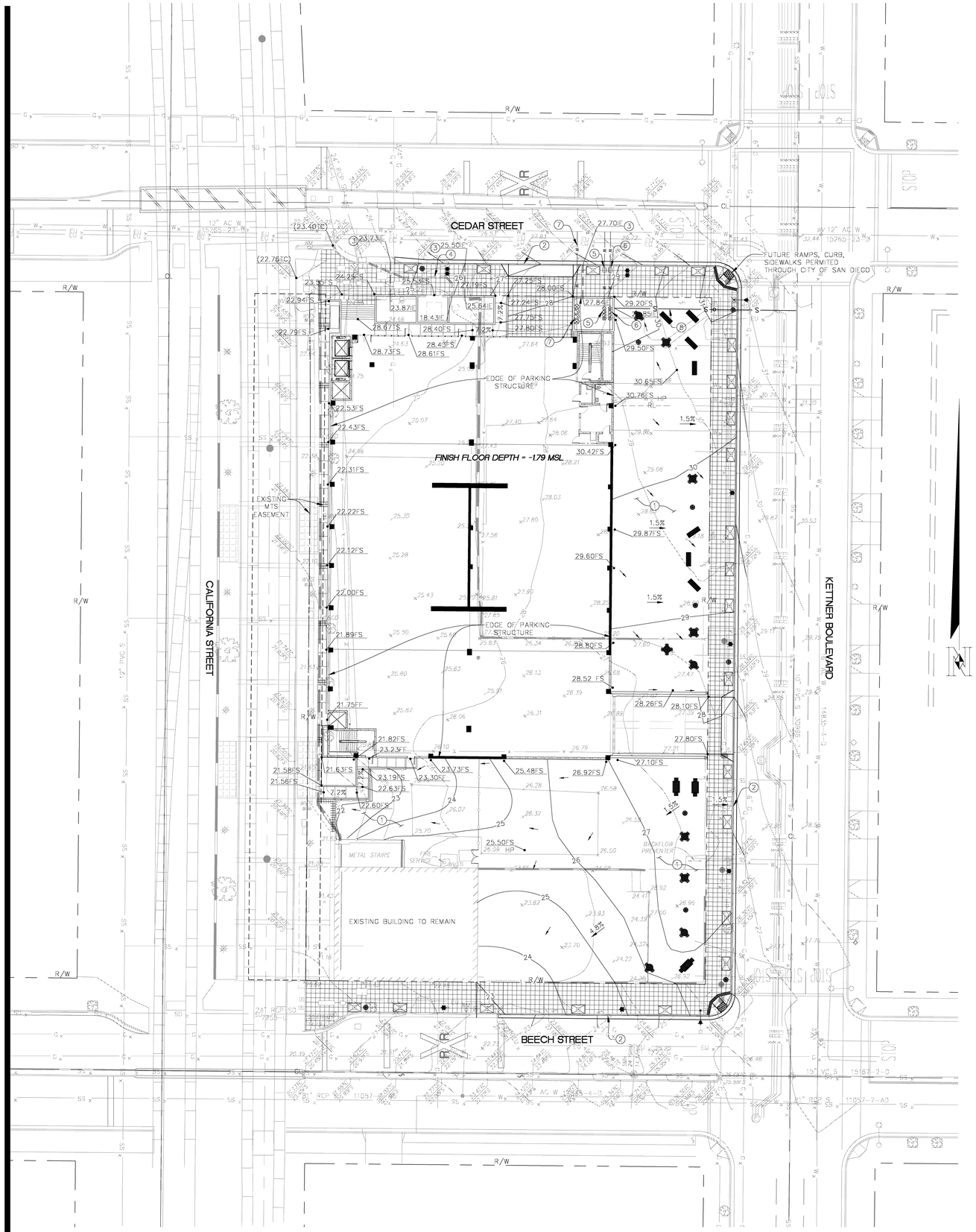


GRADING PLAN
SCALE: 1" = 20'

**CONSTRUCTION NOTES:**

1. INSTALL HARDSCAPE AND LANDSCAPE FINISHES PER LANDSCAPE PLANS.
2. ALL ELEVATIONS, IMPROVEMENTS, AND DRAINAGE FEATURES SHOWN WITHIN THE PUBLIC RIGHT OF WAY ARE FOR REFERENCE ONLY. SEE THE CITY OF SAN DIEGO IMPROVEMENT PLAN SET 37763-D.
3. 3" SIDEWALK UNDERDRAIN PER CITY OF SAN DIEGO IMPROVEMENT PLAN 37763-4-D.
4. 6" PVC STORM DRAIN PER CITY OF SAN DIEGO IMPROVEMENT PLAN 37763-4-D.
5. 1" IRRIGATION SERVICE, METER, AND BACKFLOW PER CITY OF SAN DIEGO IMPROVEMENT PLAN 37763-4-D.
6. 2" WATER SERVICE, 1 1/2" METER, AND 1 1/2" BACKFLOW PER CITY OF SAN DIEGO IMPROVEMENT PLAN 37763-4-D.
7. 6" FIRE SERVICE AND BACKFLOW PER CITY OF SAN DIEGO IMPROVEMENT PLAN 37763-4-D.
8. 6" PVC SEWER LATERAL PER CITY OF SAN DIEGO IMPROVEMENT PLAN 37763-5-D.

**LEGEND**

HP = HIGH POINT
FL = FLOW LINE
FS = FINISHED SURFACE
FG = FINISHED GRADE
FF = FINISHED FLOOR
TG = TOP OF GRATE
IE = INVERT ELEVATION
R/W = RIGHT OF WAY
PL = PROPERTY LINE DIMENSION
CL = CENTER LINE

20 0 20 40 60 80
SCALE 1" = 20'

**County of San Diego**
**Cedar & Kettner**
**Development Project**
San Diego, California

McCARTHY
20401 S.W. BIRCH STREET SUITE 300
Newport Beach, California 92660

Architect
IPD
Alameda
Irvine
Los Angeles
Architecture / Engineering / Consulting
www.ipd-global.com
2 Faraday, Suite 101, Irvine CA 92618
Phone 949 595 8004 Fax 949 595 8011

NASLAND ENGINEERING
CIVIL ENGINEERING • SURVEYING
LAND PLANNING
4740 Ruffner Street, San Diego, CA, 92111
PH: +858-292-7770
FAX +858-571-3241

REGISTERED PROFESSIONAL ENGINEER
ADAM EUGENE POLLOCK
69298
EXP. 6-30-14
CIVIL
STATE OF CALIFORNIA

| Revision | Date |
|---|---|
| 100% DESIGN DEVELOPMENT | 10/23/13 |
| 90% CDs - 1ST PLAN CHECK | 12/24/13 |
| 2ND PLAN CHECK | 04/23/14 |

| | |
|---|---|
| Date | 12-24-13 |
| IPD Job No. | 13-813 |
| Drawn By | Adam P. |
| Checked By | Peter R. |
| Scale | |

CONSTRUCTION DOCUMENTS

Drawing Title
GRADING PLAN

Drawing No.
C-200

IPD, Inc.

# SYMBOLS AND ABBREVIATIONS

## TELECOM

- OUTLET MOUNTED ON WALL
- FLUSH FLOOR MOUNTED OUTLET
- CEILING MOUNTED OUTLET
- WAP — WIRELESS ACCESS POINT

## TELECOM OUTLET TYPES

- 1/0 — INDICATES QUANTITY OF VOICE AND DATA JACKS. VOICE JACKS LISTED FIRST. E.G. 1/0 INDICATES ONE VOICE JACK AND NO DATA JACKS. PULLSTRING ALWAYS PROVIDED. WHERE NO QUANTITY IS NOTED, PROVIDE 0 VOICE JACK, 2 DATA JACKS, AND PULLSTRING. PROVIDE 1" CONDUIT STUBBED TO NEAREST ACCESSIBLE CEILING SPACE
- AC — MOUNTED 3" ABOVE COUNTER BACKSPLASH
- R — RACEWAY MOUNTED
- W — OUTLET FOR WALL MOUNTED TELEPHONE HANDSET, MOUNT AT +48" AFF PROVIDE NO VOICE ONE DATA
- B — BLANK FACEPLATE (ROUGH–IN ONLY)
- D — DIRECT CONNECTION TO PANEL (PANEL BY OTHERS)
- M — PATIENT MONITORING
- P — PAY TELEPHONE

## TELECOM - MISCELLANEOUS

- CABLE TRAY WITH FLANGE SIDE RAILS AND LADDER RUNGS
- RUNWAY CABLE TRAY
- TMGB — TELECOMMUNICATIONS MAIN GROUNDING BAR
- TGB — TELECOMMUNICATIONS GROUNDING BAR
- BUNDLED CABLE SUPPORT, J–HOOK SYSTEM

## ELECTRICAL RISER

- THERMAL ELEMENT
- CAPACITOR
- CONTACT, NORMALLY OPEN AND NORMALLY CLOSED
- R — RELAY
- G — GFI RELAY
- ST — SHUNT TRIP RELAY
- C — CONTACTOR
- PUSHBUTTON
- SWITCH (2–POLE)
- H / A / O — SWITCH (3–POLE)
- AUTOMATIC TRANSFER SWITCH
- CIRCUIT BREAKER
- CIRCUIT BREAKER (DRAWOUT)
- GF — CIRCUIT BREAKER (GFI)
- GF — CIRCUIT BREAKER (GFI WITH DRAWOUT)
- CIRCUIT BREAKER (NETWORK PROTECTOR)
- CIRCUIT BREAKER (THERMAL OVERLOAD)
- CIRCUIT BREAKER (MAGNETIC OVERLOAD)
- FUSED SWITCH
- FUSE (ISOLATING)
- FUSE OR CURRENT LIMITER
- TVSS — TRANSIENT VOLTAGE SURGE SUPPRESSOR
- SURGE ARRESTOR
- LIGHTNING ARRESTOR
- M — METER
- CURRENT TRANSFORMER
- WHM — WATT HOUR METER
- A — AMMETER
- V — VOLTMETER
- G — ENGINE–GENERATOR
- PM — POWER METER
- K — KEY INTERLOCK
- TRANSFORMER
- TRANSFORMER WITH MAGNETIC CORE SHOWN
- SHIELDED TRANSFORMER WITH MAGNETIC CORE SHOWN
- ELECTROSTATICALLY SHIELDED TRANSFORMER WITH MAGNETIC CORE SHOWN
- GROUND
- BUSWAY END TAP BOX
- STRESS RELIEF, MEDIUM VOLTAGE
- CABLE TO BUS CONNECTION
- SPLICE
- SPACE — BUS SPACE
- BUS DUCT
- FEEDER SIZE IDENTIFICATION
- AVAILABLE FAULT CURRENT IDENTIFICATION

## ELECTRONIC SECURITY

- M — MOTION DETECTOR, WALL MOUNTED
- M — MOTION DETECTOR, CEILING MOUNTED
- A — LOCAL ALARM
- KP — KEYPAD
- CR — CARD READER
- BR — BIOMETRIC READER
- REX — REQUEST TO EXIT DETECTOR
- DS — DOOR CONTACT SWITCH
- ES — ELECTRIC STRIKE
- EL — ELECTRIC LOCK
- EX — ELECTRIC LATCH RETRACTION
- PSP — POWER SUPPLY PANEL
- ACP — ACCESS CONTROL PANEL
- IDP — INTRUSION DETECTION PANEL
- IAD — INTRUSION ARM/DISARM
- DA — DURESS ALARM BUTTON
- DA — VOICE DURESS ALARM, WALL MOUNTED
- DA — VOICE DURESS ALARM WITH STROBE, WALL MOUNTED
- DA — VOICE DURESS ALARM WITH STROBE, PEDESTAL MOUNTED
- CC — CCTV MONITOR
- CCTV CAMERA
- F — CCTV CAMERA, FIXED POSITION
- PTZ — CCTV CAMERA, PAN/TILT/ZOOM
- OP — CCTV CAMERA, OPERATIONAL
- IM — MASTER INTERCOM STATION, AUDIO ONLY
- IS — SLAVE INTERCOM STATION, AUDIO ONLY
- IM — MASTER INTERCOM STATION, AUDIO/VIDEO
- IS — SLAVE INTERCOM STATION, AUDIO/VIDEO
- IM — MASTER INTERCOM STATION, AUDIO ONLY, DOOR RELEASE
- IS — SLAVE INTERCOM STATION, AUDIO ONLY, DOOR INTERCONNECT
- IM — MASTER INTERCOM STATION, AUDIO/VIDEO, DOOR RELEASE
- IS — SLAVE INTERCOM STATION, AUDIO/VIDEO, DOOR INTERCONNECT
- -- — DEVICE IDENTIFICATION

## EQUIPMENT

- E — EQUIPMENT CONNECTION, E = EMERGENCY POWER
- EV — ELECTRIC VEHICLE CHARGING STATION
- MOTOR CONNECTION, SINGLE PHASE
- MOTOR CONNECTION, 3 PHASE
- T — TRANSFORMER, <30KVA, NOT TO SCALE
- TRANSFORMER, 30KVA OR GREATER, DRAWN TO SCALE
- GROUND BAR, LENGTH TO SCALE
- EQUIPMENT CABINET
- GRAP — GENERATOR REMOTE ALARM PANEL

## PANELBOARDS

- 208V SYSTEM PANELBOARD
- 480V SYSTEM PANELBOARD

## OUTLET MOUNTING HEIGHTS

SPECIAL OUTLET HEIGHTS ARE SHOWN ON THE ELECTRICAL DRAWINGS OR ON THE ARCHITECTURAL DRAWINGS. IF SPECIAL OUTLET HEIGHTS ARE NOT SHOWN OR REQUIRED, THEN LOCATE OUTLETS AS NOTED BELOW. OUTLET HEIGHTS ARE MEASURED FROM THE FINISHED FLOOR TO THE CENTERLINE OF THE OUTLET UNLESS OTHERWISE NOTED.

| | |
|---|---|
| RECEPTACLES | 18 INCHES (460 mm) VERTICALLY MOUNTED |
| LIGHT SWITCHES | 48 INCHES (1200 mm) TO TOP OF BOX, VERTICALLY MOUNTED |
| CLOCK OUTLET | 80 INCHES (2030 mm) |
| PANELBOARDS | 72 INCHES (1830 mm) TO TOP OF PANELBOARD |
| TELECOM OUTLET, DESK HANDSET | 18 INCHES (460 mm) VERTICALLY MOUNTED |
| TELECOM OUTLET, WALL HANDSET | 48 INCHES (1370 mm) TO TOP OF BOX, VERTICALLY MOUNTED |
| FIRE ALARM PULL STATION | 48 INCHES (1200 mm) TO TOP OF BOX |
| FIRE ALARM AUDIBLE NOTIFICATION DEVICES | TOP EDGE NOT LESS THAN 90 INCHES (2300 mm) AFF AND NOT LESS THAN 6 INCHES (150 mm) BELOW CEILING. 6 INCHES (150 mm) BELOW CEILING SHALL TAKE PRECEDENCE WHERE CEILING HEIGHT DOES NOT ALLOW BOTH DIMENSIONS |
| FIRE ALARM VISUAL AND COMBINATION AUDIBLE/VISUAL NOTIFICATION DEVICES | BOTTOM EDGE SHALL BE AT 80 INCHES (2030 mm) AFF OR 6 INCHES (150 mm) BELOW CEILING HEIGHT, WHICHEVER IS LOWER |
| FIRE ALARM CONTROL PANEL | 72 INCHES (1830 mm) TO TOP OF PANELBOARD |

## LIGHTING

CIRCUITS: EMERGENCY / NORMAL

- N/A — a — LOWER–CASE LETTER NEAR FIXTURE DENOTES SWITCH LEG (TYP)
- RECESSED FLUORESCENT FIXTURE, DRAWN TO SCALE
- SURFACE MOUNTED FLUORESCENT FIXTURE, DRAWN TO SCALE
- FLUORESCENT STRIP FIXTURE, LENGTH TO SCALE
- WALL MOUNTED FLUORESCENT FIXTURE, LENGTH TO SCALE (NUMBER OF MOUNTING POINTS WILL VARY WITH FIXTURE LENGTH)
- RECESSED DOWNLIGHT FIXTURE
- SURFACE MOUNTED DOWNLIGHT FIXTURE
- PENDANT MOUNTED FIXTURE
- LINEAR PENDANT MOUNTED FIXTURE, LENGTH TO SCALE (NUMBER OF MOUNTING POINTS WILL VARY WITH FIXTURE LENGTH)
- WALL MOUNTED FIXTURE
- WALL MOUNTED RECESSED FIXTURE
- WALL MOUNTED VERTICALLY ORIENTED FIXTURE
- WALL MOUNTED RECESSED LINEAR FIXTURE, LENGTH TO SCALE
- (normal: N/A) EXIT SIGN, FILLED SIDES ARE ILLUMINATED, DIRECTIONAL ARROWS AS INDICATED
- N/A — EMERGENCY BATTERY PACK
- N/A — N — NIGHT LIGHT
- N/A — CEILING MOUNTED WALL WASH FIXTURE, OPEN AREA INDICATES DIRECTION OF ILLUMINATION
- N/A — CEILING MOUNTED LINEAR WALL WASH FIXTURE, LENGTH TO SCALE
- RECESSED ACCENT FIXTURE
- SURFACE MOUNTED ACCENT FIXTURE
- MONOPOINT FIXTURE
- N/A — TRACK LIGHTING
- N/A — CONTINUOUS LINEAR SOURCE, SEE ARCHITECTURAL FOR ACTUAL FIXTURE
- MULTI–LAMP ACCENT FIXTURE
- N/A — UNDERCOUNTER TASK LIGHT
- N/A — FIBER OPTIC REMOTE SOURCE
- N/A — STEP LIGHT
- FIXTURE ON NORMAL AND EMERGENCY CIRCUITS
- XXX / XXXX — FIXTURE IDENTIFICATION, SEE LIGHTING FIXTURE SCHEDULE

## SITE AND LANDSCAPE LIGHTING

CIRCUITS: EMERGENCY / NORMAL

- LIGHTING STANDARD: FIXTURES, POLE, AND BASE
- N/A — LAMP POST
- N/A — SITE LIGHTING BOLLARD
- N/A — IN–GROUND FIXTURE
- N/A — AIMED IN–GROUND FIXTURE
- N/A — EXTERIOR RECESSED ACCENT FIXTURE
- N/A — EXTERIOR SURFACE MOUNTED ACCENT FIXTURE
- N/A — EXTERIOR SEMI–RECESSED ACCENT FIXTURE
- N/A — EXTERIOR DOWNLIGHT FIXTURE
- N/A — EXTERIOR MONOPOINT FIXTURE

## GARAGE LIGHTING

CIRCUITS: EMERGENCY / NORMAL

- GARAGE FIXTURES
- ONE–WAY SHIELDED GARAGE FIXTURE
- TWO–WAY SHIELDED GARAGE FIXTURE
- THREE–WAY SHIELDED GARAGE FIXTURE
- FOUR–WAY SHIELDED GARAGE FIXTURE

## LIGHTING SWITCHES AND CONTROLS

- a — LOWER–CASE LETTER NEAR SWITCH DENOTES CIRCUIT CONTROLLED (TYP)
- $ — SINGLE POLE SWITCH
- $2 — DOUBLE POLE SWITCH
- $3 — 3–WAY SWITCH
- $4 — 4–WAY SWITCH
- $K — KEY OPERATED SWITCH
- $P — SWITCH WITH PILOT LIGHT
- DIMMER SWITCH
- $O — OCCUPANCY SENSOR SWITCH
- OS — CEILING MOUNTED OCCUPANCY SENSOR SWITCH
- $PC — PHOTOCELL SWITCH
- PC — PHOTOCELL CONTROL
- PS — PHOTO SENSOR CONTROL
- CS 1 — CONTROL STATION, # INDICATES STATION IDENTIFICATION
- DSC — DIMMING SYSTEM CONTROLS
- $LV — MOMENTARY CONTACT, LOW VOLTAGE SWITCH
- R — RELAY, NEC CLASS II
- T — LOW VOLTAGE TRANSFORMER

## CIRCUITS

- RACEWAY CONCEALED IN CEILING OR WALL. HASH MARKS INDICATE NUMBER OF WIRES. #12 AWG WIRE UNLESS OTHERWISE NOTED. THREE WIRES IF NO HASH MARK SHOWN. EXPOSED RACEWAY IS ALLOWED ONLY WHERE NOTED.
- HOT (SHORT HASH MARK)
- NEUTRAL (LONG HASH MARK)
- GROUND WIRE (JOGGED HASH MARK)
- EXISTING RACEWAY (IF HASH MARKS ARE SHOWN, PULL NEW CONDUCTORS)
- RACEWAY BELOW SLAB OR UNDERGROUND
- RACEWAY UP
- RACEWAY DOWN
- RACEWAY STUB–OUT WITH BUSHING
- CIRCUIT CONTINUATION
- HOME RUN TO PANEL OR LOCATION NOTED
- J — JUNCTION BOX
- PB — PULL BOX

## RECEPTACLES

CIRCUITS: EMERGENCY / NORMAL

- SINGLE RECEPTACLE 120V
- DUPLEX RECEPTACLE 120V
- DOUBLE DUPLEX RECEPTACLE 120V
- SPLIT WIRED RECEPTACLE, 120V, TOP SWITCHED
- N/A — RECEPTACLE 208V OR 240V, SINGLE PHASE
- N/A — RECEPTACLE 208V OR 240V, THREE PHASE
- N/A — COMBINATION RECEPTACLE 120/208V OR 120/240V, SINGLE PHASE
- N/A — RECEPTACLE 480V, SINGLE PHASE
- N/A — RECEPTACLE 480V, THREE PHASE
- SINGLE RECEPTACLE 120V (TWIST LOCK)
- DUPLEX RECEPTACLE 120V (TWIST LOCK)
- N/A — RECEPTACLE 208V OR 240V, SINGLE PHASE (TWIST LOCK)
- N/A — RECEPTACLE 208V OR 240V, THREE PHASE (TWIST LOCK)
- N/A — COMBINATION RECEPTACLE 120/208V OR 120/240V, SINGLE PHASE (TWIST LOCK)
- N/A — RECEPTACLE 480V, SINGLE PHASE (TWIST LOCK)
- N/A — RECEPTACLE 480V, THREE PHASE (TWIST LOCK)
- N/A — CLOCK RECEPTACLE 120V
- N/A — FLOOR BOX, POKE THROUGH (DEVICES AS INDICATED)
- SINGLE RECEPTACLE, CEILING MOUNTED
- DUPLEX RECEPTACLE, CEILING MOUNTED
- DOUBLE DUPLEX RECEPTACLE, CEILING MOUNTED
- CEILING CORD DROP, 120V, SINGLE PHASE
- N/A — POWER POLE
- N/A — MULTI–OUTLET ASSEMBLY (DEVICES AS INDICATED)
- DUPLEX RECEPTACLE, SURGE PROTECTOR TYPE
- DOUBLE DUPLEX RECEPTACLE, SURGE PROTECTOR TYPE

## RECEPTACLE TYPES

- I — ISOLATED GROUND
- S — SAFETY
- G — GROUND FAULT CIRCUIT INTERRUPTER
- GS — GROUND FAULT CIRCUIT INTERRUPTER AND SAFETY
- WP — GROUND FAULT CIRCUIT INTERRUPTER WITH WATER–RESISTANT COVER
- D — DEDICATED CIRCUIT
- AC — MOUNTED 3" ABOVE COUNTER BACKSPLASH

## CONTROLS

- F — FUSED DISCONNECT SWITCH (FUSE RATING INDICATED)
- C — ENCLOSED CIRCUIT BREAKER
- DISCONNECT SWITCH
- V — VARIABLE FREQUENCY DRIVE
- B — BUSWAY PLUG
- MOTOR STARTER
- MANUAL MOTOR STARTER
- COMBINATION MOTOR STARTER DISCONNECT SWITCH
- ENCLOSED CIRCUIT BREAKER
- T — THERMOSTAT
- TC — TIME CLOCK
- CONTACTOR
- R — RELAY, CONTROL TYPE
- PUSH BUTTON CONTROL STATION
- AUTO DOOR PUSHPLATE
- EMERGENCY SHUTDOWN
- $M — MOTOR RATED TOGGLE SWITCH
- VFD — VARIABLE FREQUENCY DRIVE
- DDC — DIRECT DIGITAL CONTROL PANEL

## SHEET INDEX


E0.1 SYMBOLS AND ABBREVIATIONS
E0.2 LIGHTING FIXTURE AND CONTROLS SCHEDULES
E0.3 TITLE 24
E0.4 TITLE 24
E1.01 ELECTRICAL SITE PLAN
E2.01 B3 AND B2 LEVEL LIGHTING PLANS
E2.02 B1 AND P1 LEVEL LIGHTING PLANS
E2.03 P2 AND P3 LEVEL LIGHTING PLANS
E2.04 P4 AND P5 LEVEL LIGHTING PLANS
E2.05 P6 AND P7 LEVEL LIGHTING PLANS
E3.01 B3 AND B2 LEVEL POWER AND SYSTEMS PLANS
E3.02 B1 AND P1 LEVEL POWER AND SYSTEMS PLANS
E3.03 P2 AND P3 LEVEL POWER AND SYSTEMS PLANS
E3.04 P4 AND P5 LEVEL POWER AND SYSTEMS PLANS
E3.05 P6 AND P7 LEVEL POWER AND SYSTEMS PLANS
E4.01 ENLARGED PLANS
E5.01 SINGLE LINE DIAGRAM AND VOLTAGE DROP SCHEDULE
E6.01 PANEL SCHEDULES
E7.01 DETAILS


## WORK DEFINITION

- FLAG NOTE
- REVISION IDENTIFICATION
- EQUIPMENT IDENTIFICATION
- EQUIPMENT IDENTIFICATION
- Det# / Sheet# — DETAIL REFERENCE
- Det# / PlanSheet# / DetSheet# — DETAIL REFERENCE W/ORIGINATING SHEET REFERENCE
- Sec# / Sheet# — SECTION REFERENCE
- Sec# / PlanSheet# / DetSheet# — SECTION REFERENCE W/ORIGINATING SHEET REFERENCE
- 1 / Elev# / Sheet# — ELEVATION REFERENCE
- PROJECT NORTH REFERENCE
- True North — PROJECT NORTH REFERENCE W/TRUE NORTH REFERENCE
- NEW WORK
- EXISTING
- FUTURE
- xxxx — REMOVE EXISTING ELECTRICAL EQUIPMENT

## GENERAL NOTES

1. COMPLY WITH THE CALIFORNIA ELECTRICAL CODE "CEC 2010" AS ADOPTED AND AMENDED BY THE LOCAL AUTHORITY HAVING JURISDICTION.
2. THE LOCATIONS OF ELECTRICAL DEVICES OR LIGHTING FIXTURES INDICATED ON ARCHITECTURAL PLANS ELEVATIONS OR SECTIONS TAKE PRECEDENCE OVER LOCATIONS INDICATED ON THE ELECTRICAL DRAWINGS.
3. FOR LIGHTING CONTROLS WHICH INCLUDE DAYLIGHT OR OCCUPANT SENSING AUTOMATIC CONTROLS, AUTOMATIC SHUT–OFF CONTROLS, OCCUPANCY SENSORS, OR AUTOMATIC TIME SWITCHES THE LIGHTING CONTROLS SHALL BE TESTED TO ENSURE THAT CONTROL DEVICES, COMPONENTS, EQUIPMENT, AND SYSTEMS ARE CALIBRATED, ADJUSTED, AND OPERATE IN ACCORDANCE WITH PROJECT PLANS AND SPECIFICATIONS. SEQUENCE OF OPERATION SHALL ALSO BE FUNCTIONALLY TESTED TO ENSURE IT IS OPERATING IN ACCORDANCE WITH PROJECT PLANS AND SPECIFICATIONS. A COMPLETE REPORT OF TEST PROCEDURES AND RESULTS SHALL BE PREPARED AND FILED WITH THE OWNER.
4. NOT ALL SYMBOLS AND ABBREVIATIONS SHOWN ARE USED IN THIS PROJECT.

## ABBREVIATIONS

| | |
|---|---|
| ABV | ABOVE |
| AC | 3" ABOVE COUNTER BACKSPLASH |
| ACH | ABOVE COUNTER HEIGHT |
| AFF | ABOVE FINISHED FLOOR |
| AG | ABOVE GRADE |
| A,AMP | AMPERE |
| A/V | AUDIO/VISUAL |
| ATS | AUTOMATIC TRANSFER SWITCH |
| AWG | AMERICAN WIRE GAUGE |
| CATV | COMMUNITY ACCESS TELEVISION |
| CB | CIRCUIT BREAKER |
| CCTV | CLOSET CIRCUIT TELEVISION |
| CKT | CIRCUIT |
| CLG | CEILING |
| CM | CEILING MOUNTED |
| COMM | COMMUNICATIONS |
| C | CONDUIT |
| CO | CONDUIT ONLY |
| CU | COPPER |
| D | DATA |
| DED | DEDICATED |
| DN | DOWN |
| DW | DISHWASHER |
| EG | GROUND |
| EWC | ELECTRIC WATER COOLER |
| FA | FIRE ALARM |
| FB | FLOOR BOX |
| FBOIC | FURNISHED BY OTHERS, INSTALLED BY CONTRACTOR |
| FI | FILM ILLUMINATOR |
| FO | FIBER OPTIC(AL) |
| FOC | FACE OF COLUMN |
| G,GND | GROUND |
| GD | GARBAGE DISPOSAL |
| GFI,GFCI | GROUND FAULT CIRCUIT INTERRUPTER |
| HH | HAND HOLE |
| HP | HORSEPOWER |
| IDF | INTERMEDIATE DISTRIBUTION FRAME/FACILITY |
| IH | INSTA–HOT WATER DISPENSER |
| J–BOX | JUNCTION BOX |
| MCC | MOTOR CONTROL CENTER |
| MDF | MAIN DISTRIBUTION FRAME/FACILITY |
| MH | MANHOLE |
| MM | MULTI–MODE |
| MTD | MOUNTED |
| MW | MICROWAVE |
| N | NEUTRAL |
| NIC | NOT IN CONTRACT |
| NL | NIGHT LIGHT |
| OPOI | OWNER PROVIDED OWNER INSTALLED |
| PB | PULLBOX |
| PNL | PANEL, PANELBOARD |
| POS | POINT OF SALE |
| PR | PAIR |
| PTS | PNEUMATIC TUBE STATION |
| R | RACEWAY |
| RO | RACEWAY ONLY |
| RECEPT | RECEPTACLE |
| REF | REFRIGERATOR |
| SFD | SMOKE FIRE DAMPER |
| SLV | SLEEVE |
| SM | SINGLE MODE |
| SPECS | SPECIFICATIONS |
| SW | SWITCH |
| SWBD | SWITCHBOARD |
| TELECOM | TELECOMMUNICATIONS |
| TGB | TELECOMMUNICATIONS GROUNDING BUSBAR |
| TMGB | TELECOMMUNICATIONS MAIN GROUNDING BUSBAR |
| TSER | TELECOMMUNICATIONS SERVICE ENTRANCE ROOM |
| TV | TELEVISION |
| TYP | TYPICAL |
| UF | UNDER FLOOR |
| UG | UNDER GROUND |
| UON | UNLESS OTHERWISE NOTED |
| UTP | UNSHIELDED TWISTED PAIR |
| V | VOLT OR VOICE–COMM |
| VEL | VERIFY EXACT LOCATION |
| W | WIRE, WATT, OR WALL–COMM |
| WAP | WIRELESS ACCESS POINT |
| WP | WEATHERPROOF |
| XFMR | TRANSFORMER |
| ø | PHASE |


**County of San Diego**
**Cedar & Kettner**
**Development Project**
San Diego, California

McCARTHY
20401 S.W. BIRCH STREET SUITE 300
Newport Beach, California 92660

Architect
IPD
Alameda
Irvine
Los Angeles
Architecture / Engineering / Consulting
www.ipd-global.com
2 Faraday, Suite 101, Irvine CA 92618
Phone 949 595 8004 Fax 949 595 8011

SPARLING
WORK TOGETHER | STAND APART™
9191 Towne Centre Drive, Suite 220
San Diego, California 92122
858-622-2700 800-667-0610
www.sparling.com

REGISTERED PROFESSIONAL ENGINEER PAUL K. ERICSON No. 11219 exp.06/30/2015 ELECTRICAL STATE OF CALIFORNIA


| Revision | Date |
|---|---|
| 100% DESIGN DEVELOPMENT | 10/23/2013 |
| 90% CDs - 1ST PLAN CHECK | 12/24/2013 |
| 2ND PLAN CHECK | 04/23/14 |

| | |
|---|---|
| Date | |
| IPD Job No. | 13-813 |
| Drawn By | SPARLING |
| Checked By | LGR/PKE |
| Scale | AS NOTED |

CONSTRUCTION DOCUMENTS

Drawing Title
SYMBOLS AND ABBREVIATIONS

Drawing No.
**E0.1**


T:\B1813\CAD–BIM\E01 Apr 22, 2014 8:43 AM By:EALVAREZ
IPD, Inc.

## Cedar & Kettner Parking

12/10/2013
Feed Thru
Main/Type

### LCP

| Relay Number | Controlled Circuit | Load Description | (N)on or (E)mer | Control Inputs: Time Clock | Control Inputs: Photo Cell (daylight) | Control Inputs: LV override | Relay Rating/ Poles | Relay Volts | Total Load VA | Key Note Ref. |
|---|---|---|---|---|---|---|---|---|---|---|
| 1 | LA-29 | Site Lighting | N | TC2 | PCa | LV-1 | 20A/1P | 277V | 330 | 1 |
| 2 | ELA-11 | P1 Level - Building Exterior & P2-P7 Stairs | E | TC2 | PCa | LV-1 | 20A/1P | 277V | 1212 | 1 |
| 3 | LA-27 | P7 Level - Parking Area | N | TC2 | PCa | LV-1 | 20A/1P | 277V | 1212 | 1 |
| 4 | ELA-2 | P7 Level - Parking Area | E | TC2 | PCb | LV-1 | 20A/1P | 277V | 929 | 1 |
| 5 | | Spare | N | | | | | | | |
| 6 | | Spare | N | | | | | | | |
| 7 | | Spare | N | | | | | | | |
| 8 | | Spare | N | | | | | | | |
| 9 | | Spare | N | | | | | | | |
| 10 | | Spare | N | | | | | | | |
| 11 | | Spare | N | | | | | | | |
| 12 | | Spare | N | | | | | | | |

**LIGHTING CONTROL GENERAL NOTES:**

A VERIFY ALL TIME CLOCK FUNCTIONS WITH OWNERS REPRESENTATIVE.
B PROVIDE PHYSICAL BARRIER WITHIN RELAY CABINET BETWEEN NORMAL AND EMERGENCY RELAYS / MODULES.
C FOR PHYSICAL LOCATION OF LV OVERRIDE CONTROLS, SEE LIGHTING PLANS E1.01 AND E2.05
D PROVIDE ASTRONOMICAL, 365 DAY, HOLIDAY PROGRAMMABLE EC APPROVED MULTI-CHANNEL, MULTI-FUNCTION TIME CLOCK.
E PROVIDE MINIMUM OF (10) SPARE RELAYS.

D.L.Z = DAY LIGHT ZONE: AUTOMATIC DIMMING FROM PHOTOCELL INPUT.

**LIGHTING CONTROL KEY NOTES:**

1 TIME CLOCK PROGRAMMING SHALL BE DONE IN CONJUNCTION WITH OWNER INPUT

TIME CLOCK FUNCTIONS

| Name | On | Off |
|---|---|---|
| TC1 | 0:00 | 23:59 |
| TC2 | 17:00 | 23:00 |
| TC3 | 0:00 | 23:59 |
| TC4 | 0:00 | 23:59 |

LV OVERRIDE FUNCTIONS

| Name | Function |
|---|---|
| LV1 | 2HR ON |
| LV2 | 2HR ON |
| | |
| | |

## LIGHTING FIXTURE SCHEDULE

| TYPE | DESCRIPTION | MANUFACTURER | LAMP # | LAMP | INPUT WATTS | INPUT VOLT* | COMMENTS |
|---|---|---|---|---|---|---|---|
| F01 | SURFACE MOUNTED LENSED FLUORESCENT WITH HIGH IMPACT ACRYLIC DIFFUSER, NOMINAL 8" WIDE X 5-1/2" DEEP X 50" LONG. IMPACT-RESISTANT, UV-RESISTANT FIBERGLASS REINFORCED POLYESTER HOUSING. HIGH IMPACT RESISTANT DR ACRYLIC DIFFUSER SECURED TO FULLY GASKETED HOUSING BY CAPTIVE, CORROSION AND TAMPER-RESISTANT LATCHES. U.L. LISTED FOR WET LOCATION. PROVIDE ONE (2) LAMP ELECTRONIC PROGRAM START BALLAST. | LITHONIA (DMW SERIES) | 2 | F32T8/ADV835/ALTO | 58 | 277 | |
| F01A | SIMILAR TO TYPE F01 EXCEPT PROVIDE ONE (2) LAMP ELECTRONIC DIMMING BALLAST. | | | | | | AUTOMATICALLY DIMMED BY PHOTOCELL. |
| F02 | SURFACE MOUNTED LINEAR FLUORESCENT STRIP. TWO LAMP CROSS SECTION. NOMINALLY 4 1/8" WIDE X 3 3/4" HIGH X 4' LONG. MULTI-STAGE PHOSPHATE TREATED HOUSING. HIGH REFLECTANCE BAKED WHITE ENAMEL FINISH. PROVIDE ONE (2) LAMP ELECTRONIC PROGRAM START BALLAST. PROVIDE WIRE GUARD. UL LISTED DAMP LOCATION. | LITHONIA (C SERIES) | 2 | F32T8/ADV835/ALTO | 58 | 277 | |
| F03 | DECORATIVE WALL MOUNT COMPACT FLUORESCENT WALL PACK. MEDIUM THROW DISTRIBUTION. NOMINALLY 16 1/4" LONG X 9 1/8"WIDE X 7 1/4" HIGH. MANUFACTURER'S STANDARD FINISH AS SELECTED BY ARCHITECT. ONE ELECTRONIC RAPID START BALLAST. SINGLE CIRCUIT. | LITHONIA (WST SERIES) | 2 | CFTR32WGX24Q/830 | 68 | 277 | |
| F04 | RECESSED MOUNTED LINEAR FLUORESCENT. NOMINALLY 4" WIDTH X 3 1/2" DEPTH X 4' LENGTH. SATIN LENS. MANUFACTURER'S STANDARD FINISH AS SELECTED BY ARCHITECT. ONE ELECTRONIC RAPID START BALLAST. SINGLE CIRCUIT. | AXIS (WET BEAM 4 SERIES) | 2 | F32T8/ADV835/ALTO | 58 | 277 | |
| F05 | RECESSED LENSED TROFFER NOMINAL 24" X 48" X 5", FLUSH STEEL DOOR WITH MITERED CORNERS, ENCLOSED POSITIVE CAM ACTION LATCHES AND .125" VIRGIN ACRYLIC PRISMATIC LENS. ONE ELECTRONIC PROGRAM START BALLAST. | LITHONIA (2SP8 SERIES) | 3 | F32T8/ADV835/ALTO | 93 | 277 | |
| F06 | 6" RECESSED COMPACT FLUORESCENT DOWNLIGHT WITH HORIZONTAL LAMP. MINIMUM RECESS DEPTH 6". MAXIMUM RECESS DEPTH 6-5/8". CLEAR SEMI-SPECULAR ALZAK PARABOLIC CONE. SELF-FLANGED OVERLAP TRIM. LOW-IRIDESCENT FINISH. CLEAR LENS FIXED TO LOWER REFLECTOR CONE. ELECTRONIC PROGRAM START BALLAST. | GOTHAM LIGHTING (AF1/32TRT SERIES) | 1 | CFTR32WGX24Q/830 | 33 | 277 | |
| L01 | SURFACE-MOUNTED LED STEPLIGHT. FIVE LED WHITE HIGH OUTPUT LIGHT DISTRIBUTION PATTERN DIE-CAT HOUSING CONSTRUCTION WITH SOLID STAILESS STEEL FACEPLATE. LUMINAIRE IS MOUUNTED TO A STEEL CITY 'CX' SERIES OR EQUIVALENT JUNCTION BOX (BY OTHERS) WITH TWO EXPOSED FASTENERS. INTEGRAL DRIVER AVAILABLE FOR 120-277V NON DIMMING VERSION. RECESSED SURFACES HAVE A RIBBED DESIGN WITH MATTE BLACK FINISH TO REDUCE GLARE. FACEPLATES IN NATURAL METAL FINISHES HAVE PROTECTIVE CLEAR TOP COAT. ETL LISTED: UL LISTED FOR WET LOCATION. | WINONA LIGHTING (STEP 11 RECTANGLE SERIES) | | FIVE WHITE LED/3000K | 11 | 277 | MOUNT AT 30" |
| L02 | EXTERIOR SURFACE WALL MOUNT FIXTURE. ONE PIECE DIE CAST ALUMINUM BODY WITH MOUNTING PLATE MACHINED FOR DIRTECT ATTACHED TO SURFACE OVER JUNCTION BOX. 3/16" MOLDED GLASS REFLECTOR WITH INTERNAL STRUCTURE AND TRANSLUCENT WHITE CERAMIC COATING. FRAME SECURED BY THREE STAINLESS STEEL CPATIVE SCREWS. FULLY GASKETED WITH MOLDED SILICONE RUBBER U CHANNEL GASKET. CSA LISTED FOR WET LOCATIONS, IP65 RATING. | BEGA (3137 LED SERIES) | | 26W - LED - WHITE - 3000K INTEGRAL TO FIXTURE, 1023 LUMENS, MINIMUM 80 CRI | 30 | 277 | |
| L03 | EXTERIOR LED POLE LIGHT. ONE PIECE DIE-CAST ALUMINUM OPTICAL HOUSING WITH INTEGRALLY CAST TRANSITION FITTER. SLIP FITS A 3" OD POLE TOP. SECURED WITH SIX (6) FLUSH. STAINLESS STEEL SET SCREWS. HOUSING SUPPORTS TWO (2) 3/4" DIAMETER STAINLESS STEEL STRUTS AT 180 DEGREES. DIE-CAST ALUMINUM DIFFUSER RETAINING RING SUPPORTED BY STRUTS. LED ENCLOSURE IS 3/4" THICK MACHINED TEMPERED CRYSTAL CLEAR OPTICAL GLASS WITH ONE-PIECE MOLDED SILICONE RUBBER GASKET. WIDE FLOOD DISTRIBUTION REFLECTOR. MANUFACTURER'S STANDARD FINISH AS SELECTED BY ARCHITECT. UL LISTED FOR WET LOCATION, IP65 RATING. | BEGA (7210LED SERIES) | | 58W - LED - WHITE - 3000K INTEGRAL TO FIXTURE, 1957 LUMENS, MINIMUM 80 CRI | 66 | 277 | PROVIDE 14' 3" DIAMETER ROUND O.D. POLE. |
| M01 | EXTERIOR POLE AND SINGLE CUT-OFF STYLE METAL HALIDE FIXTURE. RUGGED, DIE-CAST, SINGLE PIECE ALUMINUM HOUSING WITH NOMINAL WALL THICKNESS OF 1/8". DIE CAST DOOR FRAME HAS IMPACT-RESISTANT, TEMPERED, GLASS LENS (3/16" THICK) DOOR FRAME IS FULLY GASKETED WITH ONE-PIECE TUBULAR SILICONE. STANDARD FINISH IS DARK BRONZE POLYESTER POWDER FINISH. ANODIZED SEGMENTED REFLECTORS FOR SUPERIOR UNIFORMITY AND CONTROL. HIGH REACTANCE BALLAST, HIGH POWER FACTOR WITH PULSE-START IGNITOR TECHNOLOGY. ALL BALLASTS ARE MOUNTED ON A REMOVABLE POWER TRAY. INTEGRAL ARM FOR POLE OR WALL MOUNTING. UL LISTED FOR 25 C AMBIENT AND WET LOCATIONS. IP65 RATED. | LITHONIA (AERIS AS1 SERIES) | 2 | MHC150/U/M/3K/ALTO | 370 | 277 | PROVIDE 17" ROUND STRAIGHT STEEL POLE FOR OVERALL MOUNTING HEIGHT OF 20'-0" AFF. |
| M02 | SIMILAR TO TYPE M01 EXCEPT THREE HEAD POLE. | | 3 | | 555 | | PROVIDE 17" ROUND STRAIGHT STEEL POLE FOR OVERALL MOUNTING HEIGHT OF 20'-0" AFF. |
| X01 | UNIVERSAL MOUNTED SINGLE FACE LED EXIT SIGN. DIECAST ALUMINUM HOUSING AND CANOPY, UNIVERSAL ARROWS WITH CLOSED CELL GASKET. VANDAL-RESISTANT POLYCARBONATE FACEPLATE AND STAINLESS STEEL, TAMPER-RESISTANT SPANNER HEAD SCREWS. WHITE HOUSING. U.L WET LISTED. RATED LAMP LIFE SHALL BE 20 YEARS MINIMUM. CHEVRONS AS INDICATED ON PLANS. | LITHONIA (LQC SERIES) | | LED (GREEN). INTEGRAL TO FIXTURE | 3 | 277 | |

County of San Diego
Cedar & Kettner
Development Project
San Diego, California

McCARTHY
20401 S.W. BIRCH STREET SUITE 300
Newport Beach, California 92660

Architect
Alameda
Irvine
Los Angeles
IPD
Architecture / Engineering / Consulting
www.ipd-global.com
2 Faraday, Suite 101, Irvine CA 92618
Phone 949 595 8004 Fax 949 595 8011

SPARLING
WORK TOGETHER | STAND APART™
9191 Towne Centre Drive, Suite 220
San Diego, California 92122
858-622-2700 800-667-0610
www.sparling.com

REGISTERED PROFESSIONAL ENGINEER
PAUL K. ERICSON
No. 11219
EXP. 06/30/2014
CIVIL
STATE OF CALIFORNIA

| Revision | Date |
|---|---|
| 100% DESIGN DEVELOPMENT | 10/23/2013 |
| 90% CDs - 1ST PLAN CHECK | 12/24/2013 |
| 2ND PLAN CHECK | 04/23/14 |

| | |
|---|---|
| Date | |
| IPD Job No. | 13-813 |
| Drawn By | SPARLING |
| Checked By | LGR/PKE |
| Scale | AS NOTED |

CONSTRUCTION DOCUMENTS

Drawing Title
LIGHTING FIXTURE AND CONTROLS SCHEDULES

Drawing No.
E0.2

T:\3/813/3\CAD-BIM\E02 Apr 22, 2014 8:43 AM By:EALVAREZ
IPD, Inc.

## CERTIFICATE OF COMPLIANCE (Part 1 of 4) LTG-1C

| Project Name | | | Date |
|---|---|---|---|
| County of San Diego Cedar & Kettner Development Project | | | 12/20/2013 |
| **Project Address** | **Climate Zone** | **Total Cond. Floor Area** | **Unconditioned Floor Area** |
| Cedar & Kettner San Diego | 7 | 4,051 | 214,493 |

**GENERAL INFORMATION**

| | | | |
|---|---|---|---|
| Building Type: | ☑ Nonresidential | ☐ High-Rise Residential | ☐ Hotel/Motel Guest Room |
| ☐ School | ☐ Relocatable Public School | ☑ Conditioned Spaces | ☑ Unconditioned Spaces |
| Phase of Construction: | ☑ New Construction | ☐ Addition | ☐ Alteration |
| Method of Compliance: | ☐ Complete Building | ☑ Area Category | ☐ Tailored |

**Documentation Author's Declaration Statement**

I certify that this Certificate of Compliance documentation is accurate and complete.

| | |
|---|---|
| Name: Laura Ramirez | Signature |
| Company: Sparling | Date: 12/20/2013 |
| Address: 9191 Towne Centre Dr. Suite 220 | CEA # <br> CEPE # |
| City/State/Zip: San Diego, CA 92122 | Phone: 858-622-2700 |

**The Principal Lighting Designer's Declaration Statement**

- I am eligible under Division 3 of the California Business and Professional Code to accept responsibility for the lighting design.
- This Certificate of Compliance identifies the lighting features and performance specifications required for compliance with Title 24, Pages 1 and 6 of the California Code of Regulations.
- The design features represented on this Certificate of Compliance are consistent with the information provided to document this design on the other applicable compliance forms, worksheets, calculations, plans and specifications submitted to the enforcement agency for approval with this building permit application.

| | |
|---|---|
| Name: Paul Ericson | Signature |
| Company: Sparling, Inc | Phone: 858-622-2700 |
| Address: 9191 Towne Centre Drive Suite 220 | License #: 11219 |
| City/State/Zip: San Diego, CA 92122 | Date: 11/15/2013 |

**Lighting Mandatory Measures**
Indicate location on building plans of Mandatory Measures Note Block: ____________________

**LIGHTING COMPLIANCE FORMS & WORKSHEETS (check box if worksheets is included)**

For detailed instructions on the use of this and all Energy Efficiency Standards compliance forms; please refer to the Nonresidential Manual published by the California Energy Commission.

| | | |
|---|---|---|
| ☑ | LTG-1C Pages 1 through 4 | Certificate of Compliance. All Pages required on plans for all submittals. |
| ☑ | LTG-2C | Lighting Controls Credit Worksheet |
| ☑ | LTG-3C | Indoor Lighting Power Allowance |
| ☐ | LTG-4C Pages 1 through 4 | Tailored Method Worksheet |
| ☐ | LTG-5C Pages 1 and 2 | Line Voltage Track Lighting Worksheet |



## CERTIFICATE OF COMPLIANCE (Part 2 of 4) LTG-1C

Project Name: County of San Diego Cedar & Kettner Development Project — Date: 12/20/2013

**INDOOR LIGHTING SCHEDULE and FIELD INSPECTION ENERGY CHECKLIST**

**Installation Certificate, LTG-1- INST** (Retain a copy and verify form is completed and signed.) — **Field Inspector** ☐

**Certificate of Acceptance, LTG-2A and LTG-3A** (Retain a copy and verify form is completed and signed.) — **Field Inspector** ☐

A separate Lighting Schedule Must Be Filled Out for Conditioned and Unconditioned Spaces Installed Lighting Power listed on this Lighting Schedule is only for:

☑ CONDITIONED SPACE ☐ UNCONDITIONED SPACE

☑ The actual indoor lighting power listed below includes all installed permanent and portable lighting systems in accordance with §146(a).

☑ Only for offices: Up to the first 0.2 watts per square foot of portable lighting shall not be required to be included in the calculation of actual indoor lighting power density in accordance with the Exception to §146(a). All portable lighting in excess of 0.2 watts per square foot is totaled below.

| A: None or Item Tag | B: Complete Luminaire Description[1] (i.e, 3 lamp fluorescent troffer, F32T8, one dimmable electronic ballasts) | C | D: Watts per Luminaire[1] | E: CEC Default From NA8 | E: According To §130 (d or e) | F: Number of Luminaires | G: Installed Watts (D X F) | H: Field Inspector[2] Pass | H: Fail |
|---|---|---|---|---|---|---|---|---|---|
| F01 | F01 - (2) 4 ft Fluorescent T8 - Lensed | | 58.0 | ☑ | ☐ | 2 | 116 | ☐ | ☐ |
| F02 | F02 - (2) 4 ft Fluorescent T8 XLL - Strip | | 58.0 | ☑ | ☐ | 43 | 2,494 | ☐ | ☐ |
| F05 | F05 - (3) 4 ft Fluorescent T8 - Lensed | | 93.0 | ☑ | ☐ | 2 | 186 | ☐ | ☐ |
| F06 | F06 - (1) 32w Compact Fluorescent Triple - WallPack | | 36.0 | ☑ | ☐ | 2 | 72 | ☐ | ☐ |
| | | | | ☐ | ☐ | | | ☐ | ☐ |
| | | | | ☐ | ☐ | | | ☐ | ☐ |
| | | | | ☐ | ☐ | | | ☐ | ☐ |
| | | | | ☐ | ☐ | | | ☐ | ☐ |
| | | | | ☐ | ☐ | | | ☐ | ☐ |
| | | | | ☐ | ☐ | | | ☐ | ☐ |
| | | | | ☐ | ☐ | | | ☐ | ☐ |
| | | | | ☐ | ☐ | | | ☐ | ☐ |
| | | | | ☐ | ☐ | | | ☐ | ☐ |
| | | | | ☐ | ☐ | | | ☐ | ☐ |
| | | | | ☐ | ☐ | | | ☐ | ☐ |
| | | | | ☐ | ☐ | | | ☐ | ☐ |
| | | | | ☐ | ☐ | | | ☐ | ☐ |
| | | | | ☐ | ☐ | | | ☐ | ☐ |
| | | | | ☐ | ☐ | | | ☐ | ☐ |
| | | | | ☐ | ☐ | | | ☐ | ☐ |

Installed Watts Page Total: 2,868

Building total number of pages: — Installed Watts Building Total (Sum of all pages) Enter into LTG-1C Page 4 of 4: 2,868

1. Wattage shall be determined according to Section 130 (d and e). Wattage shall be rating of light fixture, not rating of bulb.
2. If Fail then describe on Page 2 of the Inspection Checklist Form and take appropriate action to correct. Verify building plans if necessary.



## CERTIFICATE OF COMPLIANCE (Part 2 of 4) LTG-1C

Project Name: County of San Diego Cedar & Kettner Development Project — Date: 12/20/2013

**INDOOR LIGHTING SCHEDULE and FIELD INSPECTION ENERGY CHECKLIST**

**Installation Certificate, LTG-1- INST** (Retain a copy and verify form is completed and signed.) — **Field Inspector** ☐

**Certificate of Acceptance, LTG-2A and LTG-3A** (Retain a copy and verify form is completed and signed.) — **Field Inspector** ☐

A separate Lighting Schedule Must Be Filled Out for Conditioned and Unconditioned Spaces Installed Lighting Power listed on this Lighting Schedule is only for:

☐ CONDITIONED SPACE ☑ UNCONDITIONED SPACE

☑ The actual indoor lighting power listed below includes all installed permanent and portable lighting systems in accordance with §146(a).

☑ Only for offices: Up to the first 0.2 watts per square foot of portable lighting shall not be required to be included in the calculation of actual indoor lighting power density in accordance with the Exception to §146(a). All portable lighting in excess of 0.2 watts per square foot is totaled below.

| A: None or Item Tag | B: Complete Luminaire Description[1] (i.e, 3 lamp fluorescent troffer, F32T8, one dimmable electronic ballasts) | C | D: Watts per Luminaire[1] | E: CEC Default From NA8 | E: According To §130 (d or e) | F: Number of Luminaires | G: Installed Watts (D X F) | H: Field Inspector[2] Pass | H: Fail |
|---|---|---|---|---|---|---|---|---|---|
| F01 | F01 - (2) 4 ft Fluorescent T8 - Lensed | | 58.0 | ☑ | ☐ | 320 | 18,560 | ☐ | ☐ |
| F01A | F01A - (2) 4 ft Fluorescent T8 Dimming | | 58.0 | ☑ | ☐ | 75 | 4,350 | ☐ | ☐ |
| F04 | F04 - (2) 4 ft Fluorescent T8 - Lensed | | 58.0 | ☑ | ☐ | 2 | 116 | ☐ | ☐ |
| L01 | L01 11W LED Steplight | | 11.0 | ☑ | ☐ | 9 | 99 | ☐ | ☐ |
| M01 | M01 (2) 150w Metal Halide Pole | | 370.0 | ☑ | ☐ | 2 | 740 | ☐ | ☐ |
| M02 | M02 (3) 150w Metal Halide Pole | | 555.0 | ☑ | ☐ | 1 | 555 | ☐ | ☐ |
| | | | | ☐ | ☐ | | | ☐ | ☐ |
| | | | | ☐ | ☐ | | | ☐ | ☐ |
| | | | | ☐ | ☐ | | | ☐ | ☐ |
| | | | | ☐ | ☐ | | | ☐ | ☐ |
| | | | | ☐ | ☐ | | | ☐ | ☐ |
| | | | | ☐ | ☐ | | | ☐ | ☐ |
| | | | | ☐ | ☐ | | | ☐ | ☐ |
| | | | | ☐ | ☐ | | | ☐ | ☐ |
| | | | | ☐ | ☐ | | | ☐ | ☐ |
| | | | | ☐ | ☐ | | | ☐ | ☐ |
| | | | | ☐ | ☐ | | | ☐ | ☐ |
| | | | | ☐ | ☐ | | | ☐ | ☐ |
| | | | | ☐ | ☐ | | | ☐ | ☐ |
| | | | | ☐ | ☐ | | | ☐ | ☐ |

Installed Watts Page Total: 24,420

Building total number of pages: — Installed Watts Building Total (Sum of all pages) Enter into LTG-1C Page 4 of 4: 24,420

1. Wattage shall be determined according to Section 130 (d and e). Wattage shall be rating of light fixture, not rating of bulb.
2. If Fail then describe on Page 2 of the Inspection Checklist Form and take appropriate action to correct. Verify building plans if necessary.



## CERTIFICATE OF COMPLIANCE (Part 3 of 4) LTG-1C

Project Name: County of San Diego Cedar & Kettner Development Project — Date: 12/20/2013

**INDOOR LIGHTING SCHEDULE and FIELD INSPECTION ENERGY CHECKLIST**

Fill in controls for all spaces: a) area controls, b) multi-level controls, c) manual daylighting controls for daylit areas > 250 $ft^2$, automatic daylighting controls for daylit areas > 2,500 $ft^2$, d) shut-off controls, e) display lighting controls, f) tailored lighting controls – general lighting controlled separately from display, ornamental and display case lighting and g) demand responsive automatic controls for retail stores > 50,000 $ft^2$, in accordance with Section 131.

**MANDATORY LIGHTING CONTROLS – FIELD INSPECTION ENERGY CHECKLIST**

| Type/ Description | Number of Units | Location in Building | Special Features | Field Inspector Pass | Field Inspector Fail |
|---|---|---|---|---|---|
| | | | ☐ | ☐ | ☐ |
| | | | ☐ | ☐ | ☐ |
| | | | ☐ | ☐ | ☐ |
| | | | ☐ | ☐ | ☐ |
| | | | ☐ | ☐ | ☐ |
| | | | ☐ | ☐ | ☐ |
| | | | ☐ | ☐ | ☐ |
| | | | ☐ | ☐ | ☐ |
| | | | ☐ | ☐ | ☐ |
| | | | ☐ | ☐ | ☐ |
| | | | ☐ | ☐ | ☐ |
| | | | ☐ | ☐ | ☐ |
| | | | ☐ | ☐ | ☐ |
| | | | ☐ | ☐ | ☐ |
| | | | ☐ | ☐ | ☐ |
| | | | ☐ | ☐ | ☐ |
| | | | ☐ | ☐ | ☐ |
| | | | ☐ | ☐ | ☐ |
| | | | ☐ | ☐ | ☐ |
| | | | ☐ | ☐ | ☐ |
| | | | ☐ | ☐ | ☐ |
| | | | ☐ | ☐ | ☐ |
| | | | ☐ | ☐ | ☐ |
| | | | ☐ | ☐ | ☐ |

**SPECIAL FEATURES INSPECTION CHECKLIST (See Page 2 of 4 of LTG-1C)**

The local enforcement agency should pay special attention to the items specified in this checklist. These items require special written justification and documentation, and special verification. The local enforcement agency determines the adequacy of the justification, and may reject a building or design that otherwise complies based on the adequacy of the special justification and documentation submitted.

**Field Inspector's Notes or Discrepancies:**



## CERTIFICATE OF COMPLIANCE (Part 4 of 4) LTG-1C

Project Name: County of San Diego Cedar & Kettner Development Project — Date: 12/20/2013

**CONDITIONED AND UNCONDITIONED SPACE LIGHTING MUST NOT BE COMBINED FOR COMPLIANCE**

| Indoor Lighting Power for Conditioned Spaces | | Watts | Indoor Lighting Power for Unconditioned Spaces | | Watts |
|---|---|---|---|---|---|
| **Installed** Lighting (from Conditioned LTG-1C, Page 2) | | 2,868 | **Installed** Lighting (from Unconditioned LTG-1C, Page 2) | | 24,420 |
| Lighting Control Credit Conditioned Spaces (from LTG-2C) | - | 0 | Lighting Control Credit Unconditioned Spaces (from LTG-2C) | - | 0 |
| Adjusted **Installed** Lighting Power | = | 2,868 | Adjusted **Installed** Lighting Power | = | 24,420 |
| Complies if **Installed** ≤ **Allowed** | | ↕ | Complies if **Installed** ≤ **Allowed** | | ↕ |
| **Allowed** Lighting Power Conditioned Spaces (from LTG-3C or PERF-1) | | 2,895 | **Allowed** Lighting Power Unconditioned Spaces (from LTG-3C) | | 64,348 |

**Required Acceptance Tests**

### Designer:

This form is to be used by the designer and attached to the plans. Listed below is the acceptance test for the Lighting system, **LTG-2A and LTG-3A**. The designer is required to check the acceptance tests and list all control devices serving the building or space shall be certified as meeting the Acceptance Requirements for Code Compliance. If all the lighting system or control of a certain type requires a test, list the different lighting and the number of systems. The NA7 Section in the Appendix of the Nonresidential Reference Appendices Manual describes the test. Since this form will be part of the plans, completion of this section will allow the responsible party to budget for the scope of work appropriately. **Forms can be grouped by type of Luminaire controlled.**

### Enforcement Agency:

**Systems Acceptance**. Before Occupancy Permit is granted for a newly constructed building or space or when ever new lighting system with controls is installed in the building or space shall be certified as meeting the Acceptance Requirements.
The **LTG-2A and LTG-3A** forms are not considered complete forms and are not to be accepted by the enforcement agency unless the boxes are checked and/or filled and signed. In addition, a Certificate of Acceptance forms shall be submitted to the enforcement agency that certifies plans, specifications, installation certificates, and operating and maintenance information meet the requirements of §10-103(b) of Title 24 Part 6. The field inspector must receive the properly filled out and signed forms before the building can receive final occupancy. A copy of the **LTG-2A and LTG-3A** for each different lighting luminaire control(s) must be provided to the owner of the building for their records.

| Luminaires Controlled: Equipment Requiring Testing | Description | Number of Luminaires controlled | Location | LTG-2A and LTG-3A: Controls and Sensors and Automatic Daylighting Controls Acceptance |
|---|---|---|---|---|
| | | | | ☐ |
| | | | | ☐ |
| | | | | ☐ |
| | | | | ☐ |
| | | | | ☐ |
| | | | | ☐ |
| | | | | ☐ |
| | | | | ☐ |
| | | | | ☐ |
| | | | | ☐ |
| | | | | ☐ |
| | | | | ☐ |
| | | | | ☐ |
| | | | | ☐ |
| | | | | ☐ |
| | | | | ☐ |



## INDOOR LIGHTING POWER ALLOWANCE LTG-3C

Project Name: County of San Diego Cedar & Kettner Development Project — Date: 12/20/2013

**ALLOWED LIGHTING POWER (Chose One Method)**

A Separate LTG-3C must be filled out for Conditioned and Unconditioned Spaces. Indoor Lighting Power Allowances listed on this page are only for:
☑ CONDITIONED SPACES ☐ UNCONDITIONED SPACES

**COMPLETE BUILDING METHOD**

| BUILDING CATEGORY (From §146 Table 146-E) | WATTS PER ($ft^2$) | X | COMPLETE BLDG. AREA | = | ALLOWED WATTS |
|---|---|---|---|---|---|
| | | | | | |
| | | | | | |
| | | | | | |
| | | | | | |
| | | | | | |
| | | | | | |
| | | | | | |
| | | | | | |
| | | | | | |
| | | | | | |
| | | | | | |
| | | | | | |
| | | | | | |
| | | | | | |
| | | | | | |
| | TOTALS | | | | |
| | | | AREA | | WATTS |

**AREA CATEGORY METHOD**

| BUILDING CATEGORY (From §146 Table 146-F) | WATTS PER ($ft^2$) | X | Area $ft^2$ | = | ALLOWED WATTS |
|---|---|---|---|---|---|
| Electrical, Mechanical Room | 0.70 | | 3,738 | | 2,617 |
| Office <= 250 sqft | 1.10 | | 182 | | 200 |
| Corridor/Restroom/Support | 0.60 | | 131 | | 79 |
| | | | | | |
| | | | | | |
| | | | | | |
| | | | | | |
| | | | | | |
| | | | | | |
| | | | | | |
| | | | | | |
| | | | | | |
| | | | | | |
| | | | | | |
| | TOTALS | | 4,051 | | 2,895 |
| | | | AREA | | WATTS |

**TAILORED METHOD**

Total Allowed Watts using the Tailored Method taken from LTG-4C (Page 1 of 4) Row 3: 0

The indoor lighting power allowance using the Tailored Method of compliance shall be determined using the LTG-4C set of forms. A separate set of LTG-4C forms shall be filled out for CONDITIONED and UNCONDITIONED spaces



## INDOOR LIGHTING POWER ALLOWANCE LTG-3C

Project Name: County of San Diego Cedar & Kettner Development Project — Date: 12/20/2013

**ALLOWED LIGHTING POWER (Chose One Method)**

A Separate LTG-3C must be filled out for Conditioned and Unconditioned Spaces. Indoor Lighting Power Allowances listed on this page are only for:
☐ CONDITIONED SPACES ☑ UNCONDITIONED SPACES

**COMPLETE BUILDING METHOD**

| BUILDING CATEGORY (From §146 Table 146-E) | WATTS PER ($ft^2$) | X | COMPLETE BLDG. AREA | = | ALLOWED WATTS |
|---|---|---|---|---|---|
| | | | | | |
| | | | | | |
| | | | | | |
| | | | | | |
| | | | | | |
| | | | | | |
| | | | | | |
| | | | | | |
| | | | | | |
| | | | | | |
| | | | | | |
| | | | | | |
| | | | | | |
| | | | | | |
| | | | | | |
| | TOTALS | | | | |
| | | | AREA | | WATTS |

**AREA CATEGORY METHOD**

| BUILDING CATEGORY (From §146 Table 146-F) | WATTS PER ($ft^2$) | X | Area $ft^2$ | = | ALLOWED WATTS |
|---|---|---|---|---|---|
| Parking Garage | 0.30 | | 214,493 | | 64,348 |
| | | | | | |
| | | | | | |
| | | | | | |
| | | | | | |
| | | | | | |
| | | | | | |
| | | | | | |
| | | | | | |
| | | | | | |
| | | | | | |
| | | | | | |
| | | | | | |
| | TOTALS | | 214,493 | | 64,348 |
| | | | AREA | | WATTS |

**TAILORED METHOD**

Total Allowed Watts using the Tailored Method taken from LTG-4C (Page 1 of 4) Row 3: 0

The indoor lighting power allowance using the Tailored Method of compliance shall be determined using the LTG-4C set of forms. A separate set of LTG-4C forms shall be filled out for CONDITIONED and UNCONDITIONED spaces



## LIGHTING MANDATORY MEASURES: NONRESIDENTIAL LTG-MM

Project Name: County of San Diego Cedar & Kettner Development Project — Date: 12/20/2013

### Indoor Lighting Measures:

§131(d): **Shut-off Controls**

| | |
|---|---|
| 1. | For every floor, all interior lighting systems shall be equipped with a separate automatic control to shut off the lighting. This automatic control shall meet the requirements of Section 119 and may be an occupancy sensor, automatic time switch, or other device capable of automatically shutting off the lighting. |
| 2. | Override for Building Lighting Shut-off: The automatic building shut-off system is provided with a manual, accessible override switch in sight of the lights. The area of override is not to exceed 5,000 square feet. |
| §119(h): | Automatic Control Devices Certified: All automatic control devices specified are certified, all alternate equipment shall be certified and installed as directed by the manufacturer. |
| §111: | Fluorescent Ballast and Luminaires Certified: All fluorescent fixtures specified for the project are certified and listed in the Directory. All installed fixtures shall be certified. |
| §131(a): | Individual Room/Area Controls: Each room and area in this building is equipped with a separate switch or occupancy sensor device for each area with floor-to-ceiling walls. |
| §131(b): | Uniform Reduction for Individual Rooms: All rooms and areas greater than 100 square feet and more than 0.8 watts per square foot of lighting load shall be controlled with bi-level switching for uniform reduction of lighting within the room. |
| §131(c): | Daylight Area Control: All rooms with windows and skylights that are greater than 250 square feet and that allow for the effective use of daylight in the area shall have 50% of the lamps in each daylit area controlled by a separate switch; or the effective use of daylight cannot be accomplished because the windows are continuously shaded by a building on the adjacent lot. Diagram of shading during different times of the year is included on plans. |
| §131(c): | Display Lighting. Display lighting shall be separately switched on circuits that are 20 amps or less.6. |

### Outdoor Lighting Measures:

| | |
|---|---|
| §130(c)1: | Mandatory lighting power determination for medium base sockets without permanently installed ballasts |
| §132(a): | All permanently installed luminaires with lamps rated over 100 Watts either have a lamp efficacy of at least 60 lumens per Watt or are controlled by a motion sensor. |
| §132(b): | All Luminaires with lamps rated greater than 175 Watts in hardscape area, including parking lots, building entrances, canopies, and all outdoor sales areas meet the Cutoff Requirements. |
| §132(c)1: | All permanently installed outdoor lighting meets the control requirements listed. |
| §132(c): | Building facades, parking lots, garages, canopies, and outdoor sales areas meet the Multi-Level Lighting Requirements listed. |



**County of San Diego Cedar & Kettner Development Project**
San Diego, California

McCARTHY
20401 S.W. BIRCH STREET SUITE 300
Newport Beach, California 92660

Architect
IPD
Alameda
Irvine
Los Angeles
Architecture / Engineering / Consulting
www.ipd-global.com
2 Faraday, Suite 101, Irvine CA 92618
Phone 949 595 8004 Fax 949 595 8011

SPARLING
WORK TOGETHER | STAND APART™
9191 Towne Centre Drive, Suite 220
San Diego, California 92122
858-622-2700 800-667-0610
www.sparling.com

REGISTERED PROFESSIONAL ENGINEER
PAUL K. ERICSON
No. 11219
exp.06/30/2015
ELECTRICAL
STATE OF CALIFORNIA

| Revision | Date |
|---|---|
| 100% DESIGN DEVELOPMENT | 10/23/2013 |
| 90% CDs - 1ST PLAN CHECK | 12/24/2013 |
| 2ND PLAN CHECK | 04/23/14 |

| | |
|---|---|
| Date | |
| IPD Job No. | 13-813 |
| Drawn By | SPARLING |
| Checked By | LGR/PKE |
| Scale | AS NOTED |

CONSTRUCTION DOCUMENTS

Drawing Title
TITLE 24

Drawing No.
**E0.3**

## CERTIFICATE OF COMPLIANCE (Part 1 of 4) OLTG-1C

| Project Name | Date |
|---|---|
| County of San Diego Cedar & Kettner Development Project | 12/20/2013 |
| **Project Address** | **Total Illuminated Area** |
| Cedar & Kettner San Diego, CA | 11,110 |

**GENERAL INFORMATION**

Phase of Construction: ☑ New Construction ☐ Addition ☐ Alteration

### Documentation Author's Declaration Statement

I certify that this Certificate of Compliance documentation is accurate and complete.

| | |
|---|---|
| Name: Laura Ramirez | Signature |
| Company: Sparling | Date: 12/20/2013 |
| Address: 9191 Towne Centre Dr, Suite 220 | CEA # <br> CEPE # |
| City/State/Zip: San Diego, CA 92122 | Phone: 858-622-2700 |

### Principal Lighting Designer's Declaration Statement

- I am eligible under Division 3 of the California Business and Professional Code to accept responsibility for the lighting design.
- This Certificate of Compliance identifies the lighting features and performance specifications required for compliance with Title 24, Pages 1 and 6 of the California Code of Regulations.
- The design features represented on this Certificate of Compliance are consistent with the information provided to document this design on the other applicable compliance forms, worksheets, calculations, plans and specifications submitted to the enforcement agency for approval with this building permit application.

| | |
|---|---|
| Name: Paul Ericson | Signature |
| Company: Sparling, Inc | Phone: 858-622-2700 |
| Address: 9191 Towne Centre Drive Suite 220 | License #: 11219 |
| City/State/Zip: San Diego, CA 92122 | Date: 11/15/2013 |

### Principal Lighting Designer's Declaration

☑ I certify that this Certificate of Compliance documentation is accurate and complete, and accounts for all outdoor lighting power, including building mounted, pole mounted, as well as all other lighting designed for the site, and that Additional Lighting Power Allowances for Specific Applications or Additional Lighting Power Allowances for Ordinance Requirements have not been counted more than one time for the same area, in accordance with Section 147 of the Standards.

**Outdoor Lighting Mandatory Measures**
**Indicate location on building plans of Mandatory Measures Note Block: ______________________________**

**LIGHTING COMPLIANCE FORMS & WORKSHEETS (check box if worksheets is included)**

For detailed instructions on the use of this and all Energy Efficiency Standards compliance forms; please refer to the Nonresidential Manual published by the California Energy Commission.

| | | |
|---|---|---|
| ☑ | OLTG-1C | Certificate of Compliance. All 4 pages required on plans for all submittals. |
| ☑ | OLTG-2C | (Pages 1 of 3) Lighting Wattage Allowances for General Hardscape, Sales Frontage, or Ornamental Lighting. Optional on plans. |
| ☑ | OLTG-2C | (Pages 2 of 3) Lighting Wattage Allowance for Per Application or Per Area. Optional on plans. |
| ☐ | OLTG-2C | (Pages 3 of 3) Additional Lighting Power Allowance for Ordinance Requirements. Optional on plans. |



## CERTIFICATE OF COMPLIANCE (Part 2 of 4) OLTG-1C

Project Name: County of San Diego Cedar & Kettner Development Project — Date: 12/20/2013

**COMPLIANCE FIXTURE / LIGHTING CONTROL SCHEDULE and FIELD INSPECTION CHECKLIST**

**INSTALLATION CERTIFICATE, OLTG-1INST** (Retain a copy and verify form is completed and signed.) **Field Inspection** ☐

**CERTIFICATE OF ACCEPTANCE, OLTG-2A** (Retain a copy and verify form is completed and signed.) **Field Inspection** ☐

| A Name or Item Tag | B Luminaire Description[1] See footnote below (i.e.: 1 lamp pole-top shoe-box 400 watt metal halide) | C Cutoff Designation | D Watts per Luminaire | E Special Features | F Default from NA-8 | F According to §130 (D or E) | G Number of Luminaires | H Installed Watts (D X G) | I Field Inspector[2] Pass | I Fail |
|---|---|---|---|---|---|---|---|---|---|---|
| L03 | L03 58W LED POLE | | 66.0 | ☐ | ☑ | ☐ | 5 | 330 | ☐ | ☐ |
| L01 | L01 11W LED Steplight | | 11.0 | ☐ | ☑ | ☐ | 5 | 55 | ☐ | ☐ |
| F03 | F03 - (2) 32w Compact Fluorescent Triple - WallPack | | 68.0 | ☐ | ☑ | ☐ | 5 | 340 | ☐ | ☐ |
| F04 | F04 - (2) 4 ft Fluorescent T8 - Lensed | | 58.0 | ☐ | ☑ | ☐ | 5 | 290 | ☐ | ☐ |
| | | | | ☐ | ☐ | ☐ | | | ☐ | ☐ |
| | | | | ☐ | ☐ | ☐ | | | ☐ | ☐ |
| | | | | ☐ | ☐ | ☐ | | | ☐ | ☐ |
| | | | | ☐ | ☐ | ☐ | | | ☐ | ☐ |
| | | | | ☐ | ☐ | ☐ | | | ☐ | ☐ |
| Enter total into OLTG-1C; Page 4 of 4: Row H; Total Installed Watts: | | | | | | | | 1,015 | | |

1. Type of luminaire (i.e.: post top, wall pack, surface, shoe box); for non-incandescent luminaires, indicate nominal lamp wattage and lamp type ( i.e.: fluorescent, incandescent, HID); ballast type (i.e.: electronic or magnetic); number of lamps and number of ballasts per luminaire. For incandescent luminaires, the luminaire wattage listed in column D shall be the maximum relamping rated wattage on a permanent factory-installed label on the luminaire, NOT the wattage of the lamp (bulb) used, in accordance with Section 130(d or e).
2. If Fail then describe on Page 2 of the Inspection Checklist Form and take appropriate action to correct. Verify building plans if necessary.

**EXEMPT LUMINAIRES** — Field Inspection ☐

| Name or Symbol | Description of exempt luminaires in accordance with §147 |
|---|---|
| | |
| | |
| | |
| | |

**MANDATORY CONTROLS** — Field Inspection ☐

| # | Description | Location | # | Description | Location |
|---|---|---|---|---|---|
| | | | | | |
| | | | | | |
| | | | | | |
| | | | | | |

**SPECIAL FEATURES INSPECTION CHECKLIST (See Page 2 of 4 of OLTG-1C)**

The local enforcement agency should pay special attention to the items specified in this checklist. These items require special written justification and documentation, and special verification. The local enforcement agency determines the adequacy of the justification, and may reject a building or design that otherwise complies based on the adequacy of the special justification and documentation submitted.

**Filed Inspector Notes or Discrepancies:**



## CERTIFICATE OF COMPLIANCE (Part 3 of 4) OLTG-1C

Project Name: County of San Diego Cedar & Kettner Development Project — Date: 12/20/2013

**A. OUTDOOR LIGHTING ZONE**

OUTDOOR LIGHTING ZONE: ☐ OLZ 1 ☐ OLZ 2 ☑ OLZ 3 ☐ OLZ 4

Is the Outdoor Lighting Zone: ☑ Default in accordance with §10-114, or ☐ Amended by JHA

Complete the information below if the default Outdoor Lighting Zone has been amended by the local jurisdiction having authority (JHA):

- ☐ The site is a government designated park, recreational area, wildlife preserve, or portion thereof, and has been designated as LZ2 or LZ3, in accordance with Table 10-114-A, because the site is contained within such a zone.
- ☐ The local jurisdiction having authority has officially adopted a change to the State Default Lighting Zone and has notified the Energy Commission by providing the materials required in §10-114(d) to the Executive Director.
- ☐ The adopted change is posted on the Energy Commission website.

**B. ADDITIONAL LIGHTING POWER ALLOWANCE FOR ORDINANCE REQUIREMENTS**

Are additional lighting power allowances for ordinance in Table 147-C used? ☐ Yes ☑ No

Complete the information below if additional lighting power allowances for ordinance requirements are used:

- ☐ The local jurisdiction having authority has officially adopted specific outdoor light levels, which are expressed as average or minimum footcandle levels, by following a public process that allowed for formal public notification, review, and comment about the proposed change.
- ☐ The local jurisdiction having authority which adopted specific outdoor light levels and has notified the Commission by providing the following materials required §10-114(f) to the Executive Director.

**C. ACCEPTANCE FORMS**

**Required Acceptance Tests**

### Designer:

This form is to be used by the designer and attached to the plans. Listed below is the acceptance test for the Lighting system, **OLTG-2A**. The designer is required to check the acceptance tests and list all control devices serving the building or space shall be certified as meeting the Acceptance Requirements for Code Compliance. If all the lighting system or control of a certain type requires a test, list the different lighting and the number of systems. The NA7 Section in the Appendix of the Nonresidential Reference Appendices Manual describes the test. Since this form will be part of the plans, completion of this section will allow the responsible party to budget for the scope of work appropriately. **Forms can be grouped by type of Luminaire controlled.**

### Enforcement Agency:

**Systems Acceptance**. Before Occupancy Permit is granted for a newly constructed building or space or when ever new lighting system with controls is installed in the building or space shall be certified as meeting the Acceptance Requirements.
The **OLTG-2A** form is not considered a complete form and is not to be accepted by the enforcement agency unless the boxes are checked and/or filled and signed. In addition, a Certificate of Acceptance forms shall be submitted to the enforcement agency that certifies plans, specifications, installation certificates, and operating and maintenance information meet the requirements of §10-103(b) of Title 24 Part 6. The field inspector must receive the properly filled out and signed forms before the building can receive final occupancy. A copy of the **OLTG-2A** for each different lighting luminaire control(s) must be provided to the owner of the building for their records.

| Equipment Requiring Testing | Luminaires Controlled: Description | Qty. of Like Controls | Location | Certificate of Acceptance OLTG-2A[1] Outdoor Lighting Acceptance Tests |
|---|---|---|---|---|
| | | | | |
| | | | | |
| | | | | |
| | | | | |
| | | | | |
| | | | | |

1. Insert: **OMS** for Outdoor Motion Sensor; **OLSC** for Outdoor Lighting Shutoff Controls; **OP** for Outdoor Photocontrol; **ATS** for Astronomical Time Switch; and, **STS** for Standard (non-astronomical) Time Switch acceptance.



## CERTIFICATE OF COMPLIANCE (Part 4 of 4) OLTG-1C

Project Name: County of San Diego Cedar & Kettner Development Project — Date: 12/20/2013

**ALLOWED AND INSTALLED OUTDOOR LIGHTING POWER**

| | | Lighting Wattage Power Allowance |
|---|---|---|
| A | Lighting power allowance for general hardscape (from OLTG-2C Page 1 of 3) | 1,792 |
| B | Specific application lighting wattage allowance per unit length (from OLTG-2C Page 1 of 3) | 0 |
| C | Specific application lighting wattage allowance for ornamental lighting (from OLTG-2C Page 1 of 3) | 0 |
| D | Specific application lighting wattage allowance per application (from OLTG-2C Page 2 of 3) | 100 |
| E | Specific application lighting wattage allowance per area (from OLTG-2C Page 2 of 3) | 0 |
| F | Specific application lighting wattage allowance for ordinance requirements (from OLTG-2C Page 3 of 3) | 0 |
| G | Total Allowed Wattage = Sum of rows A through F: | 1,892 |
| H | Total installed watts (from Compliance Fixture Schedule, (from OLTG-2C Page 1 of 3) | 1,015 |

**Complies if wattage in row H is less than or equal to the wattages in row G** ☑ Yes ☐ No



## OUTDOOR LIGHTING WORKSHEET (Part 1 of 3) OLTG-2C

Project Name: County of San Diego Cedar & Kettner Development Project — Date: 12/20/2013

**A. LIGHTING POWER ALLOWANCE FOR GENERAL HARDSCAPE**

| AREA WATTAGE ALLOWANCE (AWA) A Illuminated Hardscape Area | B AWA Per Square Foot | C AWA (A X B) | LINEAR WATTAGE ALLOWANCE (LWA) D Perimeter Length of General Hardscape | E LWA Per Linear Foot | F LWA (D X E) | INITIAL WATTAGE ALLOWANCE G IWA (Watts) | TOTAL GENERAL HARDSCAPE LIGHTING ALLOWANCE H C + F + G |
|---|---|---|---|---|---|---|---|
| 11,110 | 0.092 | 1,022 | 0 | 0.920 | 0 | 770 | 1,792 |
| | | | | | | | |
| | | | | | | | |
| | | | | | | | |
| Enter total into OLTG-1C; Page 4 of 4; Row A; Lighting Power Allowance for General Hardscape | | | | | | | 1,792 |

☑ Yes AWA, LWA, and IWA from Table 147-A was used as appropriate for the Outdoor Lighting Zone

**B. SPECIFIC APPLICATION LIGHTING WATTAGE ALLOWANCE PER UNIT LENGTH (Available only for sales frontage)**

| DETERMINE WATTAGE ALLOWANCE: A Specific Lighting Application | B Linear Foot of Frontage | C Sales Frontage Allowance for OLZ (Watts per LF) | D Wattage Allowance (B X C) | LUMINAIRE TYPE: E Name or Symbol | F Luminaire Type | DESIGN WATTS: G Lumin QTY | H Watts Per Luminaire | I Design Watts (G X H) | J Allowed Watts Minimum of D or I |
|---|---|---|---|---|---|---|---|---|---|
| | | | | | | | | | |
| | | | | | | | | | |
| | | | | | | | | | |
| | | | | | | | | | |
| Enter total into OLTG-1C; Page 4 of 4; Row B; Specific Application Lighting Wattage Allowance Per Unit Length | | | | | | | | | 0 |

**C. SPECIFIC APPLICATION WATTAGE ALLOWANCE FOR ORNAMENTAL LIGHTING**

| DETERMINE WATTAGE ALLOWANCE: A Specific Lighting Application | B Square feet of Harscape | C Ornamental Lighting Allowance for OLZ (Watts per $ft^2$) | D Wattage Allowance (B X C) | LUMINAIRE TYPE: E Name or Symbol | F Luminaire Type | DESIGN WATTS: G Lumin QTY | H Watts Per Luminaire | I Design Watts (G X H) | J Allowed Watts Minimum of D or I |
|---|---|---|---|---|---|---|---|---|---|
| | | | | | | | | | |
| | | | | | | | | | |
| | | | | | | | | | |
| | | | | | | | | | |
| Enter total into OLTG-1C; Page 4 of 4; Row C; Specific Application Wattage for Ornamental Lighting | | | | | | | | | 0 |



**County of San Diego Cedar & Kettner Development Project**
San Diego, California


20401 S.W. BIRCH STREET SUITE 300
Newport Beach, California 92660

Architect
Alameda
Irvine
Los Angeles
IPD
Architecture / Engineering / Consulting
www.ipd-global.com
2 Faraday, Suite 101, Irvine CA 92618
Phone 949 595 8004 Fax 949 595 8011

SPARLING
WORK TOGETHER | STAND APART™
9191 Towne Centre Drive, Suite 220
San Diego, California 92122
858-622-2700 800-667-0610
www.sparling.com


| Revision | Date |
|---|---|
| 100% DESIGN DEVELOPMENT | 10/23/2013 |
| 90% CDs - 1ST PLAN CHECK | 12/24/2013 |
| 2ND PLAN CHECK | 04/23/14 |

| | |
|---|---|
| Date | |
| IPD Job No. | 13-813 |
| Drawn By | SPARLING |
| Checked By | LGR/PKE |
| Scale | AS NOTED |

CONSTRUCTION DOCUMENTS

Drawing Title
TITLE 24

Drawing No.
**E0.4**

T:\B18139\CAD-BIM\E04 Apr 22, 2014 8:45 AM By:EALVAREZ
IPD, Inc.

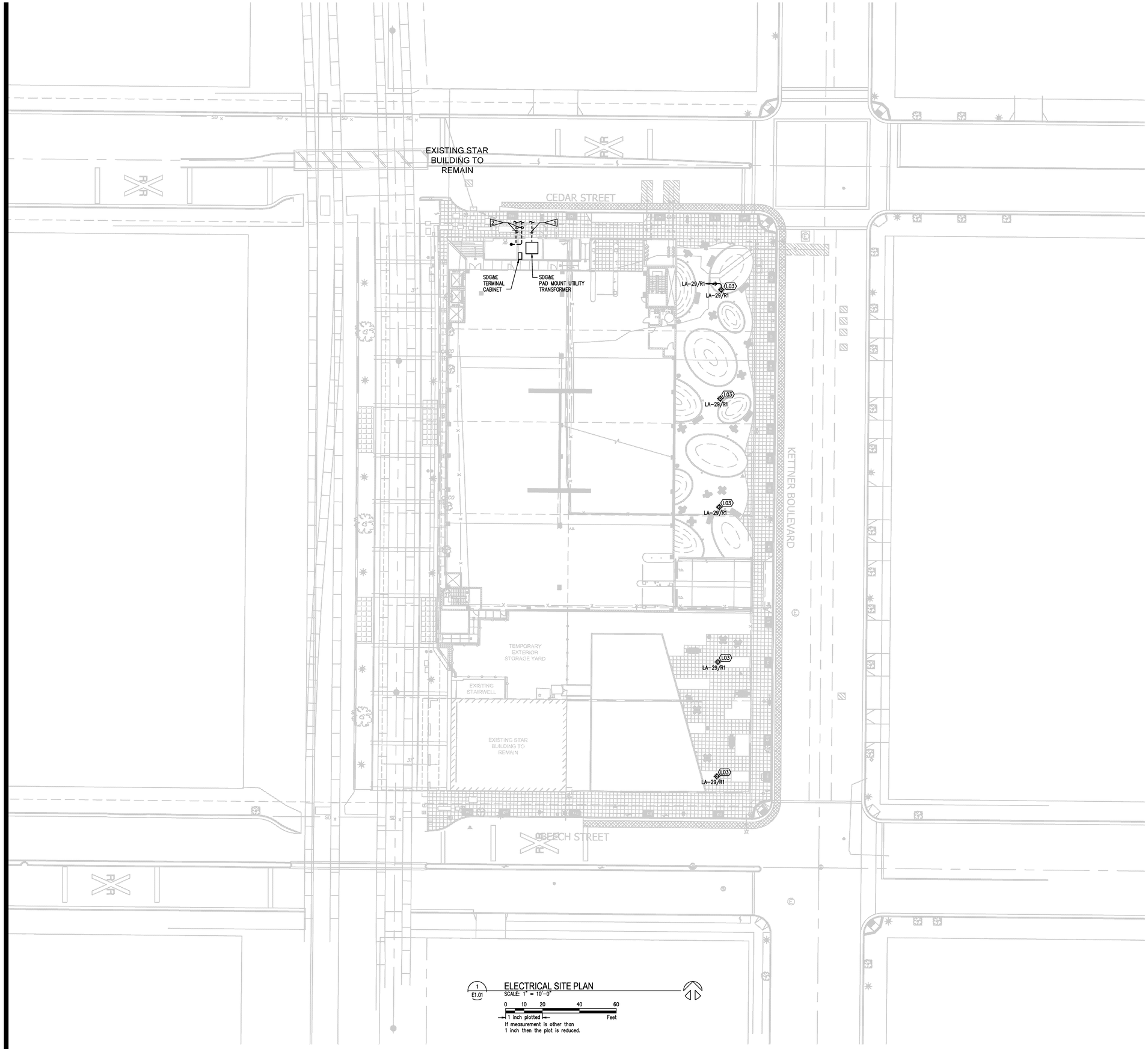


1 E1.01 ELECTRICAL SITE PLAN
SCALE: 1" = 10'-0"

0 10 20 40 60
1 inch plotted Feet
If measurement is other than 1 inch then the plot is reduced.

## GENERAL NOTES:

1. SITE LIGHTING TO BE TIED TO THE PHOTOCELL LOCATED ON THE ROOF LEVEL. REFER TO SHEET E2.05 FOR LOCATION.
2. FOR CORRECT WIRE SIZES ON BRANCH CIRCUITS ABOVE 100 FT. LONG, REFER TO VOLTAGE DROP SCHEDULE ON E5.1 (FINAL WIRE COLUMN), CONTRACTOR TO VERIFY DISTANCES IN FIELD BEFORE ROUGH-IN.
3. FOR ALL MULTI CIRCUIT HOMERUNS WITH SHARED NEUTRAL, PROVIDE BREAKER HANDLE TIES AT THE PANEL PER NEC 210.4(B).
4. REFER TO SHEET E3.01 FOR LOCATION OF ALL PANELS IN THE MAIN ELECTRICAL ROOM (B2 LEVEL).
5. REFER TO SHEET E0.2 FOR LIGHTING FIXTURE SCHEDULE.
6. REFER TO SHEET E0.2 FOR LCP SCHEDULE AND LOW VOLTAGE CONTROL DESIGNATIONS.

## FLAG NOTES:

1. 1-4" C. FROM UTILITY TRANSFORMER TO LOCAL UTILITY POINT OF CONNECTION.
2. 2-4" C. FROM TELECOMM. UTILITY POINT OF CONNECTION.

**County of San Diego**
**Cedar & Kettner**
**Development Project**
San Diego, California

McCARTHY
20401 S.W. BIRCH STREET SUITE 300
Newport Beach, California 92660

Architect
IPD
Alameda
Irvine
Los Angeles
Architecture / Engineering / Consulting
www.ipd-global.com
2 Faraday, Suite 101, Irvine CA 92618
Phone 949 595 8004 Fax 949 595 8011

SPARLING
WORK TOGETHER | STAND APART™
9191 Towne Centre Drive, Suite 220
San Diego, California 92122
858-622-2700 800-667-0610
www.sparling.com

REGISTERED PROFESSIONAL ENGINEER
PAUL K. ERICKSON
No. 11219
exp. 06/30/2015
CIVIL
STATE OF CALIFORNIA

| Revision | Date |
|---|---|
| 100% DESIGN DEVELOPMENT | 10/23/2013 |
| 90% CDs - 1ST PLAN CHECK | 12/24/2013 |
| 2ND PLAN CHECK | 04/23/14 |

| | |
|---|---|
| Date | |
| IPD Job No. | 13-813 |
| Drawn By | SPARLING |
| Checked By | LGR/PKE |
| Scale | AS NOTED |

CONSTRUCTION DOCUMENTS

Drawing Title
ELECTRICAL SITE PLAN

Drawing No.
E1.01

T:\B18139\CAD-BIM\E101 Apr 22, 2014 10:45 AM By:EALVAREZ
IPD, Inc.

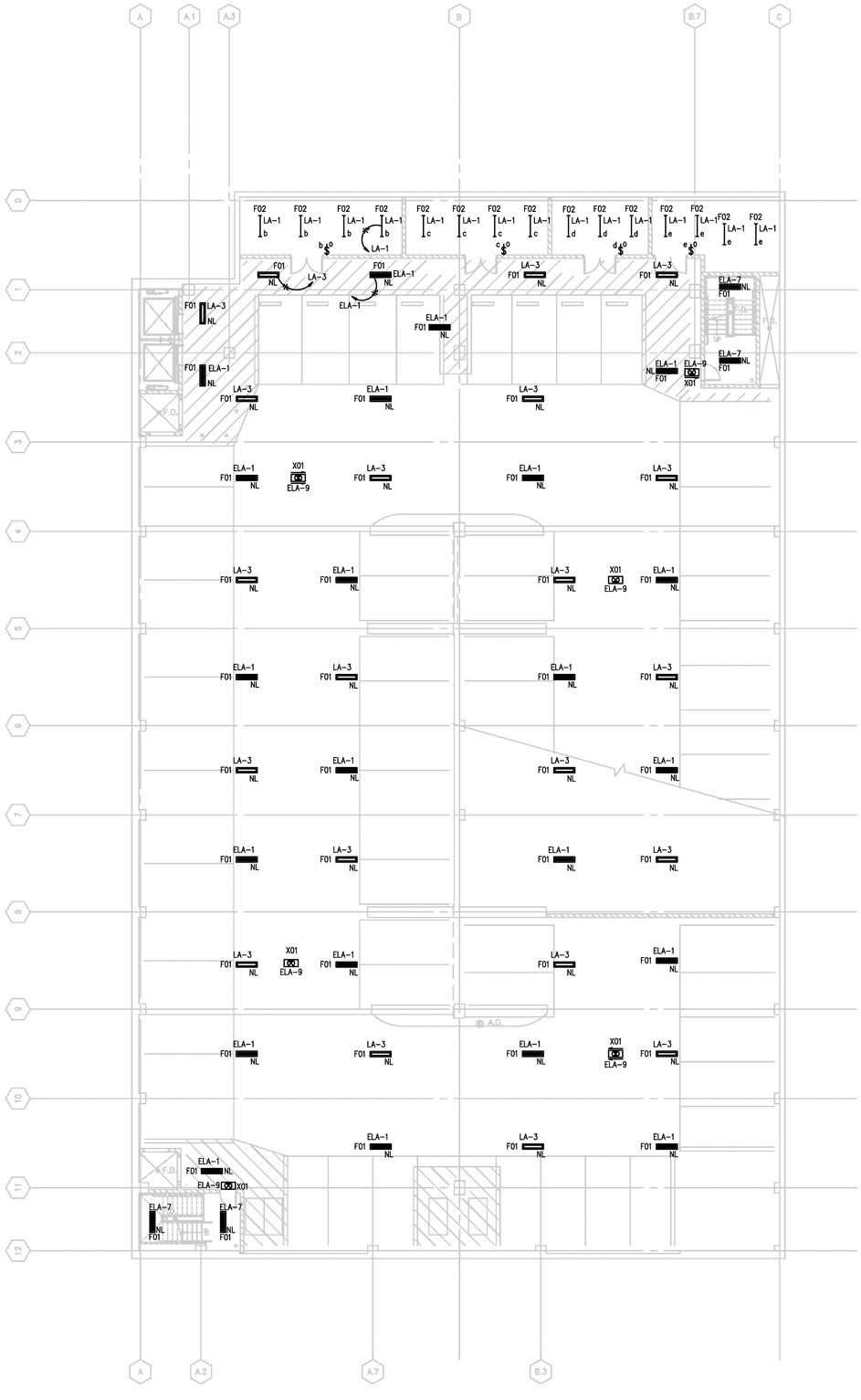

2 E2.01 B3 LEVEL LIGHTING PLAN
SCALE: AS INDICATED
0 4 8 16 24 32
1 inch plotted — Feet
If measurement is other than 1 inch then the plot is reduced.

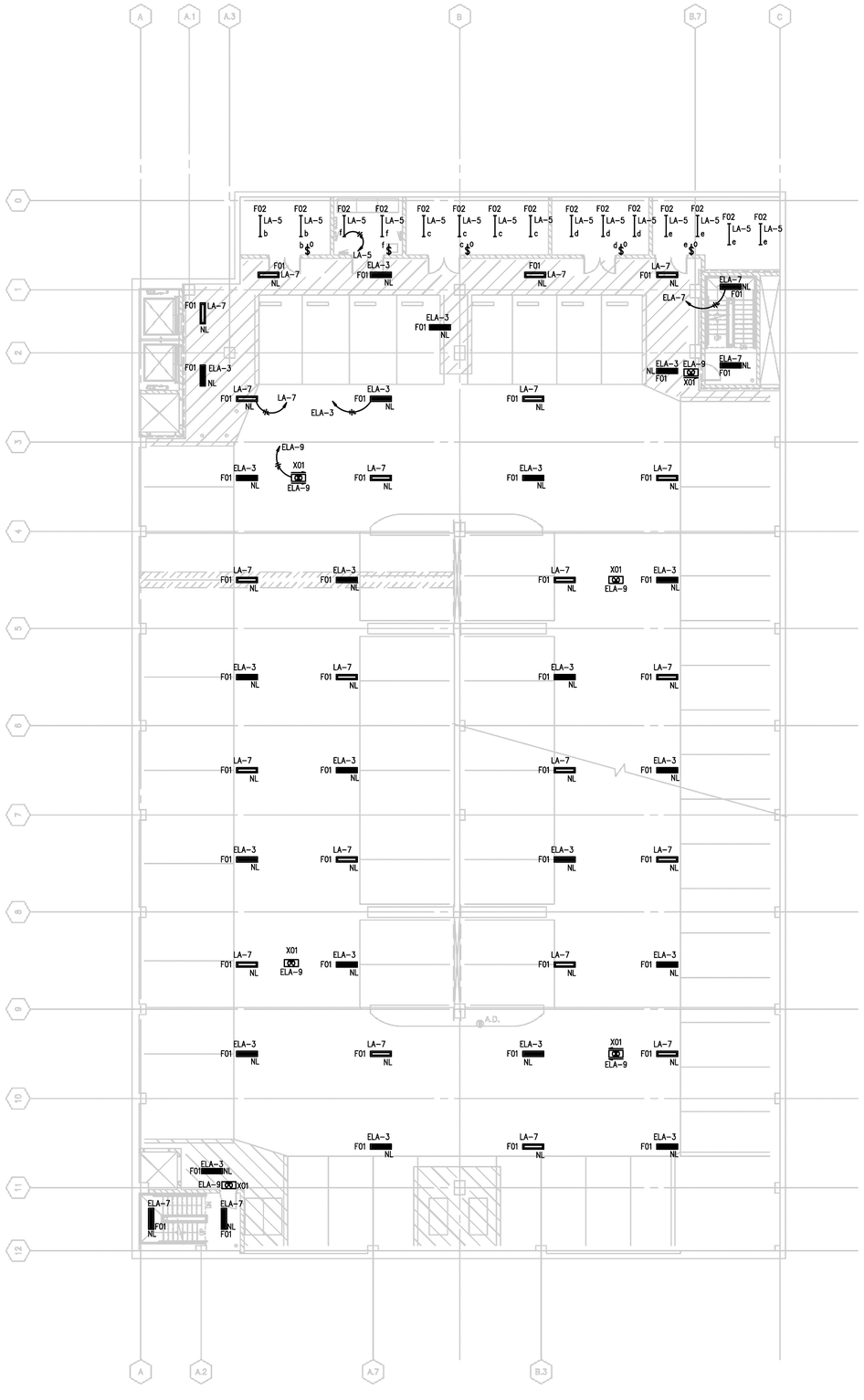

1 E2.01 B2 LEVEL LIGHTING PLAN
SCALE: AS INDICATED
0 4 8 16 24 32
1 inch plotted — Feet
If measurement is other than 1 inch then the plot is reduced.

## GENERAL NOTES:

1. FOR CORRECT WIRE SIZES ON BRANCH CIRCUITS ABOVE 100 FT. LONG, REFER TO VOLTAGE DROP SCHEDULE ON E5.01 (FINAL WIRE COLUMN), CONTRACTOR TO VERIFY DISTANCES IN FIELD BEFORE ROUGH-IN.
2. FOR ALL MULTI CIRCUIT HOMERUNS WITH SHARED NEUTRAL, PROVIDE BREAKER HANDLE TIES AT THE PANEL PER NEC 210.4(B).
3. REFER TO SHEET E3.01 FOR LOCATION OF ALL PANELS IN THE MAIN ELECTRICAL ROOM (B2 LEVEL).
4. REFER TO SHEET E0.2 FOR LIGHTING FIXTURE SCHEDULE.
5. REFER TO SHEET E0.2 FOR LCP SCHEDULE AND LOW VOLTAGE CONTROL DESIGNATIONS.
6. OCCUPANCY SENSORS ARE SHOWN FOR REFERENCE ONLY. CONTRACTOR TO PROVIDE SHOP DRAWINGS FOR APPROVAL PRIOR TO PURCHASE.
7. PHOTOCELL MANUFACTURER TO PROVIDE SHOP DRAWINGS TO CONFIRM RECOMMENDED LOCATIONS PRIOR TO ROUGH-IN.
8. PROVIDE UNSWITCHED HOT CONDUCTOR TO ALL EXIT SIGNS.
9. ALL SHADED LIGHT FIXTURES TO BE CONNECTED TO EMERGENCY POWER.

**County of San Diego**
**Cedar & Kettner**
**Development Project**
San Diego, California

McCARTHY
20401 S.W. BIRCH STREET SUITE 300
Newport Beach, California 92660

Architect
IPD
Alameda
Irvine
Los Angeles
Architecture / Engineering / Consulting
www.ipd-global.com
2 Faraday, Suite 101, Irvine CA 92618
Phone 949 595 8004 Fax 949 595 8011

SPARLING
WORK TOGETHER | STAND APART™
9191 Towne Centre Drive, Suite 220
San Diego, California 92122
858-622-2700 800-667-0610
www.sparling.com

REGISTERED PROFESSIONAL ENGINEER
PHIL K. ERICSON
No. 11219
exp. 06/30/2015
CIVIL
STATE OF CALIFORNIA

| Revision | Date |
|---|---|
| 100% DESIGN DEVELOPMENT | 10/23/2013 |
| 90% CDs - 1ST PLAN CHECK | 12/24/2013 |
| 2ND PLAN CHECK | 04/23/14 |

| | |
|---|---|
| Date | |
| IPD Job No. | 13-813 |
| Drawn By | SPARLING |
| Checked By | LGR/PKE |
| Scale | 3/32"=1' |

CONSTRUCTION DOCUMENTS

Drawing Title
B3 AND B2 LEVEL LIGHTING PLANS

Drawing No.
E2.01

T:\B18139\CAD-BIM\E201 Apr 22, 2014 10:07 AM By:EALVAREZ
IPD, Inc.

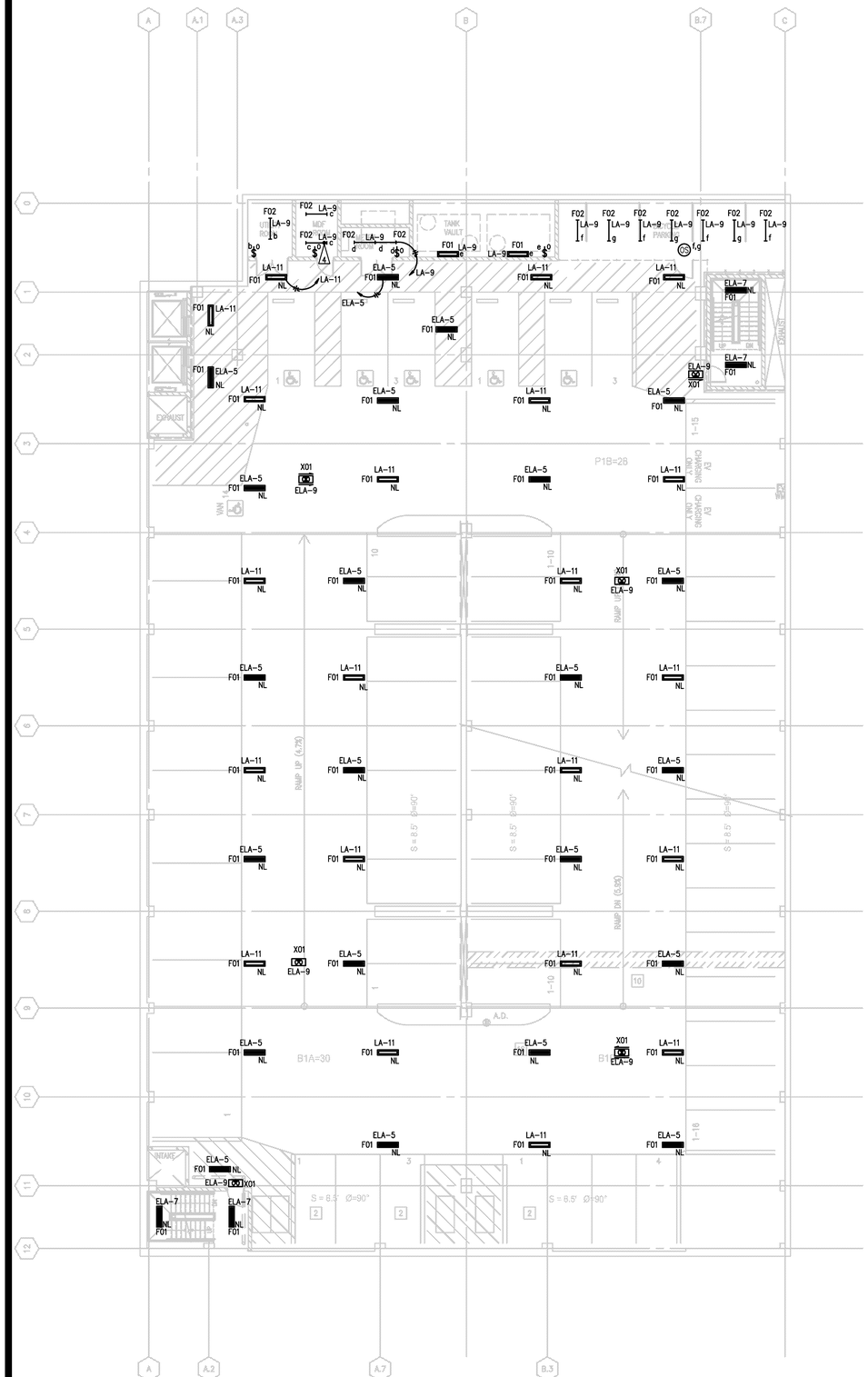

2 E2.02 B1 LEVEL LIGHTING PLAN
SCALE: AS INDICATED
0 4 8 16 24 32
1 inch plotted — Feet
If measurement is other than 1 inch then the plot is reduced.

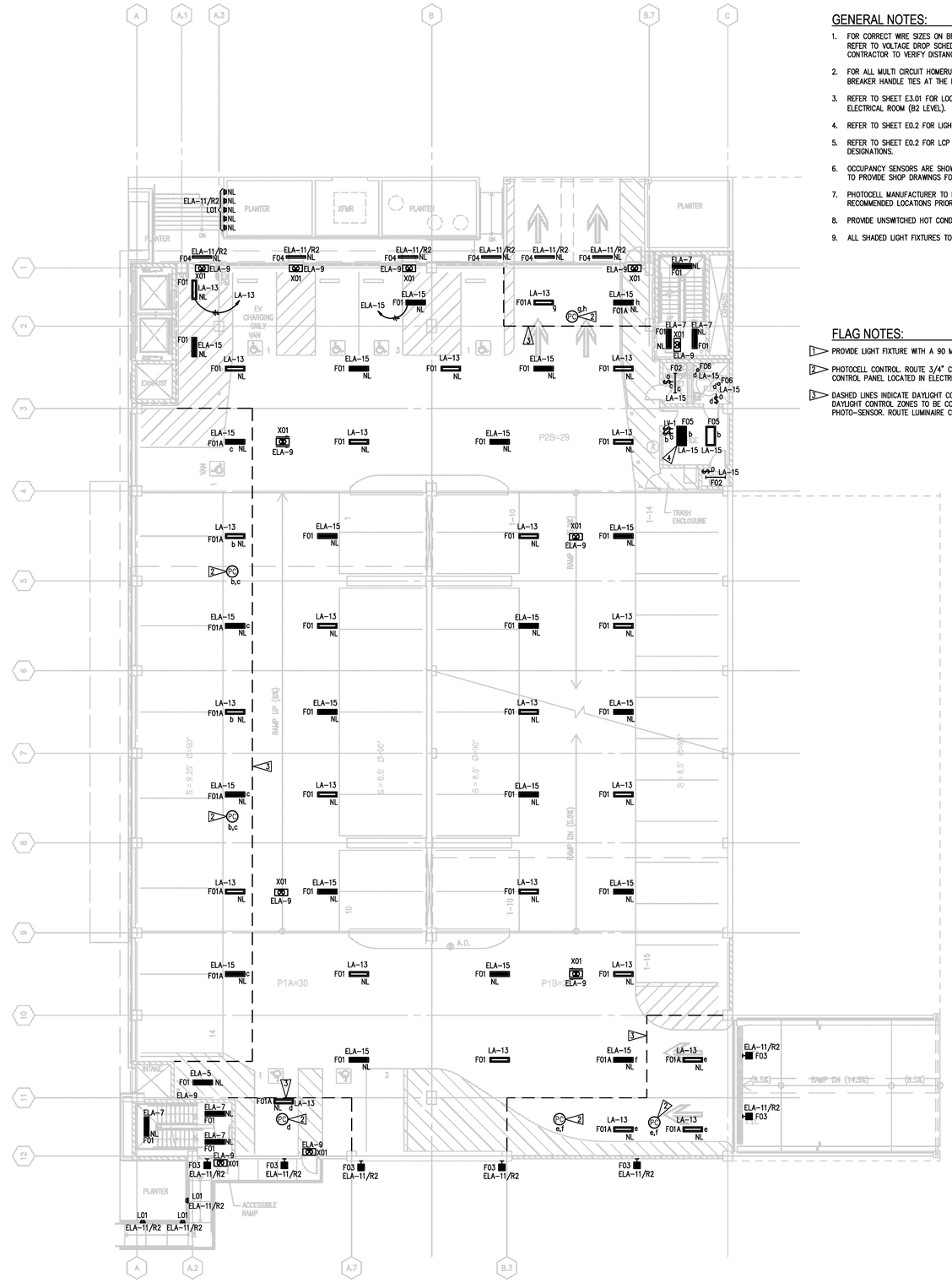

1 E2.02 P1 LEVEL LIGHTING PLAN
SCALE: AS INDICATED
0 4 8 16 24 32
1 inch plotted — Feet
If measurement is other than 1 inch then the plot is reduced.

## GENERAL NOTES:

1. FOR CORRECT WIRE SIZES ON BRANCH CIRCUITS ABOVE 100 FT. LONG, REFER TO VOLTAGE DROP SCHEDULE ON E5.01 (FINAL WIRE COLUMN), CONTRACTOR TO VERIFY DISTANCES IN FIELD BEFORE ROUGH-IN.
2. FOR ALL MULTI CIRCUIT HOMERUNS WITH SHARED NEUTRAL, PROVIDE BREAKER HANDLE TIES AT THE PANEL PER NEC 210.4(B).
3. REFER TO SHEET E3.01 FOR LOCATION OF ALL PANELS IN THE MAIN ELECTRICAL ROOM (B2 LEVEL).
4. REFER TO SHEET E0.2 FOR LIGHTING FIXTURE SCHEDULE.
5. REFER TO SHEET E0.2 FOR LCP SCHEDULE AND LOW VOLTAGE CONTROL DESIGNATIONS.
6. OCCUPANCY SENSORS ARE SHOWN FOR REFERENCE ONLY. CONTRACTOR TO PROVIDE SHOP DRAWINGS FOR APPROVAL PRIOR TO PURCHASE.
7. PHOTOCELL MANUFACTURER TO PROVIDE SHOP DRAWINGS TO CONFIRM RECOMMENDED LOCATIONS PRIOR TO ROUGH-IN.
8. PROVIDE UNSWITCHED HOT CONDUCTOR TO ALL EXIT SIGNS.
9. ALL SHADED LIGHT FIXTURES TO BE CONNECTED TO EMERGENCY POWER.

## FLAG NOTES:

1. PROVIDE LIGHT FIXTURE WITH A 90 MINUTE EMERGENCY BATTERY PACK.
2. PHOTOCELL CONTROL. ROUTE 3/4" CONDUIT WITH CAT-5 CABLE TO LIGHTING CONTROL PANEL LOCATED IN ELECTRICAL ROOM.
3. DASHED LINES INDICATE DAYLIGHT CONTROL ZONES. FIXTURES WITHIN DAYLIGHT CONTROL ZONES TO BE CONTROLLED BY IN-LINE CEILING MOUNTED PHOTO-SENSOR. ROUTE LUMINAIRE CIRCUITS THROUGH PHOTO-SENSOR.

**County of San Diego**
**Cedar & Kettner**
**Development Project**
San Diego, California

McCARTHY
20401 S.W. BIRCH STREET SUITE 300
Newport Beach, California 92660

Architect
IPD
Alameda
Irvine
Los Angeles
Architecture / Engineering / Consulting
www.ipd-global.com
2 Faraday, Suite 101, Irvine CA 92618
Phone 949 595 8004 Fax 949 595 8011

SPARLING
WORK TOGETHER | STAND APART™
9191 Towne Centre Drive, Suite 220
San Diego, California 92122
858-622-2700 800-667-0610
www.sparling.com

REGISTERED PROFESSIONAL ENGINEER
PAUL K. ERICSON
No. 11219
exp. 06/30/2015
STATE OF CALIFORNIA

| Revision | Date |
|---|---|
| 100% DESIGN DEVELOPMENT | 10/23/2013 |
| 90% CDs - 1ST PLAN CHECK | 12/24/2013 |
| 2ND PLAN CHECK | 04/23/14 |

| | |
|---|---|
| Date | |
| IPD Job No. | 13-813 |
| Drawn By | SPARLING |
| Checked By | LGR/PKE |
| Scale | 3/32"=1' |

CONSTRUCTION DOCUMENTS

Drawing Title
B1 AND P1 LEVEL LIGHTING PLANS

Drawing No.
E2.02

T:\B18139\CAD-BIM\E202 Apr 22, 2014 10:10 AM By:EALVAREZ
IPD, Inc.

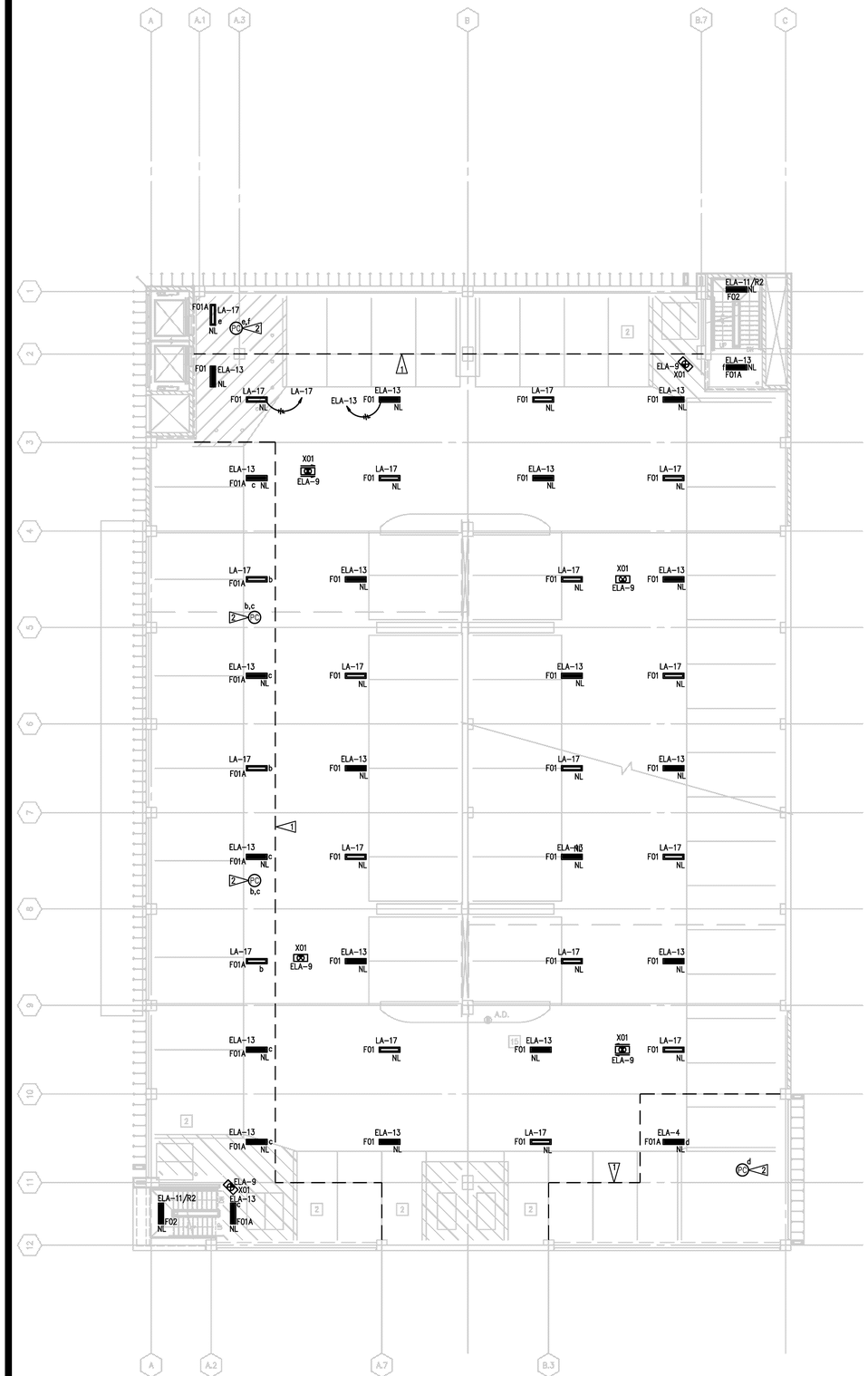

1 E2.03 P2 LEVEL LIGHTING PLAN
SCALE: AS INDICATED
0 4 8 16 24 32
1 inch plotted — Feet
If measurement is other than 1 inch then the plot is reduced.

2 E2.03 P3 LEVEL LIGHTING PLAN
SCALE: AS INDICATED
0 4 8 16 24 32
1 inch plotted — Feet
If measurement is other than 1 inch then the plot is reduced.

## GENERAL NOTES:

1. FOR CORRECT WIRE SIZES ON BRANCH CIRCUITS ABOVE 100 FT. LONG, REFER TO VOLTAGE DROP SCHEDULE ON E5.01 (FINAL WIRE COLUMN), CONTRACTOR TO VERIFY DISTANCES IN FIELD BEFORE ROUGH-IN.
2. FOR ALL MULTI CIRCUIT HOMERUNS WITH SHARED NEUTRAL, PROVIDE BREAKER HANDLE TIES AT THE PANEL PER NEC 210.4(B).
3. REFER TO SHEET E3.01 FOR LOCATION OF ALL PANELS IN THE MAIN ELECTRICAL ROOM (B2 LEVEL).
4. REFER TO SHEET E0.2 FOR LIGHTING FIXTURE SCHEDULE.
5. REFER TO SHEET E0.2 FOR LCP SCHEDULE AND LOW VOLTAGE CONTROL DESIGNATIONS.
6. OCCUPANCY SENSORS ARE SHOWN FOR REFERENCE ONLY. CONTRACTOR TO PROVIDE SHOP DRAWINGS FOR APPROVAL PRIOR TO PURCHASE.
7. PHOTOCELL MANUFACTURER TO PROVIDE SHOP DRAWINGS TO CONFIRM RECOMMENDED LOCATIONS PRIOR TO ROUGH-IN.
8. PROVIDE UNSWITCHED HOT CONDUCTOR TO ALL EXIT SIGNS.
9. ALL SHADED LIGHT FIXTURES TO BE CONNECTED TO EMERGENCY POWER.

## FLAG NOTES:

1. DASHED LINES INDICATE DAYLIGHT CONTROL ZONES. FIXTURES WITHIN DAYLIGHT CONTROL ZONES TO BE CONTROLLED BY IN-LINE CEILING MOUNTED PHOTO-SENSOR. ROUTE LUMINAIRE CIRCUITS THROUGH PHOTO-SENSOR.
2. PHOTOCELL CONTROL. ROUTE 3/4" CONDUIT WITH CAT-5 CABLE TO LIGHTING CONTROL PANEL LOCATED IN ELECTRICAL ROOM.

**County of San Diego**
**Cedar & Kettner**
**Development Project**
San Diego, California

McCARTHY
20401 S.W. BIRCH STREET SUITE 300
Newport Beach, California 92660


Architect
IPD
Alameda
Irvine
Los Angeles
Architecture / Engineering / Consulting
www.ipd-global.com
2 Faraday, Suite 101, Irvine CA 92618
Phone 949 595 8004 Fax 949 595 8011

SPARLING
WORK TOGETHER | STAND APART™
9191 Towne Centre Drive, Suite 220
San Diego, California 92122
858-622-2700 800-667-0610
www.sparling.com


REGISTERED PROFESSIONAL ENGINEER
PAUL K. ERICSON
No. 11219
exp. 06/30/2015
ELECTRICAL
STATE OF CALIFORNIA

| Revision | Date |
|---|---|
| 100% DESIGN DEVELOPMENT | 10/23/2013 |
| 90% CDs - 1ST PLAN CHECK | 12/24/2013 |
| 2ND PLAN CHECK | 04/23/14 |

| | |
|---|---|
| Date | |
| IPD Job No. | 13-813 |
| Drawn By | SPARLING |
| Checked By | LGR/PKE |
| Scale | 3/32"=1' |

CONSTRUCTION DOCUMENTS

Drawing Title
P2 AND P3 LEVEL LIGHTING PLANS

Drawing No.
E2.03

T:\B18139\CAD-BIM\E203 Apr 22, 2014 12:02 PM By:EALVAREZ
IPD, Inc.

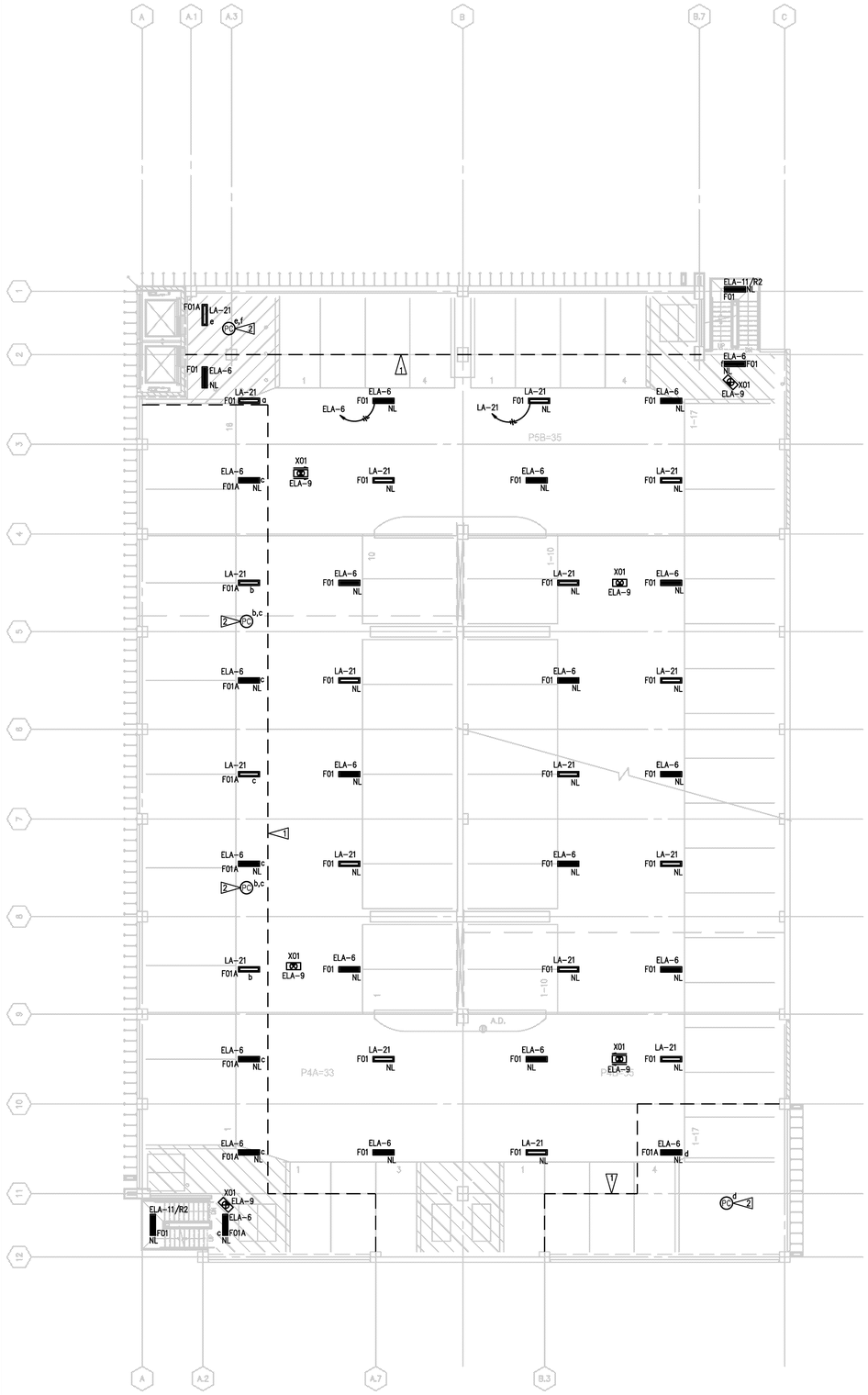

1 E2.04 P4 LEVEL LIGHTING PLAN
SCALE: AS INDICATED
0 4 8 16 24 32
1 inch plotted — Feet
If measurement is other than 1 inch then the plot is reduced.

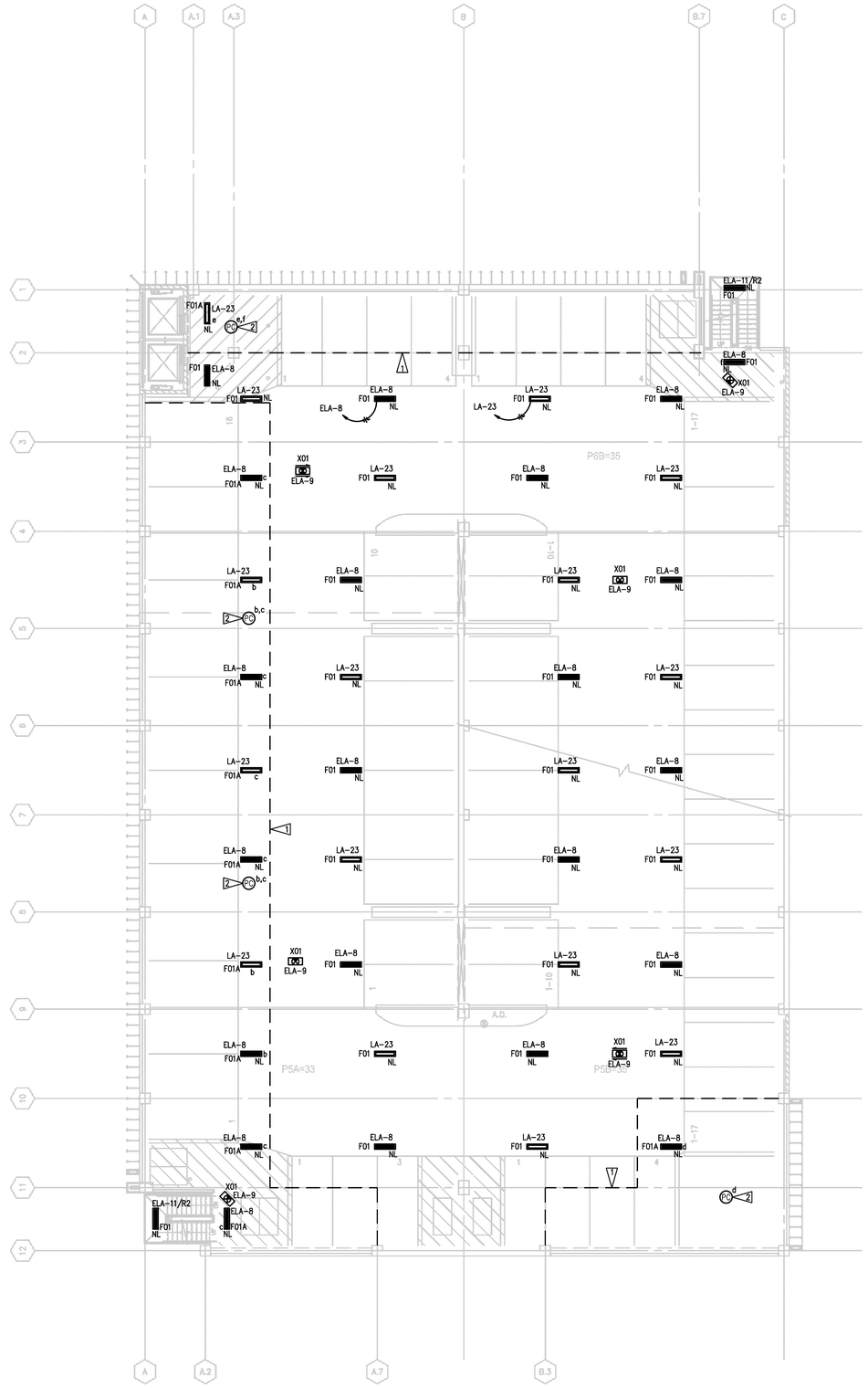

2 E2.04 P5 LEVEL LIGHTING PLAN
SCALE: AS INDICATED
0 4 8 16 24 32
1 inch plotted — Feet
If measurement is other than 1 inch then the plot is reduced.

## GENERAL NOTES:

1. FOR CORRECT WIRE SIZES ON BRANCH CIRCUITS ABOVE 100 FT. LONG, REFER TO VOLTAGE DROP SCHEDULE ON E5.01 (FINAL WIRE COLUMN), CONTRACTOR TO VERIFY DISTANCES IN FIELD BEFORE ROUGH-IN.
2. FOR ALL MULTI CIRCUIT HOMERUNS WITH SHARED NEUTRAL, PROVIDE BREAKER HANDLE TIES AT THE PANEL PER NEC 210.4(B).
3. REFER TO SHEET E3.01 FOR LOCATION OF ALL PANELS IN THE MAIN ELECTRICAL ROOM (B2 LEVEL).
4. REFER TO SHEET E0.2 FOR LIGHTING FIXTURE SCHEDULE.
5. REFER TO SHEET E0.2 FOR LCP SCHEDULE AND LOW VOLTAGE CONTROL DESIGNATIONS.
6. OCCUPANCY SENSORS ARE SHOWN FOR REFERENCE ONLY. CONTRACTOR TO PROVIDE SHOP DRAWINGS FOR APPROVAL PRIOR TO PURCHASE.
7. PHOTOCELL MANUFACTURER TO PROVIDE SHOP DRAWINGS TO CONFIRM RECOMMENDED LOCATIONS PRIOR TO ROUGH-IN.
8. PROVIDE UNSWITCHED HOT CONDUCTOR TO ALL EXIT SIGNS.
9. ALL SHADED LIGHT FIXTURES TO BE CONNECTED TO EMERGENCY POWER.

## FLAG NOTES:

1. DASHED LINES INDICATE DAYLIGHT CONTROL ZONES. FIXTURES WITHIN DAYLIGHT CONTROL ZONES TO BE CONTROLLED BY IN-LINE CEILING MOUNTED PHOTO-SENSOR. ROUTE LUMINAIRE CIRCUITS THROUGH PHOTO-SENSOR.
2. PHOTOCELL CONTROL. ROUTE 3/4" CONDUIT WITH CAT-5 CABLE TO LIGHTING CONTROL PANEL LOCATED IN ELECTRICAL ROOM.

**County of San Diego**
**Cedar & Kettner**
**Development Project**
San Diego, California

McCARTHY
20401 S.W. BIRCH STREET SUITE 300
Newport Beach, California 92660


Architect
IPD
Alameda
Irvine
Los Angeles
Architecture / Engineering / Consulting
www.ipd-global.com
2 Faraday, Suite 101, Irvine CA 92618
Phone 949 595 8004 Fax 949 595 8011

SPARLING
WORK TOGETHER | STAND APART™
9191 Towne Centre Drive, Suite 220
San Diego, California 92122
858-622-2700 800-667-0610
www.sparling.com


REGISTERED PROFESSIONAL ENGINEER
PAUL K. ERICSON
No. 11219
exp. 06/30/2015
ELECTRICAL
STATE OF CALIFORNIA

| Revision | Date |
|---|---|
| 100% DESIGN DEVELOPMENT | 10/23/2013 |
| 90% CDs - 1ST PLAN CHECK | 12/24/2013 |
| 2ND PLAN CHECK | 04/23/14 |

| | |
|---|---|
| Date | |
| IPD Job No. | 13-813 |
| Drawn By | SPARLING |
| Checked By | LGR/PKE |
| Scale | 3/32"=1' |

CONSTRUCTION DOCUMENTS

Drawing Title
P4 AND P5 LEVEL LIGHTING PLANS

Drawing No.
E2.04


T:\B18139\CAD-BIM\E204 Apr 22, 2014 12:03 PM By:EALVAREZ
IPD, Inc.

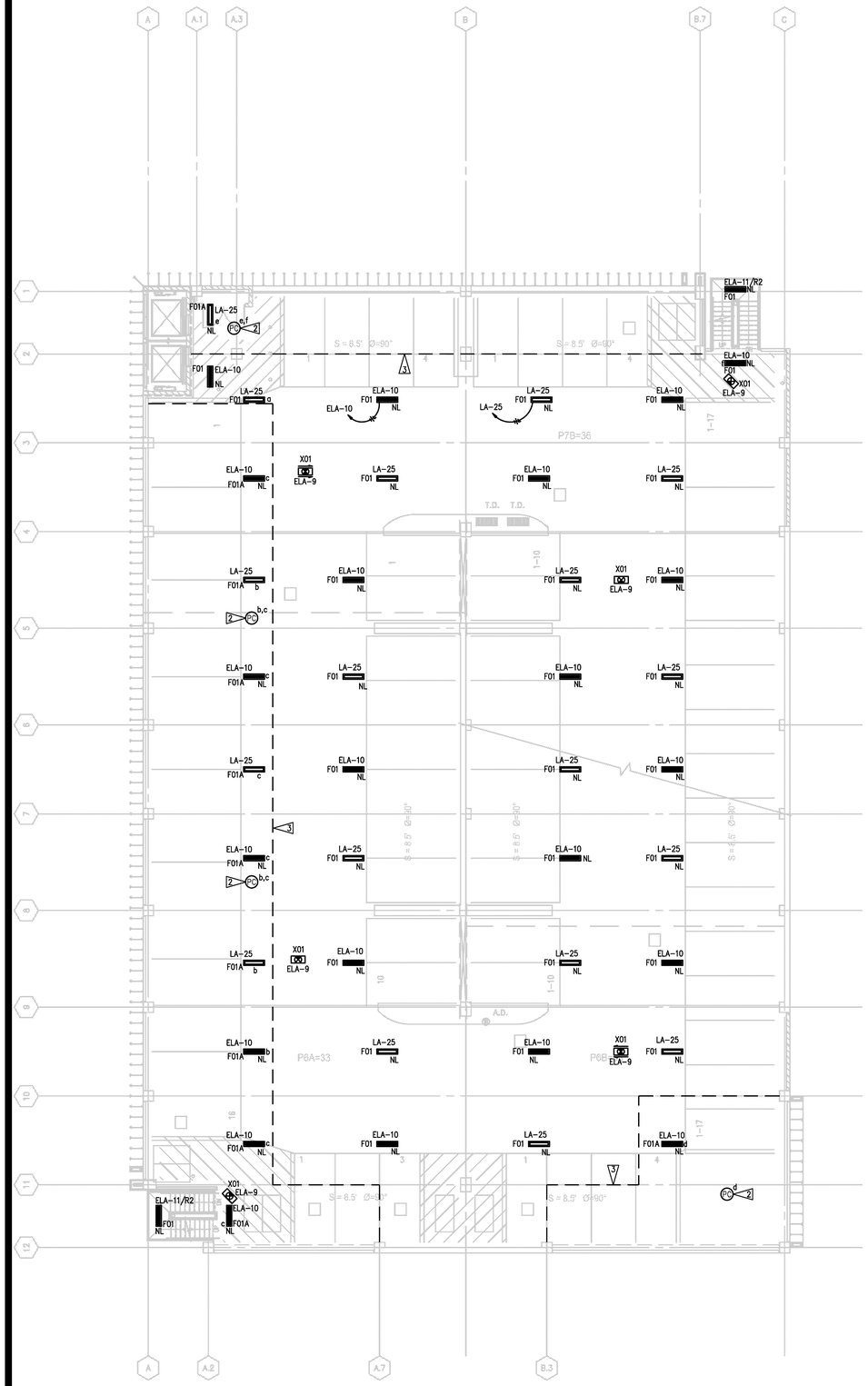


1 E2.05 P6 LEVEL LIGHTING PLAN
SCALE: AS INDICATED
0 4 8 16 24 32
1 inch plotted — Feet
If measurement is other than 1 inch then the plot is reduced.

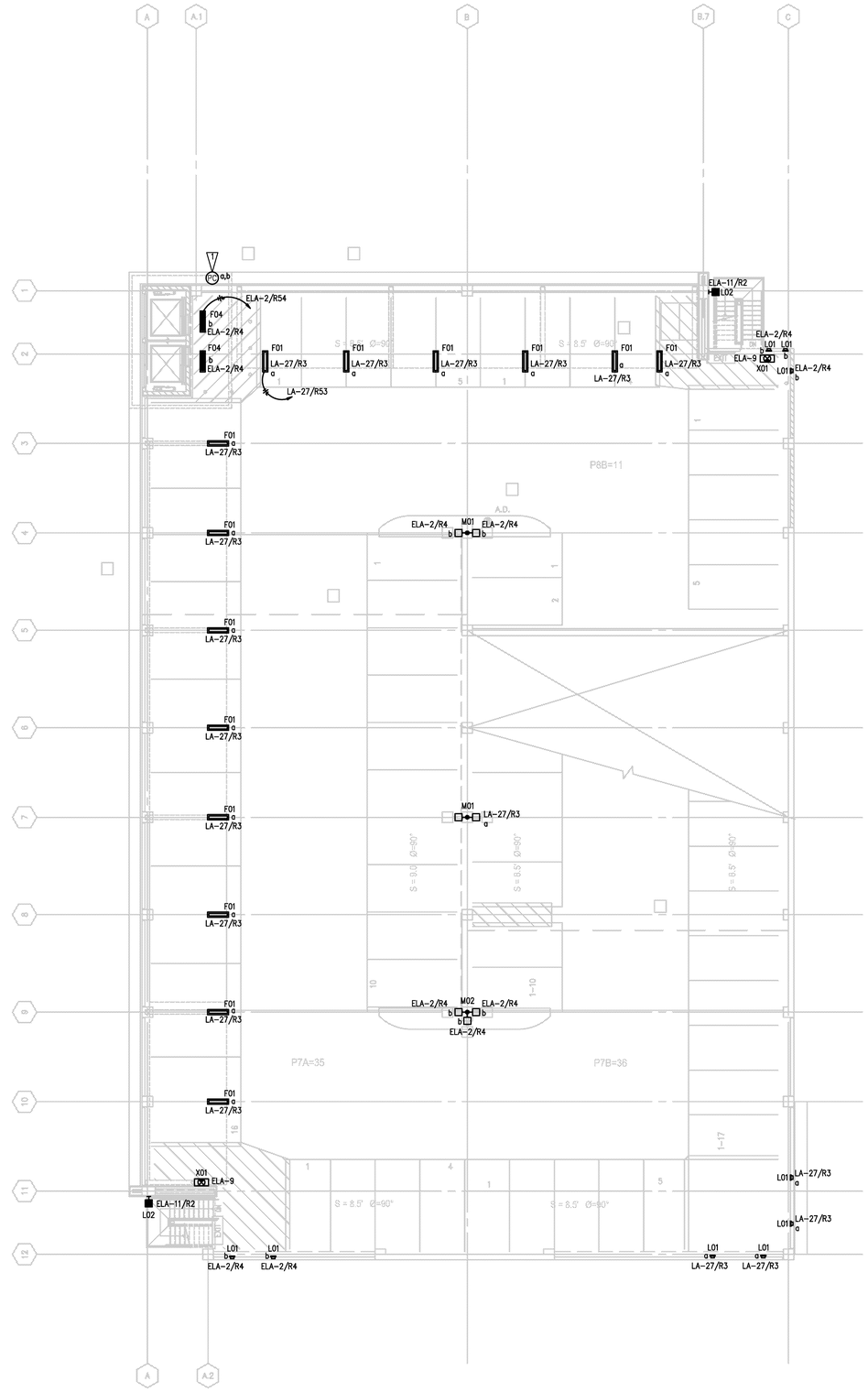


2 E2.05 P7 LEVEL LIGHTING PLAN
SCALE: AS INDICATED
0 4 8 16 24 32
1 inch plotted — Feet
If measurement is other than 1 inch then the plot is reduced.

## GENERAL NOTES:

1. FOR CORRECT WIRE SIZES ON BRANCH CIRCUITS ABOVE 100 FT. LONG, REFER TO VOLTAGE DROP SCHEDULE ON E5.01 (FINAL WIRE COLUMN), CONTRACTOR TO VERIFY DISTANCES IN FIELD BEFORE ROUGH-IN.
2. FOR ALL MULTI CIRCUIT HOMERUNS WITH SHARED NEUTRAL, PROVIDE BREAKER HANDLE TIES AT THE PANEL PER NEC 210.4(B).
3. REFER TO SHEET E3.01 FOR LOCATION OF ALL PANELS IN THE MAIN ELECTRICAL ROOM (B2 LEVEL).
4. REFER TO SHEET E0.2 FOR LIGHTING FIXTURE SCHEDULE.
5. REFER TO SHEET E0.2 FOR LCP SCHEDULE AND LOW VOLTAGE CONTROL DESIGNATIONS.
6. OCCUPANCY SENSORS ARE SHOWN FOR REFERENCE ONLY. CONTRACTOR TO PROVIDE SHOP DRAWINGS FOR APPROVAL PRIOR TO PURCHASE.
7. PHOTOCELL MANUFACTURER TO PROVIDE SHOP DRAWINGS TO CONFIRM RECOMMENDED LOCATIONS PRIOR TO ROUGH-IN.
8. PROVIDE UNSWITCHED HOT CONDUCTOR TO ALL EXIT SIGNS.
9. ALL SHADED LIGHT FIXTURES TO BE CONNECTED TO EMERGENCY POWER.

## FLAG NOTES:

1. PHOTOCELL CONTROL MOUNTED AT ROOF TOP TO CONTROL TOP LEVEL LIGHTING. ROUTE 3/4" CONDUIT AND WIRING TO LIGHTING CONTROL PANEL IN MAIN ELECTRICAL ROOM.
2. PHOTOCELL CONTROL. ROUTE 3/4" CONDUIT WITH CAT-5 CABLE TO LIGHTING CONTROL PANEL LOCATED IN ELECTRICAL ROOM.
3. DASHED LINES INDICATE DAYLIGHT CONTROL ZONES. FIXTURES WITHIN DAYLIGHT CONTROL ZONES TO BE CONTROLLED BY IN-LINE CEILING MOUNTED PHOTO-SENSOR. ROUTE LUMINAIRE CIRCUITS THROUGH PHOTO-SENSOR.

**County of San Diego**
**Cedar & Kettner**
**Development Project**
San Diego, California

McCARTHY
20401 S.W. BIRCH STREET SUITE 300
Newport Beach, California 92660


Architect
IPD
Alameda
Irvine
Los Angeles
Architecture / Engineering / Consulting
www.ipd-global.com
2 Faraday, Suite 101, Irvine CA 92618
Phone 949 595 8004 Fax 949 595 8011

SPARLING
WORK TOGETHER | STAND APART™
9191 Towne Centre Drive, Suite 220
San Diego, California 92122
858-622-2700 800-667-0610
www.sparling.com


REGISTERED PROFESSIONAL ENGINEER
PAUL K. ERICKSON
No. 11219
ELECTRICAL
STATE OF CALIFORNIA

| Revision | Date |
|---|---|
| 100% DESIGN DEVELOPMENT | 10/23/2013 |
| 90% CDs - 1ST PLAN CHECK | 12/24/2013 |
| 2ND PLAN CHECK | 04/23/14 |

| | |
|---|---|
| Date | |
| IPD Job No. | 13-813 |
| Drawn By | SPARLING |
| Checked By | LGR/PKE |
| Scale | 3/32"=1' |

CONSTRUCTION DOCUMENTS

Drawing Title
P6 AND P7 LEVEL LIGHTING PLANS

Drawing No.
E2.05


T:\813\813139\CAD-BIM\C205 Apr 22, 2014 12:05 PM By:EALVAREZ
IPD, Inc.

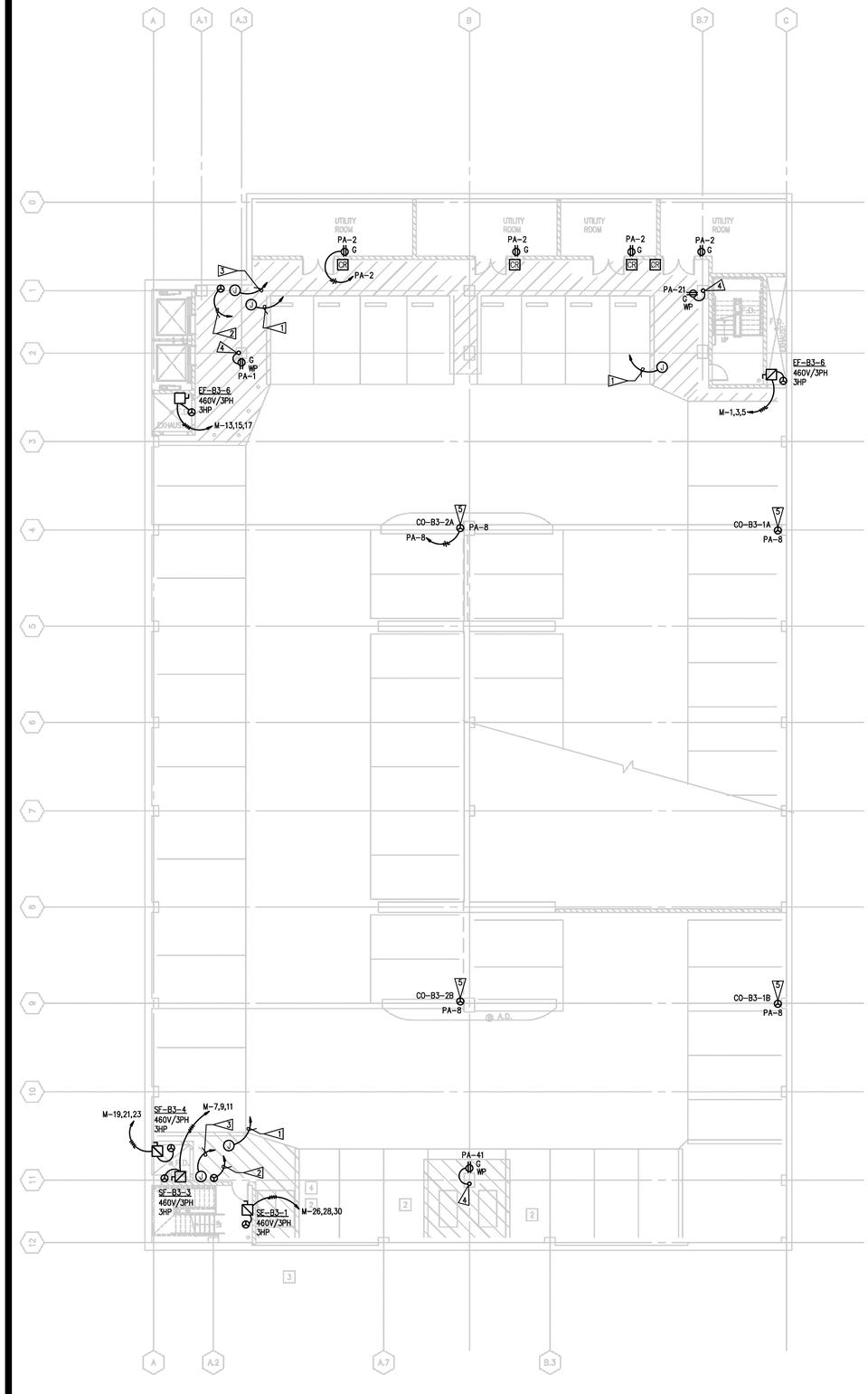


2 E3.01 B3 LEVEL POWER AND SYSTEMS PLAN
SCALE: AS INDICATED
0 4 8 16 24 32
1 inch plotted Feet
If measurement is other than 1 inch then the plot is reduced.

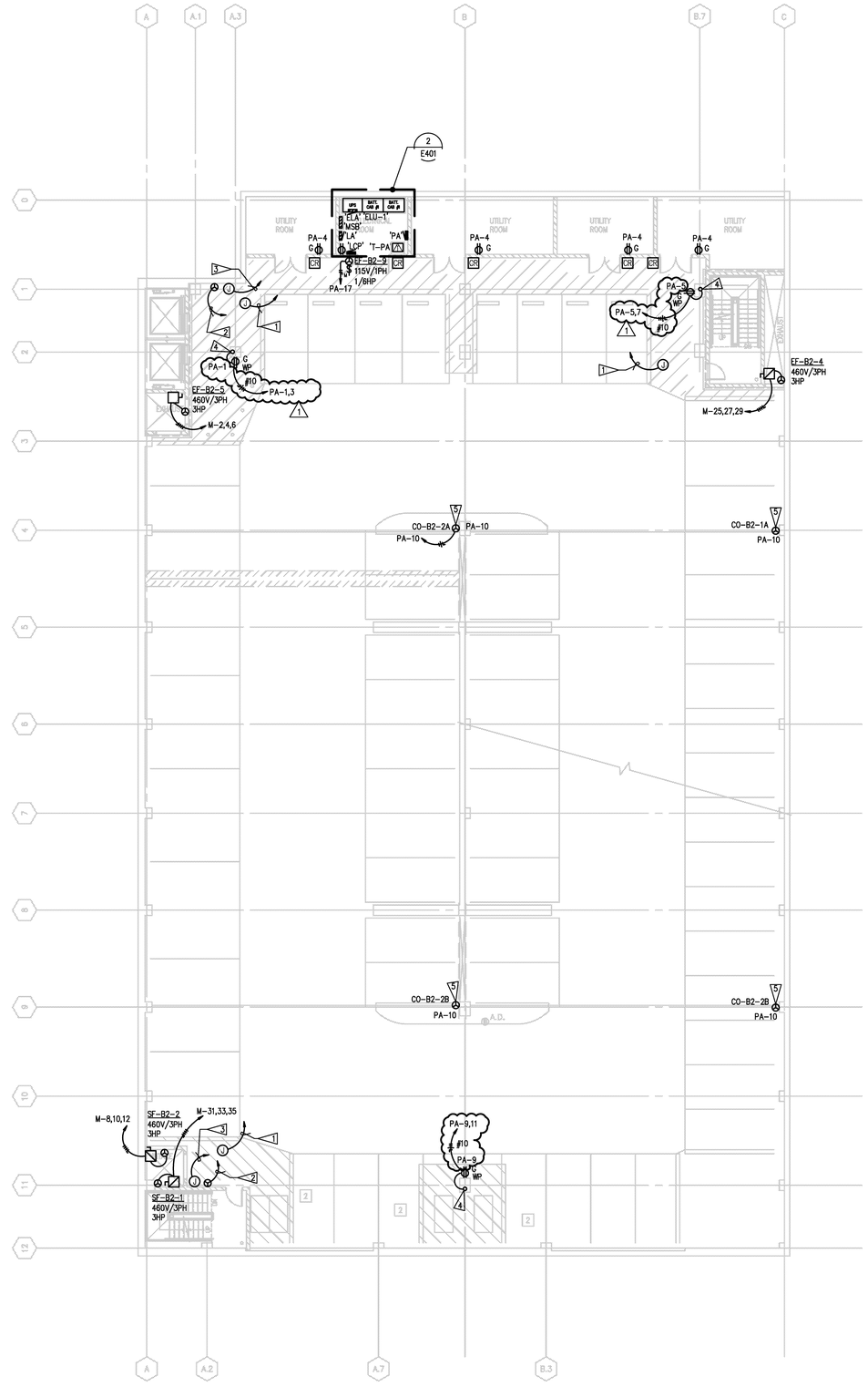


1 E3.01 B2 LEVEL POWER AND SYSTEMS PLAN
SCALE: AS INDICATED
0 4 8 16 24 32
1 inch plotted Feet
If measurement is other than 1 inch then the plot is reduced.

## GENERAL NOTES:

1. FOR CORRECT WIRE SIZES ON BRANCH CIRCUITS ABOVE 100 FT. LONG, REFER TO VOLTAGE DROP SCHEDULE ON E5.01 (FINAL WIRE COLUMN), CONTRACTOR TO VERIFY DISTANCES IN FIELD BEFORE ROUGH-IN.
2. FOR ALL MULTI CIRCUIT HOMERUNS WITH SHARED NEUTRAL, PROVIDE BREAKER HANDLE TIES AT THE PANEL PER NEC 210.4(B).
3. REFER TO MECHANICAL DRAWINGS FOR EXACT LOCATION OF EQUIPMENT. VERIFY EQUIPMENT MANUFACTURER'S RECOMMENDATIONS FOR CORRECT WIRE AND CIRCUIT BREAKER SIZES BEFORE ROUGH-IN.

## FLAG NOTES:

1. FUTURE CAMERA LOCATION. PROVIDE FLUSH JUNCTION BOX AND (1)1" CONDUIT TO MDF ROOM.
2. BLUE PHONE POWER. PROVIDE WALL FLUSH JUNCTION BOX AND (1) 3/4" CONDUIT FOR 120V POWER TO ELECTRICAL ROOM.
3. BLUE PHONE DATA. PROVIDE WALL FLUSH JUNCTION BOX AND (1) 1" CONDUIT TO MDF ROOM.
4. CONDUIT RISER GOING UP TO FEED DEDICATED POWER RECEPTACLES AT THE OTHER LEVELS.
5. POWER FOR MECHANICAL EQUIPMENT CONTROLS.

**County of San Diego**
**Cedar & Kettner**
**Development Project**
San Diego, California

McCARTHY
20401 S.W. BIRCH STREET SUITE 300
Newport Beach, California 92660


Architect
IPD
Alameda
Irvine
Los Angeles
Architecture / Engineering / Consulting
www.ipd-global.com
2 Faraday, Suite 101, Irvine CA 92618
Phone 949 595 8004 Fax 949 595 8011

SPARLING
WORK TOGETHER | STAND APART™
9191 Towne Centre Drive, Suite 220
San Diego, California 92122
858-622-2700 800-667-0610
www.sparling.com


REGISTERED PROFESSIONAL ENGINEER
PAUL K. ERICSON
No. 11219
exp. 06/30/2015
STATE OF CALIFORNIA

| Revision | Date |
|---|---|
| 100% DESIGN DEVELOPMENT | 10/23/2013 |
| 90% CDs - 1ST PLAN CHECK | 12/24/2013 |
| 2ND PLAN CHECK | 04/23/14 |

| | |
|---|---|
| Date | |
| IPD Job No. | 13-813 |
| Drawn By | SPARLING |
| Checked By | LGR/PKE |
| Scale | 3/32"=1' |

CONSTRUCTION DOCUMENTS

Drawing Title
B3 AND B2 LEVEL POWER AND SYSTEMS PLANS

Drawing No.
**E3.01**


T:\B18139\CAD-BIM\E301 Apr 22, 2014 10:16 AM By:EALVAREZ
IPD, Inc.

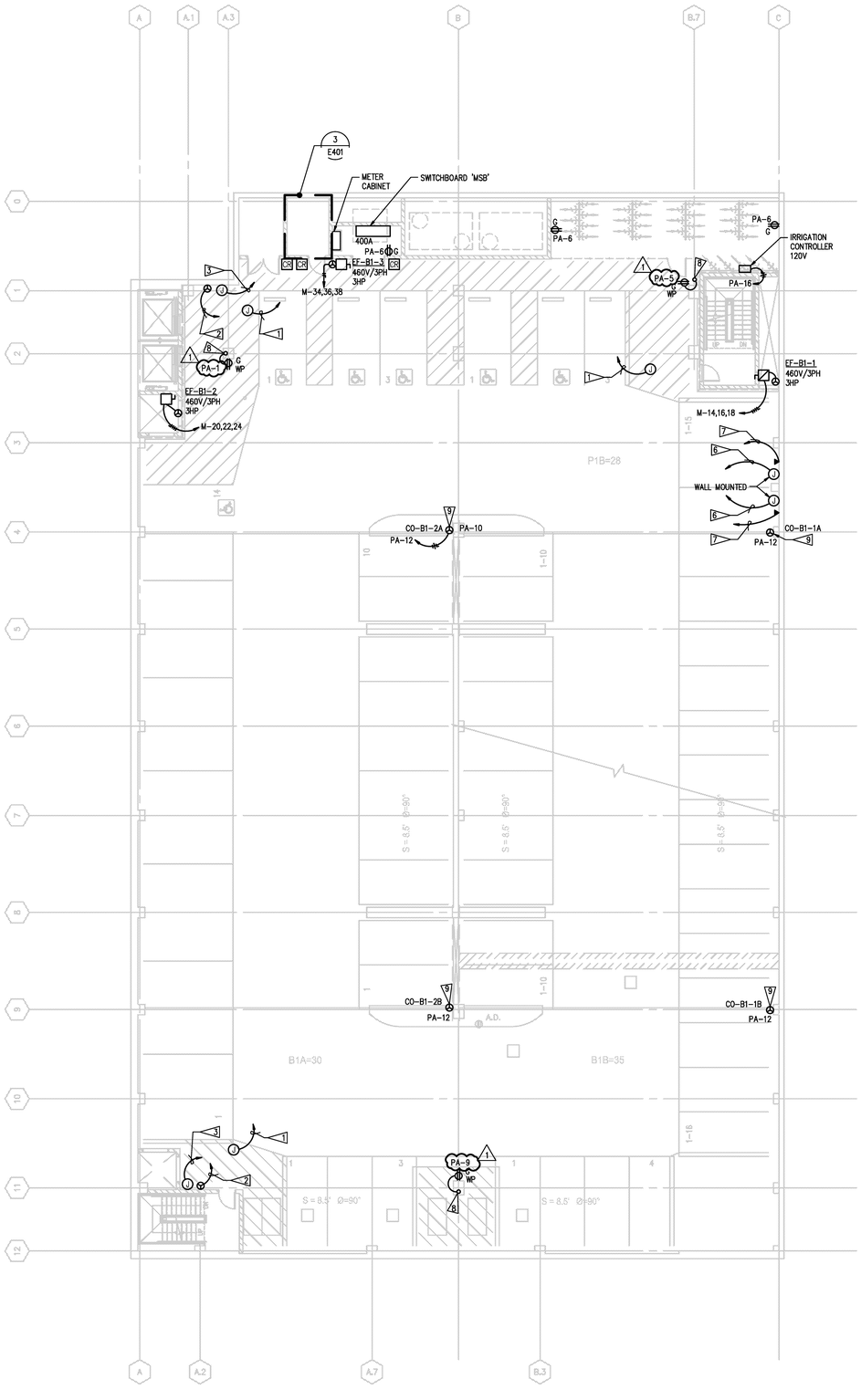


2 E3.02 B1 LEVEL POWER AND SYSTEMS PLAN
SCALE: AS INDICATED
0 4 8 16 24 32 Feet
1 inch plotted
If measurement is other than 1 inch then the plot is reduced.

N

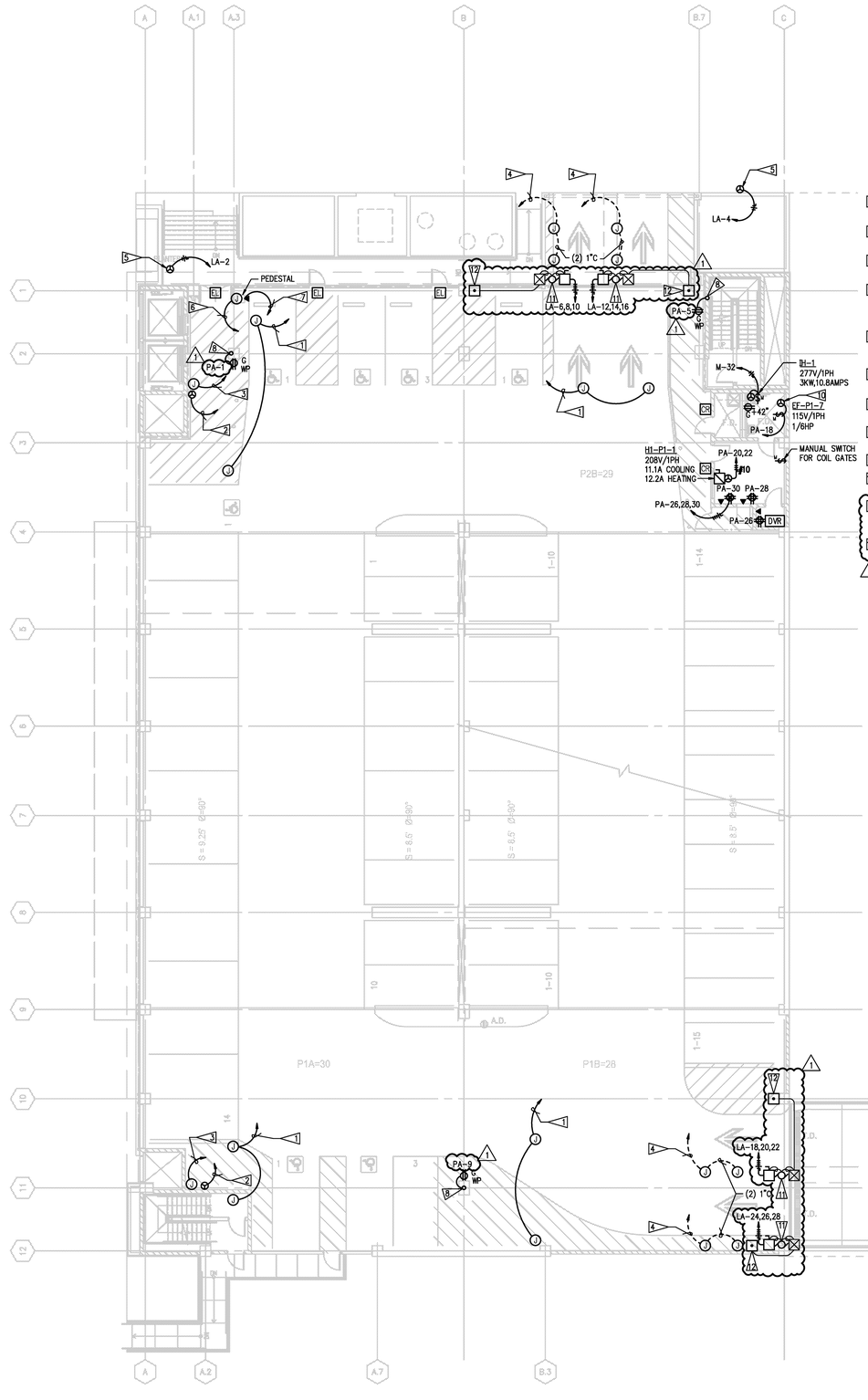


1 E3.02 P1 LEVEL POWER AND SYSTEMS PLAN
SCALE: AS INDICATED
0 4 8 16 24 32 Feet
1 inch plotted
If measurement is other than 1 inch then the plot is reduced.

N

## GENERAL NOTES:

1. FOR CORRECT WIRE SIZES ON BRANCH CIRCUITS ABOVE 100 FT. LONG, REFER TO VOLTAGE DROP SCHEDULE ON E5.01 (FINAL WIRE COLUMN), CONTRACTOR TO VERIFY DISTANCES IN FIELD BEFORE ROUGH-IN.
2. FOR ALL MULTI CIRCUIT HOMERUNS WITH SHARED NEUTRAL, PROVIDE BREAKER HANDLE TIES AT THE PANEL PER NEC 210.4(B).
3. REFER TO MECHANICAL DRAWINGS FOR EXACT LOCATION OF EQUIPMENT. VERIFY EQUIPMENT MANUFACTURER'S RECOMMENDATIONS FOR CORRECT WIRE AND CIRCUIT BREAKER SIZES BEFORE ROUGH-IN.

## FLAG NOTES:

1. FUTURE CAMERA LOCATION. PROVIDE FLUSH JUNCTION BOX AND (1) 1" CONDUIT TO MDF ROOM.
2. BLUE PHONE POWER. PROVIDE WALL FLUSH JUNCTION BOX AND (1) 3/4" CONDUIT FOR 120V POWER TO ELECTRICAL ROOM.
3. BLUE PHONE DATA. PROVIDE WALL FLUSH JUNCTION BOX AND (1) 1" CONDUIT TO MDF ROOM.
4. PROVIDE (2) 1" CONDUITS TO CONCRETE ISLAND AT THE ENTRY/EXIT LOCATION. ONE FROM ELECTRICAL ROOM FOR 120V POWER AND ONE FROM MDF ROOM FOR DATA. COORDINATE WITH ARCHITECTURAL DRAWINGS BEFORE ROUGH-IN.
5. POWER FOR SIGNAGE. PROVIDE WITH CODE REQUIRED DISCONNECT SWITCH. COORDINATE EXACT LOCATION AND MOUNTING HEIGHT WITH ARCHITECTURAL DRAWINGS BEFORE ROUGH-IN.
6. FUTURE ELECTRICAL VEHICLE CHARGING STATION. PROVIDE FLUSH JUNCTION BOX AND (1) 1" CONDUIT TO ELECTRICAL ROOM.
7. PROVIDE FLUSH JUNCTION BOX AND 1" CONDUIT TO MDF FOR DATA CONNECTION.
8. CONDUIT RISER GOING UP TO FEED DEDICATED POWER RECEPTACLES AT THE OTHER LEVELS.
9. POWER FOR MECHANICAL EQUIPMENT CONTROLS.
10. POWER FOR EXHAUST FAN. FOR CONTROL, INTERCONNECT WIRING TO LIGHT SWITCH.
11. PROVIDE 480V, 3PH, 5HP POWER CONNECTION TO ROLL-UP DOOR WITH REVERSING MOTOR STARTER (BY INSTALLER) AND 20A/3P DISCONNECT SWITCH, NEMA 1, WITH FUSES PER MOTOR FLA.
12. PROVIDE PUSH BUTTON STATION WITH KEY LOCKOUT. VERIFY LOCATION AND CONNECTION.

**County of San Diego**
**Cedar & Kettner**
**Development Project**
San Diego, California

McCARTHY
20401 S.W. BIRCH STREET SUITE 300
Newport Beach, California 92660

Architect
IPD
Alameda
Irvine
Los Angeles
Architecture / Engineering / Consulting
www.ipd-global.com
2 Faraday, Suite 101, Irvine CA 92618
Phone 949 595 8004 Fax 949 595 8011

SPARLING
WORK TOGETHER | STAND APART™
9191 Towne Centre Drive, Suite 220
San Diego, California 92122
858-622-2700 800-667-0610
www.sparling.com

REGISTERED PROFESSIONAL ENGINEER
PAUL K. ERICSSON
No. 11219
Exp. 06/30/2015
ELECTRICAL
STATE OF CALIFORNIA

| Revision | Date |
|---|---|
| 100% DESIGN DEVELOPMENT | 10/23/2013 |
| 90% CDs - 1ST PLAN CHECK | 12/24/2013 |
| 2ND PLAN CHECK | 04/23/14 |

| | |
|---|---|
| Date | |
| IPD Job No. | 13-813 |
| Drawn By | SPARLING |
| Checked By | LGR/PKE |
| Scale | 3/32"=1' |

CONSTRUCTION DOCUMENTS

Drawing Title
B1 AND P1 LEVEL POWER AND SYSTEMS PLANS

Drawing No.
**E3.02**

T:\[813813]\CAD-BIM\E302 Apr 22, 2014 12:01 PM By:EALVAREZ
IPD, Inc.

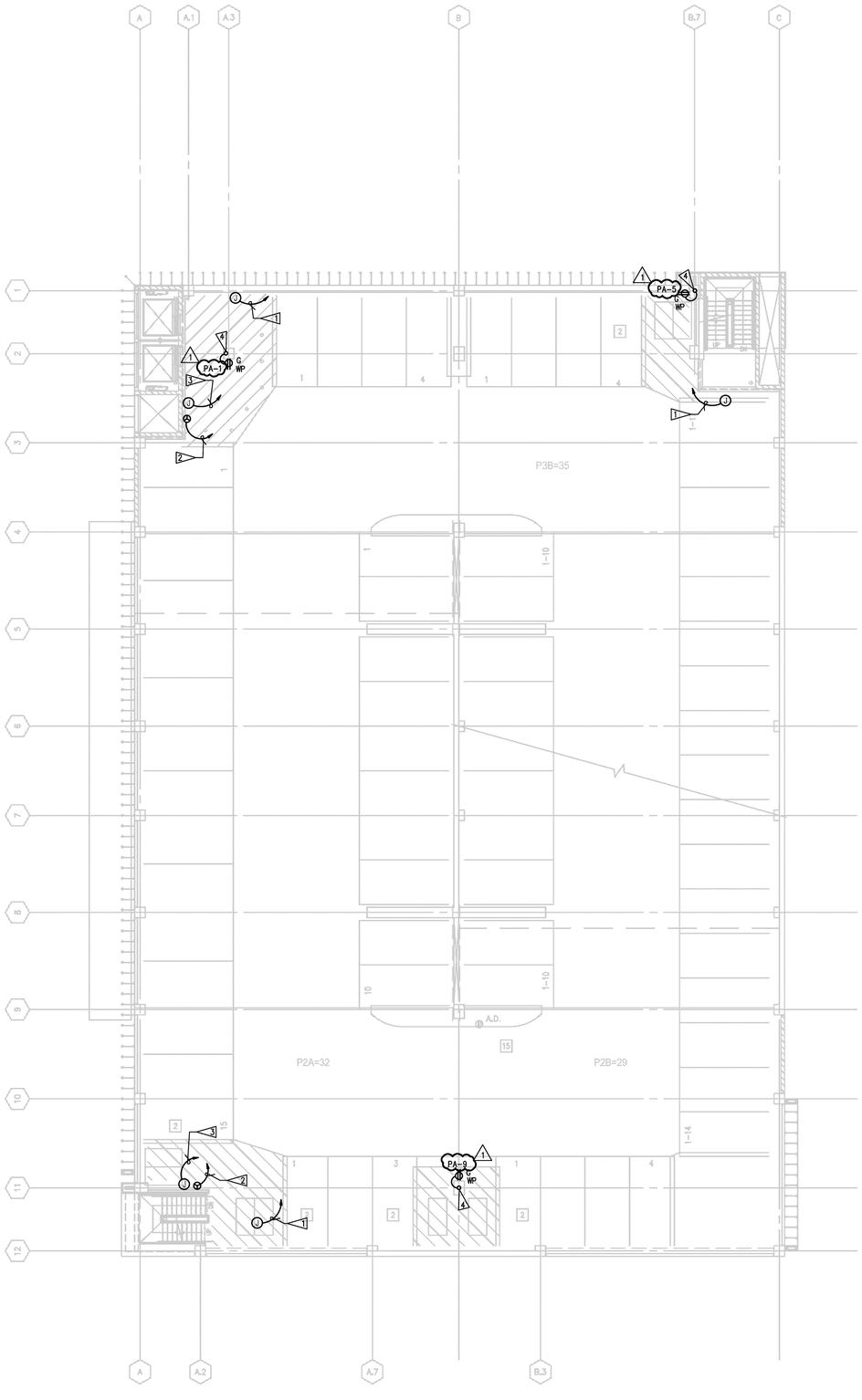


1 E3.03 P2 LEVEL POWER AND SYSTEMS PLAN
SCALE: AS INDICATED
0 4 8 16 24 32
1 inch plotted — Feet
If measurement is other than 1 inch then the plot is reduced.

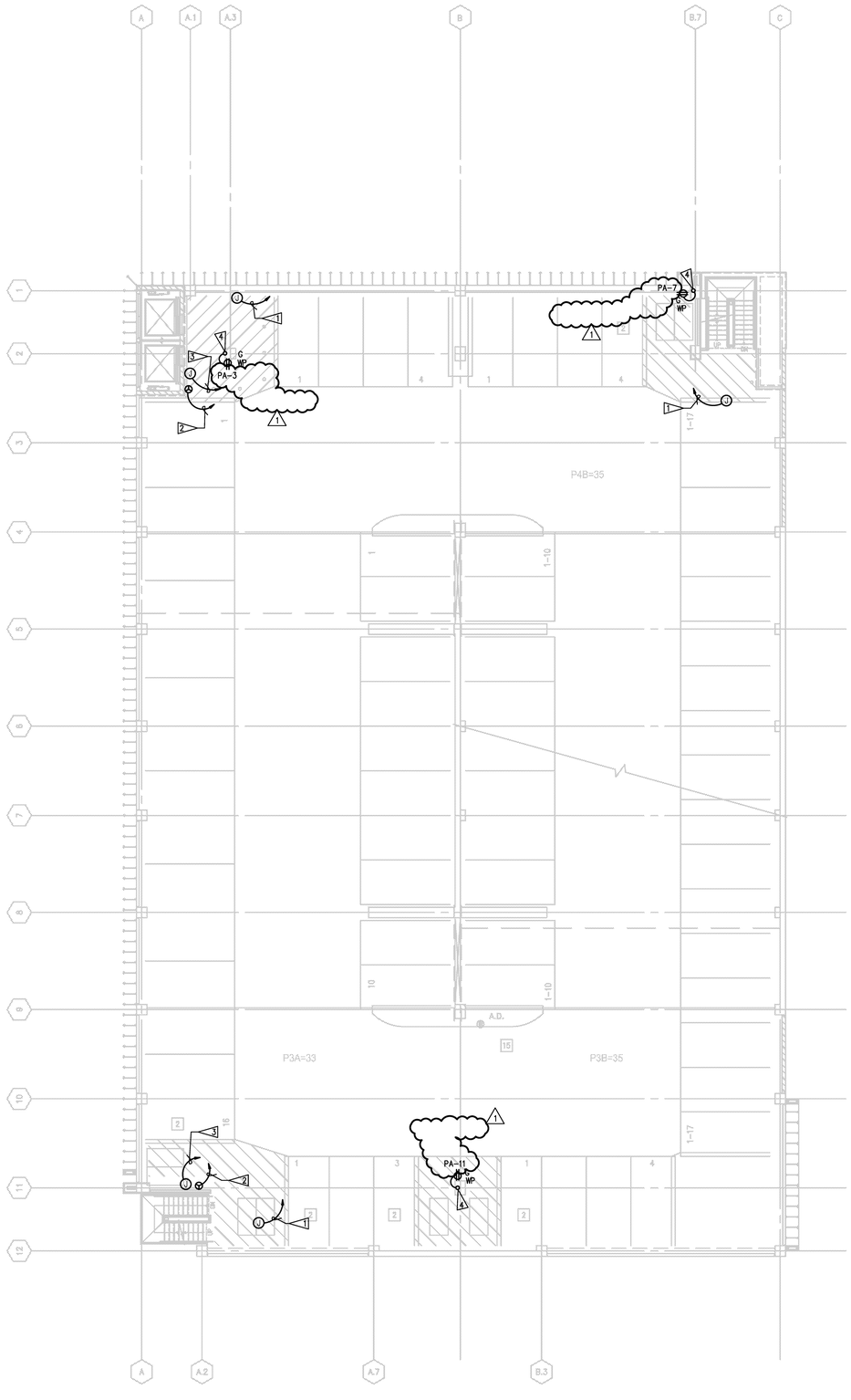


2 E3.03 P3 LEVEL POWER AND SYSTEMS PLAN
SCALE: AS INDICATED
0 4 8 16 24 32
1 inch plotted — Feet
If measurement is other than 1 inch then the plot is reduced.

## GENERAL NOTES:

1. FOR CORRECT WIRE SIZES ON BRANCH CIRCUITS ABOVE 100 FT. LONG, REFER TO VOLTAGE DROP SCHEDULE ON E5.01 (FINAL WIRE COLUMN), CONTRACTOR TO VERIFY DISTANCES IN FIELD BEFORE ROUGH-IN.
2. FOR ALL MULTI CIRCUIT HOMERUNS WITH SHARED NEUTRAL, PROVIDE BREAKER HANDLE TIES AT THE PANEL PER NEC 210.4(B).

## FLAG NOTES:

1. FUTURE CAMERA LOCATION. PROVIDE FLUSH JUNCTION BOX AND (1)1" CONDUIT TO MDF ROOM.
2. BLUE PHONE POWER. PROVIDE WALL FLUSH JUNCTION BOX AND (1) 3/4" CONDUIT FOR 120V POWER TO ELECTRICAL ROOM.
3. BLUE PHONE DATA. PROVIDE WALL FLUSH JUNCTION BOX AND (1) 1" CONDUIT TO MDF ROOM.
4. CONDUIT RISER GOING UP TO FEED DEDICATED POWER RECEPTACLES AT THE OTHER LEVELS.

**County of San Diego**
**Cedar & Kettner**
**Development Project**
San Diego, California

McCARTHY

20401 S.W. BIRCH STREET SUITE 300
Newport Beach, California 92660

Architect

IPD

Alameda
Irvine
Los Angeles

Architecture / Engineering / Consulting
www.ipd-global.com

2 Faraday, Suite 101, Irvine CA 92618
Phone 949 595 8004 Fax 949 595 8011

SPARLING
WORK TOGETHER | STAND APART™
9191 Towne Centre Drive, Suite 220
San Diego, California 92122
858-622-2700 800-667-0610
www.sparling.com

REGISTERED PROFESSIONAL ENGINEER
PAUL K. ERICKSON
No. 11219
Exp. 06/30/2015
ELECTRICAL
STATE OF CALIFORNIA

| Revision | Date |
|---|---|
| 100% DESIGN DEVELOPMENT | 10/23/2013 |
| 90% CDs - 1ST PLAN CHECK | 12/24/2013 |
| 2ND PLAN CHECK | 04/23/14 |

| | |
|---|---|
| Date | |
| IPD Job No. | 13-813 |
| Drawn By | SPARLING |
| Checked By | LGR/PKE |
| Scale | 3/32"=1' |

CONSTRUCTION DOCUMENTS

Drawing Title
P2 AND P3 LEVEL POWER AND SYSTEMS PLANS

Drawing No.
**E3.03**

T:\813813\CAD-BIM\E303 Apr 22, 2014 10:20 AM By:EALVAREZ

IPD, Inc.

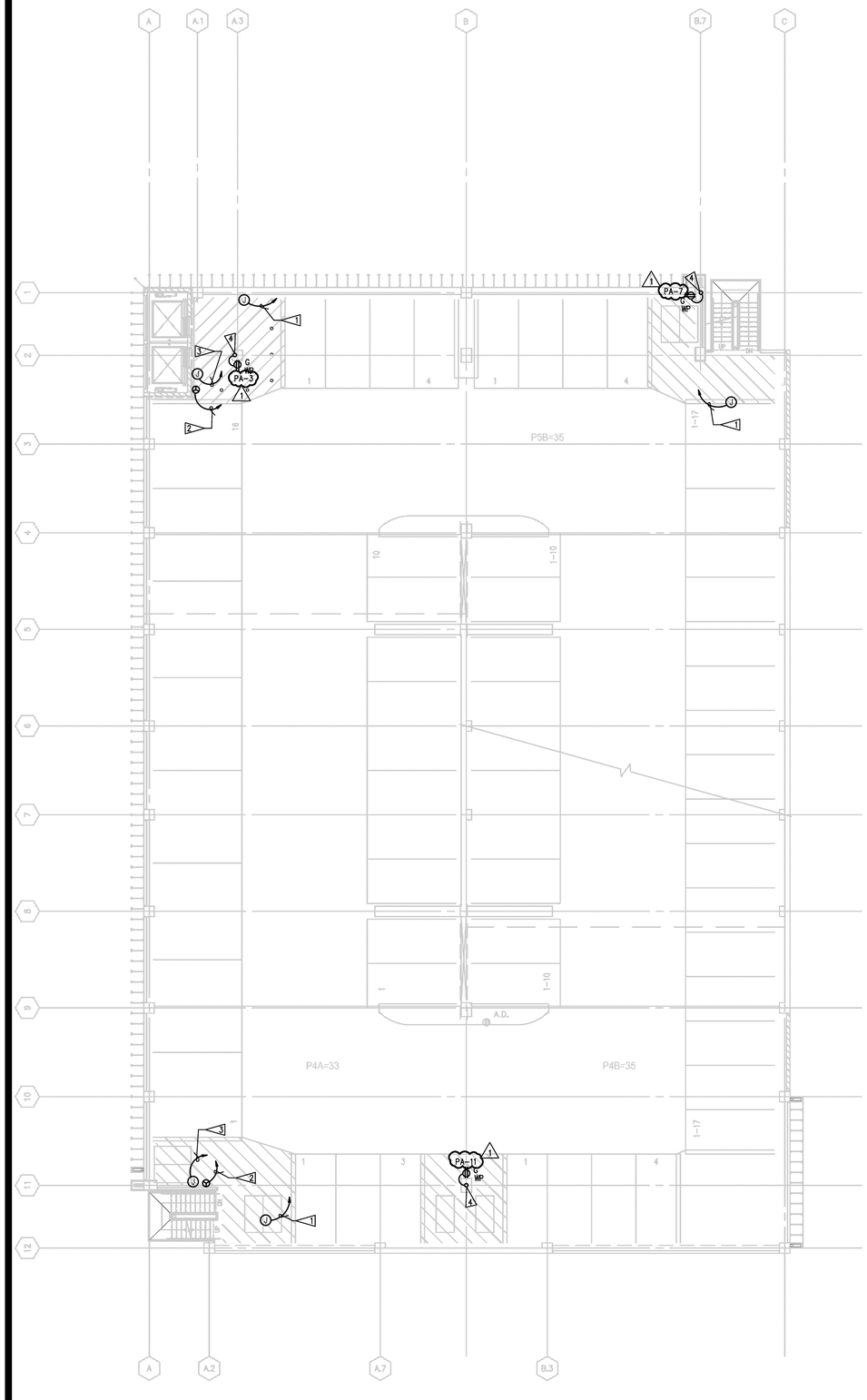


1 E3.04 P4 LEVEL POWER AND SYSTEMS PLAN
SCALE: AS INDICATED
0 4 8 16 24 32
1 inch plotted Feet
If measurement is other than 1 inch then the plot is reduced.

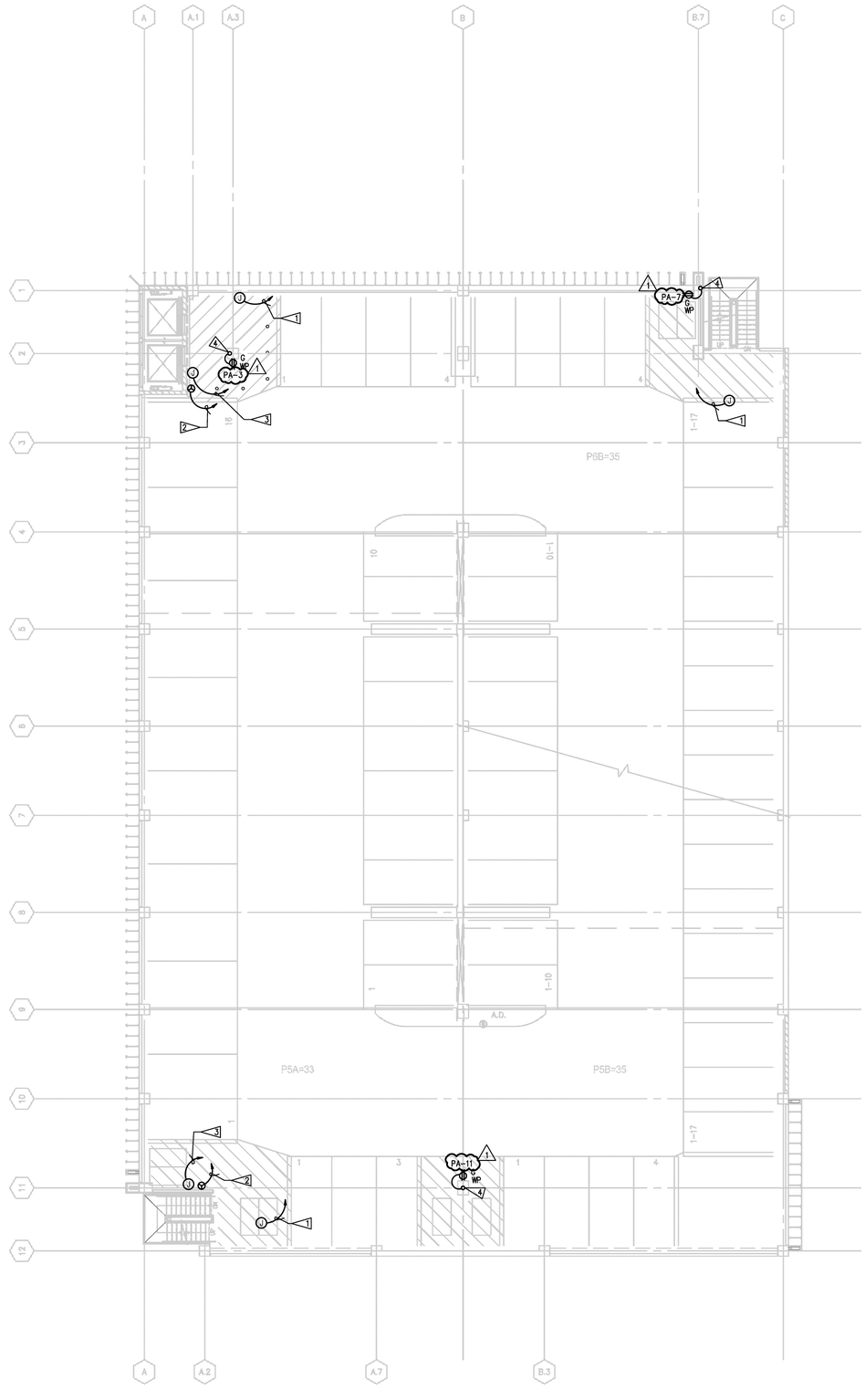


2 E3.04 P5 LEVEL POWER AND SYSTEMS PLAN
SCALE: AS INDICATED
0 4 8 16 24 32
1 inch plotted Feet
If measurement is other than 1 inch then the plot is reduced.

## GENERAL NOTES:

1. FOR CORRECT WIRE SIZES ON BRANCH CIRCUITS ABOVE 100 FT. LONG, REFER TO VOLTAGE DROP SCHEDULE ON E5.01 (FINAL WIRE COLUMN), CONTRACTOR TO VERIFY DISTANCES IN FIELD BEFORE ROUGH-IN.
2. FOR ALL MULTI CIRCUIT HOMERUNS WITH SHARED NEUTRAL, PROVIDE BREAKER HANDLE TIES AT THE PANEL PER NEC 210.4(B).

## FLAG NOTES:

1. FUTURE CAMERA LOCATION. PROVIDE FLUSH JUNCTION BOX AND (1) 1" CONDUIT TO MDF ROOM.
2. BLUE PHONE POWER. PROVIDE WALL FLUSH JUNCTION BOX AND (1) 3/4" CONDUIT FOR 120V POWER TO ELECTRICAL ROOM.
3. BLUE PHONE DATA. PROVIDE WALL FLUSH JUNCTION BOX AND (1) 1" CONDUIT TO MDF ROOM.
4. CONDUIT RISER GOING UP TO FEED DEDICATED POWER RECEPTACLES AT THE OTHER LEVELS.

**County of San Diego**
**Cedar & Kettner**
**Development Project**
San Diego, California

McCARTHY
20401 S.W. BIRCH STREET SUITE 300
Newport Beach, California 92660

Architect
IPD
Alameda
Irvine
Los Angeles
Architecture / Engineering / Consulting
www.ipd-global.com
2 Faraday, Suite 101, Irvine CA 92618
Phone 949 595 8004 Fax 949 595 8011

SPARLING
WORK TOGETHER | STAND APART™
9191 Towne Centre Drive, Suite 220
San Diego, California 92122
858-622-2700 800-667-0610
www.sparling.com

REGISTERED PROFESSIONAL ENGINEER
PAUL K. ERICKSON
No. 11219
exp.06/30/2015
STATE OF CALIFORNIA

| Revision | Date |
|---|---|
| 100% DESIGN DEVELOPMENT | 10/23/2013 |
| 90% CDs - 1ST PLAN CHECK | 12/24/2013 |
| 2ND PLAN CHECK | 04/23/14 |

| | |
|---|---|
| Date | |
| IPD Job No. | 13-813 |
| Drawn By | SPARLING |
| Checked By | LGR/PKE |
| Scale | 3/32"=1' |

CONSTRUCTION DOCUMENTS

Drawing Title
P4 AND P5 LEVEL POWER AND SYSTEMS PLANS

Drawing No.
**E3.04**

T:\B18139\CAD-BIM\E304 Apr 22, 2014 9:28 AM By:EALVAREZ
IPD, Inc.

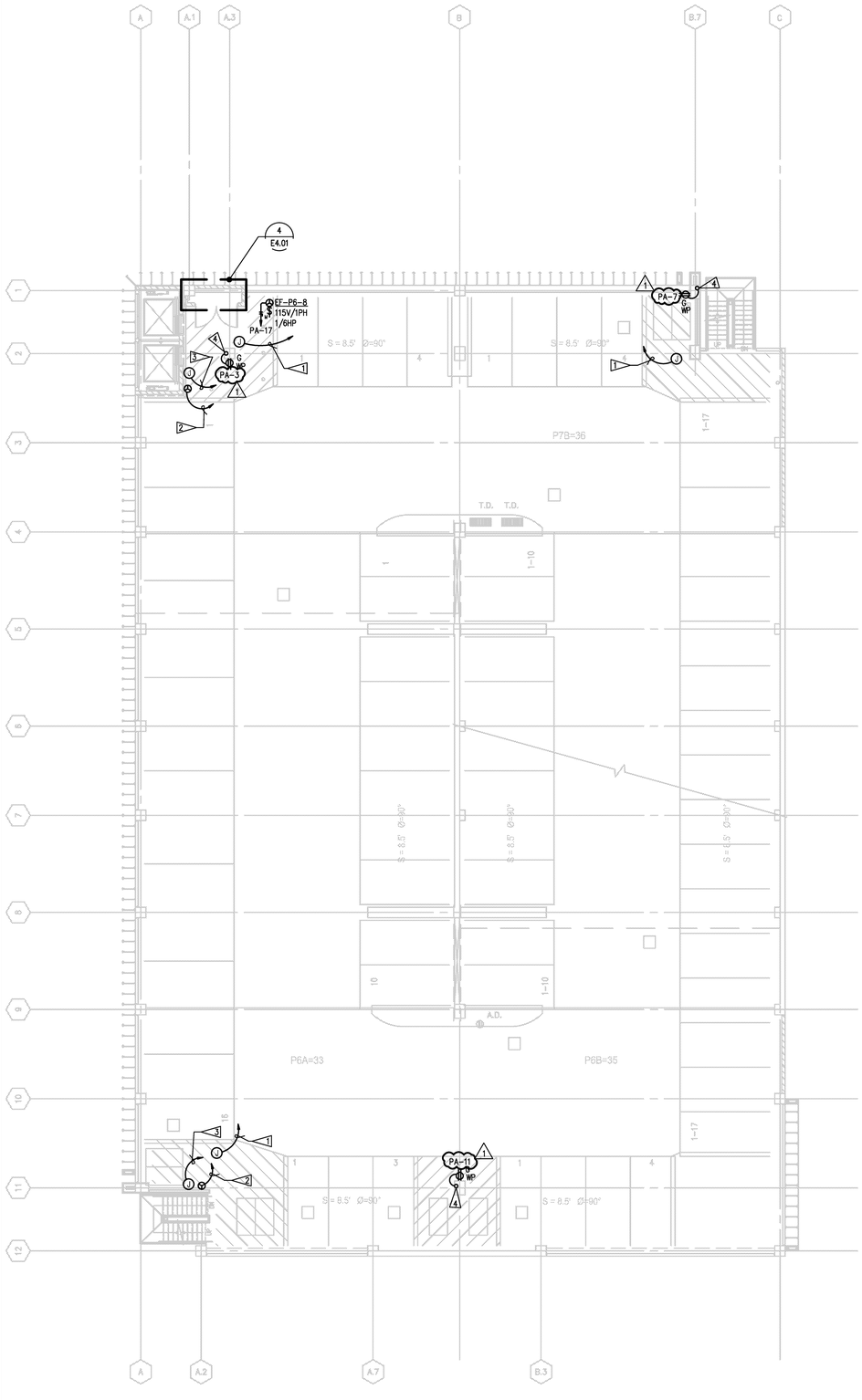


1 E3.05 P6 LEVEL POWER AND SYSTEMS PLAN
SCALE: AS INDICATED
0 4 8 16 24 32
1 inch plotted — Feet
If measurement is other than 1 inch then the plot is reduced.

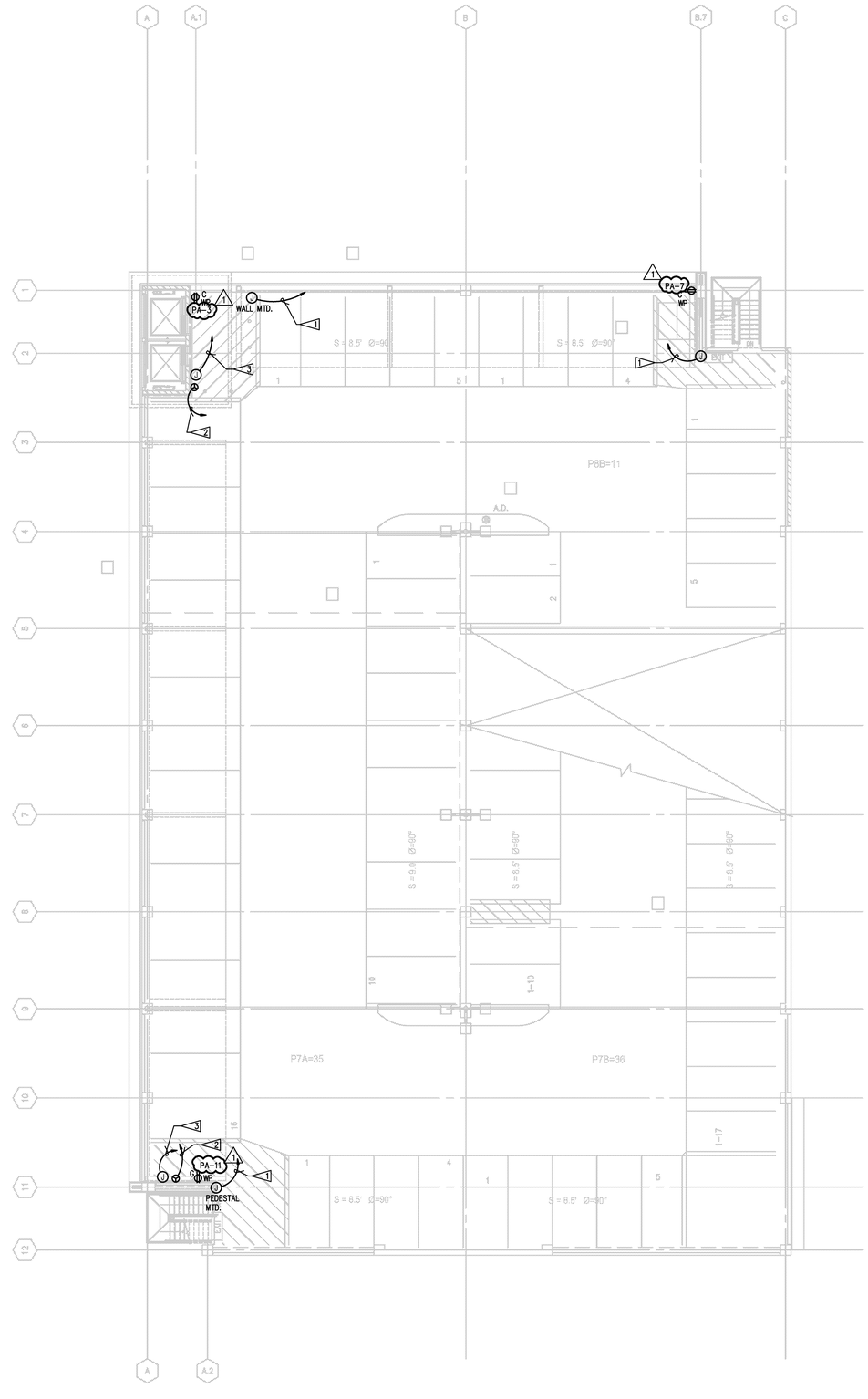


2 E3.05 P7 LEVEL POWER AND SYSTEMS PLAN
SCALE: AS INDICATED
0 4 8 16 24 32
1 inch plotted — Feet
If measurement is other than 1 inch then the plot is reduced.

## GENERAL NOTES:

1. FOR CORRECT WIRE SIZES ON BRANCH CIRCUITS ABOVE 100 FT. LONG, REFER TO VOLTAGE DROP SCHEDULE ON E5.01 (FINAL WIRE COLUMN), CONTRACTOR TO VERIFY DISTANCES IN FIELD BEFORE ROUGH-IN.
2. FOR ALL MULTI CIRCUIT HOMERUNS WITH SHARED NEUTRAL, PROVIDE BREAKER HANDLE TIES AT THE PANEL PER NEC 210.4(B).

## FLAG NOTES:

1. FUTURE CAMERA LOCATION. PROVIDE FLUSH JUNCTION BOX AND (1) 1" CONDUIT TO MDF ROOM.
2. BLUE PHONE POWER. PROVIDE WALL FLUSH JUNCTION BOX AND (1) 3/4" CONDUIT FOR 120V POWER TO ELECTRICAL ROOM.
3. BLUE PHONE DATA. PROVIDE WALL FLUSH JUNCTION BOX AND (1) 1" CONDUIT TO MDF ROOM.
4. CONDUIT RISER GOING UP TO FEED DEDICATED POWER RECEPTACLES AT THE OTHER LEVELS.

**County of San Diego**
**Cedar & Kettner**
**Development Project**
San Diego, California

McCARTHY
20401 S.W. BIRCH STREET SUITE 300
Newport Beach, California 92660

Architect
IPD
Alameda
Irvine
Los Angeles
Architecture / Engineering / Consulting
www.ipd-global.com
2 Faraday, Suite 101, Irvine CA 92618
Phone 949 595 8004 Fax 949 595 8011

SPARLING
WORK TOGETHER | STAND APART™
9191 Towne Centre Drive, Suite 220
San Diego, California 92122
858-622-2700 800-667-0610
www.sparling.com

REGISTERED PROFESSIONAL ENGINEER
PAUL K. ERICSON
No. 11219
exp. 06/30/2015
ELECTRICAL
STATE OF CALIFORNIA

| Revision | Date |
|---|---|
| 100% DESIGN DEVELOPMENT | 10/23/2013 |
| 90% CDs - 1ST PLAN CHECK | 12/24/2013 |
| 2ND PLAN CHECK | 04/23/14 |

| | |
|---|---|
| Date | |
| IPD Job No. | 13-813 |
| Drawn By | SPARLING |
| Checked By | LGR/PKE |
| Scale | 3/32"=1' |

CONSTRUCTION DOCUMENTS

Drawing Title
P6 AND P7 LEVEL POWER AND SYSTEMS PLANS

Drawing No.
**E3.05**

T:\B18139\CAD-BIM\E305 Apr 22, 2014 10:41 AM By:EALVAREZ
IPD, Inc.

## GENERAL NOTES:

1. FOR BRANCH CIRCUITS ABOVE 100 FT. LONG, REFER TO VOLTAGE DROP SCHEDULE ON E5.1 (FINAL WIRE COLUMN), FOR CORRECT WIRE SIZES. CONTRACTOR TO VERIFY DISTANCES IN FIELD BEFORE ROUGH-IN.
2. FOR ALL MULTICIRCUIT HOMERUNS WITH SHARED NEUTRAL, PROVIDE BREAKER HANDLE TIES AT THE PANEL PER NEC 210.4(B).
3. REFER TO MECHANICAL DRAWINGS FOR EXACT LOCATION OF EQUIPMENT. VERIFY EQUIPMENT MANUFACTURER'S RECOMMENDATIONS FOR CORRECT WIRE AND CIRCUIT BREAKER SIZES BEFORE ROUGH-IN.

## FLAG NOTES:

1. REFER TO SINGLE LINE DIAGRAM ON E5.1 FOR CORRECT BREAKER CONDUIT AND WIRE SIZES.
2. PROVIDE CONCRETE MAINTENANCE PAD FOR EQUIPMENT.
3. PROVIDE 4'W x 8'H x 3/4"D PLYWOOD ALL AROUND THE ROOM MOUNTED VERTICALLY STARTING AT 2" ABOVE THE FINISHED FLOOR AND SECURE TO THE WALLS, PAINT PLYWOOD WITH 1-HR FIRE RATED PAINT.
4. SPACE SAVED FOR CONDUIT RISERS.
5. EQUIPMENT GROUND BAR. SEE DETAIL 1/E7.1 FOR MORE INFORMATION.
6. PROVIDE POWER FOR FACP. THE BREAKER AT THE PANEL SHALL HAVE A RED LOCKING DEVICE TO BLOCK THE HANDLE IN THE "ON" POSITION.

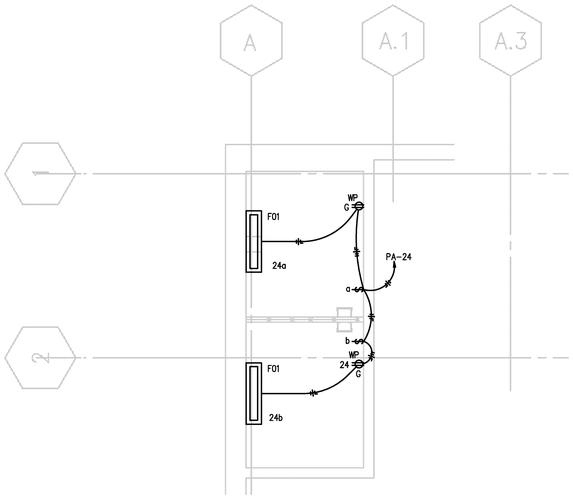


1 E4.01 ELEVATOR PIT
SCALE: 1/4" = 1'-0"

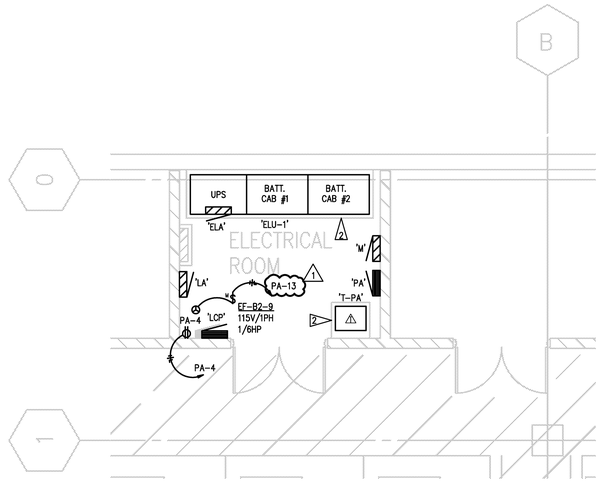


2 E4.01 B2 LEVEL ELECTRICAL ROOM
SCALE: 1/4" = 1'-0"

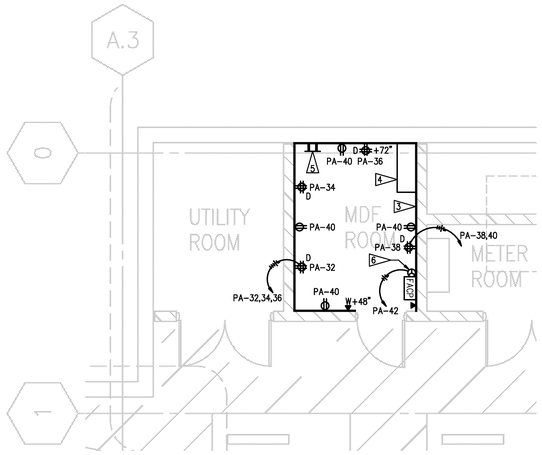


3 E4.01 MDF ROOM - B1 LEVEL
SCALE: 1/4" = 1'-0"

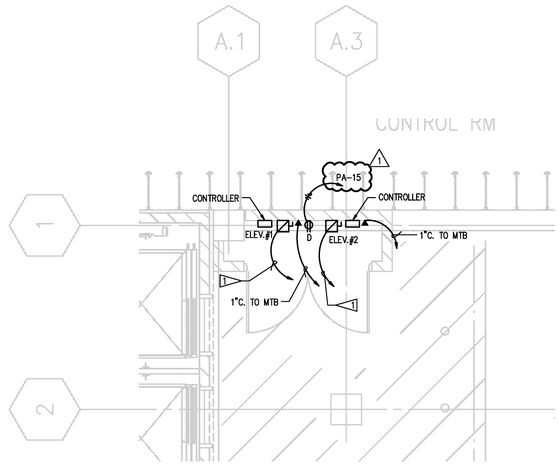


4 E4.01 ELEVATOR CONTROL ROOM - P6 LEVEL
SCALE: 1/4" = 1'-0"

**County of San Diego**
**Cedar & Kettner**
**Development Project**
San Diego, California

McCARTHY
20401 S.W. BIRCH STREET SUITE 300
Newport Beach, California 92660

Architect
IPD
Alameda
Irvine
Los Angeles
Architecture / Engineering / Consulting
www.ipd-global.com
2 Faraday, Suite 101, Irvine CA 92618
Phone 949 595 8004 Fax 949 595 8011

SPARLING
WORK TOGETHER | STAND APART™
9191 Towne Centre Drive, Suite 220
San Diego, California 92122
858-622-2700 800-667-0610
www.sparling.com

REGISTERED PROFESSIONAL ENGINEER
PAUL K. ERICKSON
No 11219
EXP. 06/30/2014
ELECTRICAL
STATE OF CALIFORNIA

| Revision | Date |
|---|---|
| 100% DESIGN DEVELOPMENT | 10/23/2013 |
| 90% CDs - 1ST PLAN CHECK | 12/24/2013 |
| 2ND PLAN CHECK | 04/23/14 |

| | |
|---|---|
| Date | |
| IPD Job No. | 13-813 |
| Drawn By | SPARLING |
| Checked By | LGR/PKE |
| Scale | AS NOTED |

CONSTRUCTION DOCUMENTS

Drawing Title
ENLARGED PLANS

Drawing No.
**E4.01**

T:\813139\CAD-BIM\E401 Apr 22, 2014 10:44 AM By:EALVAREZ
IPD, Inc.

## VOLTAGE DROP CALCULATION FOR LONG RUN BRANCH CIRCUITS

V5.07

PROJECT: CEDAR AND KETTNER PARKING STRUCTURE — SYSTEM VOLTAGE: 480
NUMBER: B18139 — SYSTEM PHASE: 3
VOLT DROP CALCULATION BASED ON IEEE Std. 241-1990, CHAPTER 3.6 75 DEGREE WIRE; LENGTHS SHOWN ARE FOR CALCULATION PURPOSES ONLY, NOT FOR BIDDING.
PREPARED BY: SPARLING INC — METRIC (Y/N): N — Date: 12/2/2013

| BRANCH CKT LENGTH | NOMINAL VOLTAGE | SYSTEM PHASE | STARTING VOLTAGE | POWER FACTOR | LENGTH OF CIRCUIT IN m | LENGTH OF CIRCUIT IN FEET | CURRENT IN AMPS | INITIAL WIRE SIZE | INITIAL WIRE RUNS | FINAL WIRE SIZE | FINAL WIRE RUNS | INITIAL EQ GND WIRE SIZE | REQ'D GND WIRE SIZE | LINE TO NEUTRAL Y/N | MAGNETIC CONDUIT Y/N | WIRE TYPE Copper Aluminum | VOLTS DROPPED | SINGLE RUN PERCENT | ADD % TO OTHER LOAD Y/N | ADD TO WHAT LOAD | ENDING VOLTAGE | TOTAL PERCENT DROPPED |
|---|---|---|---|---|---|---|---|---|---|---|---|---|---|---|---|---|---|---|---|---|---|---|
| 50 FEET | 120 | 1 | 120.0 | 85% | | 50.0 | 16.0 | 12 | 1 | 12 | 1 | 12 | 12 | Y | Y | C | 1.4 | 1.16% | N | | 118.6 | 1.16% |
| 100 FEET | 120 | 1 | 120.0 | 85% | | 100.0 | 16.0 | 12 | 1 | 12 | 1 | 12 | 12 | Y | Y | C | 2.8 | 2.31% | N | | 117.2 | 2.31% |
| 150 FEET | 120 | 1 | 120.0 | 85% | | 150.0 | 16.0 | 12 | 1 | 10 | 1 | 12 | 10 | Y | Y | C | 2.5 | 2.11% | N | | 117.5 | 2.11% |
| 200 FEET | 120 | 1 | 120.0 | 85% | | 200.0 | 16.0 | 12 | 1 | 8 | 1 | 12 | 8 | Y | Y | C | 2.2 | 1.86% | N | | 117.8 | 1.86% |
| 250 FEET | 120 | 1 | 120.0 | 85% | | 250.0 | 16.0 | 12 | 1 | 8 | 1 | 12 | 8 | Y | Y | C | 2.8 | 2.32% | N | | 117.2 | 2.32% |
| 300 FEET | 120 | 1 | 120.0 | 85% | | 300.0 | 16.0 | 12 | 1 | 6 | 1 | 12 | 6 | Y | Y | C | 2.2 | 1.80% | N | | 117.8 | 1.80% |
| 350 FEET | 120 | 1 | 120.0 | 85% | | 350.0 | 16.0 | 12 | 1 | 6 | 1 | 12 | 6 | Y | Y | C | 2.5 | 2.10% | N | | 117.5 | 2.10% |
| 400 FEET | 120 | 1 | 120.0 | 85% | | 400.0 | 16.0 | 12 | 1 | 4 | 1 | 12 | 4 | Y | Y | C | 1.9 | 1.57% | N | | 118.1 | 1.57% |
| 450 FEET | 120 | 1 | 120.0 | 85% | | 450.0 | 16.0 | 12 | 1 | 4 | 1 | 12 | 4 | Y | Y | C | 2.1 | 1.77% | N | | 117.9 | 1.77% |
| 500 FEET | 120 | 1 | 120.0 | 85% | | 500.0 | 16.0 | 12 | 1 | 4 | 1 | 12 | 4 | Y | Y | C | 2.4 | 1.97% | N | | 117.6 | 1.97% |
| | | | | | | | | | | | | | | | | | | | | | | |
| 50 FEET | 208 | 1 | 208.0 | 85% | | 50.0 | 16.0 | 12 | 1 | 12 | 1 | 12 | 12 | Y | Y | C | 1.4 | 0.67% | N | | 206.6 | 0.67% |
| 100 FEET | 208 | 1 | 208.0 | 85% | | 100.0 | 16.0 | 12 | 1 | 12 | 1 | 12 | 12 | Y | Y | C | 2.8 | 1.34% | N | | 205.2 | 1.34% |
| 150 FEET | 208 | 1 | 208.0 | 85% | | 150.0 | 16.0 | 12 | 1 | 12 | 1 | 12 | 12 | Y | Y | C | 4.2 | 2.00% | N | | 203.8 | 2.00% |
| 200 FEET | 208 | 1 | 208.0 | 85% | | 200.0 | 16.0 | 12 | 1 | 10 | 1 | 12 | 10 | Y | Y | C | 3.4 | 1.62% | N | | 204.6 | 1.62% |
| 250 FEET | 208 | 1 | 208.0 | 85% | | 250.0 | 16.0 | 12 | 1 | 10 | 1 | 12 | 10 | Y | Y | C | 4.2 | 2.03% | N | | 203.8 | 2.03% |
| 300 FEET | 208 | 1 | 208.0 | 85% | | 300.0 | 16.0 | 12 | 1 | 8 | 1 | 12 | 8 | Y | Y | C | 3.3 | 1.61% | N | | 204.7 | 1.61% |
| 350 FEET | 208 | 1 | 208.0 | 85% | | 350.0 | 16.0 | 12 | 1 | 8 | 1 | 12 | 8 | Y | Y | C | 3.9 | 1.88% | N | | 204.1 | 1.88% |
| 400 FEET | 208 | 1 | 208.0 | 85% | | 400.0 | 16.0 | 12 | 1 | 8 | 1 | 12 | 8 | Y | Y | C | 4.5 | 2.15% | N | | 203.5 | 2.15% |
| 450 FEET | 208 | 1 | 208.0 | 85% | | 450.0 | 16.0 | 12 | 1 | 6 | 1 | 12 | 6 | Y | Y | C | 3.2 | 1.56% | N | | 204.8 | 1.56% |
| 500 FEET | 208 | 1 | 208.0 | 85% | | 500.0 | 16.0 | 12 | 1 | 6 | 1 | 12 | 6 | Y | Y | C | 3.6 | 1.73% | N | | 204.4 | 1.73% |
| | | | | | | | | | | | | | | | | | | | | | | |
| 50 FEET | 277 | 1 | 277.0 | 85% | | 50.0 | 16.0 | 12 | 1 | 12 | 1 | 12 | 12 | Y | Y | C | 1.4 | 0.50% | N | | 275.6 | 0.50% |
| 100 FEET | 277 | 1 | 277.0 | 85% | | 100.0 | 16.0 | 12 | 1 | 12 | 1 | 12 | 12 | Y | Y | C | 2.8 | 1.00% | N | | 274.2 | 1.00% |
| 150 FEET | 277 | 1 | 277.0 | 85% | | 150.0 | 16.0 | 12 | 1 | 12 | 1 | 12 | 12 | Y | Y | C | 4.2 | 1.50% | N | | 272.8 | 1.50% |
| 200 FEET | 277 | 1 | 277.0 | 85% | | 200.0 | 16.0 | 12 | 1 | 12 | 1 | 12 | 12 | Y | Y | C | 5.6 | 2.01% | N | | 271.4 | 2.01% |
| 250 FEET | 277 | 1 | 277.0 | 85% | | 250.0 | 16.0 | 12 | 1 | 10 | 1 | 12 | 10 | Y | Y | C | 4.2 | 1.52% | N | | 272.8 | 1.52% |
| 300 FEET | 277 | 1 | 277.0 | 85% | | 300.0 | 16.0 | 12 | 1 | 10 | 1 | 12 | 10 | Y | Y | C | 5.1 | 1.83% | N | | 271.9 | 1.83% |
| 350 FEET | 277 | 1 | 277.0 | 85% | | 350.0 | 16.0 | 12 | 1 | 10 | 1 | 12 | 10 | Y | Y | C | 5.9 | 2.13% | N | | 271.1 | 2.13% |
| 400 FEET | 277 | 1 | 277.0 | 85% | | 400.0 | 16.0 | 12 | 1 | 8 | 1 | 12 | 8 | Y | Y | C | 4.5 | 1.61% | N | | 272.5 | 1.61% |
| 450 FEET | 277 | 1 | 277.0 | 85% | | 450.0 | 16.0 | 12 | 1 | 8 | 1 | 12 | 8 | Y | Y | C | 5.0 | 1.81% | N | | 272.0 | 1.81% |
| 500 FEET | 277 | 1 | 277.0 | 85% | | 500.0 | 16.0 | 12 | 1 | 8 | 1 | 12 | 8 | Y | Y | C | 5.6 | 2.01% | N | | 271.4 | 2.01% |
| | | | | | | | | | | | | | | | | | | | | | | |
| 50 FEET | 480 | 1 | 480.0 | 85% | | 50.0 | 16.0 | 12 | 1 | 12 | 1 | 12 | 12 | Y | Y | C | 1.4 | 0.29% | N | | 478.6 | 0.29% |
| 100 FEET | 480 | 1 | 480.0 | 85% | | 100.0 | 16.0 | 12 | 1 | 12 | 1 | 12 | 12 | Y | Y | C | 2.8 | 0.58% | N | | 477.2 | 0.58% |
| 150 FEET | 480 | 1 | 480.0 | 85% | | 150.0 | 16.0 | 12 | 1 | 12 | 1 | 12 | 12 | Y | Y | C | 4.2 | 0.87% | N | | 475.8 | 0.87% |
| 200 FEET | 480 | 1 | 480.0 | 85% | | 200.0 | 16.0 | 12 | 1 | 12 | 1 | 12 | 12 | Y | Y | C | 5.6 | 1.16% | N | | 474.4 | 1.16% |
| 250 FEET | 480 | 1 | 480.0 | 85% | | 250.0 | 16.0 | 12 | 1 | 10 | 1 | 12 | 10 | Y | Y | C | 4.2 | 0.88% | N | | 475.8 | 0.88% |
| 300 FEET | 480 | 1 | 480.0 | 85% | | 300.0 | 16.0 | 12 | 1 | 10 | 1 | 12 | 10 | Y | Y | C | 5.1 | 1.05% | N | | 474.9 | 1.05% |
| 350 FEET | 480 | 1 | 480.0 | 85% | | 350.0 | 16.0 | 12 | 1 | 10 | 1 | 12 | 10 | Y | Y | C | 5.9 | 1.23% | N | | 474.1 | 1.23% |
| 400 FEET | 480 | 1 | 480.0 | 85% | | 400.0 | 16.0 | 12 | 1 | 8 | 1 | 12 | 8 | Y | Y | C | 4.5 | 0.93% | N | | 475.5 | 0.93% |
| 450 FEET | 480 | 1 | 480.0 | 85% | | 450.0 | 16.0 | 12 | 1 | 8 | 1 | 12 | 8 | Y | Y | C | 5.0 | 1.05% | N | | 475.0 | 1.05% |
| 500 FEET | 480 | 1 | 480.0 | 85% | | 500.0 | 16.0 | 12 | 1 | 8 | 1 | 12 | 8 | Y | Y | C | 5.6 | 1.16% | N | | 474.4 | 1.16% |

2 / E5.01 VOLTAGE DROP CALCULATION SCHEDULE

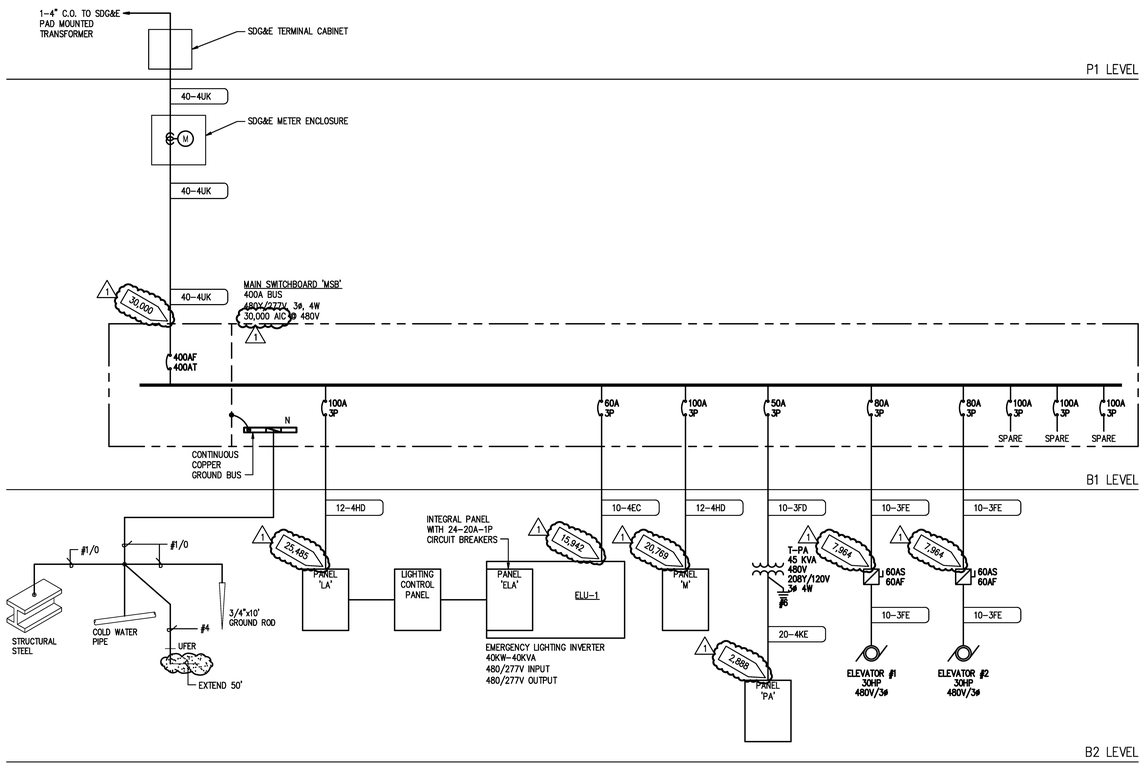


### FEEDER KEY SCHEDULE

RACEWAY KEY: 5=1/2" 15=1.5" 35=3.5" 7=3/4" 20=2" 40=4" 10=1" 25=2.5" 50=5" 12=1.25" 30=3" 60=6" (#)= PARALLELED QUANTITY

CONDUCTOR KEY (AWG OR KCMIL): A=14 F=4 L=2/0 R=350 X=750; B=12 G=3 M=3/0 T=400; C=10 H=2 N=4/0 U=500; D=8 J=1 P=250 V=600; E=6 K=1/0 Q=300 W=700

| KEY EXAMPLE | RACEWAY QUANTITY | RACEWAY SIZE | PHASE QUANTITY | PHASE SIZE | NEUTRAL QUANTITY | NEUTRAL SIZE | GROUND SIZE |
|---|---|---|---|---|---|---|---|
| 5-2C | 1 | 1/2 | 2 | 10 | | | |
| 12-3FE | 1 | 1-1/4 | 3 | 4 | | | 6 |
| 20-4ME | 1 | 2 | 3 | 3/0 | 1 | 3/0 | 6 |
| 20-4M | 1 | 2 | 3 | 3/0 | 1 | 3/0 | |
| 15-3HLD | 1 | 1-1/2 | 3 | 2 | 1 | 2/0 | 8 |
| 25-3RL* | 1 | 2-1/2 | 3 | 350 | 1 | 2/0 | |
| 30-5PF | 1 | 3 | 3 | 250 | 2 | 250 | 4 |
| 20-3J2KE | 1 | 4 | 3 | 1 | 2 | 1/0 | 6 |
| (4) 35-4VN | 4 | 3-1/2 | 3 | 600 | 1 | 600 | 4/0 |
| 40 | 1 | 4 | (RACEWAY ONLY) | | | | |

NOTES
1 WHEREVER A KEY HAS TWO OR MORE LETTERS THE LAST LETTER IS A GROUND CONDUCTOR UNLESS IT IS FOLLOWED BY THE SYMBOL "/" IN WHICH CASE IT IS A NEUTRAL CONDUCTOR
2 RACEWAY SIZES ARE BASED ON THW COPPER WIRE, UTILIZE RACEWAY AND WIRE MATERIAL PER PROJECT SPECIFICATIONS

### FEEDER LEGEND

(#) # - # A B

- GROUND CONDUCTOR SIZE
- PHASE AND NEUTRAL CONDUCTOR SIZE
- PHASE AND NEUTRAL QUANTITY
- CONDUIT SIZE
- CONDUIT QUANTITY

### SHORT CIRCUIT CALCULATION

1

Engineer: GRM — V3.07
Project: Cedar and Kettner Parking Structure - B18139 — Date: 24-Feb-14 14:44:28 — SYSTEM VOLTAGE: 480 PHASE 3
SHORT CIRCUIT CALCULATION PERFORMED PER BUSSMANN "ELECTRICAL PROTECTION HANDBOOK", 2008; LENGTHS SHOWN ARE FOR CALCULATION PURPOSES ONLY, NOT FOR BIDDING.

| PANEL OR FAULT LOCATON | CONTINUED Y/N | FROM | CALC L-L/L-N | XFMR (Y/N) | ISC AT START | TRANSFORMER PROPERTIES KVA | PRI VOLT | SEC VOLT | IMPED % | WIRE MATERIALS SIZE | QTY/PH | WIRE | CONDUIT | CABLE | VOLTS | PHASE | LENGTH | MOTOR FLA | MIN. Isc. RATING |
|---|---|---|---|---|---|---|---|---|---|---|---|---|---|---|---|---|---|---|---|
| MSB | N | | L-L | N | 30,000A | -- | -- | -- | -- | 500 | 1 | CU | M | N | 480 | 3 | 20.00 | 203A | 30,000A |
| LA | Y | MSB | L-L | N | 30,000A | -- | -- | -- | -- | 2 | 1 | CU | M | N | 480 | 3 | 10.00 | 33A | 25,485A |
| ELU-1/ELA | Y | MSB | L-L | N | 30,000A | -- | -- | -- | -- | 6 | 1 | CU | M | N | 480 | 3 | 20.00 | 23A | 15,942A |
| M | Y | MSB | L-L | N | 30,000A | -- | -- | -- | -- | 2 | 1 | CU | M | N | 480 | 3 | 25.00 | 49A | 20,769A |
| PA | Y | MSB | L-L | Y | 30,000A | 45.0 | 480 | 208 | 4.50 | 4 | 1 | CU | M | N | -- | 3 | 30.00 | 54A | 2,888A |
| ELEVATOR #1 | Y | MSB | L-L | N | 30,000A | -- | -- | -- | -- | 4 | 1 | CU | M | N | 480 | 3 | 100.00 | 40A | 7,964A |
| ELEVATOR #2 | Y | MSB | L-L | N | 30,000A | -- | -- | -- | -- | 4 | 1 | CU | M | N | 480 | 3 | 100.00 | 40A | 7,964A |
| | | | | | | | | | | | | -- | | | -- | | | | |

1 / E5.01 SINGLE LINE DIAGRAM

**County of San Diego Cedar & Kettner Development Project**
San Diego, California

McCARTHY
20401 S.W. BIRCH STREET SUITE 300
Newport Beach, California 92660

Architect
IPD — Alameda, Irvine, Los Angeles
Architecture / Engineering / Consulting
www.ipd-global.com
2 Faraday, Suite 101, Irvine CA 92618
Phone 949 595 8004 Fax 949 595 8011

SPARLING
WORK TOGETHER | STAND APART™
9191 Towne Centre Drive, Suite 220
San Diego, California 92122
858-622-2700 800-667-0610
www.sparling.com

REGISTERED PROFESSIONAL ENGINEER — PAUL K. ERICSON — No 11219 — exp.06/30/2015 — STATE OF CALIFORNIA

| Revision | Date |
|---|---|
| 100% DESIGN DEVELOPMENT | 10/23/2013 |
| 90% CDs - 1ST PLAN CHECK | 12/24/2013 |
| 2ND PLAN CHECK | 04/23/14 |

| | |
|---|---|
| Date | |
| IPD Job No. | 13-813 |
| Drawn By | SPARLING |
| Checked By | LGR/PKE |
| Scale | AS NOTED |

CONSTRUCTION DOCUMENTS

Drawing Title
SINGLE LINE DIAGRAM AND VOLTAGE DROP SCHEDULE

Drawing No.
**E5.01**

T:\B18139\CAD-BIM\E501 Apr 22, 2014 9:33 AM By:EALVAREZ
IPD, Inc.

## Panel MSB

Sparling, Inc.
Name: **MSB** — 277/480V — 3Ø — 4W — 400A Main CB — Swbd
Location: Electrical Room — Surface Mounted — Type: Switchboard
Serves: Parking Structure — Single Lugs — 30,000 AIC — Deep

| # | Description | Load | Overcurrent device Size | * Type | Remarks |
|---|---|---|---|---|---|
| 1 | Elevator #1 | 33.25 KVA | 80A/3P | | |
| 2 | Panel LA | 46.14 KVA | 100A/3P | | |
| 3 | Panel ELA | 15.44 KVA | 100A/3P | | |
| 4 | Panel PA | 19.79 KVA | 100A/3P | | |
| 5 | Elevator #2 | 33.25 KVA | 80A/3P | | |
| 6 | Panel M | 46.41 KVA | 100A/3P | | |
| 7 | Spare | 0.00 KVA | 100A/3P | | |
| 8 | Spare | 0.00 KVA | 100A/3P | | |
| 9 | Spare | 0.00 KVA | 100A/3P | | |

Rev:
Revised circuits marked ‡ Existing circuits marked †
Project #: B18139
File: T:\B18139\Design\Sched\WinPanel\B18139-Cedar&Kettner Parking.PNL

* Circuit Breaker Code
CB = Circuit Breaker; S = Shunt Trip; G = GFCI; M = Motor Ckt Prot.; H= HID Rated; F = Fused Switch; C = HACR Rated; # = see note

Notes:

| Load Type | Conn KVA | NEC Demand Factor | Demand KVA | Demand Amps | NEC Feeder Factors | NEC Feed Amps |
|---|---|---|---|---|---|---|
| Elevator | 66.50 | Up to 72%, per 620-14 | 63.18 | 76 | x 100% | 76 |
| Equip | 24.76 | x 100% | 24.76 | 30 | x 100% | 30 |
| Lighting | 37.23 | x 100% | 37.23 | 45 | x 125% | 56 |
| Mech | 53.36 | x 100% | 53.36 | 64 | 125% of Largest | 66 |
| Misc | 0.48 | x 100% | 0.48 | 1 | x 100% | 1 |
| Recept | 11.96 | 10 KVA @ 100%, rest @ 50% | 10.98 | 13 | x 100% | 13 |
| | 194.29 | 234 Amps | 189.99 | 229 | | 241 |

## Panel ELA

Sparling
Name: **ELA** — 277/480V — 3Ø — 4W — 100A Main lugs only — Panel
Location: Electrical Room — Surface Mounted — Type: Panelboard — 22,000 AIC
Serves: Emergency Lighting — Single Lugs — 6" Deep

| # | Description | Load | CB * | | A | B | C | CB * | | Load | Description | # |
|---|---|---|---|---|---|---|---|---|---|---|---|---|
| 1 | Lighting - B3 Level - Parking Area | 1.43 | 20/1 | CB | • | | | 20/1 | CB | 0.93 | Lighting - P7 Level - Parking Area | 2 |
| 3 | Lighting - B2 Level - Parking Area | 1.43 | 20/1 | CB | | • | | 20/1 | CB | 1.36 | Lighting - P3 Level - Parking Area | 4 |
| 5 | Lighting - B1 Level - Parking Area | 1.43 | 20/1 | CB | | | • | 20/1 | CB | 1.36 | Lighting - P4 Level - Parking Area | 6 |
| 7 | Lighting - Stairs - B3, B2, B1 & P1 Levels | 0.99 | 20/1 | CB | • | | | 20/1 | CB | 1.36 | Lighting - P5 Level - Parking Area | 8 |
| 9 | Lighting - Exit Signs - All Levels | 0.18 | 20/1 | CB | | • | | 20/1 | CB | 1.36 | Lighting - P6 Level - Parking Area | 10 |
| 11 | Lighting - P1 - Building Exterior & P2- P7 Stairs | 0.88 | 20/1 | CB | | | • | 20/1 | | 0.00 | Spare | 12 |
| 13 | Lighting - P2 Level - Parking Area | 1.36 | 20/1 | CB | • | | | 20/1 | | 0.00 | Spare | 14 |
| 15 | Lighting - P1 Level - Parking Area | 1.36 | 20/1 | CB | | • | | 20/1 | | 0.00 | Spare | 16 |

Rev:
Revised circuits marked ‡ Existing circuits marked †
Project #: B18139
File: T:\B18139\Design\Sched\WinPanel\B18139-Cedar&Kettner Parking.PNL

| | ØA | ØB | ØC |
|---|---|---|---|
| Connected KVA | 6.08 | 5.70 | 3.67 |

* Circuit Breaker Code
G = GFCI; H= HID Rated; S = Shunt Trip; C = HACR Rated; D= Switching Duty; # = see note; A = AFCI

Notes:

| Load Type | Conn KVA | NEC Demand Factor | Demand KVA | Demand Amps | NEC Feeder Factors | NEC Feed Amps |
|---|---|---|---|---|---|---|
| Lighting | 15.44 | x 100% | 15.44 | 19 | x 125% | 23 |
| | 15.44 | 19 Amps | 15.44 | 19 | | 23 |

## Panel LA

Sparling
Name: **LA** — 277/480V — 3Ø — 4W — 100A Main lugs only — Panel
Location: Electrical Room — Surface Mounted — Type: Panelboard — 30,000 AIC
Serves: Lighting — Single Lugs — 6" Deep

| # | Description | Load | CB * | | A | B | C | CB * | | Load | Description | # |
|---|---|---|---|---|---|---|---|---|---|---|---|---|
| 1 | Lighting - B3 Level - Utility Rooms | 0.93 | 20/1 | CB | • | | | 20/1 | CB | 2.40 | Lighting - Building Sign | 2 |
| 3 | Lighting - B3 Level - Parking Area | 1.55 | 20/1 | CB | | • | | 20/1 | CB | 2.40 | Lighting - Building Sign | 4 |
| 5 | Lighting - B2 Level - Utility Rooms | 0.93 | 20/1 | CB | | | • | 20/3 | CB | 2.03 | Equip P1 - ROLL UP DOOR/GATE | 6 |
| 7 | Lighting - B2 Level - Parking Area | 1.55 | 20/1 | CB | • | | | ------- | --- | 2.03 | -------P1 - ROLL UP DOOR/GATE | 8 |
| 9 | Lighting - B1 Level - Utility Rooms | 0.81 | 20/1 | CB | | • | | ------- | --- | 2.03 | -------P1 - ROLL UP DOOR/GATE | 10 |
| 11 | Lighting - B1 Level - Parking Area | 1.55 | 20/1 | CB | | | • | 20/3 | CB | 2.03 | Equip P1 - ROLL UP DOOR/GATE | 12 |
| 13 | Lighting - P1 Level - Parking Area | 1.92 | 20/1 | CB | • | | | ------- | --- | 2.03 | -------P1 - ROLL UP DOOR/GATE | 14 |
| 15 | Lighting - P1 Level - Office, Storage, Restroom | 0.31 | 20/1 | CB | | • | | ------- | --- | 2.03 | -------P1 - ROLL UP DOOR/GATE | 16 |
| 17 | Lighting - P2 Level - Parking Area | 1.18 | 20/1 | CB | | | • | 20/3 | CB | 2.03 | Equip P1 - ROLL UP DOOR/GATE | 18 |
| 19 | Lighting - P3 Level - Parking Area | 1.18 | 20/1 | CB | • | | | ------- | --- | 2.03 | -------P1 - ROLL UP DOOR/GATE | 20 |
| 21 | Lighting - P4 Level - Parking Area | 1.18 | 20/1 | CB | | • | | ------- | --- | 2.03 | -------P1 - ROLL UP DOOR/GATE | 22 |
| 23 | Lighting - P5 Level - Parking Area | 1.18 | 20/1 | CB | | | • | 20/3 | CB | 2.03 | Equip P1 - ROLL UP DOOR/GATE | 24 |
| 25 | Lighting - P6 Level - Parking Area | 1.18 | 20/1 | CB | • | | | ------- | --- | 2.03 | -------P1 - ROLL UP DOOR/GATE | 26 |
| 27 | Lighting - P7 Level - Parking Area | 1.21 | 20/1 | CB | | • | | ------- | --- | 2.03 | -------P1 - ROLL UP DOOR/GATE | 28 |
| 29 | Lighting - Site | 0.33 | 20/1 | CB | | | • | 0/1 | | 0.00 | Space | 30 |
| 31 | Spare | 0.00 | 20/1 | CB | • | | | 0/1 | | 0.00 | Space | 32 |
| 33 | Spare | 0.00 | 20/1 | CB | | • | | 0/1 | | 0.00 | Space | 34 |
| 35 | Spare | 0.00 | 20/1 | CB | | | • | 0/1 | | 0.00 | Space | 36 |
| 37 | Spare | 0.00 | 20/1 | CB | • | | | 0/1 | | 0.00 | Space | 38 |
| 39 | Spare | 0.00 | 20/1 | CB | | • | | 0/1 | | 0.00 | Space | 40 |
| 41 | Spare | 0.00 | 20/1 | CB | | | • | 0/1 | | 0.00 | Space | 42 |

Rev:
Revised circuits marked ‡ Existing circuits marked †
Project #: B18139
File: T:\B18139\Design\Sched\WinPanel\B18139-Cedar&Kettner Parking.PNL

| | ØA | ØB | ØC |
|---|---|---|---|
| Connected KVA | 17.28 | 15.58 | 13.29 |

* Circuit Breaker Code
G = GFCI; H= HID Rated; S = Shunt Trip; C = HACR Rated; D= Switching Duty; # = see note; A = AFCI

Notes:

| Load Type | Conn KVA | NEC Demand Factor | Demand KVA | Demand Amps | NEC Feeder Factors | NEC Feed Amps |
|---|---|---|---|---|---|---|
| Lighting | 21.78 | x 100% | 21.78 | 26 | x 125% | 33 |
| Equip | 24.36 | x 100% | 24.36 | 29 | x 100% | 29 |
| | 46.14 | 56 Amps | 46.14 | 56 | | 62 |

## Panel M

Sparling
Name: **M** — 277/480V — 3Ø — 4W — 100A Main lugs only — Panel
Location: Electrical Room — Surface Mounted — Type: Panelboard — 30,000 AIC
Serves: Mechanical Equipment — Single Lugs — 6" Deep

| # | Description | Load | CB * | | A | B | C | CB * | | Load | Description | # |
|---|---|---|---|---|---|---|---|---|---|---|---|---|
| 1 | Mech - EF-B3-6 3HP | 1.27 | 15/3 | CB | • | | | 15/3 | CB | 1.27 | Mech - EF-B2-5 3HP | 2 |
| 3 | -------- EF-B3-6 3HP | 1.27 | ------- | --- | | • | | ------- | --- | 1.27 | -------- EF-B2-5 3HP | 4 |
| 5 | -------- EF-B3-6 3HP | 1.27 | ------- | --- | | | • | ------- | --- | 1.27 | -------- EF-B2-5 3HP | 6 |
| 7 | Mech - SF-B3-3 3HP | 1.27 | 15/3 | CB | • | | | 15/3 | CB | 1.27 | Mech - SF-B2-2 3HP | 8 |
| 9 | -------- SF-B3-3 3HP | 1.27 | ------- | --- | | • | | ------- | --- | 1.27 | -------- SF-B2-2 3HP | 10 |
| 11 | -------- SF-B3-3 3HP | 1.27 | ------- | --- | | | • | ------- | --- | 1.27 | -------- SF-B2-2 3HP | 12 |
| 13 | Mech - EF-B3-6 3HP | 1.27 | 15/3 | CB | • | | | 15/3 | CB | 1.27 | Mech - EF-B1-1 3HP | 14 |
| 15 | -------- EF-B3-6 3HP | 1.27 | ------- | --- | | • | | ------- | --- | 1.27 | -------- EF-B1-1 3HP | 16 |
| 17 | -------- EF-B3-6 3HP | 1.27 | ------- | --- | | | • | ------- | --- | 1.27 | -------- EF-B1-1 3HP | 18 |
| 19 | Mech - SF-B3-4 3HP | 1.27 | 15/3 | CB | • | | | 15/3 | CB | 1.27 | Mech - EF-B1-2 3HP | 20 |
| 21 | -------- SF-B3-4 3HP | 1.27 | ------- | --- | | • | | ------- | --- | 1.27 | -------- EF-B1-2 3HP | 22 |
| 23 | -------- SF-B3-4 3HP | 1.27 | ------- | --- | | | • | ------- | --- | 1.27 | -------- EF-B1-2 3HP | 24 |
| 25 | Mech - EF-B2-4 3HP | 1.27 | 15/3 | CB | • | | | 15/3 | CB | 0.50 | Mech - SE-B3-1 | 26 |
| 27 | -------- EF-B2-4 3HP | 1.27 | ------- | --- | | • | | ------- | --- | 0.50 | -------- SE-B3-1 | 28 |
| 29 | -------- EF-B2-4 3HP | 1.27 | ------- | --- | | | • | ------- | --- | 0.50 | -------- SE-B3-1 | 30 |
| 31 | Mech - SF-B2-1 3HP | 1.27 | 15/3 | CB | • | | | 20/1 | CB | 3.00 | Mech - IH-1 - P1 Level | 32 |
| 33 | -------- SF-B2-1 3HP | 1.27 | ------- | --- | | • | | 15/3 | CB | 1.27 | Mech EF-B1-3 3HP | 34 |
| 35 | -------- SF-B2-1 3HP | 1.27 | ------- | --- | | | • | ------- | --- | 1.27 | -------EF-B1-3 3HP | 36 |
| 37 | Spare | 0.00 | 20/1 | CB | • | | | ------- | --- | 1.27 | -------EF-B1-3 3HP | 38 |
| 39 | Spare | 0.00 | 20/1 | CB | | • | | 20/1 | CB | 0.00 | Spare | 40 |
| 41 | Spare | 0.00 | 20/1 | CB | | | • | 20/1 | CB | 0.00 | Spare | 42 |

Rev:
Revised circuits marked ‡ Existing circuits marked †
Project #: B18139
File: T:\B18139\Design\Sched\WinPanel\B18139-Cedar&Kettner Parking.PNL

| | ØA | ØB | ØC |
|---|---|---|---|
| Connected KVA | 17.47 | 14.47 | 14.47 |

* Circuit Breaker Code
G = GFCI; H= HID Rated; S = Shunt Trip; C = HACR Rated; D= Switching Duty; # = see note; A = AFCI

Notes:

| Load Type | Conn KVA | NEC Demand Factor | Demand KVA | Demand Amps | NEC Feeder Factors | NEC Feed Amps |
|---|---|---|---|---|---|---|
| Mech | 46.41 | x 100% | 46.41 | 56 | 125% of Largest | 57 |
| | 46.41 | 56 Amps | 46.41 | 56 | | 57 |

## Panel PA

Sparling
Name: **PA** — 120/208V — 3Ø — 4W — 100A Main lugs only — Panel
Location: Electrical Room — Surface Mounted — Type: Panelboard — 10,000 AIC
Serves: Power Receptacles & Mech. Equip. — Single Lugs — 6" Deep

| # | Description | Load | CB * | | A | B | C | CB * | | Load | Description | # |
|---|---|---|---|---|---|---|---|---|---|---|---|---|
| 1 | Recept Convenience Levels B3,B2,B1,P1,P2 | 0.90 | 20/1 | CB | • | | | 20/1 | CB | 0.72 | Recept B3 Level - Utility Rooms | 2 |
| 3 | Recept - Convenience Levels P3,P4,P5,P6,P7 | 0.90 | 20/1 | CB | | • | | 20/1 | CB | 0.72 | Recept B2 Level - Utility Rooms | 4 |
| 5 | Recept Convenience Levels B3,B2,B1,P1,P2 | 0.90 | 20/1 | CB | | | • | 20/1 | CB | 0.72 | Recept B1 Level - Utility Rooms | 6 |
| 7 | Recept Convenience Levels P3,P4,P5,P6,P7 | 0.90 | 20/1 | CB | • | | | 20/1 | CB | 0.20 | Mech B3 Level - Controls | 8 |
| 9 | Recept Convenience Levels B3,B2,B1,P1,P2 | 0.90 | 20/1 | CB | | • | | 20/1 | CB | 0.20 | Mech B2 Level - Controls | 10 |
| 11 | Recept Convenience Levels P3,P4,P5,P6,P7 | 0.90 | 20/1 | CB | | | • | 20/1 | CB | 0.20 | Mech B1 Level - Controls | 12 |
| 13 | Mech EF-B2-9 1/6HP | 0.50 | 15/1 | CB | • | | | 20/1 | CB | 0.00 | Spare | 14 |
| 15 | Recept Dedicated - P6 Level - Elev. Cont. Rm. | 0.18 | 20/1 | CB | | • | | 15/1 | CB | 0.20 | Equip B1 Level - Irrigation Controller | 16 |
| 17 | Mech EF-P6-8 1/6HP | 0.50 | 15/1 | CB | | | • | 15/1 | CB | 0.50 | Mech EF-P1-7 1/6HP | 18 |
| 19 | Spare | 0.00 | 20/1 | CB | • | | | 30/2 | CB | 2.42 | Mech HP-P1-1 1HP | 20 |
| 21 | Spare | 0.00 | 20/1 | CB | | • | | ------- | --- | 2.42 | -------HP-P1-1 1HP | 22 |
| 23 | Spare | 0.00 | 20/1 | CB | | | • | 20/1 | CB | 0.48 | Misc Elevator Pit | 24 |
| 25 | Spare | 0.00 | 20/1 | CB | • | | | 20/1 | CB | 0.50 | Recept Dedicated - P1 Level - Office | 26 |
| 27 | Spare | 0.00 | 20/1 | CB | | • | | 20/1 | CB | 0.50 | Recept Dedicated - P1 Level - Office | 28 |
| 29 | Spare | 0.00 | 20/1 | CB | | | • | 20/1 | CB | 0.50 | Recept Dedicated - P1 Level - Office | 30 |
| 31 | Space | 0.00 | 0/1 | | • | | | 20/1 | CB | 0.50 | Recept Dedicated - B1 Level - MDF Room | 32 |
| 33 | Space | 0.00 | 0/1 | | | • | | 20/1 | CB | 0.50 | Recept Dedicated - B1 Level - MDF Room | 34 |
| 35 | Space | 0.00 | 0/1 | | | | • | 20/1 | CB | 0.50 | Recept Dedicated - B1 Level - MDF Room | 36 |
| 37 | Space | 0.00 | 0/1 | | • | | | 20/1 | CB | 0.50 | Recept Dedicated - B1 Level - MDF Room | 38 |
| 39 | Space | 0.00 | 0/1 | | | • | | 20/1 | CB | 0.72 | Recept B1 Level - MDF Room | 40 |
| 41 | Space | 0.00 | 0/1 | | | | • | 20/1 | CB | 0.20 | Equip B1 Level - MDF Room - FACP | 42 |

Rev:
Revised circuits marked ‡ Existing circuits marked †
Project #: B18139
File: T:\B18139\Design\Sched\WinPanel\B18139-Cedar&Kettner Parking.PNL

| | ØA | ØB | ØC |
|---|---|---|---|
| Connected KVA | 7.14 | 7.24 | 5.40 |

* Circuit Breaker Code
G = GFCI; H= HID Rated; S = Shunt Trip; C = HACR Rated; D= Switching Duty; # = see note; A = AFCI

Notes:

| Load Type | Conn KVA | NEC Demand Factor | Demand KVA | Demand Amps | NEC Feeder Factors | NEC Feed Amps |
|---|---|---|---|---|---|---|
| Recept | 11.96 | 10 KVA @ 100%, rest @ 50% | 10.98 | 30 | x 100% | 30 |
| Equip | 0.40 | x 100% | 0.40 | 1 | x 100% | 1 |
| Misc | 0.48 | x 100% | 0.48 | 1 | x 100% | 1 |
| Mech | 6.95 | x 100% | 6.95 | 19 | 125% of Largest | 23 |
| | 19.79 | 55 Amps | 18.81 | 52 | | 56 |

| MSB | ELA | LA |
|---|---|---|
| M | PA | |

T:\B18139\CAD-BIM\E601 Apr 22, 2014 9:34 AM By:EALVAREZ
IPD, Inc.

**County of San Diego**
**Cedar & Kettner**
**Development Project**
San Diego, California


McCARTHY
20401 S.W. BIRCH STREET SUITE 300
Newport Beach, California 92660

Architect
IPD — Alameda, Irvine, Los Angeles
Architecture / Engineering / Consulting
www.ipd-global.com
2 Faraday, Suite 101, Irvine CA 92618
Phone 949 595 8004 Fax 949 595 8011

SPARLING
WORK TOGETHER | STAND APART™
9191 Towne Centre Drive, Suite 220
San Diego, California 92122
858-622-2700 800-667-0610
www.sparling.com

REGISTERED PROFESSIONAL ENGINEER — PAUL K. ERICSON — No. 11219 — exp.06/30/2015 — ELECTRICAL — STATE OF CALIFORNIA


| Revision | Date |
|---|---|
| 100% DESIGN DEVELOPMENT | 10/23/2013 |
| 90% CDs - 1ST PLAN CHECK | 12/24/2013 |
| 2ND PLAN CHECK | 04/23/14 |

| | |
|---|---|
| Date | |
| IPD Job No. | 13-813 |
| Drawn By | SPARLING |
| Checked By | LGR/PKE |
| Scale | AS NOTED |

CONSTRUCTION DOCUMENTS

Drawing Title
PANEL SCHEDULES

Drawing No.
**E6.01**

FLAG NOTE:

BOND GROUNDING BAR TO BUILDING ELECTRODE SYSTEM. IN ADDITION, PROVIDE 12'-0" LONG, #6AWG BARE COPPER GROUND CONDUCTOR CONNECTED TO GROUNDING BAR. FIELD VERIFY CONNECTION AND ROUTING REQUIREMENTS PRIOR TO BID AND ROUGH IN.

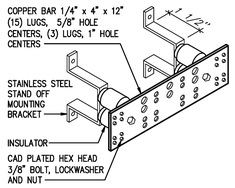


DETAIL NOTES:

1. PROVIDE COMPLETE WITH APPROPRIATE MOUNTING HARDWARE (BOLTS, NUTS, LOCKWASHERS, STAND OFF BRACKETS AND INSULATORS), MOUNTING HOLES, SLOTS AND LUGS.
2. ALL SPLICE SHALL BE EXOTHERMIC WELD.
3. ASSEMBLED GROUND BARS SHALL BE FABRICATED FROM STOCKLIST AND DETAIL DRAWINGS CONTAINED WITHIN THIS EXHIBIT.
4. BUSBAR CONNECTORS SHALL UTILIZE 2 HOLE COMPRESSION CONNECTORS.

## GROUNDING BUSS BAR DETAIL
SCALE: NOT TO SCALE

1 / E7.01

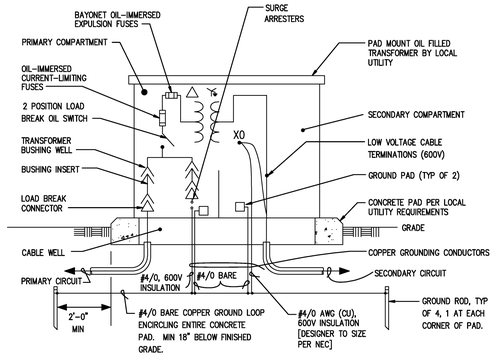


## PAD-MOUNTED TRANSFORMER DETAIL
SCALE: NOT TO SCALE

2 / E7.01

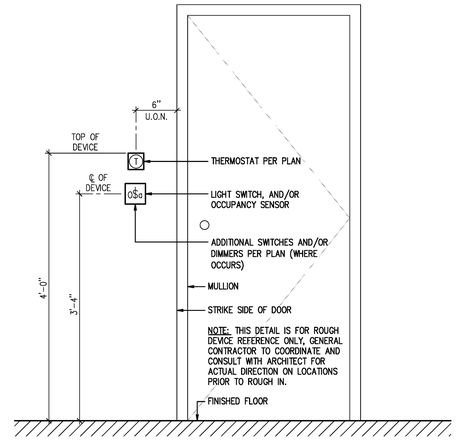


## TYPICAL OFFICE, CLERK, PRIVACY, STORAGE ROOMS ENTRANCE DOOR DETAIL
SCALE: NOT TO SCALE

3 / E7.01

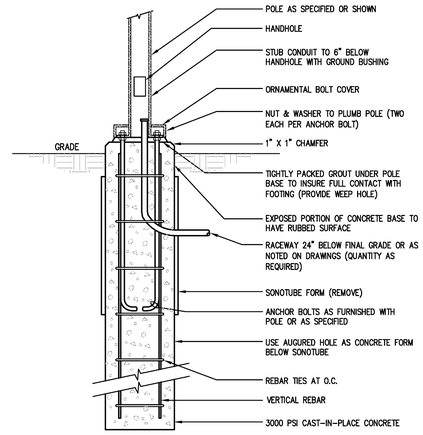


## POLE BASE DETAIL
SCALE: NOT TO SCALE

4 / E7.01

**County of San Diego**
**Cedar & Kettner**
**Development Project**
San Diego, California

McCARTHY

20401 S.W. BIRCH STREET SUITE 300
Newport Beach, California 92660


Architect

IPD
Alameda
Irvine
Los Angeles

Architecture / Engineering / Consulting
www.ipd-global.com

2 Faraday, Suite 101, Irvine CA 92618
Phone 949 595 8004 Fax 949 595 8011

SPARLING
WORK TOGETHER | STAND APART™
9191 Towne Centre Drive, Suite 220
San Diego, California 92122
858-622-2700 800-667-0610
www.sparling.com


PROFESSIONAL ENGINEER
PHIL K. ERICKSON
No. 11219
EXP. 06/30/2014
ELECTRICAL
STATE OF CALIFORNIA

| Revision | Date |
|---|---|
| 100% DESIGN DEVELOPMENT | 10/23/2013 |
| 90% CDs - 1ST PLAN CHECK | 12/24/2013 |
| 2ND PLAN CHECK | 04/23/14 |

| | |
|---|---|
| Date | |
| IPD Job No. | 13-813 |
| Drawn By | SPARLING |
| Checked By | LGR/PKE |
| Scale | AS NOTED |

CONSTRUCTION DOCUMENTS

Drawing Title
DETAILS

Drawing No.
**E7.01**


T:\JP813\9\CAD-BIM\E701 Apr 22, 2014 9:35 AM By:EALVAREZ
IPD, Inc.

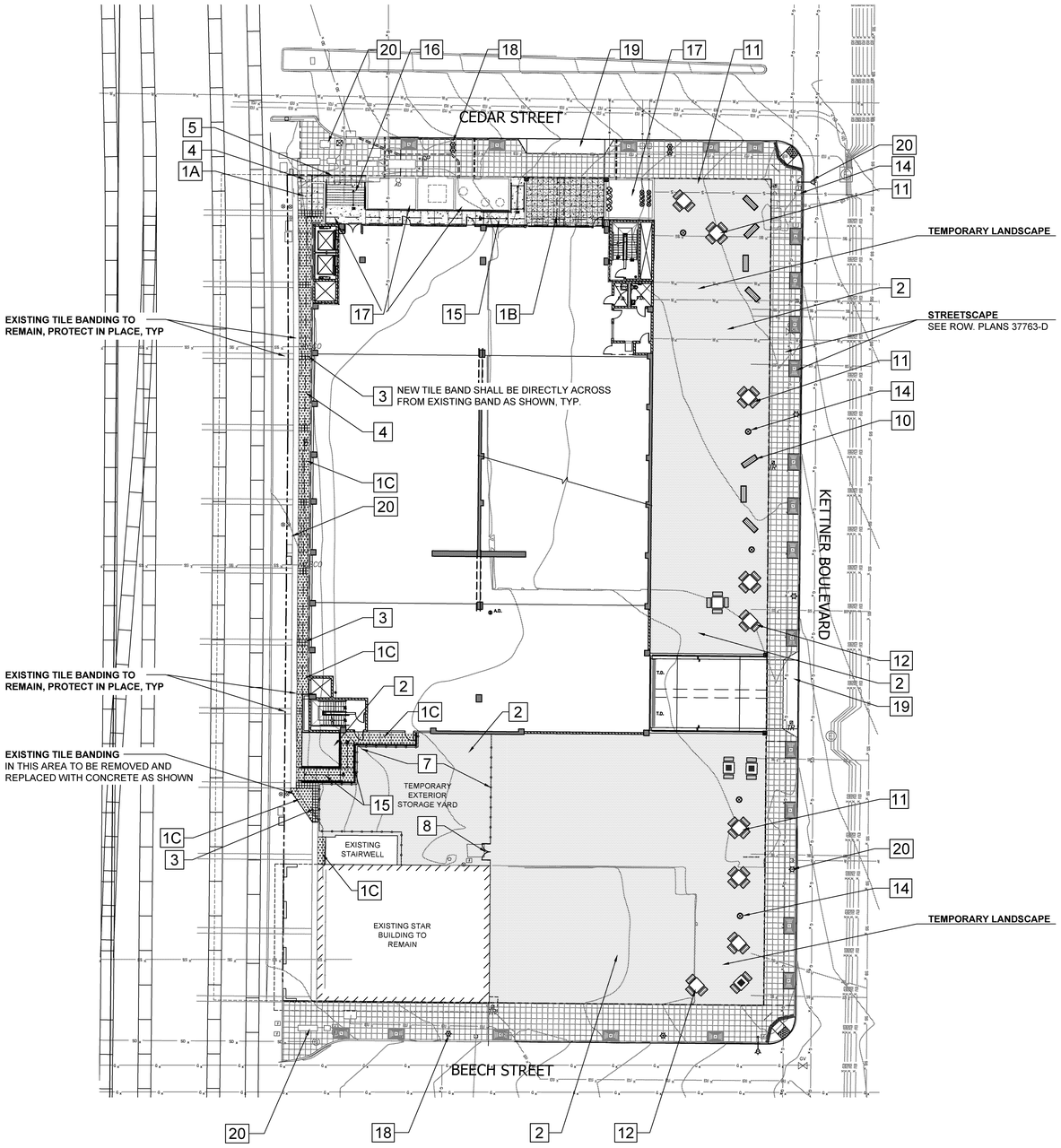


## CONSTRUCTION SCHEDULE

| SYMBOL | CALLOUT | DESCRIPTION | DETAIL |
|---|---|---|---|
| | 1A | INTEGRAL COLOR PEDESTRIAN CONCRETE PAVING (COLOR TO BE 'FRENCH GRAY' BY SCOFIELD) | 1,2 / LC-2.0 |
| | 1B | INTEGRAL COLOR VEHICULAR CONCRETE PAVING (COLOR TO BE 'FRENCH GRAY' BY SCOFIELD) | 1,2 / LC-2.0 |
| | 1C | INTEGRAL COLOR PEDESTRIAN CONCRETE PAVING (COLOR & TEXTURE TO MATCH EXISTING MTS PAVING) | 1,2 / LC-2.0 |
| | 2 | STABILIZED DECOMPOSED GRANITE PAVING (COLOR TO BE: 'SAN DIEGO GRAY' AVAILABLE FROM KRC ROCK) | 4 / LC-2.0 |
| | 3 | TILE BANDING (COLOR, STYLE, SIZE, AND BAND WIDTH TO MATCH EXISTING) CONTRACTOR TO SUBMIT SAMPLE FOR APPROVAL BY LANDSCAPE ARCHITECT PRIOR TO PURCHASE AND INSTALLATION) | 3 / LC-2.0 |
| | 4 | CONCRETE SCORELINE (JOINT PATTERN TO BE 2'x2' SQUARE TYP. PER CIVIC SAN DIEGO REQUIREMENTS - UNLESS OTHERWISE INDICATED, SEE PLAN) | 2 / LC-2.0 |
| | 5 | EXPANSION JOINT | 2 / LC-2.0 |
| | 6 | (NOT ASSIGNED) | |
| | 7 | 6' DECORATIVE CHAINLINK FENCE WITH 8" CONCRETE CURB BELOW | 6 / LC-2.0 |
| | 8 | 6' WIDE DOUBLE ENTRY GATE | 7 / LC-2.0 |
| | 9 | (NOT ASSIGNED) | |
| | 10 | 6' BENCH WITHOUT BACK TO BE SELECTED BY COUNTY REPRESENTATIVE SURFACE MOUNT PER MANUFACTURERS RECOMMENDATIONS AND AS DETAILED - LOCATE PER PLAN | 8 / LC-2.0 |
| | 11 | 48" SQ. 4 SEAT TABLE ENSEMBLE TO BE SELECTED BY COUNTY REPRESENTATIVE SURFACE MOUNT PER MANUFACTURERS RECOMMENDATIONS AND AS DETAILED - LOCATE PER PLAN | |
| | 12 | 48" SQ. (ADA) 3 SEAT TABLE ENSEMBLE TO BE SELECTED BY COUNTY REPRESENTATIVE SURFACE MOUNT PER MANUFACTURERS RECOMMENDATIONS AND AS DETAILED - LOCATE PER PLAN | |
| | 13 | 48" SQ. GAME TABLE ENSEMBLE TO BE SELECTED BY COUNTY REPRESENTATIVE PER MANUFACTURERS RECOMMENDATIONS AND AS DETAILED LOCATE PER PLAN | |
| | 14 | TRASH RECEPTACLE WITH RAIN COVER TO BE SELECTED BY COUNTY REPRESENTATIVE SURFACE MOUNT PER MANUFACTURERS RECOMMENDATIONS AND AS DETAILED - LOCATE PER PLAN | |
| | 15 | RAMPING WITH RAILING (SEE CIVIL + ARCHITECTURAL PLANS) (RAILING TO MATCH PROPOSED ARCHITECTURAL RAILING FOR SITE) | 9 / LC-2.0 & 1-11 / A7.01 |
| | 16 | STAIRS WITH RAILING (SEE CIVIL + ARCHITECTURAL PLANS) | |
| | 17 | RAISED PLANTER (SEE CIVIL, ARCHITECTURAL + PLANTING PLANS) | |
| | 18 | PROPOSED STREET LIGHTS (SEE CITY ROW PLANS) | |
| | 19 | DRIVEWAY APRON (SEE CIVIL PLANS) | |
| | 20 | EXISTING UTILITIES (PROTECT IN PLACE, SEE CIVIL PLANS) | |

## CONSTRUCTION NOTES

1. ALL LANDSCAPE AND IRRIGATION SHALL CONFORM TO THE STANDARDS OF THE COUNTY-WIDE LANDSCAPE REGULATIONS AND THE COUNTY OF SAN DIEGO LAND DEVELOPMENT MANUAL LANDSCAPE STANDARDS AND ALL OTHER LANDSCAPE RELATED COUNTY AND REGIONAL STANDARDS.
2. ALL GRADED, DISTURBED, AND OR ERODED AREAS THAT WILL NOT BE PERMANENTLY PAVED OR COVERED BY STRUCTURES SHALL BE PERMANENTLY RE-VEGETATED AND IRRIGATED AS SHOWN IN TABLE 142-04F AND IN ACCORDANCE WITH THE STANDARDS OF THE LAND DEVELOPMENT MANUAL [142.0411(a)].
5. MAINTENANCE: ALL REQUIRED LANDSCAPE AREAS SHALL BE MAINTAINED BY THE OWNER. LANDSCAPE AND IRRIGATION AREAS IN THE PUBLIC RIGHT-OF-WAY SHALL BE MAINTAINED BY THE OWNER. THE LANDSCAPE AREAS SHALL BE MAINTAINED FREE OF DEBRIS AND LITTER, AND ALL PLANT MATERIAL SHALL BE MAINTAINED IN A HEALTHY GROWING CONDITION. DISEASED OR DEAD PLANT MATERIAL SHALL BE SATISFACTORILY TREADED OR REPLACED PER THE CONDITIONS OF THE PERMIT.
6. ROOT BARRIER NOTE: A MINIMUM ROOT ZONE OF 40 SQUARE FEET IN AREA SHALL BE PROVIDED FOR ALL TREES. THE MINIMUM DIMENSIONS FOR THIS AREA SHALL BE 5 FEET, PER LDC 142.0403(b)(5).
7. NO DEVIATIONS FROM PLANS SHALL OCCUR WITHOUT APPROVAL OF THE LANDSCAPE ARCHITECT.
8. ANY PROPOSED WORK THAT IS INCONSISTENT WITH COMMON, SAFE CONSTRUCTION PRACTICES SHALL BE BROUGHT TO THE ATTENTION OF THE LANDSCAPE ARCHITECT PRIOR TO COMMENCING WITH CONSTRUCTION.
9. CONTRACTOR SHALL VISIT SITE AND VERIFY ALL FIELD CONDITIONS PRIOR TO BEGINNING CONSTRUCTION.
10. CONTRACTOR SHALL DETERMINE THE LOCATION AND DEPTH OF ALL SITE UTILITIES PRIOR TO CONSTRUCTION. NOTIFY LANDSCAPE ARCHITECT OF ANY DISCREPANCIES IMMEDIATELY.
11. ALL HARDWARE SUCH AS NAILS, BOLTS, FASTENERS ETC. SHALL BE HOT DIPPED GALVANIZED UNLESS OTHERWISE NOTED.
12. UPON AWARD OF CONTRACT, THE CONTRACTOR SHALL NOTIFY SPECIFIED MATERIALS PROVIDERS OF PROJECT AND REQUIRED QUANTITIES.
13. ALL VERTICAL SURFACES, UNLESS OTHERWISE NOTED, SHALL RECEIVE GRAFFITI RESISTANT COATING PER SPECIFICATIONS.

**MINIMUM TREE SEPARATION DISTANCE**
TRAFFIC SIGNALS / STOP SIGNS - 20 FT.
UNDERGROUND UTILITY LINES - 5 FT. (10 FT. FOR SEWER)
ABOVE GROUND UTILITY STRUCTURES - 10 FT.
DRIVEWAY (ENTRIES) - 10 FT.
INTERSECTIONS:
(INTERSECTING CURB LINES OF TWO STREETS - 25 FT.)

**CONTRACTOR REPAIR / REPLACE NOTE**:
UNLESS OTHERWISE NOTED, IT IS THE RESPONSIBILITY OF THE CONTRACTOR TO REPAIR AND OR REPLACE ANY DAMAGED IRRIGATION / PLANT MATERIAL WHICH IS TO BE BE PROTECTED IN PLACE DURING THE CONSTRUCTION PROCESS. REPLACEMENT WILL REQUIRE EXACT MATCH OF DAMAGED COMPONENT / PLANT MATERIAL OR EQUAL TO BE APPROVED BY THE LANDSCAPE ARCHITECT PRIOR TO REINSTALLATION .

**LANDSCAPE SHEET LEGEND**:
LANDSCAPE CONSTRUCTION PLAN, LEGEND, NOTES - SHEET LC-1.0
LANDSCAPE CONSTRUCTION DETAILS - SHEET LC-2.0
LANDSCAPE IRRIGATION PLAN, LEGEND, NOTES - SHEET LI-1.0
LANDSCAPE CONSTRUCTION DETAILS - SHEET LI-2.0
LANDSCAPE PLANTING PLAN, LEGEND, NOTES - SHEET LP-1.0
LANDSCAPE PLANTING DETAILS - SHEET LP-2.0

0 10 20 40
Plan Graphic Scale: 1" = 20'-0"

**County of San Diego**
**Cedar & Kettner**
**Development Project**
San Diego, California

McCARTHY
20401 S.W. BIRCH STREET SUITE 300
Newport Beach, California 92660

IPD
Alameda
Irvine
Los Angeles
Architecture / Engineering / Consulting
www.ipd-global.com
2 Faraday, Suite 101, Irvine CA 92618
Phone 949 595 8004 Fax 949 595 8011

SCHMIDT DESIGN GROUP, INC.
BALANCING ARTISTIC EXPRESSION IN DESIGN WITH ENVIRONMENTAL SENSITIVITY
2655 Fourth Avenue, San Diego, CA 92103
telephone (619) 236-1462 facsimile (619) 236-8792
www.schmidtdesign.com
LIC. CA 2138, NV 219, AZ 34139

LICENSED LANDSCAPE ARCHITECT
JEFF J. JUSTUS No. 4372
JUNE 31-15
RENEWAL DATE
DATE
NOT FOR CONSTRUCTION
STATE OF CALIFORNIA

| Revision | Date |
|---|---|
| 100% DESIGN DEVELOPMENT | 10/23/13 |
| 90% CDs - 1ST PLAN CHECK | 12/24/13 |
| 2ND PLAN CHECK | 04/23/13 |

| | |
|---|---|
| Date | 04.23.2014 |
| SDG Job No. | 13-100 |
| Drawn By | NL |
| Checked By | JJ |
| Scale | 1" = 20'-0" |

CONSTRUCTION DOCUMENTS

Drawing Title
LANDSCAPE CONSTRUCTION PLAN, LEGEND + NOTES

Drawing No.
LC-1.0

IPD, Inc.

LEGEND:
1. SCORE LINES AND EXPANSION JOINTS PER SOILS REPORT.
2. CONCRETE PAVING - PER CHART
3. 1/2 RAD. ON ALL OUTSIDE EDGES.
4. FINISH GRADE 1" BELOW EDGE OF PAVING IN TURF AREAS TO HAVE SOD, 1/2" IN AREAS TO BE HYDROSEEDED, 2" IN SHRUB BEDS.
5. COMPACTED SUBGRADE PER SOILS REPORT.
6. BASE MATERIAL - PER CHART. CLASS II AGGREGATE TYPICAL.
7. REBAR - SEE CHART FOR SIZE

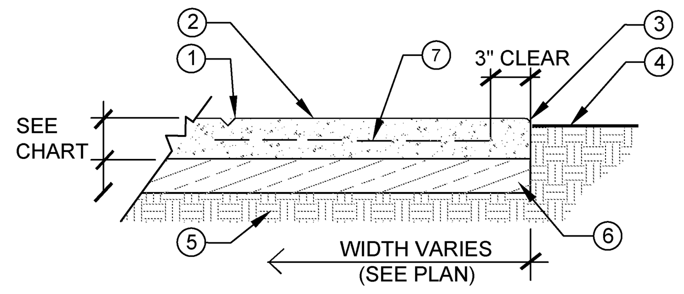


NOTES:
A. AT A MINIMUM PROVIDE THE FOLLOWING: CONSTRUCTION JOINTS: 10' O.C. EXPANSION JOINTS: 30' O.C.
B. ALL REINFORCEMENT MUST BE CENTERED IN CONCRETE PROFILE.
C. CONCRETE COLOR AND FINISH PER PLAN.
D. CONTRACTOR TO FOLLOW RECOMMENDATIONS OF SOILS REPORT AND/OR STRUCTURAL ENGINEER.

CONCRETE PAVING CHART

| TYPE | THICKNESS | STRENGTH | REBAR |
|---|---|---|---|
| PEDESTRIAN CONCRETE WALKS & SLABS | 4" MIN. OVER NATIVE | 520-C-2500 | #3 BAR AT 18" O.C. BOTH WAYS |
| VEHICULAR CONCRETE | 6" MIN. OVER 6" CLASS II BASE | 520-C-4000 | #4 BAR AT 18" O.C. BOTH WAYS |

## 1 CONCRETE PAVING
NO SCALE

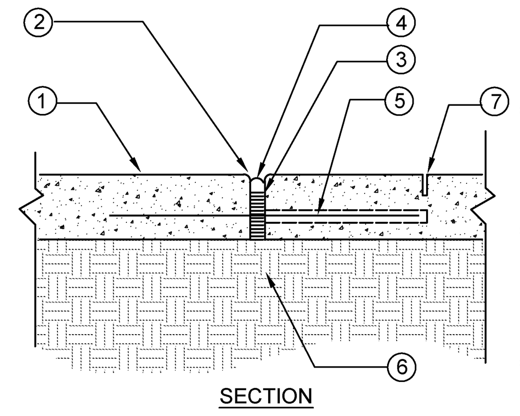


LEGEND:
1. CONCRETE PAVING
2. 3/16 RADIUS - 1/4" DEPTH TOOLED EDGE
3. 1/4" FELT EXPANSION JOINT
4. POLYURETHANE SEALANT 'SONNEBORN' SL-2 SLOPE GRADE - CONFORM TO ASTM C920 TYPE M - GRADE T
5. 5/8" (#4) x 12" LONG SMOOTH STEEL BAR AT 36" ON CENTER MAX., ONE SIDE WITHIN SLEEVE FOR MOVEMENT AT ALL EXPANSION JOINTS (SPEED DOWEL OR EQUAL)
6. COMPACTED SUBGRADE PER SOILS REPORT
7. SCORE LINE, SAW CUT OR HAND TROWEL AT 1/2 INCH DEPTH TYPICAL PER PLAN

NOTES:
A. SEE LANDSCAPE CONSTRUCTION PLAN FOR EXPANSION JOINT LOCATIONS
B. AT A MINIMUM PROVIDE EXPANSION JOINTS FOR EVERY 400 SF OF CONTIGUOUS CONCRETE PAVING

## 2 EXPANSION / CONTROL JOINT
NO SCALE

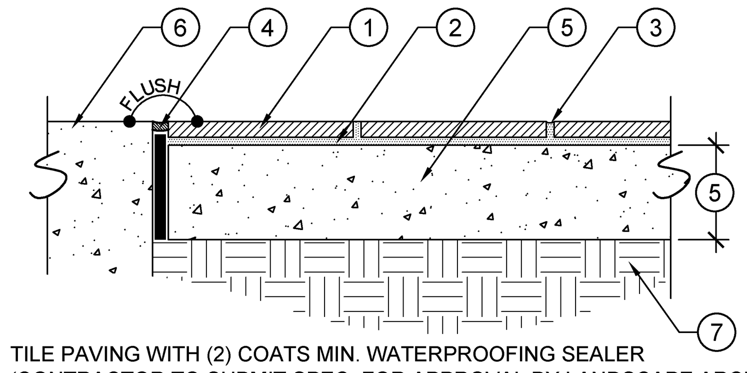


1. TILE PAVING WITH (2) COATS MIN. WATERPROOFING SEALER (CONTRACTOR TO SUBMIT SPEC. FOR APPROVAL BY LANDSCAPE ARCHITECT PRIOR TO APPLICATION - SEE LANDSCAPE PLANS FOR LOCATION)
2. 1/4" THINSET MORTAR BED
3. 1/4" GROUT JOINT (GROUT COLOR TO MATCH TILE PAVING - CONTRACTOR TO SUBMIT SAMPLE FOR APPROVAL PRIOR TO INSTALLATION)
4. 1/2" EXPANSION JOINT WITH SEALER (COLOR TO MATCH GROUT)
5. 4" THICK CONCRETE BASE
6. ADJACENT CONCRETE PAVING (SEE PLANS)
7. SOIL SUBGRADE - COMPACTED PER SOILS REPORT

**NOTE:**
- TILE PAVING SURFACE AND ADJACENT PAVING SURFACE TO BE FLUSH, TYP.
- CONTRACTOR TO SLOPE TILE SURFACE MIN. 1% AWAY FROM ALL STRUCTURES, TYP.

## 3 TILE PAVING OVER CONCRETE SLAB
3" = 1'-0"

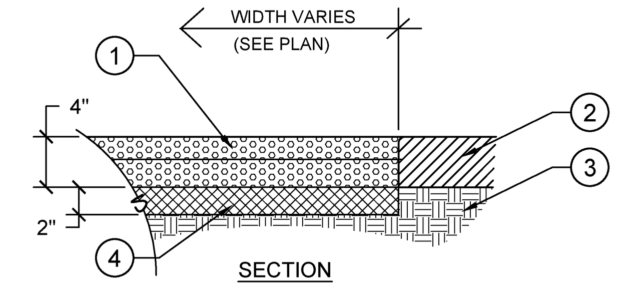


1. DECOMPOSED GRANITE PAVING PAVING WITH SOIL STABILIZER TO BE PLACED IN (2) 2" LIFTS OVER CLASS II AGGREGATE BASE. ROLL BOTH LAYERS SEPARATELY TO 95% MIN. COMPACTION. PAVING TO MEET FLUSH WITH TOP OF CONCRETE PAVING
2. CONCRETE PAVING, CONCRETE CURB OR ADJACENT AGGREGATE
3. COMPACTED SUBGRADE PER SOILS REPORT
4. 2" THICK CLASS II BASE COMPACTED @ 95% MIN.

NOTES:
A. SEE CONSTRUCTION PLAN FOR DECOMPOSED GRANITE PAVING. TYPE AND MANUFACTURER PER LEGEND.
B. CONTRACTOR SHALL SUBMIT SAMPLE OF DECOMPOSED GRANITE PAVING PRIOR TO INSTALLATION FOR APPROVAL OF COLOR.
C. STABILIZER TO BE BLENDED INTO DECOMPOSED GRANITE PAVING PRIOR TO DELIVERY TO SITE.

## 4 STABILIZED DECOMPOSED GRANITE PAVING
NTS

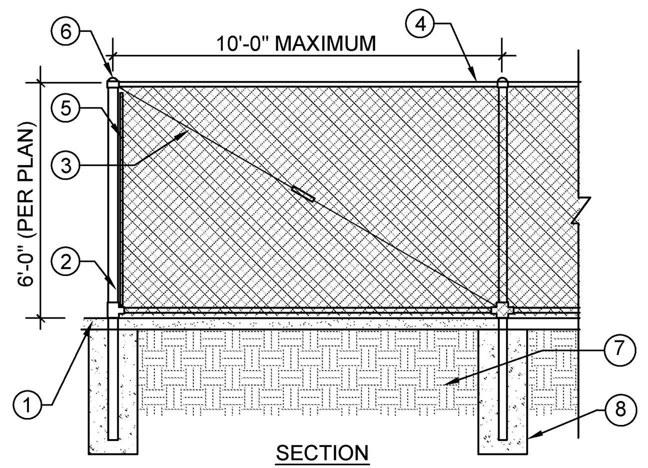


LEGEND:
1. CONCRETE MOW CURB AT FENCE OR CONCRETE PAVING
2. END OR CORNER POSTS (SEE CHART FOR SIZES)
3. 3/8" CIRCULAR TRUSS ROD WITH TRUSS TIGHTENER, SEE SDRSD M-20
4. MID RAIL (SEE CHART FOR SIZES)
5. 3/4"x3/16" TENSION BAR W/ 1"x14 GAUGE BANDS AT 2'-0" ON CENTER TYP.
6. PRESSED STEEL CAP - POST SIZE
7. COMPACTED SUBGRADE 90%
8. CONCRETE FOOTING (SEE FOOTING CHART FOR SIZES)

FENCING NOTES:
A. GATE FRAMES SHALL BE 1-5/8" SS40 GALVANIZED WITH STANDARD HEAVY DUTY HINGES AND LATCH. (SDSRD M-5)
B. GATES SHALL HAVE STOP PLATES AND WELDED LATCHING (GALV.).
C. ALL CHAIN LINK FENCE FABRIC SHALL BE NINE (9) GAUGE ALUMINIZED STEEL CORE FABRIC WITH VINYL COATING PER SDRSD SDM-112
D. FABRIC TO BE TWO (2) INCH MESH
E. ALL CHAIN LINK FENCING SHALL HAVE A TOP RAIL, AND BOTTOM RAIL. TEN (10) AND EIGHT (8') FOOT HIGH CHAIN LINK FENCE SHALL BE CONSTRUCTED WITH A MID-RAIL. FABRIC SHALL BE KNUCKLED ON ALL SIDES.
F. ALL CHAIN LINK FABRIC SHALL BE MOUNTED ON THE SIDE OF THE POSTS TOWARD THE PLAYING FIELD.
G. ALL HARDWARE, TENSION WIRE, TIE WIRE, TRUSS RODS AND GATES SHALL BE HOT DIPPED GALVANIZED.
H. CONTRACTOR SHALL BE RESPONSIBLE FOR SUPPLYING ALL HARDWARE REQUIRED FOR FENCING AND GATES.
I. ALL FENCE POSTS, BRACES AND RAILS SHALL CONSIST OF NEW GALVANIZED PIPE MANUFACTURED IN ACCORDANCE WITH A.S.T.M. DESIGNATION A-120 AND SHALL BE OF THE FOLLOWING SIZES AND WEIGHTS:

- 6' HIGH CHAIN LINK FENCE:

| POST LOCATION | 4' | | NOMINAL DIAMETER IN INCHES |
|---|---|---|---|
| END AND CORNER | 2.5" | | STANDARD |
| LINE POSTS | 2" | | STANDARD |
| RAILS | 1.25" | | STANDARD |

- FOOTING SIZES SHALL BE AS FOLLOWS:

| FENCE HEIGHT | END OR CORNER POST FOOTING WIDTH | LINE POST FOOTING WIDTH | FOOTING DEPTH |
|---|---|---|---|
| SIX (6') FOOT HEIGHT | 10" | 10" | 3'-6" |

## 5 NOT ASSIGNED

## 6 CHAINLINK FENCE, TYPICAL
NTS

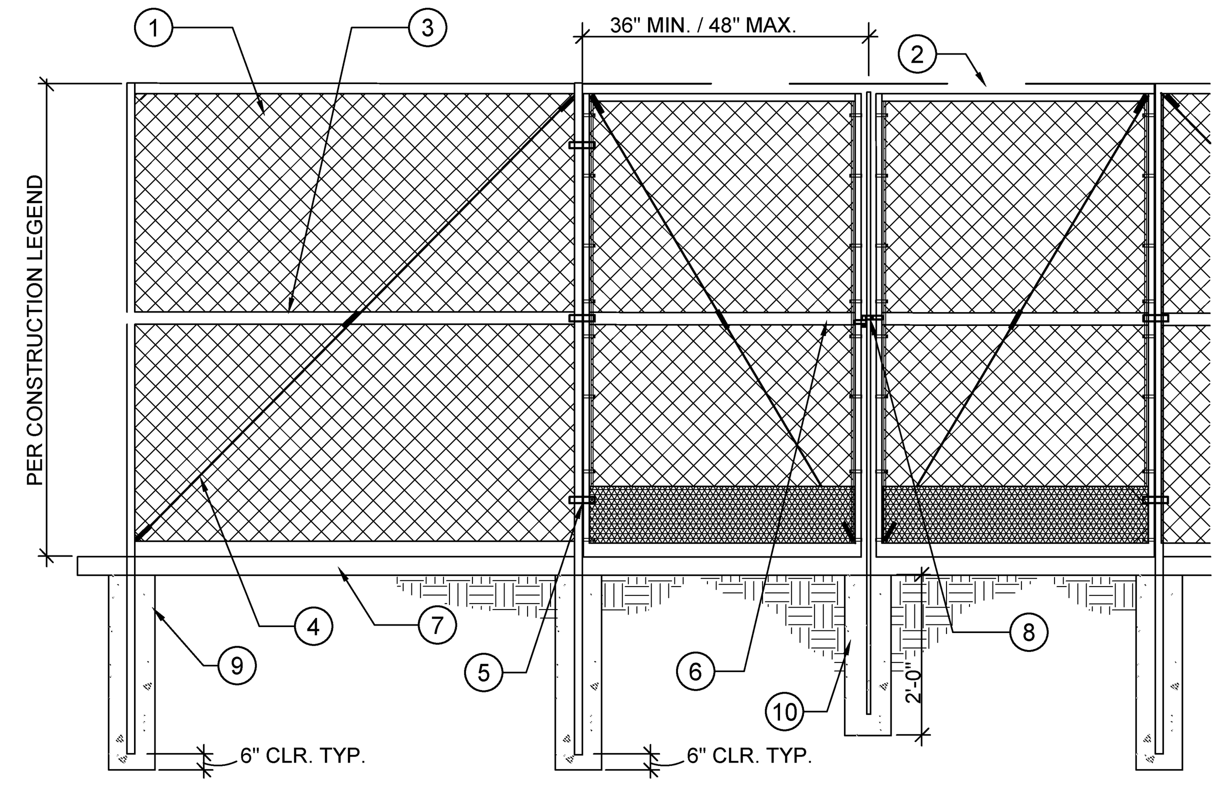


1. 9 GAUGE WIRE WITH 2" MESH GALVANIZED
2. GATE WITH 1.875" O.D. PIPE FRAME
3. INSTALL MID-RAIL TWO FENCE SECTIONS FROM GATE ONLY BOTH SIDES
4. 3/8" CIRCULAR TRUSS ROD WITH TRUSS TIGHTENER BOTH SIDES
5. HEAVY DUTY GALVANIZED HINGES
6. GATE LATCH. COLOR: GALVANIZED.
7. CONCRETE CURB OR SIDEWALK PER PLAN
8. FORK LATCH AND DROP ROD WITH GUIDE
9. POST FOOTING PER FOOTING TABLE IN DETAIL 6/LC-2.0
10. 10" DIAMETER STOP FOOTING

## 7 DOUBLE PEDESTRIAN CHAIN LINK GATE
NO SCALE

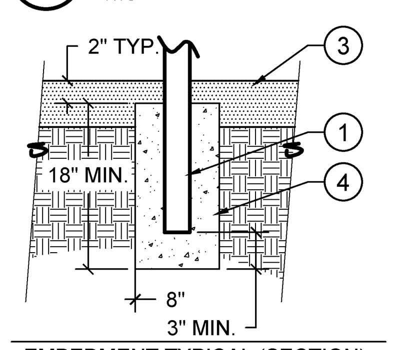


EMBEDMENT TYPICAL (SECTION)

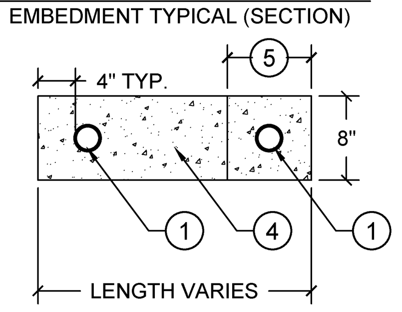


EMBEDMENT TYPICAL (PLAN)

NOTES:
A. SEE CONSTRUCTION PLAN FOR DECOMPOSED GRANITE PAVING TYPE AND LOCATION.

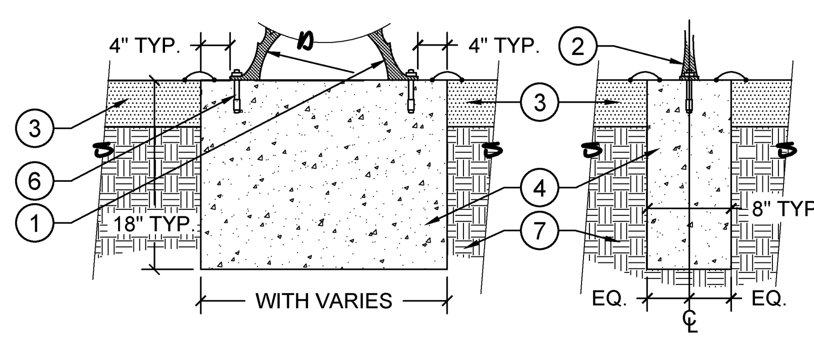


SURFACE MOUNT TYPICAL (SIDE SECTION) (FRONT)

1. SITE BENCH / RECEPTACLE EMBEDMENT POST (SEE CONSTRUCTION LEGEND - INSTALL PER MANUFACTURERS RECOMMENDATIONS)
2. SITE FURNISHING WITH SURFACE MOUNT OPTION ONLY
3. ADJACENT DECOMPOSED GRANITE (SEE LANDSCAPE PLANS)
4. CONCRETE FOOTING (TO BE A MONOLITHIC POUR BETWEEN ANCHOR / EMBEDMENT LOCATIONS FOR BENCHES WITH (2) SUPPORT LOCATIONS - TO BE FLUSH WITH TOP OF D.G. PAVING)
5. SINGLE POLE EMBEDMENT FOOTING (TO BE 8" SQ. x 18" MIN. DEPTH)
6. GALVANIZED CONCRETE ANCHOR (SIZE AS REQUIRED - 5" LENGTH MIN. - INSTALL PER MANUFACTURERS RECOMMENDATIONS)
7. SOIL SUBGRADE - COMPACT PER SOILS REPORT

## 8 SITE FURNISHING INSTALL WITHIN D.G.
NO SCALE

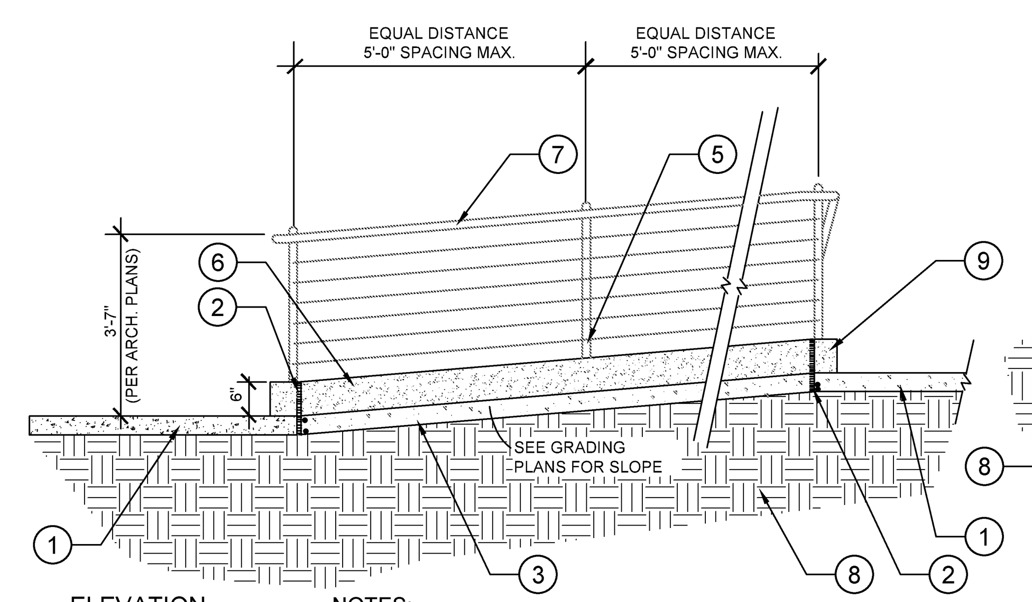


ELEVATION

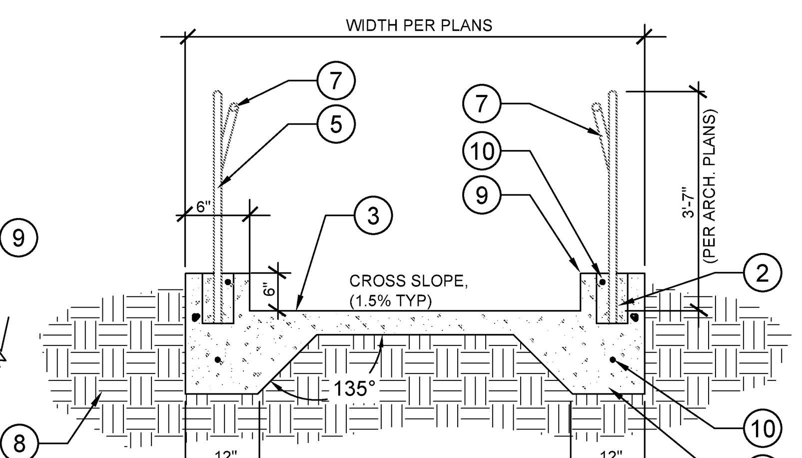


SECTION

NOTES:
A. CONTRACTOR SHALL SUBMIT SHOP DRAWINGS FOR APPROVAL PRIOR TO CONSTRUCTION.
B. ALL POSTS & RAILS TO MATCH ARCHITECTURAL RAILINGS (SEE ARCHITECTURAL PLANS).
C. WELD AND GRIND SMOOTH ALL CONNECTIONS, EDGES, AND CORNERS TO ELIMINATE ANY SHARP EDGES
D. $\frac{1}{4}$" GROOVE FINISH ON ALL WEARING SURFACES. DIRECTION OF GROOVE SWEEP TO BE 30 DEGREES PERPENDICULAR TO CROSS SLOPE. TROWELED FINISH ON ALL OTHER EXPOSED SURFACES.

1. CONCRETE PAVING WIDTH VARIES (SEE PLANS)
2. EXPANSION JOINT
3. SURFACE SHALL SLOPE AT 1% MIN. FOR DRAINAGE. (SEE GRADING PLANS)
4. THICKENED CONCRETE EDGE
5. POSTS (TO MATCH ARCHITECTURE DETAILS)
6. 6" WIDE CHEEK WALL BOTH SIDES OF RAMP
7. RAMP HANDRAILS (TO MATCH SITE RAILINGS PER ARCHITECTURAL DETAILS)
8. COMPACT SUBGRADE PER SOILS REPORT
9. 1/2" RADIUS ON ALL EDGES TYPICAL
10. #4 REBAR HORIZONTAL AND CONTINUOUS OVERLAP SPLICES 12" MIN. CONTINUE REBAR AT POST LOCATIONS

## 9 CONCRETE RAMPING
NTS


**County of San Diego**
**Cedar & Kettner**
**Development Project**
San Diego, California

McCARTHY
20401 S.W. BIRCH STREET SUITE 300
Newport Beach, California 92660

IPD
Alameda
Irvine
Los Angeles
Architecture / Engineering / Consulting
www.ipd-global.com
2 Faraday, Suite 101, Irvine CA 92618
Phone 949 595 8004 Fax 949 595 8011

SCHMIDT DESIGN GROUP, INC.
BALANCING ARTISTIC EXPRESSION IN DESIGN WITH ENVIRONMENTAL SENSITIVITY
2655 Fourth Avenue, San Diego, CA 92103
telephone {619} 236-1462 facsimile {619} 236-8792
www.schmidtdesign.com
Lic. CA 2138, NV 219, AZ 34139

LICENSED LANDSCAPE ARCHITECT
JEFF J. JUSTUS No.
-31-15
RENEWAL DATE
DATE
STATE OF CALIFORNIA
NOT FOR CONSTRUCTION


| Revision | Date |
|---|---|
| 100% DESIGN DEVELOPMENT | 10/23/13 |
| 90% CDs - 1ST PLAN CHECK | 12/24/13 |
| 2ND PLAN CHECK | 04/23/13 |

| | |
|---|---|
| Date | 04.23.2014 |
| SDG Job No. | 13-100 |
| Drawn By | NL |
| Checked By | JJ |
| Scale | |

CONSTRUCTION DOCUMENTS

Drawing Title
LANDSCAPE CONSTRUCTION DETAILS

Drawing No.
LC-2.0


IPD, Inc.

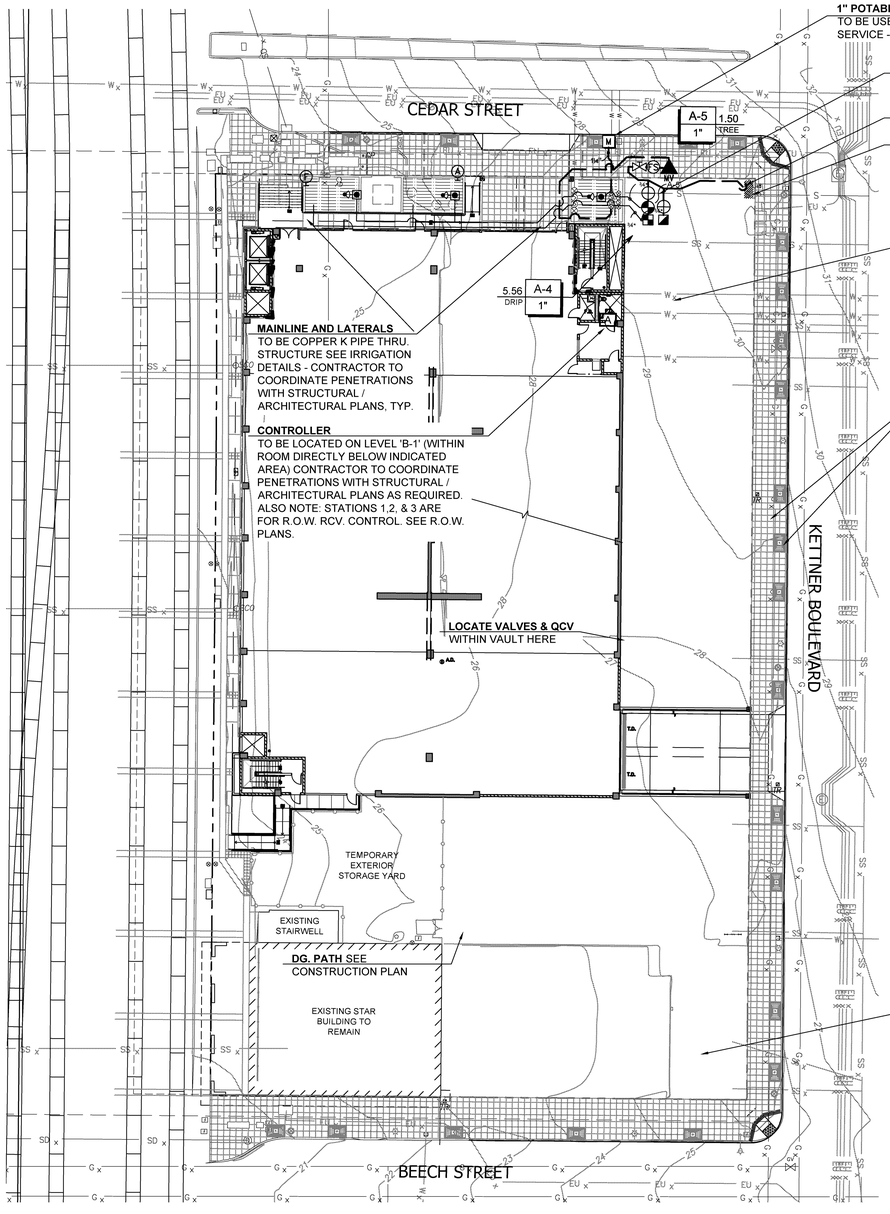


**1" POTABLE WATER METER**
TO BE USED FOR IRRIGATION SERVICE - SEE ALSO CIVIL PLANS

**LOCATE VALVES & QCV**
WITHIN VAULT AGAINST PLANTER

**ROW IRRIGATION STUBOUT**
SEE ROW PLANS

**ROW IRRIGATION VAULT**
LOCATION SEE ROW PLANS

**TEMPORARY LANDSCAPE**
SEE CONSTRUCTION PLAN

**MAINLINE AND LATERALS**
TO BE COPPER K PIPE THRU. STRUCTURE SEE IRRIGATION DETAILS - CONTRACTOR TO COORDINATE PENETRATIONS WITH STRUCTURAL / ARCHITECTURAL PLANS, TYP.

**CONTROLLER**
TO BE LOCATED ON LEVEL 'B-1' (WITHIN ROOM DIRECTLY BELOW INDICATED AREA) CONTRACTOR TO COORDINATE PENETRATIONS WITH STRUCTURAL / ARCHITECTURAL PLANS AS REQUIRED. ALSO NOTE: STATIONS 1,2, & 3 ARE FOR R.O.W. RCV. CONTROL. SEE R.O.W. PLANS.

**STREETSCAPE**
SEE ROW. PLANS 37763-D

**LOCATE VALVES & QCV**
WITHIN VAULT HERE

**DG. PATH** SEE CONSTRUCTION PLAN

**TEMPORARY LANDSCAPE**
SEE CONSTRUCTION PLAN

**CONTRACTOR REPAIR / REPLACE NOTE**:
UNLESS OTHERWISE NOTED, IT IS THE RESPONSIBILITY OF THE CONTRACTOR TO REPAIR AND OR REPLACE ANY DAMAGED IRRIGATION / PLANT MATERIAL WHICH IS TO BE BE PROTECTED IN PLACE DURING THE CONSTRUCTION PROCESS. REPLACEMENT WILL REQUIRE EXACT MATCH OF DAMAGED COMPONENT / PLANT MATERIAL OR EQUAL TO BE APPROVED BY THE LANDSCAPE ARCHITECT PRIOR TO REINSTALLATION .

POC. 'M' CRITICAL ANALYSIS

| | |
|---|---|
| Generated: | 2014-04-22 15:38 |
| P.O.C. NUMBER:01 | |
| Water Source Information: | Also see civil plans. Incoming PSI to be confirmed on site. |
| FLOW AVAILABLE | |
| Water Meter Size: | 3/4" |
| Flow Available: | 18.20 gpm |
| PRESSURE AVAILABLE | |
| Static Pressure at POC: | 88.00 psi |
| Elevation Change: | 5.00 ft |
| Service Line Size: | 1" |
| Length of Service Line: | 20.00 ft |
| Pressure Available: | 84.00 psi |
| DESIGN ANALYSIS | |
| Maximum Multi-valve Flow: | 20.00 gpm |
| Flow Available at POC: | 18.20 gpm |
| Residual Flow Available: | -1.80 gpm |
| Critical Station: | A-4 |
| Design Pressure: | 40.00 psi |
| Loss Elev. high head to valve: | 0.00 psi |
| Pipe Loss Critical Head: | 0.78 psi |
| Loss Fitting Factor: | 0.08 psi |
| Loss through Valve: | 5.56 psi |
| Pressure Req. at Critical Station: | 46.42 psi |
| Loss for Fittings: | 0.04 psi |
| Loss for Main Line: | 0.43 psi |
| Loss for POC to Valve Elevation: | 0.00 psi |
| Loss for Backflow: | 12.05 psi |
| Loss for Master Valve: | 0.40 psi |
| Loss for Water Meter: | 6.50 psi |
| Critical Station Pressure at POC: | 65.84 psi |
| Pressure Available: | 84.00 psi |
| Residual Pressure Available: | 18.16 psi |

IRRIGATION SCHEDULE

| SYMBOL | MANUFACTURER/MODEL | ARC | PSI | GPM | RADIUS | DETAIL |
|---|---|---|---|---|---|---|
| | HUNTER PROS-04-CV-MSBN | 90 | 30 | 0.25 | 1' | 9 / LI-2.0 |
| | HUNTER RZWS-SLEEVE-36-25CV | 360 | 30 | 0.25 | 1' | 10,11 / LI-2.0 |

| SYMBOL | MANUFACTURER/MODEL/DESCRIPTION | DETAIL |
|---|---|---|
| | HUNTER PCZ-101-40<br>DRIP CONTROL VALVE KIT. 1" PGV GLOBE VALVE WITH 1" HY100 FILTER SYSTEM. PRESSURE REGULATION: 40PSI. FLOW RANGE: 0.5 GPM TO 15 GPM. 150 MESH STAINLESS STEEL SCREEN. | 8 / LI-2.0 |
| F | TORO T-FCH-H-FIPT<br>AUTOMATIC FLUSH VALVE, PLUMBED TO FLUSH MANIFOLD AT LOW POINT. | 13,14 / LI-2.0 |
| A | TORO T-YD-500-34<br>DRIPLINE AIR RELIEF VALVE PLUMBED TO DRIP TUBING AT EACH HIGH POINT. | 13,15 / LI-2.0 |
| | AREA TO RECEIVE DRIPLINE<br>TORO T-PCB-1853-12 (12)<br>DRIP-IN PRESSURE COMPENSATING LANDSCAPE DRIPLINE. 0.53GPH EMITTERS AT 12.0" O.C. DRIPLINE LATERALS SPACED AT 12.0" APART, WITH EMITTERS OFFSET FOR TRIANGULAR PATTERN. | 13 / LI-2.0 |

| SYMBOL | MANUFACTURER/MODEL/DESCRIPTION | DETAIL |
|---|---|---|
| | HUNTER ICV-G<br>1" PLASTIC ELECTRIC REMOTE CONTROL VALVES, GLOBE CONFIGURATION, WITH NPT THREADED INLET/OUTLET, FOR COMMERCIAL/MUNICIPAL USE. | 8 / LI-2.0 |
| | RAIN BIRD 44-LRC<br>1" BRASS QUICK-COUPLING VALVE, WITH CORROSION-RESISTANT STAINLESS STEEL SPRING, LOCKING THERMOPLASTIC RUBBER COVER, AND 2-PIECE BODY. LOCATE WITHIN TREE GRATE AND PROVIDE REMOVABLE ACCESS. | 8 / LI-2.0 |
| | NIBCO T-113-K<br>CLASS 125 BRONZE GATE SHUT OFF VALVE WITH CROSS HANDLE, SAME SIZE AS MAINLINE PIPE DIAMETER AT VALVE LOCATION. MAINLINE SIZE. | 8, / LI-2.0 |
| | NIBCO T-235Y<br>CLASS 150 BRONZE GLOBE SHUT OFF VALVE WITH CROSS HANDLE, SAME SIZE AS MAINLINE PIPE DIAMETER AT VALVE LOCATION. MAINLINE SIZE. | 8 / LI-2.0 |
| MV | BUCKNER-SUPERIOR 3100 1"<br>1" NORMALLY OPEN BRASS MASTER VALVE THAT PROVIDES DIRTY WATER PROTECTION. | 2 / LI-2.0 |
| | REDUCED PRESSURE BACKFLOW PREVENTER<br>(SEE CIVIL PLANS) | PER CIVIL |
| A | RAIN BIRD ESP-24MC<br>24 STATION OUTDOOR CONTROLLER FOR COMMERCIAL USE. FOUR PROGRAM, HYBRID CONTROLLER. EXTRA SIMPLE PROGRAMMING, SURGE PROTECTION. STEEL CABINET. | 1 / LI-1.0 |
| NO SYMBOL | RAIN BIRD WR2-RS WITH HIGH-FLOW SHUTOFF DEVICE WIRELESS RAIN SENSOR. CONTRACTOR TO COORDINATE LOCATION ON SITE WITH RESIDENT ENGINEER. | PER MANUF. |
| FS | FLOW SENSOR<br>TO BE BADGER IR-220P MAINLINE SIZE. INSTALL PER MANUFACTURERS RECOMMENDATIONS. LOCATION TBD | 3 / LI-2.0 |
| NO SYMBOL | V.I.T. PRODUCTS STRONG BOX SMOOTH TOUCH ENCLOSURE SBBC-SS LOW PROFILE, TUBE AND WIRE CONSTRUCTION SMOOTH TOUCH SURFACE, STAINLESS STEEL BACKFLOW ENCLOSURE. SIZE AS REQUIRED. SHALL NOT EXCEED 23.5"L, 28"H, 17.75"W IN SIZE UNLESS OTHERWISE APPROVED BY LANDSCAPE ARCHITECT. INSTALL PER MANUFACTURERS RECOMMENDATIONS. | 1 / LI-2.0 |
| M | WATER METER 3/4"<br>ALSO SEE CIVIL PLANS. INCOMING PSI TO BE CONFIRMED ON SITE. | PER CIVIL |
| | IRRIGATION LATERAL LINE: PVC CLASS 200 SDR 21<br>PVC CLASS 200 IRRIGATION PIPE. | 3 / LI-1.0 &<br>12 / LI-2.0 |
| | IRRIGATION MAINLINE: PVC SCHEDULE 40 | 3 / LI-1.0 &<br>12 / LI-2.0<br>2 / LI-1.0 |

VALVE CALLOUT:

A28 / 25.2 / 1" / SHRUB
- CONTROLLER ID
- STATION SEQUENCE #
- VALVE FLOW (GPM)
- PLANT MATERIAL
- VALVE SIZE

**LATERAL / MAINLINE NOTE:**
CONTRACTOR SHALL USE COPPER K PIPE WHEN ROUTING THRU STRUCTURE, SEE DETAILS.

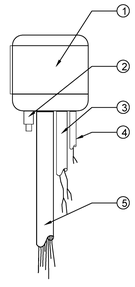

LEGEND:

1. WALL MOUNTED CONTROLLER PER PLAN
2. JUNCTION BOX; 3/4" RIGID SWEEP ELL CONDUIT TO POWER SOURCE. HOOK-UP WITH BUILDING TO PROVIDE 120V POWER.
3. 1-1/2" INCH CONDUIT DIRECT BURIAL TO MASTER VALVE / FLOWER WIRE.
4. 1" INCH CONDUIT FOR PHONE COMMUNICATION. COORDINATE WITH BUILDING PLANS TO CONNECT TO PHONE SOURCE.
5. 2" INCH CONDUIT FOR DIRECT BURIAL WIRES TO VALVES.

NOTE:
A. CONTRACTOR TO PROVIDE PVC SLEEVE FOR CONNECTIONS THAT ARE UNDER HARDSCAPE.

## 1 WALL MOUNTED CONTROLLER
NTS

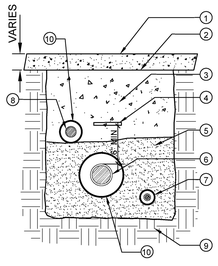


LEGEND:

1. PAVING PER PLAN
2. FINISHED GRADE
3. CLEAN COMPACTED BACKFILL
4. MARKING STRIP
5. SAND BEDDING MATERIAL
6. IRRIGATION MAINLINE PER PLAN
7. DIRECT BURIAL CONTROL WIRES
8. LATERAL LINES PER PLAN
9. UNDISTURBED SOIL
10. SCH. 40 PVC SLEEVE 2x PIPE SIZE DIAMETER MIN.

NOTE:
1. ALL PIPE AND CONTROL WIRE UNDER PAVEMENT SHALL BE INSTALLED IN A P.V.C. SLEEVE.
2. BACKFILL MATERIAL SHALL BE COMPACTED TO A RELATIVE COMPACTION OF 90% MIN.
3. PRESSURE MAINLINE SHALL BE INSTALLED ON A 6" SAND BED AND COVERED BY 6" OF SAND PRIOR TO ANY OTHER BACKFILL MATERIAL

## 2 SLEEVING UNDER PAVEMENT
NO SCALE

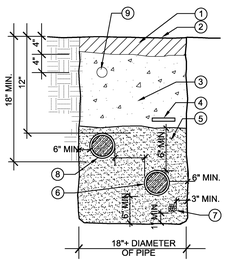


LEGEND:

1. IMPORTED TOPSOIL OR AMMENDED NATIVE SOIL
2. FINISHED GRADE
3. NATIVE SOIL FREE OF ROCKS AND DEBRIS 3" OR GREATER
4. TRENCH MARKER
5. SAND BEDDING MATERIAL
6. IRRIGATION MAINLINE
7. DIRECT BURIAL CONTROL WIRES
8. IRRIGATION LATERAL LINE
9. IN LINE DRIP TUBING

NOTES:
1. TRENCH MARKER SHALL BE A 3" WIDE CONTINUOUS METALLIC PLASTIC STRIP ABOVE THE MAINLINE AND DIRECT BURIAL CONTROL WIRES.
2. ALL PIPE AND CONTROL WIRE UNDER PAVEMENT SHALL BE INSTALLED IN A P.V.C. SLEEVE PER THE IRRIGATION SPECIFICATIONS.
3. BACKFILL MATERIAL SHALL BE COMPACTED TO A RELATIVE COMPACTION OF 90% MIN.

## 3 PIPING/DIRECT BURIAL CONTROL WIRE
NO SCALE

**LANDSCAPE SHEET LEGEND**:
LANDSCAPE CONSTRUCTION PLAN, LEGEND, NOTES - SHEET LC-1.0
LANDSCAPE CONSTRUCTION DETAILS - SHEET LC-2.0
LANDSCAPE IRRIGATION PLAN, LEGEND, NOTES - SHEET LI-1.0
LANDSCAPE CONSTRUCTION DETAILS - SHEET LI-2.0
LANDSCAPE PLANTING PLAN, LEGEND, NOTES - SHEET LP-1.0
LANDSCAPE PLANTING DETAILS - SHEET LP-2.0

0 10 20 40
Plan Graphic Scale: 1" = 20'-0"

**County of San Diego**
**Cedar & Kettner**
**Development Project**
San Diego, California

McCARTHY
20401 S.W. BIRCH STREET SUITE 300
Newport Beach, California 92660

IPD
Alameda
Irvine
Los Angeles
Architecture / Engineering / Consulting
www.ipd-global.com
2 Faraday, Suite 101, Irvine CA 92618
Phone 949 595 8004 Fax 949 595 8011

SCHMIDT DESIGN GROUP, INC.
BALANCING ARTISTIC EXPRESSION IN DESIGN WITH ENVIRONMENTAL SENSITIVITY
2655 Fourth Avenue, San Diego, CA 92103
telephone (619) 236-1462 facsimile (619) 236-8792
www.schmidtdesign.com
LIC. CA 2138, NV 219, AZ 34139

LICENSED LANDSCAPE ARCHITECT
JEFF J. JUSTUS No. 3627
NOT FOR CONSTRUCTION
31-15
EXPIRATION DATE
DATE
STATE OF CALIFORNIA

| Revision | Date |
|---|---|
| 100% DESIGN DEVELOPMENT | 10/23/13 |
| 90% CDs - 1ST PLAN CHECK | 12/24/13 |
| 2ND PLAN CHECK | 04/23/13 |

| | |
|---|---|
| Date | 04.23.2014 |
| SDG Job No. | 13-100 |
| Drawn By | NL |
| Checked By | JJ |
| Scale | 1" = 20'-0" |

CONSTRUCTION DOCUMENTS

Drawing Title
LANDSCAPE IRRIGATION PLAN, LEGEND + NOTES

Drawing No.
LI-1.0

IPD, Inc.

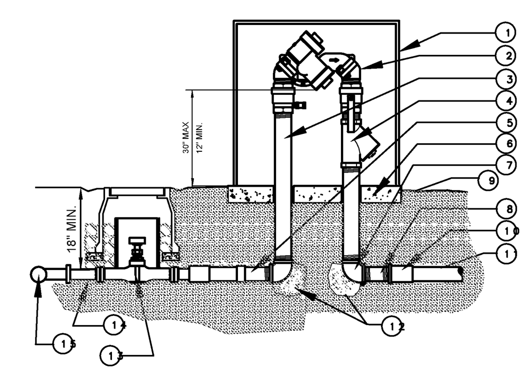


LEGEND:
1. PROTECTIVE ENCLOSURE PER PLANS INSTALL PER THE MANUFACTURER'S SPEC'S.
2. ¾" REDUCED PRESSURE BACKFLOW PREVENTION DEVICE MODEL 825YA.
3. BRASS THREADED RISER LENGHT AS NEEDED
4. WYE STRAINER (LINE SIZE)
5. BRASS MALE ADAPTER
6. 6" THICK CONCRETE PAD
7. COPPER THREADED ELL (2 REQUIRED)
8. 4" TYPE "K" COPPER NIPPLE
9. FINISH SURFACE
10. SCH. 40 PVC MALE ADAPTER
11. PVC SUPPLY LINE TO DRINKING FOUNTAIN PER PLANS FROM METER
12. CONCRETE THRUST BLOCKS. 1 CUBIC FT. MIN.
13. ¾" BALL VALVE PER DETAIL
14. TYPE "K" COPPER LINE (SIZE PER PLAN) WITH COPPER SOLDER FITTINGS AS REQ'D.
15. COPPER TEE AT COPPER LINE FROM METER TO DRINKING FOUNTAIN

NOTES:

A. ALL VALVES, FITTINGS & PIPES SHOWN ARE TO BE LINE SIZED EXCEPT WHERE INDICATED.

B. INSTALLATION SPECIFICATIONS SHOWN ARE SCHEMATIC AND DO NOT SUPERCEDE OR REPLACE ANY CITY OR STATE REQUIREMENTS. THE CONTRACTOR IS RESPONSIBLE FOR MEETING ALL APPLICABLE CODES.

C. ALL THREADED CONNECTIONS SHALL BE SEALED WITH OVERLAPPING TURNS OF TEFLON TAPE SUFFICIENT TO PREVENT LEAKAGE.

D. BACKFLOW PREVENTER ASSEMBLY SHALL BE TESTED UPON INSTALLATION BY A CERTIFIED BACKFLOW DEVICE TESTER. CONTRACTOR SHALL PROVIDE THE ENGINEER WITH WRITTEN TEST RESULTS COMPLETED BY A CERTIFIED BACKFLOW TESTER PRIOR TO BACKFLOW PREVENTER ASSEMBLY'S ACCEPTANCE BY THE ENGINEER.

E. ALL METAL IN CONTACT WITH CONCRETE SHALL BE POLYETHYLENE WRAPPED USING 2" WIDE PLASTIC BACKED ADHESIVE TAPE MIN. 2 MILS. THICK WITH 1/2" OVERLAP.

F. FACTORY ASSEMBLED DOUBLE CHECK ASSEMBLY REDUCED PRESSURE PRINCIPLE ASSEMBLY SHALL BE INCLUDED IN THE LASTEST EDITION OF THE "APPROVED FOR SERVICE ISOLATION IN CALIFORNIA PUBLIC WATER SYSTEMS" ISSUED BY THE STATE OF CALIFORNIA DEPARTMENT OF HEALTH SERVICES, OFFICE OF DRINKING WATER.

## 1 BACKFLOW PREVENTER ASSEMBLY

NTS

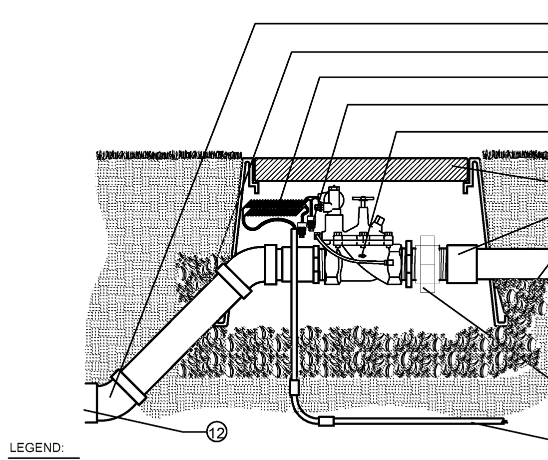

LEGEND:
1. SLIP X SLIP 45 DEGREE ELL (2 REQUIRED)
2. ¾" GRAVEL SUMP IN, UNDER, AND AROUND VALVE BOX FILL TO TOP OF VALVE BOXES
3. USE ½" PVC SCRAP TO WRAP 12" OF ADDITIONAL WIRE BEFORE CONNECTING
4. CONNECT WIRES TO VALVE USING WATER TIGHT CONNECTORS
5. MASTER VALVE LEGEND
6. FINISH SURFACE
7. RECTANGULAR CONCRETE VALVE BOX W/ LOCKING HINGED CAST IRON LID. PAINT LID PURPLE FOR RECYCLED WATER USE.
8. PVC SCH. 40 MALE ADAPTER (2 REQUIRED)
9. PRESSURE SUPPLY LINE,ALIGN WITH FLOW SENSOR (SEE PLAN FOR SIZE)
10. SCH. 80 PVC UNION O-RING TYPE LASCO OR EQUAL
11. 1-¼" SCH. 40 WIRE CONDUIT WITH SWEEP FOR MASTER VALVE WIRES (TO FLOW SENSOR)
12. PVC PIPE

## 2 MASTER VALVE

NTS

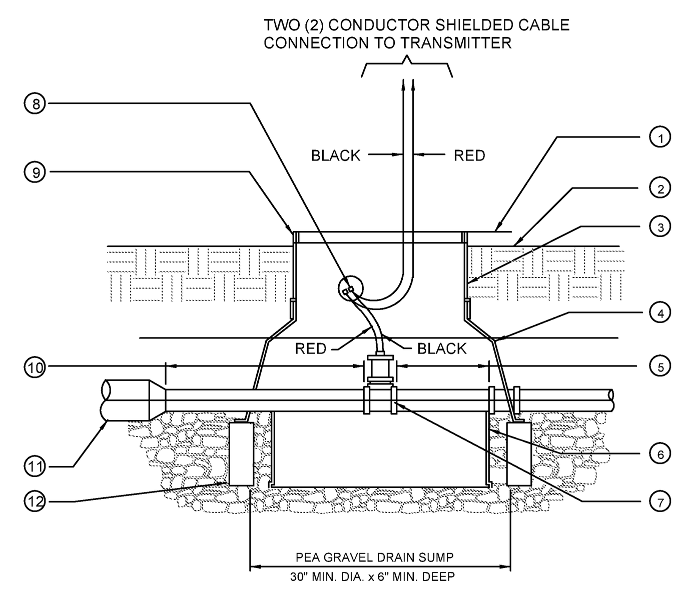


LEGEND:
1. 1" IN TURF AREAS 2" IN SHRUB AREAS
2. FINISH GRADE
3. EXTENSION
4. JUMBO BOX
5. 5 x PIPE DIA.
6. EXTENSION
7. FLOW SENSOR
8. WATERPROOF CONNECTIONS
9. JUMBO PLASTIC VALVE BOX W/ 2-6" EXTENSIONS AND LOCKING COVER, AMETEK OR EQUAL
10. 10 x PIPE DIA.
11. MAINLINE
12. BRICK REINFORCEMENT, TYPICAL

## 3 FLOW SENSOR

NO SCALE

## 4 NOT ASSIGNED

No Scale

## 5 NOT ASSIGNED

NO SCALE

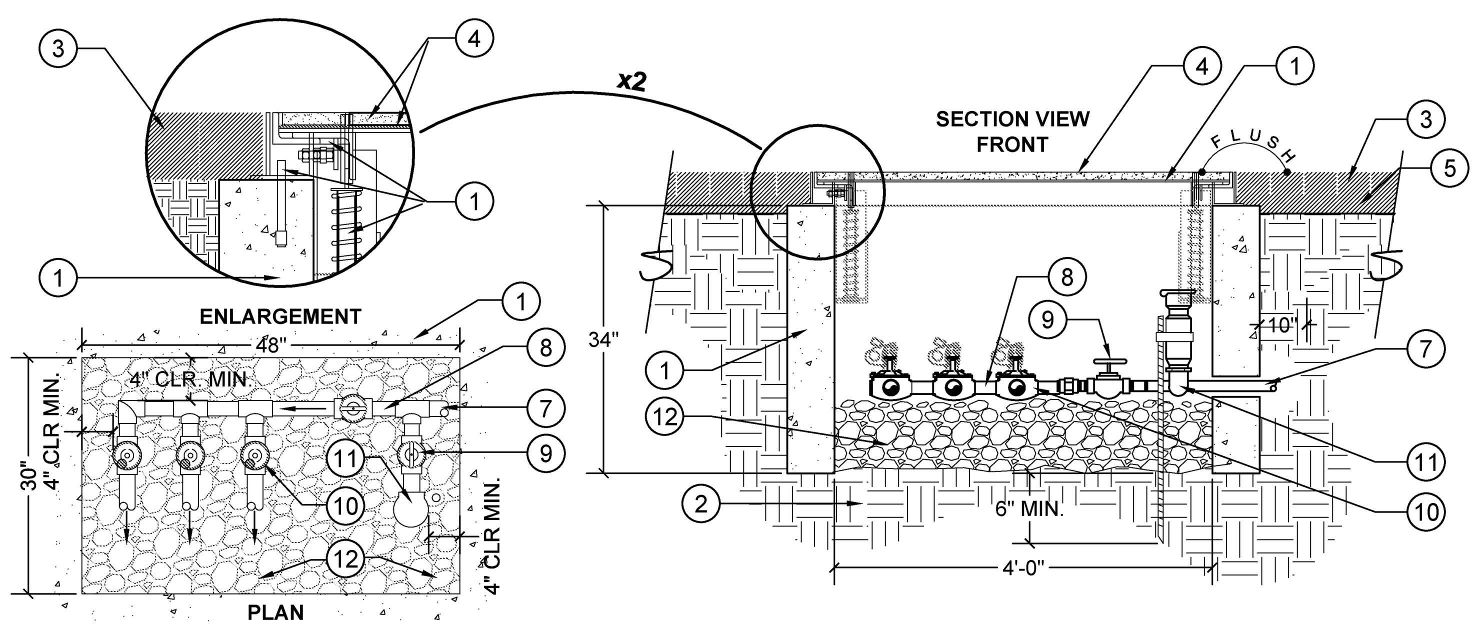


1. 30" X 48" JENSEN PRECAST CONCRETE VAULT WITH ALUMINUM ACCESS HATCH. MODEL# 3048-FH34-RTPS. JENSEN CONTACT: TOM MORALES, PH: (909) 429-3142.
2. SOIL SUBGRADE - COMPACT PER SOILS REPORT
3. ADJACENT PAVING (SEE LANDSCAPE CONSTRUCTION PLAN)
4. DG. SEEDED INTEGRAL COLOR CONCRETE PAVING - DG + CONCRETE COLOR TO MATCH ADJACENT, SEE CONSTRUCTION PLANS
5. NOT ASSIGNED
6. NOT ASSIGNED
7. INCOMING IRRIGATION MAINLINE (MAINLINE THROUGH KNOCK-OUTS)
8. IRRIGATION MANIFOLD (SIZE PER PLAN) (LOCATE ON OPPOSITE SIDE OF VAULT HATCH SPRING MECHANISM)
9. IRRIGATION GATE VALVE (SEE IRRIGATION LEGEND
10. REMOTE CONTROL VALVE (SEE IRRIGATION PLANS
11. QUICK COUPLER (SECURE WITH STAINLESS STEEL WORM DRIVE CLAMPS TO 1/2" REBAR STAKE)
12. 3/4" DRAINAGE GRAVEL 6" MIN.

NOTES:
1. CONTRACTOR TO REFER TO LANDSCAPE IRRIGATION PLAN FOR COMPONENT SIZES, MAINLINE, AND LATERAL ROUTING.
2. CONCRETE VAULT & HATCH DOOR LOCATION TO BE APPROVED BY LANDSCAPE ARCHITECT IN FIELD PRIOR TO FINAL BACKFILL AND MANIFOLD CONSTRUCTION.
3. CONTRACTOR SHALL SUBMIT SHOP DRAWINGS FOR REVIEW PRIOR TO PURCHASE.

## 6 NOT ASSIGNED

NOT TO SCALE

## 7 NOT ASSIGNED

No Scale

## 8 IRRIGATION VAULT UNDER PAVING

3/4" = 1'-0"

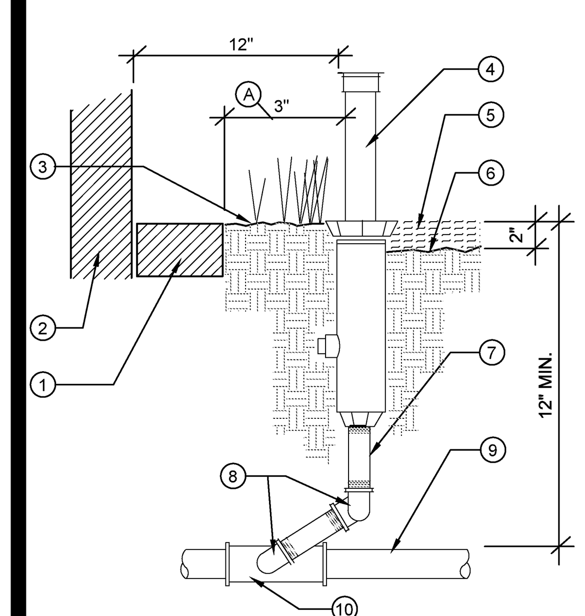


LEGEND:
1. WALK OR CURB
2. BUILDING WALL (WHERE APPLICABLE)
3. FINISH GRADE IN TURF AREAS
4. POP-UP ROTOR HEAD AND NOZZLE
5. MULCH LAYER IN PLANTING AREAS
6. FINISH GRADE IN PLANTING AREAS
7. SCH.80 P.V.C. NIPPLE (2 EACH) SIZE PER HEAD INLET
8. PVC STREET ELL (2 EACH) SIZE PER HEAD INLET
9. P.V.C. LATERAL (PER PLAN)
10. P.V.C. TEE OR ELL (SXSXT)

NOTES:
1. ALL P.V.C. FITTINGS SHALL BE SCH. 40 EXCEPT WHERE NOTED.
2. ALL SCH.80 P.V.C. THREADS SHALL BE WRAPPED WITH TEFLON TAPE. OR RECOMMENDED BY MANUFACTURER

(A) 3" SPRAY DISTANCE
6" ROTOR SPRAY DISTANCE

## 9 POP-UP ROTOR/SPRAY HEAD

No Scale

NOTES:
1. SEE LANDSCAPE PLANTING & CONSTRUCTION PLANS FOR MATERIAL SPECIFICATIONS.
2. SEE CIVIL PLANS FOR FINISH SURFACE ELEVATIONS.

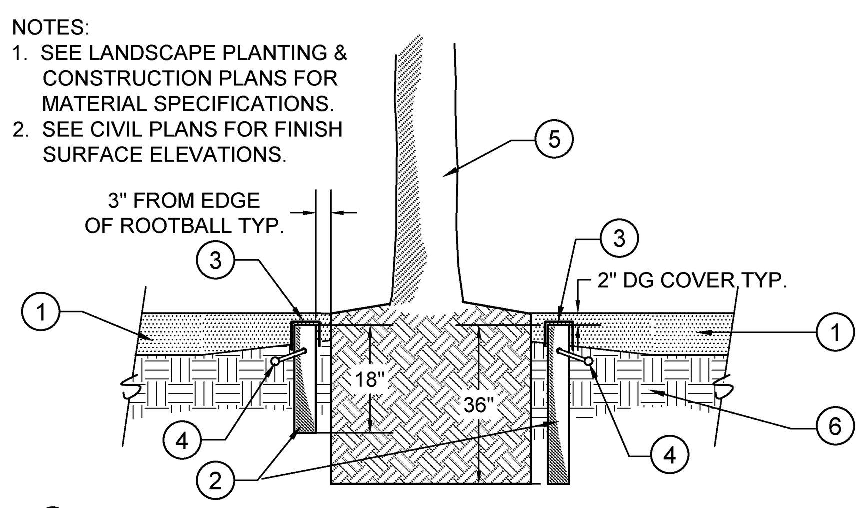


1. DECOMPOSED GRANITE PAVING (SEE LANDSCAPE PLANS)
2. TREE BUBBLER - SEE LANDSCAPE PLANS FOR LOCATION & SPECIFICATION (INSTALL PER SDRSD SDI-104)
3. COVER & SECURE TOP OF TREE BUBBLER GRATE WITH FILTER FABRIC (CONTRACTOR TO SUBMIT SAMPLE FOR APPROVAL BY RESIDENT ENGINEER)
4. IRRIGATION LATERAL LINE (SEE LANDSCAPE PLANS)
5. TREE PER LANDSCAPE PLANTING PLAN
6. SOIL SUBGRADE - COMPACT PER SOILS REPORT

## 10 TREE BUBBLER @ DG PAVING

NTS

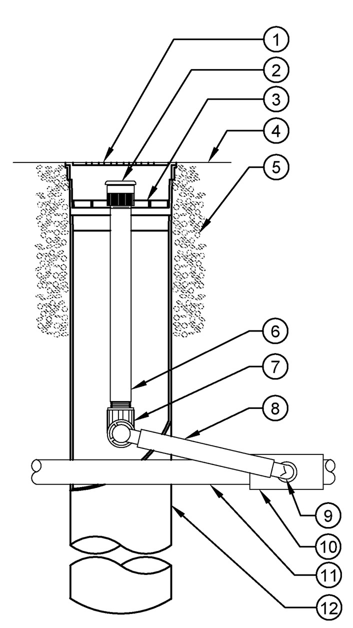

LEGEND:
1. 4-INCH GRATE (INCLUDED)
2. BUBBLER NOZZLE (INCLUDED)
3. ROOT WATERING SYSTEM ASSEMBLY: INCLUDES BUBBLER WITH RISER, GRATE, SWING ASSEMBLY, 1/2" MALE NPT INLET, AND BASKET CANISTER. - SEE IRRIGATION LEGEND AND PLANS FOR MANUFACTURER/ MODEL#
4. FINISH GRADE
5. OPTIONAL PEA GRAVEL OR SAND SOCK FOR SANDY SOILS
6. 1/2-INCH PVC SCH 80 NIPPLE (INCLUDED)
7. 1/2-INCH 90-DEGREE ELBOW (INCLUDED)
8. 12-INCH SWING ASSEMBLY (INCLUDED)
9. 1/2-INCH MALE NPT INLET (INCLUDED)
10. PVC SCH 40 TEE OR EL
11. LATERAL PIPE
12. 4-INCH BASKET WEAVE CANISTER (INCLUDED)

NOTES:
1. SEE IRRIGATION PLANS FOR QUANTITY OF ASSEMBLIES PER TREE (TYP.)
2. DEPTH OF UNIT PER IRRIGATION LEGEND

## 11 DEEP ROOT WATERING SYSTEM

NO SCALE

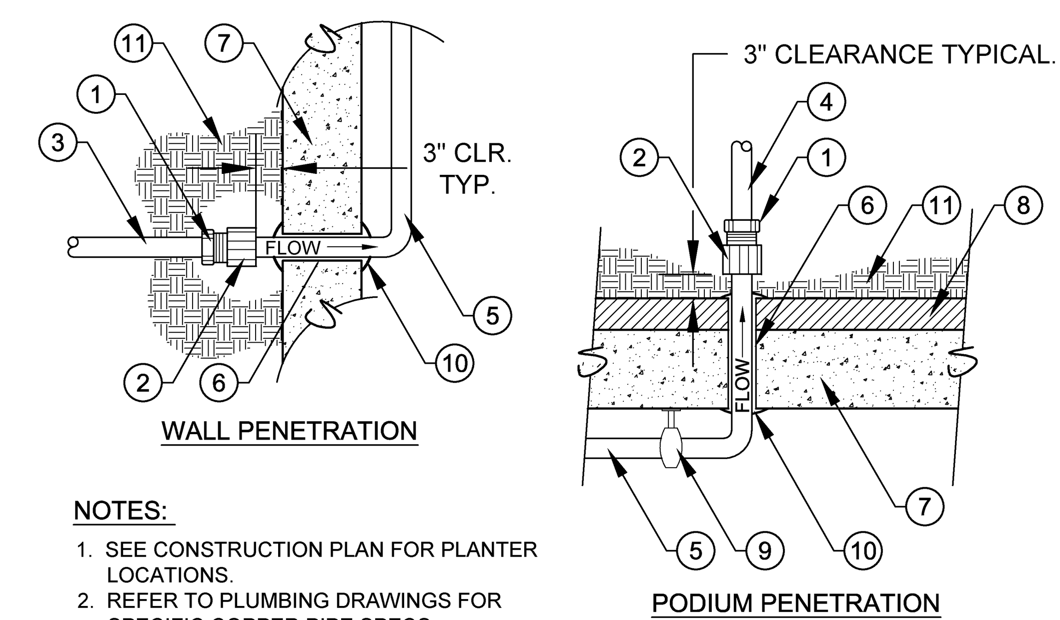


NOTES:
1. SEE CONSTRUCTION PLAN FOR PLANTER LOCATIONS.
2. REFER TO PLUMBING DRAWINGS FOR SPECIFIC COPPER PIPE SPECS.
3. REFER TO CIVIL / STRUCTURAL DRAWINGS FOR IRRIGATION PENETRATIONS THROUGH PODIUM DECK.

1. PVC MALE ADAPTER BY CONTRACTOR (SIZE PER IRRIGATION PIPE SIZE - SEE LANDSCAPE IRRIGATION PLANS)
2. COPPER FEMALE ADAPTER BY CONTRACTOR (SIZE PER IRRIGATION PLAN PIPE SIZE)
3. IRRIGATION PVC PIPE FROM IRRIGATION VALVE - SIZE PER PLAN (SEE LANDSCAPE IRRIGATION PLANS)
4. IRRIGATION PVC TO PLANTER - SIZE PER PLAN (SEE LANDSCAPE IRRIGATION PLANS)
5. COPPER PIPE BY CONTRACTOR (SIZE PER LANDSCAPE IRRIGATION PLANS)
6. STRUCTURAL CONCRETE PODIUM PENETRATION (SEE STRUCTURAL PLANS FOR LOCATION)
7. CONCRETE PODIUM (SEE STRUCTURAL PLANS)
8. WATER PROOFING (SEE SEE WATERPROOFING PLANS)
9. PIPE HANGER BY CONTRACTOR
10. WATERPROOFING / SEALER SEE WATERPROOFING PLANS
11. PLANTER SOIL BACKFILL

## 12 IRRIGATION PIPE PODIUM PENETRATION

NTS

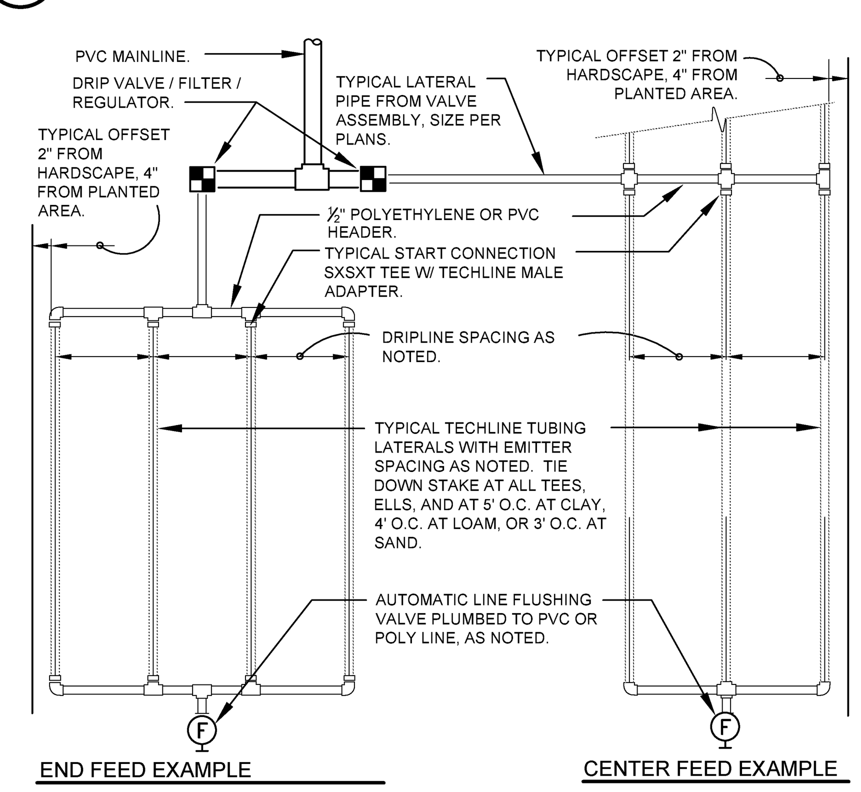


TECHLINE CV MAXIMUM LENGTH OF SINGLE LATERAL (FEET)

| DRIPPER SPACING | | 12" | | | | 18" | | | | 24" | |
|---|---|---|---|---|---|---|---|---|---|---|---|
| DRIPPER FLOW RATE (GPH) | | 0.26 | 0.4 | 0.6 | 0.9 | 0.26 | 0.4 | 0.6 | 0.9 | 0.6 | 0.9 |
| INLET PRESSURE (PSI) | 15 | 127 | 109 | 86 | 65 | 177 | 151 | 120 | 91 | 152 | 116 |
| | 25 | 427 | 325 | 256 | 194 | 604 | 459 | 361 | 274 | 458 | 348 |
| | 35 | 539 | 409 | 322 | 244 | 763 | 579 | 456 | 346 | 580 | 440 |
| | 45 | 618 | 469 | 369 | 280 | 877 | 664 | 523 | 397 | 666 | 506 |

TECHLINE CV FLOW PER 100 FEET

| DRIPPER SPACING | 0.26 GPH DRIPPER | | 0.4 GPH DRIPPER | | 0.6 GPH DRIPPER | | 0.9 GPH DRIPPER | |
|---|---|---|---|---|---|---|---|---|
| | GPH | GPM | GPH | GPM | GPH | GPM | GPH | GPM |
| 12" | 26.40 | 0.44 | 40.00 | 0.67 | 61.00 | 1.02 | 92.00 | 1.53 |
| 18" | 17.58 | 0.29 | 26.67 | 0.44 | 41.00 | 0.68 | 61.00 | 1.02 |
| 24" | N/A | N/A | N/A | N/A | 31.00 | 0.51 | 46.00 | 0.77 |

WATER SOURCE: DRIP VALVE OR LATERAL FROM VALVE.
TYPICAL SUPPLY HEADER.
(F) AUTOMATIC LINE FLUSH VALVE PLUMBED TO PVC OR POLY.
TYPICAL TECHLINE DRIPPER LINE TUBING TO BE BURIED 4" BELOW FINISH GRADE IN LANDSCAPE AREAS (1" BELOW FINISH GRADE IN PLANTER POTS).
TYPICAL PVC OR POLY SUPPLY OR EXHAUST HEADER TO BE BURRIED MIN 12" BELOW GRADE.

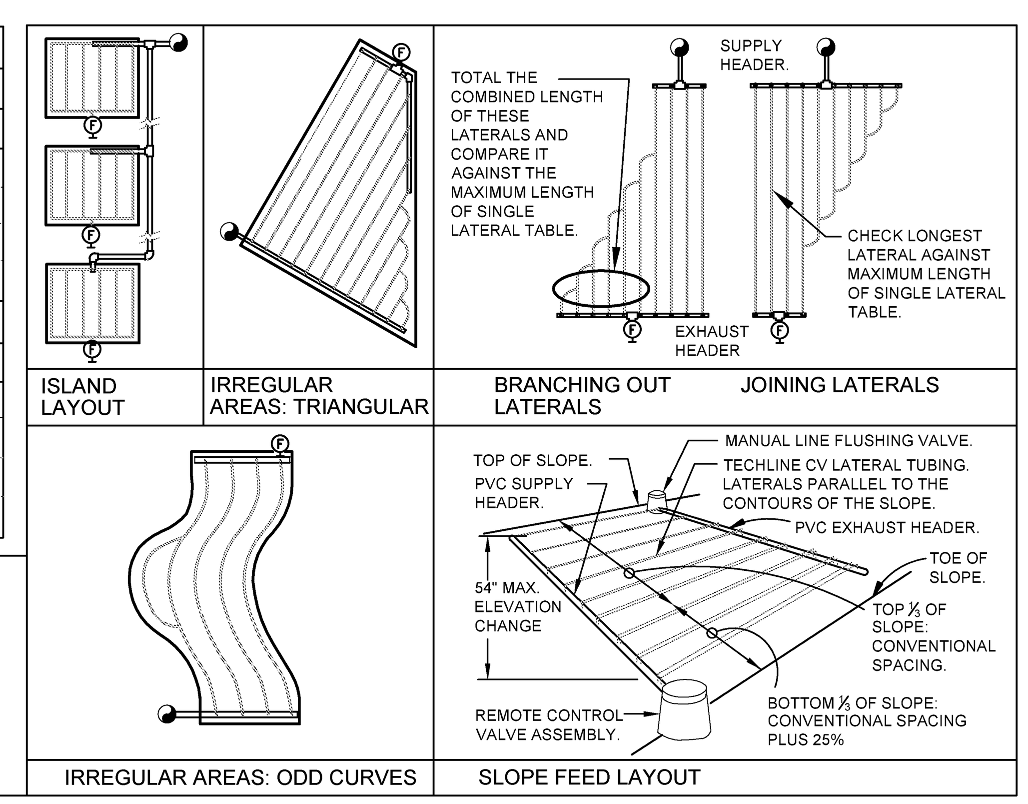


## 13 TYPICAL DRIPLINE REQUIREMENTS

NO SCALE

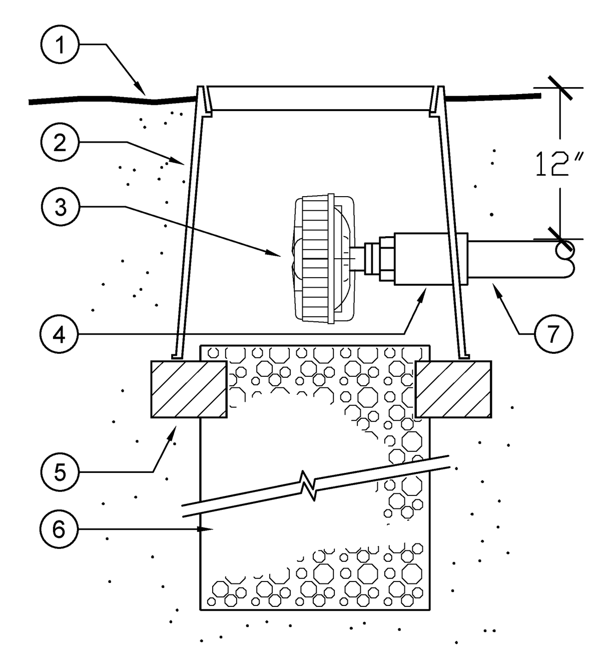


1. FINISH GRADE
2. VALVE BOX, PER SPECIFICATIONS
3. AUTOMATIC LINE FLUSHING VALVE
4. PRC REDUCER ADAPTER S X 1/2" FPT (SIZE AS REQ'D)
5. BRICK SUPPORTS (THREE)
6. 3/4" GRAVEL SUMP; 1 CUBIC FOOT
7. PVC LATERAL OR EXHAUST HEADER

## 14 AUTOMATIC FLUSH VALVE

NO SCALE

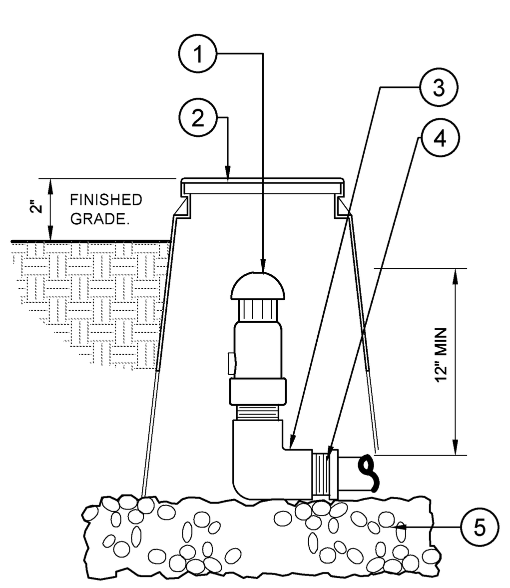


LEGEND:
1. AIR RELIEF VALVE AS SPECIFIED.
2. 6" DRIP BOX
3. 1" FPTXMPT ELL.
4. 3/4"X1"MPT ADAPTER.
5. 3" THICK LAYER OF WASHED GRAVEL. THE BOX SHALL REST UPON THE ROCK BED. DO NOT EXTEND GRAVEL INTO BOX.

## 15 DRIP AIR RELIEF VALVE IN BOX PVC LATERAL

NO TO SCALE

IPD, Inc.

**County of San Diego**
**Cedar & Kettner**
**Development Project**
San Diego, California

MCCARTHY
20401 S.W. BIRCH STREET SUITE 300
Newport Beach, California 92660

Alameda
Irvine
Los Angeles
IPD
Architecture / Engineering / Consulting
www.ipd-global.com
2 Faraday, Suite 101, Irvine CA 92618
Phone 949 595 8004 Fax 949 595 8011

SCHMIDT DESIGN GROUP, INC.
BALANCING ARTISTIC EXPRESSION IN DESIGN WITH ENVIRONMENTAL SENSITIVITY
2655 Fourth Avenue, San Diego, CA 92103
telephone {619} 236-1462 facsimile {619} 236-8792
www.schmidtdesign.com
Lic. CA 2138, NV 219, AZ 34139

LICENSED LANDSCAPE ARCHITECT
JEFF J. JUSTUS
NOT FOR CONSTRUCTION
-31-15
RENEWAL DATE
DATE
STATE OF CALIFORNIA

| Revision | Date |
|---|---|
| 100% DESIGN DEVELOPMENT | 10/23/13 |
| 90% CDs - 1ST PLAN CHECK | 12/24/13 |
| 2ND PLAN CHECK | 04/23/13 |

| | |
|---|---|
| Date | 04.23.2014 |
| SDG Job No. | 13-100 |
| Drawn By | NL |
| Checked By | JJ |
| Scale | |

CONSTRUCTION DOCUMENTS

Drawing Title
LANDSCAPE IRRIGATION DETAILS

Drawing No.
LI-2.0

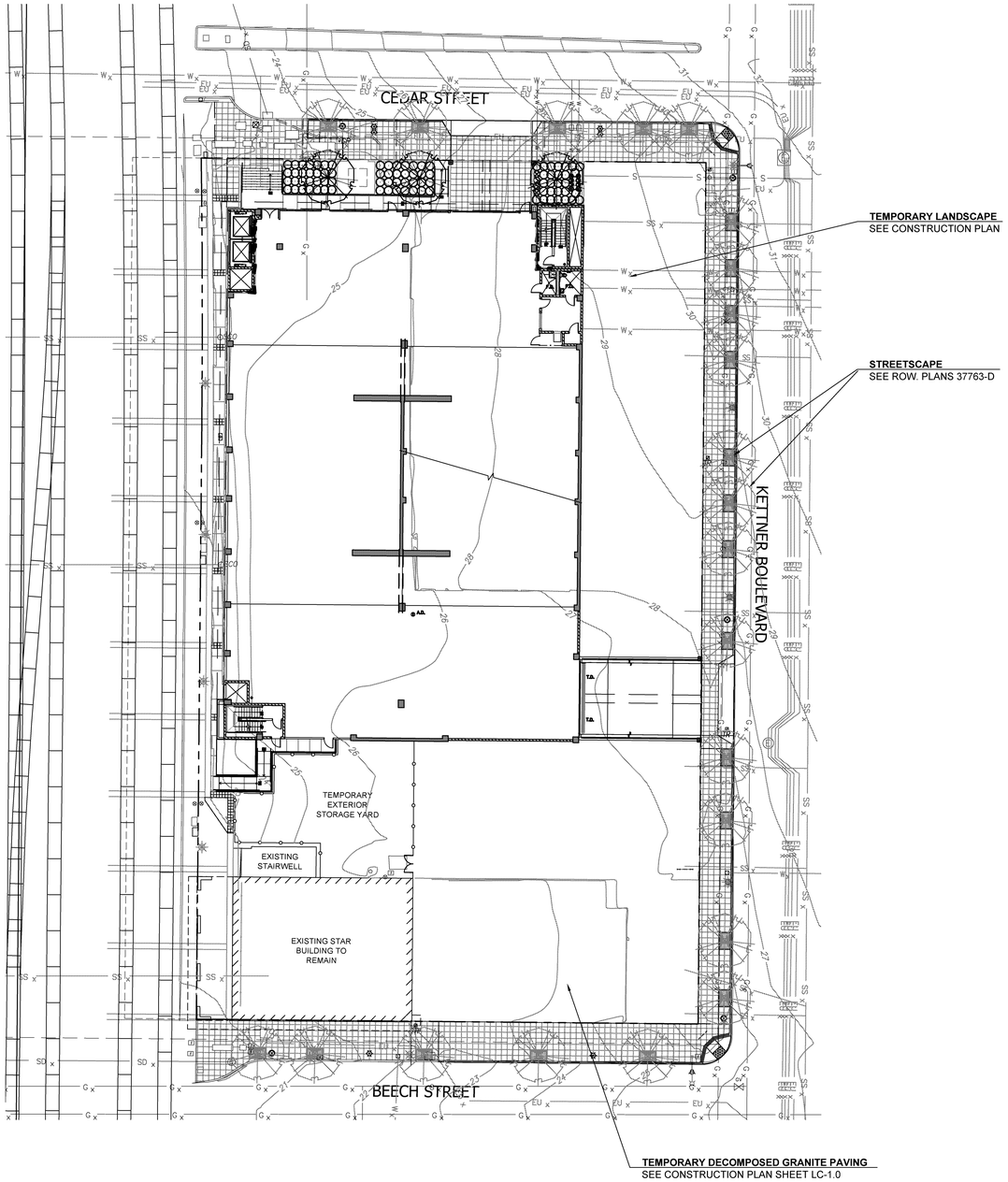


**CONTRACTOR REPAIR / REPLACE NOTE**:
UNLESS OTHERWISE NOTED, IT IS THE RESPONSIBILITY OF THE CONTRACTOR TO REPAIR AND OR REPLACE ANY DAMAGED IRRIGATION / PLANT MATERIAL WHICH IS TO BE BE PROTECTED IN PLACE DURING THE CONSTRUCTION PROCESS. REPLACEMENT WILL REQUIRE EXACT MATCH OF DAMAGED COMPONENT / PLANT MATERIAL OR EQUAL TO BE APPROVED BY THE LANDSCAPE ARCHITECT PRIOR TO REINSTALLATION .

PLANT SCHEDULE

| TREES | BOTANICAL NAME | COMMON NAME | CONT | QTY | DETAIL |
|---|---|---|---|---|---|
| | JACARANDA MIMOSIFOLIA | JACARANDA | 36" BOX | 3 | 1 / LP-2.0 |

| SHRUBS | BOTANICAL NAME | COMMON NAME | CONT | QTY | DETAIL |
|---|---|---|---|---|---|
| | ASTELIA CHATHAMICA `SILVER SHADOW' | SILVER SHADOW ASTELIA | 5 GALLON | 84 | 2 / LP-2.0 |

PLANTING NOTES:

1. FINISHED GRADES SHALL BE SMOOTHED TO ELIMINATE PUDDLING OR STANDING WATER. CONTRACTOR SHALL MAINTAIN A MINIMUM 1.5% DRAINAGE AWAY FROM BUILDINGS AND PAVING INTO DRAINAGE STRUCTURES OR TO STREET (SEE ENGINEERS GRADING AND DRAINAGE PLAN). CONTRACTOR SHALL NOTIFY LANDSCAPE ARCHITECT IMMEDIATELY OF ANY CONFLICTS IN MAINTAINING DRAINAGE.
2. LANDSCAPE ARCHITECT SHALL APPROVE ALL FINISH GRADING PRIOR TO PLACEMENT OF ANY PLANT MATERIAL.
3. CONTRACTOR SHALL IMMEDIATELY, UPON THE AWARD OF THE CONTRACT, ORDER, LOCATE AND PURCHASE (OR HAVE HELD) ALL PLANT MATERIAL REQUIRED BY THESE PLANS AND SPECIFICATIONS.
4. CONTRACTOR SHALL NOTIFY LANDSCAPE ARCHITECT FOR OBSERVATION AT THE FOLLOWING TIMES:
   --MAINLINE - PRIOR TO BACKFILL AND PRESSURE TEST
   --LATERAL LINES - PRIOR TO BACKFILL
   --CONTROL WIRES - PRIOR TO BACKFILL
   --TREE LOCATIONS - PRIOR TO PLANTING
   --IRRIGATION COVERAGE - PRIOR TO PLANT PLACEMENT
   --PLANT APPROVAL AND SPOTTING PRIOR TO PLANTING
   --PRE-MAINTENANCE APPROVAL
   --POST-MAINTENANCE/FINAL APPROVAL.
5. SOIL AMENDMENTS SPECIFIED ARE FOR BIDDING PURPOSES ONLY. ACTUAL TYPES AND QUANTITIES WILL BE BASED ON SOIL ANALYSIS PROVIDED BY CONTRACTOR. AFTER ROUGH GRADING, SOIL SAMPLES SHALL BE TAKEN FROM ENOUGH LOCATIONS IN DIFFERENT AREAS OF THE SITE TO REPRESENT AN ADEQUATE CROSS SECTION OF CONDITIONS. TEST SHALL INCLUDE TESTS FOR SOIL FERTILITY, AGRICULTURAL SUITABILITY ORGANIC CONTENT N, P, K; PH; EC; SOIL TEXTURE; AND RECOMMENDATIONS FOR AMENDMENTS, LEACHING, AND MAINTENANCE FERTILIZATION. CONTRACTOR SHALL FURNISH OWNER'S REPRESENTATIVE WITH A COPY OF TEST RESULTS AND RECEIVE WRITTEN APPROVAL FOR AMENDMENTS/SOIL PREPARATION PRIOR TO INSTALLATION.
   **BID MIX FOR TURF AREAS:**
   SOIL AMENDMENTS BID MIX SHALL BE THE FOLLOWING PER 1000 SQUARE FEET:
   - 4 CU. YDS. NITROGEN STABILIZED ORGANIC AMENDMENT 'KELLOG NITRO MULCH'
   - 20 LBS. GRO-POWER PLUS
   - 100 LBS. GYPSUM
   "SOIL PREP" TO BE MIXED INTO THE TOP 6" OF SOIL THROUGHOUT THE SITE EXCEPT ON SLOPES GREATER THAN 3:1.
   **BID MIX FOR SHRUB AREAS:**
   PLANTING AND BACKFILL MIX FOR PLANT PITS AND TABLETS SHALL BE AS FOLLOWS PER CUBIC YARD:
   - 70% OF NATIVE SOIL
   - 30% NITROGEN STABILIZED ORGANIC AMENDMENT
   - 16 LBS GRO-POWER PLUS
   - 2 LBS. FERROUS SULFATE
   THOROUGHLY BLEND THE ABOVE AT A CENTRAL ON-SITE LOCATION PRIOR TO USE. THE FERROUS SULFATE SHOULD NOT CONTACT PAVING SURFACES AS STAINING WILL RESULT.
6. SEE PLANTING SPECIFICATIONS FOR PRE-EMERGENT TREATMENT OF SOIL.
7. SHRUB AND GROUNDCOVER MASS QUANTITIES ARE SHOWN ON PLANS. PLANTS SHALL BE INSTALLED WITH TRIANGULAR SPACING.
8. PLANT SYMBOLS TAKE PRECEDENCE OVER PLANT QUANTITIES SPECIFIED. CONTRACTOR SHALL VERIFY PLANT TOTALS FOR BID PURPOSES.
9. PRIOR TO BEGINNING THE PLANTING OPERATION, IRRIGATE ALL PLANTING AREAS NORMALLY FOR TWO WEEKS TO GERMINATE WEEDS. APPLY CONTACT HERBICIDE TO WEEDS ONLY PER MANUFACTURER, MONSANTO "ROUND-UP" OR EQUAL. REPEAT PROCESS IF WEEDS PERSIST.
10. PRIOR TO PLANTING, IRRIGATION SYSTEM SHALL BE FULLY OPERATIONAL AND ALL PLANTING AREAS SHALL BE THOROUGHLY WATERED.
11. PLANT MATERIAL MAY BE REJECTED AT ANY TIME BY LANDSCAPE ARCHITECT DUE TO CONDITION, FORM OR DAMAGE BEFORE OR AFTER PLANTING.
12. ALL TREES WITHIN 10' OR LESS OF HARDSCAPE SHALL BE INSTALLED WITH A ROOT BARRIER. ROOT BARRIER SHALL BE INSTALLED PARALLEL TO HARDSCAPE SURFACE FOR A DISTANCE OF 10' FROM THE CENTER LINE OF THE TREE TRUNK IN BOTH DIRECTIONS, OR AS INDICATED ON PLAN. ROOT BARRIER TO BE MANUFACTURED BY "DEEPROOT" OR EQUIVALENT.
13. PLANTING TABLETS SHALL BE GRO-POWER PLANTING TABLETS 12-8-8 (12 MONTH SLOW RELEASE FORMULATION).
14. ALL PLANTING BEDS SHALL HAVE 2" (TWO INCH) THICK MULCH LAYER. "MULCH" SHALL BE 'PERENNIAL MULCH' FROM AGRISERVICE OR APPROVED EQUAL. PH.(800) 262-4167. RATES AS SPECIFIED ON PLANS, FREE OF STICKS, STONES, CLAY OR OTHER FOREIGN MATERIAL. CONTRACTOR SHALL SUBMIT SAMPLE TO LANDSCAPE ARCHITECT FOR APPROVAL PRIOR TO INSTALLATION.
15. AT COMPLETION OF THE ESTABLISHMENT PERIOD, APPLY COMMERCIAL FERTILIZER (15-15-15) AT 2LBS/1000SF TO TURF AREAS ONLY AND WATER IMMEDIATELY WITH A THOROUGH IRRIGATION CYCLE.
16. CONTRACTOR IS RESPONSIBLE FOR MAINTAINING ALL AREAS IN A WEED AND DEBRIS-FREE CONDITION THROUGHOUT THE ESTABLISHMENT PERIOD.
17. COORDINATE PLACEMENT OF TREES WITH SITE LIGHTING. CANOPY OF TREE AT ULTIMATE SIZE SHALL NOT BE PLACED SO AS TO CONFLICT WITH LIGHTING THROW ALONG WALKWAYS.
18. PLANT MATERIAL SHALL BE GROWN UNDER CLIMATIC CONDITIONS SIMILAR TO THOSE OF THE PROJECT SITE.

**LANDSCAPE SHEET LEGEND**:
LANDSCAPE CONSTRUCTION PLAN, LEGEND, NOTES - SHEET LC-1.0
LANDSCAPE CONSTRUCTION DETAILS - SHEET LC-2.0
LANDSCAPE IRRIGATION PLAN, LEGEND, NOTES - SHEET LI-1.0
LANDSCAPE CONSTRUCTION DETAILS - SHEET LI-2.0
LANDSCAPE PLANTING PLAN, LEGEND, NOTES - SHEET LP-1.0
LANDSCAPE PLANTING DETAILS - SHEET LP-2.0

0 10 20 40
Plan Graphic Scale: 1" = 20'-0"

**County of San Diego**
**Cedar & Kettner**
**Development Project**
San Diego, California

McCARTHY
20401 S.W. BIRCH STREET SUITE 300
Newport Beach, California 92660

IPD
Alameda
Irvine
Los Angeles
Architecture / Engineering / Consulting
www.ipd-global.com
2 Faraday, Suite 101, Irvine CA 92618
Phone 949 595 8004 Fax 949 595 8011

SCHMIDT DESIGN GROUP, INC.
BALANCING ARTISTIC EXPRESSION IN DESIGN WITH ENVIRONMENTAL SENSITIVITY
2655 Fourth Avenue, San Diego, CA 92103
telephone (619) 236-1462 facsimile (619) 236-8792
www.schmidtdesign.com
LIC. CA 2138, NV 219, AZ 34139

LICENSED LANDSCAPE ARCHITECT
JEFF M. JUSTUS No. 4227
NOT FOR CONSTRUCTION
12-31-15
RENEWAL DATE
DATE
STATE OF CALIFORNIA

| Revision | Date |
|---|---|
| 100% DESIGN DEVELOPMENT | 10/23/13 |
| 90% CDs - 1ST PLAN CHECK | 12/24/13 |
| 2ND PLAN CHECK | 04/23/13 |

| | |
|---|---|
| Date | 04.23.2014 |
| SDG Job No. | 13-100 |
| Drawn By | NL |
| Checked By | JJ |
| Scale | 1" = 20'-0" |

CONSTRUCTION DOCUMENTS

Drawing Title
LANDSCAPE PLANTING PLAN, LEGEND + NOTES

Drawing No.
LP-1.0

IPD, Inc.

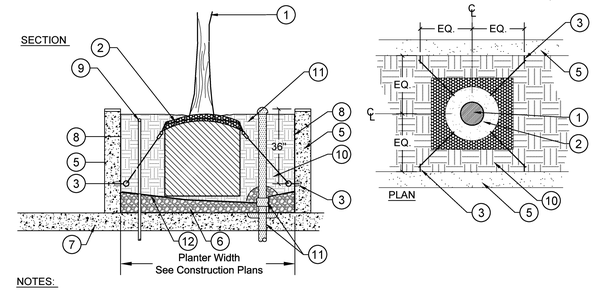


NOTES:

1. SEE CONSTRUCTION PLAN FOR WALL LOCATIONS.
2. REFER TO PLUMBING DRAWINGS FOR SPECIFIC DRAIN AND PIPE SPECS.
3. REFER TO CIVIL DRAWINGS FOR DRAIN LOCATIONS AND SLOPE OF CONCRETE.
4. PENETRATIONS PLANTER TO ALLOW FOR IRRIGATION & DRAINAGE LINES MUST BE SEALED SO AS NOT TO ALLOW FOR ROOT OR WATER TO SEEP THROUGH. COORDINATE WITH WATERPROOFING PLANS.
5. TREE ANCHORING SYSTEM THROUGH PLATIPUS ANCHORS, INC. PH: (866) 622-2283. www.platipus-anchors.us, OR APPROVED EQUAL.

1. TREE / PALM TREE (SEE LANDSCAPE PLANTING PLANS FOR LOCATION AND SIZE)
2. MODIFIED TREE ANCHORING SYSTEM BY PLATIPUS ANCHOR SYSTEMS WITH GALVANIZED WIRE & ANCHORS - SEE NOTES. INSTALL PER MANUFACTURER RECOMMENDATIONS.
3. 1" DIA. STAINLESS STEEL EYELET EPOXY SET IN TO CONCRETE WALL
4. NOT ASSIGNED
5. RAISED CONCRETE PLANTER OVER PODIUM (SEE ARCHITECTURAL PLANS)
6. 4" THK. 3/4" DRAINAGE GRAVEL
7. STRUCTURAL PODIUM SLAB (SEE STRUCTURAL PLANS)
8. WATER PROOFING, DRAINAGE BOARD, (SEE WATER PROOFING PLANS)
9. IRRIGATION LATERAL LINE
10. LIGHTWEIGHT PLANTER MIX FROM A-1 SOILS, 1-858-715-5600
11. AREA DRAIN (SEE PLUMBING PLANS)
12. WOVEN FILTER FABRIC

## 1 TREE PLANTING IN RAISED CMU PLANTER OVER PODIUM

NOT TO SCALE

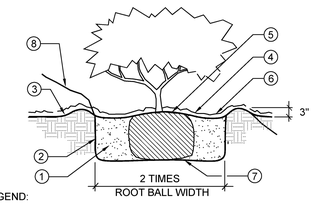


LEGEND:

1. PLANTING BACKFILL PER NOTES AND SPECIFICATIONS.
2. ROUGHEN SIDES AND BOTTOM OF PIT.
3. FINISHED GRADE.
4. (2) INCH MULCH LAYER
5. ROOTBALL SLIGHTLY HIGHER THAN FINISHED GRADE.
6. WATER BASIN.
7. ROOT BALL RESTING ON FIRM SOIL TO AVOID SETTLING.
8. FOR SLOPE CONDITIONS CHAMFER SLOPE TO PREVENT EROSION.

NOTE:

A. KEEP MULCH 2-3" FROM TRUNK OF TREE OR SHRUB TYP.

## 2 SHRUB PLANTING

NTS

County of San Diego
Cedar & Kettner
Development Project
San Diego, California

McCARTHY
20401 S.W. BIRCH STREET SUITE 300
Newport Beach, California 92660

IPD
Alameda
Irvine
Los Angeles
Architecture / Engineering / Consulting
www.ipd-global.com
2 Faraday, Suite 101, Irvine CA 92618
Phone 949 595 8004 Fax 949 595 8011

SCHMIDT DESIGN GROUP, INC.
BALANCING ARTISTIC EXPRESSION IN DESIGN WITH ENVIRONMENTAL SENSITIVITY
2655 Fourth Avenue, San Diego, CA 92103
telephone (619) 236-1462 facsimile (619) 236-8792
www.schmidtdesign.com
Lic. CA 2138, NV 219, AZ 34139

LICENSED LANDSCAPE ARCHITECT
JEFF J. JUSTUS No. 5
NOT FOR CONSTRUCTION
LIFE
5-31-15
RENEWAL DATE
DATE
STATE OF CALIFORNIA

| Revision | Date |
|---|---|
| 100% DESIGN DEVELOPMENT | 10/23/13 |
| 90% CDs - 1ST PLAN CHECK | 12/24/13 |
| 2ND PLAN CHECK | 04/23/13 |

| | |
|---|---|
| Date | 04.23.2014 |
| SDG Job No. | 13-100 |
| Drawn By | NL |
| Checked By | JJ |
| Scale | |

CONSTRUCTION DOCUMENTS

Drawing Title
LANDSCAPE PLANTING DETAILS

Drawing No.
LP-2.0

IPD, Inc.

NOTES - GENERAL AND PLUMBING CONTRACTORS

The General Contractor shall provide all platforms for the Mechanical equipment.

The General Contractor shall provide code approved roof access.

The General Contractor shall provide the necessary cutting, patching, furring, flashing and final painting.

The General Contractor shall remove all obstructions to the passage of ductwork and equipment.

All roof opening dimensions are finished dimensions. The General Contractor shall cut openings to accommodate framing material.

The Plumbing Contractor shall provide all condensate piping including final connections to HVAC units.

The Plumbing Contractor shall not run any piping including condensate piping in such a manner as to prevent removal of service panels or filters or reading of data plates or tags.

The general contractor shall insure that all finished openings for ductwork penetrating rated walls and not requiring fire dampers shall be within 1/4" per side of the ductwork.

The general contractor shall insure that all finished openings for insulated piping penetrating rated walls shall be within 3/8" per side of the piping.

NOTES - ELECTRICAL

- - - - - Low Voltage Wiring

——— Line Voltage Wiring

(E) Items furnished, installed and wired by the Electrical Contractor.

(M) Items furnished and installed by the Mechanical Contractor.

(M/E) Items furnished by the Mechanical Contractor, wired and installed by the Electrical Contractor.

The Electrical Contractor to furnish and install line voltage conduit and wiring and low voltage conduit.

Thermostats and humidistats shall be located four foot, zero inches (4'-0") above the finished floor or at the same height of adjacent electrical switches.

Refer to Manufacturer's Manual for recommended fuse and wire size.

Except as noted, all switches, magnetic starters, and contactors not an integral part of the air conditioning equipment are to be furnished and installed by the Electrical Contractor.

The Electrical Contractor is to make connections to devices for the automatic control of the heating, ventilating, and air conditioning, and exhaust system including automatic valves and components which are a part of the air conditioning piping systems.

All final connections to the equipment are to be of flexible weatherproof conduit to meet uniform building codes.

The Electrical Contractor shall not place switches, disconnects, or conduit runs in such a manner as to prevent removal of service panels or filters or reading of data plates or tags.

Automatic clocks and bypass timers shall be located as to conform to job conditions.

NOTES - DUCTWORK

Duct dimensions are net internal, except as noted line (L).

All lined (L) duct dimensions are sheet metal dimensions (O.D.)

All supply and return air ductwork exposed to weather shall be lined with one and one-half inch (2") fiberglass insulation on to R-8 for Ext. Ducts.

All concealed supply and return air ductwork to be pre-insulated alumaflex wrapped with minimum one inch (1") fiberglass insulation, minimum one and one-half pound (1 1/2#) density, on all sides unless noted lined (L), min 4.2 with joints to be sealed as required (U.N.O.).

All concealed supply and return air ductwork noted line (L), shall be lined with one inch (1") fiberglass insulation on all sides.

The locations of all grilles and registers shall be coordinated with the Architectural drawings.

The locations of all penetrations shall be coordinated with the Architectural and/or structural drawings.

All supply and return air ductwork shall be sealed with glencote or approved sealant at all exterior seams.

Vertical duct from unit to first 90° elbow at bottom to be pre-insulated galvanized spiral duct.

NOTES - MISCELLANEOUS

All work and equipment shall conform with the latest applicable codes.

All field conditions and job site dimensions are to be verified prior to the commencement of work.

All work shall be coordinated with other trades.

Approved isolation for equipment shall be installed in accordance with applicable manufacturer's recommendation.

Maintenance label will be affixed to mechanical equipment and a tag.ntenance manual shall be provided for the owners use.

All manual volume dampers (M.V.D.) shall be provided with a red

Manual volume dampers (M.V.D.) handles shall be located on the underside of ducts for easy access.

Approved fire dampers (A.F.D.) shall be installed in accordance with all state and/or local codes.

Corridors shall not be used to convey air to or from rooms if the corridor is required to be of fire-resistive construction.

**2010 Cal Green HVAC Related Mandatory Measures**

**Section 5.504 Pollutant Control**

5.504.3 Covering of duct openings and protection of mechanical equipment during construction. At the time of rough installation, or during storage on the construction site and until final startup of the heating and cooling equipment, all duct and other related air distribution component openings shall be covered with tape, plastic, sheet metal or other methods acceptable to the enforcing agency to reduce the amount of dust or debris which may collect in the system.

**5.504.4 Finish material pollutant control.**

5.504.4.1 Adhesives, sealants and caulks. Adhesives, sealants, and caulks used on the project shall meet the requirements of the following standards:

1. Adhesives, adhesive bonding primers adhesive primers, sealants, sealant primers and caulks shall comply with local or regional air pollution control or air quality management district rules where applicable, or SCAQMD Rule 1168 VOC limits, as shown in Tables 5.504.4.1 and 5.504.4.2. Such products also shall comply with the Rule 1168 prohibition on the use of certain toxic compounds (chloroform, ethylene dichloride, methylene chloride, perchloroethylene and trichloroethylene), except for aerosol products as specified in subsection 2, below.

2. Aerosol adhesives, and smaller unit sizes of adhesives, and sealant or caulking compounds (in units of product, less packaging, which do not weigh more than one pound and do not consist of more than 16 fluid ounces) shall comply with statewide VOC standards and other requirements, including prohibitions on use of certain toxic compounds, of California Code of Regulations, Title 17, commencing with Section 94507.

**5.504.5.3 Filters**. In mechanically ventilated buildings, provide regularly occupied areas of the building with air filtration media for outside and return air prior to occupancy that provides at least a Minimum Efficiency Reporting Value (MERV) of 8.

SECTION 5.506 INDOOR AIR QUALITY

5.506.1 Outside air delivery. For mechanically or naturally ventilated spaces in buildings, meet the minimum requirements of Section 121 (Requirements For Ventilation) of the California Energy Code, CCR, Title 24, Part 6, or the applicable local code, whichever is more stringent, and Chapter 4 of CCR, Title 8.

5.506.2 Carbon dioxide (CO2) monitoring. For buildings equipped with demand control ventilation, CO2 sensors and ventilation controls shall be specified and installed in accordance with the requirements of the current edition of the California Energy Code, CCR, Title 24, Part 6, Section 121(c).

SECTION 5.508 OUTDOOR AIR QUALITY

5.508.1 Ozone depletion and greenhouse gas reductions. Installations of HVAC, refrigeration and fire suppression equipment shall comply with Sections 5.508.1.1 and 5.508.1.2.

5.508.1.1 Chlorofluorocarbons (CFCs). Install HVAC, refrigeration and fire suppression equipment that do not contain CFCs.

5.508.1.2 Halons. Install HVAC, refrigeration and fire suppression equipment that do not contain Halons.

The COSTAR CO sensor provides a single pole dry contact relay for fan control. For maximum safety, connect the COSTAR VC directly to a normally closed (N.C.) fan contactor. In clean air, the relay contact K1-K2 is closed and the fans are OFF. When a CO level greater than 25 or 35 PPM is detected, or if a circuit failure occurs, the relay contact is opened and the fans are turned ON. Once turned ON, the fans will run until the COSTAR VC senses the CO level has fallen below 25 or 35 PPM, or the circuit fault is corrected. To eliminate short cycling, minimum fan cycle time is 2.5 minutes.

See floor plans (sheets M2-1 & M2-2) for exact locations of Costar CO sensors.

See wiring/control plans (sheets M0-2 & M0-3) for wiring of CO system.

**EXHAUST FAN SCHEDULE**

| TYPE | MARK | MANUFACTURER | Model | CFM | E.S.P. | FAN TYPE | DRIVE TYPE | FRPM | Voltage | H.P. | WEIGHT | LOCATION | COMMENTS |
|---|---|---|---|---|---|---|---|---|---|---|---|---|---|
| EF | B1-1 | GREENHECK | SBE-3H30--30 | 9,000 | 0.75 | SIDEWALL PROP | BELT | 1196 | 460/3/60 | 3 | 310 | LEVEL B-1 | W/ WALL MOUNT SLEEVE, 39"X39" WALL OPENING, & OSHA GUARD / SHUTTER |
| EF | B1-2 | GREENHECK | SBE-3H30--30 | 9,000 | 0.75 | SIDEWALL PROP | BELT | 1196 | 460/3/60 | 3 | 310 | LEVEL B-1 | W/ WALL MOUNT SLEEVE, 39"X39" WALL OPENING, & OSHA GUARD / SHUTTER |
| EF | B1-3 | GREENHECK | SE1-14-440-B6 | 800 | 0.30 | SIDEWALL PROP | DIRECT | 1160 | 115/1/60 | 1/6 | 30 | LEVEL B-1 | W/ WALL MOUNT SLEEVE, 21.5"x21.5" WALL OPENING, & OSHA GUARD |
| EF | B2-1 | GREENHECK | SBE-3H30--30 | 9,000 | 0.75 | SIDEWALL PROP | BELT | 1196 | 460/3/60 | 3 | 310 | LEVEL B-2 | W/ WALL MOUNT SLEEVE & INTERLOCK WITH SF B2-1, 39"X39" WALL OPENING, OSHA GUARD / SHUTTER |
| EF | B2-2 | GREENHECK | SBE-3H30--30 | 9,000 | 0.75 | SIDEWALL PROP | BELT | 1196 | 460/3/60 | 3 | 310 | LEVEL B-2 | W/ WALL MOUNT SLEEVE & INTERLOCK WITH SF B2-2, 39"X39" WALL OPENING, OSHA GUARD / SHUTTER |
| EF | B2-3 | GREENHECK | SE1-14-440-B6 | 800 | 0.30 | SIDEWALL PROP | DIRECT | 1160 | 115/1/60 | 1/6 | 30 | LEVEL B-2 | W/ WALL MOUNT SLEEVE, 21.5"x21.5" WALL OPENING, & OSHA GUARD |
| EF | B3-1 | GREENHECK | SBE-3H30-20 | 6,000 | 0.75 | SIDEWALL PROP | BELT | 1076 | 460/3/60 | 2 | 300 | LEVEL B-3 | W/ WALL MOUNT SLEEVE & INTERLOCK WITH SF B3-1, 39"X39" WALL OPENING, OSHA GUARD / SHUTTER |
| EF | B3-2 | GREENHECK | SBE-3H30-20 | 6,000 | 0.75 | SIDEWALL PROP | BELT | 1076 | 460/3/60 | 2 | 300 | LEVEL B-3 | W/ WALL MOUNT SLEEVE & INTERLOCK WITH SF B3-2, 39"X39" WALL OPENING, OSHA GUARD / SHUTTER |
| EF | P1-1 | GREENHECK | SP-A50 | 50 | 0.70 | CEILING | DIRECT | 700 | 115/1/60 | 18WATTS | 15 | LEVEL P-1 | ELECTRICAL CONT TO INTERCONNECT FAN WITH LIGHT SWITCH |
| EF | P1-2 | GREENHECK | SP-A50 | 50 | 0.70 | CEILING | DIRECT | 700 | 115/1/60 | 18WATTS | 15 | LEVEL P-1 | ELECTRICAL CONT TO INTERCONNECT FAN WITH LIGHT SWITCH |
| EF | P6-1 | GREENHECK | SE1-12-426-D | 800 | 0.15 | SIDEWALL PROP | DIRECT | 1550 | 115/1/60 | 1/10 | 30 | LEVEL P-6 | W/ WALL MOUNT SLEEVE, 19.25"x19.25" WALL OPENING, & OSHA GUARD |

**SUPPLY FAN SCHEDULE**

| TYPE | MARK | MANUFACTURER | Model | CFM | E.S.P. | FAN TYPE | DRIVE TYPE | FRPM | Voltage | H.P. | WEIGHT | LOCATION | COMMENTS |
|---|---|---|---|---|---|---|---|---|---|---|---|---|---|
| SF | B2-1 | GREENHECK | SBS-3H30--30 | 9,000 | 0.75 | SIDEWALL PROP | BELT | 1196 | 460/3/60 | 3 | 310 | LEVEL B-2 | W/ WALL MOUNT SLEEVE & INTERLOCK WITH EF B2-1, 39"X39" WALL OPENING, OSHA GUARD & SHUTTER |
| SF | B2-2 | GREENHECK | SBS-3H30--30 | 9,000 | 0.75 | SIDEWALL PROP | BELT | 1196 | 460/3/60 | 3 | 310 | LEVEL B-2 | W/ WALL MOUNT SLEEVE & INTERLOCK WITH EF B2-2, 39"X39" WALL OPENING, OSHA GUARD & SHUTTER |
| SF | B3-1 | GREENHECK | SBE-3H30-20 | 6,000 | 0.75 | SIDEWALL PROP | BELT | 1076 | 460/3/60 | 2 | 300 | LEVEL B-3 | W/ WALL MOUNT SLEEVE & INTERLOCK WITH EF B3-1, 39"X39" WALL OPENING, OSHA GUARD & SHUTTER |
| SF | B3-2 | GREENHECK | SBE-3H30-20 | 6,000 | 0.75 | SIDEWALL PROP | BELT | 1076 | 460/3/60 | 2 | 300 | LEVEL B-3 | W/ WALL MOUNT SLEEVE & INTERLOCK WITH EF B3-2, 39"X39" WALL OPENING, OSHA GUARD & SHUTTER |

**WALL HEAT PUMP SCHEDULE**

| TYPE | MARK | MANUFACTURER | MODEL | COOLING CAPICITY | HEATING CAPACITY | CFM | E.S.P. | VOLTAGE | AMPS | EER | WEIGHT | LOCATION | COMMENTS |
|---|---|---|---|---|---|---|---|---|---|---|---|---|---|
| WAC | P1-1 | FRIEDRICH | YL24N35 | 23,500 | 23,200 | 600 | 0.25 | 230/1/60 | 11.1 COOLING - 12.2 HEATING | 9.4 | 197 | LEVEL P1 OFFICE | 20.5"H X 28.25"W WALL OPENING, & OSA SLIDE SET TO 25CFM OF OUTSIDE AIR |

**LOUVER SCHEDULE - OVERALL**

| TYPE | MARK | MANUFACTURER | MODEL | SIZE | LEVEL SERVED | Comments |
|---|---|---|---|---|---|---|
| L | 1 | ROMLA VENTILATOR | S445 | 2'X2' | B-2 | W/ BIRDSCREEN, STD MILL FINISH |
| L | 3 | ROMLA VENTILATOR | S445 | 7'X10' | P-2 | W/ BIRDSCREEN, STD MILL FINISH |
| L | 5 | ROMLA VENTILATOR | S445 | 3'X2' | P-6 | W/ BIRDSCREEN, STD MILL FINISH |
| L | 6 | ROMLA VENTILATOR | S445 | 3'X2' | P-6 | W/ BIRDSCREEN, STD MILL FINISH |
| L | 7 | ROMLA VENTILATOR | S445 | 4'X8' | P-1 | W/ BIRDSCREEN, STD MILL FINISH |
| L | 8 | ROMLA VENTILATOR | S445 | 4'X8' | P-1 | W/ BIRDSCREEN, STD MILL FINISH |

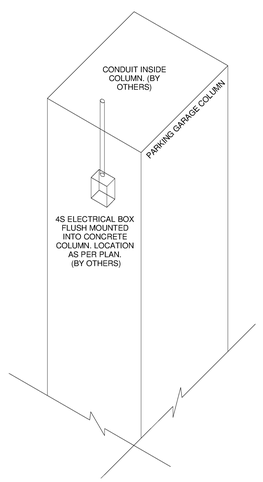


CO SENSOR COLUMN DETAIL (5)
NTS

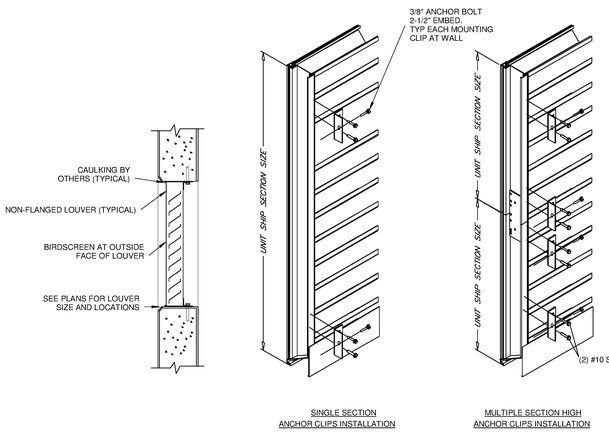


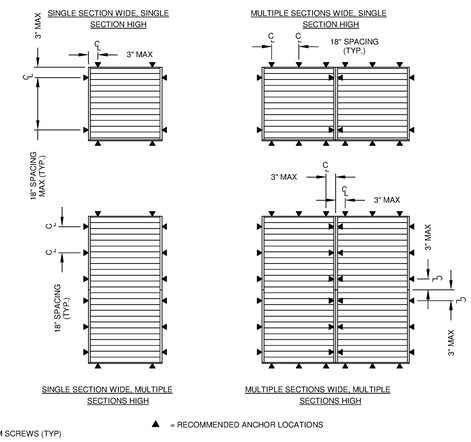


LOUVER MOUNTING DETAIL (4)
1 1/2" = 1'-0"

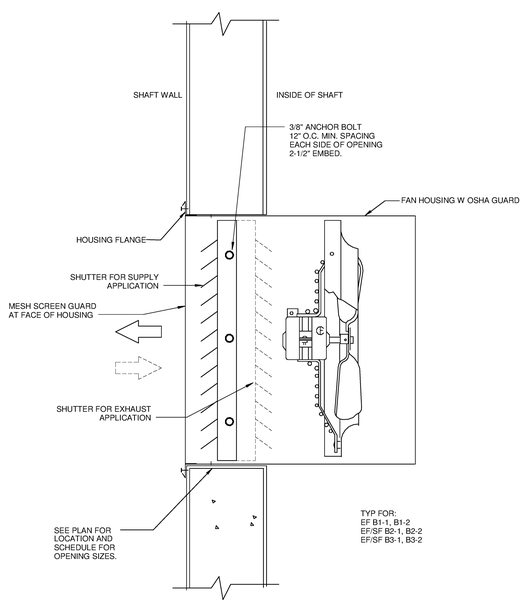


SIDEWALL SUPPLY/EXHAUST DETAIL (3)
NTS

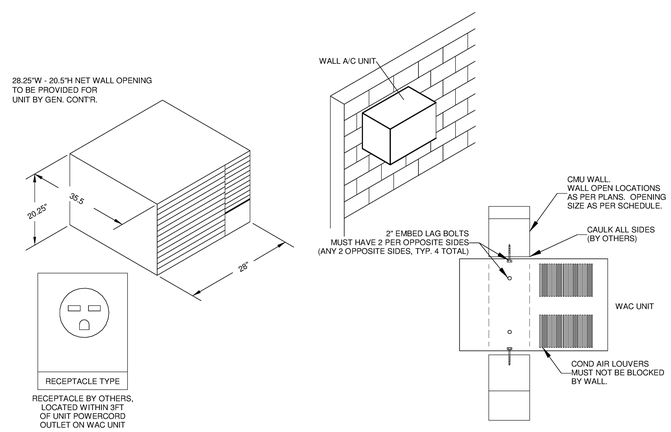


WAC UNIT DETAIL (2)
NTS

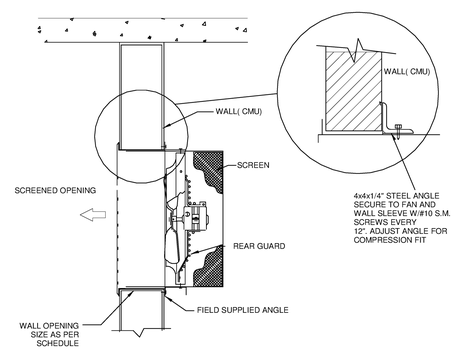


B1-3 & P6-1 FAN MOUNTING DETAIL (1)
NTS

**County of San Diego**
**Cedar & Kettner**
**Development Project**
San Diego, California

McCARTHY
20401 S.W. BIRCH STREET SUITE 300
Newport Beach, California 92660

Architect
Alameda
Irvine
Los Angeles
IPD
Architecture / Engineering / Consulting
www.ipd-global.com
2 Faraday, Suite 101, Irvine CA 92618
Phone 949 595 8004 Fax 949 595 8011

THERMALAIR INC.
AIR CONDITIONING & INDUSTRIAL REFRIGERATION
ENGINEERING & CONTRACTING
CALIFORNIA LICENSE # 102216
1140 RED GUM STREET
ANAHEIM, CA 92806
Ph: (714)630 3200
13-038

| Revision | Date |
|---|---|
| 100% DESIGN DEVELOPMENT | 10/23/13 |
| 90% CDs- 1ST PLAN CHECK | 12/24/13 |
| 2ND PLAN CHECK | 04/23/14 |

| | |
|---|---|
| Date | |
| IPD Job No. | 13-813 |
| Drawn By | |
| Checked By | |
| Scale | As-Noted |

CONSTRUCTION DOCUMENTS

Drawing Title

**MECH SCHEDULES, NOTES, DETAILS**

Drawing No.

M0-1

IPD, Inc.

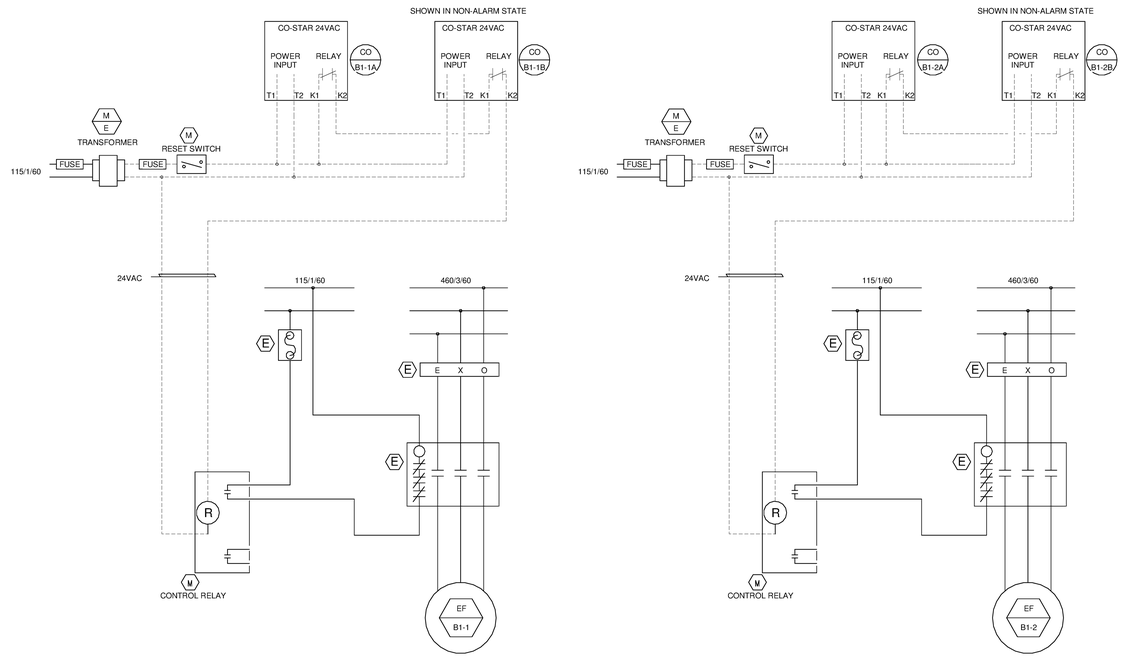


CO SYSTEM WIRING DETAIL LEVEL B-1 (1)
NTS

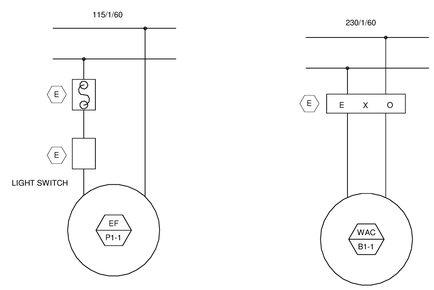


EF P1-1 FAN WIRING (4)
NTS




WAC WIRING (3)
NTS

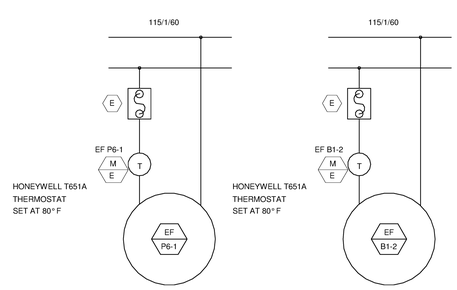


B1-3 & P6-1 FAN WIRING (2)
NTS

**County of San Diego**
**Cedar & Kettner**
**Development Project**
San Diego, California

McCARTHY
20401 S.W. BIRCH STREET SUITE 300
Newport Beach, California 92660

Architect
Alameda
Irvine
Los Angeles
Architecture / Engineering / Consulting
www.ipd-global.com
2 Faraday, Suite 101, Irvine CA 92618
Phone 949 595 8004 Fax 949 595 8011

THERMALAIR INC.
AIR CONDITIONING & INDUSTRIAL REFRIGERATION
ENGINEERING & CONTRACTING
CALIFORNIA LICENSE # 102216
1140 RED GUM STREET
ANAHEIM, CA 92806
Ph: (714)630 3200
13-038

| Revision | Date |
|---|---|
| 100% DESIGN DEVELOPMENT | 10/23/13 |
| 90% CDs- 1ST PLAN CHECK | 12/24/13 |
| 2ND PLAN CHECK | 04/23/14 |

| | |
|---|---|
| Date | |
| IPD Job No. | 13-813 |
| Drawn By | |
| Checked By | |
| Scale | As-Noted |

CONSTRUCTION DOCUMENTS

Drawing Title
**WIRING/CONTROLS**

Drawing No.
MO-2

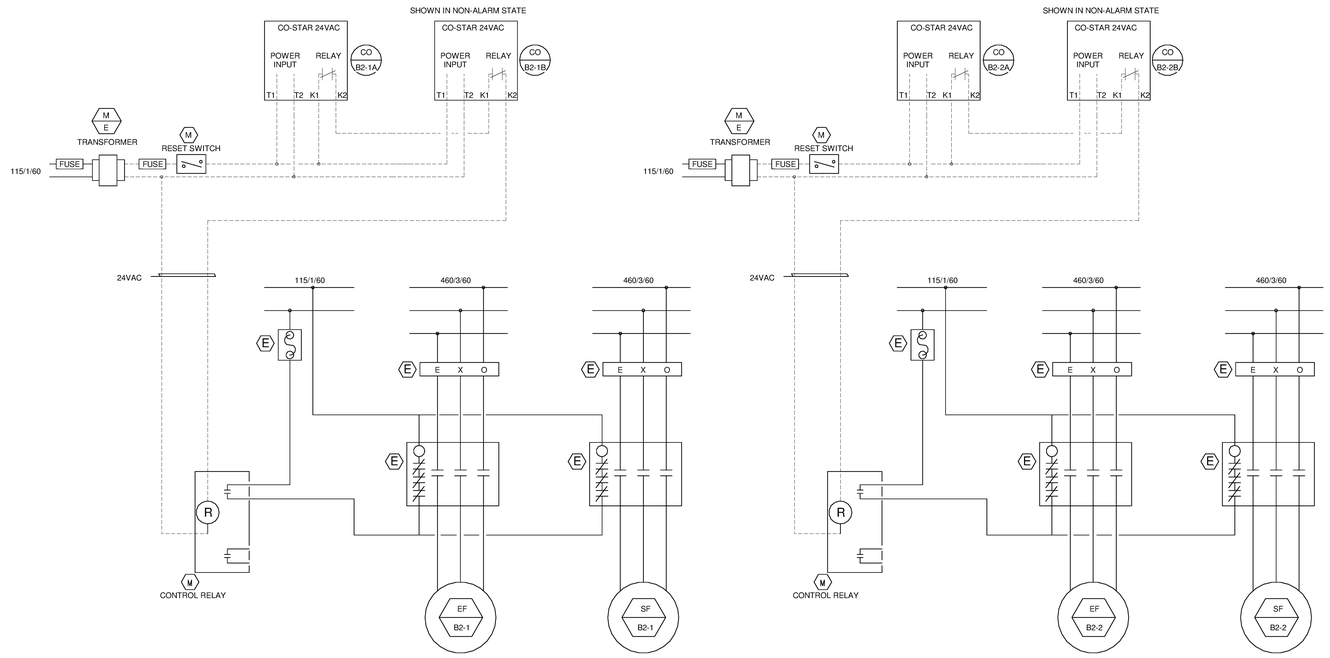


CO SYSTEM WIRING DETAIL LEVEL B-2 (1)
NTS

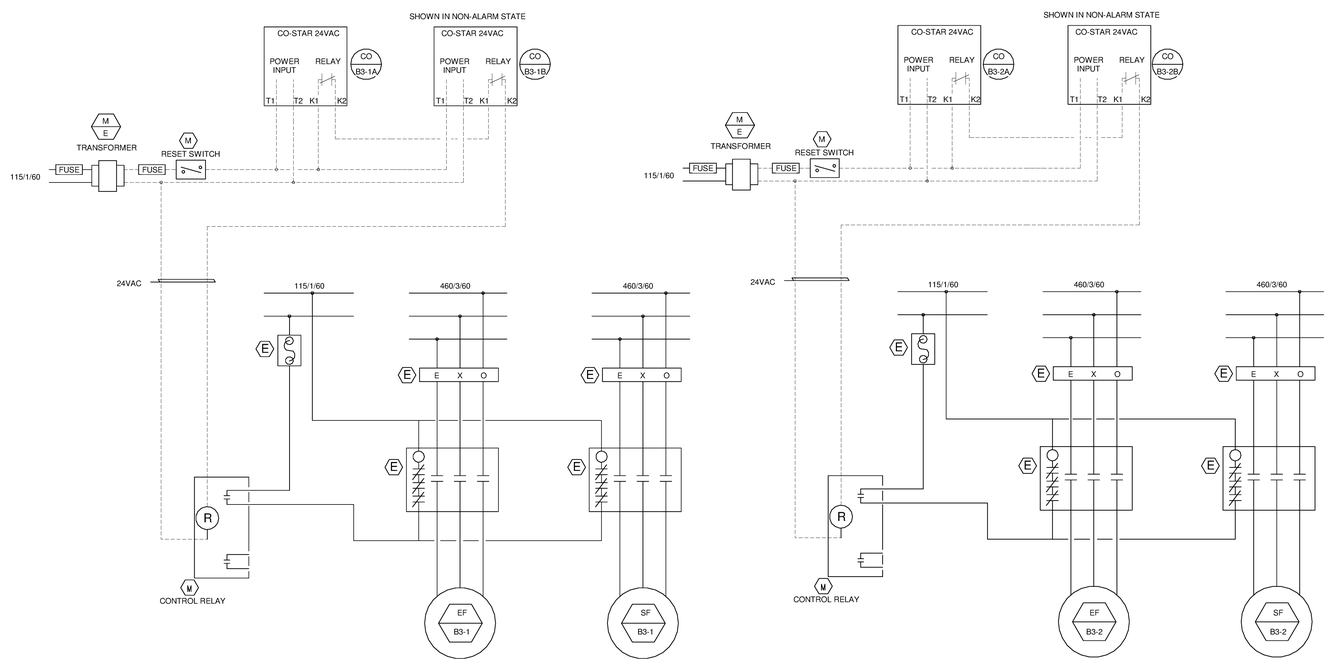


CO SYSTEM WIRING DETAIL LEVEL B-3 (2)
NTS

**County of San Diego**
**Cedar & Kettner**
**Development Project**
San Diego, California

McCARTHY
20401 S.W. BIRCH STREET SUITE 300
Newport Beach, California 92660

Architect
Alameda
Irvine
Los Angeles
IPD
Architecture / Engineering / Consulting
www.ipd-global.com
2 Faraday, Suite 101, Irvine CA 92618
Phone 949 595 8004 Fax 949 595 8011

THERMALAIR INC.
AIR CONDITIONING & INDUSTRIAL REFRIGERATION
ENGINEERING & CONTRACTING
CALIFORNIA LICENSE # 102216
1140 RED GUM STREET
ANAHEIM, CA 92806
Ph: (714)630 3200
13-038

| Revision | Date |
|---|---|
| 100% DESIGN DEVELOPMENT | 10/23/13 |
| 90% CDs- 1ST PLAN CHECK | 12/24/13 |
| 2ND PLAN CHECK | 04/23/14 |

| | |
|---|---|
| Date | |
| IPD Job No. | 13-813 |
| Drawn By | |
| Checked By | |
| Scale | As-Noted |

CONSTRUCTION DOCUMENTS

Drawing Title
**WIRING/CONTROLS**

Drawing No.
MO-3

VENTILATION CALCULATIONS
CMC TABLE 4-1

15,687 SF X 0.75 CFM = 11,765 CFM
SF
12,000 CFM = PROVIDED

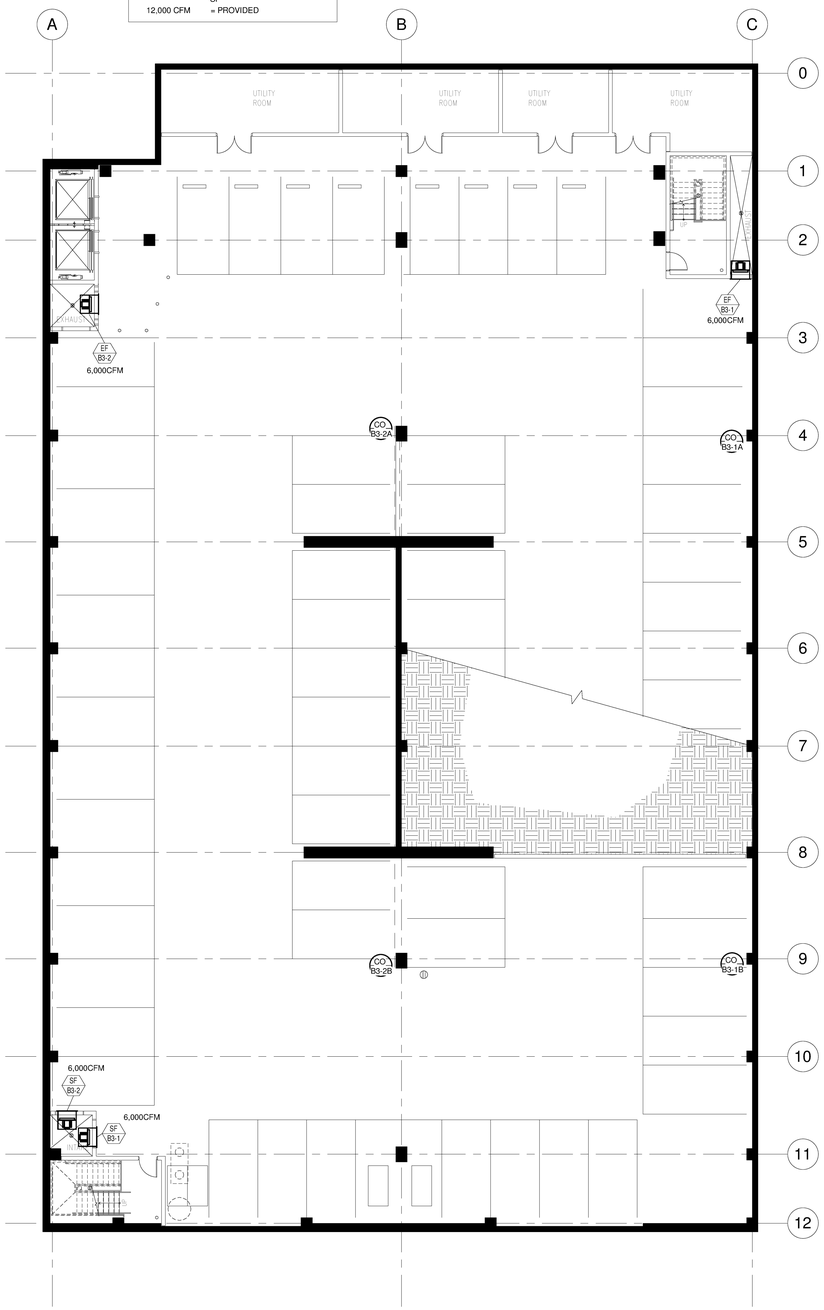


B-3 PARKING LEVEL 1
3/32" = 1'-0"

VENTILATION CALCULATIONS
CMC TABLE 4-1

23,834 SF X 0.75 CFM = 17,875 CFM
SF
18,000 CFM = PROVIDED

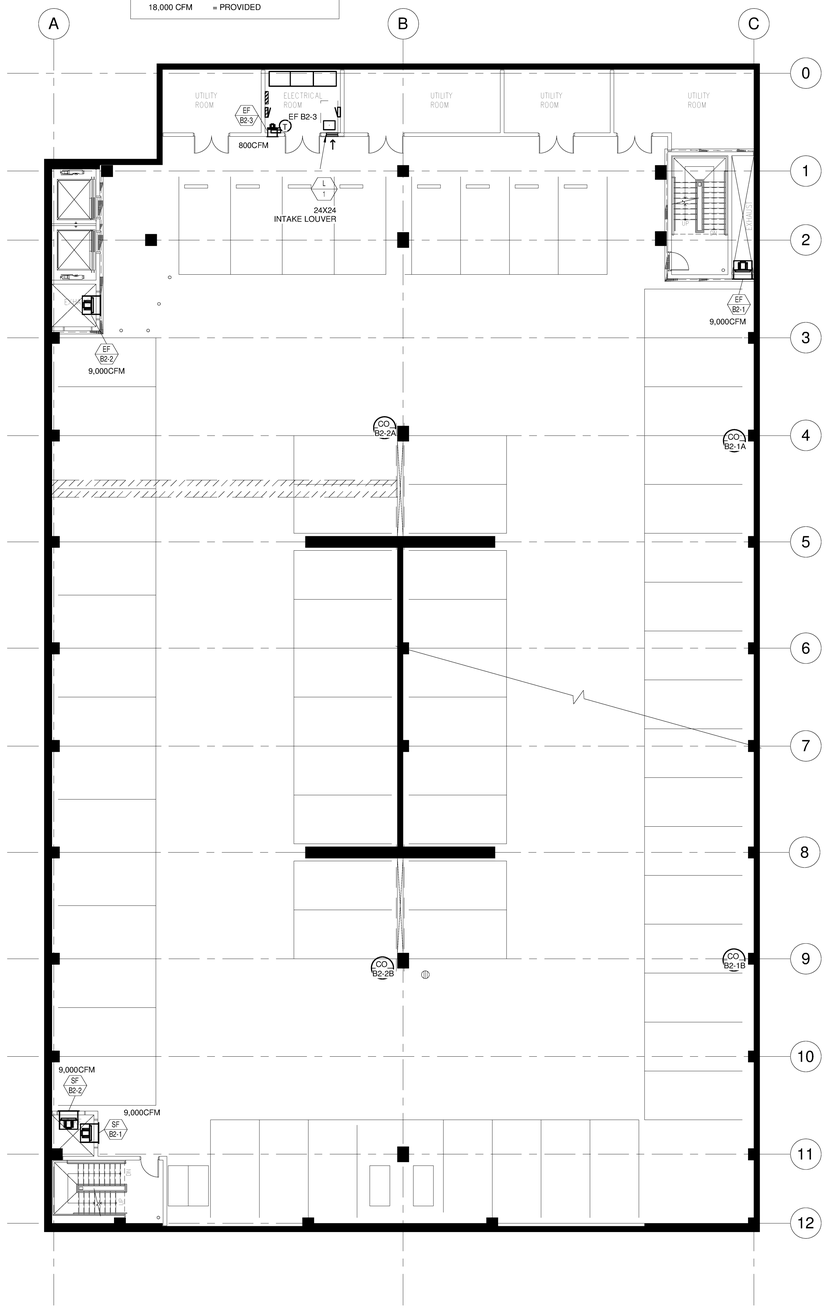


B-2 PARKING LEVEL 3
3/32" = 1'-0"

**County of San Diego**
**Cedar & Kettner**
**Development Project**
San Diego, California

McCARTHY
20401 S.W. BIRCH STREET SUITE 300
Newport Beach, California 92660

Architect
Alameda
Irvine
Los Angeles
Architecture / Engineering / Consulting
www.ipd-global.com
2 Faraday, Suite 101, Irvine CA 92618
Phone 949 595 8004 Fax 949 595 8011

THERMALAIR INC.
AIR CONDITIONING & INDUSTRIAL REFRIGERATION
ENGINEERING & CONTRACTING
CALIFORNIA LICENSE # 102216
1140 RED GUM STREET
ANAHEIM, CA 92806
Ph: (714)630 3200
13-038

| Revision | Date |
|---|---|
| 100% DESIGN DEVELOPMENT | 10/23/13 |
| 90% CDs- 1ST PLAN CHECK | 12/24/13 |
| 2ND PLAN CHECK | 04/23/14 |

| | |
|---|---|
| Date | |
| IPD Job No. | 13-813 |
| Drawn By | |
| Checked By | |
| Scale | As-Noted |

CONSTRUCTION DOCUMENTS

Drawing Title
**MECH B-3 & B-2 PARKING LEVEL**

Drawing No.
M2-1

VENTILATION CALCULATIONS
CMC TABLE 4-1

23,783 SF X 0.75 CFM = 17,837 CFM
SF
18,000 CFM = PROVIDED

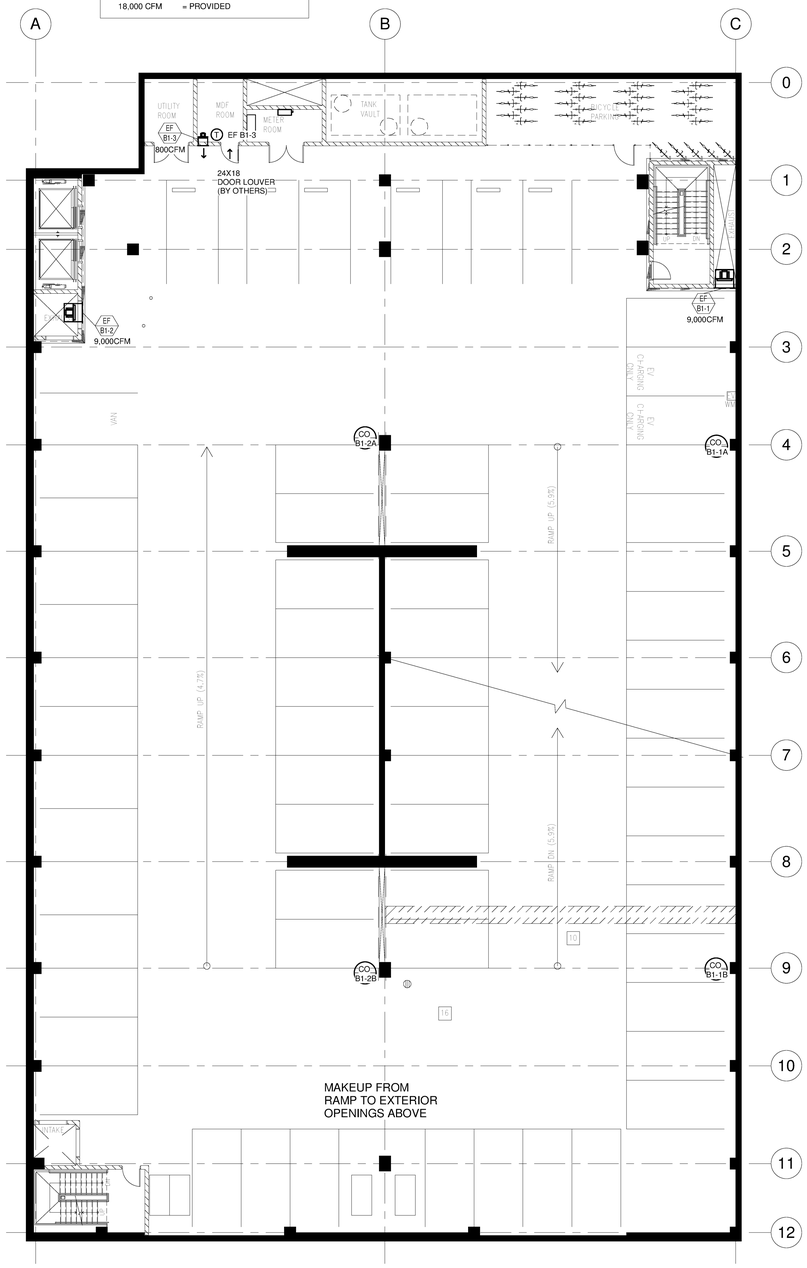


B-1 PARKING LEVEL 1
3/32" = 1'-0"

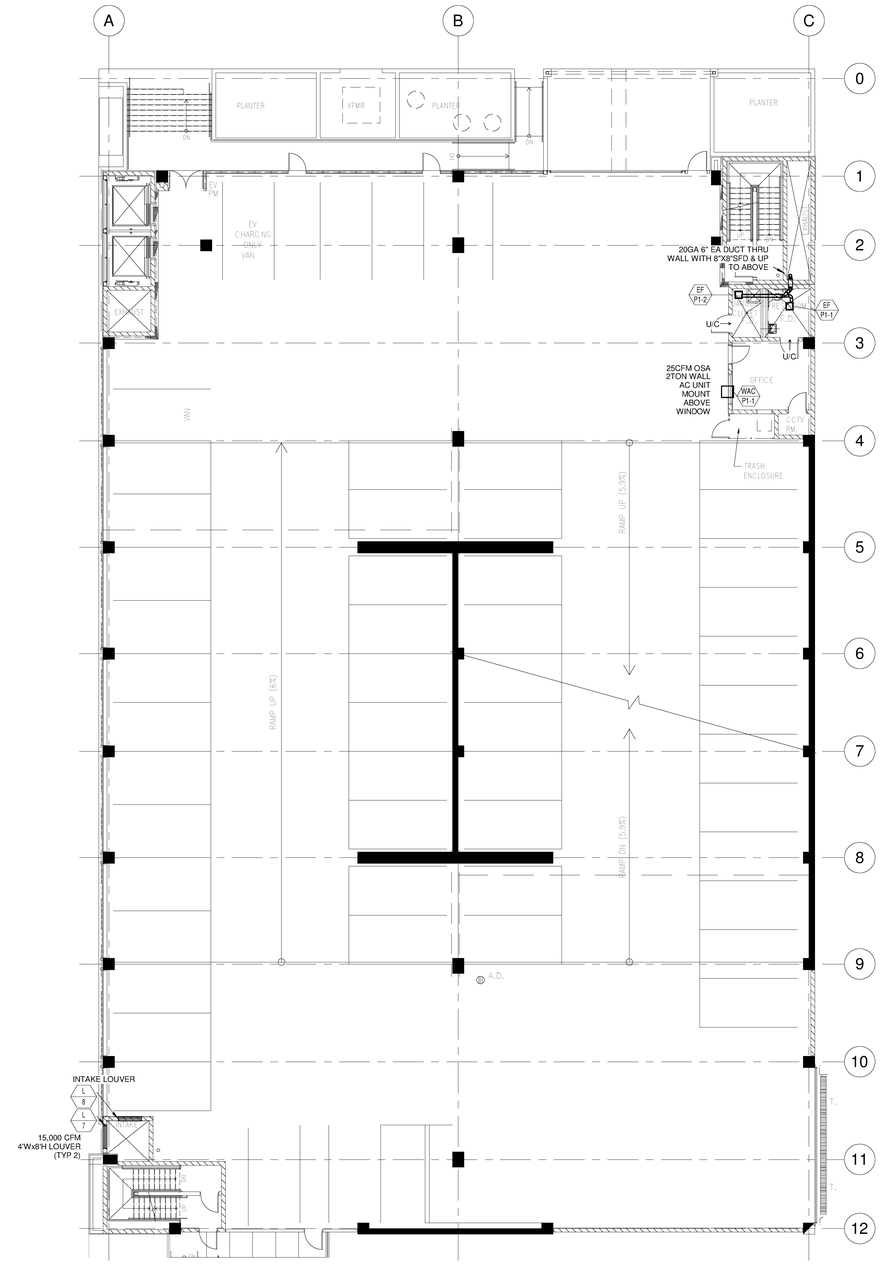


P-1 PARKING LEVEL 2
3/32" = 1'-0"

**County of San Diego**
**Cedar & Kettner**
**Development Project**
San Diego, California

McCARTHY
20401 S.W. BIRCH STREET SUITE 300
Newport Beach, California 92660

Architect
Alameda
Irvine
Los Angeles
IPD
Architecture / Engineering / Consulting
www.ipd-global.com
2 Faraday, Suite 101, Irvine CA 92618
Phone 949 595 8004 Fax 949 595 8011

THERMALAIR INC.
AIR CONDITIONING & INDUSTRIAL REFRIGERATION
ENGINEERING & CONTRACTING
CALIFORNIA LICENSE # 102216
1140 RED GUM STREET
ANAHEIM, CA 92806
Ph: (714)630 3200
13-038

| Revision | Date |
|---|---|
| 100% DESIGN DEVELOPMENT | 10/23/13 |
| 90% CDs- 1ST PLAN CHECK | 12/24/13 |
| 2ND PLAN CHECK | 04/23/14 |

| | |
|---|---|
| Date | |
| IPD Job No. | 13-813 |
| Drawn By | |
| Checked By | |
| Scale | As-Noted |

CONSTRUCTION DOCUMENTS

Drawing Title
**MECH B-1 & P-1 PARKING LEVEL**

Drawing No.
M2-2

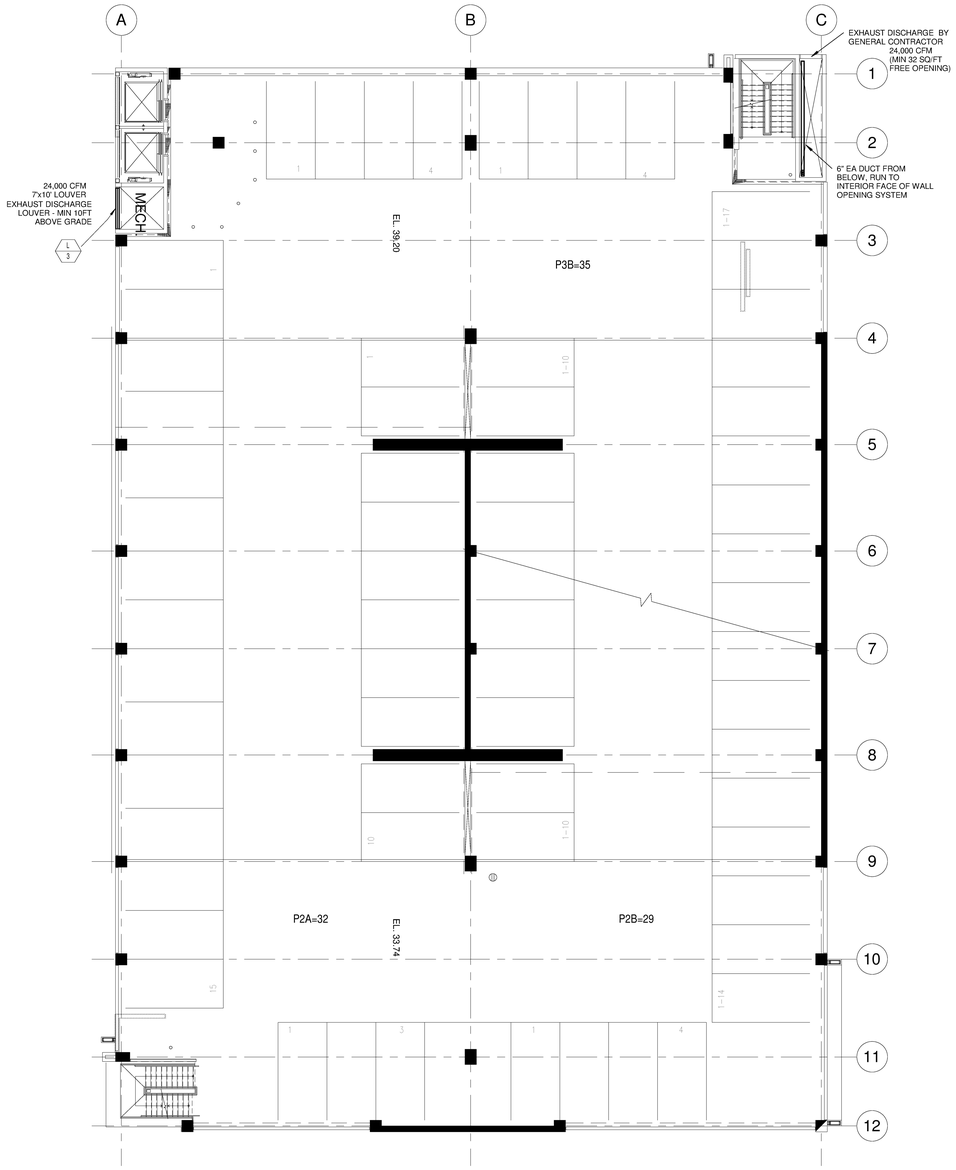


P-2 PARKING LEVEL 1
3/32" = 1'-0"

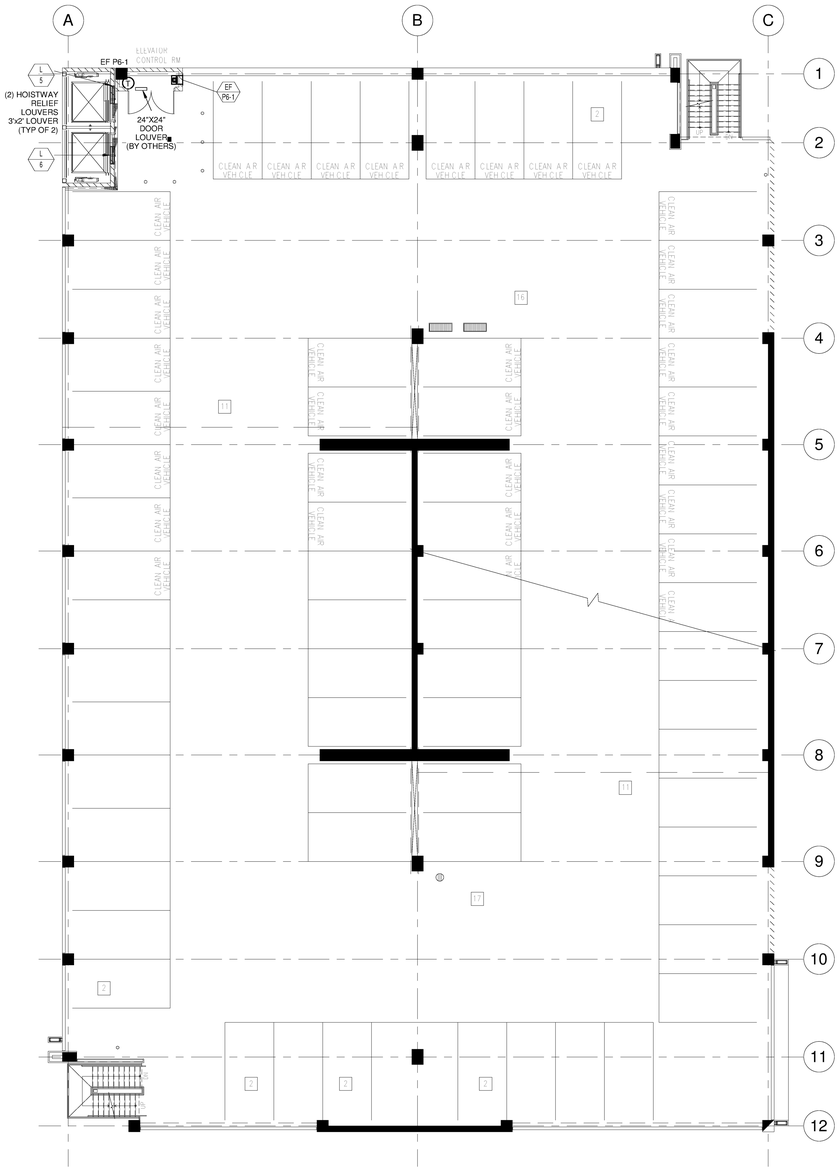


P-6 PARKING LEVEL 2
3/32" = 1'-0"

**County of San Diego**
**Cedar & Kettner**
**Development Project**
San Diego, California

McCARTHY
20401 S.W. BIRCH STREET SUITE 300
Newport Beach, California 92660

Architect
Alameda
Irvine
Los Angeles
IPD
Architecture / Engineering / Consulting
www.ipd-global.com
2 Faraday, Suite 101, Irvine CA 92618
Phone 949 595 8004 Fax 949 595 8011

THERMALAIR INC.
AIR CONDITIONING & INDUSTRIAL REFRIGERATION
ENGINEERING & CONTRACTING
CALIFORNIA LICENSE # 102216
1140 RED GUM STREET
ANAHEIM, CA 92806
Ph: (714)630 3200
13-038

| Revision | Date |
|---|---|
| 100% DESIGN DEVELOPMENT | 10/23/13 |
| 90% CDs- 1ST PLAN CHECK | 12/24/13 |
| 2ND PLAN CHECK | 04/23/14 |

| | |
|---|---|
| Date | |
| IPD Job No. | 13-813 |
| Drawn By | |
| Checked By | |
| Scale | As-Noted |

CONSTRUCTION DOCUMENTS

Drawing Title
**MECH P-2 & P-6 PARKING LEVEL**

Drawing No.
M2-3

## PLUMBING LEGEND AND ABBREVIATIONS

| SYMBOL | ABBREV. | DESCRIPTION | SYMBOL | ABBREV. | DESCRIPTION |
|---|---|---|---|---|---|
| | POC | POINT OF CONNECTION | | ABV | ABOVE |
| | W | WASTE OR SEWER BELOW SLAB | | A/C | ABOVE CEILING |
| PW | PW | PUMPED SANITARY WASTE | | A.F.F. | ABOVE FINISH FLOOR |
| | W | WASTE OR SEWER ABOVE SLAB | | A.F.G. | ABOVE FINISH GRADE |
| | V | SANITARY VENT | | A/G | ABOVE GRADE |
| | CW | COLD WATER | | A.P. | ACCESS PANEL |
| | HW | HOT WATER | | B/F | BELOW FLOOR |
| | HWR | HOT WATER RETURN | | B/G | BELOW GRADE |
| G | G | LOW PRESSURE NATURAL GAS | | CFH | CUBIC FEET PER HOUR |
| MPG | MPG | MEDIUM PRESSURE NATURAL GAS | | DWGS. | DRAWINGS |
| FD | FD | FOUNDATION DRAIN | | EA. | EACH |
| PD | PD | PUMPED FOUNDATION DRAIN | | EXIST. | EXISTING |
| SD | SD | STORM DRAIN | | (E) | EXISTING |
| | SOV | SHUT OFF VALVE | | FT. | FEET OR FOOT |
| | BLV | BALANCING VALVE | | FDC | FIRE DEPARTMENT CONNECTION |
| | PRV | PRESSURE REDUCING VALVE | | F | FIRE RISER |
| FS | FS | FLOOR SINK | | FLR. | FLOOR |
| | AD | AREA DRAIN | | G.P.F. | GALLONS PER FLUSH |
| | FCO | FLOOR CLEAN-OUT | | G.P.H. | GALLONS PER HOUR |
| | WCO | WALL CLEAN-OUT | | G.P.M. | GALLONS PER MINUTE |
| | GCO | GRADE CLEAN-OUT | | I.E. | INVERT ELEVATION |
| | DN | DOWN OR DROP | | KG | KILOGRAMS |
| | UP | RISE OR RISER | | kPq | KILOPASCALS |
| | HB | HOSE BIBB | | L.P.F. | LITERS PER FLUSH |
| | | VALVE ON RISE OR DROP | | L/S | LITERS PER SECOND |
| | U | UNION | | MSA | MEDIUM PRESSURE GAS METER |
| | RV | TEMPERATURE & PRESSURE RELIEF VALVE | | mm | MILLIMETER |
| | | | | NTS | NOT TO SCALE |
| F | F | FIRE SPRINKLER PIPING | | ORD | OVERFLOW ROOF DRAIN |
| CD | CD | CONDENSATE DRAIN PIPING | | LB | POUNDS |
| | FDC | FIRE DEPARTMENT CONNECTION | | PSI | POUNDS PER SQUARE INCH |
| | CP | CIRCULATING PUMP | | RD | ROOF DRAIN |
| | CV | CHECK VALVE | | | SET ASSEMBLY |
| | TP | TRAP PRIMER | | SF | SQUARE FEET |
| | WHA | WATER HAMMER ARRESTOR | | T.D.H. | TOTAL DEVELOPED HEAD |
| | | | | V.T.R. | VENT THROUGH ROOF |
| | REG | GAS REGULATOR W/SHUT-OFF VALVE | | W.C. | WATER COLUMN |
| | | | | WHA | WATER HAMMER ARRESTOR |

## PLUMBING EQUIPMENT SCHEDULE

| SYMBOL | TYPE | DESCRIPTION | LOCATION |
|---|---|---|---|
| SE 1 | SEWAGE EJECTOR | DUPLEX PUMPS, 50 GPM, 25' HEAD, 1HP, 460V/3PH/60Hz | B3 LEVEL |
| SP 1 | STORM PUMP | PRE-ASSEMBLED DUPLEX PUMPS, 40 GPM, 25' HEAD, 230V/1PH/60Hz | B1 LEVEL |
| SOI 1 | SAND OIL INTERCEPTOR | 320 GALLON PRE-CAST CONCRETE, 3'-0" x 7'-0" | B3 LEVEL |
| T 1 | CISTERN TANK | 8190 GALLON CAST-IN PLACE CISTERN | GROUND LEVEL |
| IH 1 | INSTA HOT | HOT WATER HEATER, 277V/1PH/60HZ, 3.0kw | P1 LEVEL |
| IH 2 | INSTA HOT | HOT WATER HEATER, 277V/1PH/60HZ, 6.0kw | P1 LEVEL |

## PLUMBING FIXTURE SCHEDULE

| SYMBOL | FIXTURE | ROUGH-IN | | | | | REMARKS |
|---|---|---|---|---|---|---|---|
| | | HW | CW | W | TRAP | V | |
| FD 1 | FLOOR DRAIN | -- | 1/2" | 4" | - | - | CAST IRON BODY TRAFFIC RATED GRATE |
| AD 2 | AREA DRAIN | -- | -- | 6" | - | - | CAST IRON BODY TRAFFIC RATED GRATE |
| TD 1 | TRENCH DRAIN | -- | -- | 4" | - | - | PRESLOPED UNIT W/ TRAFFIC RATED GRATE, CAST IRON BODY, |
| WC 1 | WATER CLOSET | -- | 1 1/2" | 4" | - | 2" | FLOOR MOUNTED, FLUSH VALVE 1.28 GPF, VIRTUOUS CHINA |
| LAV 1 | WALL MOUNTED LAV | 1/2" | 1/2" | 2" | 1 1/2" | 2" | WALL MOUNTED, 0.5 GPM, TRAP COVER |
| MS 1 | WALL MOUNTED LAV | 3/4" | 3/4" | 3" | 3" | 2" | FLOOR MOUNTED |

## MATERIALS LIST

| ITEM | MATERIAL |
|---|---|
| COLD WATER PIPE | TYPE L COPPER |
| HOT WATER PIPE | TYPE L COPPER |
| WASTE PIPE | DWV CAST-IRON |
| VENT PIPE | DWV CAST-IRON |
| STORM PIPE | DWV CAST-IRON |
| FIRE PIPE | BLK STEEL |

## GENERAL NOTES

1. NO PLUMBING SHALL BE INSTALLED UNTIL ALL REQUIRED PLUMBING PLAN CHECK PERMITS AND APPROVALS HAVE BEEN OBTAINED FROM ALL REQUIRED AGENCIES.
2. LAVATORY FAUCETS, SINK FAUCETS (NOT INCLUDING SERVICE SINK FAUCETS OR FAUCETS DESIGNATED AT INSTITUTIONAL) SHALL MEET THE FLOW REQUIREMENTS OUTLINED IN THE APPLIANCE EFFICIENCY STANDARDS.
3. COORDINATE WITH THE ARCHITECTURAL DRAWINGS FOR EXACT LOCATION OF PLUMBING FIXTURES AND DRAINS.
4. HOSE BIBBS SHALL BE PROTECTED BY AN APPROVED NON-REMOVABLE TYPE BACKFLOW PROTECTION DEVICE. HOSE BIBBS SHALL BE MOUNTED AT +18" ABOVE FLOOR UNLESS OTHERWISE NOTED.
5. PROVIDE ALL TAILPIECES, TRAPS, STOPS, SUPPLY PIPES TO LAVATORIES DESIGNED AS ACCESSIBLE, WITH PRE FORMED INSULATION JACKET.
6. COORDINATE AND VERIFY SIZES, LOCATIONS, DEPTHS AND PRESSURIZED PIPING PRESSURES OF ALL BUILDING UTILITIES WITH CIVIL.
7. COORDINATE AND SCHEDULE TIMING FOR UTILITY SERVICE CONNECTION.
8. ALL LINES BELOW SLAB ON GRADE TO BE LOCATED AWAY FROM ALL LOAD BEARING FOOTINGS.
9. ALL LINES RUNNING BELOW GRADE BEAMS OR PENETRATING, SEE STRUCTURAL DRAWINGS FOR CONSTRUCTION.
10. ALL VENTS THRU ROOF SHALL BE MINIMUM OF 18 INCHES VERTICAL AND TEN FEET HORIZONTAL AWAY FROM ALL AIR CONDITIONING FRESH AIR INTAKES AND PROVIDED WITH VANDAL PROOF HOODS.
11. CONTRACTOR SHALL BE RESPONSIBLE FOR ALL CUTTING AND PATCHING OF WALLS, ROOFS, FOOTINGS, FLOORS, INCLUDING ALL SAW CUTTING AND CORE DRILLING. COORDINATE ALL SAW CUTTING AND CORE DRILLING WITH STRUCTURAL DRAWINGS. ANY CUTTING AND DRILLING REQUIRED OF STRUCTURAL ELEMENTS THAT IS NOT SPECIFICALLY SHOWN ON THE PLANS SHALL BE BROUGHT TO THE ARCHITECTS ATTENTION PRIOR TO CUTTING AND DRILLING. CONTRACTOR SHALL SUBMIT PROPOSED LOCATION AND SIZES OF SUCH CUTTING AND DRILLING FOR THE ARCHITECTS AND STRUCTURAL ENGINEERS APPROVAL.
12. COORDINATE ALL EQUIPMENT LOCATIONS, PIPE PENETRATIONS AND EQUIPMENT PAD LOCATIONS WITH STRUCTURAL DRAWINGS PRIOR TO WORK.
13. COORDINATE INSTALLATION OF ALL EQUIPMENT AND PIPING WITH OTHER TRADES PRIOR TO INSTALLATION. ENSURE THAT ALL CONTROL DEVICES, SHUT-OFF VALVES, ETC. ARE ACCESSIBLE FOR MAINTENANCE. WHERE ACCESS PANELS IN FINISHED SPACES, OTHER THAN THAT SHOWN, CONTRACTOR SHALL PROVIDE AND COORDINATE EXACT LOCATION OF PANELS WITH ARCHITECT PRIOR TO INSTALLATION.
14. INSTALL VALVES WITH UNIONS OR FLANGES AT EACH PIECE OF EQUIPMENT ARRANGED TO ALLOW SERVICE, MAINTENANCE, AND EQUIPMENT REMOVAL WITHOUT SYSTEM SHUT-DOWN.
15. ANY STRUCTURAL FIREPROOFING DAMAGED DURING INSTALLATION OF PLUMBING EQUIPMENT, PIPING, ETC. SHALL BE REPAIRED AT NO COST TO THE OWNER. REPAIRS SHALL BE AS DIRECTED BY THE ARCHITECT.
16. LAVATORY FAUCETS IN RESTROOMS SHALL BE THE SELF-CLOSING TYPE.
17. PROVIDE VACUUM BREAKERS AT HOSE BIBBS.
18. FAUCETS TO BE 2. 2 G.P.M. (0.14 L/S) MAXIMUM.
19. URINALS TO BE 1 G.P.M. (0.06 L/S) MAXIMUM.
20. TOILETS TO BE ULTRA LOW FLUSH TYPE.
21. WATER HEATER IS TO BE USED ON CALIFORNIA ENERGY COMMISSION (CEC) LIST.
22. PROVIDE EXPANSION TANK OR OTHER APPROVED METHOD OF RELIEVING PRESSURE FROM THE WATER SYSTEM.
23. CROSS CONNECTION PROTECTION SHALL BE PROVIDED AT ALL POTABLE WATER SUPPLIED APPLIANCES AND EQUIPMENT.
24. COORDINATE WITH ELECTRICAL AND CONTROL CONTRACTORS FOR ALL POWER REQUIREMENTS PRIOR TO BID.
25. COORDINATE WITH ELECTRICAL AND CONTROL CONTRACTORS FOR ALL POWER REQUIREMENTS PRIOR TO ORDERING ANY EQUIPMENT.
26. UPON INSTALLATION OF ALL EQUIPMENT, DEVICES, VIBRATION ISOLATION, ETC., PROVIDE WRITTEN CONFIRMATION BY EQUIPMENT MANUFACTURER'S REPRESENTATIVES TO ENSURE COMPLIANCE WITH MANUFACTURER'S REQUIREMENTS.
27. PROVIDE DETAILS AND SEISMIC CALCULATIONS FOR ALL EQUIPMENT ON VIBRATION ISOLATION. ALL DETAILS SHALL BE STAMPED BY A STRUCTURAL ENGINEER FROM VIBRATION ISOLATION MANUFACTURER.
28. FOR EACH SUBMITTAL, THE CONTRACTOR SHALL PROVIDE A LETTER (ON COMPANY LETTERHEAD) AND SIGNED BY THE PROJECT MANAGER INDICATING THE SUBMITTAL HAS BEEN FULLY IN HOUSE REVIEWED TO ENSURE FULL COMPLIANCE WITH THE CONTRACT DOCUMENTS AND COORDINATION WITH OTHER TRADES. ANY EXCEPTIONS TO THE CONTRACT DOCUMENTS SHALL BE CLEARLY INDICATED ON THIS LETTER. ANY DISCREPANCIES/EXCEPTIONS NOT IDENTIFIED IN WRITING SHALL BE CORRECTED AT THE SOLE EXPENSE OF THE CONTRACTOR AND AT NO EXPENSE TO THE OWNER AND ENGINEER.
29. THE CONTRACTOR SHALL SELECT ALL CIRCUIT SETTERS/BALANCING VALVES FOR ACTUAL FLOW THROUGH THE PIPE AND THE PROPER PRESSURE DROP TO ENSURE PROPER OPERATION AND NOT BASED ON PIPE SIZES.

**County of San Diego**
**Cedar & Kettner**
**Development Project**
San Diego, California

McCARTHY

20401 S.W. BIRCH STREET SUITE 300
Newport Beach, California 92660

Architect

IPD
Alameda
Irvine
Los Angeles

Architecture / Engineering / Consulting
www.ipd-global.com

2 Faraday, Suite 101, Irvine CA 92618
Phone 949 595 8004 Fax 949 595 8011

MA ENGINEERS

5160 Carroll Canyon Rd, Suite 200
San Diego, California 92121
Consulting Mechanical Engineers
P 858 200-0030 F 858 200-0037
www.ma-engr.com

REGISTERED PROFESSIONAL ENGINEER
MICHAEL R. AKAU
No. 27119
MECHANICAL
EXP. 6-30-15
STATE OF CALIFORNIA
5415

| Revision | Date |
|---|---|
| 100% DESIGN DEVELOPMENT | 10/23/13 |
| 90% CDs - 1ST PLAN CHECK | 12/24/13 |
| 2ND PLAN CHECK | 04/23/14 |

| | |
|---|---|
| Date | |
| IPD Job No. | 13-813 |
| Drawn By | HT |
| Checked By | JC |
| Scale | NO SCALE |

CONSTRUCTION DOCUMENTS

Drawing Title
PLUMBING LEGEND, SCHEDULES, AND GENERAL NOTES

Drawing No.
**P0.1**

IPD, Inc.

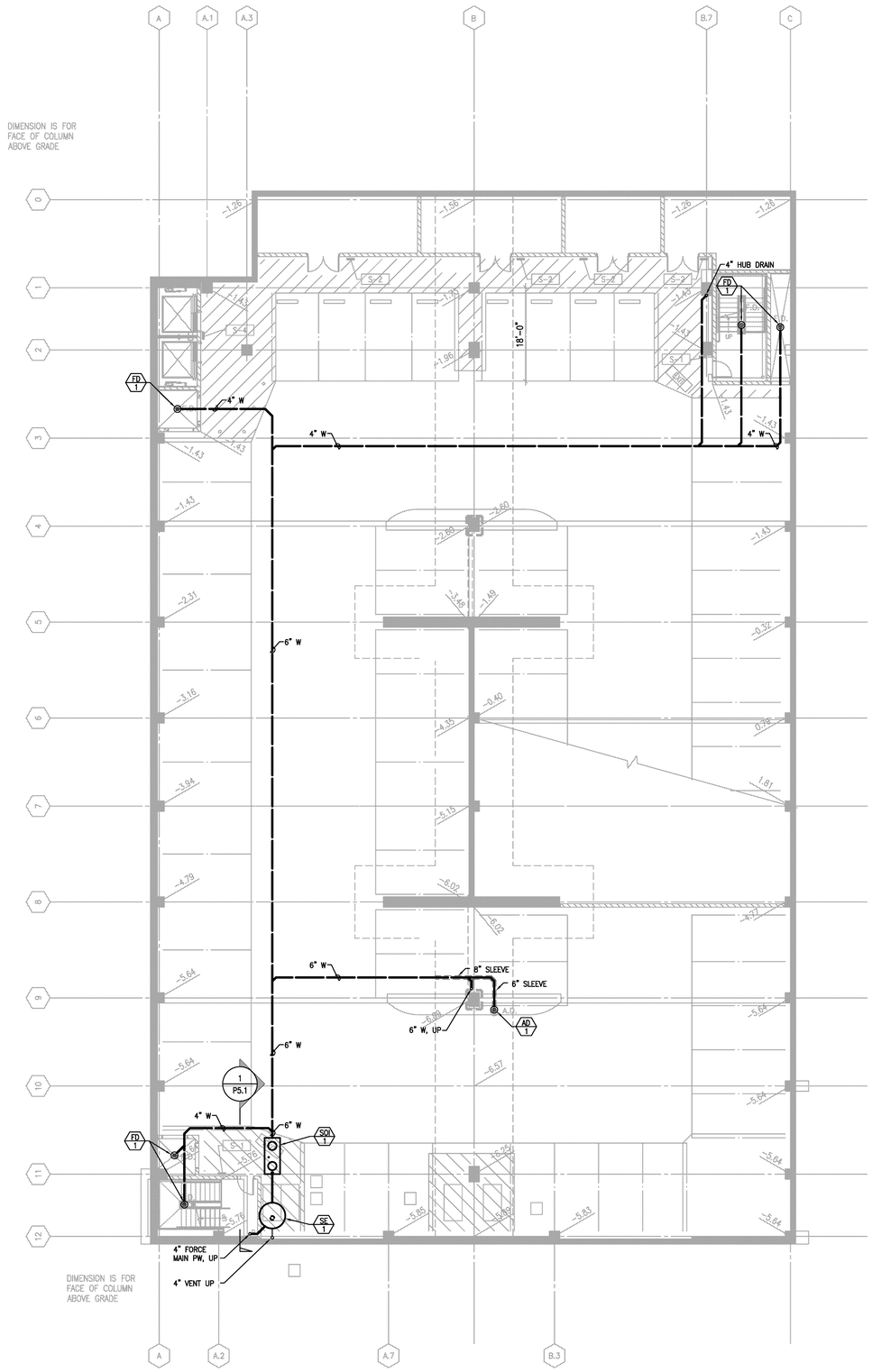


## B3 LEVEL FLOOR PLAN

SCALE: 3/32" = 1'-0"

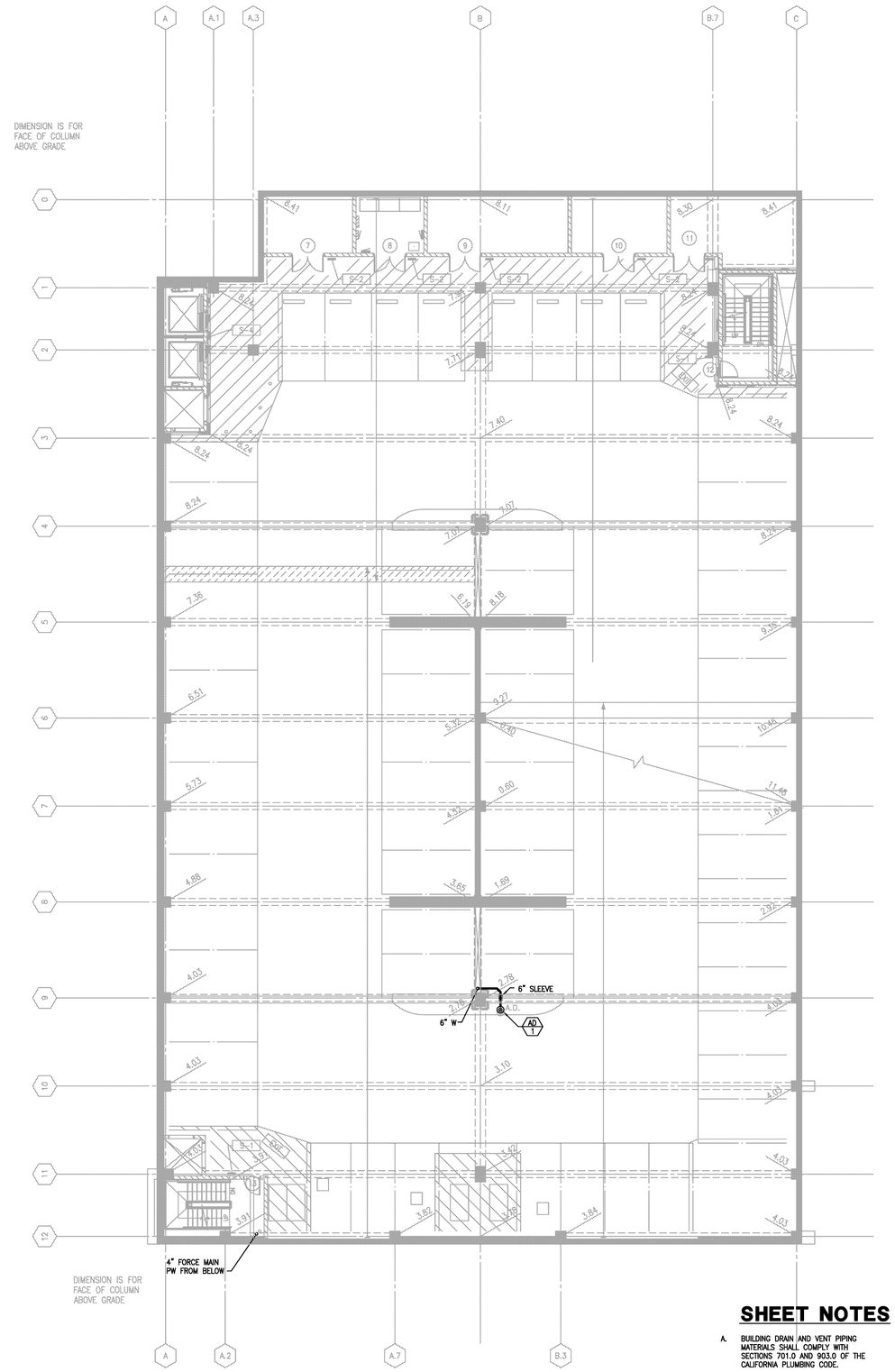


## B2 LEVEL FLOOR PLAN

SCALE: 3/32" = 1'-0"

## SHEET NOTES

A. BUILDING DRAIN AND VENT PIPING MATERIALS SHALL COMPLY WITH SECTIONS 701.0 AND 903.0 OF THE CALIFORNIA PLUMBING CODE.

B. POTABLE WATER PIPING SHALL BE TYPE L COPPER.

C. COORDINATE ALL SLEEVES WITH STRUCTURAL.

**County of San Diego**
**Cedar & Kettner**
**Development Project**
San Diego, California

McCARTHY

20401 S.W. BIRCH STREET SUITE 300
Newport Beach, California 92660

Architect

IPD

Alameda
Irvine
Los Angeles

Architecture / Engineering / Consulting
www.ipd-global.com

2 Faraday, Suite 101, Irvine CA 92618
Phone 949 595 8004 Fax 949 595 8011

MA ENGINEERS

5160 Carroll Canyon Rd, Suite 200
San Diego, California 92121
Consulting Mechanical Engineers
P 858 200-0030 F 858 200-0037
www.ma-engr.com

REGISTERED PROFESSIONAL ENGINEER
MICHAEL R. AKKO
No. 27118
MECHANICAL
EXP. 6-30-15
STATE OF CALIFORNIA
5415

| Revision | Date |
|---|---|
| 100% DESIGN DEVELOPMENT | 10/23/13 |
| 90% CDs - 1ST PLAN CHECK | 12/24/13 |
| 2ND PLAN CHECK | 04/23/14 |

| | |
|---|---|
| Date | |
| IPD Job No. | 13-813 |
| Drawn By | HT |
| Checked By | JC |
| Scale | 3/32" = 1'-0" |

CONSTRUCTION DOCUMENTS

Drawing Title

PLUMBING
B3 AND B2
LEVEL PLAN

Drawing No.

**P2.1**

IPD, Inc.

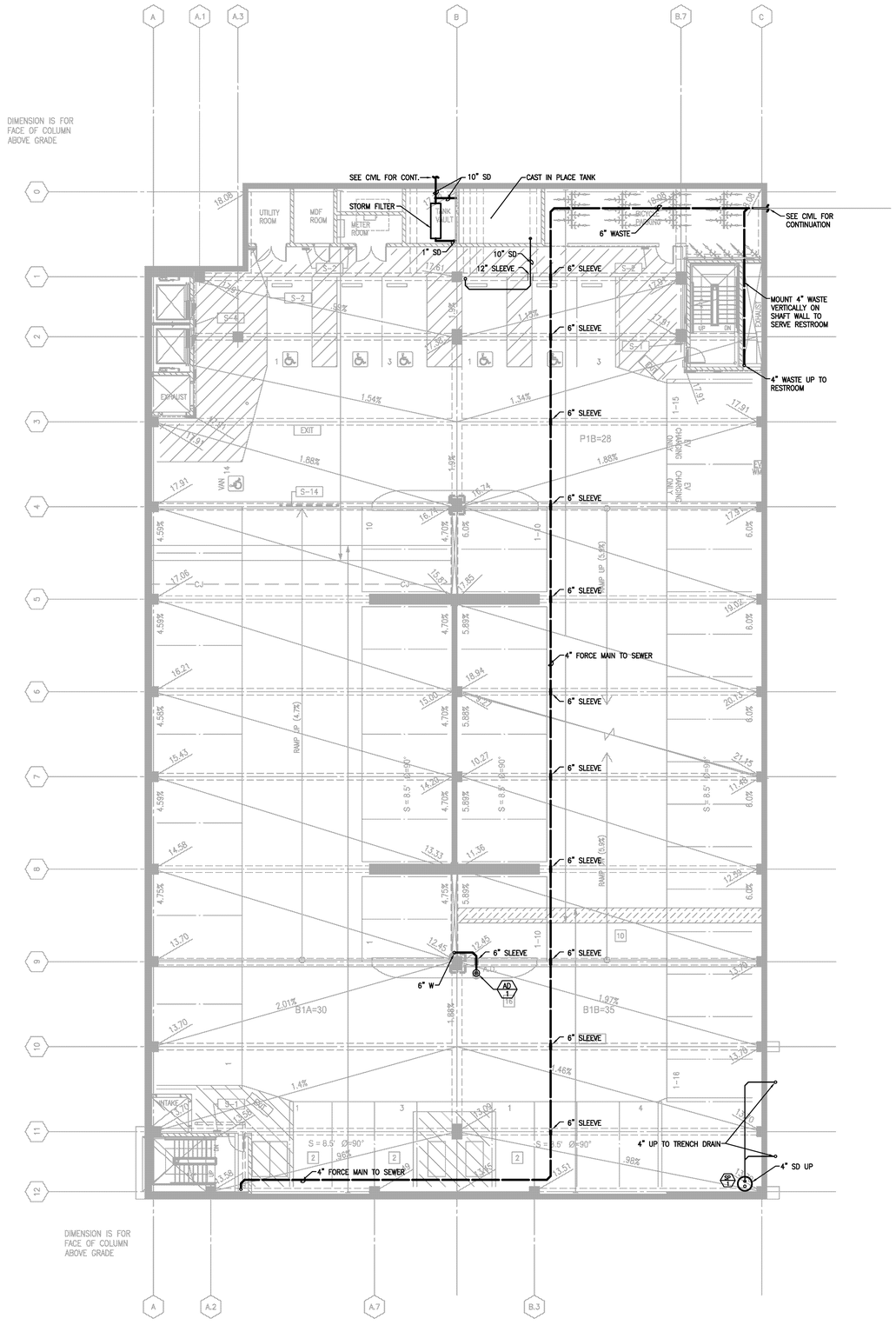


## B1 LEVEL FLOOR PLAN

SCALE: 3/32" = 1'-0"

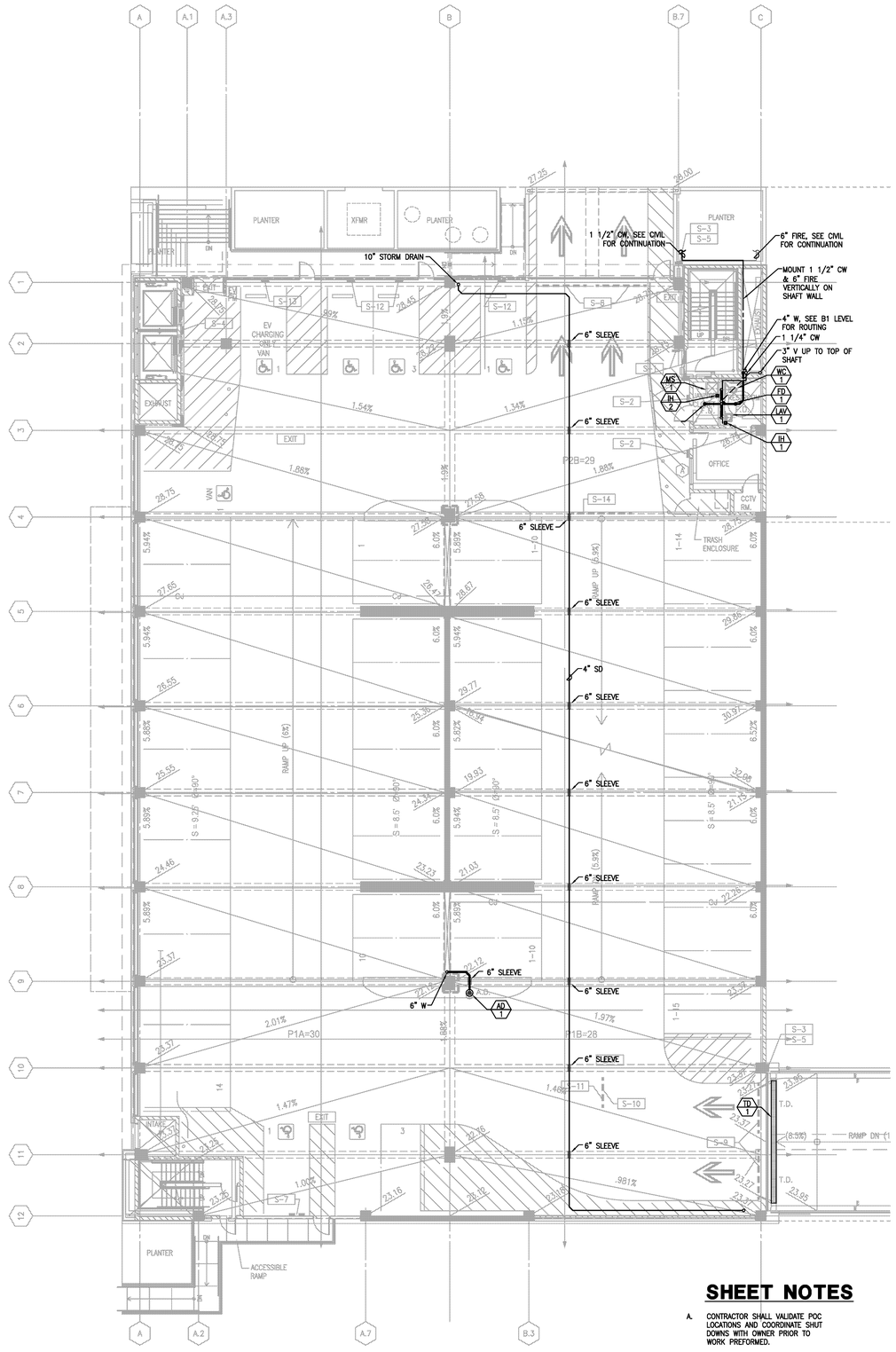


## P1 LEVEL FLOOR PLAN

SCALE: 3/32" = 1'-0"

## SHEET NOTES

A. CONTRACTOR SHALL VALIDATE POC LOCATIONS AND COORDINATE SHUT DOWNS WITH OWNER PRIOR TO WORK PREFORMED.

B. PROVIDE SHUT OFF VALVES AT ALL BRANCH CONNECTIONS.

C. BUILDING DRAIN AND VENT PIPING MATERIALS SHALL COMPLY WITH SECTIONS 701.0 AND 903.0 OF THE CALIFORNIA PLUMBING CODE.

D. POTABLE WATER PIPING SHALL BE TYPE L COPPER.

E. COORDINATE ALL SLEEVES WITH STRUCTURAL.

**County of San Diego**
**Cedar & Kettner**
**Development Project**
San Diego, California

McCARTHY

20401 S.W. BIRCH STREET SUITE 300
Newport Beach, California 92660

Architect

IPD

Alameda
Irvine
Los Angeles

Architecture / Engineering / Consulting
www.ipd-global.com

2 Faraday, Suite 101, Irvine CA 92618
Phone 949 595 8004 Fax 949 595 8011

MA ENGINEERS

5160 Carroll Canyon Rd, Suite 200
San Diego, California 92121
Consulting Mechanical Engineers
Ⓟ858 200-0030 Ⓕ858 200-0037
www.ma-engr.com

REGISTERED PROFESSIONAL ENGINEER
MICHAEL R. AKIYAMA
No. 27118
MECHANICAL
EXP. 6-30-15
STATE OF CALIFORNIA
5415

| Revision | Date |
|---|---|
| 100% DESIGN DEVELOPMENT | 10/23/13 |
| 90% CDs - 1ST PLAN CHECK | 12/24/13 |
| 2ND PLAN CHECK | 04/23/14 |

| | |
|---|---|
| Date | |
| IPD Job No. | 13-813 |
| Drawn By | HT |
| Checked By | JC |
| Scale | 3/32" = 1'-0" |

CONSTRUCTION DOCUMENTS

Drawing Title

PLUMBING
B1 AND P1
LEVEL PLAN

Drawing No.

**P2.2**

IPD, Inc.

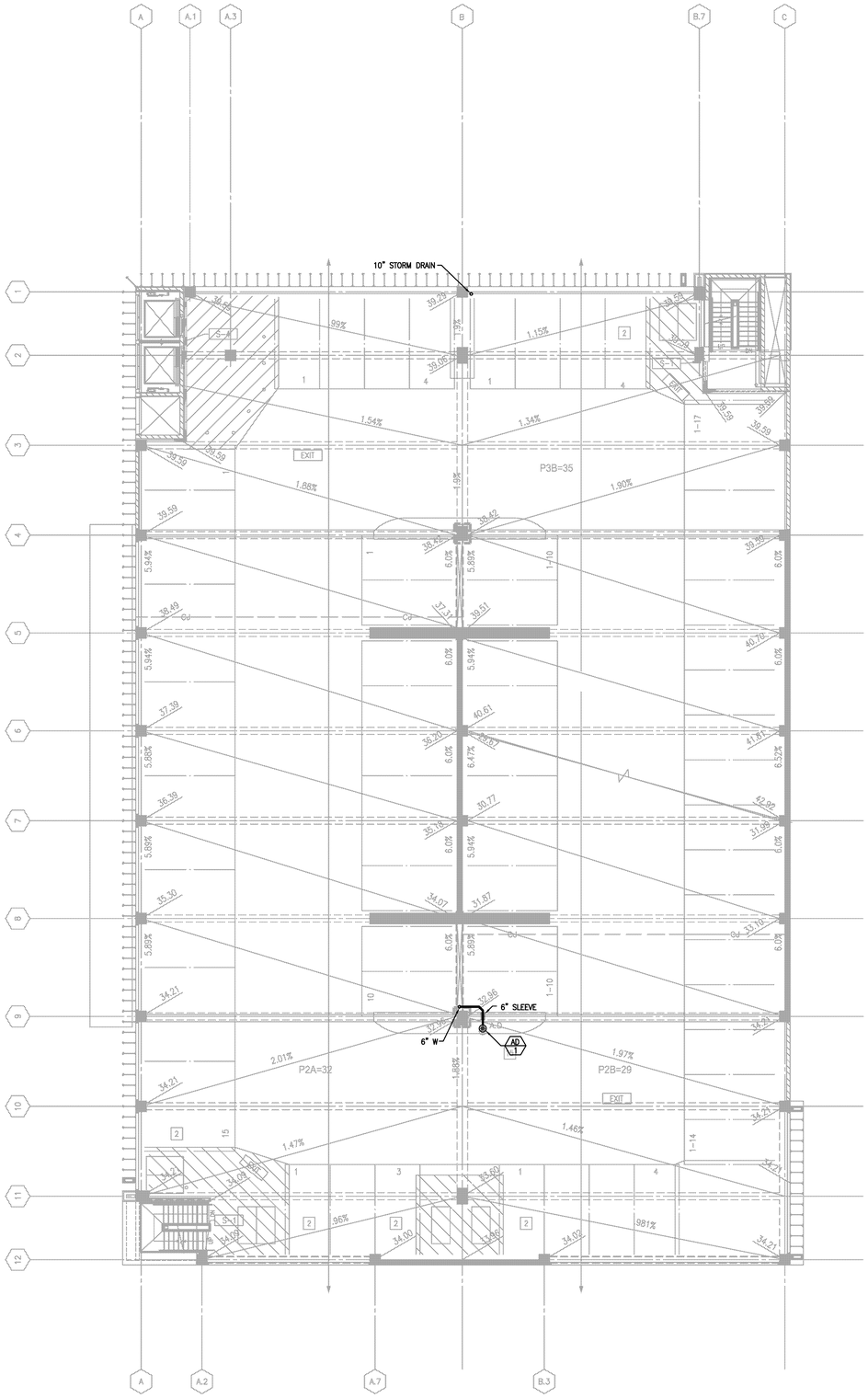


## P2 LEVEL FLOOR PLAN

SCALE: 3/32" = 1'-0"

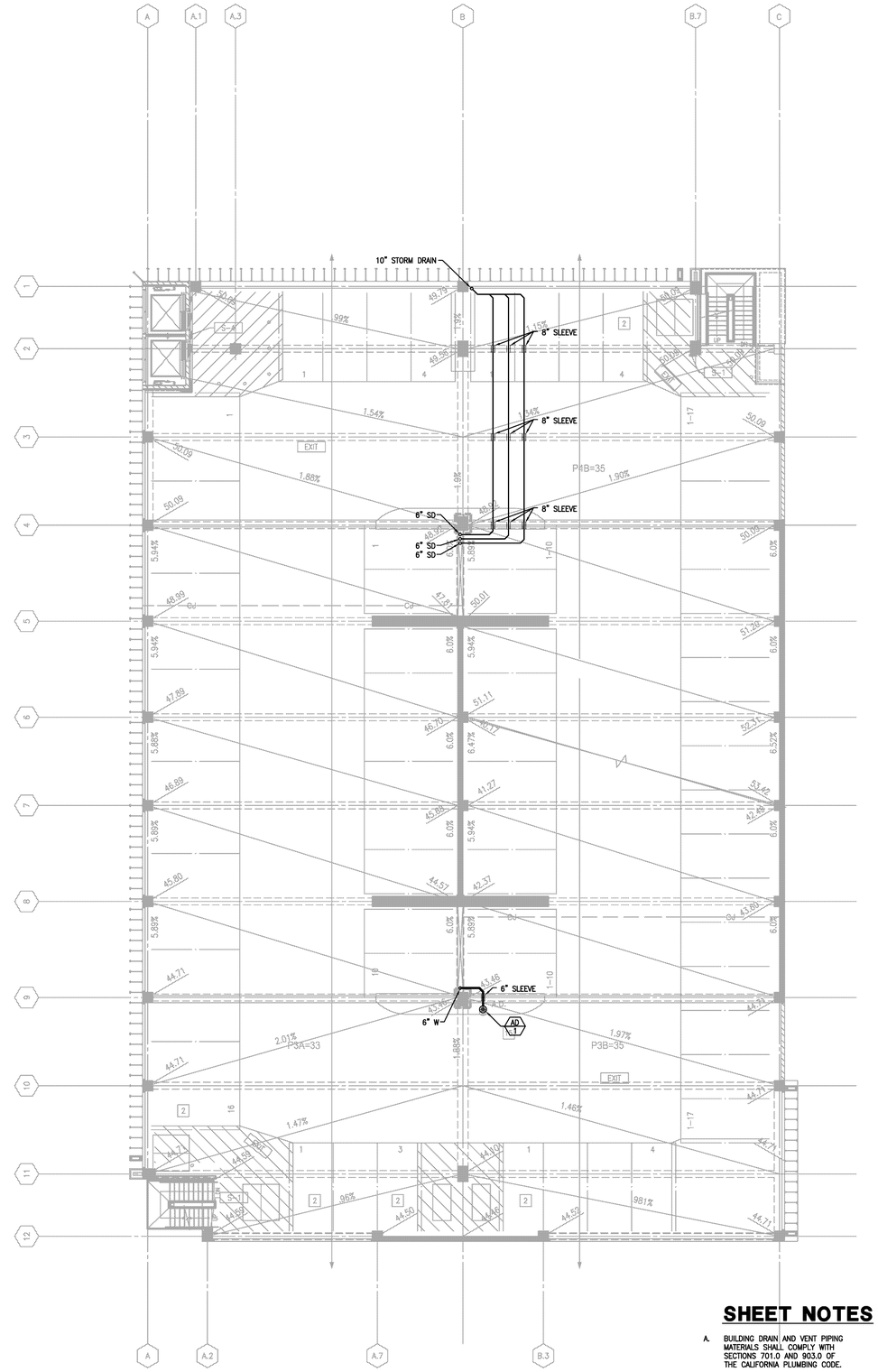


## P3 LEVEL FLOOR PLAN

SCALE: 3/32" = 1'-0"

## SHEET NOTES

A. BUILDING DRAIN AND VENT PIPING MATERIALS SHALL COMPLY WITH SECTIONS 701.0 AND 903.0 OF THE CALIFORNIA PLUMBING CODE.

B. POTABLE WATER PIPING SHALL BE TYPE L COPPER.

C. COORDINATE ALL SLEEVES WITH STRUCTURAL.

**County of San Diego**
**Cedar & Kettner**
**Development Project**
San Diego, California

McCARTHY

20401 S.W. BIRCH STREET SUITE 300
Newport Beach, California 92660

Architect

IPD

Alameda
Irvine
Los Angeles

Architecture / Engineering / Consulting
www.ipd-global.com

2 Faraday, Suite 101, Irvine CA 92618
Phone 949 595 8004 Fax 949 595 8011

MA ENGINEERS

5160 Carroll Canyon Rd, Suite 200
San Diego, California 92121
Consulting Mechanical Engineers
Ⓟ 858 200-0030 Ⓕ 858 200-0037
www.ma-engr.com

REGISTERED PROFESSIONAL ENGINEER
MICHAEL R. ARONA
No. 27119
MECHANICAL
EXP. 6-30-15
STATE OF CALIFORNIA
5415

| Revision | Date |
|---|---|
| 100% DESIGN DEVELOPMENT | 10/23/13 |
| 90% CDs - 1ST PLAN CHECK | 12/24/13 |
| 2ND PLAN CHECK | 04/23/14 |

| | |
|---|---|
| Date | |
| IPD Job No. | 13-813 |
| Drawn By | HT |
| Checked By | JC |
| Scale | 3/32" = 1'-0" |

CONSTRUCTION DOCUMENTS

Drawing Title

PLUMBING
P2 AND P3
LEVEL PLAN

Drawing No.

**P2.3**

IPD, Inc.

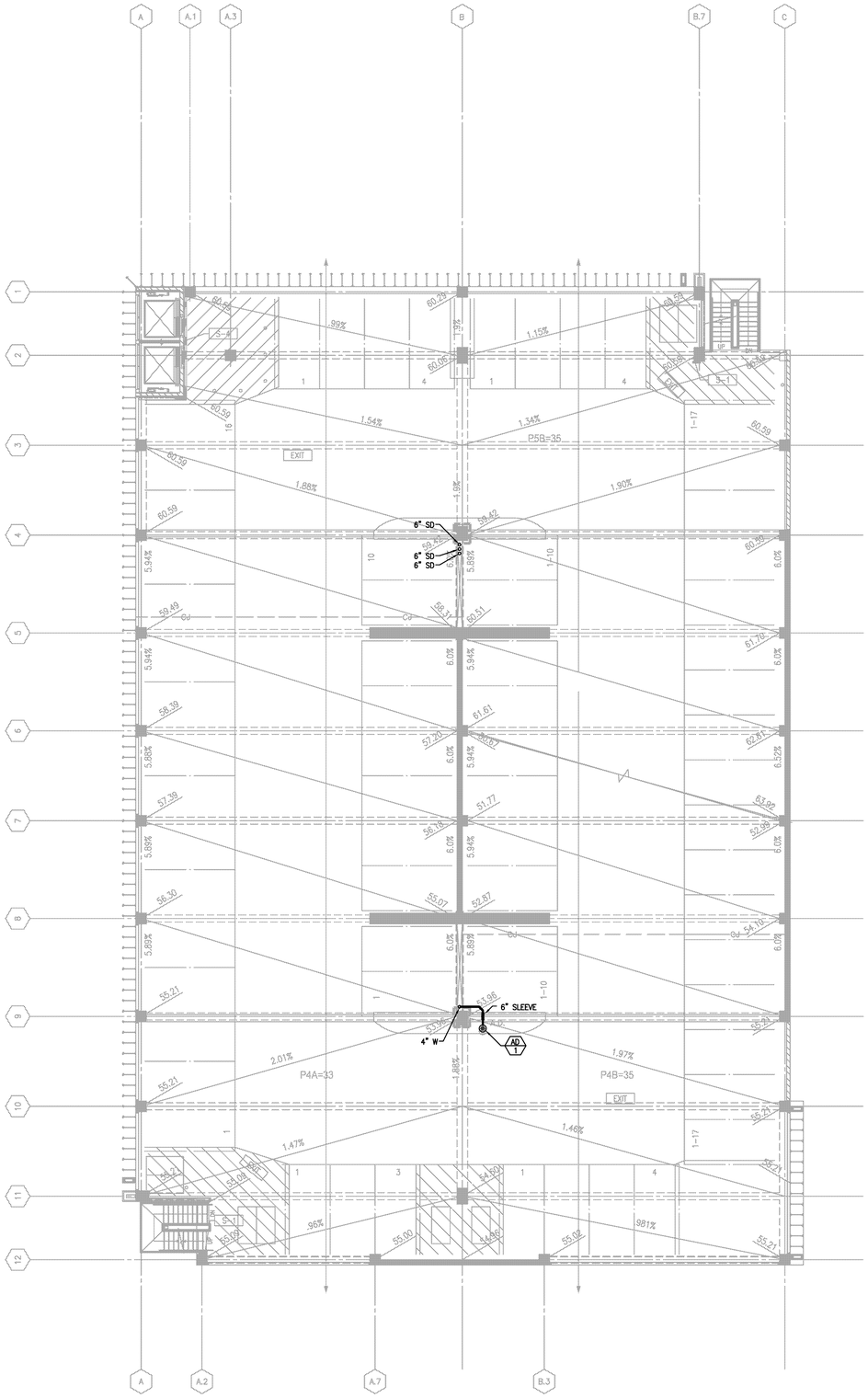


## P4 LEVEL FLOOR PLAN

SCALE: 3/32" = 1'-0"

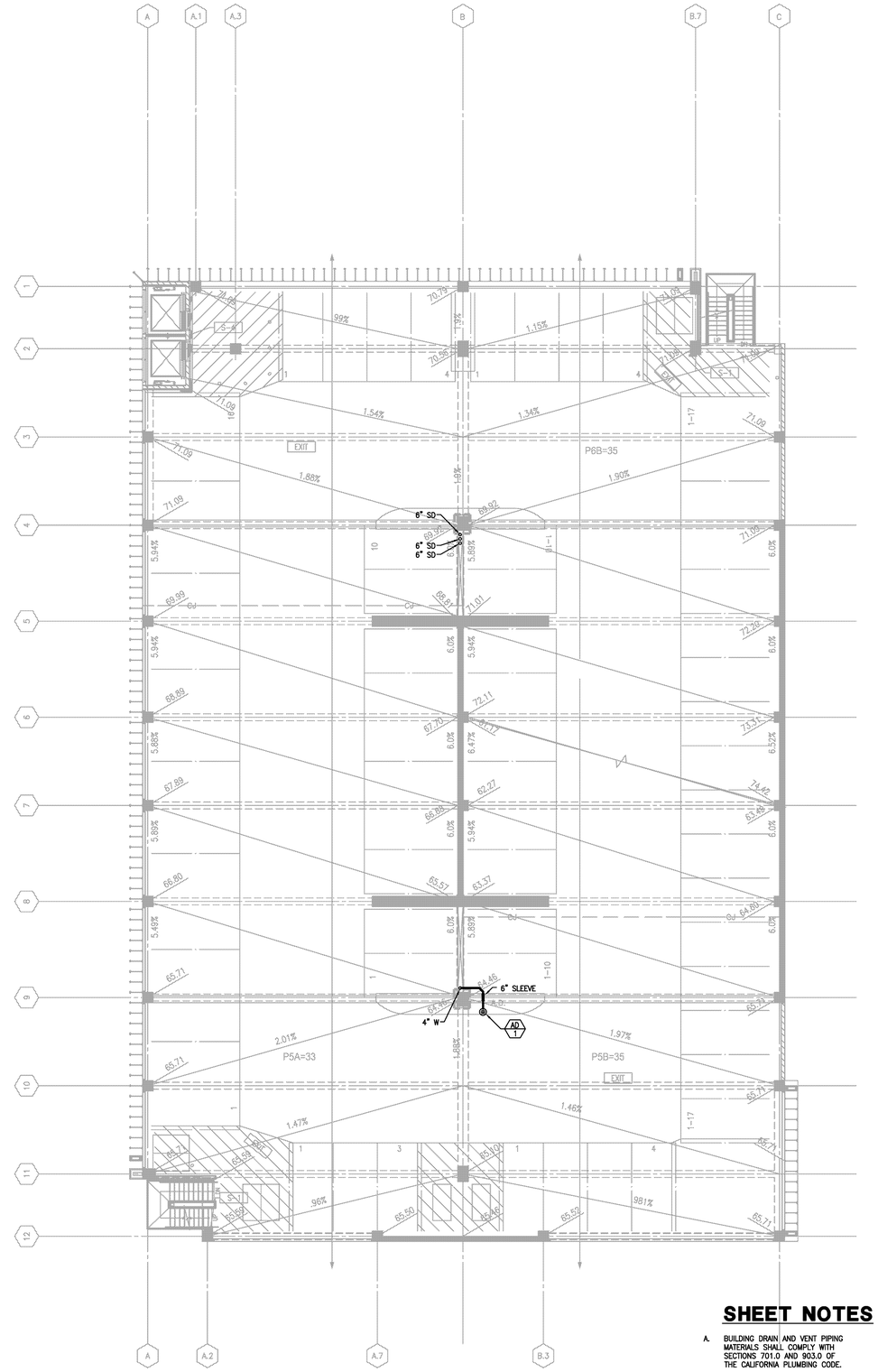


## P5 LEVEL FLOOR PLAN

SCALE: 3/32" = 1'-0"

## SHEET NOTES

A. BUILDING DRAIN AND VENT PIPING MATERIALS SHALL COMPLY WITH SECTIONS 701.0 AND 903.0 OF THE CALIFORNIA PLUMBING CODE.

B. POTABLE WATER PIPING SHALL BE TYPE L COPPER.

C. COORDINATE ALL SLEEVES WITH STRUCTURAL.

**County of San Diego**
**Cedar & Kettner**
**Development Project**
San Diego, California

McCARTHY
20401 S.W. BIRCH STREET SUITE 300
Newport Beach, California 92660

Architect
IPD
Alameda
Irvine
Los Angeles
Architecture / Engineering / Consulting
www.ipd-global.com
2 Faraday, Suite 101, Irvine CA 92618
Phone 949 595 8004 Fax 949 595 8011

MA ENGINEERS
5160 Carroll Canyon Rd, Suite 200
San Diego, California 92121
Consulting Mechanical Engineers
T 858 200-0030 F 858 200-0037
www.ma-engr.com

REGISTERED PROFESSIONAL ENGINEER
MICHAEL R. AKINS
No. 27119
MECHANICAL
EXP. 6-30-15
STATE OF CALIFORNIA
5415

| Revision | Date |
|---|---|
| 100% DESIGN DEVELOPMENT | 10/23/13 |
| 90% CDs - 1ST PLAN CHECK | 12/24/13 |
| 2ND PLAN CHECK | 04/23/14 |

| | |
|---|---|
| Date | |
| IPD Job No. | 13-813 |
| Drawn By | HT |
| Checked By | JC |
| Scale | 3/32" = 1'-0" |

CONSTRUCTION DOCUMENTS

Drawing Title
PLUMBING
P4 AND P5
LEVEL PLAN

Drawing No.
**P2.4**

IPD, Inc.

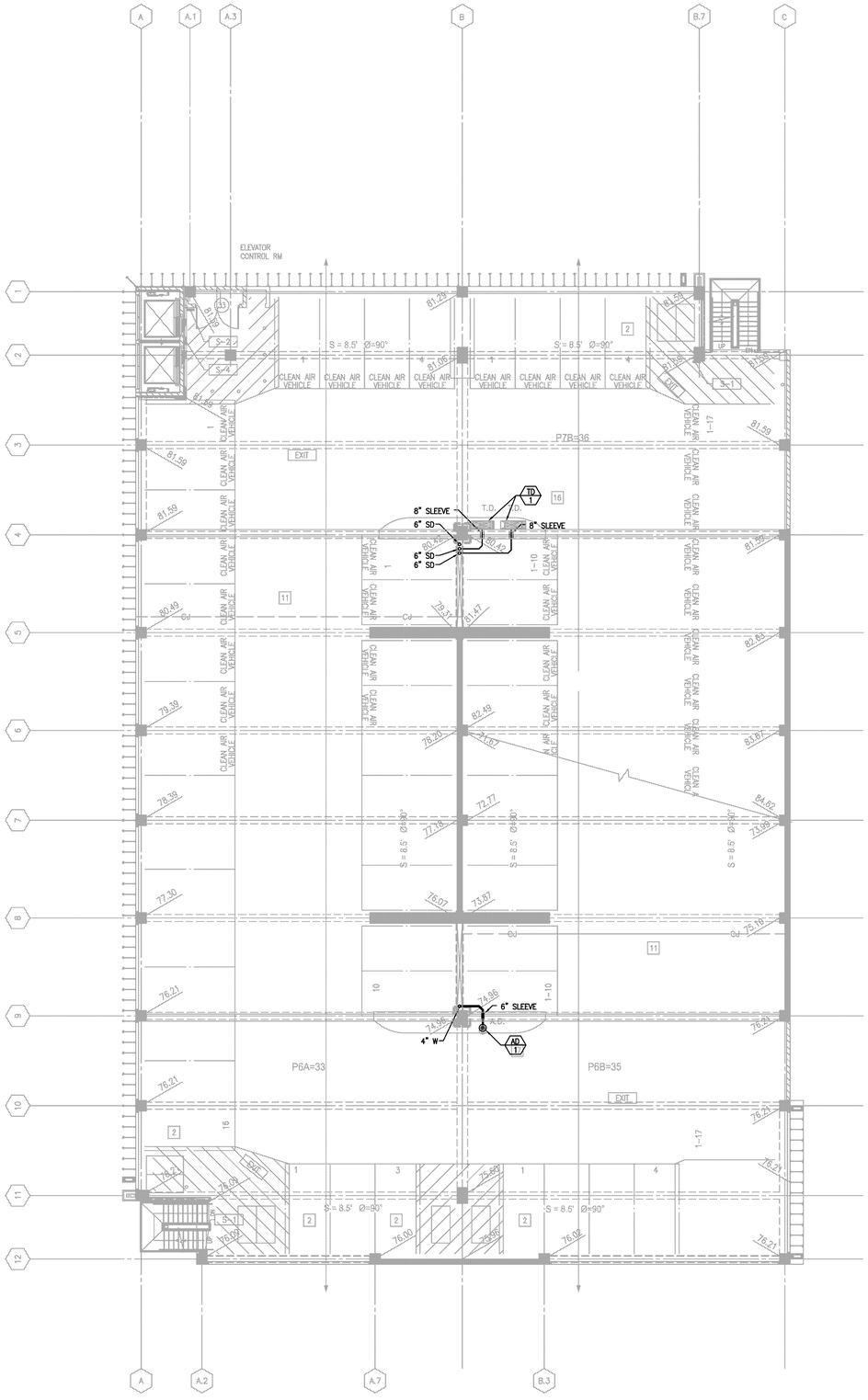


## P6 LEVEL FLOOR PLAN

SCALE: 3/32" = 1'-0"

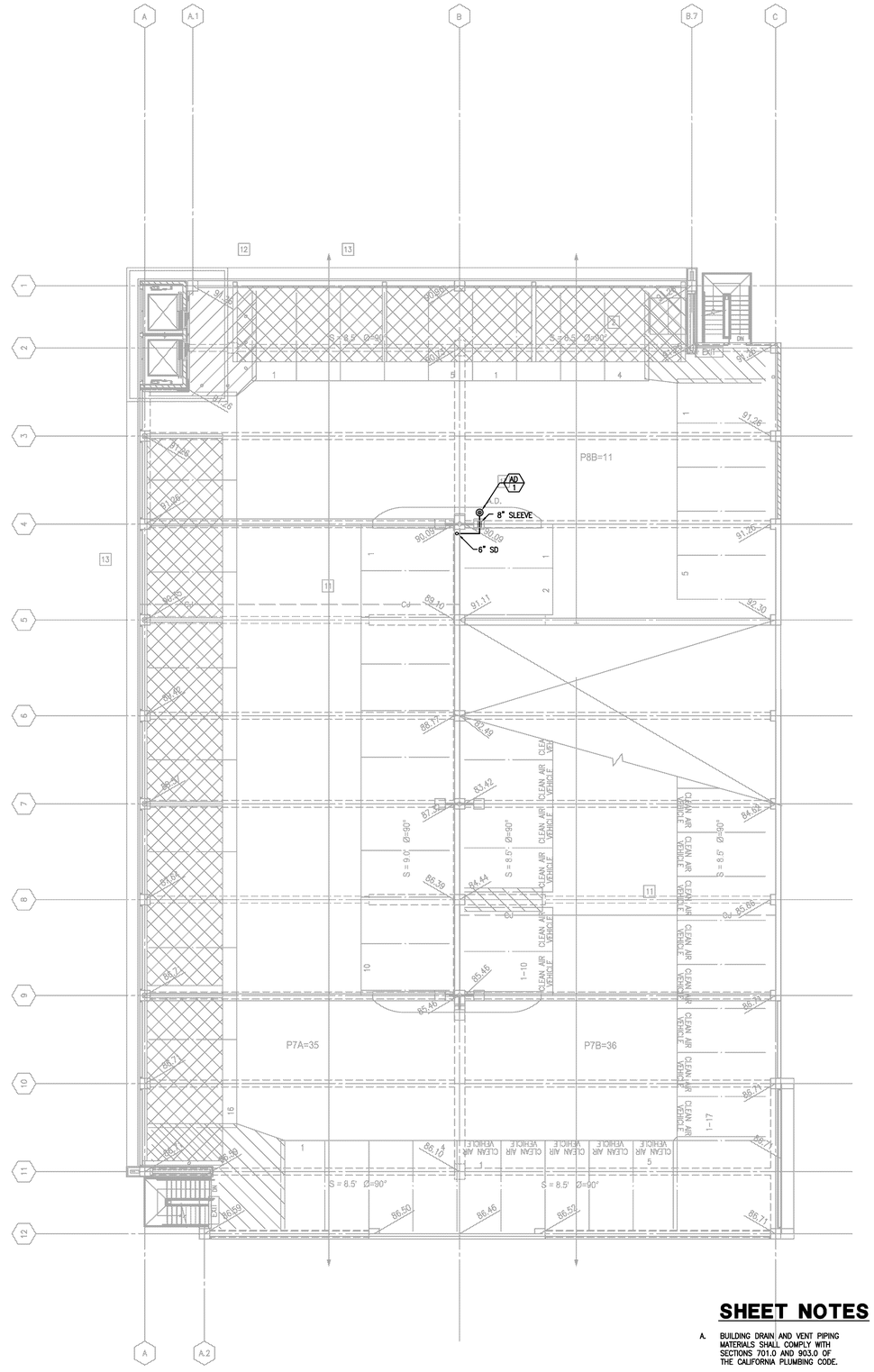


## P7 LEVEL FLOOR PLAN

SCALE: 3/32" = 1'-0"

## SHEET NOTES

A. BUILDING DRAIN AND VENT PIPING MATERIALS SHALL COMPLY WITH SECTIONS 701.0 AND 903.0 OF THE CALIFORNIA PLUMBING CODE.

B. POTABLE WATER PIPING SHALL BE TYPE L COPPER.

C. COORDINATE ALL SLEEVES WITH STRUCTURAL.

**County of San Diego**
**Cedar & Kettner**
**Development Project**
San Diego, California

McCARTHY
20401 S.W. BIRCH STREET SUITE 300
Newport Beach, California 92660

Architect
Alameda
Irvine
Los Angeles
IPD
Architecture / Engineering / Consulting
www.ipd-global.com
2 Faraday, Suite 101, Irvine CA 92618
Phone 949 595 8004 Fax 949 595 8011

MA ENGINEERS
5160 Carroll Canyon Rd, Suite 200
San Diego, California 92121
Consulting Mechanical Engineers
858 200-0030 858 200-0037
www.ma-engr.com

REGISTERED PROFESSIONAL ENGINEER
MICHAEL R. HAYES
No. 27119
MECHANICAL
EXP. 6-30-15
STATE OF CALIFORNIA
5415

| Revision | Date |
|---|---|
| 100% DESIGN DEVELOPMENT | 10/23/13 |
| 90% CDs - 1ST PLAN CHECK | 12/24/13 |
| 2ND PLAN CHECK | 04/23/14 |

| | |
|---|---|
| Date | |
| IPD Job No. | 13-813 |
| Drawn By | HT |
| Checked By | JC |
| Scale | 3/32" = 1'-0" |

CONSTRUCTION DOCUMENTS

Drawing Title
PLUMBING
P6 AND P7
LEVEL PLAN

Drawing No.
**P2.5**

IPD, Inc.

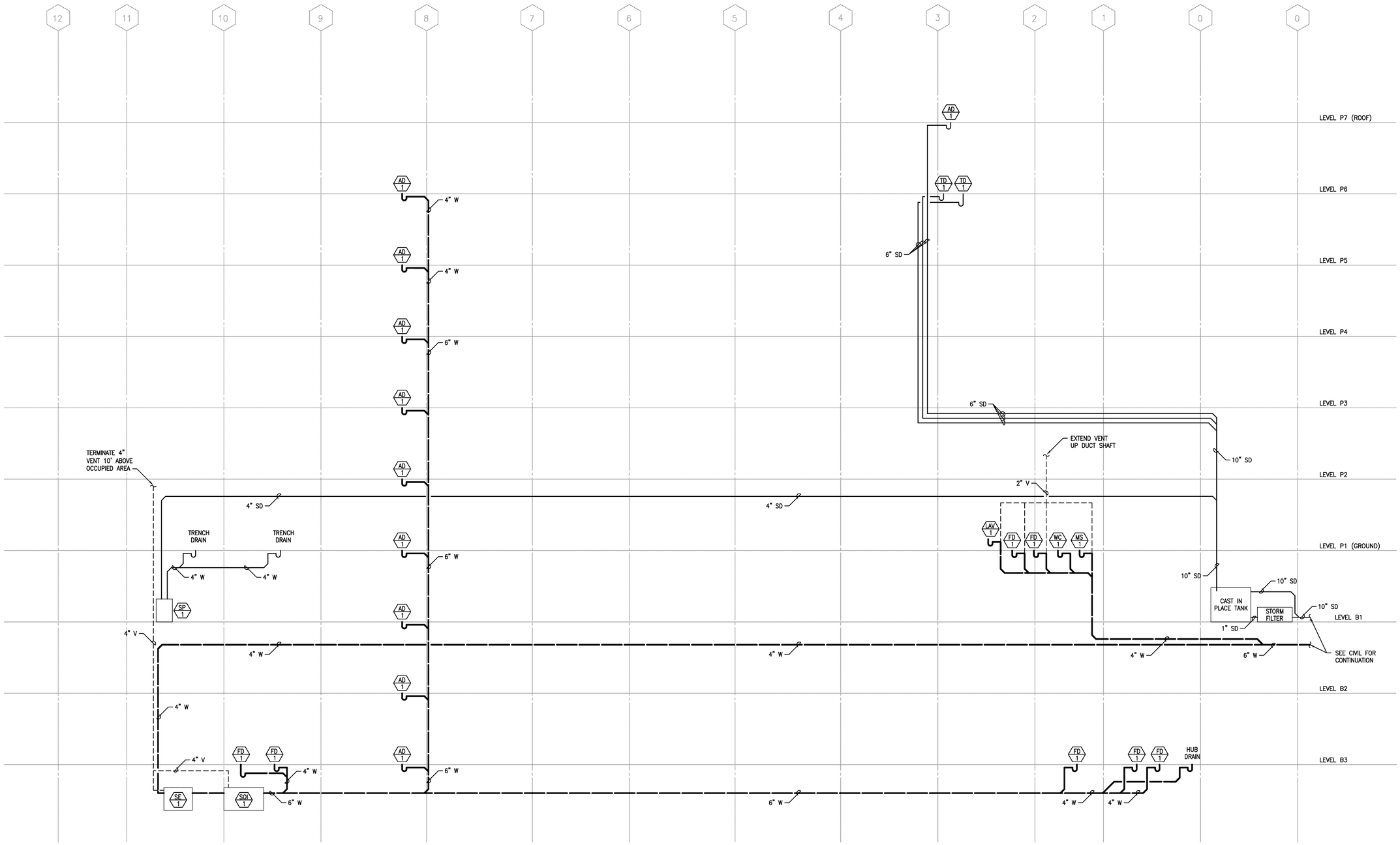


## PLUMBING RISER DIAGRAM

NO SCALE

P4.1 1

**County of San Diego**
**Cedar & Kettner**
**Development Project**
San Diego, California

McCARTHY

20401 S.W. BIRCH STREET SUITE 300
Newport Beach, California 92660

Architect

IPD

Alameda
Irvine
Los Angeles

Architecture / Engineering / Consulting
www.ipd-global.com

2 Faraday, Suite 101, Irvine CA 92618
Phone 949 595 8004 Fax 949 595 8011

MA ENGINEERS

5160 Carroll Canyon Rd, Suite 200
San Diego, California 92121
Consulting Mechanical Engineers
858 200-0030 858 200-0037
www.ma-engr.com

REGISTERED PROFESSIONAL ENGINEER
MICHAEL R. AKINS
No. 27119
MECHANICAL
EXP. 6-30-15
STATE OF CALIFORNIA
5415

| Revision | Date |
|---|---|
| 100% DESIGN DEVELOPMENT | 10/23/13 |
| 90% CDs - 1ST PLAN CHECK | 12/24/13 |
| 2ND PLAN CHECK | 04/23/14 |

| | |
|---|---|
| Date | |
| IPD Job No. | 13-813 |
| Drawn By | HT |
| Checked By | JC |
| Scale | NO SCALE |

CONSTRUCTION DOCUMENTS

Drawing Title
PLUMBING RISER DIAGRAM

Drawing No.
**P4.1**

IPD, Inc.

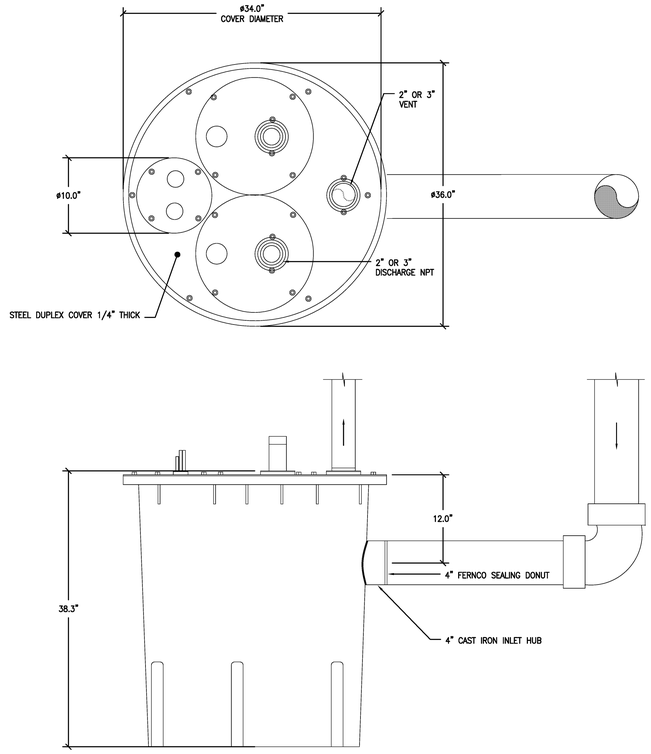


## DUPLEX PUMP SYSTEM DETAIL

NO SCALE

P5.1 (2)

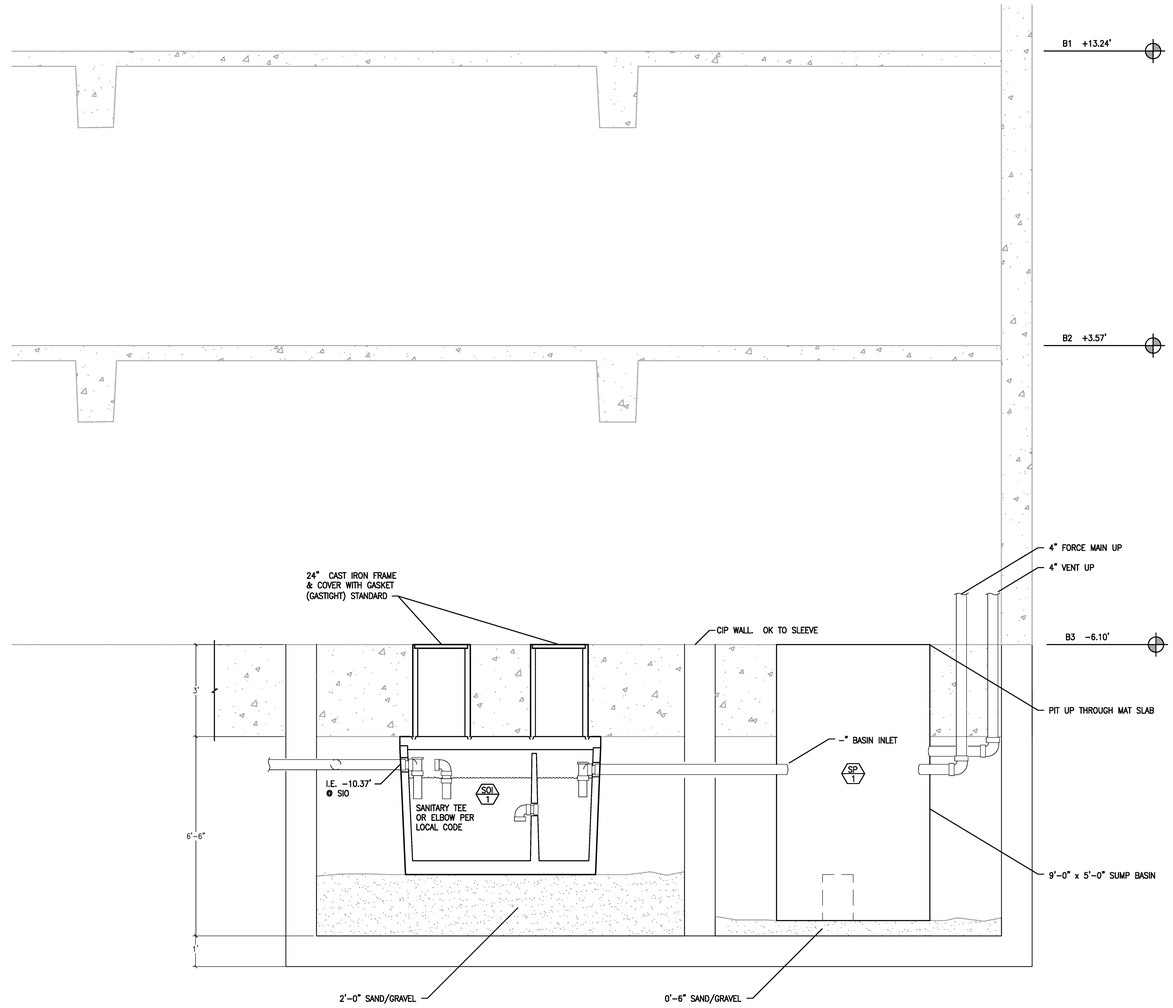


ELEVATION VIEW (CUT AWAY)

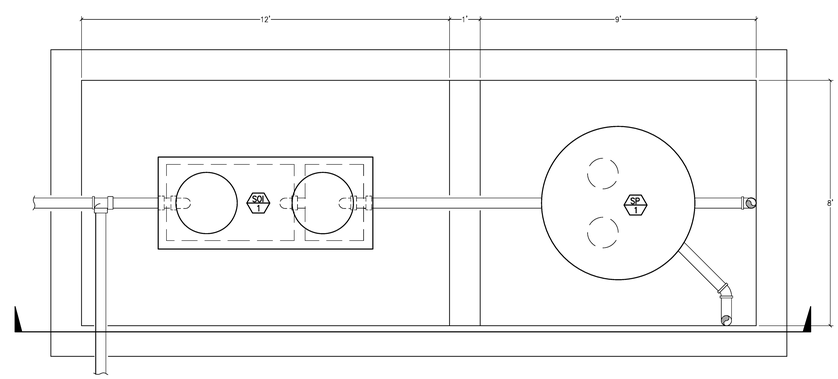


PLAN VIEW

## DETAIL

NO SCALE

P5.1 (3)

## VAULT AT PERIMETER WALL DETAIL

NO SCALE

P5.1 (1)

County of San Diego
Cedar & Kettner
Development Project
San Diego, California

McCARTHY

20401 S.W. BIRCH STREET SUITE 300
Newport Beach, California 92660

Architect

IPD

Alameda
Irvine
Los Angeles

Architecture / Engineering / Consulting
www.ipd-global.com

2 Faraday, Suite 101, Irvine CA 92618
Phone 949 595 8004 Fax 949 595 8011

MA ENGINEERS

5160 Carroll Canyon Rd, Suite 200
San Diego, California 92121
Consulting Mechanical Engineers
P 858 200-0030 F 858 200-0037
www.ma-engr.com

REGISTERED PROFESSIONAL ENGINEER
MICHAEL R. AKERS
No. 27119
MECHANICAL
EXP. 6-30-13
STATE OF CALIFORNIA
5415

| Revision | Date |
|---|---|
| 100% DESIGN DEVELOPMENT | 10/23/13 |
| 90% CDs - 1ST PLAN CHECK | 12/24/13 |
| 2ND PLAN CHECK | 04/23/14 |

| | |
|---|---|
| Date | |
| IPD Job No. | 13-813 |
| Drawn By | HT |
| Checked By | JC |
| Scale | NO SCALE |

CONSTRUCTION DOCUMENTS

Drawing Title

PLUMBING DETAILS

Drawing No.

P5.1

IPD, Inc.

# GENERAL NOTES

**SECTION 1: GENERAL**

1-1 CODE OF REFERENCE: ALL WORK SHALL CONFORM TO THE STANDARDS OF 2010 CALIFORNIA BUILDING CODE (CBC). ASTM STANDARDS REFERENCED ON THESE DRAWINGS SHALL BE OF THE LATEST EDITION.

1-2 STRUCTURAL OBSERVATION AND SPECIAL INSPECTION REQUIREMENTS ARE LISTED IN SECTIONS 13 AND 14.

1-3 CONTRACTOR COORDINATION/VERIFICATION: THE CONTRACTOR SHALL VERIFY ALL DIMENSIONS AND JOB SITE CONDITIONS. ANY DISCREPANCIES WITH THE SITE OR ON THE DRAWINGS SHALL BE BROUGHT TO THE ATTENTION OF THE ARCHITECT PRIOR TO CONSTRUCTION.

IF A PARTICULAR FEATURE OF CONSTRUCTION IS NOT FULLY SHOWN ON THE DRAWINGS OR IN THE SPECIFICATIONS, THEN IT SHALL BE CONSTRUCTED IN THE SAME CHARACTER AS SIMILAR CONDITIONS THAT ARE SHOWN IN THE DESIGN DOCUMENTS, AND SHALL BE REVIEWED BY THE ARCHITECT.

CONDITIONS NOTED IN THE DRAWINGS AS "EXISTING" SHALL BE FIELD VERIFIED BY THE CONTRACTOR. IF THERE ARE DISCREPANCIES, THE CONTRACTOR SHALL HAVE CONDITIONS NOTED AND IMMEDIATELY NOTIFY THE ENGINEER AND NOT PROCEED WITH CONSTRUCTION UNTIL FURTHER DIRECTION IS PROVIDED.

1-4 CONSTRUCTION METHODS: THE DRAWINGS AND SPECIFICATIONS REPRESENT THE FINISHED STRUCTURE, AND, UNLESS SPECIFICALLY NOTED OTHERWISE, DO NOT SHOW THE METHOD OF CONSTRUCTION. THE CONTRACTOR IS RESPONSIBLE FOR THE METHOD OF CONSTRUCTION, AND SHALL PROVIDE ALL MEASURES NECESSARY TO PROTECT THE PUBLIC.

1-5 OPENINGS IN STRUCTURAL ELEMENTS: OPENINGS, POCKETS, ETC. SHALL NOT BE PLACED IN SLABS, BEAMS, COLUMNS, WALLS, FOOTINGS, ETC., UNLESS SPECIFICALLY SHOWN ON THE STRUCTURAL DRAWINGS.

THE CONTRACTOR SHALL SUBMIT TO THE ENGINEER THE SIZES AND LOCATIONS OF ALL OPENINGS, POCKETS, ETC. TO BE DRILLED, CORED OR CUT IN SLABS, BEAMS, COLUMNS, WALLS, FOOTINGS, ETC. PRIOR TO INSTALLATION. THE CONTRACTOR SHALL TAKE ALL MEASURES NECESSARY TO AVOID DAMAGING CONCRETE OR MASONRY REINFORCEMENT.

1-6 DESIGN CRITERIA: THE STRUCTURE HAS BEEN DESIGNED FOR THE FOLLOWING CRITERIA:

LIVE LOADS:
PARKING LEVELS .......................40 PSF REDUCIBLE
ROOF ..........................................20 PSF REDUCIBLE

SEISMIC CRITERIA:
OCCUPANCY CATEGORY II
SEISMIC DESIGN CATEGORY D
SITE CLASS C
$S_S$ = 1.57 $S_{DS}$ = 1.05
$S_1$ = 0.61 $S_{D1}$ = 0.53
IMPORTANCE FACTOR = 1.0
LATERAL FORCE PROCEDURE = STATIC

BASIC SEISMIC FORCE RESISTING SYSTEM: SPECIAL REINF CONC SHEAR WALL
R: 6
TOTAL BUILDING WEIGHT: 29,700 KIPS
Cs:
NORTH-SOUTH 0.148
EAST-WEST 0.113
DESIGN BASE SHEAR:
NORTH-SOUTH 4,415 KIPS
EAST-WEST 3,350 KIPS

WIND CRITERIA:
BASIC WIND SPEED 85 MPH
EXPOSURE D
DIRECTIONALITY FACTOR I = 0.85
IMPORTANCE FACTOR = 1.0

1-7 TYPICAL DETAILS: SEE SHEETS S4.1, S4.2, S4.3, & S4.5

1-8 THESE STRUCTURAL DRAWINGS SHALL BE USED IN CONJUNCTION WITH THE STRUCTURAL SPECIFICATIONS FOR THIS PROJECT. IF THERE ARE ANY DISCREPANCIES, THE CONTRACTOR SHALL IMMEDIATELY NOTIFY THE STRUCTURAL ENGINEER AND NOT PROCEED WITH CONSTRUCTION UNTIL FURTHER DIRECTION OR CLARIFICATION IS PROVIDED BY THE STRUCTURAL ENGINEER.

**SECTION 2: FOUNDATIONS**

2-1 GEOTECHNICAL REPORT: FOUNDATIONS BASED ON RECOMMENDATIONS IN THE FOLLOWING REPORT:

COMPANY: GEOFORCE ENGINEERING AND CONSTRUCTION SERVICES
PROJECT NUMBER: GF13596
DATE: OCTOBER 16, 2013

2-2 GRADING AND SITEWORK: ALL SOILS WORK SHALL BE DONE IN ACCORDANCE WITH THE GEOTECHNICAL REPORT.

2-3 GEOTECHNICAL ENGINEER'S REVIEW: THE GEOTECHNICAL ENGINEER SHALL REVIEW THE FOLLOWING WORK, AND SUBMIT TO THE ARCHITECT AND BUILDING DEPARTMENT A LETTER OF COMPLIANCE:

A. THE BUILDING PAD WAS PREPARED IN ACCORDANCE W/ THE SOILS REPORT
B. THE UTILITY TRENCHES HAVE BEEN PROPERLY BACKFILLED AND COMPACTED
C. THE FOUNDATION EXCAVATIONS COMPLY W/ THE INTENT OF THE SOILS REPORT

2-4 BEARING PRESSURE: FOOTINGS DESIGNED FOR BEARING PRESSURE OF _ KSF SEE DETAIL __/_____ FOR MINIMUM EMBEDMENT.

**SECTION 3: CONCRETE**

3-1 MATERIALS:

A. AGGREGATES: AGGREGATE FOR NORMAL-WEIGHT CONCRETE SHALL CONFORM TO ASTM C-33. COARSE AGGREGATE SIZE SHALL BE NO. 467 (1-1/2" TO NO. 4) OR NO. 57 (1" TO NO. 4) FOR FOOTINGS AND MASS CONCRETE, AND NO. 57 OR NO. 67 (3/4" TO NO. 4) FOR ALL OTHER CONCRETE. 3/8" AGGREGATE MAY BE USED WITH THE ENGINEER'S REVIEW.

AGGREGATE FOR LIGHT-WEIGHT CONCRETE SHALL CONFORM TO ASTM C-330. COARSE AGGREGATE SIZE SHALL BE NO. 57 OR NO. 67.

AGGREGATES SHALL NOT CONTAIN MATERIAL WHICH ARE ALKALI REACTIVE AS DETERMINED BY ASTM C-227, 289 AND 295. IF TEST DATA IS UNAVAILABLE IN REGARDS TO ALKALI REACTIVE MATERIALS, PROVIDE CEMENT WITH A MAXIMUM ALKALI CONTENT LESS THAN 0.45% BY WEIGHT, OR PROVIDE FLY ASH PER NOTE 3-1,C.

B. CEMENT: CEMENT SHALL CONFORM TO ASTM C-150, TYPE II OR TYPE II-LOW ALKALI. CEMENT IN CONTACT WITH SOIL OR IRRIGATION WATER SHALL CONFORM TO THE RECOMMENDATIONS OF THE GEOTECHNICAL REPORT.

C. FLY ASH: FLY ASH MAY BE USED TO OFFSET CEMENT ON A 1 TO 1 BASIS (BY WEIGHT). FLY ASH SHALL CONFORM TO ASTM C-618, CLASS F. MAXIMUM LOSS ON IGNITION SHALL NOT EXCEED 3.0%. IF USED, CLASS F FLY ASH SHALL BE AT LEAST 20%, BUT NOT EXCEED 25% OF THE CEMENT BY WEIGHT AND SHALL CONTAIN A MAXIMUM OF 7% CALCIUM OXIDE.

D. ADMIXTURES: NO ADMIXTURE MAY CONTAIN CALCIUM CHLORIDE, OR MORE THAN 0.05% CHLORIDE IONS.

3-2 MIX DESIGNS:

A. SUBMITTALS: ALL CONCRETE MIX DESIGNS SHALL BE PREPARED BY AN ENGINEER LICENSED IN THE STATE OF CALIFORNIA, AND STAMPED & SIGNED COPIES SHALL BE SENT TO THE STRUCTURAL ENGINEER OF RECORD FOR REVIEW.
COMPRESSIVE STRENGTH TESTS SHALL ALSO INCLUDE TEST RESULTS FOR SLUMP AND ENTRAINED AIR (IF SPECIFIED), AND SHALL BE SENT TO THE ENGINEER FOR REVIEW.

B. MIX REQUIREMENTS:
1. ALL CONCRETE SHALL CONTAIN A WATER REDUCING ADMIXTURE, AND A MINIMUM OF 5 SACKS OF CEMENT PER CUBIC YARD.
2. ALL CONCRETE IN CONTACT WITH SOIL SHALL MEET THE REQUIREMENTS OF ACI 318 TABLE 4.3.1 FOR EXPOSURE CLASS C1.
3. ALL CONCRETE IN CONTACT WITH SOIL BELOW ELEVATION (+) 6.0 FT MSL SHALL MEET THE REQUIREMENTS OF ACI 318 TABLE 4.3.1 EXPOSURE CLASS C2. WHICH INCLUDES MIN F'c = 5000 PSI AND MAX WATER-TO-CEMENT RATION OF 0.40.

**SECTION 3: CONCRETE (CON'T)**

C. CONCRETE FOR POST-TENSIONED SLABS & BEAMS SHALL HAVE:
1. MAXIMUM WATER TO CEMENT RATIO OF 0.45
2. EXPOSED SLABS SHALL HAVE 1.5 LBS PER CUBIC YARD FIBERMESH

3-3 PERFORMANCE REQUIREMENTS:

A. MINIMUM COMPRESSION STRENGTHS:

| ITEM | | STRENGTH (PSI) | DAYS |
|---|---|---|---|
| POST-TENSIONED SLABS AND BEAMS: | | 5000<br>3000 | 56<br>3 |
| TYPICAL COLUMNS: | | PER SCHEDULE | |
| BASEMENT WALLS: | B3-B2<br>B2-P1 | 5000<br>4000 | 56<br>28 |
| SHEAR WALLS: | | PER ELEVATION | 28 |
| ALL OTHER CONCRETE, UNLESS SPECIFICALLY NOTED: | | 3000 | 28 |

B. SLUMP: 4" +/- 1".
C. CONCRETE DENSITY: 150 PCF MAXIMUM
D. SHRINKAGE: SHRINKAGE AT 28 DAYS (PER ASTM C-157) SHALL NOT EXCEED 0.055% FOR DRY CURING.

3-4 COMPRESSION TEST SAMPLES: SAMPLES SHALL BE PER CBC SECTION 1905.6, "EVALUATION AND ACCEPTANCE OF CONCRETE". EACH SAMPLE SHALL CONTAIN AT LEAST FOUR CYLINDERS, INCLUDING ONE FOR TESTING AT SEVEN DAYS AND TWO AT 28 DAYS. IF THE 28 DAY RESULTS ARE BELOW THE MINIMUM SPECIFIED 28 DAY STRENGTH, THE EXTRA CYLINDER SHALL BE TESTED AT 56 DAYS.

3-5 CONSTRUCTION JOINTS: THE HARDENED CONCRETE SURFACE AT CONSTRUCTION JOINTS SHALL HAVE A ROUGHNESS OF 1/4" AMPLITUDE, UNLESS SPECIFICALLY NOTED.

3-6 EMBEDDED ITEMS: ALL REBAR, PRESTRESSING TENDONS, ANCHOR BOLTS, STEEL EMBEDS AND OTHER EMBEDDED ITEMS SHALL BE SECURELY POSITIONED PRIOR TO PLACING CONCRETE. STEEL EMBEDS SHALL CONTAIN DRILLED HOLES FOR NAILS OR BOLTS FOR PLACEMENT.

3-7 CHAMFERS: ALL PROJECTING CORNERS OF BEAMS, SLABS, COLUMNS, ETC. SHALL BE FORMED WITH A 3/4" CHAMFER, UNLESS SPECIFICALLY NOTED OTHERWISE.

3-8 CONCRETE PUMP HOSES: PROVIDE INDEPENDENT SUPPORTS SO HOSES DO NOT REST ON SLAB REINFORCEMENT.

3-9 SLAB CONDUIT: UNLESS SPECIFICALLY NOTED OTHERWISE, CONDUIT OR EMBEDDED PIPE SIZE (OUTSIDE DIAMETER) SHALL NOT EXCEED 1/3 OF THE SLAB THICKNESS, AND SHALL BE LOCATED WITHIN THE CENTER 1/3 OF THE SLAB. CONDUIT AND PIPES SHALL BE SPACED AT LEAST THREE DIAMETERS ON CENTER (USE LARGEST DIAMETER).

THE ELECTRICAL CONTRACTOR SHALL SUBMIT SHOP DRAWINGS WHICH CONTAIN PROPOSED CONDUIT LAYOUTS FOR THE STRUCTURAL ENGINEER'S REVIEW A MINIMUM OF TWO WEEKS PRIOR TO INSTALLATION.

3-10 REBAR DAMAGE: NO DRILLING, CORING, OR POWDER SHOTS SHALL BE PLACED IN CONCRETE THAT MAY DAMAGE OR CONTACT ANY REBAR. THE GENERAL CONTRACTOR IS RESPONSIBLE FOR COORDINATING THE LOCATIONS OF ALL SLAB PENETRATIONS WITH REBAR DAMAGE POTENTIAL.

**SECTION 5: MASONRY**

5-1 CONCRETE MASONRY UNITS: UNITS SHALL CONFORM TO ASTM C90, GRADE N, TYPE I, AND SHALL BE SINGLE OR DOUBLE OPEN END BOND BEAM UNITS.

5-2 COMPRESSIVE STRENGTH: COMPRESSIVE STRENGTH OF INDIVIDUAL ELEMENTS OF CMU CONSTRUCTION SHALL EQUAL OR EXCEED THE SPECIFIED OVERALL f'm.
A. OVERALL f'm: 1500 PSI.
B. GROUT: 2000 PSI MINIMUM AT 28 DAYS.
C. MORTAR (TYPE S): 1800 PSI MINIMUM AT 28 DAYS.

5-3 COMPRESSION TESTING: f'm SHALL BE DETERMINED BY PRISM TESTION PER CBC SECTION 2105.3

5-4 GROUTING REQUIREMENTS:
A. GROUT EXTENT: FILL ALL CELLS.
B. HIGH-LIFT PROCEDURE: FOR BLOCK LIFTS OVER FIVE FEET, PROVIDE CLEANOUTS AT EVERY BOTTOM CELL. TOTAL GROUT LIFT SHALL NOT EXCEED 6'-0", AND TOTAL POUR DEPTH SHALL NOT EXCEED ACI 530-05 TABLE 1.16.1.
C. ALL GROUT SHALL CONTAIN "GROUT AID" OR EQUAL.

5-5 REINFORCING STEEL: SEE SECTION 6, "REINFORCING STEEL", EXCLUDING CLEAR COVERAGE REQUIREMENTS. REBAR POSITIONERS ARE REQUIRED PER 2/S4.5

5-6 REBAR LAPS: LAP THE GREATER OF (60) BAR DIAMETERS OR 2'-0", UNLESS SPECIFICALLY NOTED.

5-7 ANCHORS: LOCATE ANCHOR BOLTS AND SLEEVE ANCHORS WITHIN 2" OF THE CENTER OF A CELL.

5-8 SHOP DRAWINGS: MASONRY CONTRACTOR SHALL PROVIDE REBAR SHOP DRAWINGS.

5-9 ELECTRICAL CONDUIT SHALL NOT OCCUPY MASONRY CELLS WITH REBAR.

5-10 ELECTRICAL CONDUIT SHALL BE LIMITED TO ONE PER MASONRY CELL AND SHALL NOT EXCEED 1.5 INCHES OUTSIDE DIAMETER

**SECTION 6: REINFORCING STEEL**

6-1 MATERIALS: REINFORCING STEEL SHALL BE ASTM A-615 GRADE 60. SHEARWALL CHORD REINFORCING (EXCLUDING TIES) SHALL BE ASTM A-706 OR SHALL MEET THE FOLLOWING REQUIREMENTS:

A. ACTUAL YIELD STRENGTH SHALL NOT EXCEED SPECIFIED YIELD STRENGTH BY MORE THAN 18 KSI (RETESTS SHALL NOT EXCEED THIS VALUE BY AN ADDITIONAL 3 KSI).

B. THE RATIO OF THE ACTUAL TENSILE ULTIMATE STRENGTH TO THE ACTUAL TENSILE YIELD STRENGTH SHALL NOT BE LESS THAN 1.25

REINFORCING STEEL THAT IS TO BE WELDED SHALL CONFORM TO ASTM A-706, UNLESS SPECIFICALLY NOTED OTHERWISE. OTHER GRADES, IF ALLOWED, SHALL HAVE A MAXIMUM CARBON EQUIVALENT OF 0.65%. WELDING ELECTRODES SHALL BE LOW - HYDROGEN, AND SHALL BE E90XX FOR 60 GRADE REINFORCING STEEL, AND E70XX FOR 40 GRADE.

WIRE MESH SHALL CONFORM TO ASTM A-185.

6-2 SHOP DRAWINGS: NO REINFORCING STEEL SHALL BE PLACED UNTIL SHOP DRAWINGS THAT HAVE BEEN REVIEWED BY THE ENGINEER HAVE BEEN RECEIVED ON THE JOB SITE.

SHOP DRAWINGS SHALL CONTAIN ALL INFORMATION NECESSARY FOR CORRECTLY PLACING ALL REINFORCING STEEL WITHOUT REFERRAL TO THE STRUCTURAL DRAWINGS. SHOP DRAWINGS SHALL NOT CONTAIN ANY REPRODUCTIONS OF THE STRUCTURAL DRAWINGS.

6-3 CLEAR COVERAGE: CONCRETE CLEAR COVERAGE TO REINFORCING STEEL SHALL CONFORM TO THE FOLLOWING MINIMUMS, UNLESS SPECIFICALLY NOTED OTHERWISE:

A. CAST-IN-PLACE CONCRETE:
1. CONCRETE CAST AGAINST AND PERMANENTLY EXPOSED TO SOIL - 3"
2. CONCRETE WITH SOIL OR WEATHER EXPOSURE:
A. #5 BARS AND SMALLER - 1 1/2"
B. #6 BARS AND LARGER - 2"
3. CONCRETE WITHOUT SOIL OR WEATHER EXPOSURE:
A. SLABS, WALLS, AND JOISTS:
1. #11 BARS AND SMALLER - 3/4"
2. #14 BARS AND LARGER - 1 1/2"
B. COLUMNS AND BEAMS - TO PRIMARY REINFORCEMENT, TIES, STIRRUPS, AND SPIRALS - 1 1/2"

B. PRECAST CONCRETE (PLANT CONTROL CONDITIONS):
1. CONCRETE WITH SOIL OR WEATHER EXPOSURE:
A. WALL PANELS:
1. #11 BARS AND SMALLER - 3/4"
2. #14 BARS AND LARGER - 1 1/2"
B. OTHER MEMBERS:
1. #5 BARS AND SMALLER - 1 1/4"
2. #6 THRU #11 BARS - 1 1/2"
3. #14 BARS AND LARGER - 2"

**SECTION 6: REINFORCING STEEL (CON'T)**

C. PRESTRESSED CONCRETE:
1. CONCRETE CAST AGAINST AND PERMANENTLY EXPOSED TO SOIL - 3"
2. CONCRETE WITH SOIL OR WEATHER EXPOSURE:
A. WALL PANELS, SLABS, JOISTS - 1"
B. OTHER MEMBERS - 1 1/2"
3. CONCRETE WITHOUT SOIL OR WEATHER EXPOSURE:
A. SLABS, WALLS, AND JOISTS - 3/4"
B. COLUMNS AND BEAMS:
1. TIES, STIRRUPS, AND SPIRALS - 1"
2. PRIMARY REINFORCEMENT - 1 1/2"

6-4 LAP SPLICES: REINFORCING BARS SHALL BE LAPPED AT LENGTHS AND LOCATIONS SHOWN ON THE DRAWINGS. ADDITIONAL LAPS SHALL BE REVIEWED BY THE ENGINEER.

WIRE MESH SHALL BE LAPPED ONE WIRE SPACE PLUS 2" (8" MINIMUM) BETWEEN OUTERMOST CROSS WIRES OF ADJACENT SHEETS.

6-5 FIELD BENDING: FIELD BENDING OF REINFORCING BARS SHALL BE REVIEWED BY THE ENGINEER. BENDING OF #8 BARS AND SMALLER SHALL BE MADE COLD. BENDING OF #8, #9, AND #10 BARS MAY BE UNIFORMLY PREHEATED TO 1400 TO 1600 DEGREES F. AND BENT PER CRSI RECOMMENDATIONS.

6-6 REBAR DAMAGE: NO DRILLING, CORING, OR POWDER SHOTS SHALL BE PLACED IN THE POST-TENSIONED SLAB THAT MAY DAMAGE OR CONTACT ANY REBAR. THE GENERAL CONTRACTOR IS RESPONSIBLE FOR COORDINATING THE LOCATIONS OF ALL SLAB PENETRATIONS WITH REBAR DAMAGE POTENTIAL.

**SECTION 7: STRUCTURAL STEEL**

7-1 STANDARDS: ALL STRUCTURAL STEEL FRAMING SHALL BE DETAILED, FABRICATED, AND ERECTED PER THE THIRTEENTH EDITION AISC SPECIFICATIONS AND CODE OF STANDARD PRACTICE, EXCEPT AS MODIFIED BY THE CBC.

7-2 MATERIALS:

A. STRUCTURAL STEEL: ROLLED STEEL SHAPES, PLATES AND BARS SHALL CONFORM TO ASTM A-36 AND CBC STANDARDS. WIDE FLANGE SHAPES SHALL CONFORM TO ASTM A-992 GRADE 50.

B. STRUCTURAL TUBES: STRUCTURAL TUBES SHALL CONFORM TO ASTM A-500 GRADE B.

C. STRUCTURAL PIPE: STRUCTURAL PIPE SHALL CONFORM TO ASTM A-53 TYPE E OR S, GRADE B.

D. BOLTS: COMMON BOLTS, NUTS, AND WASHERS SHALL CONFORM TO ASTM A-307. HIGH STRENGTH BOLTS, NUTS, AND WASHERS SHALL CONFORM TO ASTM A-490.

E. STUD ANCHORS: HEADED STUD SHEAR CONNECTORS SHALL CONFORM TO ASTM A-108, GRADE 1015 OR 1020.

F. ANCHOR BOLTS: ANCHOR BOLTS SHALL CONFORM TO ASTM F1554 GR36.

G. STEEL EMBEDS: STEEL EMBEDS SHALL CONTAIN HOLES FOR NAILS OR BOLTS FOR PLACEMENT.

H. DEFORMED BAR ANCHORS: DEFORMED BAR ANCHORS SHALL BE NELSON TYPE D2L OR EQUIVALENT.

7-3 SUBMITTALS: SHOP AND ERECTION DRAWINGS SHALL BE SUBMITTED FOR THE ENGINEERS REVIEW PRIOR TO FABRICATION. STEEL SHALL NOT BE ERECTED UNTIL THE REVIEWED SHOP DRAWINGS ARE RECEIVED IN THE FIELD.

SHOP DRAWINGS SHALL CONTAIN ALL INFORMATION NECESSARY FOR CORRECTLY PLACING ALL REINFORCING STEEL WITHOUT REFERRAL TO THE STRUCTURAL DRAWINGS.

7-4 FABRICATION SHOP: ALL FABRICATION SHALL BE DONE IN A SHOP THAT IS ACCEPTABLE TO THE BUILDING DEPARTMENT. CONTINUOUS, FULL-TIME INSPECTION OF SHOP FABRICATION MAY BE WAIVED ONLY TO THE EXTENT APPROVED BY THE BUILDING DEPARTMENT.

7-5 BOLTED CONNECTIONS:

A. HIGH STRENGTH BOLTS: CONTACT FACES AT CONNECTIONS WITH HIGH STRENGTH BOLTS SHALL NOT BE PAINTED.

B. BEARING BOLTS: UNLESS SPECIFICALLY NOTED, ALL CONNECTIONS SHALL USE BEARING (N) TYPE BOLTS.

C. SLIP CRITICAL BOLTS: SLIP CRITICAL (SC) CONNECTIONS SHALL USE LOAD INDICATOR WASHERS PER THE MANUFACTURERS RECOMMENDATIONS.

D. MOMENT CONNECTIONS: ALL MOMENT CONNECTIONS, WHERE SHOWN ON THE PLANS, SHALL USE SLIP CRITICAL BOLTS.

7-6 WELDED CONNECTIONS:

A. WELDS: ALL WELDING SHALL BE ELECTRIC ARC WELDING AND SHALL BE PERFORMED ONLY BY EXPERIENCED, QUALIFIED WELDERS. ELECTRODES SHALL BE E60 XX FOR METAL DECK AND E70 XX OTHERWISE, UNLESS SPECIFICALLY NOTED OTHERWISE. WELDING SHALL CONFORM TO CBC SECTION 2204.

B. UNSPECIFIED WELDS: WELDS NOT SPECIFIED SHALL BE CONTINUOUS FILLET WELDS. WELD SIZE SHALL BE PER AISC SPECIFICATIONS FOR THE THICKER PART OF THE JOINT.

C. TESTING:
1. ALL GROOVE WELDS SHALL BE TESTED NON-DESTRUCTIVELY BY EITHER RADIOGRAPHY OR ULTRASONIC TESTING. TESTING RATE SHALL BE 100%, BUT MAY BE REDUCED AS ALLOWED BY THE CBC.

D. BACK-UP BARS: ALL COMPLETE PENETRATION WELD BACK-UP BARS SHALL BE REMOVED. WELD SHALL BE BACK-GOUGED, FILLED AND GROUND FLUSH, UNLESS NOTED OTHERWISE.

7-7 FABRICATION:

A. PAINT: ALL STEEL SHALL BE SHOP PAINTED, UNLESS ENCASED IN CONCRETE, GROUTED MASONRY, OR SPRAYED FIREPROOFING, UNLESS SPECIFICALLY NOTED ON THE DRAWINGS.

B. STIFFENERS: STIFFENER PLATES SHALL EXTEND THE FULL WIDTH OF THE BEAM FLANGES, UNLESS SPECIFICALLY NOTED OTHERWISE.

C. BEARING SURFACES: BASE PLATES AND COLUMN ENDS SHALL BE FINISHED PER AISC SPECIFICATIONS.

D. OPENINGS: OPENINGS SHALL NOT BE PLACED IN STEEL MEMBERS UNLESS SPECIFICALLY SHOWN ON THE STRUCTURAL DRAWINGS.

E. CONTINUITY PLATES: CONTINUITY PLATES SHALL BE CUT WITH CONCAVE QUARTER ROUNDS AT ALL WEB TO FLANGE LOCATIONS.

F. HEADED STUD ANCHORS AND DEFORMED BAR ANCHORS SHALL BE CONNECTED WITH STUD WELDING GUN. FILLET WELDS ARE NOT ACCEPTABLE.

7-8 INSTALLATION:

A. DELIVERY: ALL STEEL SHALL BE DELIVERED TO THE JOB SITE WITHOUT EXCESSIVE RUST, MILL SCALE, GREASE, ETC.

B. SHORING: AFTER ERECTION, ALL STEEL MEMBERS SHALL BE SUPPORTED DURING FIELD WELDING OR TORCHING. THE SHORES SHALL NOT BE REMOVED UNTIL THE STEEL HAS RETURNED TO AIR TEMPERATURE.

**SECTION 8: METAL DECK**

8-1 MATERIALS:

A. DECK: SHALL BE FORMED FROM STEEL SHEETS AND SHALL CONFORM TO ASTM A-446, GRADE A.

B. GALVANIZING: ALL DECK SHALL BE ZINC COATED PER ASTM A-525.

C. VENTING: ALL DECK WHICH WILL BE IN CONTACT WITH CONCRETE FILL, INSULATING CONCRETE FILL OR ANY OTHER CONCRETE PRODUCTS SHALL BE VENTED PER THE MANUFACTURER'S SPECIFICATIONS.

D. LIGHT GAGE CLOSURES: THE DECKING CONTRACTOR SHALL PROVIDE LIGHT GAGE CLOSURES FOR ALL METAL DECK WITH CONCRETE FILL.

8-2 INSTALLATION:

A. FASTENING: ALL METAL DECK SHALL BE FASTENED TO THE STRUCTURE AS INDICATED ON THE STRUCTURAL DRAWINGS.

B. INTERCONNECTION: ALL SIDE LAPS SHALL BE CONNECTED TOGETHER AS INDICATED ON THE STRUCTURAL DRAWINGS.

**SECTION 8: METAL DECK (CON'T)**

8-3 CONDUIT IN SLABS:

A. DIMENSIONS: THE MAXIMUM DIAMETER OF CONDUIT THAT CAN BE PLACED IN CONCRETE SLABS ON METAL DECK SHALL NOT EXCEED ONE-THIRD OF THE SLAB THICKNESS ABOVE THE TOP FLUTE OF THE METAL DECK.

B. LOCATION: CONDUIT RUNNING PERPENDICULAR TO THE FLUTES OF THE METAL DECK SHALL BE PLACED IN THE LOWER TWO-THIRDS OF THE SLAB THICKNESS ABOVE THE TOP FLUTE OF THE METAL DECK. CONDUIT RUNNING PARALLEL TO THE FLUTES OF THE METAL DECK MAY BE PLACED NEAR THE BOTTOM OF THE FLUTES BY MAINTAINING ONE INCH CLEAR OF ALL METAL DECK.

C. SPACING: THE MINIMUM SPACING BETWEEN INDIVIDUAL CONDUIT SHALL BE 6 INCHES.

8-4 SUBMITTALS: SHOP AND ERECTION DRAWINGS SHALL BE SUBMITTED FOR THE ENGINEER'S REVIEW PRIOR TO FABRICATION. METAL DECK SHALL NOT BE PLACED UNTIL THE REVIEWED SHOP DRAWINGS ARE RECEIVED IN THE FIELD.

SHOP AND ERECTION DRAWINGS SHALL NOT CONTAIN ANY REPRODUCTIONS OF THE STRUCTURAL DRAWINGS. SHOP DRAWINGS SHALL BE COMPLETE AND STAND ALONE, SUCH THAT THEY DO NOT REFER TO THE STRUCTURAL DRAWINGS.

THE ELECTRICAL CONTRACTOR SHALL SUBMIT SHOP DRAWINGS WHICH CONTAIN PROPOSED CONDUIT LAYOUTS FOR THE STRUCTURAL ENGINEER'S REVIEW A MINIMUM OF TWO WEEKS PRIOR TO INSTALLATION.

**SECTION 10: POST-TENSIONED CONCRETE**

10-1 MATERIALS:

A. TENDONS: PRESTRESSING TENDONS SHALL BE UNCOATED, SEVEN-WIRE LOW RELAXATION STEEL STRAND, AND SHALL CONFORM TO ASTM A-416, GRADE 270. TENDONS SHALL BE 1/2" NOMINAL DIAMETER, WITH AN AREA OF 0.153 SQUARE INCHES.

B. HARDWARE: ANCHORAGE AND COUPLING HARDWARE SHALL CONFORM TO THE REQUIREMENTS OF ACI 318 AND THE POST-TENSIONING INSTITUTE'S GUIDELINE SPECIFICATIONS.
PROVIDE ENCAPSULATING ACCESSORIES, TYP. AT ALL ANCHORAGE.

C. MISCELLANEOUS: SHEATHING, GREASE, TAPE, ETC. SHALL CONFORM TO THE REQUIREMENTS OF PTI SPECIFICATIONS.

10-2 SUBMITTALS:

A. SHOP DRAWINGS: LAYOUT AND SUPPORT BAR SHOP DRAWINGS SHALL BE SUBMITTED FOR THE ENGINEER'S REVIEW PRIOR TO FABRICATION. LAYOUT DRAWINGS SHALL INDICATE ALL TENDONS WHICH ARE TO BE STRESSED FROM ONLY ONE END. FIELD PLACEMENT SHALL NOT BEGIN UNTIL THE REVIEWED SHOP DRAWINGS ARE RECEIVED IN THE FIELD.
SHOP DRAWINGS SHALL NOT CONTAIN ANY REPRODUCTIONS OF THE STRUCTURAL DRAWINGS. SHOP DRAWINGS SHALL BE COMPLETE AND STAND ALONE, SUCH THAT THEY DO NOT REFER TO THE STRUCTURAL DRAWINGS.

B. CALCULATIONS: FORCES ASSOCIATED WITH FINAL POST-TENSIONED DESIGNS ARE EFFECTIVE FORCES, AFTER ALL STRESS LOSSES. CALCULATIONS FOR THE EFFECTIVE FORCE FOR EACH TENDON SHALL BE SUBMITTED TO THE ENGINEER FOR REVIEW.

CALCULATIONS SHALL INCLUDE THE EFFECTS OF LONG TERM STRESS LOSSES DUE TO ELASTIC SHORTENING, CREEP, SHRINKAGE, AND TENDON RELAXATION, ASSUMING AN AVERAGE ANNUAL AMBIENT RELATIVE HUMIDITY OF 70%. SHORT TERM STRESS LOSSES DUE TO ANCHOR SLIPPAGE AND FRICTION SHALL ALSO BE CONSIDERED. FRICTION LOSSES MAY NOT BE CONSIDERED TO REDISTRIBUTE ALONG THE LENGTH OF THE TENDON, AND THE EFFECTIVE FORCE SHOWN IS THE MINIMUM REQUIREMENT ALONG THE LENGTH OF THE TENDON.

WOBBLE AND CURVATURE VALUES ASSUMED IN THE CALCULATIONS SHALL BE FIELD VERIFIED.

C. POST-TENSIONED CABLE QUANTITIES AND LAYOUT INDICATED ON STRUCTURAL DRAWINGS ARE BASED ON 26.4 KIPS PER CABLE

10-3 INSTALLATION:

A. TYPICAL DETAILS: FOR POST-TENSIONING DETAILS, SEE SHEET S4.2

B. SUPPORT BARS: SUPPORT BARS SHALL BE #4 OR LARGER AND SPACED AT A MAXIMUM OF 4'-0" ON CENTER, WITH 2'-0" MINIMUM LAP SPLICES.

C. TENDON SECURING: TENDONS AND SUPPORT BARS SHALL BE FIRMLY ANCHORED TO PREVENT DISPLACEMENT FROM SPECIFIED VERTICAL AND HORIZONTAL POSITIONS. ALL SUPPORT BARS SHALL BE CHAIRED AT EACH TENDON.

CONCRETE WILL BE PLACED SO AS TO NOT DISTURB TENDON PLACEMENT. ANY TENDON DISPLACED DURING CONCRETE PLACEMENT SHALL BE MOVED BACK TO THE SPECIFIED PROFILE IMMEDIATELY.

D. TENDONS AT COLUMNS: IN FLAT PLATE CONSTRUCTION, A MINIMUM OF TWO TENDONS SHALL BE PLACED OVER EACH COLUMN IN EACH DIRECTION. IN CASE OF CONFLICT, TENDON VERTICAL ORDINATES FOR BANDED TENDONS SHALL GOVERN OVER DISTRIBUTED TENDONS.

E. TENDON INTERFERENCE: WHEN PERPENDICULAR TENDONS REQUIRE THE SAME VERTICAL ORDINATE AT THE SAME LOCATION, ONE TENDON MAY BE MOVED HORIZONTALLY TO AVOID THE INTERFERENCE.

THE SPECIFIED TENDON PROFILE GOVERNS WHEN REBAR OR CONDUITS INTERFERE WITH ANY TENDONS.

F. SHEATHING REPAIR: ANY SHEATHING DAMAGE LONGER THAN ONE INCH, AND ALL SHEATHING TO STRESSING ANCHOR CONNECTIONS SHALL BE WRAPPED WITH TAPE TO PREVENT CEMENT SEEPAGE INTO THE TENDON OR ANCHOR.

G. TENDON BAND ANCHORAGE: TENDON BANDS (GROUPS OF 3 OR MORE) REQUIRE SPECIAL SLAB REINFORCEMENT. SEE DETAIL 5/S4.2

H. CLEAR COVER: TENDONS SHALL CLEAR OPENINGS PER DETAIL 6/S4.2

10-4 STRESSING:

A. OPERATOR EXPERIENCE: ALL STRESSING OPERATIONS SHALL BE UNDER THE IMMEDIATE CONTROL OF A PERSON EXPERIENCED IN THIS TYPE OF WORK.

B. CONCRETE STRENGTH: STRESSING SHALL NOT COMMENCE UNTIL THE CONCRETE HAS REACHED AT LEAST 3000 PSI, AS INDICATED BY FIELD CURED COMPRESSION CYLINDERS.

C. CALIBRATION: EACH HYDRAULIC JACK SHALL BE CALIBRATED WITH AN ACCURATE READING PRESSURE GAUGE. EACH UNIT SHALL HAVE A CERTIFIED CALIBRATION SHEET. IF THE MEASURED ELONGATIONS BECOME INCONSISTENT, THE UNIT SHALL BE RECALIBRATED.

D. JACKING FORCE: THE MAXIMUM JACKING FORCE SHALL NOT EXCEED 80% OF THE TENDON'S SPECIFIED TENSILE FORCE, NOR 94% OF THE TENDON'S SPECIFIED YIELD FORCE. THE MAXIMUM FORCE IN THE TENDON AFTER ANCHORAGE SHALL BE 70% OF THE SPECIFIED TENSILE FORCE.

E. ELONGATIONS: THE MEASURED TENDON ELONGATIONS SHALL BE WITHIN 7% OF THE CALCULATED ELONGATIONS, OR WITHIN 1/8" FOR SHORT TENDONS. IF THE ELONGATIONS CONSISTENTLY EXCEED THIS LIMIT, RECALIBRATE THE JACK UNIT.

F. STRESSING SEQUENCE:
1. ALL TEMPERATURE TENDONS
2. ALL THROUGH SLAB (DISTRIBUTED) TENDONS.
3. ALL BEAM TENDONS, EXCEPT GIRDERS.
4. ALL GIRDER TENDONS.
5. ALL ADDED TENDONS.

G. TWO-WAY TENDON PULLS: FULL JACK FORCE SHALL BE APPLIED AT EACH END OF A TWO-WAY PULL. THE ANCHOR WEDGES AT THE OPPOSITE END OF THE PULL MUST BE FULLY SEATED AND CAUSE NO TENDON SLIPPAGE. THE TOTAL TENDON ELONGATION IS THE SUM OF THE ELONGATIONS AT EACH END.

H. SAFETY: TAKE ALL NECESSARY SAFETY PRECAUTIONS. DO NOT ALLOW ANYBODY TO STAND BEHIND JACKS DURING STRESSING.

**SECTION 10: POST-TENSIONED CONCRETE (CON'T)**

10-5 TENDON DAMAGE: NO DRILLING, CORING, OR POWDER SHOTS SHALL BE PLACED IN THE POST-TENSIONED SLAB THAT MAY DAMAGE OR CONTACT ANY TENDONS. THE GENERAL CONTRACTOR IS RESPONSIBLE FOR COORDINATING THE LOCATIONS OF ALL SLAB PENETRATIONS WITH TENDON DAMAGE POTENTIAL.

**SECTION 13: STRUCTURAL OBSERVATION**

13-1 STRUCTURAL OBSERVATION IS REQUIRED FOR THE STRUCTURAL SYSTEM IN ACCORDANCE WITH CBC SECTION 1710. STRUCTURAL OBSERVATION IS THE VISUAL OBSERVATION OF THE ELEMENTS AND CONNECTIONS OF THE STRUCTURAL SYSTEM AT SIGNIFICANT CONSTRUCTION STAGES AND THE COMPLETED STRUCTURE FOR GENERAL CONFORMANCE TO TO THE APPROVED PLANS AND SPECIFICATIONS. STRUCTURAL OBSERVATION DOES NOT INCLUDE OR WAIVE THE RESPONSIBILITY FOR THE INSPECTIONS REQUIRED BY THE BUILDING INSPECTOR OR THE DEPUTY INSPECTOR.

13-2 THE OWNER SHALL EMPLOY A STRUCTURAL ENGINEER TO PERFORM THE STRUCTURAL OBSERVATION. THE ENGINEER SHALL BE REGISTERED IN THE STATE OF CALIFORNIA.

13-3 THE STRUCTURAL OBSERVER SHALL PERFORM SITE VISITS AT THOSE STEPS IN THE PROGRESS OF THE WORK THAT ALLOW FOR CORRECTION OF DEFICIENCIES WITHOUT SUBSTANTIAL EFFORT OR UNCOVERING OF THE WORK INVOLVED. AT A MINIMUM, THE FOLLOWING SIGNIFICANT CONSTRUCTION STAGES REQUIRE A SITE VISIT AND AN OBSERVATION REPORT FROM THE STRUCTURAL OBSERVER:

| CONSTRUCTION STAGES | ELEMENTS/CONNECTIONS TO BE OBSERVED |
|---|---|
| A. FOUNDATIONS | REINFORCING STEEL PRIOR TO PLACEMENT OF CONCRETE |
| B. SLABS & BEAMS | REINFORCING STEEL AND P/T LAYOUT |
| C. SHEAR WALLS | REINFORCING STEEL |

13-4 THE STRUCTURAL OBSERVER SHALL PREPARE A REPORT FOR EACH SIGNIFICANT STAGE OF CONSTRUCTION OBSERVED. COPIES OF THE REPORT SHALL BE GIVEN TO THE OWNER, CONTRACTOR AND DEPUTY INSPECTOR.

13-5 A FINAL OBSERVATION REPORT MUST BE SUBMITTED SHOWING THAT ALL OBSERVED DEFICIENCIES WERE RESOLVED AND THE STRUCTURAL SYSTEM GENERALLY CONFORMS WITH THE APPROVED PLANS AND SPECIFICATIONS. THE DEPARTMENT OF BUILDING AND SAFETY WILL NOT ACCEPT THE STRUCTURAL WORK WITHOUT THIS FINAL OBSERVATION REPORT AND THE CORRECTION OF THE SPECIFIC DEFICIENCIES NOTED DURING NORMAL BUILDING AND DEPUTY INSPECTION.

**SECTION 14: QUALITY ASSURANCE PLAN / STATEMENT OF SPECIAL INSPECTIONS**

14-1 QUALITY ASSURANCE PLAN

A. THE STRUCTURE FALL UNDER SEISMIC DESIGN CATEGORY D AS DEFINED BY THE 2010 CBC. THE SEISMIC FORCE RESISTING SYSTEM CONSISTS OF CONCRETE SHEARWALLS AS DEFINED BY ASCE 7-05

B. SPECIAL INSPECTIONS SHALL BE PERFORMED IN ACCORDANCE WITH NOTES 14-2 AND 14-3.

C. STRUCTURAL OBSERVATION IS REQUIRED PER SECTION 13.

14-2 STATEMENT OF SPECIAL INSPECTIONS

A. SPECIAL INSPECTION FOR SEISMIC RESISTANCE SHALL BE IN ACCORDANCE WITH CBC SECTION 1707

B. STRUCTURAL TESTING FORSEISMIC RESISTANCE SHALL BE IN ACCORDANCE WITH CBC SECTION 1708

14-3 SPECIAL INSPECTIONS REQUIREMENTS

A. THE SPECIAL INSPECTOR SHALL BE ACCEPTABLE TO THE STRUCTURAL ENGINEER AND BUILDING DEPARTMENT, SHALL BE ICC QUALIFIED, AND THEIR EXPERIENCE SHALL BE COMMENSURATE WITH THIS TYPE OF PROJECT.

B. TYPES AND EXTENTS OF SPECIAL INSPECTIONS AND TESTS SHALL BE IN ACCORDANCE WITH THE FOLLOWING TABLE.

| TYPE OF CONSTRUCTION | CONTINUOUS | PERIODIC | CBC SECTION | CBC TABLE |
|---|---|---|---|---|
| CONCRETE | REQUIRED | – | – | 1704.4 |
| REINFORCING STEEL | REQUIRED | – | – | 1704.4 |
| PRESTRESSING TENDONS | REQUIRED | – | – | 1704.4 |
| CONCRETE BOLTS, EMBEDS, AND DRILLED ANCHORS | REQUIRED | – | – | 1704.4 |
| WELDING OF STRUCTURAL OR REINFORCING STEEL | PER TABLE 1704.3 | PER TABLE 1704.3 | 1704.3 | 1704.3 |
| STRUCTURAL STEEL | PER TABLE 1704.3 | PER TABLE 1704.3 | 1704.3 | 1704.3 |
| STRUCTURAL MASONRY | PER TABLE 1704.5.1 | PER TABLE 1704.5.1 | – | 1704.5.1 |
| SPECIAL GRADING, EXCAVATION, OR FILLING | PER TABLE 1704.7 | PER TABLE 1704.7 | 1704.7 | 1704.7 |
| SPRAYED-ON FIREPROOFING | PER SECTION 1704.10 | PER SECTION 1704.10 | 1704.10 | – |

**SECTION 20: MISCELLANEOUS**

20-1 NON-SHRINK GROUT: NON-SHRINK GROUT SHALL BE A NON-METALLIC, PREMIXED, CEMENTITIOUS MIXTURE WITH NO SHRINKAGE AFTER PLACEMENT AND NO EXPANSION AFTER SET, PER ASTM C-827. COMPRESSIVE STRENGTH, PER ASTM C-109, SHALL BE AT LEAST 3000 PSI AT ONE DAY AND 5000 PSI AT 28 DAYS.

20-2 EXPANSION ANCHORS: EXPANSION ANCHORS IN CONCRETE SHALL BE HILTI KWIK BOLT TZ EXPANSION ANCHORS PER ICC ESR-1917 OR EQUAL. EXPANSION ANCHORS IN MASONRY SHALL BE HILTI KWIK BOLT 3 EXPANSION ANCHORS PER ICC ESR-1385 OR EQUAL.

20-3 EPOXY/ADHESIVE ANCHORS: EPOXY ADHESIVE ANCHORS IN CONCRETE OR CMU SHALL BE HILTI HIT-RE 500 SD SYSTEM ANCHORS PER ICC ESR-2322 OR EQUAL.

20-4 REINFORCING BAR TERMINATORS & COUPLERS: REINFORCING BAR TERMINATORS & COUPLERS SHALL BE LENTON PER ICC ER-3967 OR EQUAL.

20-5 FORMSAVERS: FORMSAVERS SHALL BE LENTON PER ICC ER-3967 OR EQUAL.

20-6 GENERAL CONTRACTOR SHALL KEEP A DIGITAL CAMERA ON-SITE AND PROVIDE PHOTOGRAPHS REQUESTED BY THE STRUCTURAL ENGINEER WITHIN TWO WORKING DAYS VIA ELECTRONIC MAIL.

20-7 STEEL STAIRS: STEEL STAIRS SHALL BE DESIGNED BY THE STAIR FABRICATOR PER THE REQUIREMENTS OF THE ARCHITECTURAL DRAWINGS AND THE CBC FOR A 100 PSF LIVE LOAD. CALCULATIONS AND SHOP DRAWINGS, STAMPED AND SIGNED BY AN ENGINEER LICENSED IN THE STATE OF CALIFORNIA, SHALL BE REVIEWED BY THE STRUCTURAL ENGINEER OF RECORD PRIOR TO STAIR FABRICATION.

20-8 EXTERIOR FACADE: EXTERIOR FACADE AND CONNECTIONS SHALL BE DESIGNED BY THE EXTERIOR FACADE FABRICATOR PER THE REQUIREMENTS OF THE ARCHITECTURAL DRAWINGS AND THE CBC. CALCULATIONS AND SHOP DRAWINGS, STAMPED AND SIGNED BY AN ENGINEER LICENSED IN THE STATE OF CALIFORNIA, SHALL BE REVIEWED BY THE STRUCTURAL ENGINEER OF RECORD PRIOR TO EXTERIOR FACADE FABRICATION.

20-9 ROOFTOP SHADE STRUCTURE: ROOFTOP SHADE STRUCTURE AND CONNECTIONS SHALL BE DESIGNED BY THE ROOFTOP SHADE STRUCTURE FABRICATOR PER THE REQUIREMENTS OF THE ARCHITECTURAL DRAWINGS AND THE CBC. CALCULATIONS AND SHOP DRAWINGS, STAMPED AND SIGNED BY AN ENGINEER LICENSED IN THE STATE OF CALIFORNIA, SHALL BE REVIEWED BY THE STRUCTURAL ENGINEER OF RECORD PRIOR TO ROOFTOP SHADE STRUCTURE FABRICATION.

# ABBREVIATIONS

| | |
|---|---|
| AB | ANCHOR BOLT |
| ADD'L | ADDITIONAL |
| ADJ | ADJACENT |
| ALT | ALTERNATE |
| ANC | ANCHOR |
| ARCH | ARCHITECTURAL |
| BLDG | BUILDING |
| BLKG | BLOCKING |
| BM | BEAM |
| BOT (B) | BOTTOM |
| BTF | BEAT TO FIT |
| BTWN | BETWEEN |
| CCJ | CONTROL JOINT |
| CGS | CENTER GRAVITY STEEL |
| CIP | CAST-IN-PLACE CONCRETE |
| CJ | CONSTRUCTION JOINT |
| CLR | CLEAR |
| CMU | CONCRETE MASONRY UNITS |
| COL | COLUMN |
| CONC | CONCRETE |
| CONN | CONNECTION |
| CONSTR | CONSTRUCTION |
| CONT | CONTINUOUS |
| CONTR | CONTRACTOR |
| CP | COMPLETE PENETRATION |
| CTR | CENTER |
| CTSK | COUNTERSINK |
| DBA | DEFORMED BAR ANCHOR |
| DIA | DIAMETER |
| DO | DITTO |
| DWL | DOWEL |
| EA | EACH |
| EF | EACH FACE |
| EL | ELEVATION (DATUM) |
| ELEV | ELEVATION (VIEW) OR ELEVATOR |
| EN | EDGE NAILING |
| EQ | EQUAL |
| ES | EACH SIDE |
| EXIST (E) | EXISTING |
| EXP | EXPANSION |
| EXT | EXTERIOR |
| EW | EACH WAY |
| FF | FINISH FLOOR |
| FIN | FINISH |
| FLR | FLOOR |
| FNDN | FOUNDATION |
| FOS | FACE OF STUD |
| FS | FAR SIDE |
| FTG | FOOTING |
| GA | GAGE |
| GALV | GALVANIZED |
| GLB | GLUE-LAM BEAM |
| H&L | HIGH AND LOW |
| HDR | HEADER |
| HORIZ (H) | HORIZONTAL |
| HSB | HIGH STRENGTH BOLTS |
| ID | INSIDE DIAMETER |
| INT | INTERIOR |
| JST | JOIST |
| JT | JOINT |
| K | KIPS |
| L | ANGLE |
| LLH | LONG LEG HORIZ |
| LLV | LONG LEG VERT |
| LONG | LONGITUDINAL |
| LSL | LONG SLOTTED HOLE |
| MAX | MAXIMUM |
| MB | MACHINE BOLTS |
| MECH | MECHANICAL |
| MFR | MANUFACTURER |
| MIN | MINIMUM |
| MISC | MISCELLANEOUS |
| MTL | METAL |
| (N) | NEW |
| NOM | NOMINAL |
| NS | NEAR SIDE |
| NSA | NELSON STUD ANCHOR |
| NTS | NOT TO SCALE |
| OC | ON CENTER |
| OD | OUTSIDE DIAMETER |
| OH | OPPOSITE HAND |
| OPNG | OPENING |
| OVS | OVERSIZE ROUND HOLE |
| PDF | POWDER DRIVEN FASTENER |
| PERP | PERPENDICULAR |
| PL | PLATE |
| PLYWD | PLYWOOD |
| PLCS | PLACES |
| PP | PARTIAL PENETRATION |
| PT | PRESSURE TREATED |
| P/C | PRECAST CONCRETE |
| P/T | POST-TENSIONED |
| REINF | REINFORCEMENT |
| REQ'D | REQUIRED |
| SC | SLIP CRITICAL |
| SHG | SHEATHING |
| SIM | SIMILAR |
| SOG | SLAB-ON-GRADE |
| SSL | SHORT SLOTTED HOLES |
| STD | STANDARD |
| STIFF | STIFFENER |
| STL | STEEL |
| SQ | SQUARE |
| SYM | SYMMETRICAL |
| T&B | TOP & BOTTOM |
| T O (P) | TOP OF (PLYWOOD) |
| TOC | TOP-OF-CONCRETE |
| TOF | TOP-OF-FOOTING |
| TOS | TOP-OF-STEEL |
| TOW | TOP-OF-WALL |
| TYP | TYPICAL |
| UNO | UNLESS NOTED OTHERWISE |
| VERT (V) | VERTICAL |
| WP | WORKPOINT |
| WWF | WELDED WIRE FABRIC |
| W/ | WITH |
| W/O | WITHOUT |

# SHEET INDEX


S1.0 GENERAL NOTES, ABBREVIATIONS, & SHEET INDEX
S2.1 B3 & B2 LEVEL FLOOR PLANS
S2.1a MAT FOUNDATION REINFORCEMENT
S2.2 B1 & P1 LEVEL FLOOR PLANS
S2.3 P2 & P3 LEVEL FLOOR PLANS
S2.4 P4 & P5 LEVEL FLOOR PLANS
S2.5 P6 & P7 LEVEL FLOOR PLANS
S2.6 PARTIAL PLANS
S2.10 PARTIAL PLANS
S2.11 PARTIAL PLANS AT ELEVATORS
S2.12 PARTIAL PLANS AT STAIR
S3.1 COLUMN SCHEDULE & DETAILS
S3.2 SHEARWALL ELEVATIONS
S3.2a SHEARWALL ELEVATION
S3.3 SHEARWALL ELEVATION
S3.4 SHEARWALL ELEVATION
S3.5 RAMP SECTION
S3.6 BUILDING SECTION
S3.7 ELEVATOR ELEVATIONS
S4.1 TYPICAL CONCRETE DETAILS
S4.2 TYPICAL CONCRETE DETAILS
S4.3 TYPICAL SLAB REINFORCING & DETAILS
S4.4 ALTERNATE SLAB REINFORCING & TIES
S4.5 TYPICAL MASONRY DETAILS
S4.6 CONCRETE & MASONRY DETAILS
S4.7 CONCRETE DETAILS
S4.8 CONCRETE & MASONRY DETAILS
S4.10 BEAM ELEVATIONS
S4.11 BEAM ELEVATIONS
S4.12 BEAM ELEVATIONS
S4.13 CONCRETE DETAILS
S4.14 CONCRETE DETAILS
S5.1 STEEL DETAILS


**County of San Diego**
**Cedar & Kettner**
**Development Project**
San Diego, California


McCARTHY
20401 S.W. BIRCH STREET SUITE 300
Newport Beach, California 92660

Architect
IPD
Alameda
Irvine
Los Angeles
Architecture / Engineering / Consulting
www.ipd-global.com
2 Faraday, Suite 101, Irvine CA 92618
Phone 949 595 8004 Fax 949 595 8011

JW JESSEN-WRIGHT
Structural Engineers
100 AMBER GROVE DRIVE, SUITE 109
CHICO, CALIFORNIA 95973
(530) 894-5345 FAX (530) 894-3016

REGISTERED PROFESSIONAL ENGINEER
KENT D. JESSEN
NO. 3393
EXP. 3/31/16
STRUCTURAL
STATE OF CALIFORNIA


| Revision | | Date |
|---|---|---|
| 100% DESIGN DEVELOPMENT | | 10/23/13 |
| 90% CDs - 1ST PLAN CHECK | | 12/24/13 |
| | 2ND PLAN CHECK | 04/23/14 |

| | |
|---|---|
| Date | 9/19/13 |
| JWSE Job No. | 11145 |
| Drawn By | |
| Checked By | |
| Scale | |

CONSTRUCTION DOCUMENTS

Drawing Title
GENERAL NOTES, ABBREVIATIONS, & SHEET INDEX

Drawing No.
**S1.0**


IPD, Inc.

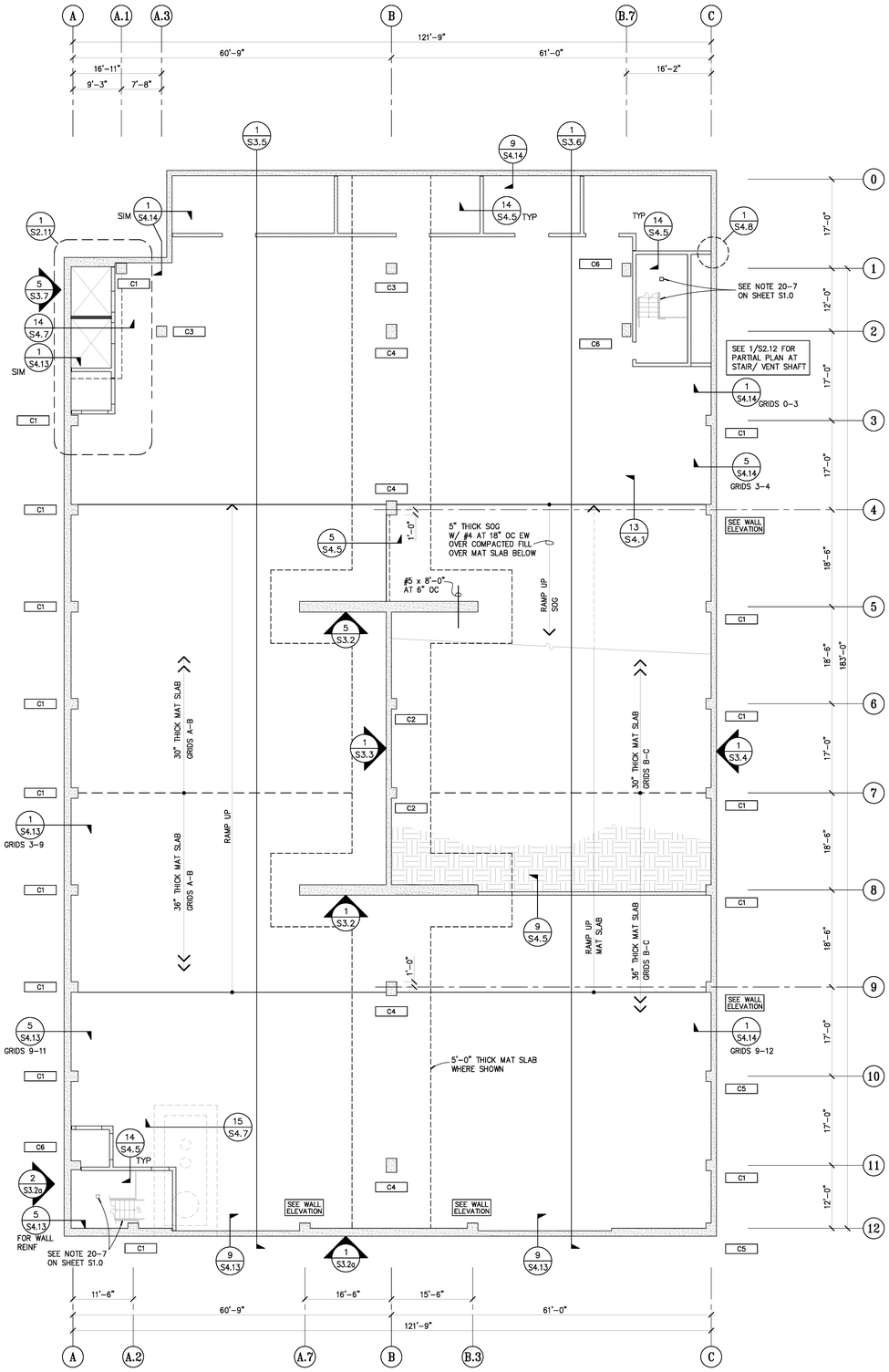


## NOTES

1. SEE SOILS REPORT FOR SUBGRADE PREPARATION.
2. C1 – SEE DETAIL 1/S3.1 FOR COLUMN SCHEDULE.
3. VERIFY ALL DIMENSIONS, TOP OF SLAB, WALL AND CURB ELEVATIONS AND LOCATIONS WITH ARCHITECT.
4. SEE SHEET S3.1, S4.1, S4.2, AND S4.5 FOR TYPICAL DETAILS, UNO.
5. GENERAL CONTRACTOR SHALL PROVIDE CONSTRUCTION JOINT LAYOUT PLAN FOR ENGINEER'S REVIEW PRIOR TO CONCRETE PLACEMENT.
6. SEE 20/S4.1 FOR BASEMENT WALL BLOCK-OUTS TO ALLOW DISENGAGEMENT OF SHORING TIEBACKS.

## B3 LEVEL FLOOR PLAN

NO SCALE

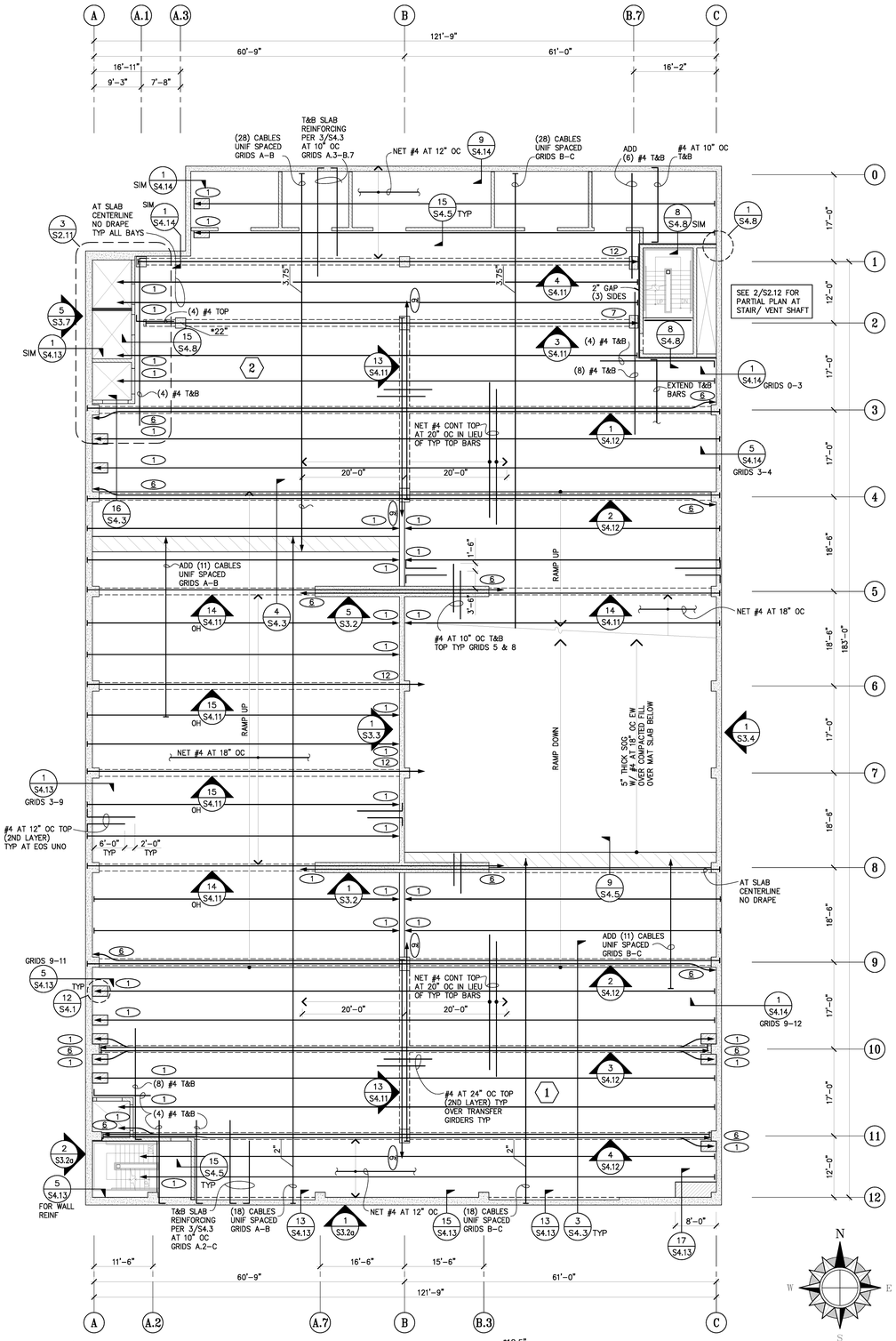


## NOTES

1. SEE SHEET S1.0 FOR TYP P/T NOTES AND SHEETS S4.1, S4.2 & S4.3 FOR TYPICAL CONCRETE AND P/T DETAILS.
2. SLABS SHALL BE 5" THICK UNO.
3. VERIFY ALL TOP OF SLAB, WALL, STEP & CURB ELEVATIONS & LOCATIONS AND OPENING SIZES & LOCATIONS W/ ARCHITECT.
4. HOOK ALL REINFORCING AT SLAB EDGES.
5. (9) – INDICATES NO. OF 1/2" DIA P/T CABLES ($F_{EFF}$ = 26.4K MIN)
6. TYPICAL TENDON ORDINATES ARE AS FOLLOWS, UNO:
   AT SLABS
   A. AT STRESSING & ANCHORAGE ENDS . . . AT MID-DEPTH OF SLAB
   B. OVER SUPPORTS . . . AT 1.25" BELOW TOS
   C. AT MID SPAN . . . . AT 1.25" ABOVE SLAB SOFFIT
   AT 29" BEAMS
   A. AT STRESSING & ANCHORAGE ENDS . . AT 20.5" ABOVE BEAM SOFFIT
   B. OVER SUPPORTS . . . AT 25" ABOVE BEAM SOFFIT
   C. AT MID SPAN . . . . AT 4" ABOVE BEAM SOFFIT
   AT 29" GIRDERS
   A. AT STRESSING & ANCHORAGE ENDS . . AT 19" ABOVE GIRDER SOFFIT
   B. OVER SUPPORTS . . . AT 25" ABOVE BEAM SOFFIT
   C. AT MID SPAN . . . . AT 4" ABOVE GIRDER SOFFIT
   D. SINGLE SPAN GIRDERS SHALL HAVE HARPED PROFILES
7. A. *18.5" INDICATES TENDON ORDINATE AS MEASURED FROM THE SLAB SOFFIT. TENDON ORDINATES SHOWN APPLY TO THE TENDONS PARALLEL TO ORDINATE INDICATOR TAIL.
   B. "*" INDICATES TENDON ORDINATE MEASURED FROM BOTTOM OF BEAM.
   C. "**" INDICATES TENDON ORDINATE VARIES LINEARLY.
8. PROVIDE (1) #4 MIN TOP & BOTTOM ALONG ALL SLAB EDGES, UNO & EXTEND MIN 3'-0" BEYOND INSIDE SLAB EDGE CORNERS, UNO. SPACE ALL TRIM BARS AT 4" OC WHERE MULTIPLE BARS OCCUR. EXTEND TRIM BARS 4'-0" BEYOND CORNERS, TYP.
9. PROVIDE EMBEDDED ITEMS AT STAIRS AND ELEVATORS AS REQUIRED BY MANUFACTURERS.
10. (1) = POUR SEQUENCE NUMBER.

## B2 LEVEL FLOOR PLAN

NO SCALE

**County of San Diego Cedar & Kettner Development Project**
San Diego, California

McCARTHY
2040L S.W. BIRCH STREET SUITE 300
Newport Beach, California 92660

Architect
IPD
Alameda
Irvine
Los Angeles
Architecture / Engineering / Consulting
www.ipd-global.com
2 Faraday, Suite 101, Irvine CA 92618
Phone 949 595 8004 Fax 949 595 8011

JW JESSEN-WRIGHT Structural Engineers
100 AMBER GROVE DRIVE, SUITE 109
CHICO, CALIFORNIA 95973
(530) 894-5345 FAX (530) 894-3016

REGISTERED PROFESSIONAL ENGINEER KEVIN D. JESSEN NO. 2343 EXP. 3/31/15 STRUCTURAL CALIFORNIA

| Revision | Date |
|---|---|
| 100% DESIGN DEVELOPMENT | 10/23/13 |
| 90% CDs - 1ST PLAN CHECK | 12/24/13 |
| 2ND PLAN CHECK | 04/23/14 |

| | |
|---|---|
| Date | 9/19/13 |
| JWSE Job No. | 11145 |
| Drawn By | |
| Checked By | |
| Scale | |

CONSTRUCTION DOCUMENTS

Drawing Title
B3 & B2 LEVEL FLOOR PLANS

Drawing No.
**S2.1**

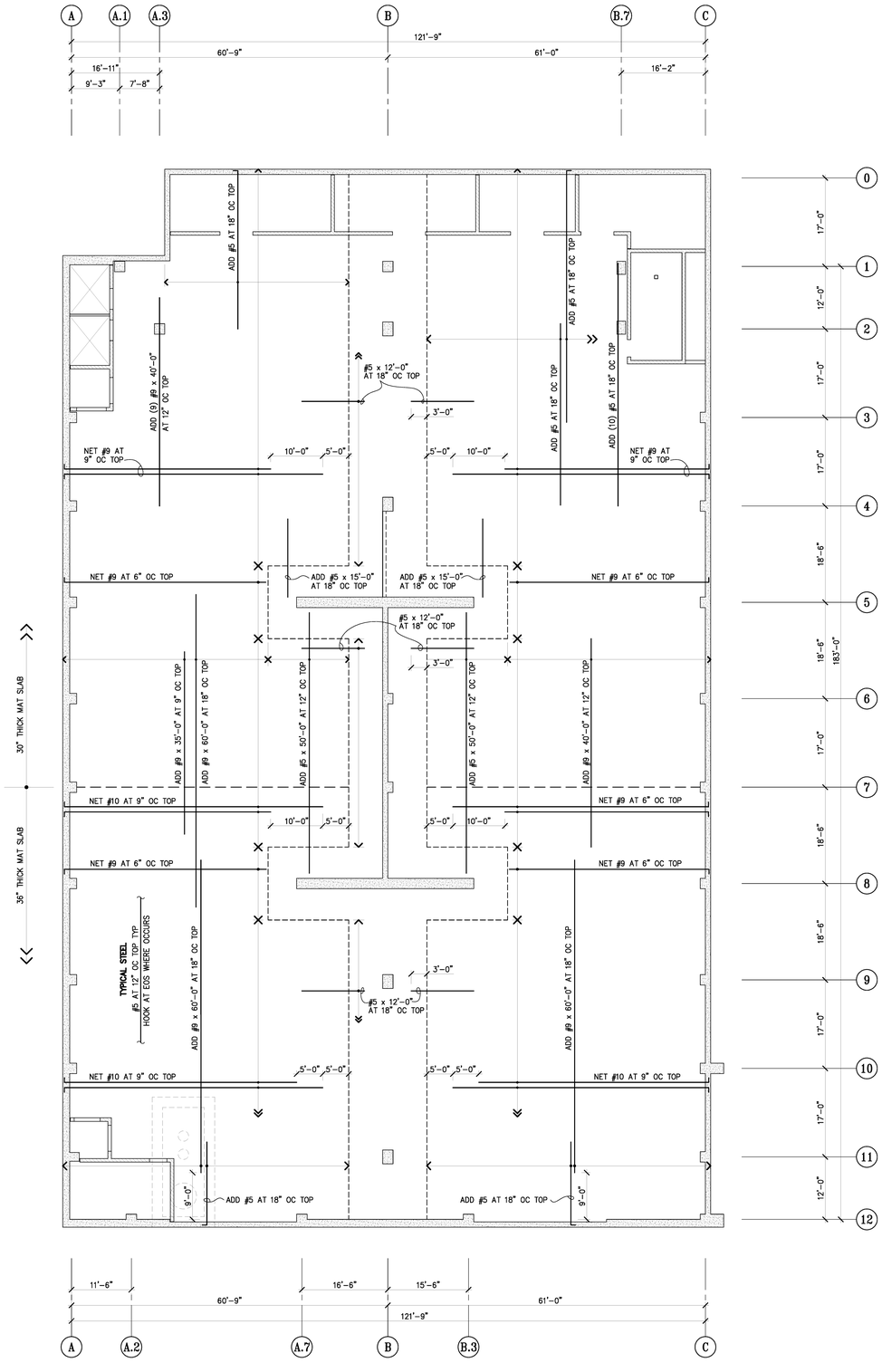


TOP REBAR MAT

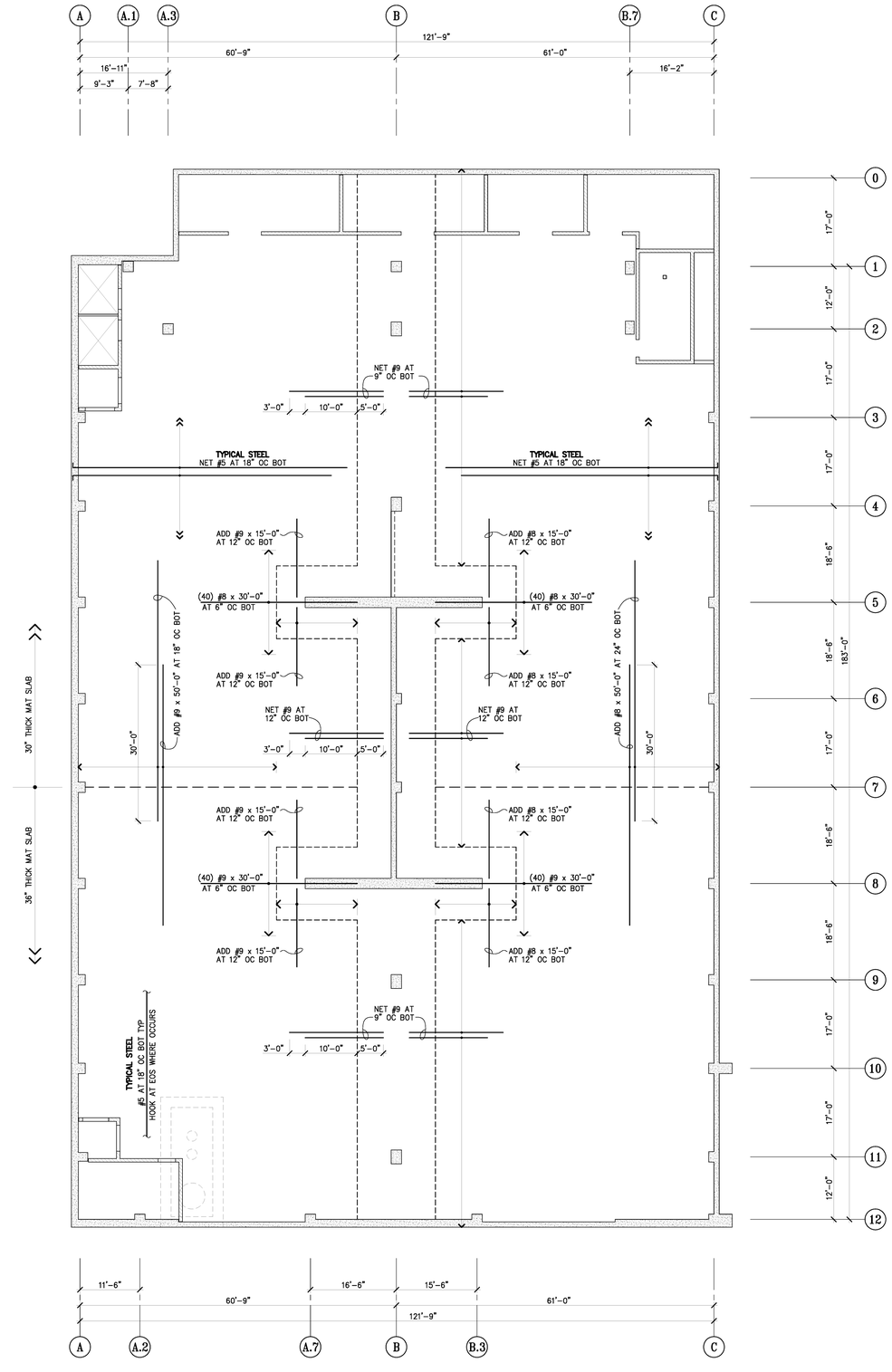


BOTTOM REBAR MAT

## NOTES

1. REBAR LAYERING

BOTTOM MAT: PLACE EAST–WEST BARS AT 3" CLR
PLACE NORTH–SOUTH BARS IN SECOND (TOP) LAYER

TOP MAT: PLACE EAST–WEST BARS AT 1 1/2" CLR
PLACE NORTH–SOUTH BARS IN SECOND (BOT) LAYER

**County of San Diego**
**Cedar & Kettner**
**Development Project**
San Diego, California


McCARTHY
20401 S.W. BIRCH STREET SUITE 300
Newport Beach, California 92660

Architect
IPD
Alameda
Irvine
Los Angeles
Architecture / Engineering / Consulting
www.ipd-global.com
2 Faraday, Suite 101, Irvine CA 92618
Phone 949 595 8004 Fax 949 595 8011

JW JESSEN-WRIGHT
Structural Engineers
100 AMBER GROVE DRIVE, SUITE 109
CHICO, CALIFORNIA 95973
(530) 894-5345 FAX (530) 894-3016


REGISTERED PROFESSIONAL ENGINEER
KENT D. JESSEN
NO. 5393
EXP. 3/31/16
STATE OF CALIFORNIA

| Revision | Date |
|---|---|
| 100% DESIGN DEVELOPMENT | 10/23/13 |
| 90% CDs - 1ST PLAN CHECK | 12/24/13 |
| 2ND PLAN CHECK | 04/23/14 |

| | |
|---|---|
| Date | 9/19/13 |
| JWSE Job No. | 11145 |
| Drawn By | |
| Checked By | |
| Scale | |

CONSTRUCTION DOCUMENTS

Drawing Title

MAT FOUNDATION REINFORCEMENT

Drawing No.

**S2.1a**

IPD, Inc.

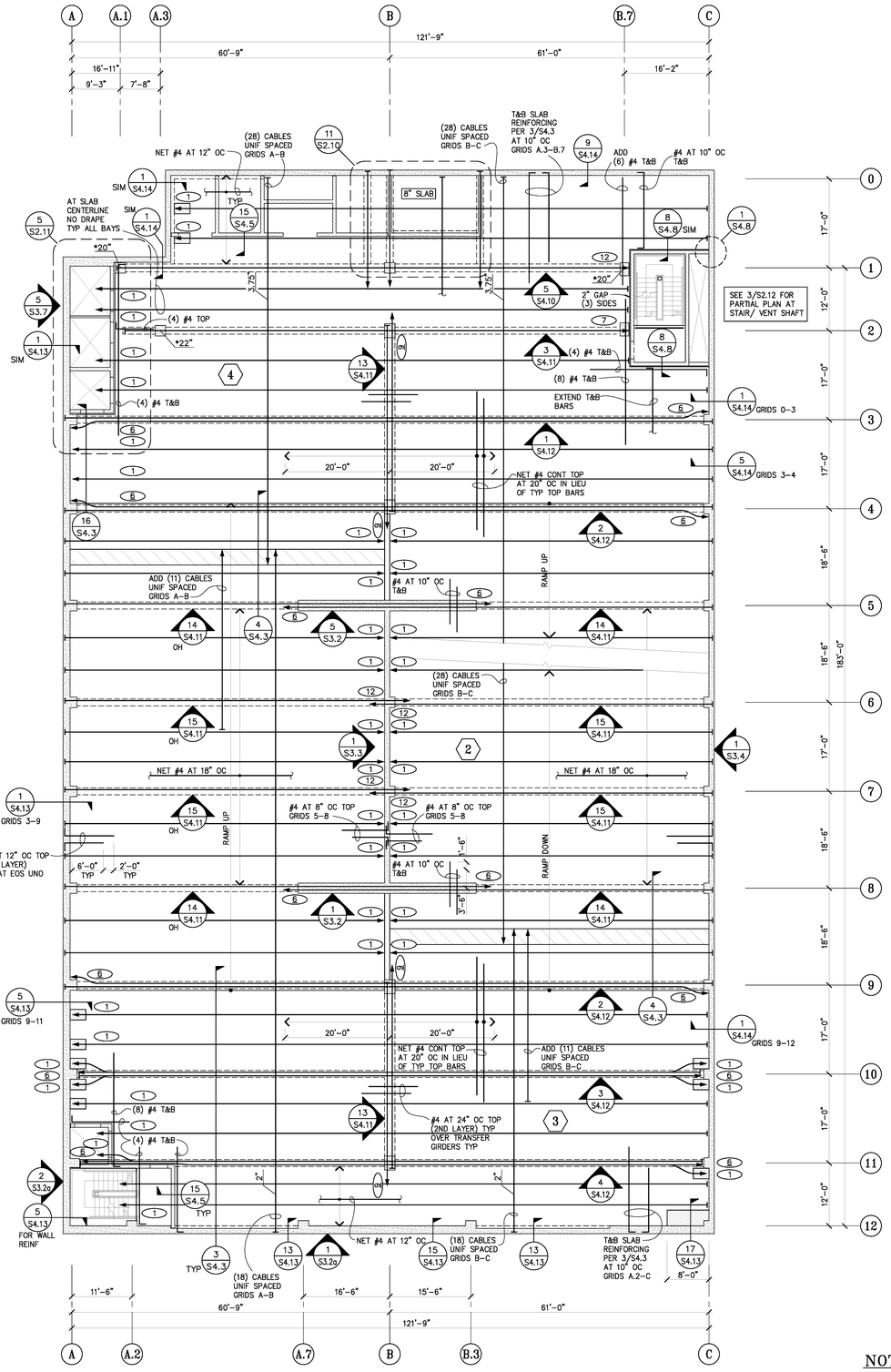


## B1 LEVEL FLOOR PLAN

NO SCALE

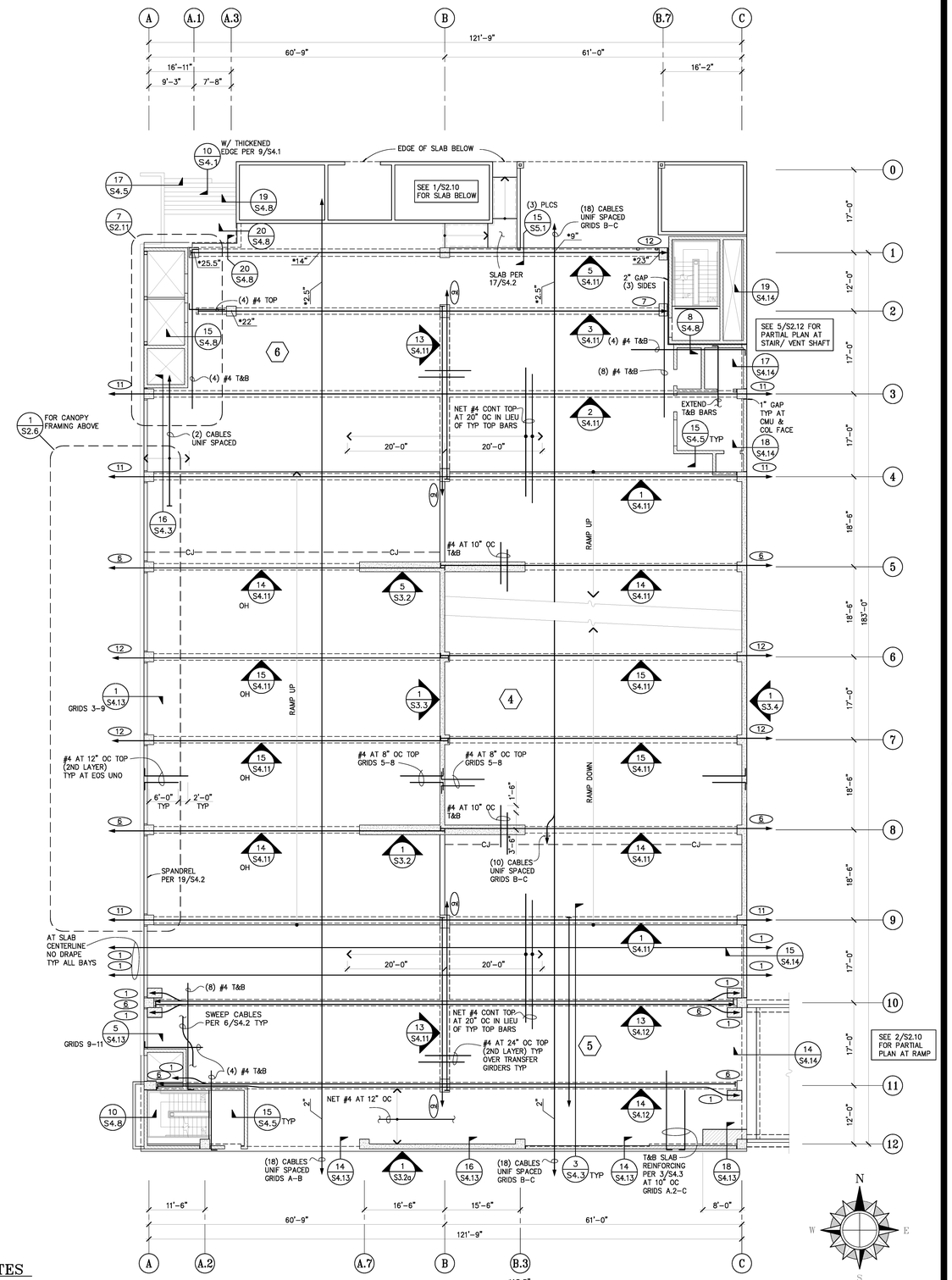


## P1 LEVEL FLOOR PLAN

NO SCALE

## NOTES

1. SEE SHEET S1.0 FOR TYP P/T NOTES AND SHEETS S4.1, S4.2 & S4.3 FOR TYPICAL CONCRETE AND P/T DETAILS.
2. SLABS SHALL BE 5" THICK UNO.
3. VERIFY ALL TOP OF SLAB, WALL, STEP & CURB ELEVATIONS & LOCATIONS AND OPENING SIZES & LOCATIONS W/ ARCHITECT.
4. HOOK ALL REINFORCING AT SLAB EDGES.
5. (9) – INDICATES NO. OF 1/2" DIA P/T CABLES ($F_{EFF}$ = 26.4K MIN)
6. TYPICAL TENDON ORDINATES ARE AS FOLLOWS, UNO:
   AT SLABS
   A. AT STRESSING & ANCHORAGE ENDS . . AT MID-DEPTH OF SLAB
   B. OVER SUPPORTS . . . . AT 1.25" BELOW TOS
   C. AT MID SPAN . . . . AT 1.25" ABOVE SLAB SOFFIT
   AT 29" BEAMS
   A. AT STRESSING & ANCHORAGE ENDS . . AT 20.5" ABOVE BEAM SOFFIT
   B. OVER SUPPORTS . . . AT 25" ABOVE BEAM SOFFIT
   C. AT MID SPAN . . . . AT 4" ABOVE BEAM SOFFIT
   AT 29" GIRDERS
   A. AT STRESSING & ANCHORAGE ENDS . . AT 19" ABOVE GIRDER SOFFIT
   B. OVER SUPPORTS . . . AT 25" ABOVE BEAM SOFFIT
   C. AT MID SPAN . . . . AT 4" ABOVE GIRDER SOFFIT
   D. SINGLE SPAN GIRDERS SHALL HAVE HARPED PROFILES
7. A. *18.5" INDICATES TENDON ORDINATE AS MEASURED FROM THE SLAB SOFFIT. TENDON ORDINATES SHOWN APPLY TO THE TENDONS PARALLEL TO ORDINATE INDICATOR TAIL.
   B. "*" INDICATES TENDON ORDINATE MEASURED FROM BOTTOM OF BEAM.
   C. "**" INDICATES TENDON ORDINATE VARIES LINEARLY.
8. PROVIDE (1) #4 MIN TOP & BOTTOM ALONG ALL SLAB EDGES, UNO & EXTEND MIN 3'-0" BEYOND INSIDE SLAB EDGE CORNERS, UNO. SPACE ALL TRIM BARS AT 4" OC WHERE MULTIPLE BARS OCCUR. EXTEND TRIM BARS 4'-0" BEYOND CORNERS, TYP.
9. PROVIDE EMBEDDED ITEMS AT STAIRS AND ELEVATORS AS REQUIRED BY MANUFACTURERS.
10. (1) = POUR SEQUENCE NUMBER.

**County of San Diego**
**Cedar & Kettner**
**Development Project**
San Diego, California

McCARTHY
2040L S.W. BIRCH STREET SUITE 300
Newport Beach, California 92660

Architect
IPD
Alameda
Irvine
Los Angeles
Architecture / Engineering / Consulting
www.ipd-global.com
2 Faraday, Suite 101, Irvine CA 92618
Phone 949 595 8004 Fax 949 595 8011

JW JESSEN-WRIGHT Structural Engineers
100 AMBER GROVE DRIVE, SUITE 109
CHICO, CALIFORNIA 95973
(530) 894-5345 FAX (530) 894-3016

REGISTERED PROFESSIONAL ENGINEER KEVIN D. JESSEN C 048398 EXP. 3/31/15 STRUCTURAL STATE OF CALIFORNIA

| Revision | Date |
|---|---|
| 100% DESIGN DEVELOPMENT | 10/23/13 |
| 90% CDs - 1ST PLAN CHECK | 12/24/13 |
| 2ND PLAN CHECK | 04/23/14 |

| | |
|---|---|
| Date | 9/19/13 |
| JWSE Job No. | 11145 |
| Drawn By | |
| Checked By | |
| Scale | |

CONSTRUCTION DOCUMENTS

Drawing Title
B1 & P1 LEVEL FLOOR PLANS

Drawing No.
**S2.2**

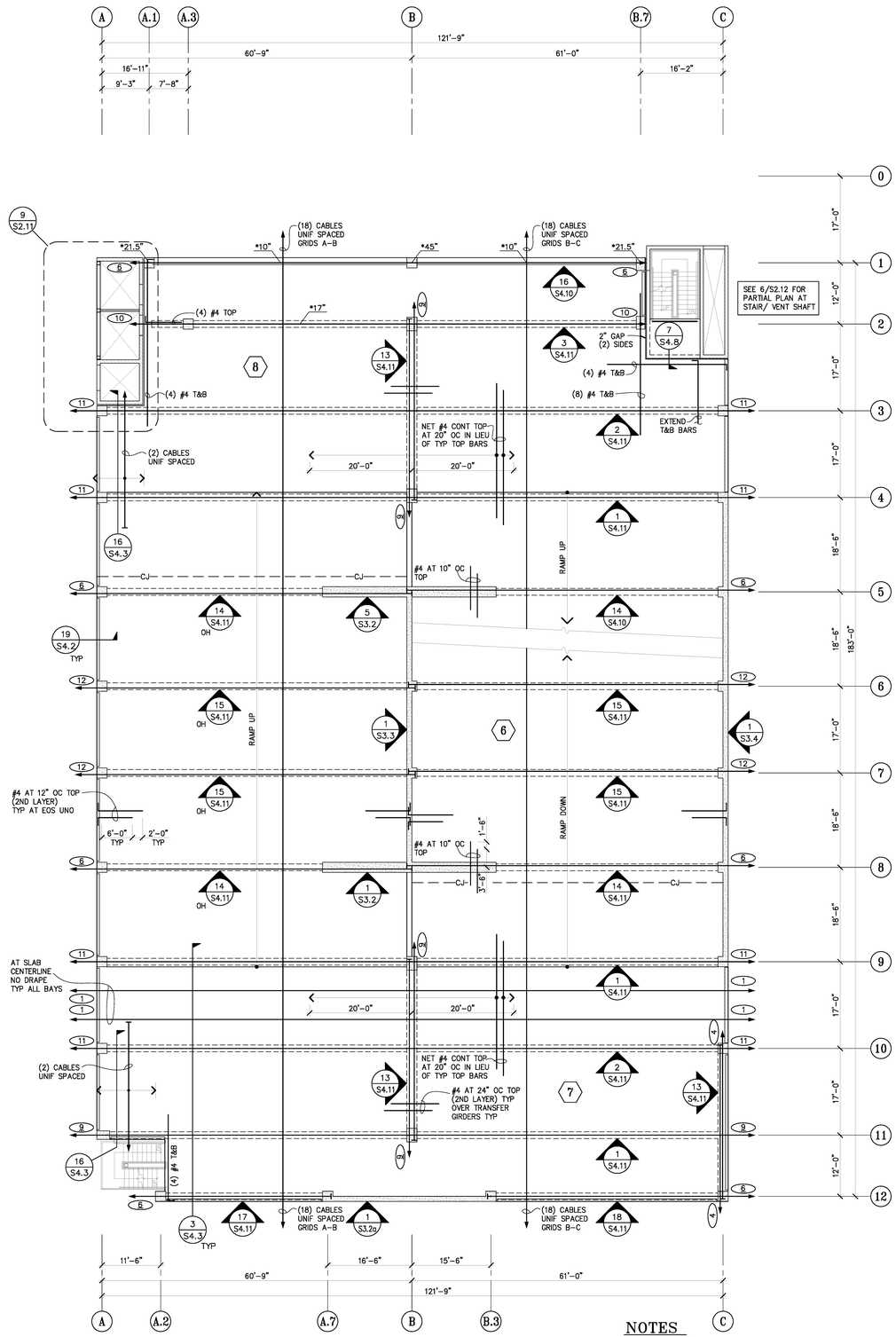


## P2 LEVEL FLOOR PLAN

NO SCALE

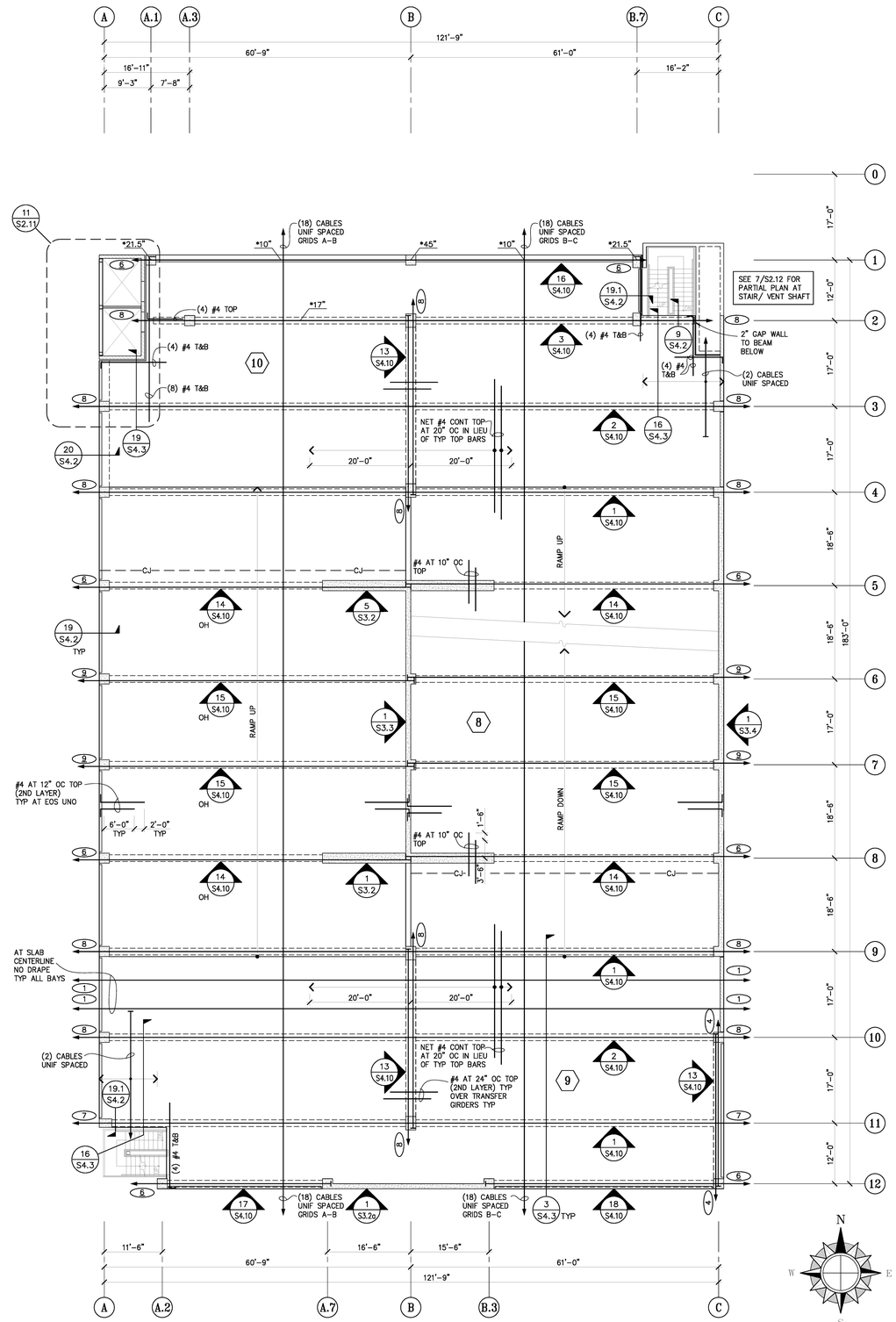


## P3 LEVEL FLOOR PLAN

NO SCALE

## NOTES

1. SEE SHEET S1.0 FOR TYP P/T NOTES AND SHEETS S4.1, S4.2 & S4.3 FOR TYPICAL CONCRETE AND P/T DETAILS.
2. SLABS SHALL BE 5" THICK UNO.
3. VERIFY ALL TOP OF SLAB, WALL, STEP & CURB ELEVATIONS & LOCATIONS AND OPENING SIZES & LOCATIONS W/ ARCHITECT.
4. HOOK ALL REINFORCING AT SLAB EDGES.
5. (9) – INDICATES NO. OF 1/2" DIA P/T CABLES ($F_{EFF}$ = 26.4K MIN)
6. TYPICAL TENDON ORDINATES ARE AS FOLLOWS, UNO:
   AT SLABS
   A. AT STRESSING & ANCHORAGE ENDS . . AT MID-DEPTH OF SLAB
   B. OVER SUPPORTS . . . . AT 1.25" BELOW TOS
   C. AT MID SPAN . . . . . AT 1.25" ABOVE SLAB SOFFIT
   AT 29" BEAMS
   A. AT STRESSING & ANCHORAGE ENDS . . AT 20.5" ABOVE BEAM SOFFIT
   B. OVER SUPPORTS . . . . AT 25" ABOVE BEAM SOFFIT
   C. AT MID SPAN . . . . . AT 4" ABOVE BEAM SOFFIT
   AT 29" GIRDERS
   A. AT STRESSING & ANCHORAGE ENDS . . AT 19" ABOVE GIRDER SOFFIT
   B. OVER SUPPORTS . . . . AT 25" ABOVE BEAM SOFFIT
   C. AT MID SPAN . . . . . AT 4" ABOVE GIRDER SOFFIT
   D. SINGLE SPAN GIRDERS SHALL HAVE HARPED PROFILES
   AT 35" BEAMS
   A. AT STRESSING & ANCHORAGE ENDS . . AT 24.25" ABOVE BEAM SOFFIT
   B. OVER SUPPORTS . . . . AT 31" ABOVE BEAM SOFFIT
   C. AT MID SPAN . . . . . AT 4" ABOVE BEAM SOFFIT
   AT 35" GIRDERS
   A. AT STRESSING & ANCHORAGE ENDS . . AT 22" ABOVE GIRDER SOFFIT
   B. OVER SUPPORTS . . . . AT 31" ABOVE BEAM SOFFIT
   C. AT MID SPAN . . . . . AT 4" ABOVE GIRDER SOFFIT
   D. SINGLE SPAN GIRDERS SHALL HAVE HARPED PROFILES
7. A. *18.5" INDICATES TENDON ORDINATE AS MEASURED FROM THE SLAB SOFFIT. TENDON ORDINATES SHOWN APPLY TO THE TENDONS PARALLEL TO ORDINATE INDICATOR TAIL.
   B. "*" INDICATES TENDON ORDINATE MEASURED FROM BOTTOM OF BEAM.
   C. "**" INDICATES TENDON ORDINATE VARIES LINEARLY.
8. PROVIDE (1) #4 MIN TOP & BOTTOM ALONG ALL SLAB EDGES, UNO & EXTEND MIN 3'-0" BEYOND INSIDE SLAB EDGE CORNERS, UNO. SPACE ALL TRIM BARS AT 4" OC WHERE MULTIPLE BARS OCCUR. EXTEND TRIM BARS 4'-0" BEYOND CORNERS, TYP.
9. PROVIDE EMBEDDED ITEMS AT STAIRS AND ELEVATORS AS REQUIRED BY MANUFACTURERS.
10. (1) = POUR SEQUENCE NUMBER.

**County of San Diego Cedar & Kettner Development Project**
San Diego, California

McCARTHY
2040L S.W. BIRCH STREET SUITE 300
Newport Beach, California 92660

Architect
IPD
Alameda
Irvine
Los Angeles
Architecture / Engineering / Consulting
www.ipd-global.com
2 Faraday, Suite 101, Irvine CA 92618
Phone 949 595 8004 Fax 949 595 8011

JW JESSEN-WRIGHT Structural Engineers
100 AMBER GROVE DRIVE, SUITE 109
CHICO, CALIFORNIA 95973
(530) 894-5345 FAX (530) 894-3016

REGISTERED PROFESSIONAL ENGINEER KENT D. JESSEN NO. 2393 EXP. 3-31-15 STRUCTURAL CALIFORNIA

| Revision | Date |
|---|---|
| 100% DESIGN DEVELOPMENT | 10/23/13 |
| 90% CDs - 1ST PLAN CHECK | 12/24/13 |
| 2ND PLAN CHECK | 04/23/14 |

| | |
|---|---|
| Date | 9/19/13 |
| JWSE Job No. | 11145 |
| Drawn By | |
| Checked By | |
| Scale | |

CONSTRUCTION DOCUMENTS

Drawing Title
P2 & P3 LEVEL FLOOR PLANS

Drawing No.
**S2.3**

IPD, Inc.

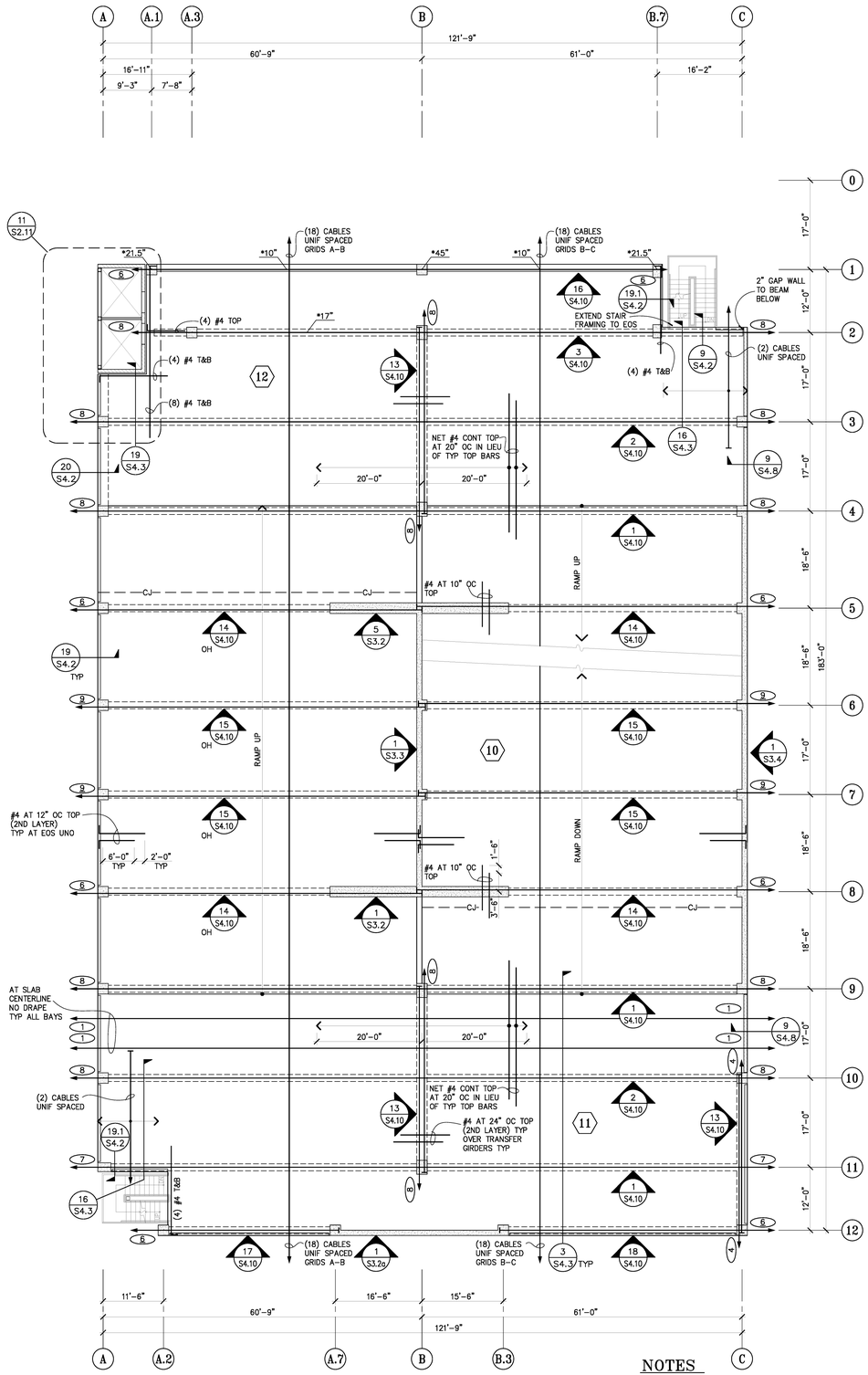


## P4 LEVEL FLOOR PLAN

NO SCALE

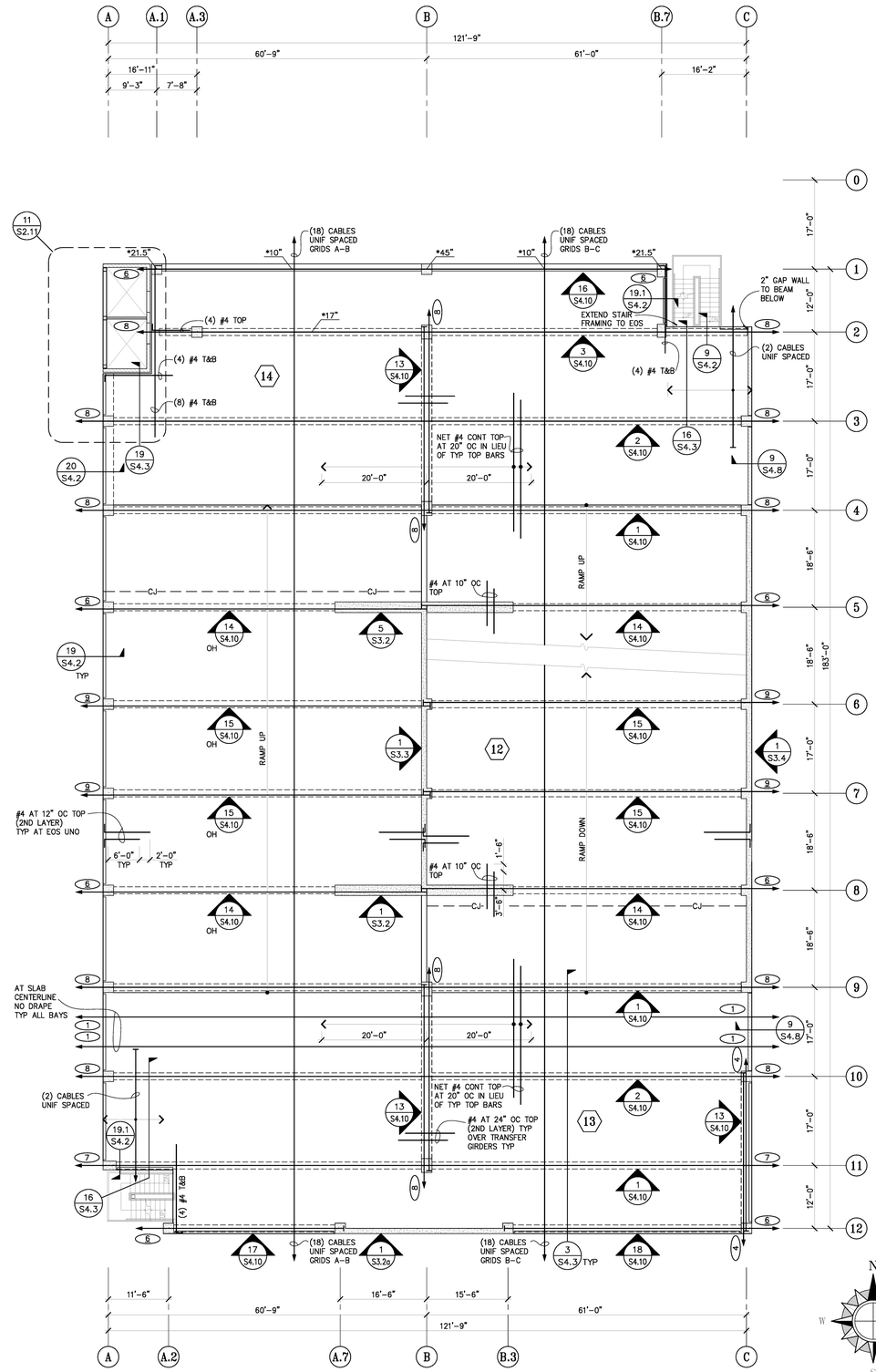


## P5 LEVEL FLOOR PLAN

NO SCALE

## NOTES

1. SEE SHEET S1.0 FOR TYP P/T NOTES AND SHEETS S4.1, S4.2 & S4.3 FOR TYPICAL CONCRETE AND P/T DETAILS.
2. SLABS SHALL BE 5" THICK UNO.
3. VERIFY ALL TOP OF SLAB, WALL, STEP & CURB ELEVATIONS & LOCATIONS AND OPENING SIZES & LOCATIONS W/ ARCHITECT.
4. HOOK ALL REINFORCING AT SLAB EDGES.
5. (9) – INDICATES NO. OF 1/2" DIA P/T CABLES ($F_{EFF}$ = 26.4K MIN)
6. TYPICAL TENDON ORDINATES ARE AS FOLLOWS, UNO:
   AT SLABS
   A. AT STRESSING & ANCHORAGE ENDS . . AT MID-DEPTH OF SLAB
   B. OVER SUPPORTS . . . . AT 1.25" BELOW TOS
   C. AT MID SPAN . . . . . AT 1.25" ABOVE SLAB SOFFIT
   AT 29" BEAMS
   A. AT STRESSING & ANCHORAGE ENDS . . AT 20.5" ABOVE BEAM SOFFIT
   B. OVER SUPPORTS . . . . AT 25" ABOVE BEAM SOFFIT
   C. AT MID SPAN . . . . . AT 4" ABOVE BEAM SOFFIT
   AT 29" GIRDERS
   A. AT STRESSING & ANCHORAGE ENDS . . AT 19" ABOVE GIRDER SOFFIT
   B. OVER SUPPORTS . . . . AT 25" ABOVE BEAM SOFFIT
   C. AT MID SPAN . . . . . AT 4" ABOVE GIRDER SOFFIT
   D. SINGLE SPAN GIRDERS SHALL HAVE HARPED PROFILES
   AT 35" BEAMS
   A. AT STRESSING & ANCHORAGE ENDS . . AT 24.25" ABOVE BEAM SOFFIT
   B. OVER SUPPORTS . . . . AT 31" ABOVE BEAM SOFFIT
   C. AT MID SPAN . . . . . AT 4" ABOVE BEAM SOFFIT
   AT 35" GIRDERS
   A. AT STRESSING & ANCHORAGE ENDS . . AT 22" ABOVE GIRDER SOFFIT
   B. OVER SUPPORTS . . . . AT 31" ABOVE BEAM SOFFIT
   C. AT MID SPAN . . . . . AT 4" ABOVE GIRDER SOFFIT
   D. SINGLE SPAN GIRDERS SHALL HAVE HARPED PROFILES
7. A. *18.5" INDICATES TENDON ORDINATE AS MEASURED FROM THE SLAB SOFFIT. TENDON ORDINATES SHOWN APPLY TO THE TENDONS PARALLEL TO ORDINATE INDICATOR TAIL.
   B. "*" INDICATES TENDON ORDINATE MEASURED FROM BOTTOM OF BEAM.
   C. "**" INDICATES TENDON ORDINATE VARIES LINEARLY.
8. PROVIDE (1) #4 MIN TOP & BOTTOM ALONG ALL SLAB EDGES, UNO & EXTEND MIN 3'-0" BEYOND INSIDE SLAB EDGE CORNERS, UNO. SPACE ALL TRIM BARS AT 4" OC WHERE MULTIPLE BARS OCCUR. EXTEND TRIM BARS 4'-0" BEYOND CORNERS, TYP.
9. PROVIDE EMBEDDED ITEMS AT STAIRS AND ELEVATORS AS REQUIRED BY MANUFACTURERS.
10. (1) = POUR SEQUENCE NUMBER.

County of San Diego
Cedar & Kettner
Development Project
San Diego, California

McCARTHY
2040L S.W. BIRCH STREET SUITE 300
Newport Beach, California 92660

Architect
IPD
Alameda
Irvine
Los Angeles
Architecture / Engineering / Consulting
www.ipd-global.com
2 Faraday, Suite 101, Irvine CA 92618
Phone 949 595 8004 Fax 949 595 8011

JW JESSEN-WRIGHT
Structural Engineers
100 AMBER GROVE DRIVE, SUITE 109
CHICO, CALIFORNIA 95973
(530) 894-5345 FAX (530) 894-3016

REGISTERED PROFESSIONAL ENGINEER KENT D. JESSEN NO. 2398 EXP. 3-31-15 STRUCTURAL CALIFORNIA

| Revision | Date |
|---|---|
| 100% DESIGN DEVELOPMENT | 10/23/13 |
| 90% CDs - 1ST PLAN CHECK | 12/24/13 |
| 2ND PLAN CHECK | 04/23/14 |

| | |
|---|---|
| Date | 9/19/13 |
| JWSE Job No. | 11145 |
| Drawn By | |
| Checked By | |
| Scale | |

CONSTRUCTION DOCUMENTS

Drawing Title
P4 & P5 LEVEL FLOOR PLANS

Drawing No.
S2.4

IPD, Inc.

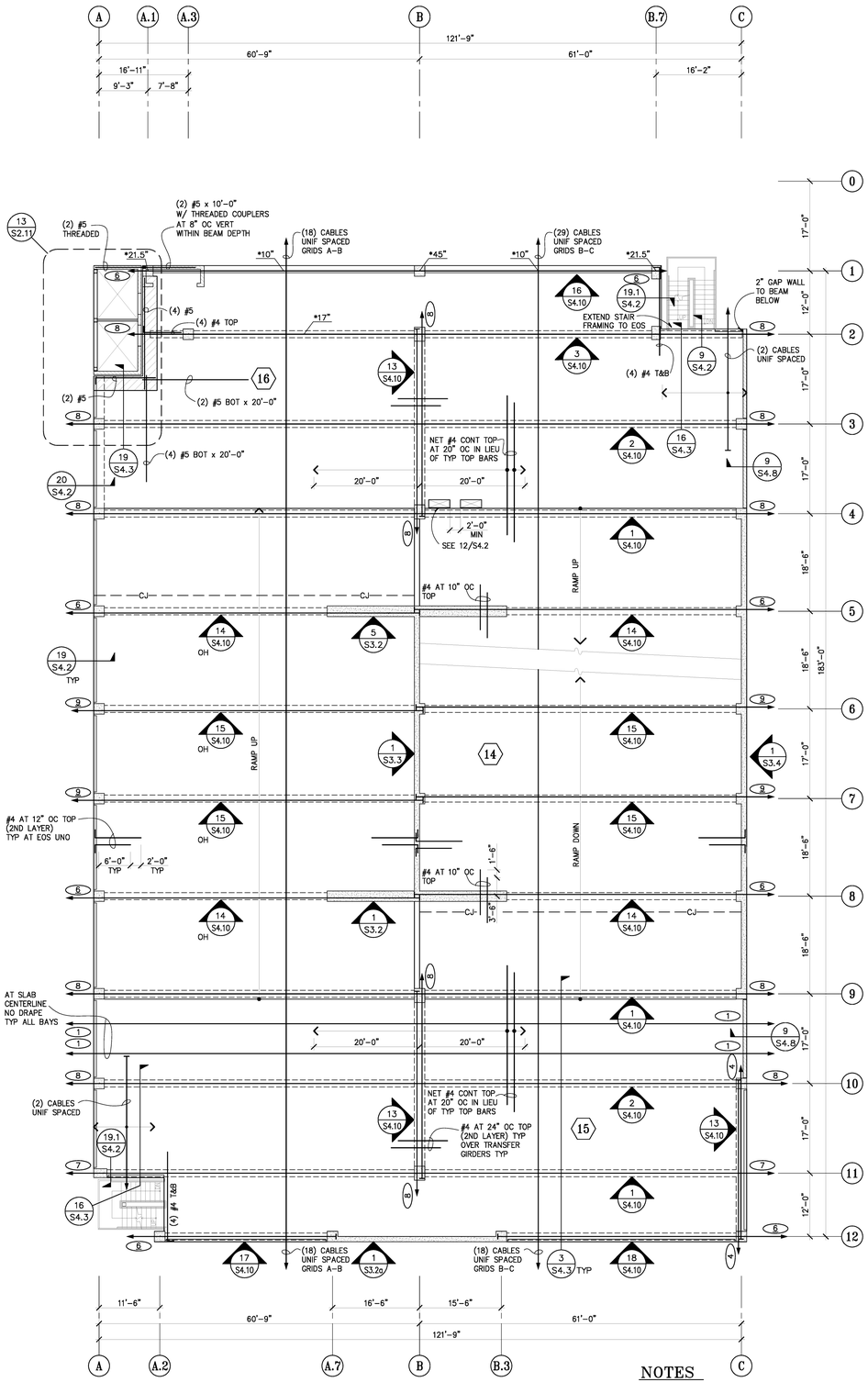


## P6 LEVEL FLOOR PLAN

NO SCALE

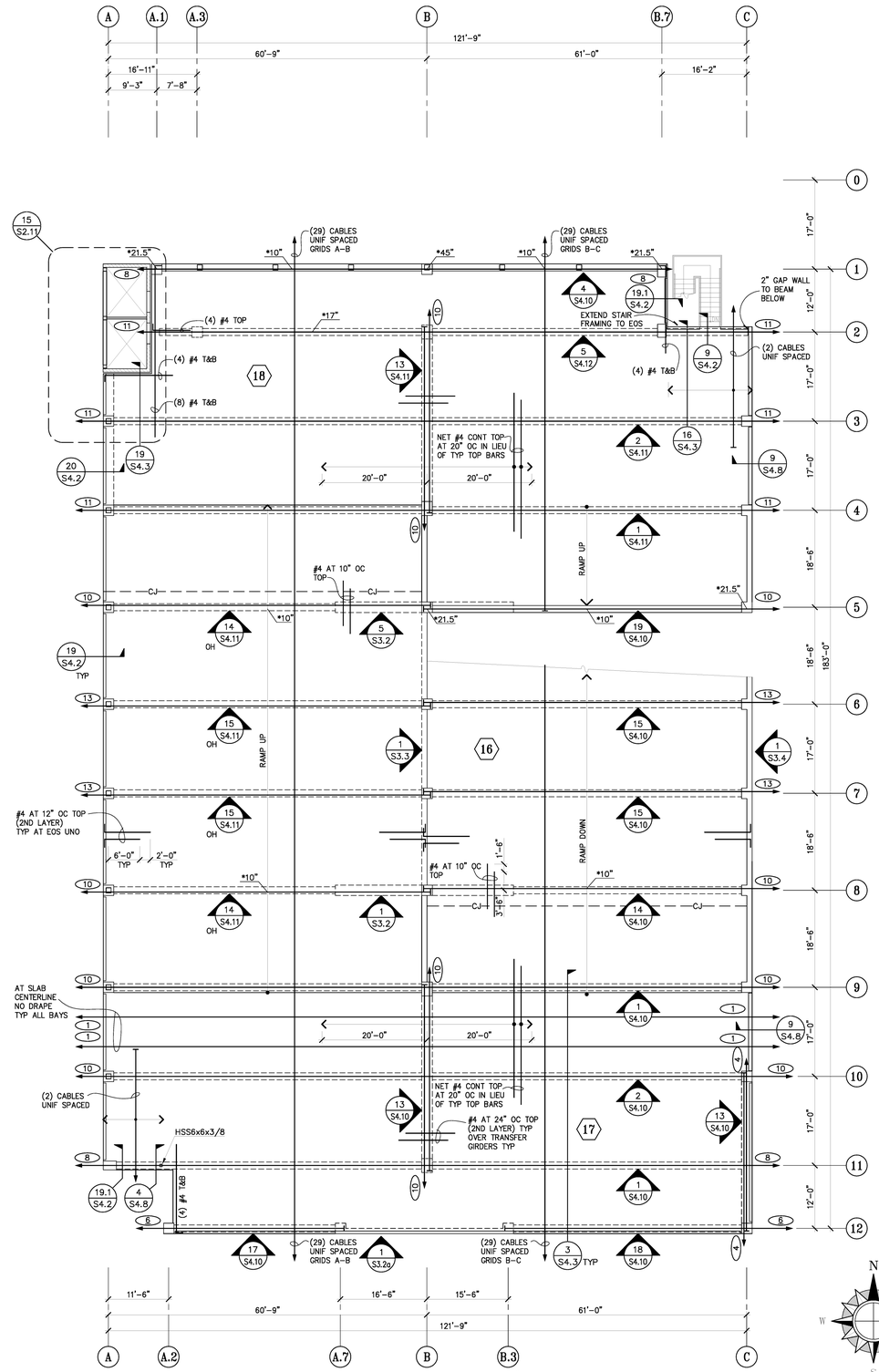


## NOTES

1. SEE SHEET S1.0 FOR TYP P/T NOTES AND SHEETS S4.1, S4.2 & S4.3 FOR TYPICAL CONCRETE AND P/T DETAILS.
2. SLABS SHALL BE 5" THICK UNO.
3. VERIFY ALL TOP OF SLAB, WALL, STEP & CURB ELEVATIONS & LOCATIONS AND OPENING SIZES & LOCATIONS W/ ARCHITECT.
4. HOOK ALL REINFORCING AT SLAB EDGES.
5. (9) – INDICATES NO. OF 1/2" DIA P/T CABLES ($F_{EFF}$ = 26.4K MIN)
6. TYPICAL TENDON ORDINATES ARE AS FOLLOWS, UNO:
   AT SLABS
   A. AT STRESSING & ANCHORAGE ENDS . . AT MID-DEPTH OF SLAB
   B. OVER SUPPORTS . . . AT 1.25" BELOW TOS
   C. AT MID SPAN . . . . AT 1.25" ABOVE SLAB SOFFIT
   AT 29" BEAMS
   A. AT STRESSING & ANCHORAGE ENDS . . AT 20.5" ABOVE BEAM SOFFIT
   B. OVER SUPPORTS . . . AT 25" ABOVE BEAM SOFFIT
   C. AT MID SPAN . . . . AT 4" ABOVE BEAM SOFFIT
   AT 29" GIRDERS
   A. AT STRESSING & ANCHORAGE ENDS . . AT 19" ABOVE GIRDER SOFFIT
   B. OVER SUPPORTS . . . AT 25" ABOVE BEAM SOFFIT
   C. AT MID SPAN . . . . AT 4" ABOVE GIRDER SOFFIT
   D. SINGLE SPAN GIRDERS SHALL HAVE HARPED PROFILES
   AT 35" BEAMS
   A. AT STRESSING & ANCHORAGE ENDS . . AT 24.25" ABOVE BEAM SOFFIT
   B. OVER SUPPORTS . . . AT 31" ABOVE BEAM SOFFIT
   C. AT MID SPAN . . . . AT 4" ABOVE BEAM SOFFIT
   AT 35" GIRDERS
   A. AT STRESSING & ANCHORAGE ENDS . . AT 22" ABOVE GIRDER SOFFIT
   B. OVER SUPPORTS . . . AT 31" ABOVE BEAM SOFFIT
   C. AT MID SPAN . . . . AT 4" ABOVE GIRDER SOFFIT
   D. SINGLE SPAN GIRDERS SHALL HAVE HARPED PROFILES
7. A. *18.5" INDICATES TENDON ORDINATE AS MEASURED FROM THE SLAB SOFFIT. TENDON ORDINATES SHOWN APPLY TO THE TENDONS PARALLEL TO ORDINATE INDICATOR TAIL.
   B. "*" INDICATES TENDON ORDINATE MEASURED FROM BOTTOM OF BEAM.
   C. "**" INDICATES TENDON ORDINATE VARIES LINEARLY.
8. PROVIDE (1) #4 MIN TOP & BOTTOM ALONG ALL SLAB EDGES, UNO & EXTEND MIN 3'-0" BEYOND INSIDE SLAB EDGE CORNERS, UNO. SPACE ALL TRIM BARS AT 4" OC WHERE MULTIPLE BARS OCCUR. EXTEND TRIM BARS 4'-0" BEYOND CORNERS, TYP.
9. PROVIDE EMBEDDED ITEMS AT STAIRS AND ELEVATORS AS REQUIRED BY MANUFACTURERS.
10. (1) = POUR SEQUENCE NUMBER.
11. SEE 5/S2.6 FOR ROOF TRELLIS FRAMING.

## P7 LEVEL FLOOR PLAN

NO SCALE

County of San Diego
Cedar & Kettner
Development Project
San Diego, California

McCARTHY
2040L S.W. BIRCH STREET SUITE 300
Newport Beach, California 92660

Architect
IPD
Alameda
Irvine
Los Angeles
Architecture / Engineering / Consulting
www.ipd-global.com
2 Faraday, Suite 101, Irvine CA 92618
Phone 949 595 8004 Fax 949 595 8011

JW JESSEN-WRIGHT Structural Engineers
100 AMBER GROVE DRIVE, SUITE 109
CHICO, CALIFORNIA 95973
(530) 894-5345 FAX (530) 894-3016

REGISTERED PROFESSIONAL ENGINEER KENT D. JESSEN NO. 2398 EXP. 3-31-15 STRUCTURAL CALIFORNIA

| Revision | Date |
|---|---|
| 100% DESIGN DEVELOPMENT | 10/23/13 |
| 90% CDs - 1ST PLAN CHECK | 12/24/13 |
| 2ND PLAN CHECK | 04/23/14 |

| | |
|---|---|
| Date | 9/19/13 |
| JWSE Job No. | 11145 |
| Drawn By | |
| Checked By | |
| Scale | |

CONSTRUCTION DOCUMENTS

Drawing Title
P6 & P7 LEVEL FLOOR PLANS

Drawing No.
S2.5

IPD, Inc.

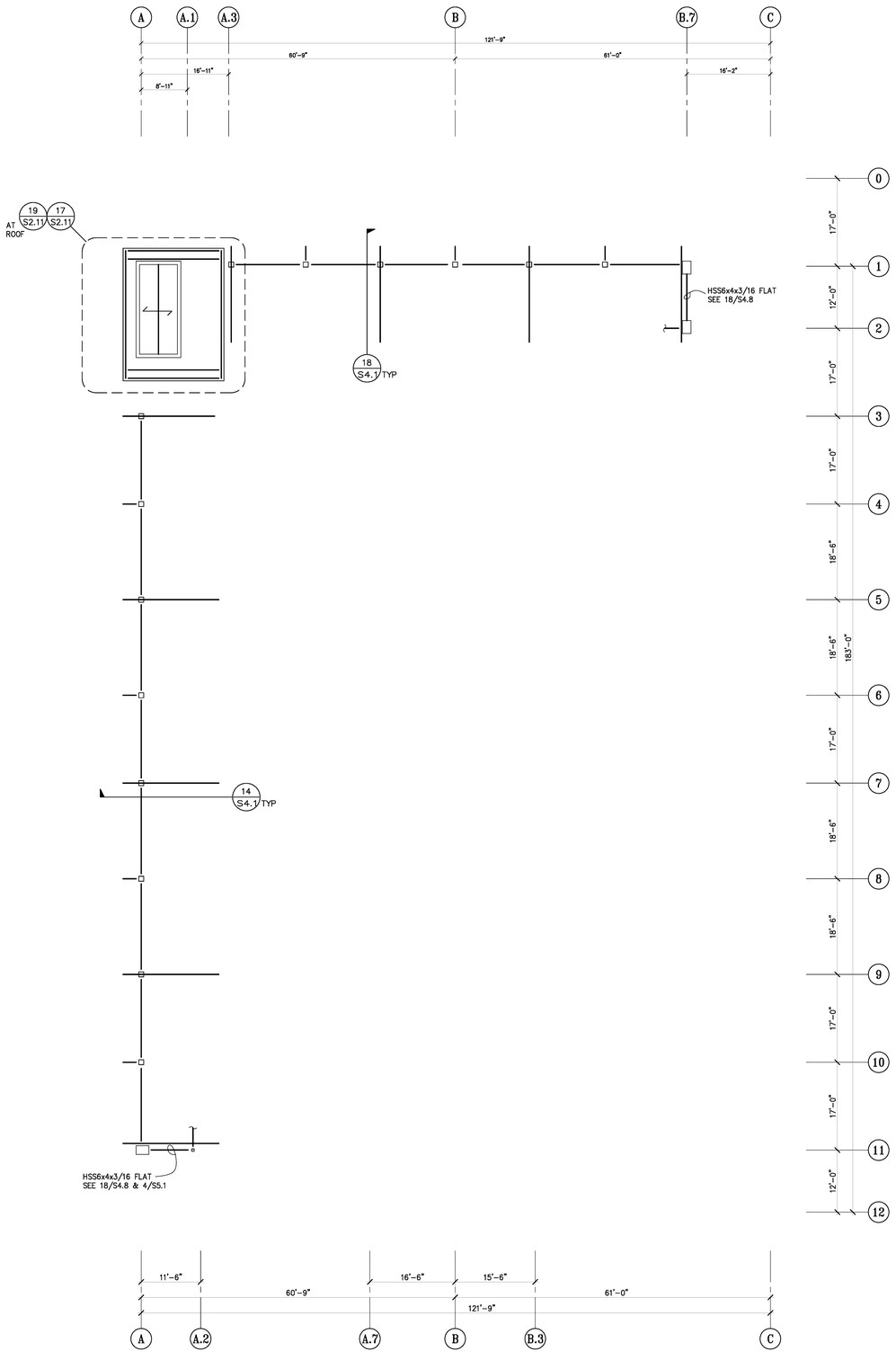


ROOF TRELLIS FRAMING

NO SCALE

5
S2.6

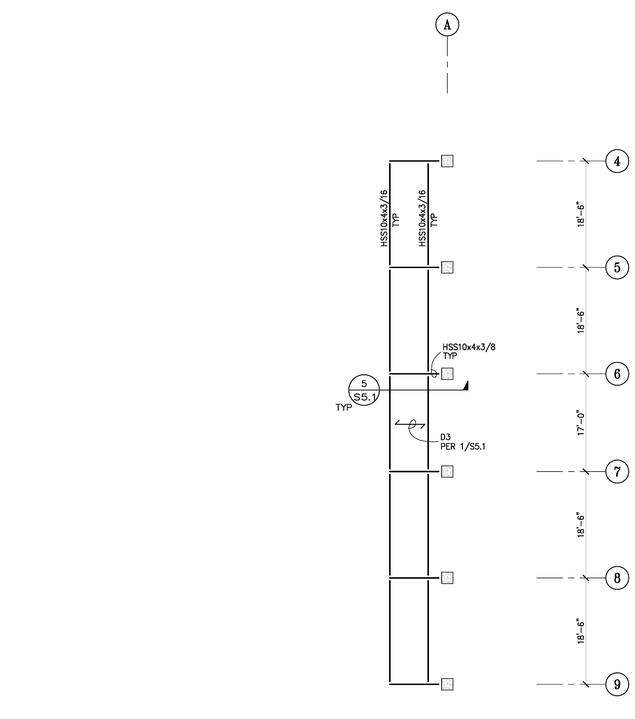


PARTIAL PLAN AT CANOPY

NO SCALE

1
S2.6

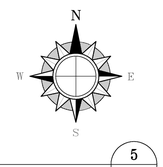


**County of San Diego**
**Cedar & Kettner**
**Development Project**
San Diego, California

McCARTHY

2040L S.W. BIRCH STREET SUITE 300
Newport Beach, California 92660

Architect

IPD

Alameda
Irvine
Los Angeles

Architecture / Engineering / Consulting
www.ipd-global.com

2 Faraday, Suite 101, Irvine CA 92618
Phone 949 595 8004 Fax 949 595 8011

JW JESSEN-WRIGHT
Structural Engineers

100 AMBER GROVE DRIVE, SUITE 109
CHICO, CALIFORNIA 95973
(530) 894-5345 FAX (530) 894-3016

REGISTERED PROFESSIONAL ENGINEER
KENT D. JESSEN
NO. 5338
EXP. 12/31/14
STRUCTURAL
STATE OF CALIFORNIA

| Revision | Date |
|---|---|
| 100% DESIGN DEVELOPMENT | 10/23/13 |
| 90% CDs - 1ST PLAN CHECK | 12/24/13 |
| 2ND PLAN CHECK | 04/23/14 |

| | |
|---|---|
| Date | 9/19/13 |
| JWSE Job No. | 11145 |
| Drawn By | |
| Checked By | |
| Scale | |

CONSTRUCTION DOCUMENTS

Drawing Title
PARTIAL PLANS

Drawing No.
**S2.6**

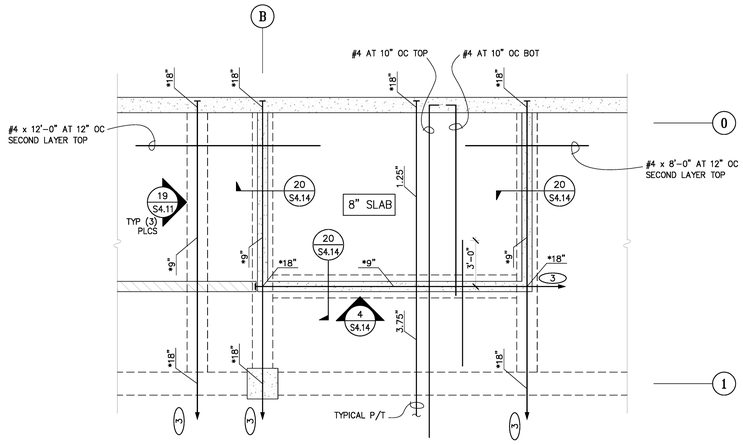


PARTIAL PLAN AT WATER TANK (B1 LEVEL)

NO SCALE

11
S2.10

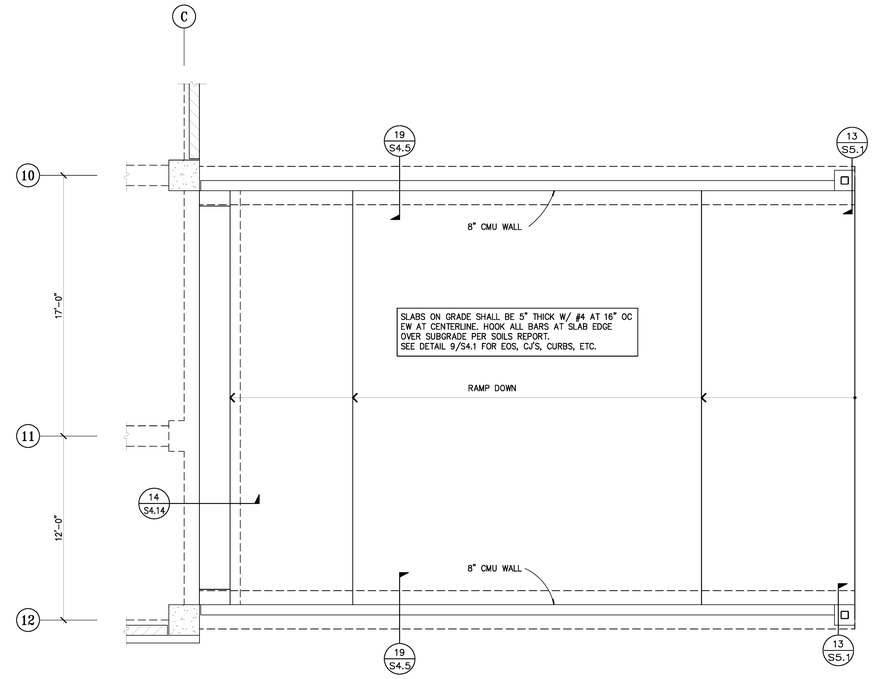


PARTIAL PLAN AT RAMP

NO SCALE

3
S2.10

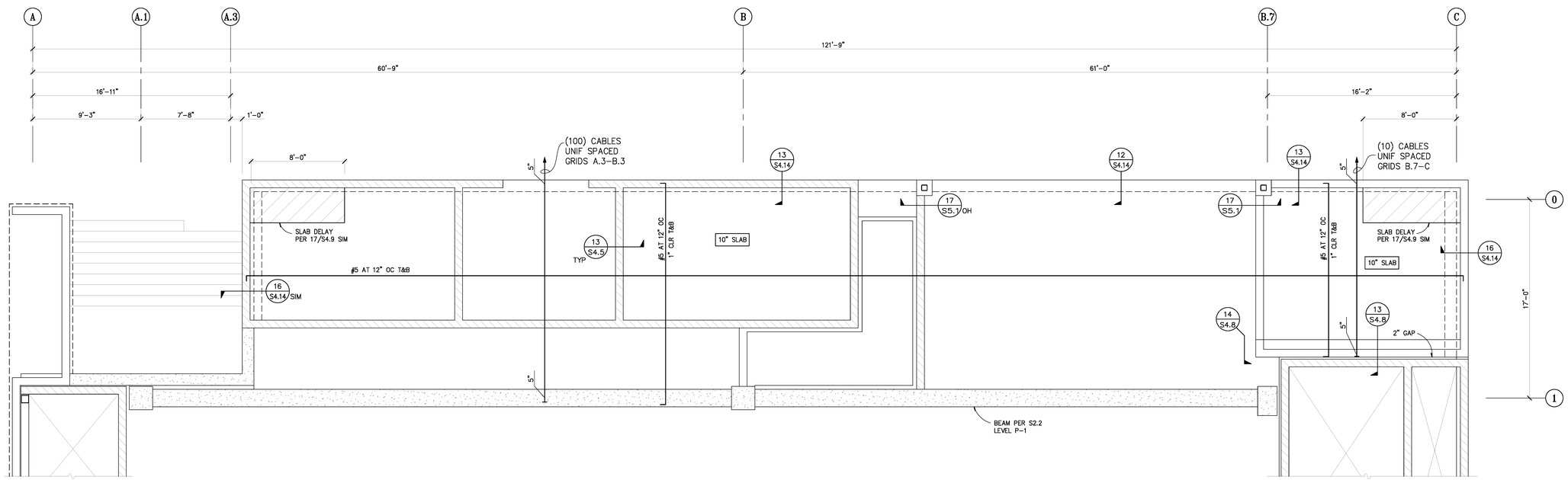


PARTIAL PLAN AT PLANTER SLAB

NO SCALE

1
S2.10

County of San Diego
Cedar & Kettner
Development Project
San Diego, California

McCARTHY

2040L S.W. BIRCH STREET SUITE 300
Newport Beach, California 92660

Architect

IPD

Alameda
Irvine
Los Angeles

Architecture / Engineering / Consulting
www.ipd-global.com

2 Faraday, Suite 101, Irvine CA 92618
Phone 949 595 8004 Fax 949 595 8011

JW JESSEN-WRIGHT
Structural Engineers

100 AMBER GROVE DRIVE, SUITE 109
CHICO, CALIFORNIA 95973
(530) 894-5345 FAX (530) 894-3016

REGISTERED PROFESSIONAL ENGINEER
KENT D. JESSEN
NO. 3283
EXP. 9/30/14
STRUCTURAL
STATE OF CALIFORNIA

| Revision | Date |
|---|---|
| 100% DESIGN DEVELOPMENT | 10/23/13 |
| 90% CDs - 1ST PLAN CHECK | 12/24/13 |
| 2ND PLAN CHECK | 04/23/14 |

| | |
|---|---|
| Date | 9/19/13 |
| JWSE Job No. | 11145 |
| Drawn By | |
| Checked By | |
| Scale | |

CONSTRUCTION
DOCUMENTS

Drawing Title
PARTIAL PLANS

Drawing No.
**S2.10**

IPD, Inc.

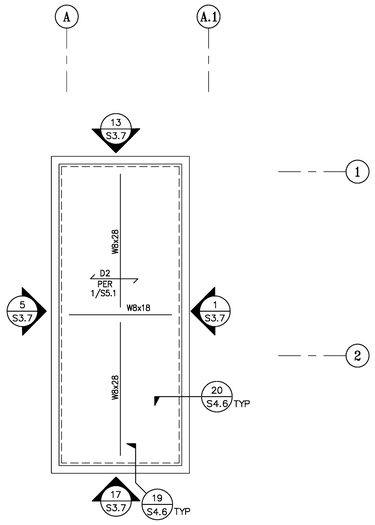


PARTIAL PLAN AT ROOF 19 S2.11
NO SCALE

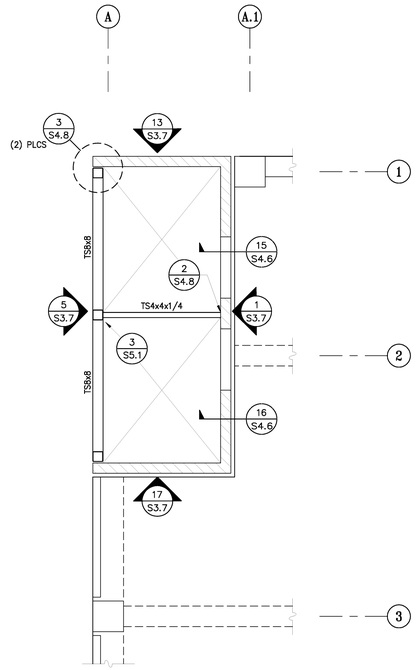


PARTIAL PLAN AT P7 LEVEL 15 S2.11
NO SCALE

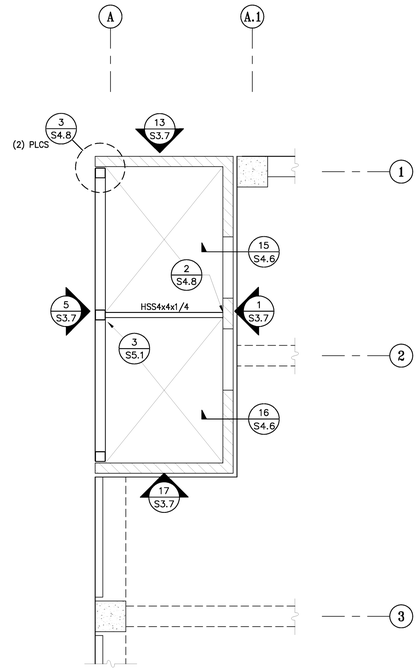


PARTIAL PLAN AT P3, P4, & P5 LEVEL 11 S2.11
NO SCALE

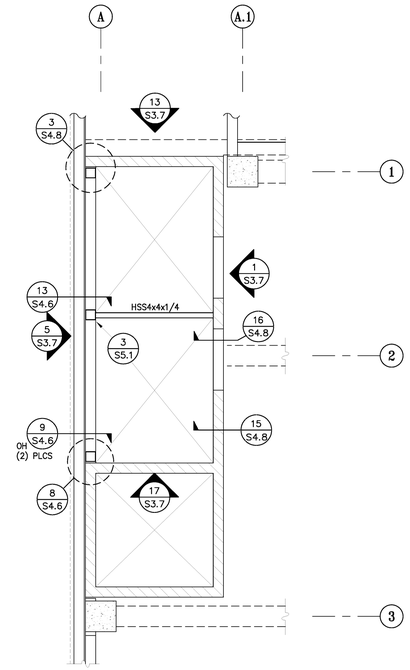


PARTIAL PLAN AT P1 LEVEL 7 S2.11
NO SCALE

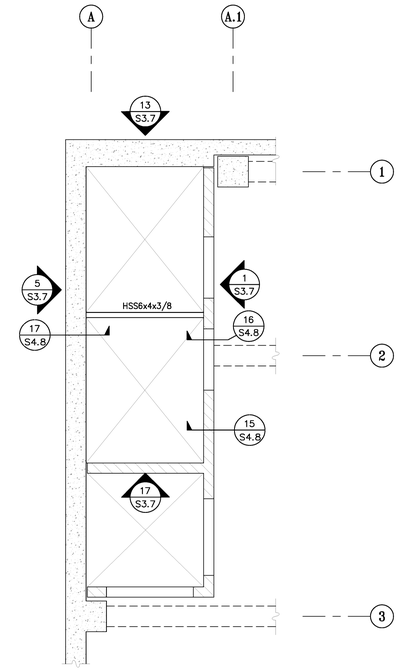


PARTIAL PLAN AT B2 LEVEL 3 S2.11
NO SCALE

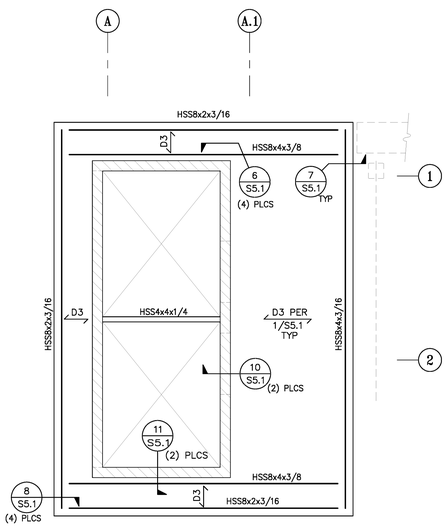


PARTIAL PLAN AT OVERHANG 17 S2.11
NO SCALE

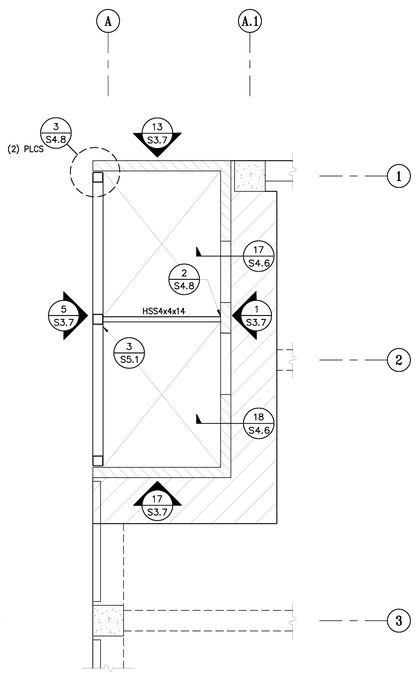


PARTIAL PLAN AT P6 LEVEL 13 S2.11
NO SCALE

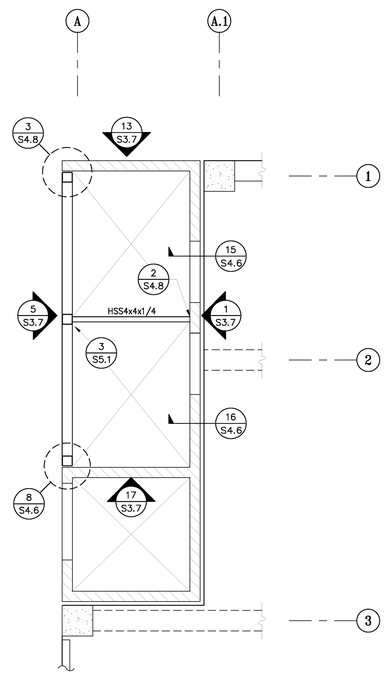


PARTIAL PLAN AT P2 LEVEL 9 S2.11
NO SCALE

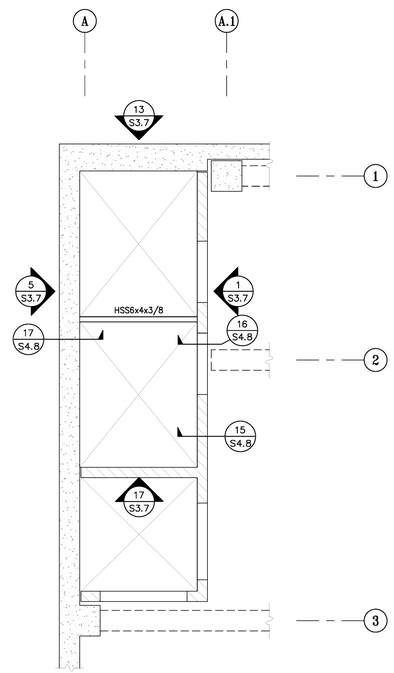


PARTIAL PLAN AT B1 LEVEL 5 S2.11
NO SCALE

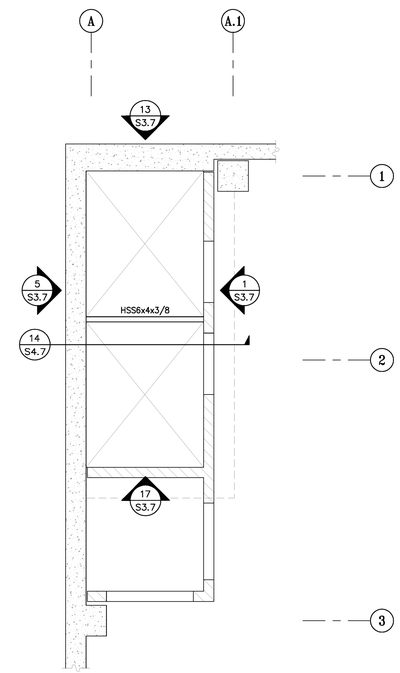


PARTIAL PLAN AT B3 LEVEL 1 S2.11
NO SCALE

County of San Diego
Cedar & Kettner
Development Project
San Diego, California

McCARTHY
2040L S.W. BIRCH STREET SUITE 300
Newport Beach, California 92660

Architect
IPD
Alameda
Irvine
Los Angeles
Architecture / Engineering / Consulting
www.ipd-global.com
2 Faraday, Suite 101, Irvine CA 92618
Phone 949 595 8004 Fax 949 595 8011

JW JESSEN-WRIGHT
Structural Engineers
100 AMBER GROVE DRIVE, SUITE 109
CHICO, CALIFORNIA 95973
(530) 894-5345 FAX (530) 894-3016

REGISTERED PROFESSIONAL ENGINEER KENT D. JESSEN NO. 2393 EXP. 6/30/14 STRUCTURAL STATE OF CALIFORNIA

| Revision | Date |
|---|---|
| 100% DESIGN DEVELOPMENT | 10/23/13 |
| 90% CDs - 1ST PLAN CHECK | 12/24/13 |
| 2ND PLAN CHECK | 04/23/14 |

| | |
|---|---|
| Date | 9/19/13 |
| JWSE Job No. | 11145 |
| Drawn By | |
| Checked By | |
| Scale | |

CONSTRUCTION DOCUMENTS

Drawing Title
PARTIAL PLANS AT ELEVATORS

Drawing No.
S2.11

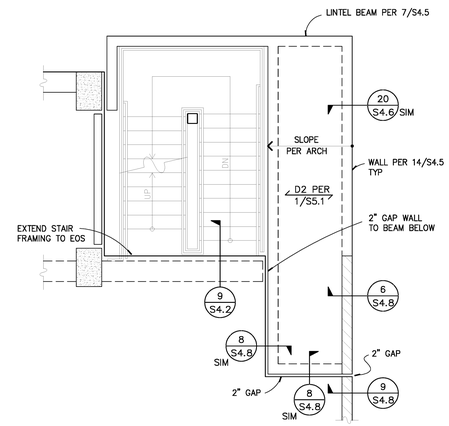


PARTIAL PLAN AT P3 LEVEL 7 S2.12

NO SCALE

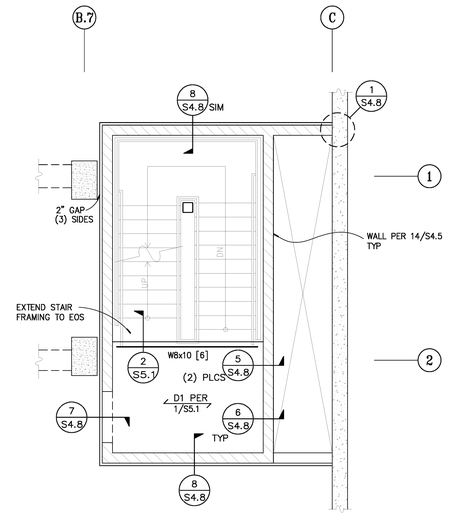


PARTIAL PLAN AT B1 LEVEL 3 S2.12

NO SCALE

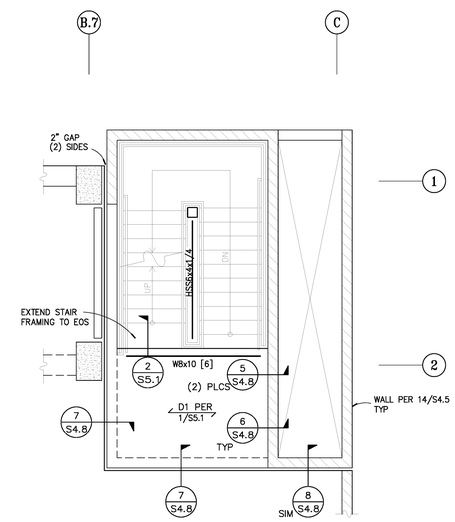


PARTIAL PLAN AT P2 LEVEL 6 S2.12

NO SCALE

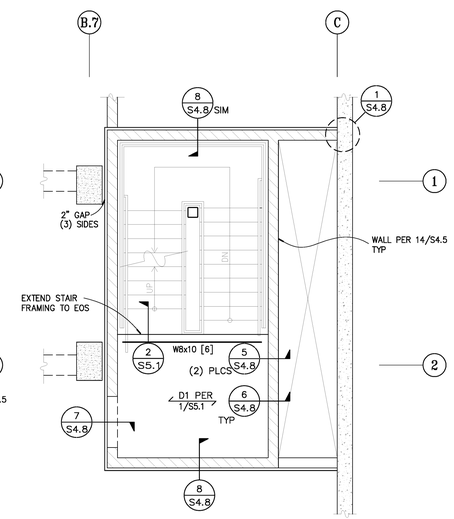


PARTIAL PLAN AT B2 LEVEL 2 S2.12

NO SCALE

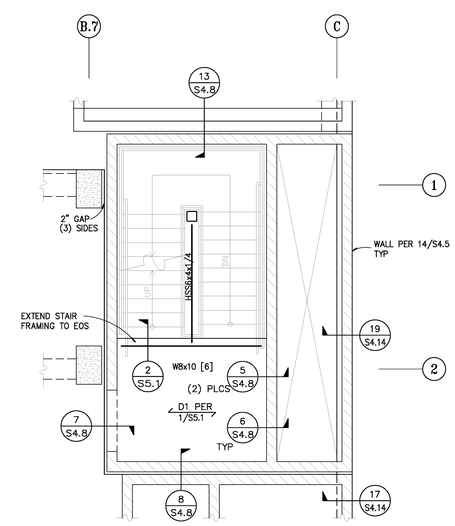


PARTIAL PLAN AT P1 LEVEL 5 S2.12

NO SCALE

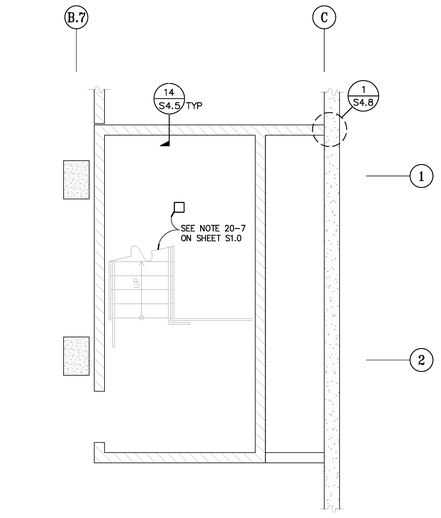


PARTIAL PLAN AT B3 LEVEL 1 S2.12

NO SCALE

**County of San Diego**
**Cedar & Kettner**
**Development Project**
San Diego, California

McCARTHY
20401 S.W. BIRCH STREET SUITE 300
Newport Beach, California 92660

Architect
IPD
Alameda
Irvine
Los Angeles
Architecture / Engineering / Consulting
www.ipd-global.com
2 Faraday, Suite 101, Irvine CA 92618
Phone 949 595 8004 Fax 949 595 8011

JW JESSEN-WRIGHT Structural Engineers
100 AMBER GROVE DRIVE, SUITE 109
CHICO, CALIFORNIA 95973
(530) 894-5345 FAX (530) 894-3016

REGISTERED PROFESSIONAL ENGINEER KENT D. JESSEN NO. 3363 EXP. 3/31/16 STATE OF CALIFORNIA

| Revision | Date |
|---|---|
| 100% DESIGN DEVELOPMENT | 10/23/13 |
| 90% CDs - 1ST PLAN CHECK | 12/24/13 |
| 2ND PLAN CHECK | 04/23/14 |

| | |
|---|---|
| Date | 9/19/13 |
| JWSE Job No. | 11145 |
| Drawn By | |
| Checked By | |
| Scale | |

CONSTRUCTION DOCUMENTS

Drawing Title
PARTIAL PLANS AT STAIR

Drawing No.
**S2.12**

PD, Inc.

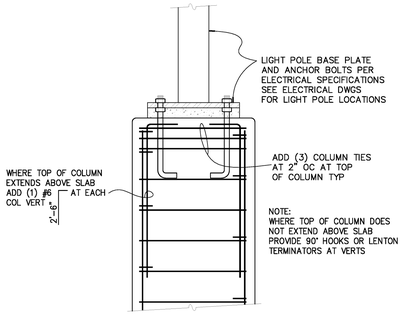


SECTION 20 S3.1
NO SCALE

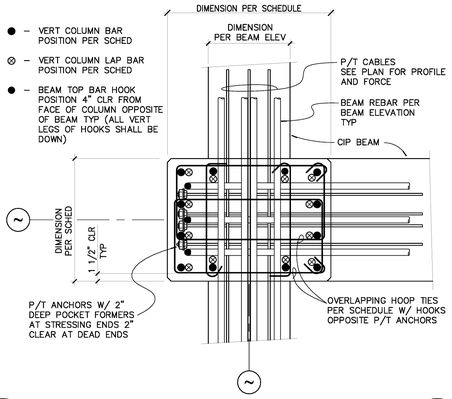


PLAN–SECTION 16 S3.1
NO SCALE

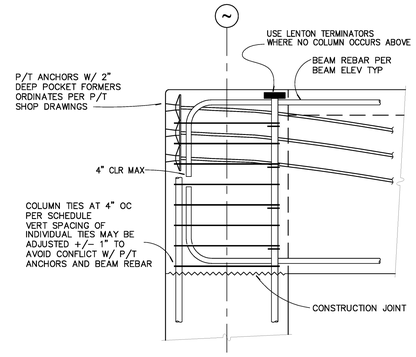


SECTION AT COLUMN–BEAM JOINT 12 S3.1
NO SCALE

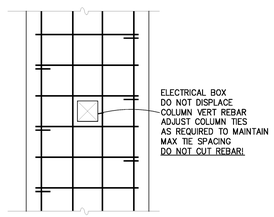


DETAIL 19 S3.1
NO SCALE

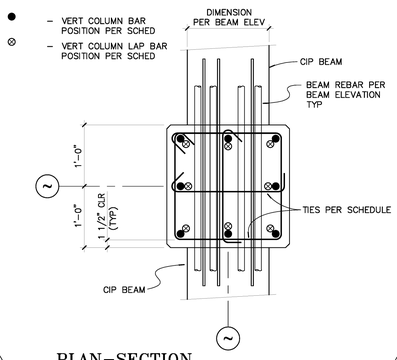


PLAN–SECTION 15 S3.1
NO SCALE

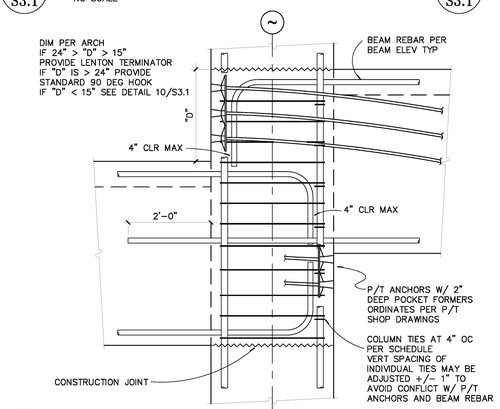


SECTION AT COLUMN–BEAM JOINT 11 S3.1
NO SCALE

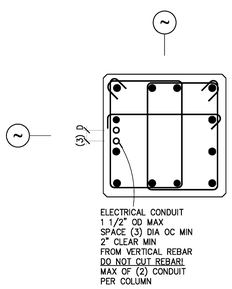


PLAN–SECTION 18 S3.1
NO SCALE

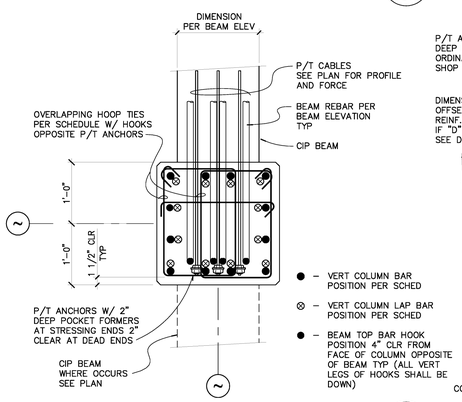


PLAN–SECTION 14 S3.1
NO SCALE

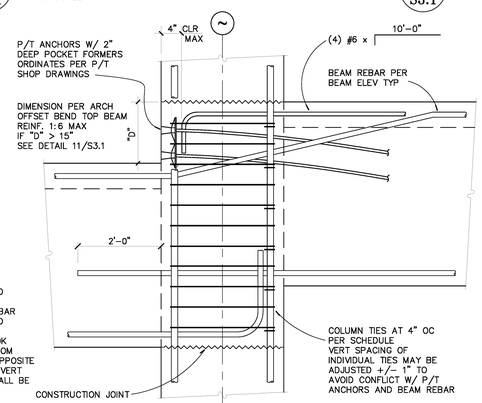


SECTION AT COLUMN–BEAM JOINT 10 S3.1
NO SCALE

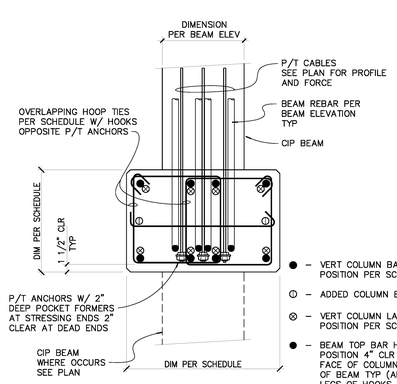


PLAN–SECTION 17 S3.1
NO SCALE

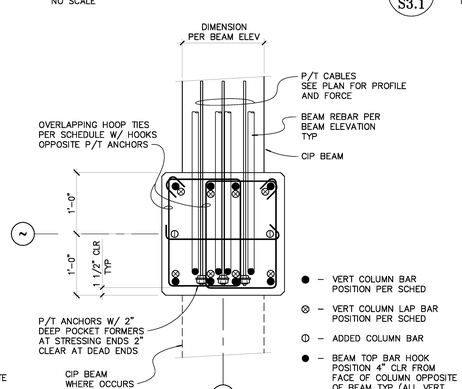


PLAN–SECTION 13 S3.1
NO SCALE

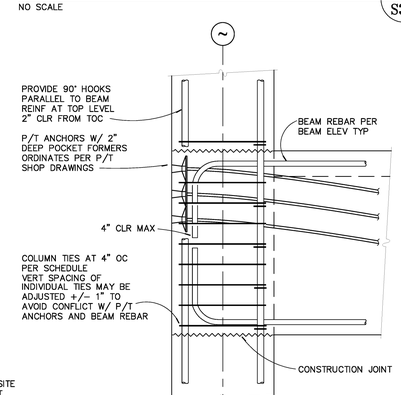


SECTION AT COLUMN–BEAM JOINT 9 S3.1
NO SCALE

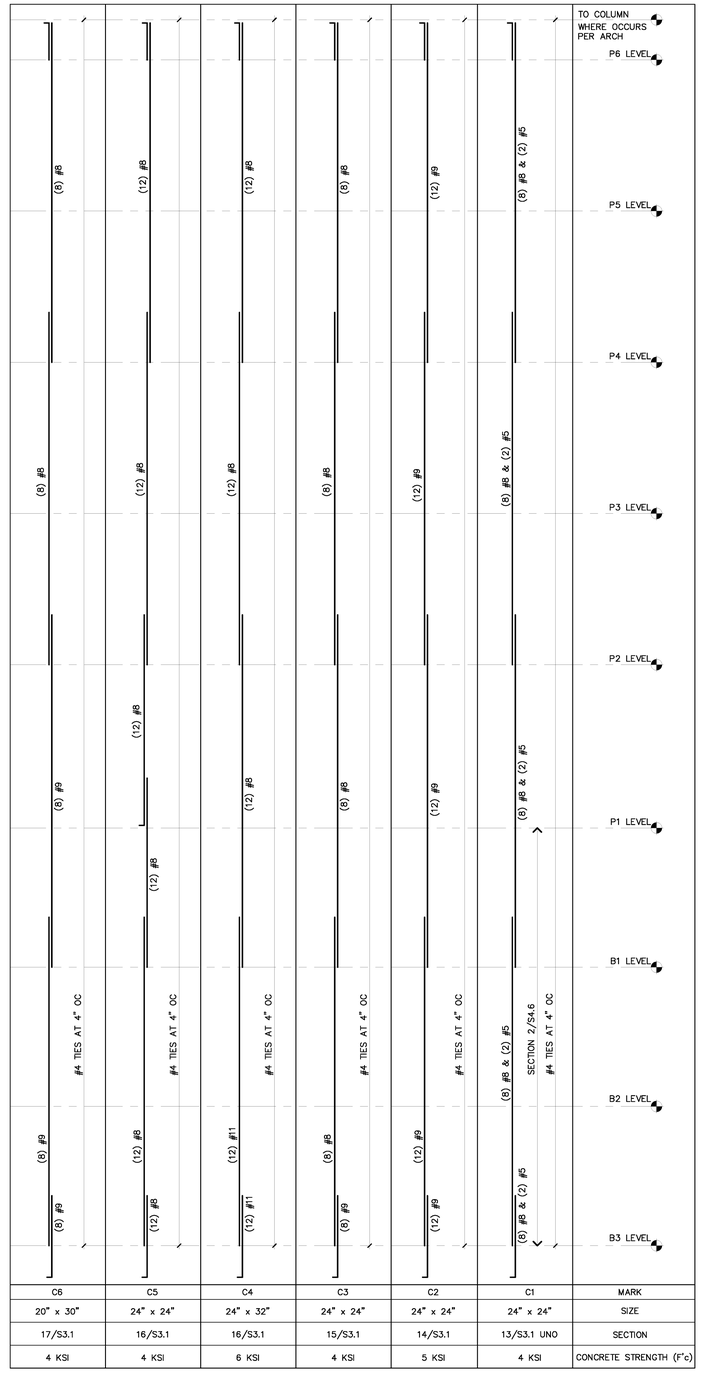


| | C6 | C5 | C4 | C3 | C2 | C1 | MARK |
|---|---|---|---|---|---|---|---|
| | 20" x 30" | 24" x 24" | 24" x 32" | 24" x 24" | 24" x 24" | 24" x 24" | SIZE |
| | 17/S3.1 | 16/S3.1 | 16/S3.1 | 15/S3.1 | 14/S3.1 | 13/S3.1 UNO | SECTION |
| | 4 KSI | 4 KSI | 6 KSI | 4 KSI | 5 KSI | 4 KSI | CONCRETE STRENGTH (F'c) |

NOTES

1. AT TOP OF COL SEE 20/S3.1
2. ADD (3) TIES AT 2" OC AT TOP OF COLUMN, TYP.
3. LENTON REBAR TERMINATOR MAY BE SUBSTITUTED FOR 90 HOOKS AT TOP OF COLUMNS AT CONTRS OPTION.
4. SEE DETAILS 18 & 19/S3.1 FOR PERMISSIBLE CONDUIT IN COLUMNS.

COLUMN SCHEDULE 1 S3.1
NO SCALE

**County of San Diego Cedar & Kettner Development Project**
San Diego, California

McCARTHY
2040L S.W. BIRCH STREET SUITE 300
Newport Beach, California 92660

Architect
IPD
Alameda
Irvine
Los Angeles
Architecture / Engineering / Consulting
www.ipd-global.com
2 Faraday, Suite 101, Irvine CA 92618
Phone 949 595 8004 Fax 949 595 8011

JW JESSEN-WRIGHT Structural Engineers
100 AMBER GROVE DRIVE, SUITE 109
CHICO, CALIFORNIA 95973
(530) 894-5345 FAX (530) 894-3016

REGISTERED PROFESSIONAL ENGINEER KENT D. JESSEN NO. 3398 EXP. 3/31/15 STRUCTURAL STATE OF CALIFORNIA

| Revision | Date |
|---|---|
| 100% DESIGN DEVELOPMENT | 10/23/13 |
| 90% CDs - 1ST PLAN CHECK | 12/24/13 |
| 2ND PLAN CHECK | 04/23/14 |

| | |
|---|---|
| Date | 9/19/13 |
| JWSE Job No. | 11145 |
| Drawn By | |
| Checked By | |
| Scale | |

CONSTRUCTION DOCUMENTS

Drawing Title
COLUMN SCHEDULE & DETAILS

Drawing No.
**S3.1**

IPD, Inc.

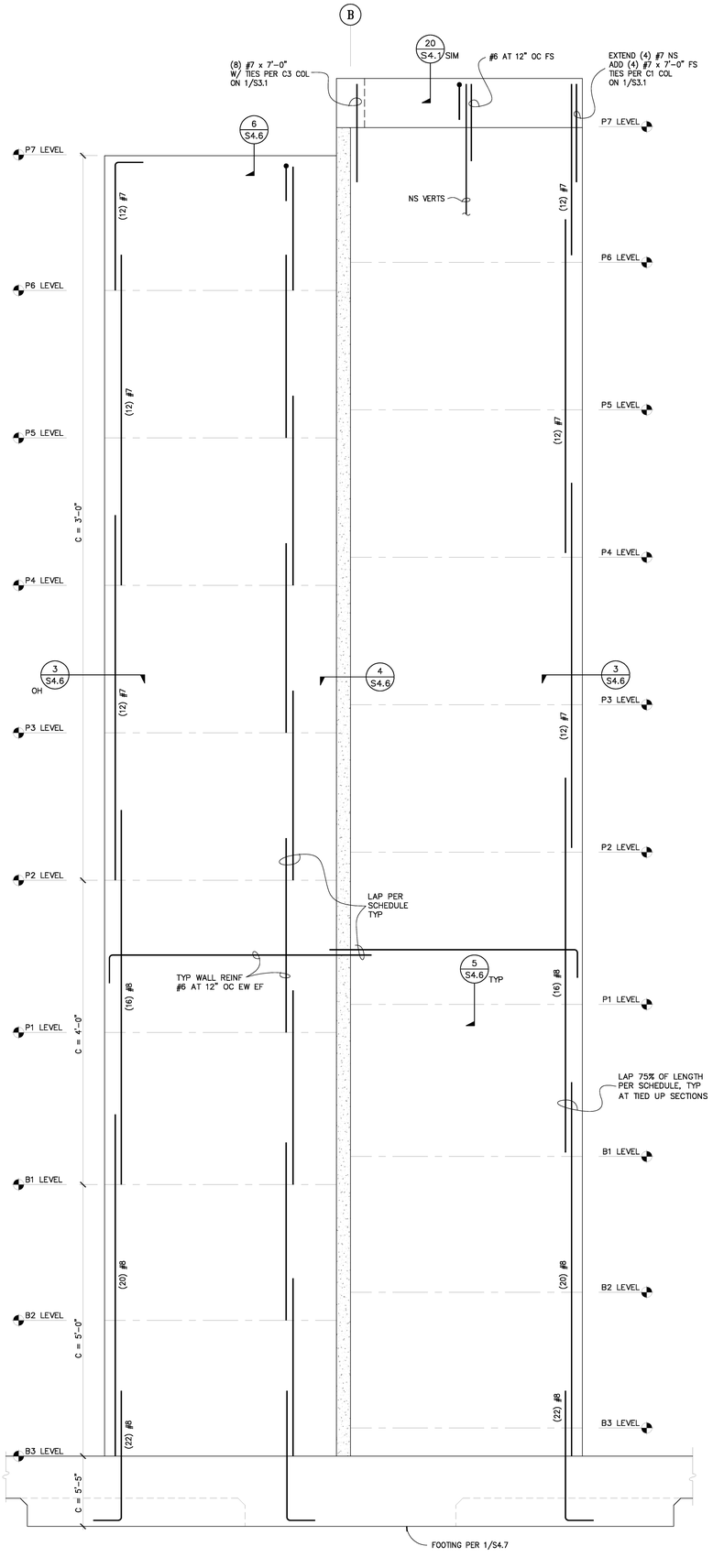


SHEARWALL ELEVATION AT GRID 5 – NOTE: f'c = 5000 psi

NO SCALE

5 S3.2

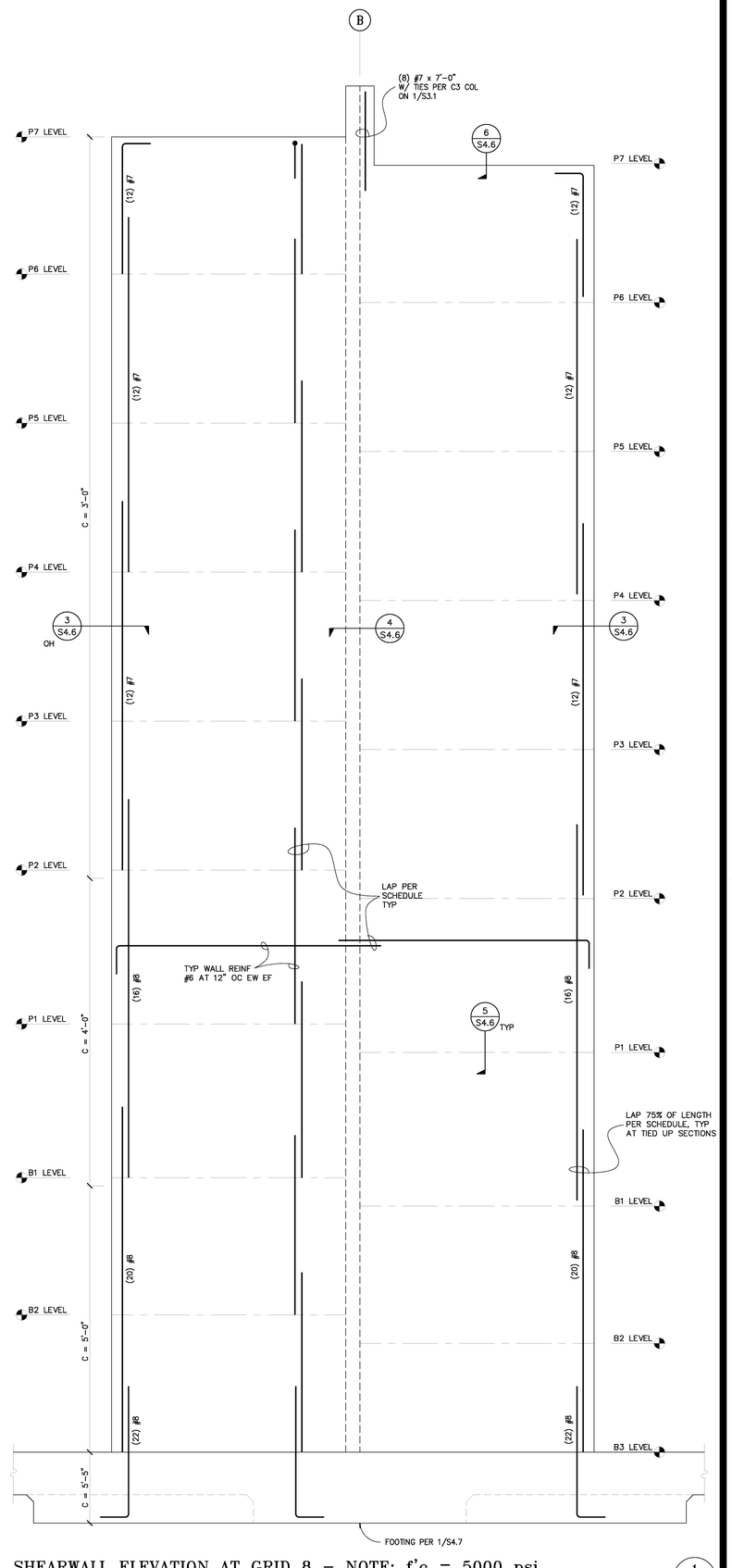


SHEARWALL ELEVATION AT GRID 8 – NOTE: f'c = 5000 psi

NO SCALE

1 S3.2

**County of San Diego**
**Cedar & Kettner**
**Development Project**
San Diego, California

McCARTHY
20401 S.W. BIRCH STREET SUITE 300
Newport Beach, California 92660

Architect
IPD
Alameda
Irvine
Los Angeles
Architecture / Engineering / Consulting
www.ipd-global.com
2 Faraday, Suite 101, Irvine CA 92618
Phone 949 595 8004 Fax 949 595 8011

JW JESSEN-WRIGHT Structural Engineers
100 AMBER GROVE DRIVE, SUITE 109
CHICO, CALIFORNIA 95973
(530) 894-5345 FAX (530) 894-3016

REGISTERED PROFESSIONAL ENGINEER KENT D. JESSEN NO. 3393 EXP. 3/31/16 STATE OF CALIFORNIA

| Revision | Date |
|---|---|
| 100% DESIGN DEVELOPMENT | 10/23/13 |
| 90% CDs - 1ST PLAN CHECK | 12/24/13 |
| 2ND PLAN CHECK | 04/23/14 |

| | |
|---|---|
| Date | 9/19/13 |
| JWSE Job No. | 11145 |
| Drawn By | |
| Checked By | |
| Scale | |

CONSTRUCTION DOCUMENTS

Drawing Title
SHEARWALL ELEVATIONS

Drawing No.
**S3.2**

PARTIAL ELEVATION AT GRID A

NO SCALE

2
S3.2a

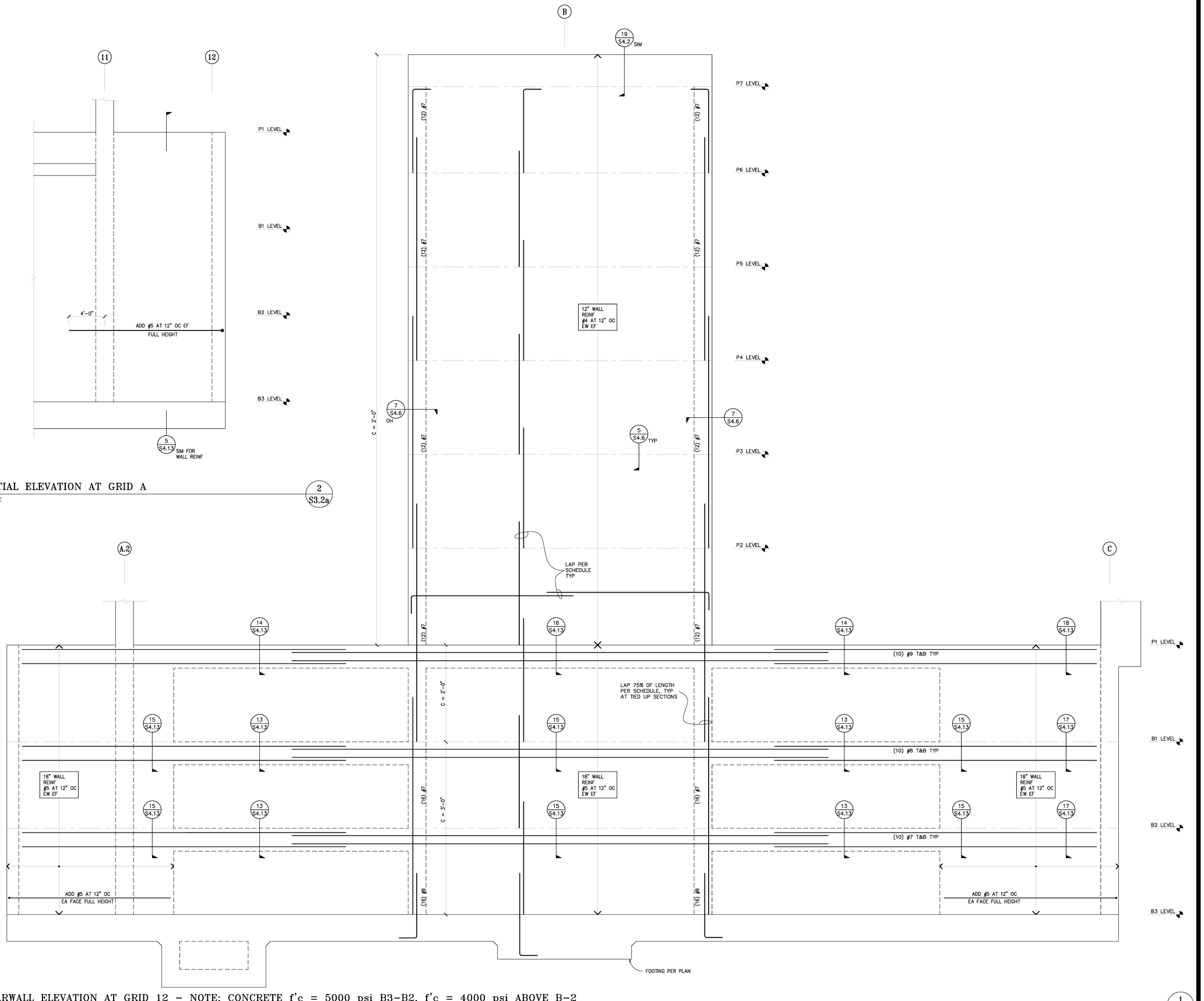


SHEARWALL ELEVATION AT GRID 12 – NOTE: CONCRETE f'c = 5000 psi B3–B2, f'c = 4000 psi ABOVE B–2

NO SCALE

1
S3.2a

County of San Diego
Cedar & Kettner
Development Project
San Diego, California

McCARTHY
20401 S.W. BIRCH STREET SUITE 300
Newport Beach, California 92660

Architect
IPD
Alameda
Irvine
Los Angeles
Architecture / Engineering / Consulting
www.ipd-global.com
2 Faraday, Suite 101, Irvine CA 92618
Phone 949 595 8004 Fax 949 595 8011

JW JESSEN-WRIGHT
Structural Engineers
100 AMBER GROVE DRIVE, SUITE 109
CHICO, CALIFORNIA 95973
(530) 894-5345 FAX (530) 894-3016

REGISTERED PROFESSIONAL ENGINEER
KENT D. JESSEN
NO. 3333
EXP. 3/31/15
STATE OF CALIFORNIA

| Revision | Date |
|---|---|
| 100% DESIGN DEVELOPMENT | 10/23/13 |
| 90% CDs - 1ST PLAN CHECK | 12/24/13 |
| 2ND PLAN CHECK | 04/23/14 |

| | |
|---|---|
| Date | 9/19/13 |
| JWSE Job No. | 11145 |
| Drawn By | |
| Checked By | |
| Scale | |

CONSTRUCTION DOCUMENTS

Drawing Title

SHEARWALL ELEVATION

Drawing No.

S3.2a

IPD, Inc.

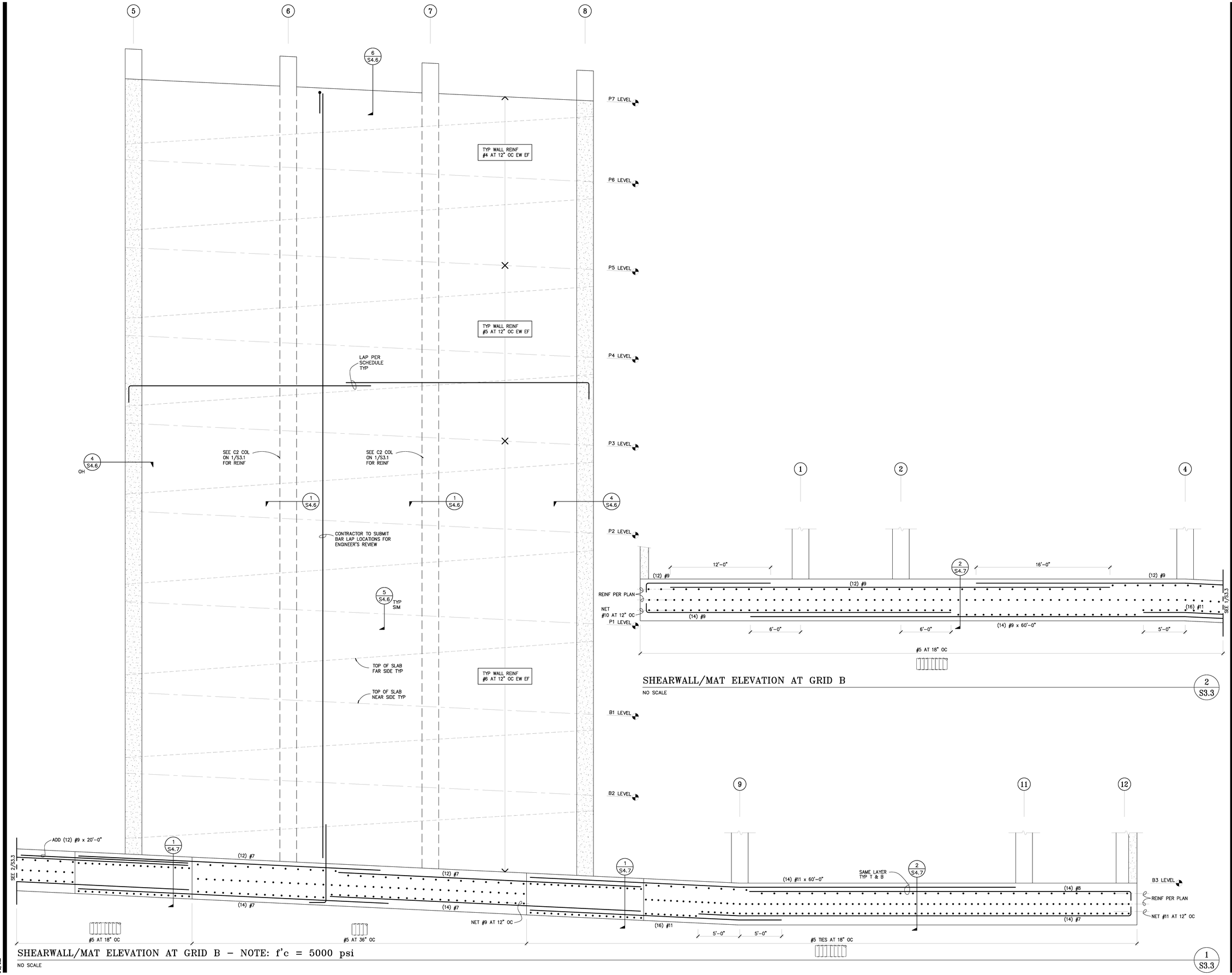


SHEARWALL/MAT ELEVATION AT GRID B

NO SCALE

2 S3.3



SHEARWALL/MAT ELEVATION AT GRID B – NOTE: f'c = 5000 psi

NO SCALE

1 S3.3

County of San Diego
Cedar & Kettner
Development Project
San Diego, California

McCARTHY
20401 S.W. BIRCH STREET SUITE 300
Newport Beach, California 92660

Architect
IPD
Alameda
Irvine
Los Angeles
Architecture / Engineering / Consulting
www.ipd-global.com
2 Faraday, Suite 101, Irvine CA 92618
Phone 949 595 8004 Fax 949 595 8011

JW JESSEN-WRIGHT Structural Engineers
100 AMBER GROVE DRIVE, SUITE 109
CHICO, CALIFORNIA 95973
(530) 894-5345 FAX (530) 894-3016

REGISTERED PROFESSIONAL ENGINEER KENT D. JESSEN STATE OF CALIFORNIA

| Revision | Date |
|---|---|
| 100% DESIGN DEVELOPMENT | 10/23/13 |
| 90% CDs - 1ST PLAN CHECK | 12/24/13 |
| 2ND PLAN CHECK | 04/23/14 |

| | |
|---|---|
| Date | 9/19/13 |
| JWSE Job No. | 11145 |
| Drawn By | |
| Checked By | |
| Scale | |

CONSTRUCTION DOCUMENTS

Drawing Title
SHEARWALL ELEVATION

Drawing No.
S3.3

IPD, Inc.

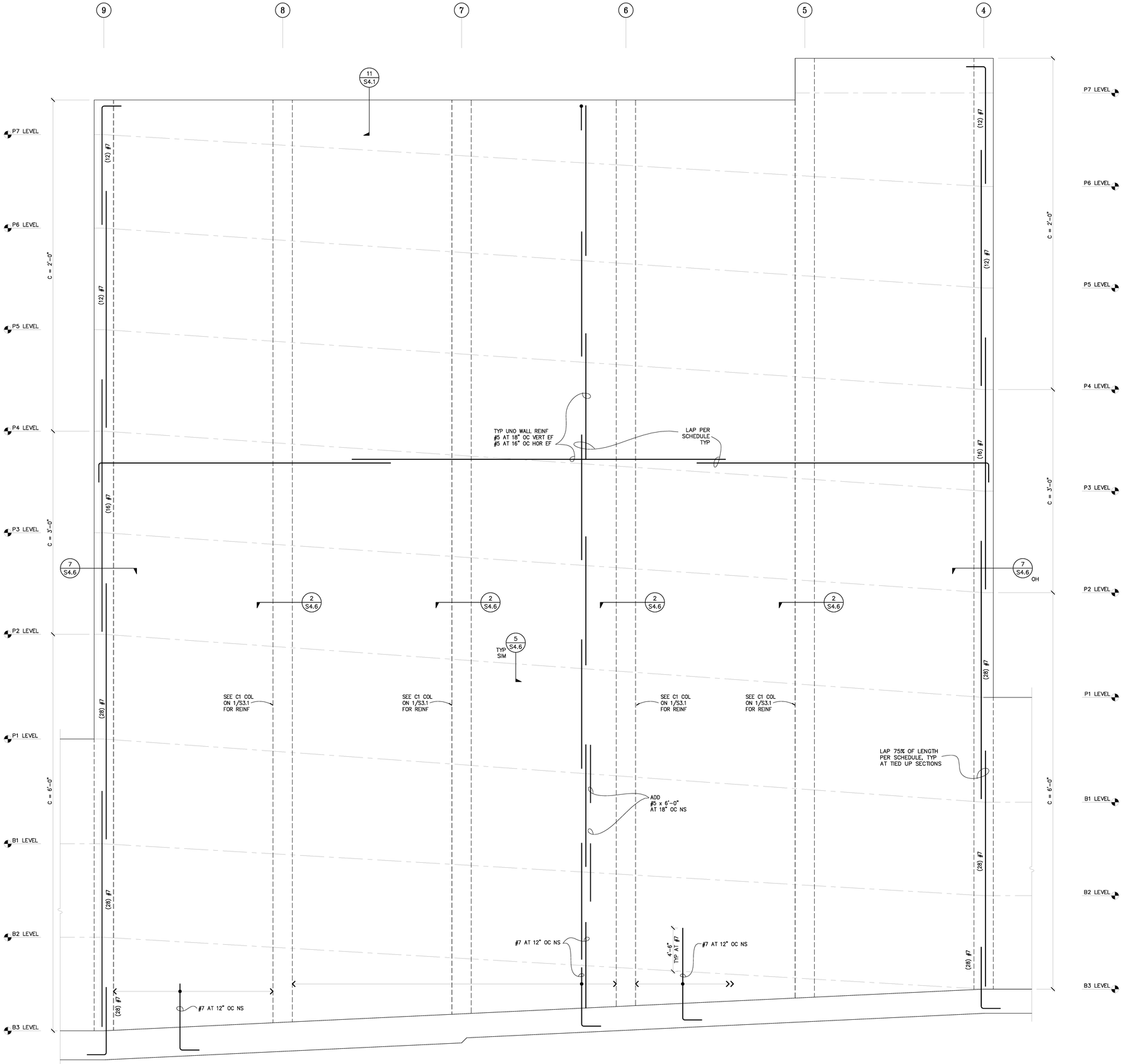


SHEARWALL ELEVATION AT GRID C – NOTE: CONCRETE f'c = 5000 psi B3–B2, f'c = 4000 psi ABOVE B–2

NO SCALE

1
S3.4

**County of San Diego**
**Cedar & Kettner**
**Development Project**
San Diego, California

McCARTHY
20401 S.W. BIRCH STREET SUITE 300
Newport Beach, California 92660

Architect
IPD
Alameda
Irvine
Los Angeles
Architecture / Engineering / Consulting
www.ipd-global.com
2 Faraday, Suite 101, Irvine CA 92618
Phone 949 595 8004 Fax 949 595 8011

JW JESSEN-WRIGHT
Structural Engineers
100 AMBER GROVE DRIVE, SUITE 109
CHICO, CALIFORNIA 95973
(530) 894-5345 FAX (530) 894-3016

REGISTERED PROFESSIONAL ENGINEER
KENT D. JESSEN
NO. 3383
EXP. 3/31/15
STATE OF CALIFORNIA

| Revision | Date |
|---|---|
| 100% DESIGN DEVELOPMENT | 10/23/13 |
| 90% CDs - 1ST PLAN CHECK | 12/24/13 |
| 2ND PLAN CHECK | 04/23/14 |

| | |
|---|---|
| Date | 9/19/13 |
| JWSE Job No. | 11145 |
| Drawn By | |
| Checked By | |
| Scale | |

CONSTRUCTION DOCUMENTS

Drawing Title
SHEARWALL ELEVATION

Drawing No.
**S3.4**

IPD, Inc.

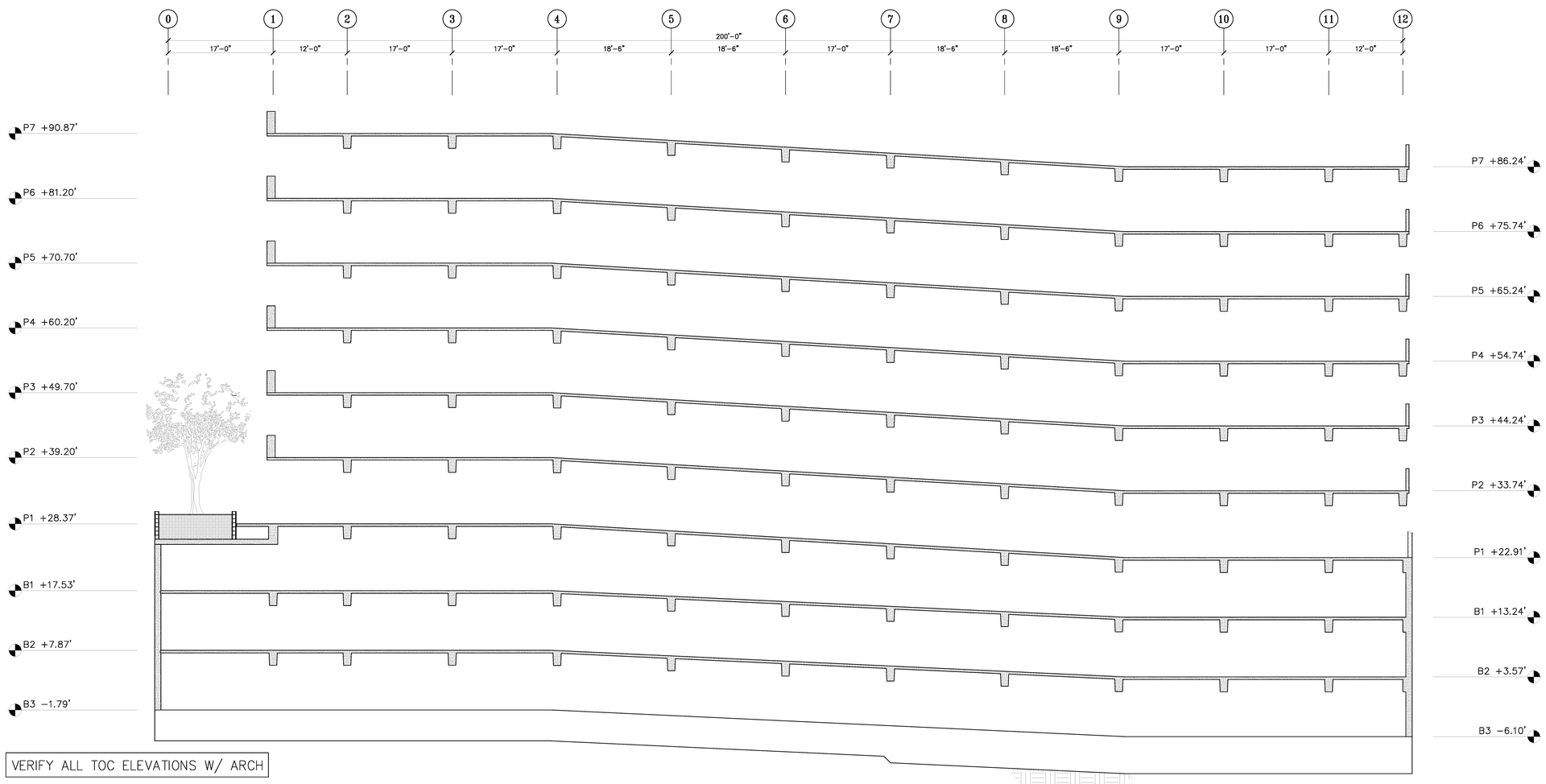


VERIFY ALL TOC ELEVATIONS W/ ARCH

BUILDING SECTION BETWEEN GRIDS A & B

NO SCALE

1
S3.5

**County of San Diego**
**Cedar & Kettner**
**Development Project**
San Diego, California

McCARTHY

20401 S.W. BIRCH STREET SUITE 300
Newport Beach, California 92660

Architect

Alameda
Irvine
Los Angeles

IPD

Architecture / Engineering / Consulting
www.ipd-global.com

2 Faraday, Suite 101, Irvine CA 92618
Phone 949 595 8004 Fax 949 595 8011

JW JESSEN-WRIGHT
Structural Engineers

100 AMBER GROVE DRIVE, SUITE 109
CHICO, CALIFORNIA 95973
(530) 894-5345 FAX (530) 894-3016

REGISTERED PROFESSIONAL ENGINEER
KENT D. JESSEN
NO. 3393
EXP. 3/31/06
STATE OF CALIFORNIA

| Revision | Date |
|---|---|
| 100% DESIGN DEVELOPMENT | 10/23/13 |
| 90% CDs - 1ST PLAN CHECK | 12/24/13 |
| 2ND PLAN CHECK | 04/23/14 |

| | |
|---|---|
| Date | 9/19/13 |
| JWSE Job No. | 11145 |
| Drawn By | |
| Checked By | |
| Scale | |

CONSTRUCTION DOCUMENTS

Drawing Title

RAMP SECTION

Drawing No.

**S3.5**

IPD, Inc.

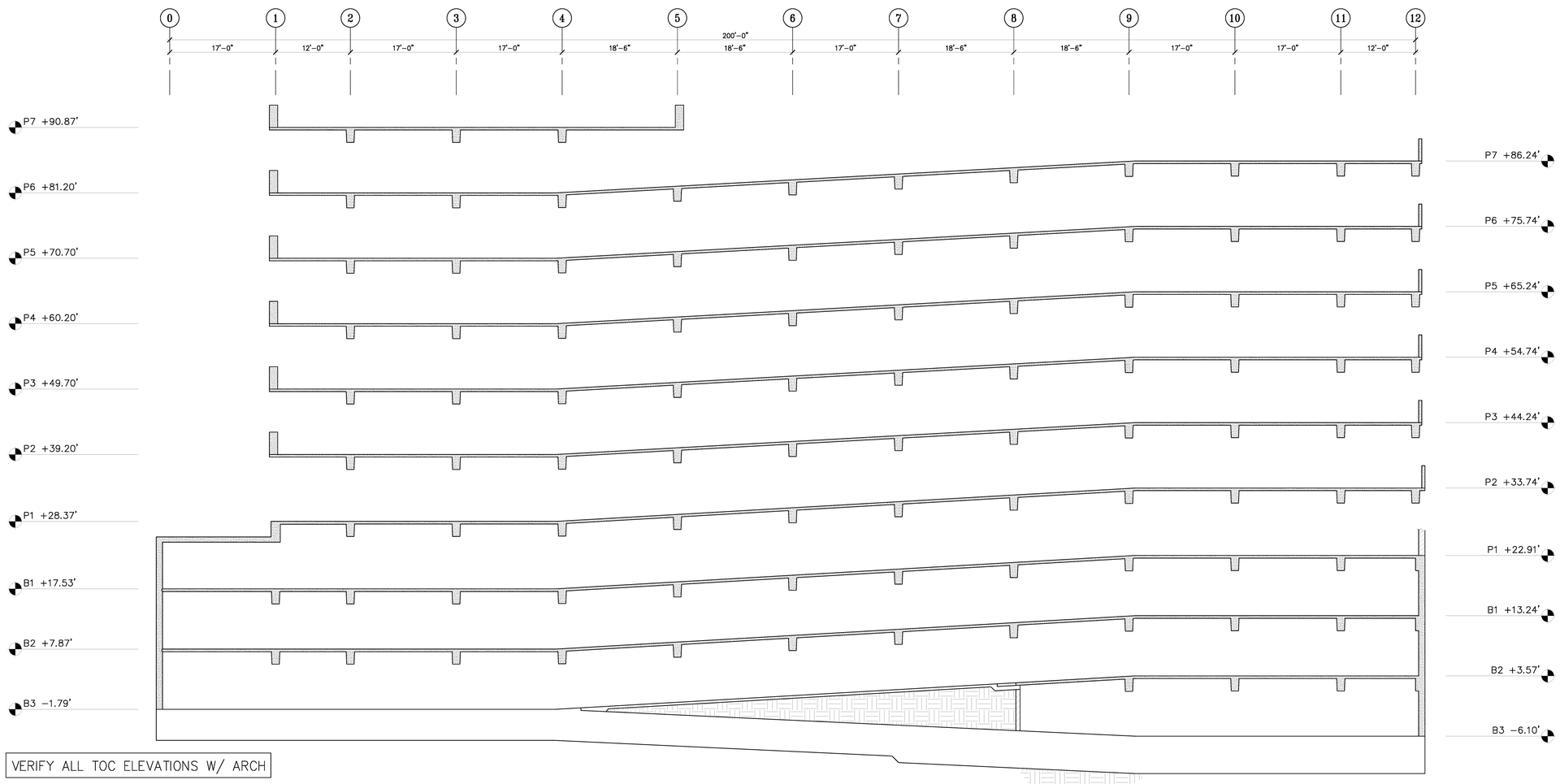


VERIFY ALL TOC ELEVATIONS W/ ARCH

BUILDING SECTION BETWEEN GRIDS B & C

NO SCALE

1
S3.6

County of San Diego
Cedar & Kettner
Development Project
San Diego, California

McCARTHY

20401 S.W. BIRCH STREET SUITE 300
Newport Beach, California 92660

Architect

Alameda
Irvine
Los Angeles

IPD

Architecture / Engineering / Consulting
www.ipd-global.com

2 Faraday, Suite 101, Irvine CA 92618
Phone 949 595 8004 Fax 949 595 8011

JW JESSEN-WRIGHT
Structural Engineers

100 AMBER GROVE DRIVE, SUITE 109
CHICO, CALIFORNIA 95973
(530) 894-5345 FAX (530) 894-3016

REGISTERED PROFESSIONAL ENGINEER
KENT D. JESSEN
NO. 3393
EXP. 3/31/16
STATE OF CALIFORNIA

| Revision | Date |
|---|---|
| 100% DESIGN DEVELOPMENT | 10/23/13 |
| 90% CDs - 1ST PLAN CHECK | 12/24/13 |
| 2ND PLAN CHECK | 04/23/14 |

| | |
|---|---|
| Date | 9/19/13 |
| JWSE Job No. | 11145 |
| Drawn By | |
| Checked By | |
| Scale | |

CONSTRUCTION DOCUMENTS

Drawing Title

BUILDING SECTION

Drawing No.

S3.6

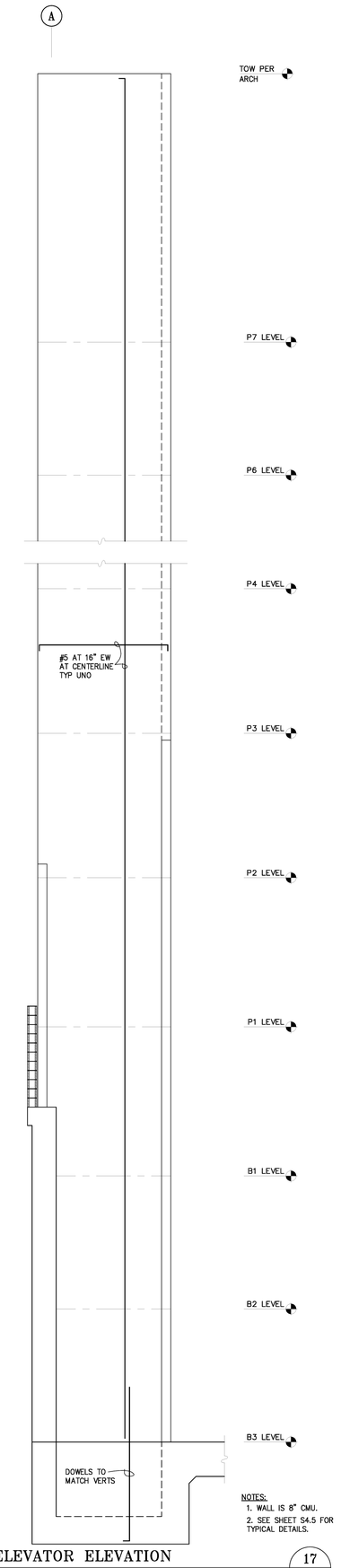


ELEVATOR ELEVATION 17 S3.7
NO SCALE

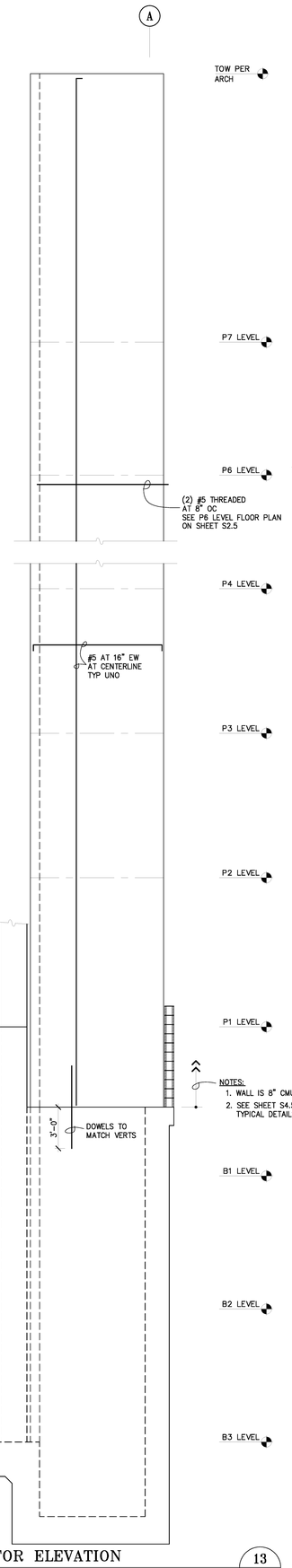


ELEVATOR ELEVATION 13 S3.7
NO SCALE

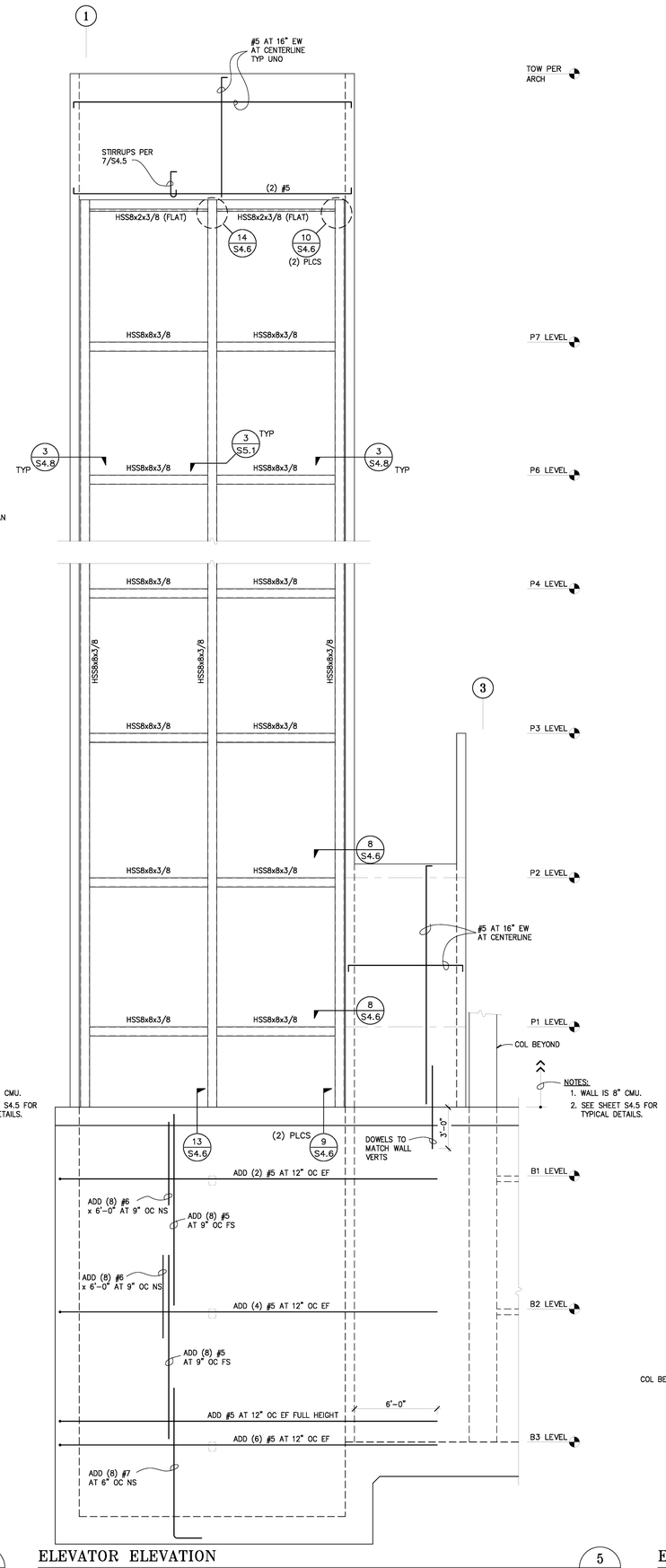


ELEVATOR ELEVATION 5 S3.7
NO SCALE

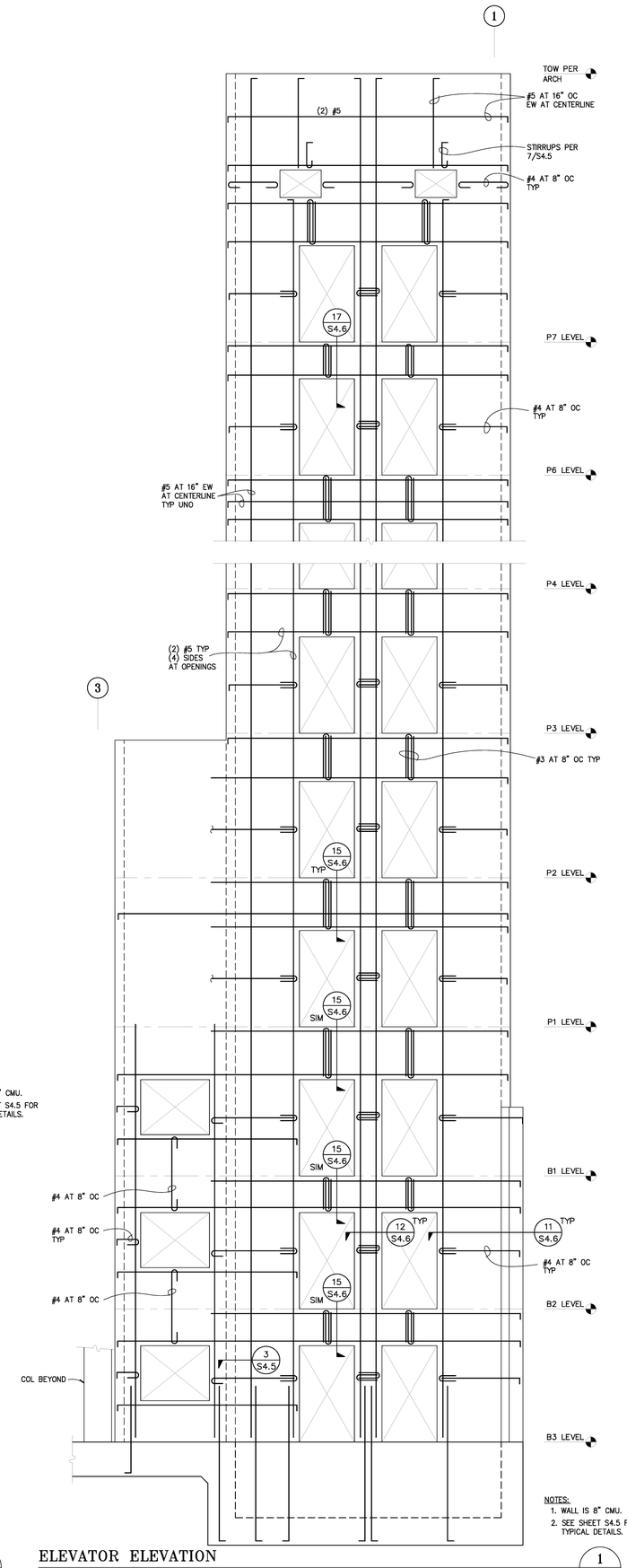


ELEVATOR ELEVATION 1 S3.7
NO SCALE

**County of San Diego Cedar & Kettner Development Project**
San Diego, California

McCARTHY
2040L S.W. BIRCH STREET SUITE 300
Newport Beach, California 92660

Architect
IPD
Alameda
Irvine
Los Angeles
Architecture / Engineering / Consulting
www.ipd-global.com
2 Faraday, Suite 101, Irvine CA 92618
Phone 949 595 8004 Fax 949 595 8011

JW JESSEN-WRIGHT Structural Engineers
100 AMBER GROVE DRIVE, SUITE 109
CHICO, CALIFORNIA 95973
(530) 894-5345 FAX (530) 894-3016

REGISTERED PROFESSIONAL ENGINEER KENT D. JESSEN NO. 3393 EXP. 9/30/14 STRUCTURAL STATE OF CALIFORNIA

| Revision | Date |
|---|---|
| 100% DESIGN DEVELOPMENT | 10/23/13 |
| 90% CDs - 1ST PLAN CHECK | 12/24/13 |
| 2ND PLAN CHECK | 04/23/14 |

| | |
|---|---|
| Date | 9/19/13 |
| JWSE Job No. | 11145 |
| Drawn By | |
| Checked By | |
| Scale | |

CONSTRUCTION DOCUMENTS

Drawing Title
ELEVATOR ELEVATIONS

Drawing No.
**S3.7**

IPD, Inc.

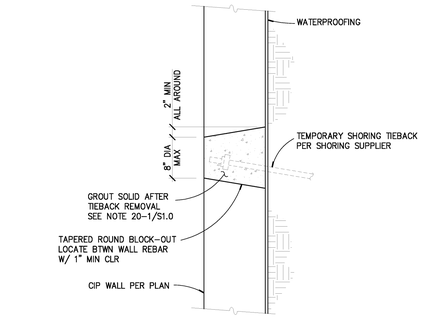


SECTION 20/S4.1
NO SCALE

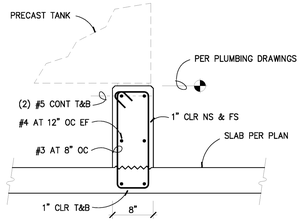


TANK CURBS 16/S4.1
NO SCALE

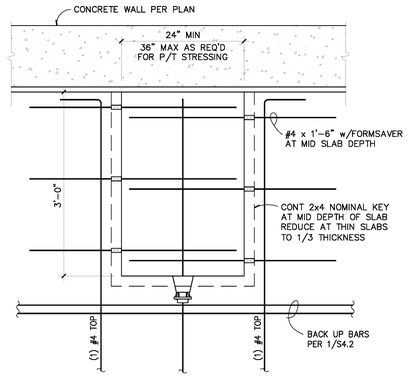


TEMPORARY SLAB BLOCKOUT 12/S4.1
NO SCALE

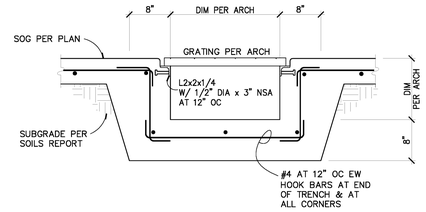


TRENCH DETAIL 8/S4.1
NO SCALE

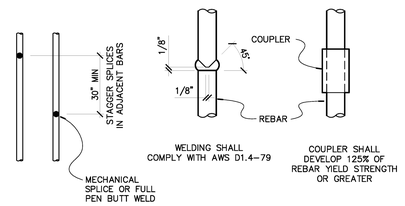


REBAR TENSION SPLICE DETAIL 4/S4.1
NO SCALE

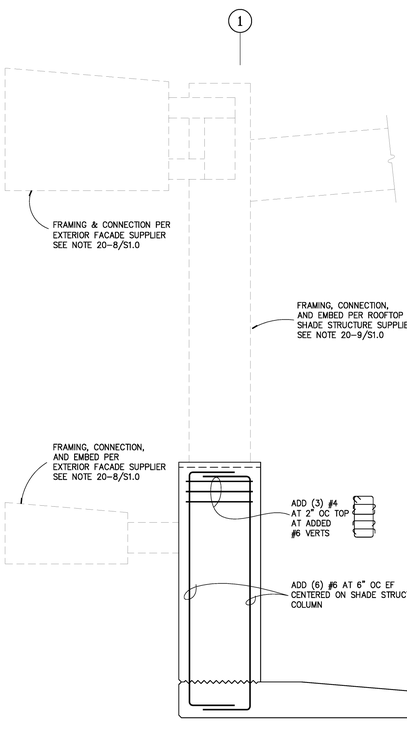


SECTION 18/S4.1
NO SCALE

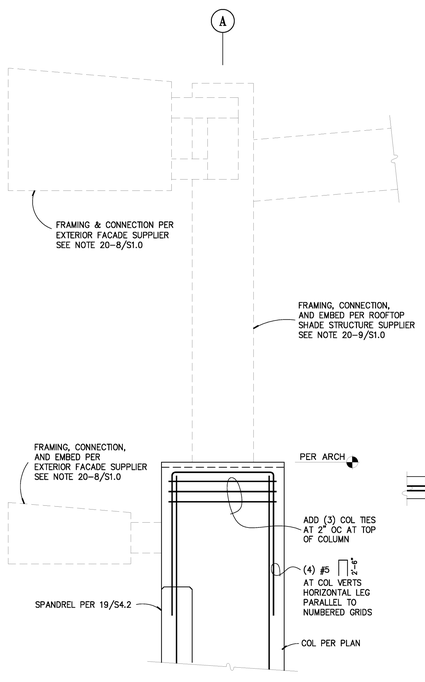


SECTION 14/S4.1
NO SCALE

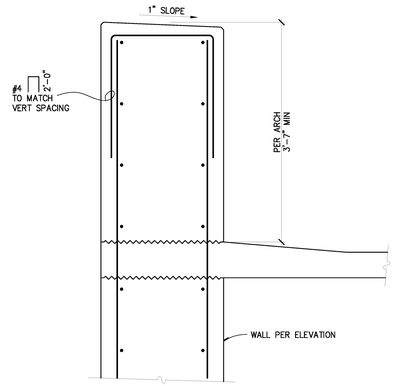


SECTION 11/S4.1
NO SCALE

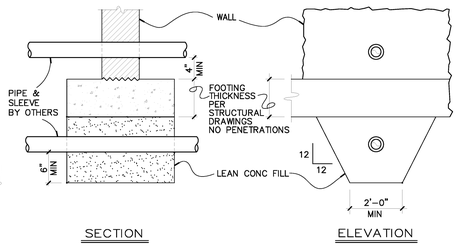


PIPE/FOOTING INTERSECTION 7/S4.1
NO SCALE

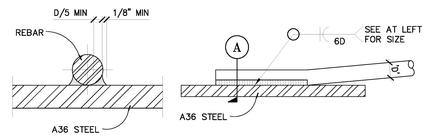


SECTION A

NOTES:

1. REBAR SHALL BE ASTM A706.
2. ALL PREHEATING AND WELDING SHALL BE DONE IN ACCORDANCE WITH AWS D1.4.
3. ALL WELDING SHALL BE CONTINUOUSLY INSPECTED BY A CERTIFIED SPECIAL INSPECTOR OR AISC APPROVED FABRICATION SHOP.

REBAR WELDING DETAIL 3/S4.1
NO SCALE

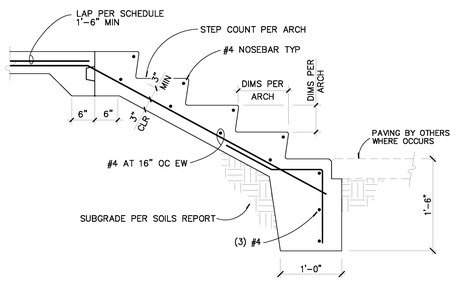


STAIR ON GRADE 10/S4.1
NO SCALE

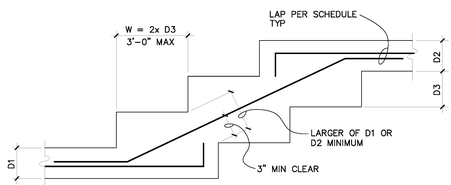


STEPPED FOOTING DETAIL 6/S4.1
NO SCALE

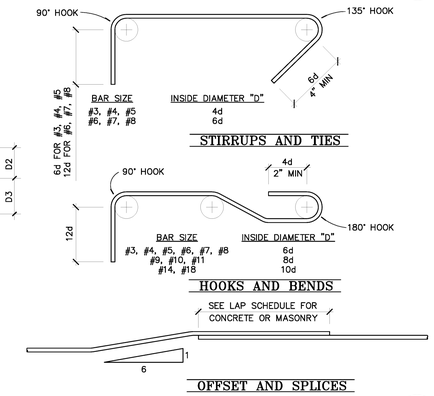


REBAR BENDING DETAIL 2/S4.1
NO SCALE

| BAR SIZE | CONCRETE STRENGTH F'c = PSI | | | | |
|---|---|---|---|---|---|
| | 3000 | 4000 | 5000 | 6000 | |
| #3 | 28<br>21 | 24<br>18 | 22<br>17 | 20<br>15 | TOP BARS ②<br>OTHER BARS |
| #4 | 37<br>28 | 32<br>25 | 29<br>22 | 26<br>20 | |
| #5 | 46<br>36 | 40<br>31 | 36<br>28 | 33<br>25 | |
| #6 | 56<br>43 | 48<br>37 | 43<br>33 | 39<br>30 | |
| #7 | 81<br>62 | 70<br>54 | 63<br>48 | 57<br>44 | |
| #8 | 93<br>71 | 80<br>62 | 72<br>55 | 65<br>50 | |
| #9 | 104<br>80 | 90<br>70 | 81<br>62 | 74<br>57 | |
| #10 | 118<br>90 | 102<br>78 | 91<br>70 | 83<br>64 | |
| #11 | 131<br>100 | 113<br>87 | 101<br>78 | 92<br>71 | |

NOTES

① INCREASE LAP LENGTHS 30% FOR LIGHT WEIGHT CONCRETE (115 PCF MAX) AND 33% AT (4) BAR BUNDLES.

② TOP BARS ARE HORIZ BARS WITH MORE THAN 12" OF WET CONCRETE PLACED BELOW.

③ MINIMUM CLEAR COVER > dB AND MINIMUM CLEAR SPACING > 2dB. INCREASE LAP LENGTHS 43% IF MINIMUMS NOT SATISFIED ("dB" = BAR DIAMETER).

④ LAP LENGTHS INDICATED ARE IN INCHES.

REBAR LAP SCHEDULE 1/S4.1
NO SCALE (FOR NORMAL WEIGHT CONCRETE)

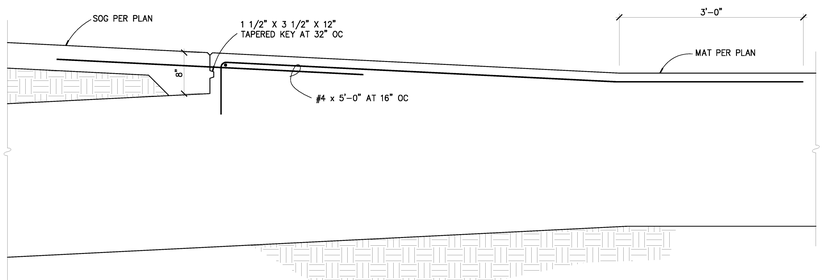


SECTION 13/S4.1
NO SCALE

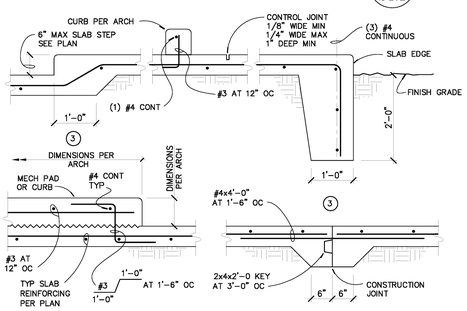


NOTES

1. PREPARE SUBGRADE PER SOILS REPORT.
2. SEE PLAN FOR SLAB REINFORCING.
3. MAY REDUCE DIMENSION TO 6" IF WALL ABOVE DOES NOT OCCUR.
4. GENERAL CONTRACTOR SHALL PROVIDE CONTROL & CONSTRUCTION JOINT LAYOUT PLAN FOR ENGINEER'S REVIEW PRIOR TO CONCRETE PLACEMENT.

SLAB ON GRADE DETAILS 9/S4.1
NO SCALE

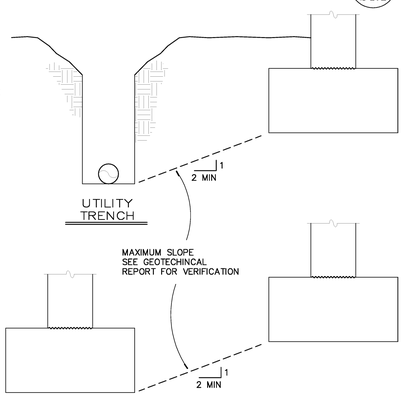


ADJACENT FOOTING/TRENCH DETAIL 5/S4.1
NO SCALE


County of San Diego
Cedar & Kettner
Development Project
San Diego, California

McCARTHY
2040 S.W. BIRCH STREET SUITE 300
Newport Beach, California 92660

Architect
IPD
Alameda
Irvine
Los Angeles
Architecture / Engineering / Consulting
www.ipd-global.com
2 Faraday, Suite 101, Irvine CA 92618
Phone 949 595 8004 Fax 949 595 8011

JW JESSEN-WRIGHT Structural Engineers
100 AMBER GROVE DRIVE, SUITE 109
CHICO, CALIFORNIA 95973
(530) 894-5345 FAX (530) 894-3016


| Revision | Date |
|---|---|
| 100% DESIGN DEVELOPMENT | 10/23/13 |
| 90% CDs - 1ST PLAN CHECK | 12/24/13 |
| ~~TRB/PC/IA/CC/ESS~~ | ~~04/02/14~~ |

| | |
|---|---|
| Date | 9/19/13 |
| JWSE Job No. | 11145 |
| Drawn By | |
| Checked By | |
| Scale | |

CONSTRUCTION DOCUMENTS

Drawing Title
TYPICAL CONCRETE DETAILS

Drawing No.
S4.1

IPD, Inc.

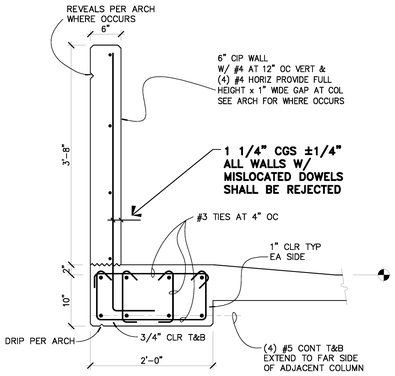


SECTION 20 / S4.2
NO SCALE

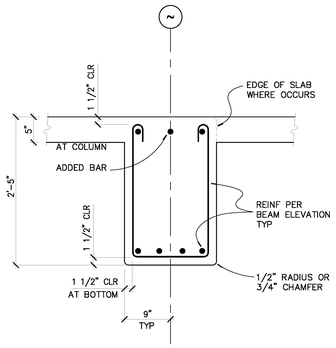


SECTION 16 / S4.2
NO SCALE

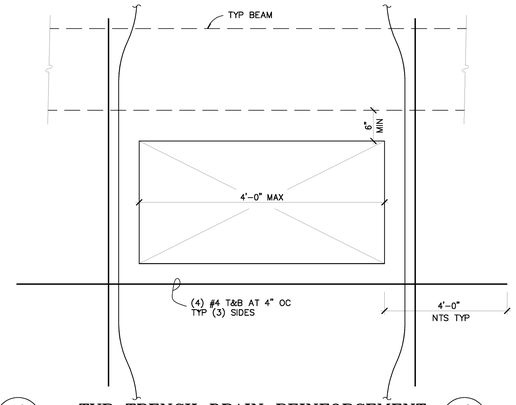


TYP TRENCH DRAIN REINFORCEMENT 12 / S4.2
NO SCALE

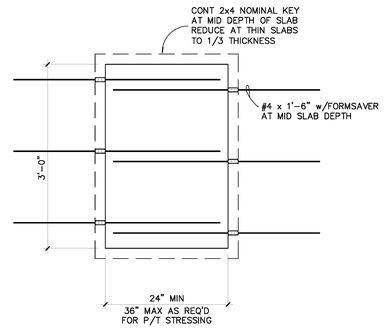


TEMPORARY SLAB BLOCKOUT 8 / S4.2
NO SCALE

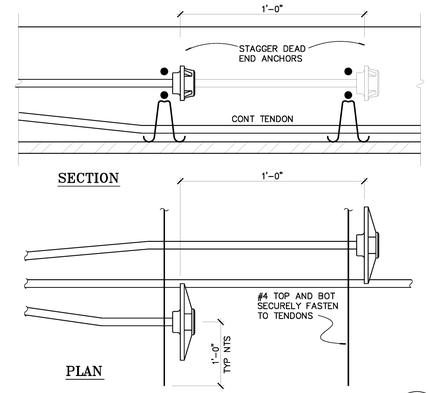


DEAD END ANCHORS AT ADDED TENDONS 4 / S4.2
NO SCALE

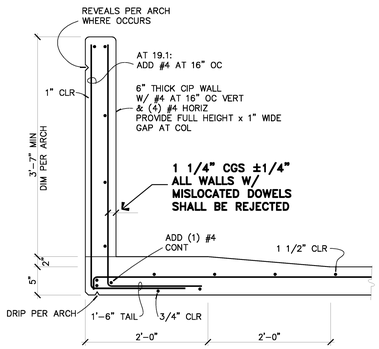


SECTION 19 / S4.2 19.1 / S4.2
NO SCALE

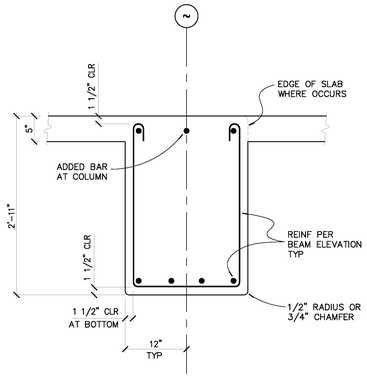


SECTION 15 / S4.2
NO SCALE

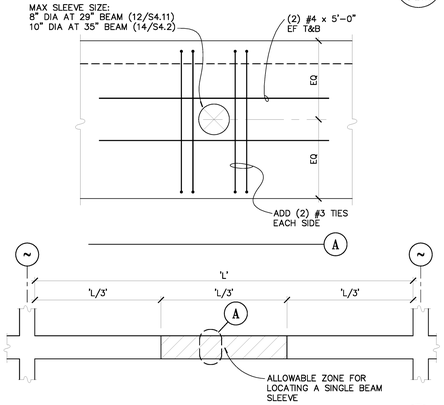


TYPICAL BEAM PENETRATION 11 / S4.2
NO SCALE

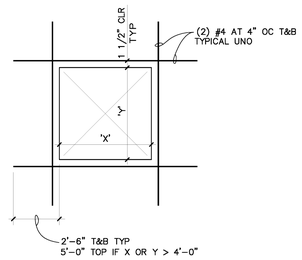


NOTES

1. REINFORCING IS NOT REQUIRED IF X AND Y ARE LESS THAN 1'-6' UNO.
2. THE MINIMUM CLEAR DISTANCE BETWEEN ADJACENT OPENINGS SHALL NOT BE LESS THAN DOUBLE THE MAXIMUM OPENING DIMENSION.
3. THE OPENING SHALL NOT BE WITHIN 3'-6" MINIMUM OF ANY COLUMN OR SLAB EDGE UNO.

REINFORCED SLAB OPENING 7 / S4.2
NO SCALE

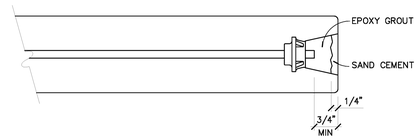


NOTES:

1. PROVIDE ENCAPSULATING ACCESSORIES, TYP AT ALL ANCHORAGE
2. PROTECTION SEQUENCE:
   - A) VERIFY TENDON ELONGATIONS
   - B) TRIM EXCESS TENDON LENGTH
   - C) FIRMLY PACK POCKET WITH NON-SHRINK EPOXY GROUT
   - D) DRY PACK EXTERIOR 1/4" WITH SAND-CEMENT MIX TO MATCH ADJACENT CONC
   - E) WORK SHALL BE COMPLETED WITHIN (10) DAYS OF P/T STRESSING

STRESSING END ANCHOR PROTECTION 3 / S4.2
NO SCALE

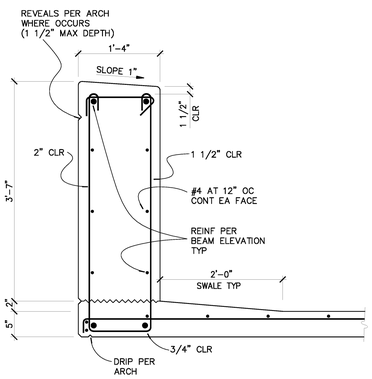


SECTION 18 / S4.2
NO SCALE

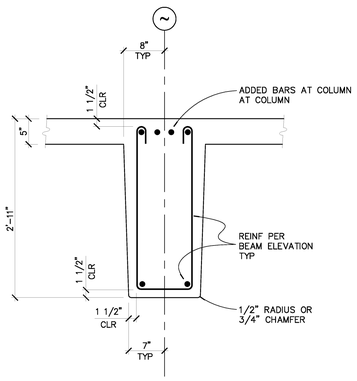


SECTION 14 / S4.2
NO SCALE

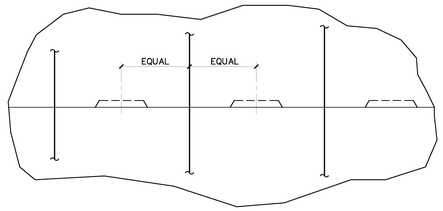


PLAN-SECTION A

NOTE:
AT CONTRACTOR'S OPTION: PROVIDE ROUGHENED SLAB EDGE IN LIEU OF KEYS, TYP ROUGHEN TO ±1/4" AMPLITUDE.

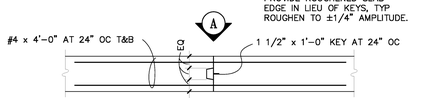


ADDED REINF AT CONST JOINT 10 / S4.2
NO SCALE

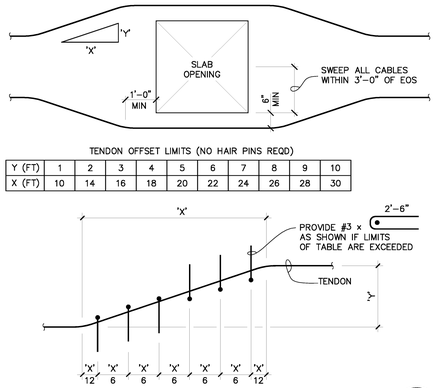


| Y (FT) | 1 | 2 | 3 | 4 | 5 | 6 | 7 | 8 | 9 | 10 |
|---|---|---|---|---|---|---|---|---|---|---|
| X (FT) | 10 | 14 | 16 | 18 | 20 | 22 | 24 | 26 | 28 | 30 |

TENDON OFFSET LIMITS 6 / S4.2
NO SCALE

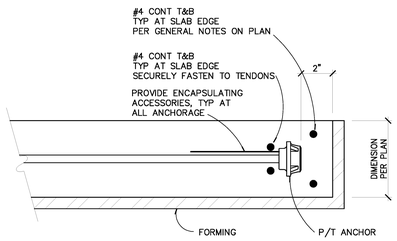


DEAD END ANCHOR 2 / S4.2
NO SCALE

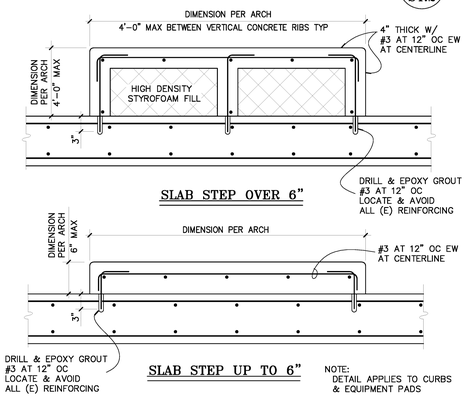


NOTE:
DETAIL APPLIES TO CURBS & EQUIPMENT PADS

RAISED SLAB OVER ELEVATED SLAB 17 / S4.2
NO SCALE

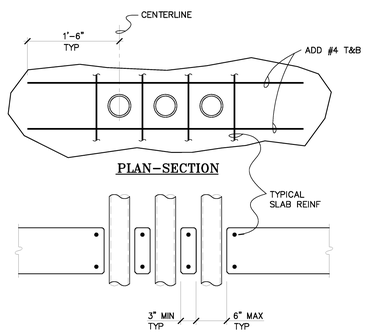


TYPICAL PIPE/CONDUIT/SLEEVE GROUP THRU SLAB 13 / S4.2
NO SCALE

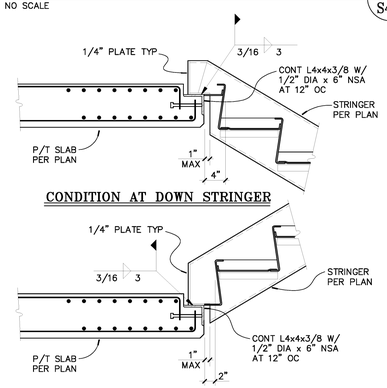


TYPICAL STAIR CONNECTION 9 / S4.2
NO SCALE

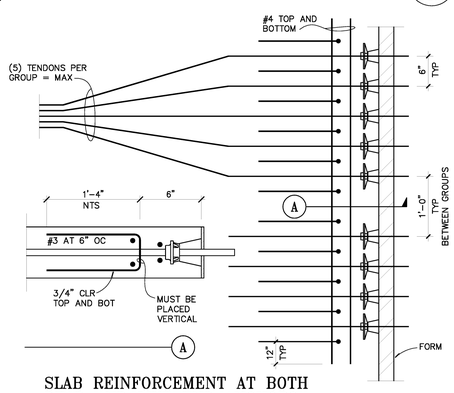


SLAB REINFORCEMENT AT BOTH DEAD AND LIVE END ANCHORS AT GROUPS OF 3 OR MORE ANCHORS 5 / S4.2
NO SCALE

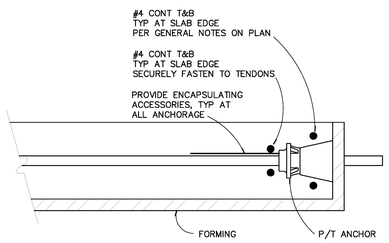


STRESSING END ANCHOR 1 / S4.2
NO SCALE

**County of San Diego Cedar & Kettner Development Project**
San Diego, California

McCARTHY
2040L S.W. BIRCH STREET SUITE 300
Newport Beach, California 92660

Architect
Alameda
Irvine
Los Angeles
IPD
Architecture / Engineering / Consulting
www.ipd-global.com
2 Faraday, Suite 101, Irvine CA 92618
Phone 949 595 8004 Fax 949 595 8011

JW JESSEN-WRIGHT Structural Engineers
100 AMBER GROVE DRIVE, SUITE 109
CHICO, CALIFORNIA 95973
(530) 894-5345 FAX (530) 894-3016

REGISTERED PROFESSIONAL ENGINEER KENT D. JESSEN NO. 2183 EXP. 9/30/14 STRUCTURAL STATE OF CALIFORNIA

| Revision | Date |
|---|---|
| 100% DESIGN DEVELOPMENT | 10/23/13 |
| 90% CDs - 1ST PLAN CHECK | 12/24/13 |
| 2ND PLAN CHECK | 04/23/14 |

| | |
|---|---|
| Date | 9/19/13 |
| JWSE Job No. | 11145 |
| Drawn By | |
| Checked By | |
| Scale | |

CONSTRUCTION DOCUMENTS

Drawing Title
TYPICAL CONCRETE DETAILS

Drawing No.
**S4.2**

IPD, Inc.

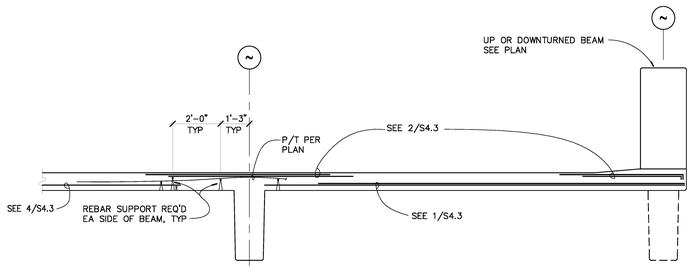


## TYPICAL END BAY
NO SCALE
16 / S4.3

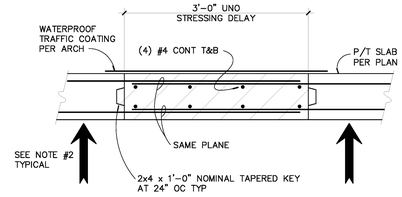


NOTES:

1. BOTH SLAB EDGES SHALL REMAIN CONTINUOUSLY SHORED UNTIL DELAY STRIP CONCRETE STRENGTH REACHES 4000 PSI. VERIFY PROPER SLAB ALIGNMENT AND ELEVATIONS PRIOR TO POURING DELAY STRIP.

## TYPICAL DELAY STRIP
NO SCALE
12 / S4.3

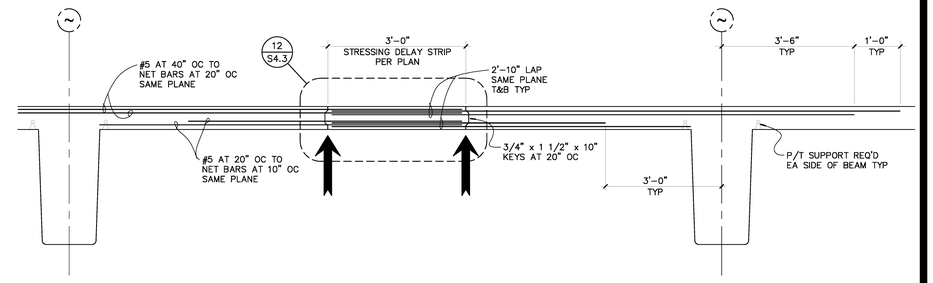


## SECTION AT SLAB W/ DELAY STRIP
NO SCALE
4 / S4.3

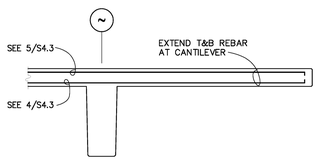


## SECTION AT CANTILEVER SLAB
NO SCALE
19 / S4.3

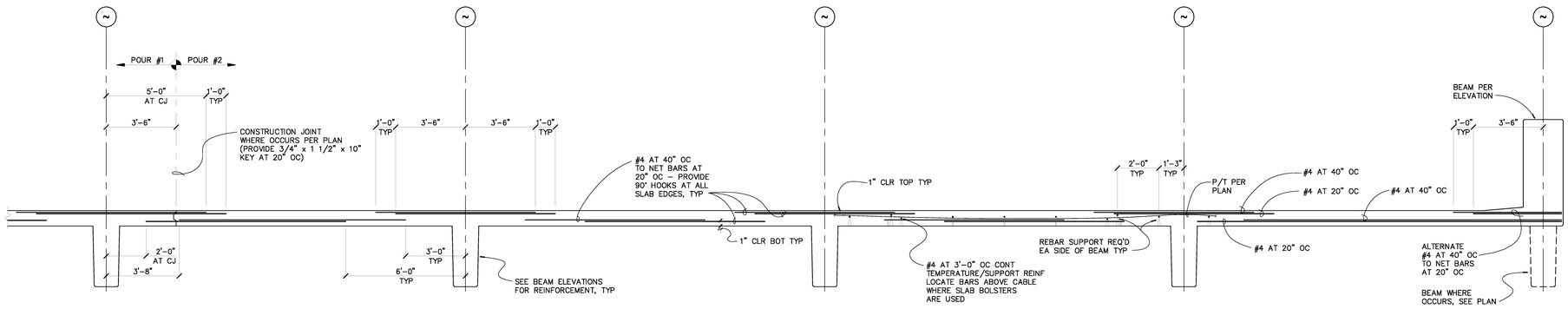


## SECTION AT SLAB
NO SCALE
3 / S4.3

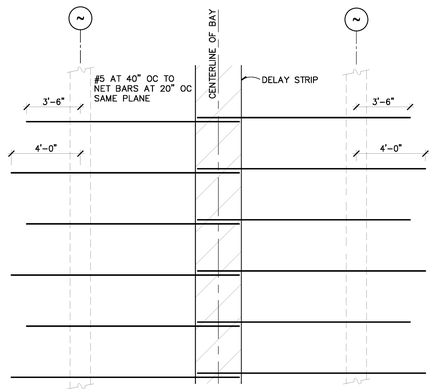


## TYP TOP SLAB REINF AT DELAY STRIP
NO SCALE
14 / S4.3

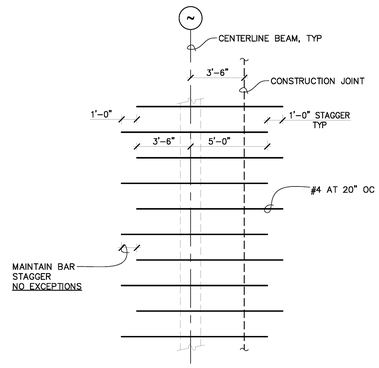


## TYP TOP SLAB REINF AT CONSTR JTS
NO SCALE
10 / S4.3

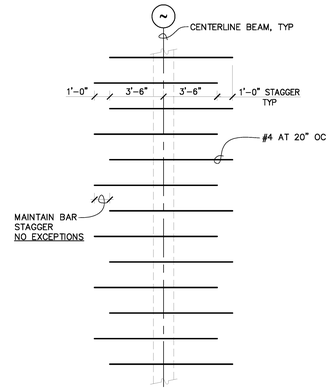


## TYP TOP SLAB REINF
NO SCALE
5 / S4.3

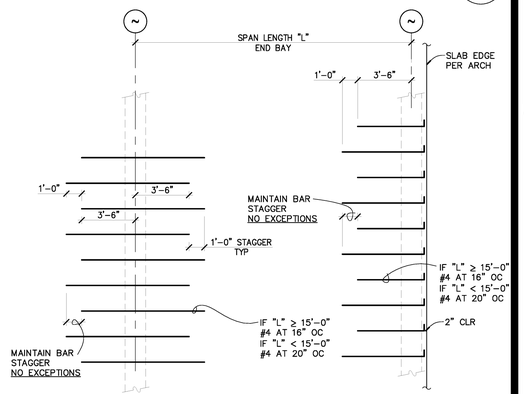


## TYP TOP SLAB REINF AT END BAY
NO SCALE
2 / S4.3

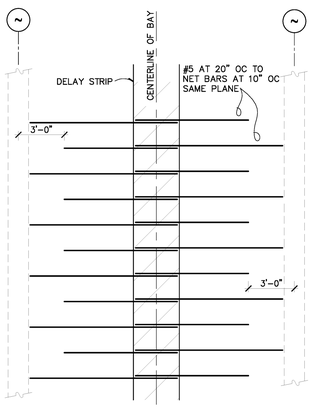


## TYP BOT SLAB REINF AT DELAY STRIP
NO SCALE
13 / S4.3

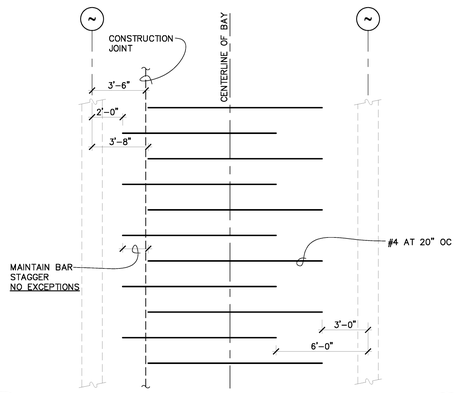


## TYP BOT SLAB REINF AT CONSTR JTS
NO SCALE
9 / S4.3

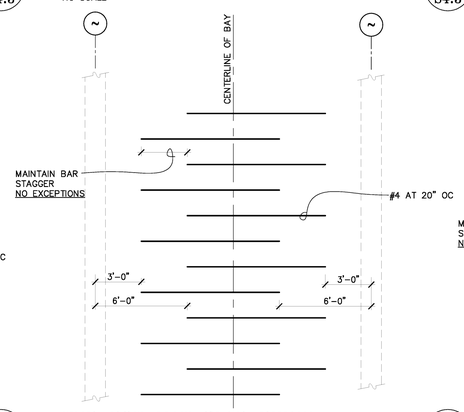


## TYP BOT MAT SLAB REINF
NO SCALE
4 / S4.3

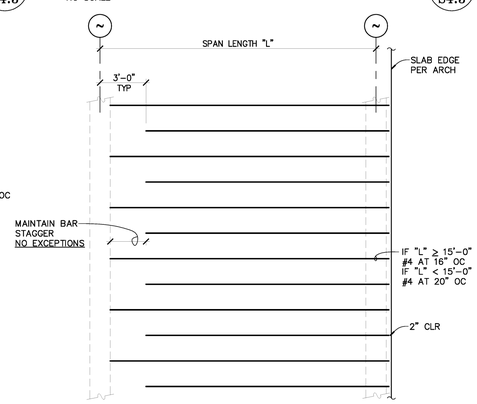


## TYP BOT SLAB REINF AT END BAY
NO SCALE
1 / S4.3

**County of San Diego**
**Cedar & Kettner**
**Development Project**
San Diego, California

McCARTHY


20401 S.W. BIRCH STREET SUITE 300
Newport Beach, California 92660

Architect
IPD
Alameda
Irvine
Los Angeles
Architecture / Engineering / Consulting
www.ipd-global.com
2 Faraday, Suite 101, Irvine CA 92618
Phone 949 595 8004 Fax 949 595 8011

JW JESSEN-WRIGHT
Structural Engineers
100 AMBER GROVE DRIVE, SUITE 109
CHICO, CALIFORNIA 95973
(530) 894-5345 FAX (530) 894-3016


REGISTERED PROFESSIONAL ENGINEER
KENT D. JESSEN
NO. 2283
EXP. 9/30/14
STRUCTURAL
STATE OF CALIFORNIA

| Revision | Date |
|---|---|
| 100% DESIGN DEVELOPMENT | 10/23/13 |
| 90% CDs - 1ST PLAN CHECK | 12/24/13 |
| 2ND PLAN CHECK | 04/23/14 |

| | |
|---|---|
| Date | 9/19/13 |
| JWSE Job No. | 11145 |
| Drawn By | |
| Checked By | |
| Scale | |

CONSTRUCTION DOCUMENTS

Drawing Title

TYPICAL
SLAB REINFORCING
& DETAILS

Drawing No.

**S4.3**

IPD, Inc.

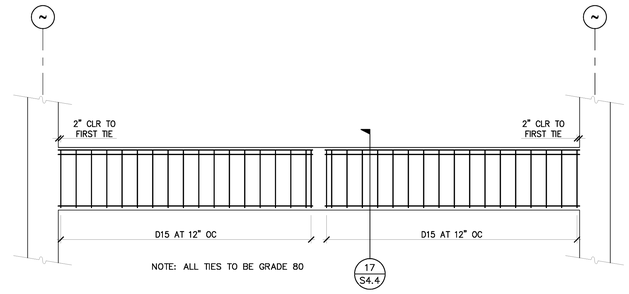


SWWR ALTERNATE
TYP GIRDER TIE REINF
NO SCALE
4 S4.4

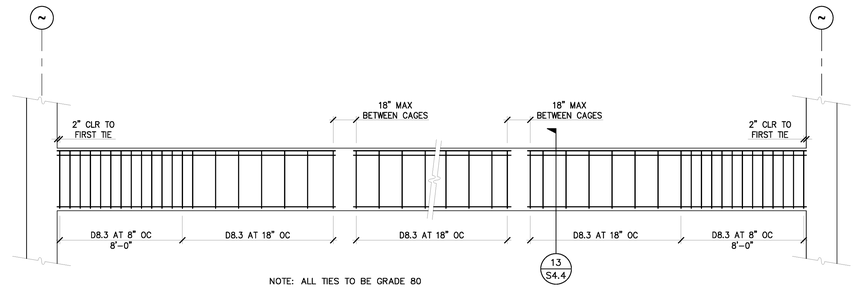


SWWR ALTERNATE
TYP P/T BEAM TIE REINF
NO SCALE
3 S4.4

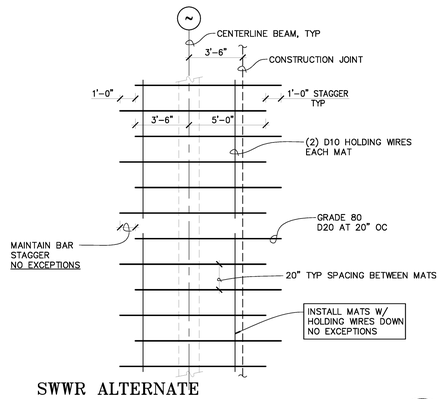


SWWR ALTERNATE
TYP TOP SLAB REINF AT CONSTR JTS
NO SCALE
10 S4.4

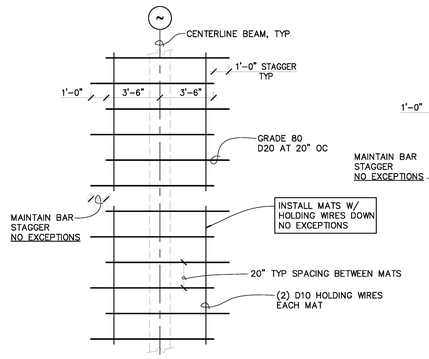


SWWR ALTERNATE
TYP TOP SLAB REINF
NO SCALE
6 S4.4

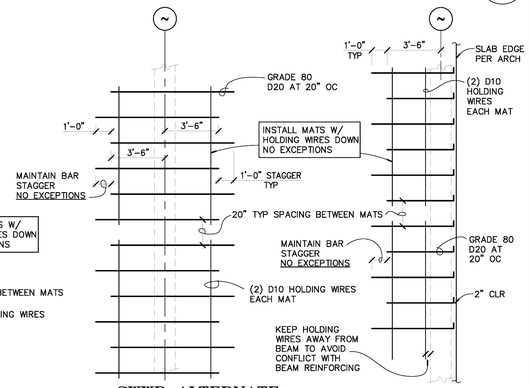


SWWR ALTERNATE
TYP TOP SLAB REINF AT EOS
NO SCALE
2 S4.4

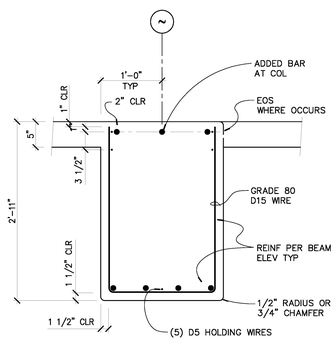


SWWR ALTERNATE
TYP GIRDER SECTION
NO SCALE
17 S4.4

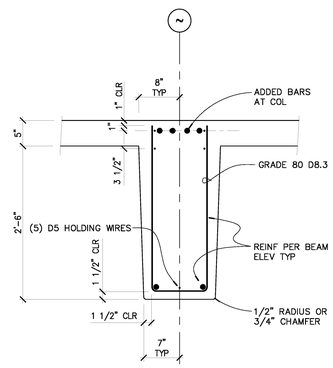


SWWR ALTERNATE
TYP P/T BEAM SECTION
NO SCALE
13 S4.4

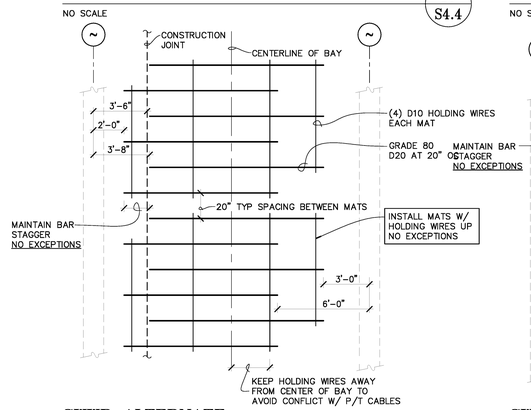


SWWR ALTERNATE
TYP BOT SLAB REINF AT CONSTR JTS
NO SCALE
9 S4.4

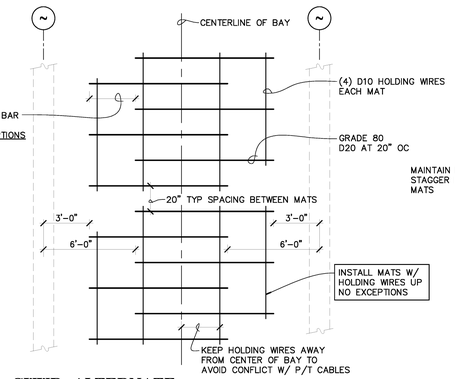


SWWR ALTERNATE
TYP BOT MAT SLAB REINF
NO SCALE
5 S4.4

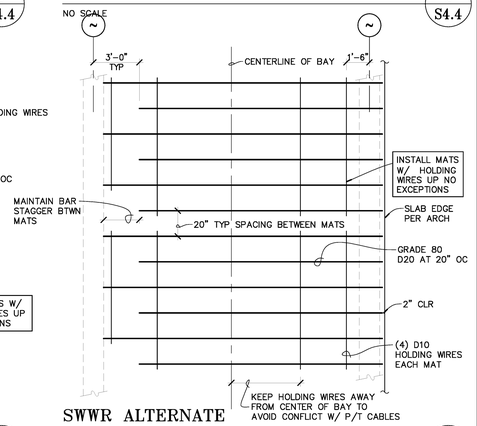


SWWR ALTERNATE
TYP BOT SLAB REINF AT END BAY
NO SCALE
1 S4.4

County of San Diego
Cedar & Kettner
Development Project
San Diego, California

McCARTHY
2040L S.W. BIRCH STREET SUITE 300
Newport Beach, California 92660

Architect
IPD
Alameda
Irvine
Los Angeles
Architecture / Engineering / Consulting
www.ipd-global.com
2 Faraday, Suite 101, Irvine CA 92618
Phone 949 595 8004 Fax 949 595 8011

JW JESSEN-WRIGHT
Structural Engineers
100 AMBER GROVE DRIVE, SUITE 109
CHICO, CALIFORNIA 95973
(530) 894-5345 FAX (530) 894-3016

REGISTERED PROFESSIONAL ENGINEER
K. JESSEN
STATE OF CALIFORNIA

| Revision | Date |
|---|---|
| 100% DESIGN DEVELOPMENT | 10/23/13 |
| 90% CDs - 1ST PLAN CHECK | 12/24/13 |
| 2ND PLAN CHECK | 04/23/14 |

| | |
|---|---|
| Date | 9/19/13 |
| JWSE Job No. | 11145 |
| Drawn By | |
| Checked By | |
| Scale | |

CONSTRUCTION DOCUMENTS

Drawing Title
ALTERNATE
SLAB REINFORCING
& TIES

Drawing No.
S4.4

IPD, Inc.

| BAR SIZE | CMU STRENGTH F'm | |
|---|---|---|
| | 1500 PSI | 2000 PSI |
| #3 | 18" | 18" |
| #4 | 25" | 24" |
| #5 | 39" | 34" |
| #6 | 54" | 54" |
| #7 | 63" | 63" |
| #8 | 72" | 72" |
| #9 | 81" | 81" |

NOTES:
1. MINIMUM CLEAR COVER = 2"
2. NON-CONTACT LAP SPLICES (UP TO 20% OF LAP LENGTH (6" MAX)) ARE ACCEPTABLE
3. INCREASE LENGTHS BY 50% FOR EPOXY COATED BARS

REBAR LAP SCHEDULE (CMU) 16 S4.5
NO SCALE

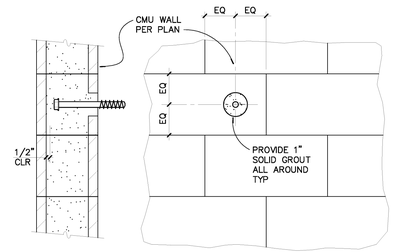


TYPICAL ANCHOR BOLT IN CMU 12 S4.5
NO SCALE

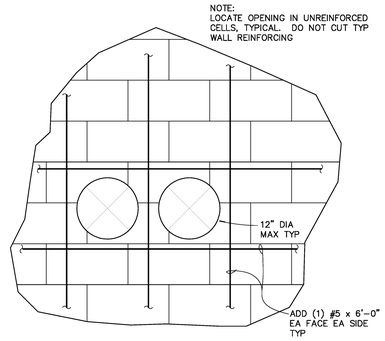


TYPICAL SLEEVE IN CMU WALL 8 S4.5
NO SCALE

NOTES:
1. SEE WALL ELEVATIONS FOR REINFORCING SIZE & SPACING TYP UNO.
2. ALL TRIM REINFORCING TO MATCH SIZE OF WALL REINFORCING. LAP ALL SPLICES (50) BAR DIA MIN.
3. AT CONTRACTOR'S OPTION, 24" x 24" CORNER BARS MAY BE USED IN LIEU OF 16" HORIZ HOOKED BARS.

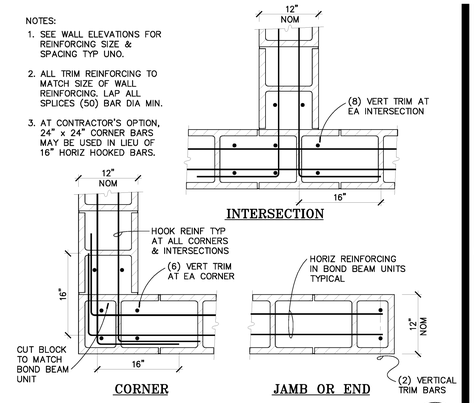


TYPICAL CMU WALL REINFORCING 4 S4.5
NO SCALE

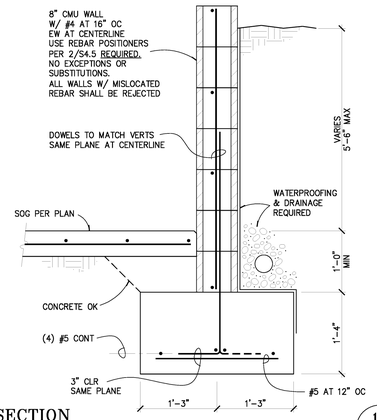


SECTION 19 S4.5
NO SCALE

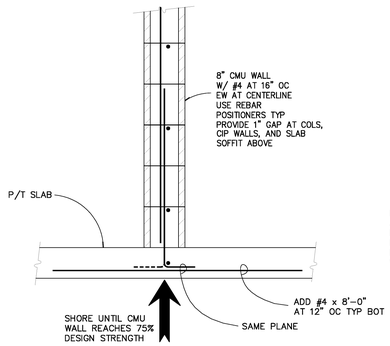


SECTION 15 S4.5
NO SCALE

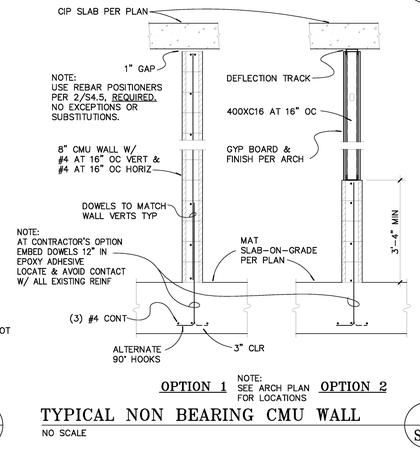


TYPICAL NON BEARING CMU WALL 11 S4.5
NO SCALE

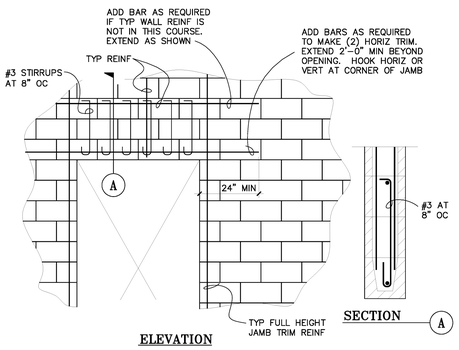


TYP 8" MASONRY LINTEL REINFORCING 7 S4.5
NO SCALE

NOTES:
1. SEE WALL ELEVATIONS FOR REINFORCING SIZE & SPACING TYP UNO.
2. ALL TRIM REINFORCING TO MATCH SIZE OF WALL REINFORCING. LAP ALL SPLICES (50) BAR DIA MIN.
3. AT CONTRACTOR'S OPTION, 24" x 24" CORNER BARS MAY BE USED IN LIEU OF 16" HORIZ HOOKED BARS.

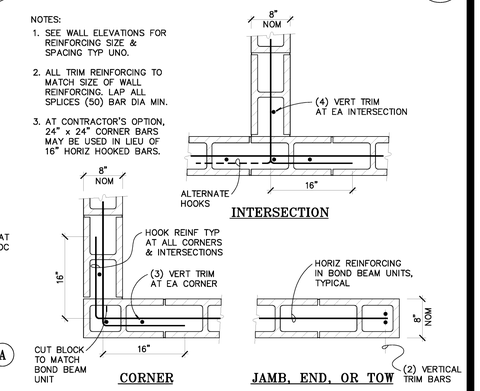


TYPICAL CMU WALL REINFORCING 3 S4.5
NO SCALE

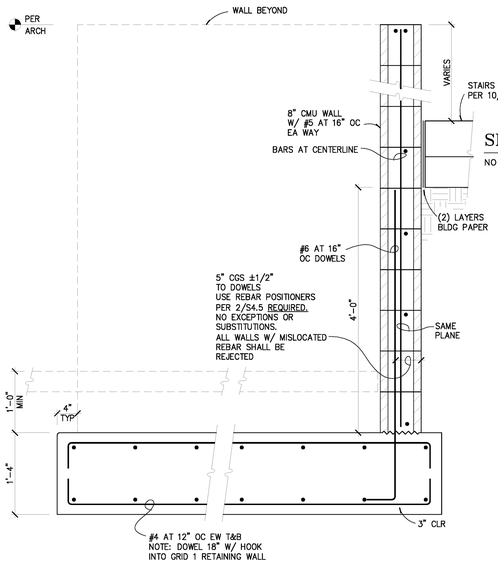


SECTION 17 S4.5
NO SCALE

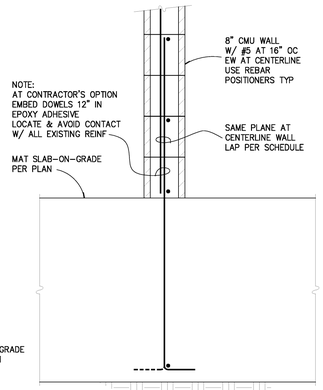


SECTION 14 S4.5
NO SCALE

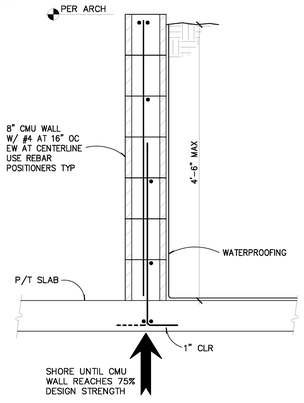


SECTION 13 S4.5
NO SCALE

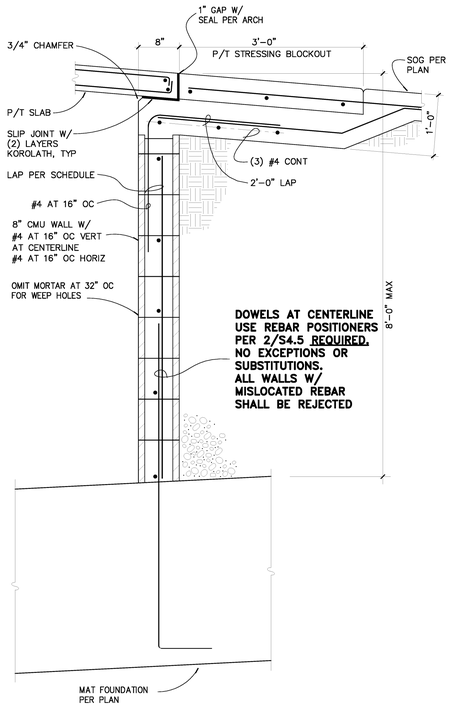


SECTION 9 S4.5
NO SCALE

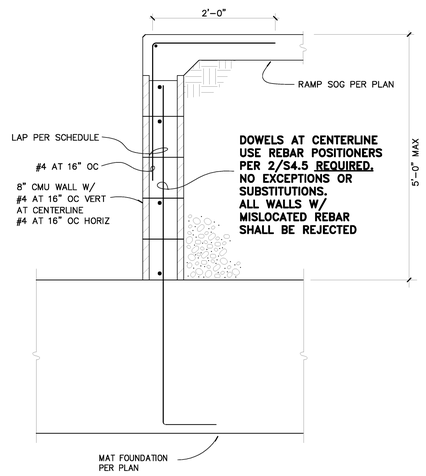


SECTION 5 S4.5
NO SCALE

NOTES:
1. MAXIMUM VERTICAL SPACING OF POSITIONERS SHALL NOT EXCEED 72".
2. POSITIONERS SHALL BE LOCATED 24" MAX FROM TOP OF FOOTING.
3. SUPPLIER – WCR FABRICATORS TEL. (949) 492-2370
4. USE AT ALL CMU WALLS NO EXCEPTIONS.

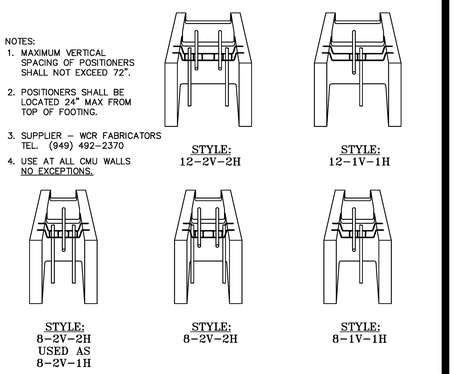


CRADLE POSITIONERS FOR REBAR IN CMU WALLS 2 S4.5
NO SCALE

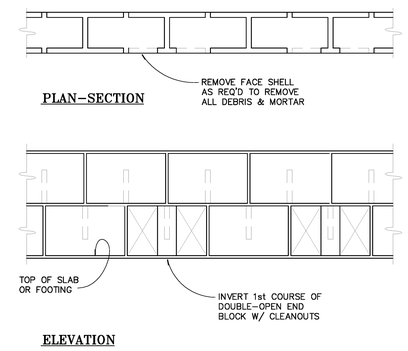


CMU CLEANOUT DETAIL 1 S4.5
NO SCALE

County of San Diego
Cedar & Kettner
Development Project
San Diego, California

McCARTHY
2040L S.W. BIRCH STREET SUITE 300
Newport Beach, California 92660

Architect
Alameda
Irvine
Los Angeles
IPD
Architecture / Engineering / Consulting
www.ipd-global.com
2 Faraday, Suite 101, Irvine CA 92618
Phone 949 595 8004 Fax 949 595 8011

JW JESSEN-WRIGHT Structural Engineers
100 AMBER GROVE DRIVE, SUITE 109
CHICO, CALIFORNIA 95973
(530) 894-5345 FAX (530) 894-3016

REGISTERED PROFESSIONAL ENGINEER KENT D. JESSEN No. 3373 STRUCTURAL CALIFORNIA

| Revision | Date |
|---|---|
| 100% DESIGN DEVELOPMENT | 10/23/13 |
| 90% CDs - 1ST PLAN CHECK | 12/24/13 |
| 2ND PLAN CHECK | 04/23/14 |

| | |
|---|---|
| Date | 9/19/13 |
| JWSE Job No. | 11145 |
| Drawn By | |
| Checked By | |
| Scale | |

CONSTRUCTION DOCUMENTS

Drawing Title
TYPICAL MASONRY DETAILS

Drawing No.
S4.5

IPD, Inc.

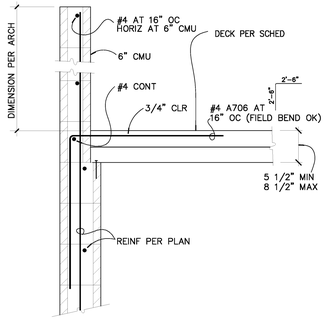


SECTION 20/S4.6
NO SCALE

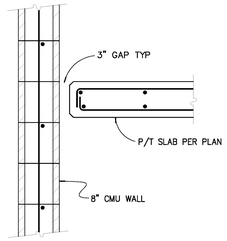


SECTION 16/S4.6
NO SCALE

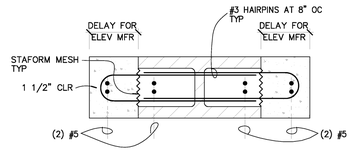


SECTION 12/S4.6
NO SCALE

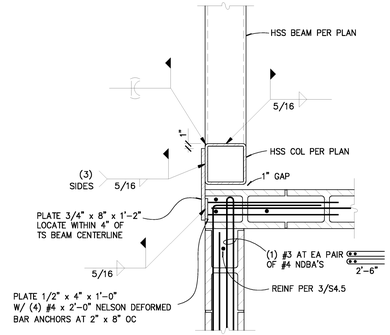


PLAN-SECTION 8/S4.6
NO SCALE

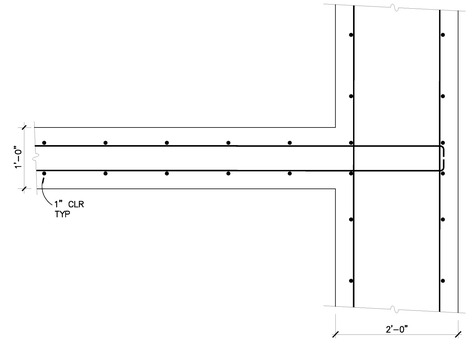


PLAN-SECTION 4/S4.6
NO SCALE

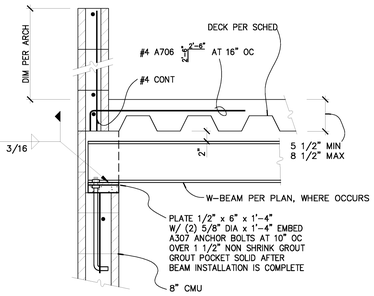


SECTION 19/S4.6
NO SCALE

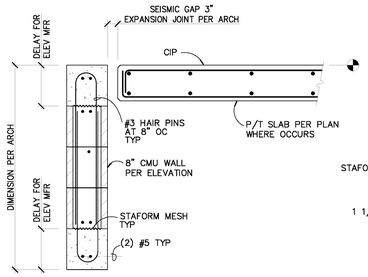


SECTION 15/S4.6
NO SCALE

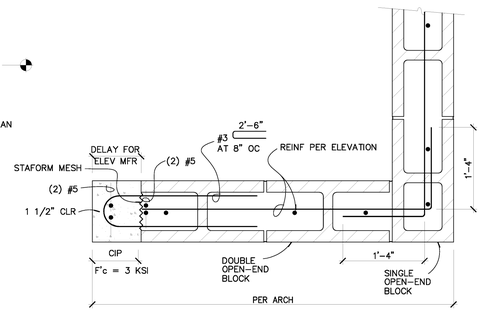


PLAN-SECTION 11/S4.6
NO SCALE

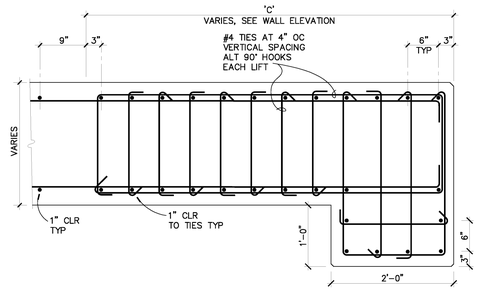


PLAN-SECTION 7/S4.6
NO SCALE

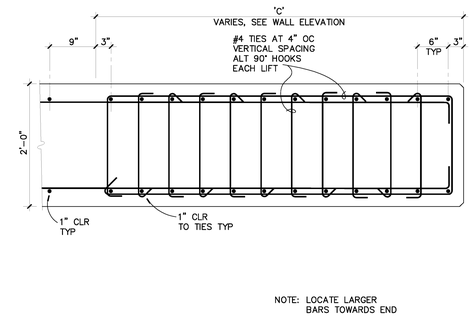


PLAN-SECTION 3/S4.6
NO SCALE

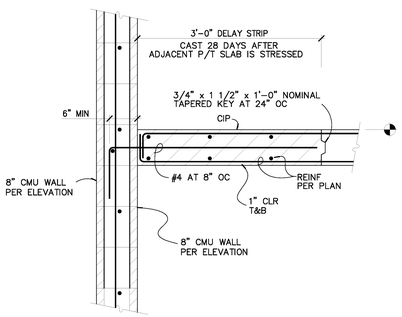


SECTION 18/S4.6
NO SCALE

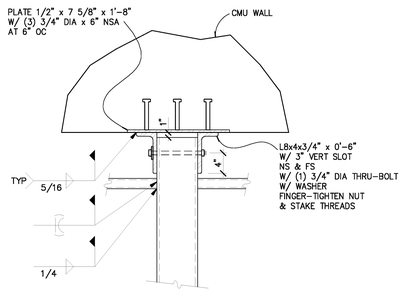


SECTION 14/S4.6
NO SCALE

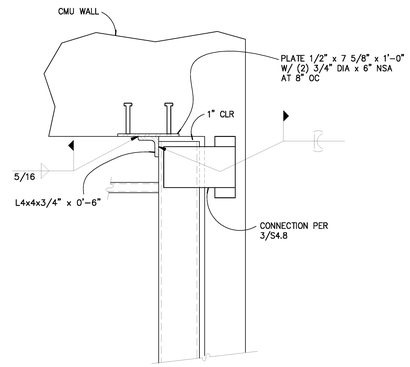


SECTION 10/S4.6
NO SCALE

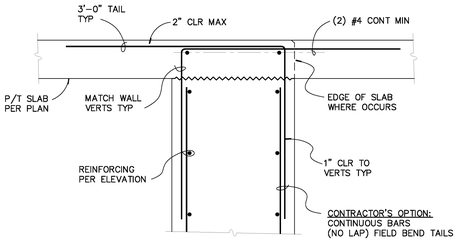


SECTION 6/S4.6
NO SCALE

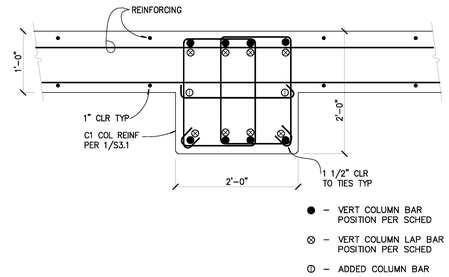


PLAN-SECTION 2/S4.6
NO SCALE

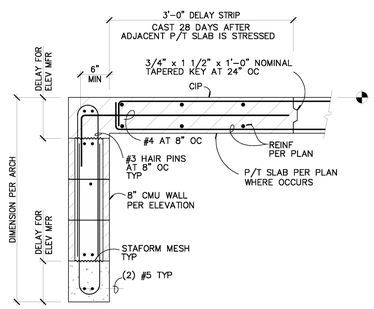


SECTION 17/S4.6
NO SCALE

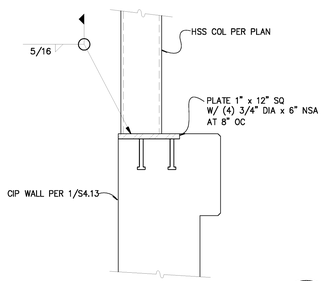


SECTION 13/S4.6
NO SCALE

A–A

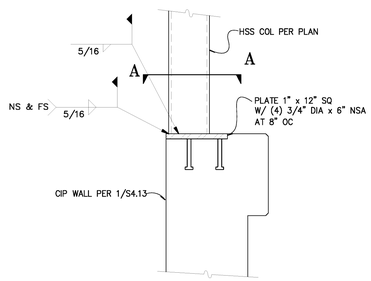


SECTION 9/S4.6
NO SCALE

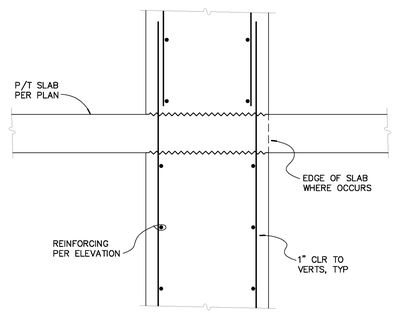


SECTION 5/S4.6
NO SCALE

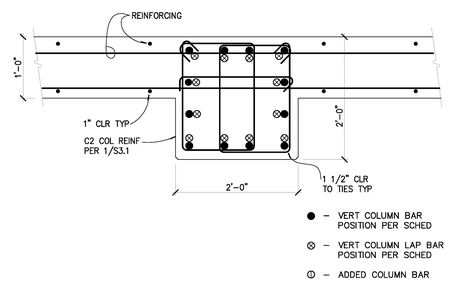


PLAN-SECTION 1/S4.6
NO SCALE

**County of San Diego**
**Cedar & Kettner**
**Development Project**
San Diego, California

McCARTHY
2040L S.W. BIRCH STREET SUITE 300
Newport Beach, California 92660

Architect
Alameda
Irvine
Los Angeles
IPD
Architecture / Engineering / Consulting
www.ipd-global.com
2 Faraday, Suite 101, Irvine CA 92618
Phone 949 595 8004 Fax 949 595 8011

JW JESSEN-WRIGHT
Structural Engineers
100 AMBER GROVE DRIVE, SUITE 109
CHICO, CALIFORNIA 95973
(530) 894-5345 FAX (530) 894-3016

REGISTERED PROFESSIONAL ENGINEER
KEVIN D. JESSEN
No. 3283
EXP. 6/30/14
STRUCTURAL
STATE OF CALIFORNIA

| Revision | Date |
|---|---|
| 100% DESIGN DEVELOPMENT | 10/23/13 |
| 90% CDs - 1ST PLAN CHECK | 12/24/13 |
| 2ND PLAN CHECK | 04/23/14 |

| | |
|---|---|
| Date | 9/19/13 |
| JWSE Job No. | 11145 |
| Drawn By | |
| Checked By | |
| Scale | |

CONSTRUCTION DOCUMENTS

Drawing Title
CONCRETE & MASONRY DETAILS

Drawing No.
**S4.6**

IPD, Inc.

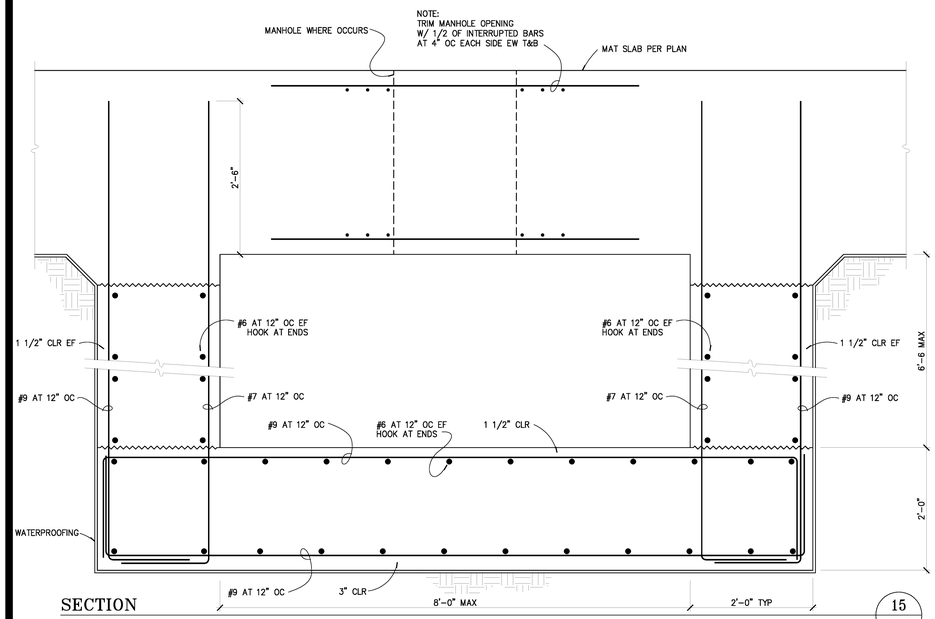


SECTION 15 / S4.7
NO SCALE

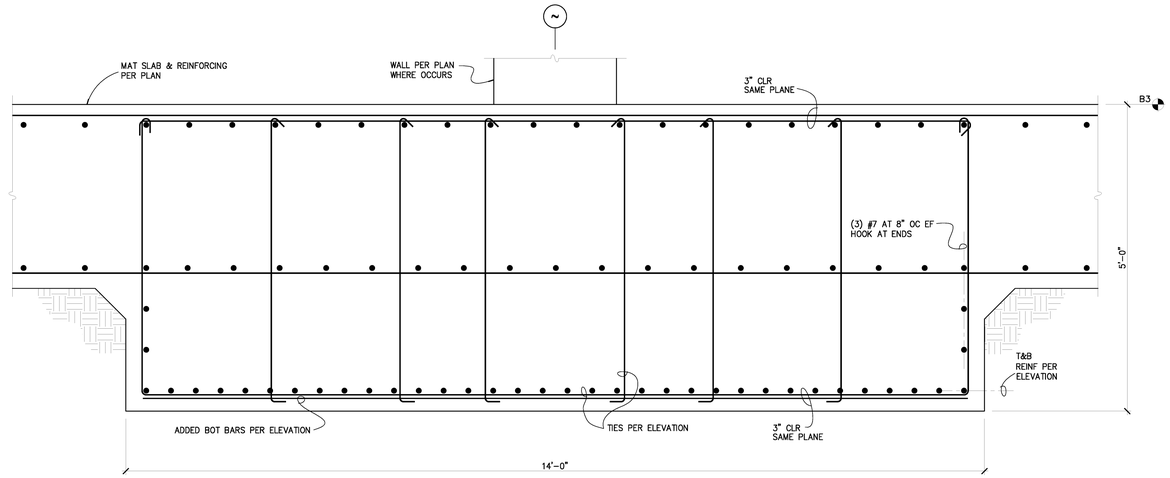


SECTION 3 / S4.7
NO SCALE

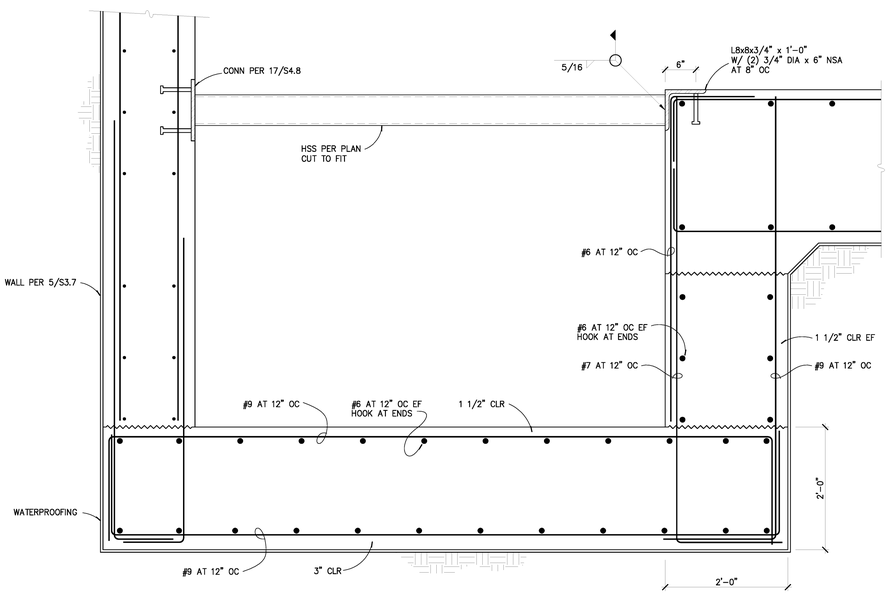


SECTION 14 / S4.7
NO SCALE

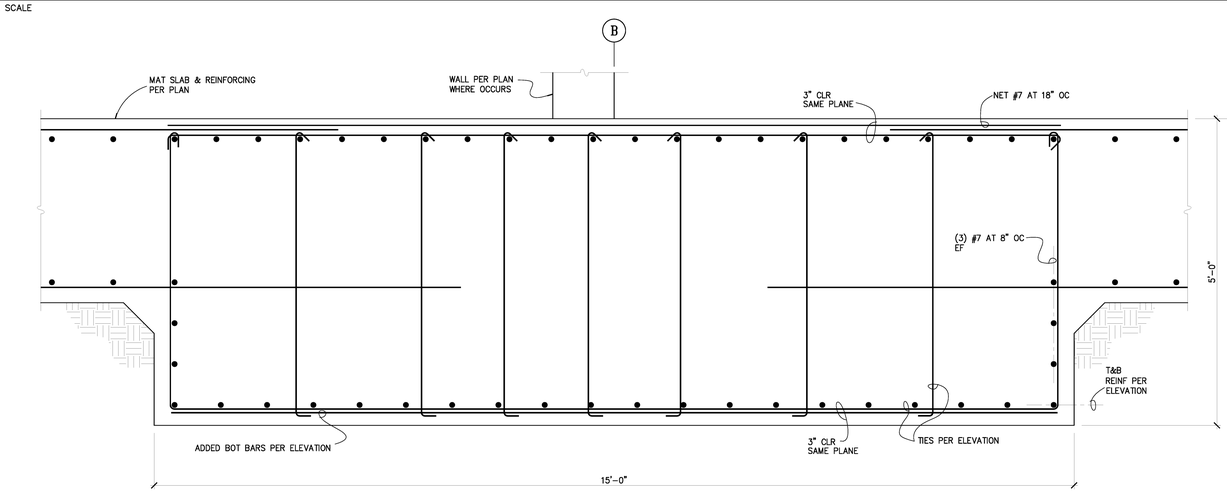


SECTION 2 / S4.7
NO SCALE

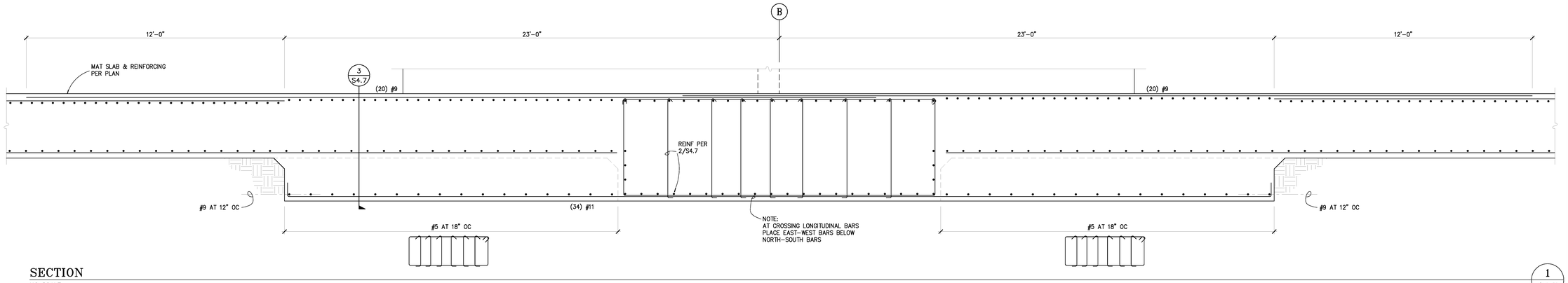


SECTION 1 / S4.7
NO SCALE

**County of San Diego**
**Cedar & Kettner**
**Development Project**
San Diego, California

McCARTHY
20401 S.W. BIRCH STREET SUITE 300
Newport Beach, California 92660

Architect
IPD
Alameda
Irvine
Los Angeles
Architecture / Engineering / Consulting
www.ipd-global.com
2 Faraday, Suite 101, Irvine CA 92618
Phone 949 595 8004 Fax 949 595 8011

JW JESSEN-WRIGHT
Structural Engineers
100 AMBER GROVE DRIVE, SUITE 109
CHICO, CALIFORNIA 95973
(530) 894-5345 FAX (530) 894-3016

REGISTERED PROFESSIONAL ENGINEER
KENT D. JESSEN
NO. 3393
EXP. 3/31/06
STATE OF CALIFORNIA

| Revision | Date |
|---|---|
| 100% DESIGN DEVELOPMENT | 10/23/13 |
| 90% CDs - 1ST PLAN CHECK | 12/24/13 |
| 2ND PLAN CHECK | 04/23/14 |

| | |
|---|---|
| Date | 9/19/13 |
| JWSE Job No. | 11145 |
| Drawn By | |
| Checked By | |
| Scale | |

CONSTRUCTION DOCUMENTS

Drawing Title
CONCRETE DETAILS

Drawing No.
**S4.7**

IPD, Inc.

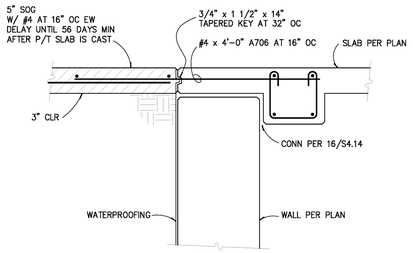


SECTION 20/S4.8
NO SCALE

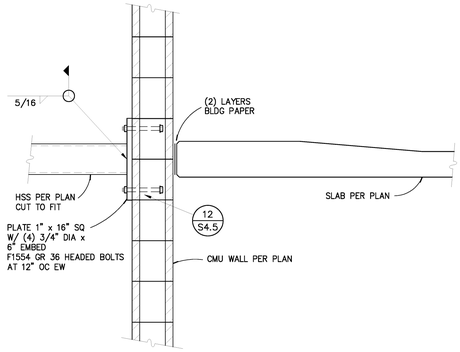


SECTION 16/S4.8
NO SCALE

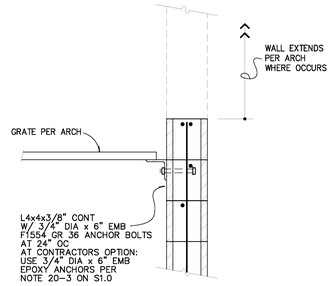


SECTION 12/S4.8
NO SCALE

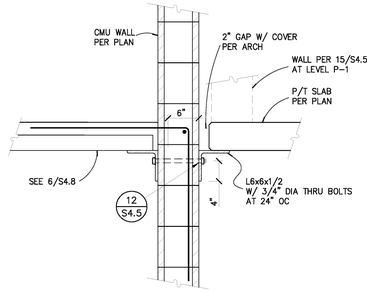


SECTION 8/S4.8
NO SCALE

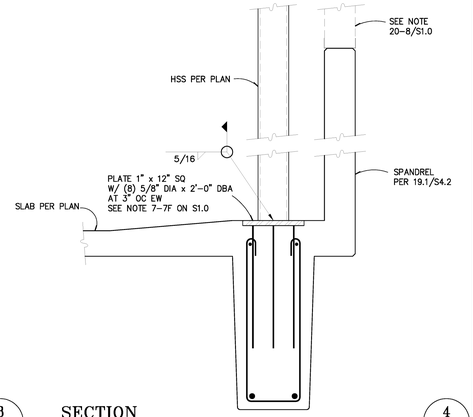


SECTION 4/S4.8
NO SCALE

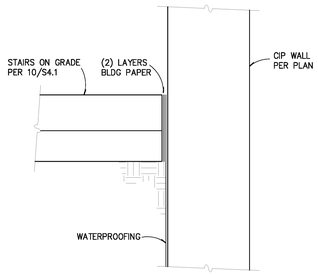


SECTION 19/S4.8
NO SCALE

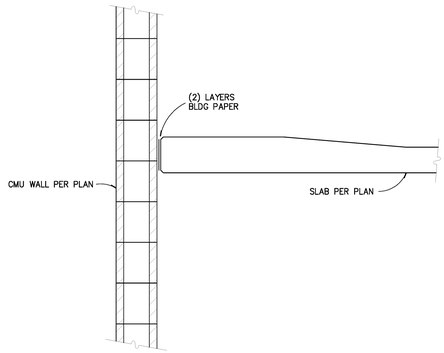


SECTION 15/S4.8
NO SCALE

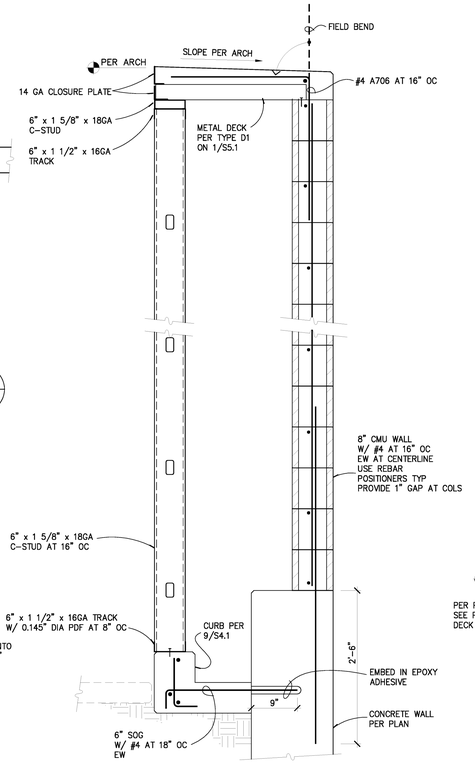


SECTION 12/S4.8
NO SCALE

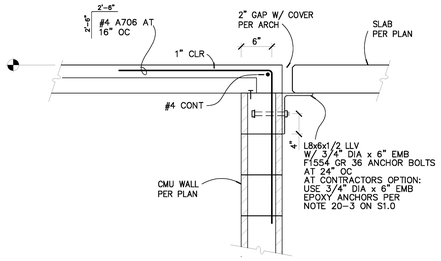


SECTION 7/S4.8
NO SCALE

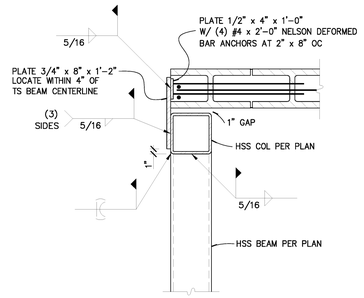


PLAN-SECTION 3/S4.8
NO SCALE

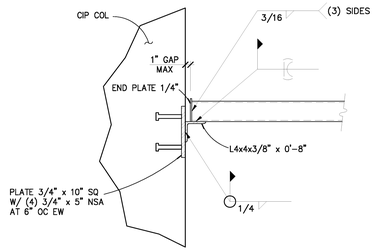


SECTION 18/S4.8
NO SCALE

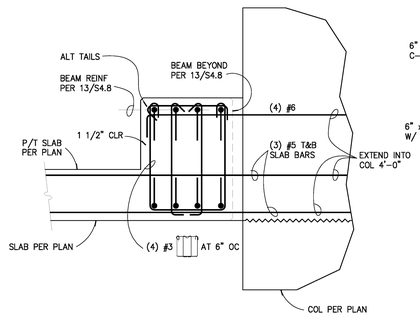


SECTION 14/S4.8
NO SCALE

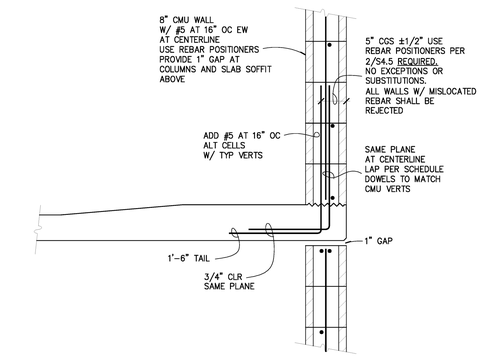


SECTION 10/S4.8
NO SCALE

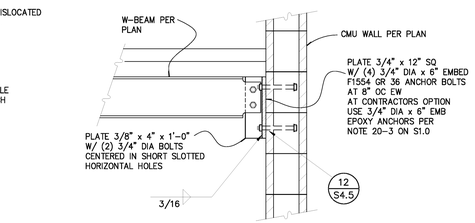


SECTION 6/S4.8
NO SCALE

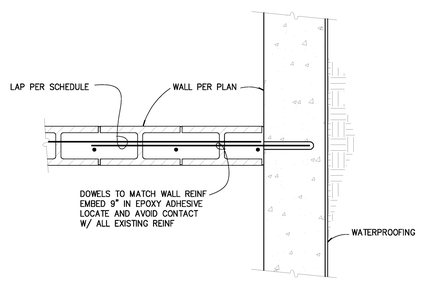


SECTION 2/S4.8
NO SCALE

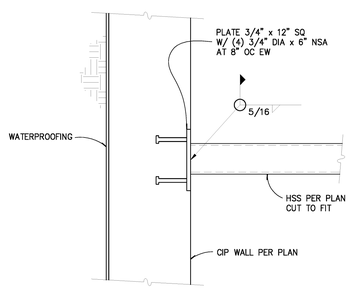


SECTION 17/S4.8
NO SCALE

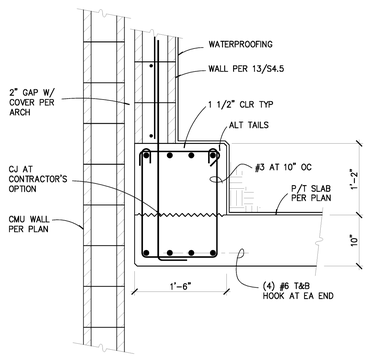


SECTION 13/S4.8
NO SCALE


County of San Diego
Cedar & Kettner
Development Project
San Diego, California

McCARTHY
2040L S.W. BIRCH STREET SUITE 300
Newport Beach, California 92660

Architect
IPD
Alameda
Irvine
Los Angeles
Architecture / Engineering / Consulting
www.ipd-global.com
2 Faraday, Suite 101, Irvine CA 92618
Phone 949 595 8004 Fax 949 595 8011

JW JESSEN-WRIGHT
Structural Engineers
100 AMBER GROVE DRIVE, SUITE 109
CHICO, CALIFORNIA 95973
(530) 894-5345 FAX (530) 894-3016


| Revision | Date |
|---|---|
| 100% DESIGN DEVELOPMENT | 10/23/13 |
| 90% CDs - 1ST PLAN CHECK | 12/24/13 |
| 2ND PLAN CHECK | 04/23/14 |

| | |
|---|---|
| Date | 9/19/13 |
| JWSE Job No. | 11145 |
| Drawn By | |
| Checked By | |
| Scale | |

CONSTRUCTION DOCUMENTS

Drawing Title
CONCRETE & MASONRY DETAILS

Drawing No.
S4.8

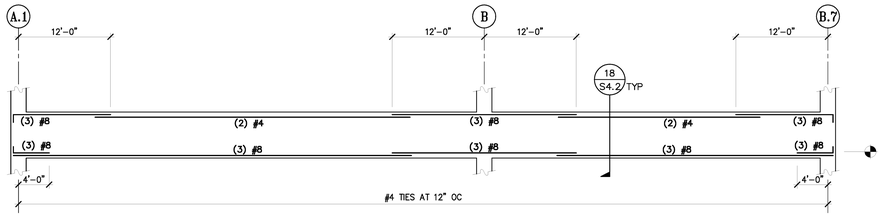


NOTES:

1. SEE PLANS FOR P/T CABLES AND PROFILE
2. LOCATE FIRST BEAM TIE 2" FROM COLUMN FACE
3. LENTON REBAR TERMINATORS MAY BE SUBSTITUTED FOR 90° HOOKS AT CONTRACTOR'S OPTION.

## TYPICAL BEAM ELEVATION 16 / S4.10

NO SCALE

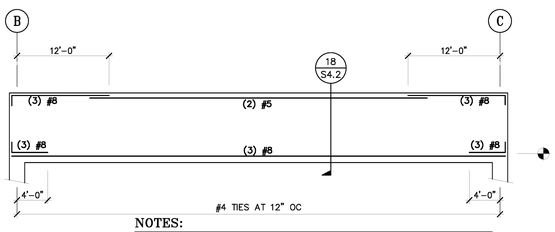


NOTES:

1. SEE PLANS FOR P/T CABLES AND PROFILE
2. LOCATE FIRST BEAM TIE 2" FROM COLUMN FACE
3. LENTON REBAR TERMINATORS MAY BE SUBSTITUTED FOR 90° HOOKS AT CONTRACTOR'S OPTION.

## BEAM ELEVATION 19 / S4.10

NO SCALE

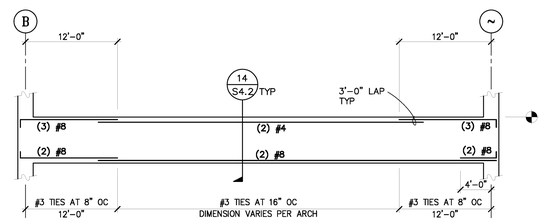


NOTES:

1. SEE PLANS FOR P/T CABLES AND PROFILE
2. LOCATE FIRST BEAM TIE 2" FROM COLUMN FACE
3. LENTON REBAR TERMINATORS MAY BE SUBSTITUTED FOR 90° HOOKS AT CONTRACTOR'S OPTION.
4. SEE 11/S4.2 AT SLEEVES

## TYPICAL BEAM ELEVATION 15 / S4.10

NO SCALE

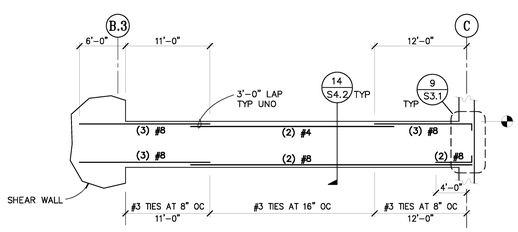


NOTES:

1. SEE PLANS FOR P/T CABLES AND PROFILE
2. LOCATE FIRST BEAM TIE 2" FROM COLUMN FACE
3. LENTON REBAR TERMINATORS MAY BE SUBSTITUTED FOR 90° HOOKS AT CONTRACTOR'S OPTION.
4. SEE 11/S4.2 AT SLEEVES

## TYPICAL BEAM ELEVATION 18 / S4.10

NO SCALE

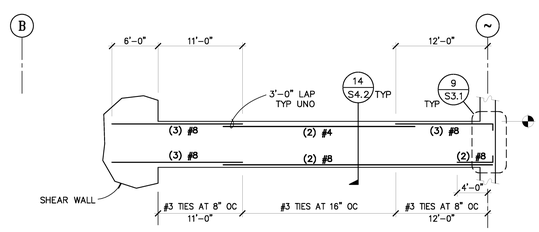


NOTES:

1. SEE PLANS FOR P/T CABLES AND PROFILE
2. LOCATE FIRST BEAM TIE 2" FROM COLUMN FACE
3. LENTON REBAR TERMINATORS MAY BE SUBSTITUTED FOR 90° HOOKS AT CONTRACTOR'S OPTION.
4. SEE 11/S4.2 AT SLEEVES

## TYPICAL BEAM ELEVATION 14 / S4.10

NO SCALE

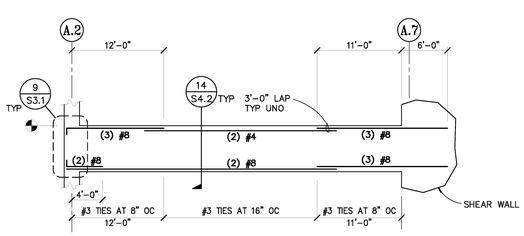


NOTES:

1. SEE PLANS FOR P/T CABLES AND PROFILE
2. LOCATE FIRST BEAM TIE 2" FROM COLUMN FACE
3. LENTON REBAR TERMINATORS MAY BE SUBSTITUTED FOR 90° HOOKS AT CONTRACTOR'S OPTION.
4. SEE 11/S4.2 AT SLEEVES

## TYPICAL BEAM ELEVATION 17 / S4.10

NO SCALE

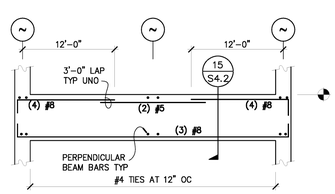


NOTES:

1. SEE PLANS FOR P/T CABLES AND PROFILE. PROVIDE HARPED TENDON PROFILE AT ALL TRANSFER GIRDERS.
2. LENTON REBAR TERMINATORS MAY BE SUBSTITUTED FOR 90° HOOKS AT CONTRACTOR'S OPTION.
3. NO SLEEVES OR OPENINGS THROUGH GIRDER ALLOWED.

## TYPICAL GIRDER ELEVATION 13 / S4.10

NO SCALE

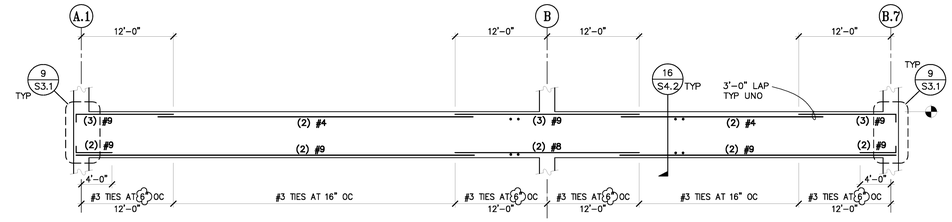


NOTES:

1. SEE PLANS FOR P/T CABLES AND PROFILE
2. LOCATE FIRST BEAM TIE 2" FROM COLUMN FACE
3. LENTON REBAR TERMINATORS MAY BE SUBSTITUTED FOR 90° HOOKS AT CONTRACTOR'S OPTION.
4. SEE 11/S4.2 AT SLEEVES

## TYPICAL BEAM ELEVATION 5 / S4.10

NO SCALE

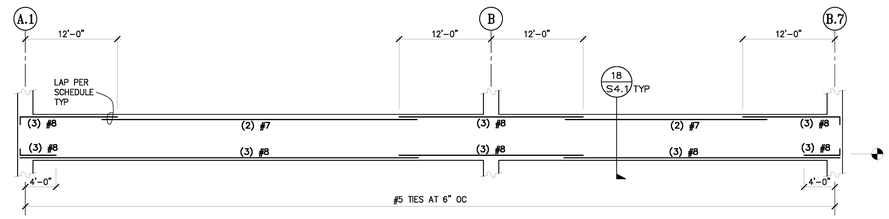


NOTES:

1. SEE PLANS FOR P/T CABLES AND PROFILE
2. LOCATE FIRST BEAM TIE 2" FROM COLUMN FACE
3. LENTON REBAR TERMINATORS MAY BE SUBSTITUTED FOR 90° HOOKS AT CONTRACTOR'S OPTION.

## TYPICAL BEAM ELEVATION 4 / S4.10

NO SCALE

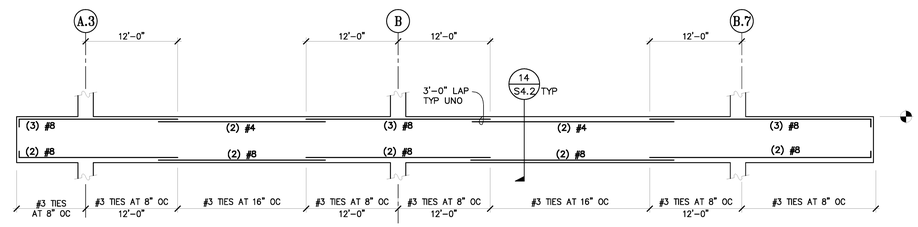


NOTES:

1. SEE PLANS FOR P/T CABLES AND PROFILE
2. LOCATE FIRST BEAM TIE 2" FROM COLUMN FACE
3. LENTON REBAR TERMINATORS MAY BE SUBSTITUTED FOR 90° HOOKS AT CONTRACTOR'S OPTION.
4. SEE 11/S4.2 AT SLEEVES

## TYPICAL BEAM ELEVATION 3 / S4.10

NO SCALE

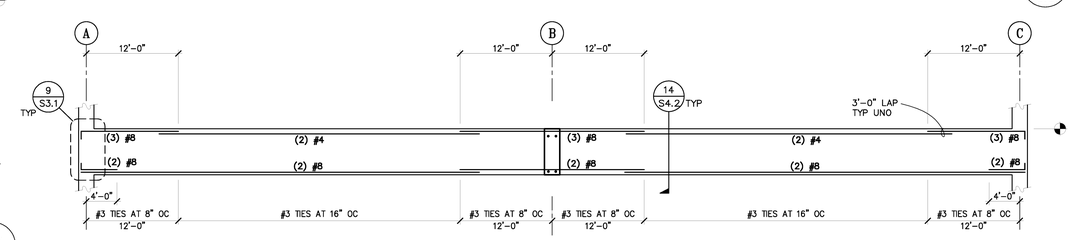


NOTES:

1. SEE PLANS FOR P/T CABLES AND PROFILE
2. LOCATE FIRST BEAM TIE 2" FROM COLUMN FACE
3. LENTON REBAR TERMINATORS MAY BE SUBSTITUTED FOR 90° HOOKS AT CONTRACTOR'S OPTION.
4. SEE 11/S4.2 AT SLEEVES

## TYPICAL BEAM ELEVATION 2 / S4.10

NO SCALE

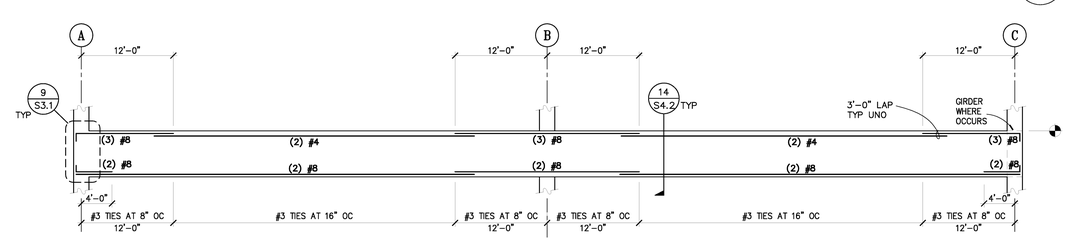


NOTES:

1. SEE PLANS FOR P/T CABLES AND PROFILE
2. LOCATE FIRST BEAM TIE 2" FROM COLUMN FACE
3. LENTON REBAR TERMINATORS MAY BE SUBSTITUTED FOR 90° HOOKS AT CONTRACTOR'S OPTION.
4. SEE 11/S4.2 AT SLEEVES

## TYPICAL BEAM ELEVATION 1 / S4.10

NO SCALE

**County of San Diego**
**Cedar & Kettner**
**Development Project**
San Diego, California

McCARTHY

20401 S.W. BIRCH STREET SUITE 300
Newport Beach, California 92660

Architect

IPD

Alameda
Irvine
Los Angeles

Architecture / Engineering / Consulting
www.ipd-global.com

2 Faraday, Suite 101, Irvine CA 92618
Phone 949 595 8004 Fax 949 595 8011

JW JESSEN-WRIGHT Structural Engineers

100 AMBER GROVE DRIVE, SUITE 109
CHICO, CALIFORNIA 95973
(530) 894-5345 FAX (530) 894-3016

REGISTERED PROFESSIONAL ENGINEER KENT D. JESSEN NO. 2393 EXP. 3-31-15 STRUCTURAL ENGINEERING STATE OF CALIFORNIA

| Revision | Date |
|---|---|
| 100% DESIGN DEVELOPMENT | 10/23/13 |
| 90% CDs - 1ST PLAN CHECK | 12/24/13 |
| 2ND PLAN CHECK | 04/23/14 |

| | |
|---|---|
| Date | 9/19/13 |
| JWSE Job No. | 11145 |
| Drawn By | |
| Checked By | |
| Scale | |

CONSTRUCTION DOCUMENTS

Drawing Title

BEAM ELEVATIONS

Drawing No.

**S4.10**

IPD, Inc.

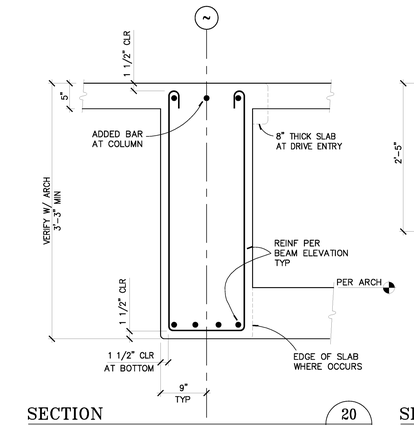


SECTION 20 / S4.11
NO SCALE

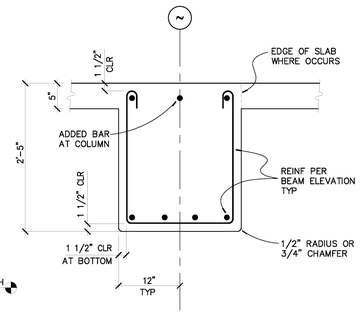


SECTION 16 / S4.11
NO SCALE

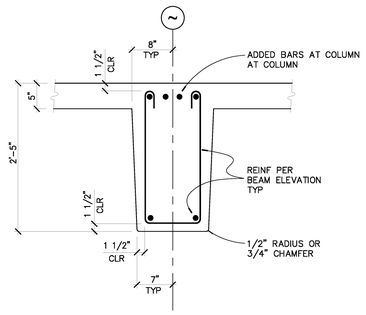


SECTION 12 / S4.11
NO SCALE

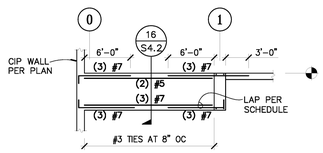


NOTES:
1. SEE PLANS FOR P/T CABLES AND PROFILE
2. LOCATE FIRST BEAM TIE 2" FROM COLUMN FACE
3. LENTON REBAR TERMINATORS MAY BE SUBSTITUTED FOR 90° HOOKS AT CONTRACTOR'S OPTION.

TYPICAL BEAM ELEVATION 19 / S4.11
NO SCALE

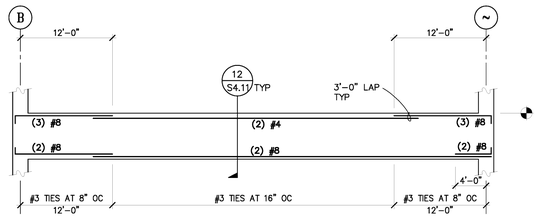


NOTES:
1. SEE PLANS FOR P/T CABLES AND PROFILE
2. LOCATE FIRST BEAM TIE 2" FROM COLUMN FACE
3. LENTON REBAR TERMINATORS MAY BE SUBSTITUTED FOR 90° HOOKS AT CONTRACTOR'S OPTION.
4. SEE 11/S4.2 AT SLEEVES

TYPICAL BEAM ELEVATION 15 / S4.11
NO SCALE

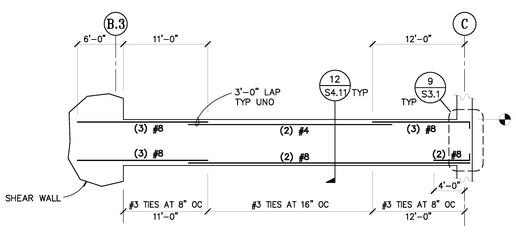


NOTES:
1. SEE PLANS FOR P/T CABLES AND PROFILE
2. LOCATE FIRST BEAM TIE 2" FROM COLUMN FACE
3. LENTON REBAR TERMINATORS MAY BE SUBSTITUTED FOR 90° HOOKS AT CONTRACTOR'S OPTION.
4. SEE 11/S4.2 AT SLEEVES

TYPICAL BEAM ELEVATION 18 / S4.11
NO SCALE

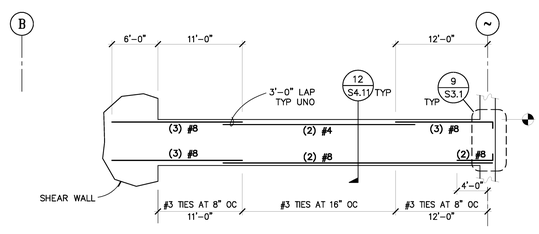


NOTES:
1. SEE PLANS FOR P/T CABLES AND PROFILE
2. LOCATE FIRST BEAM TIE 2" FROM COLUMN FACE
3. LENTON REBAR TERMINATORS MAY BE SUBSTITUTED FOR 90° HOOKS AT CONTRACTOR'S OPTION.
4. SEE 11/S4.2 AT SLEEVES

TYPICAL BEAM ELEVATION 14 / S4.11
NO SCALE

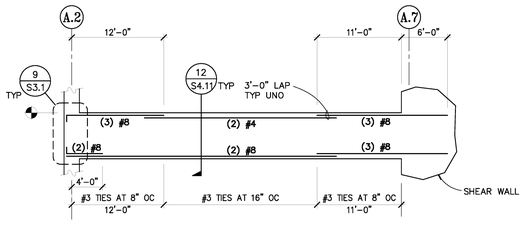


NOTES:
1. SEE PLANS FOR P/T CABLES AND PROFILE
2. LOCATE FIRST BEAM TIE 2" FROM COLUMN FACE
3. LENTON REBAR TERMINATORS MAY BE SUBSTITUTED FOR 90° HOOKS AT CONTRACTOR'S OPTION.
4. SEE 11/S4.2 AT SLEEVES

TYPICAL BEAM ELEVATION 17 / S4.11
NO SCALE

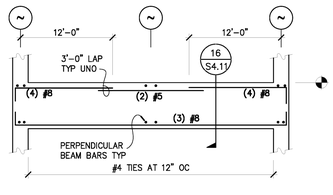


NOTES:
1. SEE PLANS FOR P/T CABLES AND PROFILE. PROVIDE HARPED TENDON PROFILE AT ALL TRANSFER GIRDERS.
2. LENTON REBAR TERMINATORS MAY BE SUBSTITUTED FOR 90° HOOKS AT CONTRACTOR'S OPTION.
3. NO SLEEVES OR OPENINGS THROUGH GIRDER ALLOWED.

TYPICAL GIRDER ELEVATION 13 / S4.11
NO SCALE

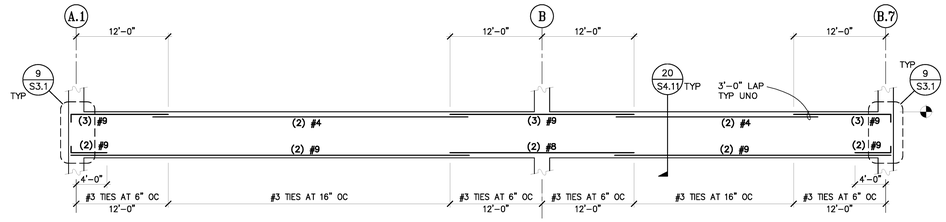


NOTES:
1. SEE PLANS FOR P/T CABLES AND PROFILE
2. LOCATE FIRST BEAM TIE 2" FROM COLUMN FACE
3. LENTON REBAR TERMINATORS MAY BE SUBSTITUTED FOR 90° HOOKS AT CONTRACTOR'S OPTION.
4. SEE 11/S4.2 AT SLEEVES

TYPICAL BEAM ELEVATION 5 / S4.11
NO SCALE

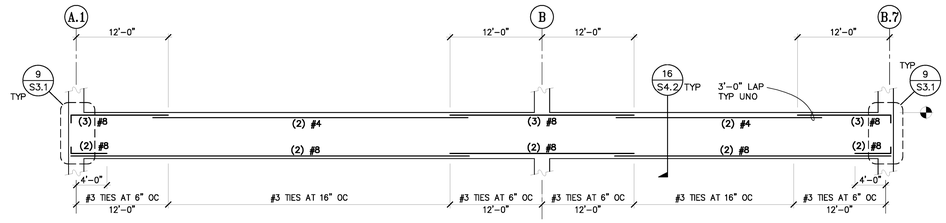


NOTES:
1. SEE PLANS FOR P/T CABLES AND PROFILE
2. LOCATE FIRST BEAM TIE 2" FROM COLUMN FACE
3. LENTON REBAR TERMINATORS MAY BE SUBSTITUTED FOR 90° HOOKS AT CONTRACTOR'S OPTION.
4. SEE 11/S4.2 AT SLEEVES

TYPICAL BEAM ELEVATION 4 / S4.11
NO SCALE

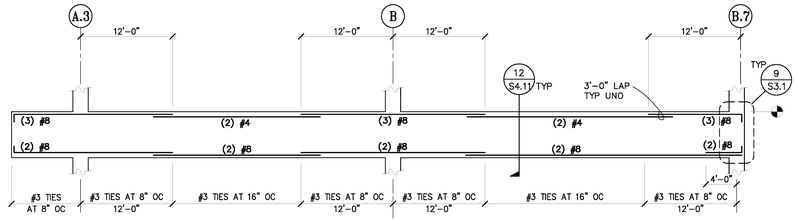


NOTES:
1. SEE PLANS FOR P/T CABLES AND PROFILE
2. LOCATE FIRST BEAM TIE 2" FROM COLUMN FACE
3. LENTON REBAR TERMINATORS MAY BE SUBSTITUTED FOR 90° HOOKS AT CONTRACTOR'S OPTION.
4. SEE 11/S4.2 AT SLEEVES

TYPICAL BEAM ELEVATION 3 / S4.11
NO SCALE

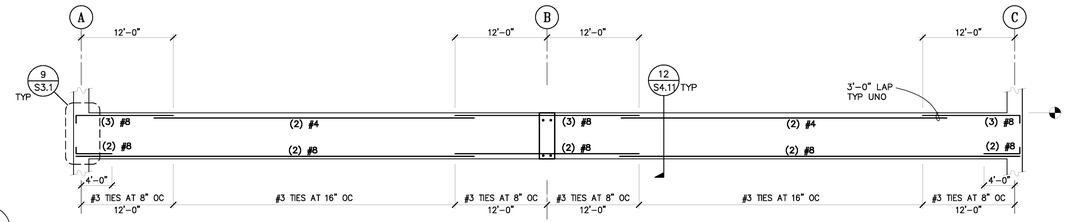


NOTES:
1. SEE PLANS FOR P/T CABLES AND PROFILE
2. LOCATE FIRST BEAM TIE 2" FROM COLUMN FACE
3. LENTON REBAR TERMINATORS MAY BE SUBSTITUTED FOR 90° HOOKS AT CONTRACTOR'S OPTION.
4. SEE 11/S4.2 AT SLEEVES

TYPICAL BEAM ELEVATION 2 / S4.11
NO SCALE

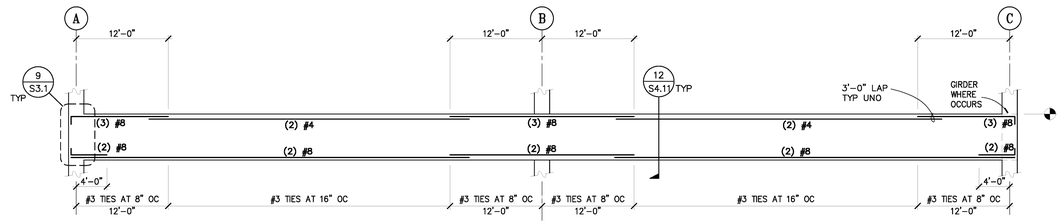


NOTES:
1. SEE PLANS FOR P/T CABLES AND PROFILE
2. LOCATE FIRST BEAM TIE 2" FROM COLUMN FACE
3. LENTON REBAR TERMINATORS MAY BE SUBSTITUTED FOR 90° HOOKS AT CONTRACTOR'S OPTION.
4. SEE 11/S4.2 AT SLEEVES

TYPICAL BEAM ELEVATION 1 / S4.11
NO SCALE

**County of San Diego Cedar & Kettner Development Project**
San Diego, California

McCARTHY
2040L S.W. BIRCH STREET SUITE 300
Newport Beach, California 92660

Architect
IPD
Alameda
Irvine
Los Angeles
Architecture / Engineering / Consulting
www.ipd-global.com
2 Faraday, Suite 101, Irvine CA 92618
Phone 949 595 8004 Fax 949 595 8011

JW JESSEN-WRIGHT Structural Engineers
100 AMBER GROVE DRIVE, SUITE 109
CHICO, CALIFORNIA 95973
(530) 894-5345 FAX (530) 894-3016

REGISTERED PROFESSIONAL ENGINEER KENT D. JESSEN STATE OF CALIFORNIA

| Revision | Date |
|---|---|
| 100% DESIGN DEVELOPMENT | 10/23/13 |
| 90% CDs - 1ST PLAN CHECK | 12/24/13 |
| 2ND PLAN CHECK | 04/23/14 |

| | |
|---|---|
| Date | 9/19/13 |
| JWSE Job No. | 11145 |
| Drawn By | |
| Checked By | |
| Scale | |

CONSTRUCTION DOCUMENTS

Drawing Title
BEAM ELEVATIONS

Drawing No.
**S4.11**

IPD, Inc.

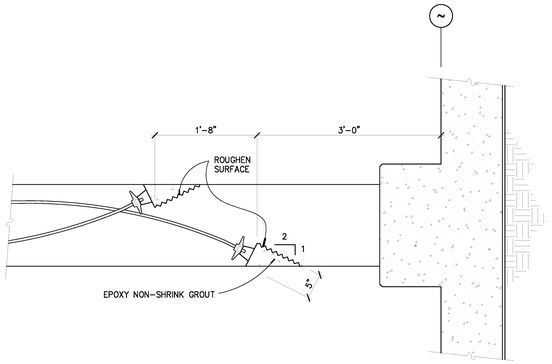


SECTION 20/S4.12
NO SCALE

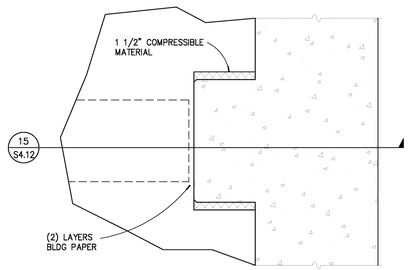


PLAN-SECTION 16/S4.12
NO SCALE

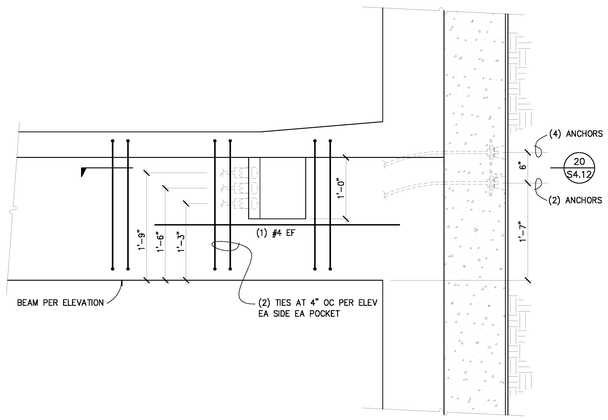


SECTION 19/S4.12
NO SCALE

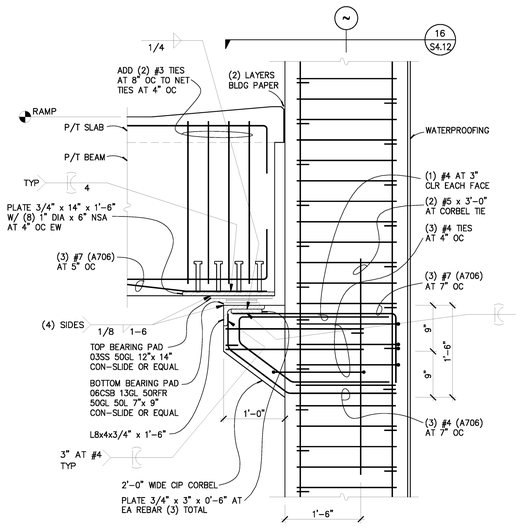


SECTION 15/S4.12
NO SCALE

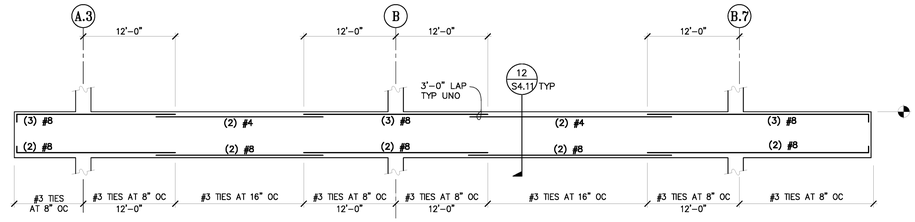


NOTES:
1. SEE PLANS FOR P/T CABLES AND PROFILE
2. LOCATE FIRST BEAM TIE 2" FROM COLUMN FACE
3. LENTON REBAR TERMINATORS MAY BE SUBSTITUTED FOR 90° HOOKS AT CONTRACTOR'S OPTION.
4. SEE 11/S4.2 AT SLEEVES

BEAM ELEVATION AT GRID 2 5/S4.12
NO SCALE

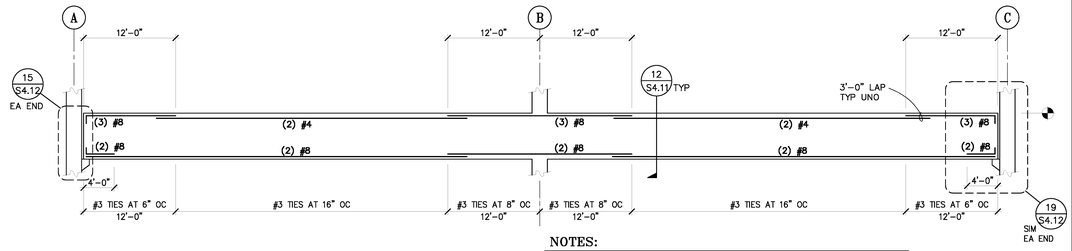


NOTES:
1. SEE PLANS FOR P/T CABLES AND PROFILE
2. LOCATE FIRST BEAM TIE 2" FROM END OF BEAM
3. LENTON REBAR TERMINATORS MAY BE SUBSTITUTED FOR 90° HOOKS AT CONTRACTOR'S OPTION.
4. SEE 11/S4.2 AT SLEEVES

BEAM ELEVATION AT GRID 11 4/S4.12
NO SCALE

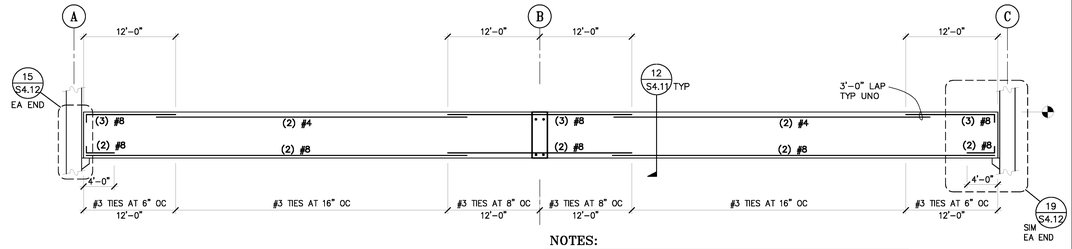


NOTES:
1. SEE PLANS FOR P/T CABLES AND PROFILE
2. LOCATE FIRST BEAM TIE 2" FROM END OF BEAM
3. LENTON REBAR TERMINATORS MAY BE SUBSTITUTED FOR 90° HOOKS AT CONTRACTOR'S OPTION.
4. SEE 11/S4.2 AT SLEEVES

BEAM ELEVATION AT GRID 10 3/S4.12
NO SCALE

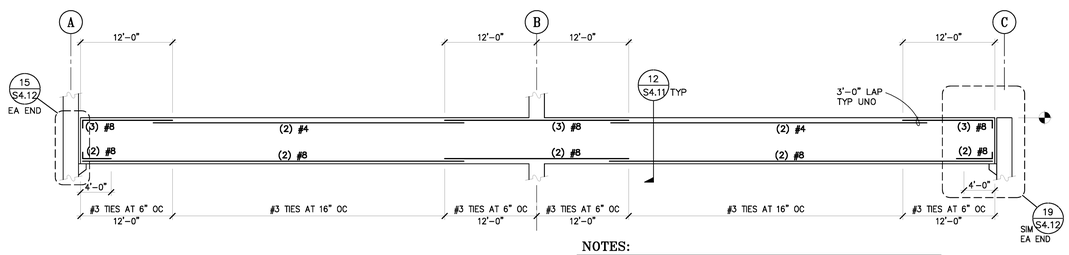


NOTES:
1. SEE PLANS FOR P/T CABLES AND PROFILE
2. LOCATE FIRST BEAM TIE 2" FROM END OF BEAM
3. LENTON REBAR TERMINATORS MAY BE SUBSTITUTED FOR 90° HOOKS AT CONTRACTOR'S OPTION.
4. SEE 11/S4.2 AT SLEEVES

BEAM ELEVATION AT GRID 11 14/S4.12
NO SCALE




NOTES:
1. SEE PLANS FOR P/T CABLES AND PROFILE
2. LOCATE FIRST BEAM TIE 2" FROM COLUMN FACE
3. LENTON REBAR TERMINATORS MAY BE SUBSTITUTED FOR 90° HOOKS AT CONTRACTOR'S OPTION.
4. SEE 11/S4.2 AT SLEEVES

BEAM ELEVATION AT GRID 10 13/S4.12
NO SCALE

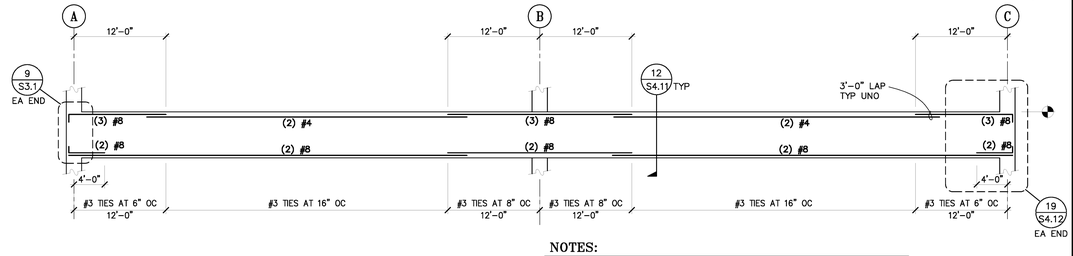


NOTES:
1. SEE PLANS FOR P/T CABLES AND PROFILE
2. LOCATE FIRST BEAM TIE 2" FROM COLUMN FACE
3. LENTON REBAR TERMINATORS MAY BE SUBSTITUTED FOR 90° HOOKS AT CONTRACTOR'S OPTION.
4. SEE 11/S4.2 AT SLEEVES

BEAM ELEVATION AT GRIDS 4 & 9 2/S4.12
NO SCALE

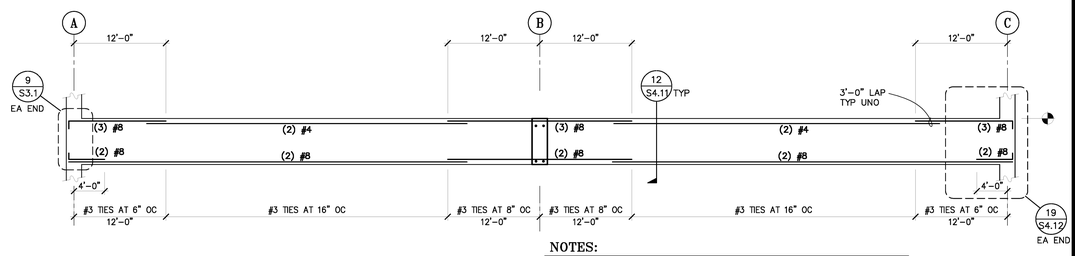


NOTES:
1. SEE PLANS FOR P/T CABLES AND PROFILE
2. LOCATE FIRST BEAM TIE 2" FROM COLUMN FACE
3. LENTON REBAR TERMINATORS MAY BE SUBSTITUTED FOR 90° HOOKS AT CONTRACTOR'S OPTION.
4. SEE 11/S4.2 AT SLEEVES

BEAM ELEVATION AT GRID 3 1/S4.12
NO SCALE

**County of San Diego**
**Cedar & Kettner**
**Development Project**
San Diego, California

McCARTHY
2040L S.W. BIRCH STREET SUITE 300
Newport Beach, California 92660

Architect
Alameda
Irvine
Los Angeles
IPD
Architecture / Engineering / Consulting
www.ipd-global.com
2 Faraday, Suite 101, Irvine CA 92618
Phone 949 595 8004 Fax 949 595 8011

JESSEN-WRIGHT
Structural Engineers
100 AMBER GROVE DRIVE, SUITE 109
CHICO, CALIFORNIA 95973
(530) 894-5345 FAX (530) 894-3016

REGISTERED PROFESSIONAL ENGINEER
KEVIN D. JESSEN
STATE OF CALIFORNIA

| Revision | Date |
|---|---|
| 100% DESIGN DEVELOPMENT | 10/23/13 |
| 90% CDs - 1ST PLAN CHECK | 12/24/13 |
| 2ND PLAN CHECK | 04/23/14 |

| | |
|---|---|
| Date | 9/19/13 |
| JWSE Job No. | 11145 |
| Drawn By | |
| Checked By | |
| Scale | |

CONSTRUCTION DOCUMENTS

Drawing Title
BEAM ELEVATIONS

Drawing No.
**S4.12**

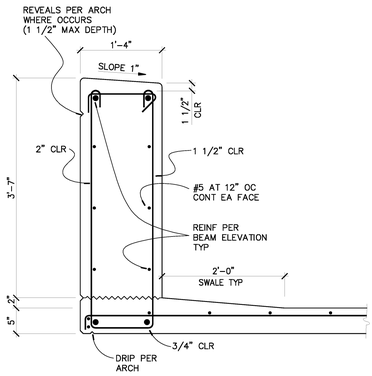


SECTION 19 / S4.9
NO SCALE

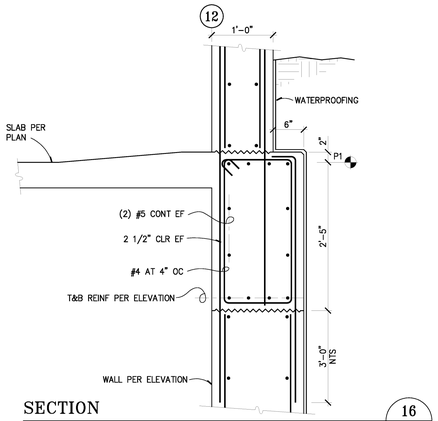


SECTION 16 / S4.13
NO SCALE

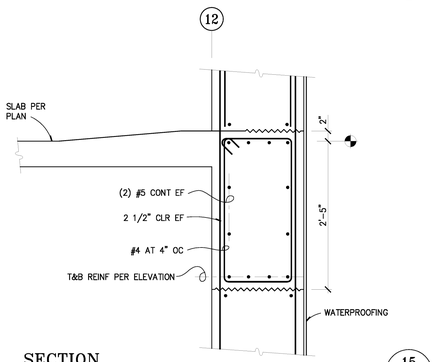


SECTION 15 / S4.13
NO SCALE

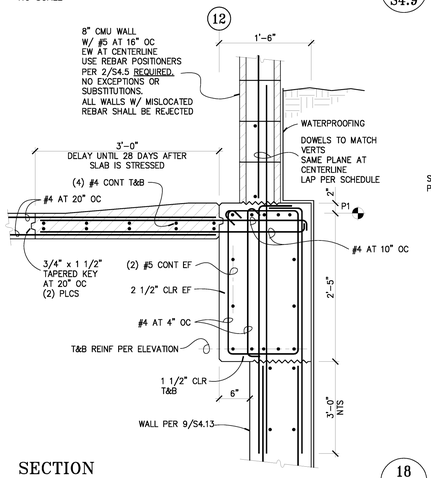


SECTION 18 / S4.13
NO SCALE

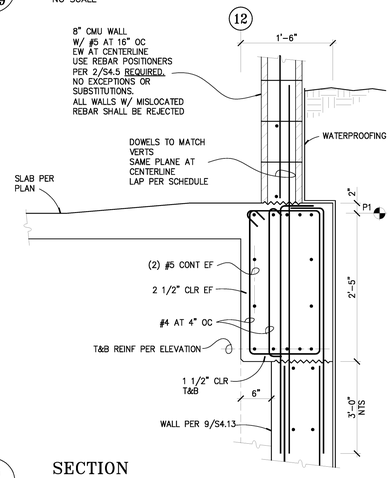


SECTION 14 / S4.13
NO SCALE

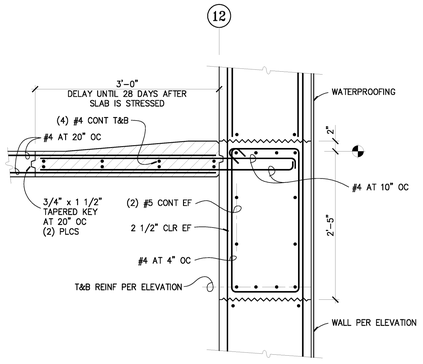


SECTION 17 / S4.13
NO SCALE

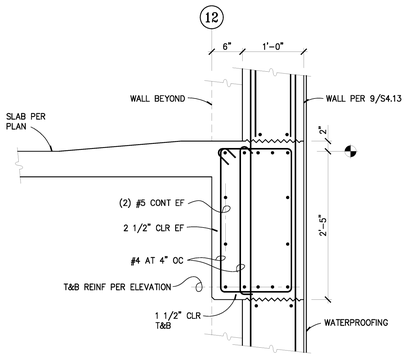


SECTION 13 / S4.13
NO SCALE

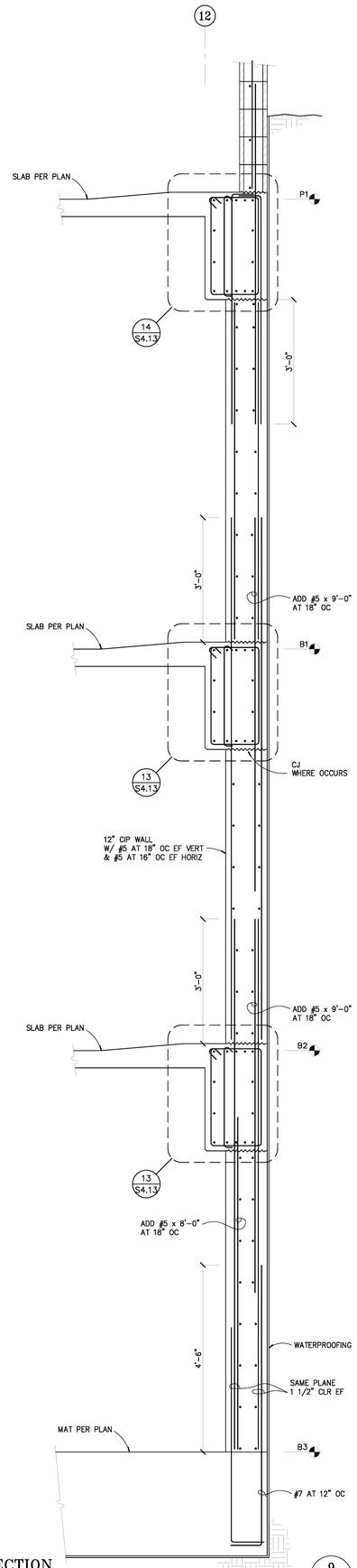


SECTION 9 / S4.13
NO SCALE

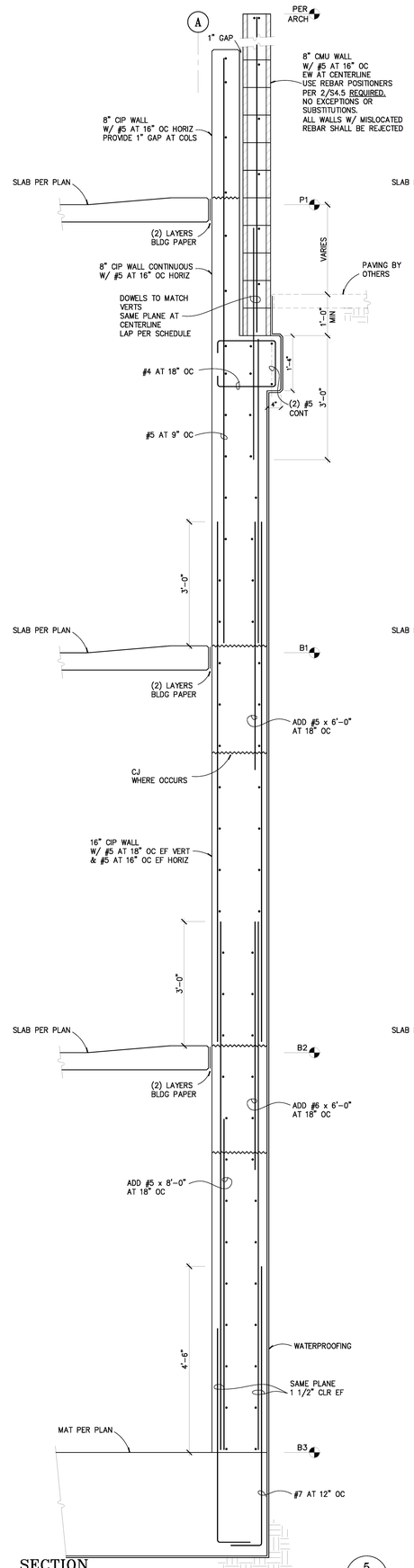


SECTION 5 / S4.13
NO SCALE

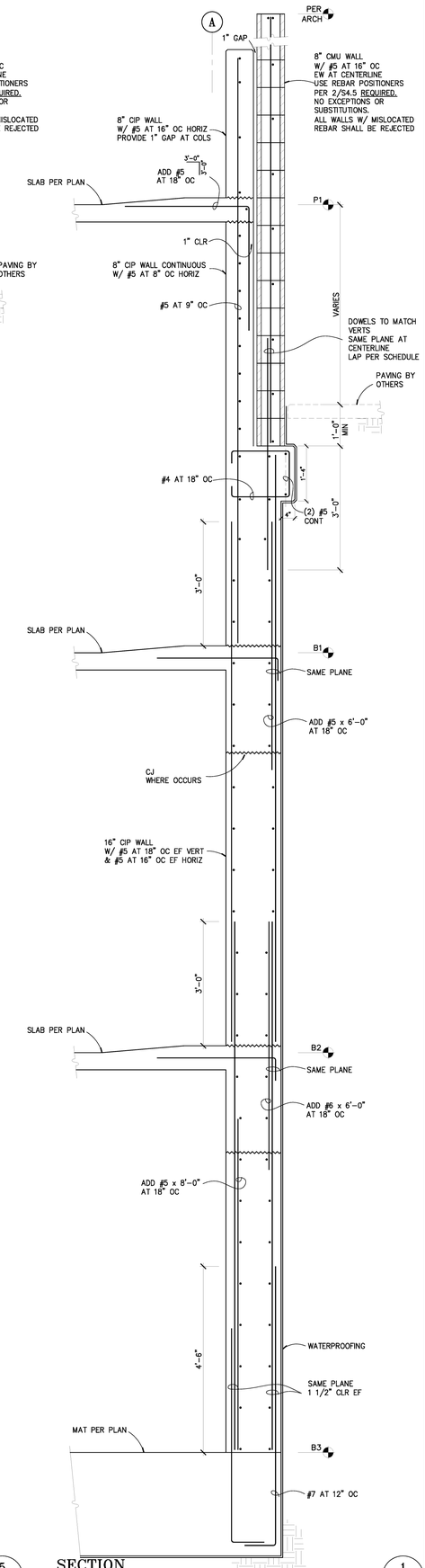


SECTION 1 / S4.13
NO SCALE

**County of San Diego Cedar & Kettner Development Project**
San Diego, California

McCARTHY
2040L S.W. BIRCH STREET SUITE 300
Newport Beach, California 92660

Architect
Alameda
Irvine
Los Angeles
IPD
Architecture / Engineering / Consulting
www.ipd-global.com
2 Faraday, Suite 101, Irvine CA 92618
Phone 949 595 8004 Fax 949 595 8011

JW JESSEN-WRIGHT Structural Engineers
100 AMBER GROVE DRIVE, SUITE 109
CHICO, CALIFORNIA 95973
(530) 894-5345 FAX (530) 894-3016

REGISTERED PROFESSIONAL ENGINEER
KENT D. JESSEN
NO. 6338
EXP. 3-31-15
STATE OF CALIFORNIA

| Revision | Date |
|---|---|
| 100% DESIGN DEVELOPMENT | 10/23/13 |
| 90% CDs - 1ST PLAN CHECK | 12/24/13 |
| 2ND PLAN CHECK | 04/23/14 |

| | |
|---|---|
| Date | 9/19/13 |
| JWSE Job No. | 11145 |
| Drawn By | |
| Checked By | |
| Scale | |

CONSTRUCTION DOCUMENTS

Drawing Title
CONCRETE DETAILS

Drawing No.
**S4.13**

PD, Inc.

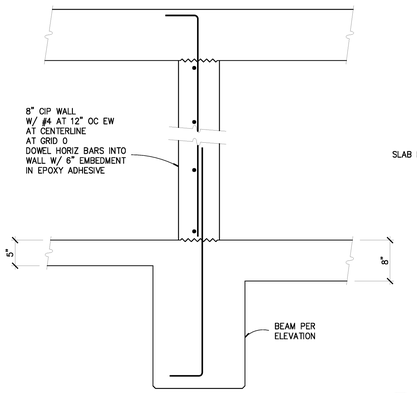


SECTION 20/S4.14
NO SCALE

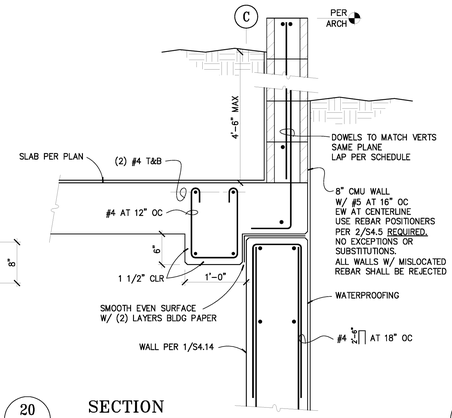


SECTION 16/S4.14
NO SCALE

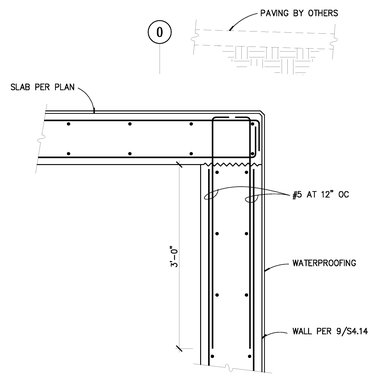


SECTION 12/S4.14
NO SCALE

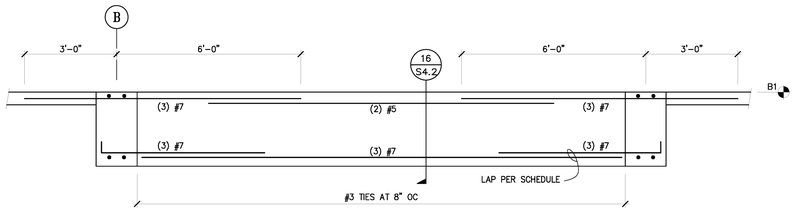


NOTES:

1. SEE PLANS FOR P/T CABLES AND PROFILE
2. LOCATE FIRST BEAM TIE 2" FROM COLUMN FACE
3. LENTON REBAR TERMINATORS MAY BE SUBSTITUTED FOR 90° HOOKS AT CONTRACTOR'S OPTION.

BEAM ELEVATION 4/S4.14
NO SCALE

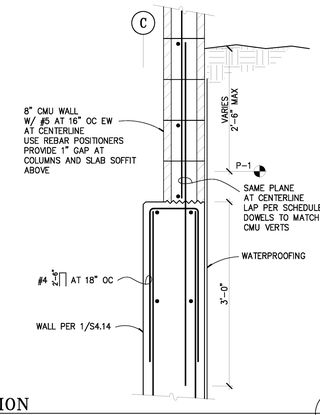


SECTION 19/S4.14
NO SCALE

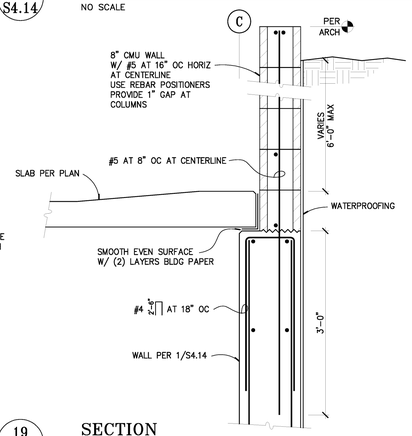


SECTION 15/S4.14
NO SCALE

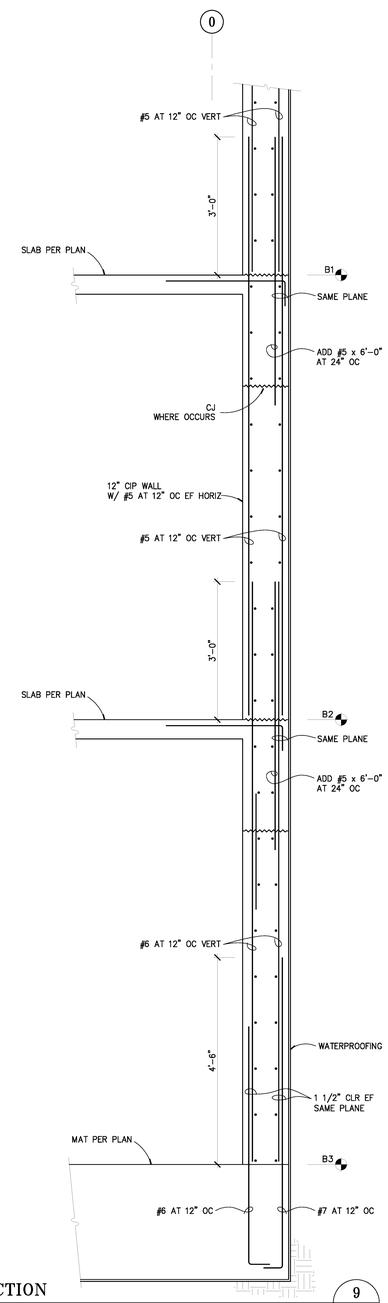


SECTION 9/S4.14
NO SCALE

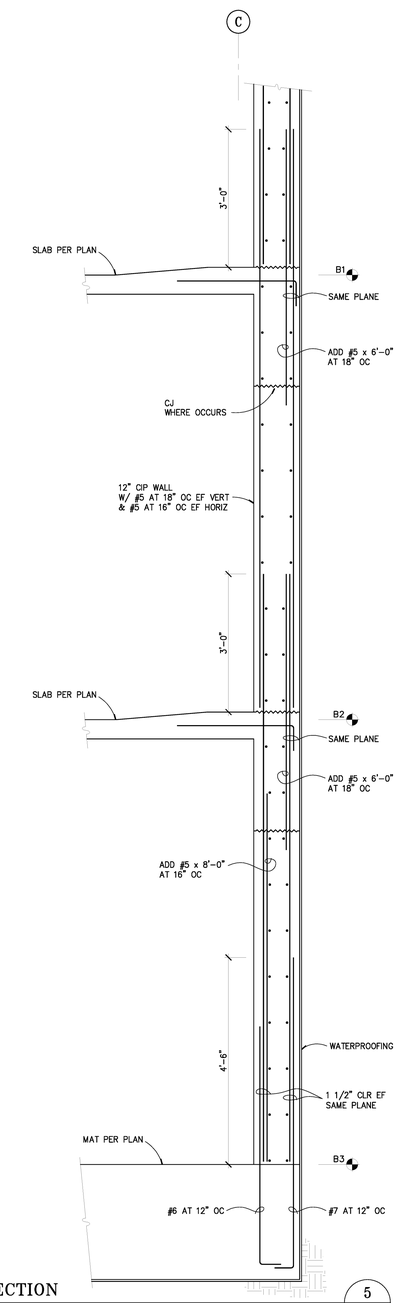


SECTION 5/S4.14
NO SCALE

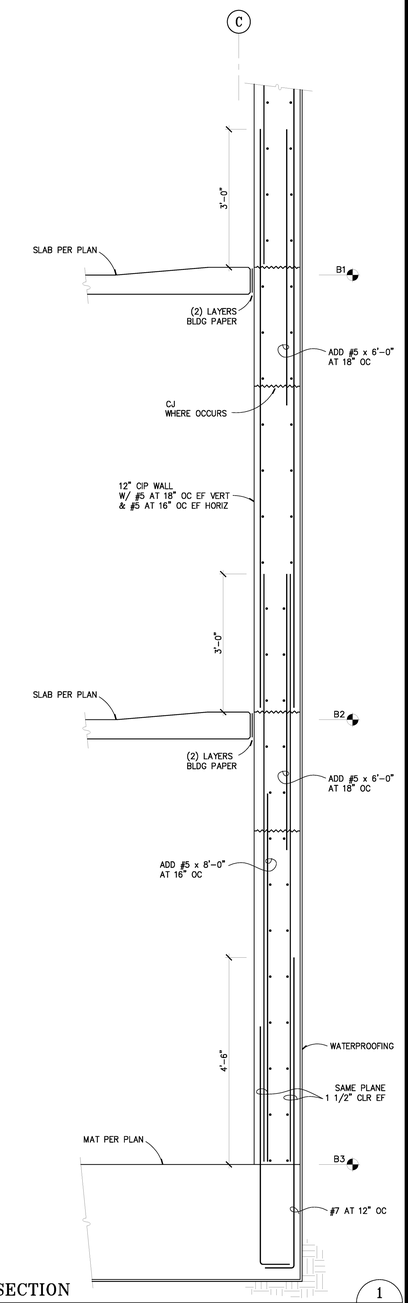


SECTION 1/S4.14
NO SCALE

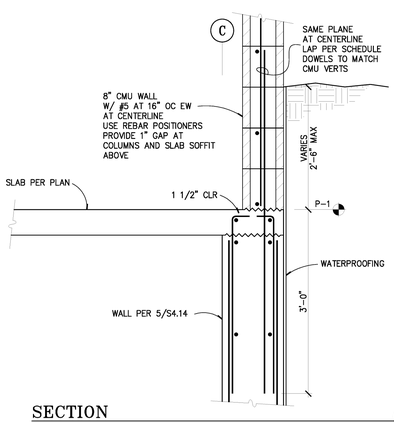


SECTION 18/S4.14
NO SCALE

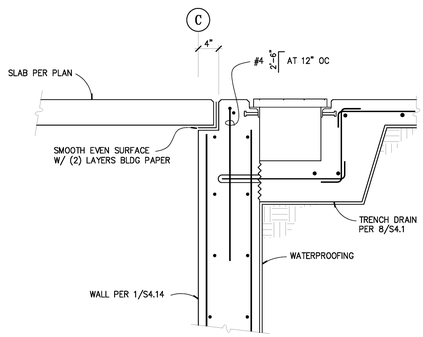


SECTION 14/S4.14
NO SCALE

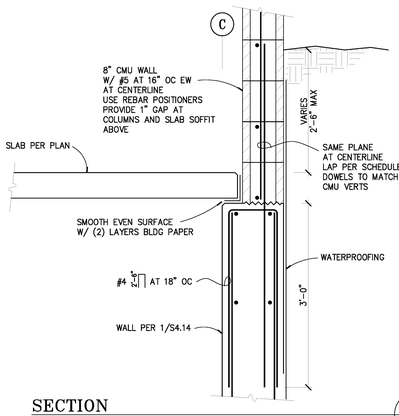


SECTION 17/S4.14
NO SCALE

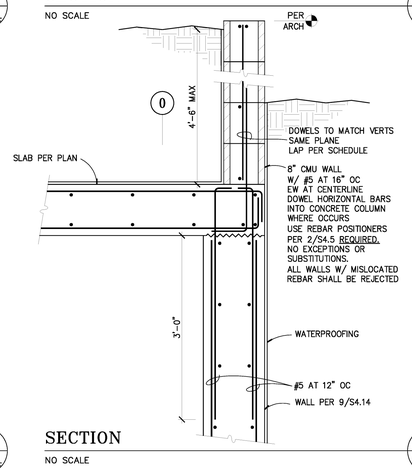


SECTION 13/S4.14
NO SCALE

**County of San Diego**
**Cedar & Kettner**
**Development Project**
San Diego, California

McCARTHY


2040L S.W. BIRCH STREET SUITE 300
Newport Beach, California 92660

Architect
Alameda
Irvine
Los Angeles
IPD
Architecture / Engineering / Consulting
www.ipd-global.com
2 Faraday, Suite 101, Irvine CA 92618
Phone 949 595 8004 Fax 949 595 8011

JW JESSEN-WRIGHT
Structural Engineers
100 AMBER GROVE DRIVE, SUITE 109
CHICO, CALIFORNIA 95973
(530) 894-5345 FAX (530) 894-3016


REGISTERED PROFESSIONAL ENGINEER
KEITH D. JESSEN
NO. 2393
EXP. 3/31/15
STATE OF CALIFORNIA

| Revision | Date |
|---|---|
| 100% DESIGN DEVELOPMENT | 10/23/13 |
| 90% CDs - 1ST PLAN CHECK | 12/24/13 |
| 2ND PLAN CHECK | 04/23/14 |

| | |
|---|---|
| Date | 9/19/13 |
| JWSE Job No. | 11145 |
| Drawn By | |
| Checked By | |
| Scale | |

CONSTRUCTION DOCUMENTS

Drawing Title
CONCRETE DETAILS

Drawing No.
**S4.14**

IPD, Inc.

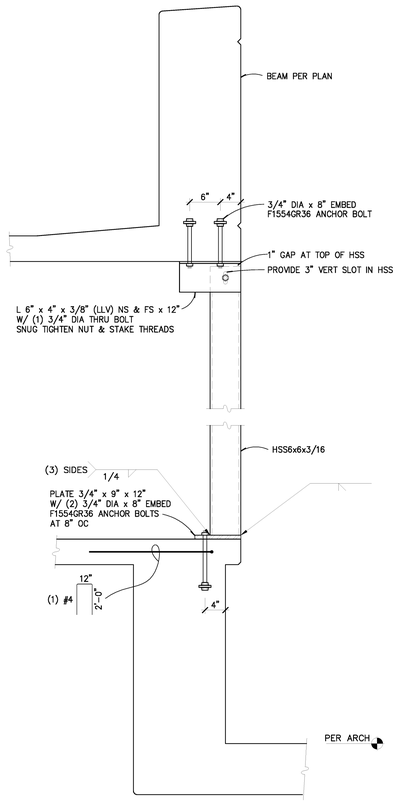


SECTION
NO SCALE
15
S5.1

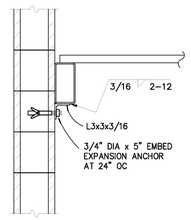


SECTION
NO SCALE
11
S5.1

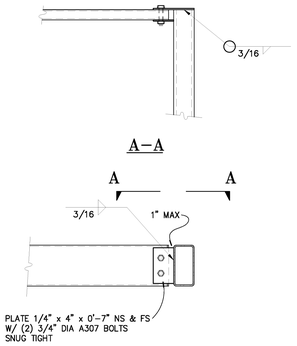


SECTION
NO SCALE
8
S5.1

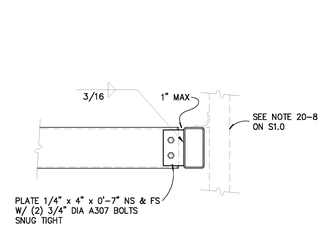


SECTION
NO SCALE
7
S5.1

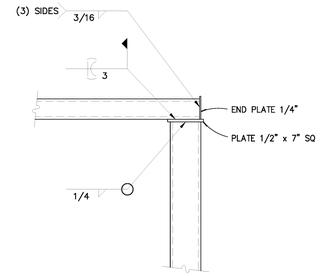


SECTION
NO SCALE
4
S5.1

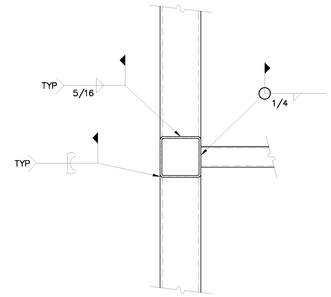


PLAN–SECTION
NO SCALE
3
S5.1

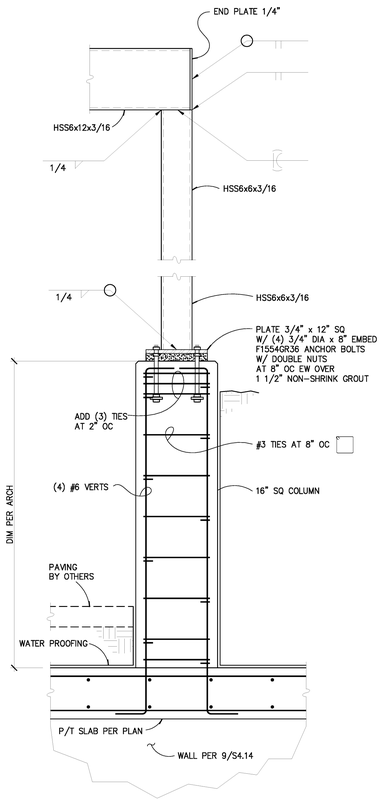


SECTION
NO SCALE
17
S5.1

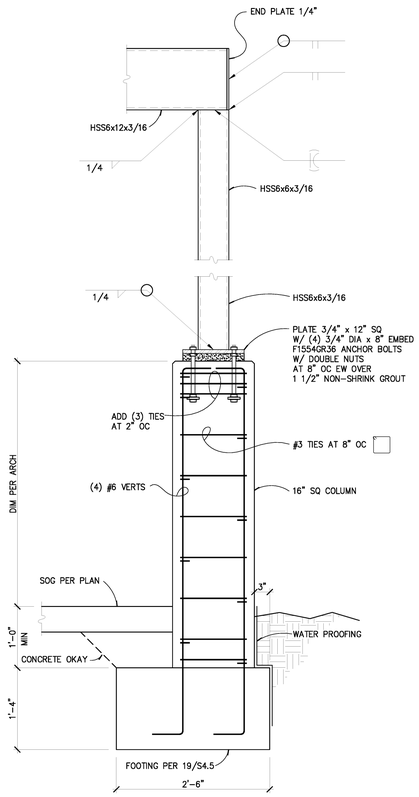


SECTION
NO SCALE
13
S5.1

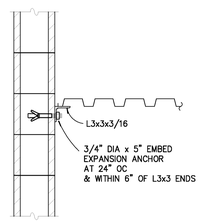


SECTION
NO SCALE
10
S5.1

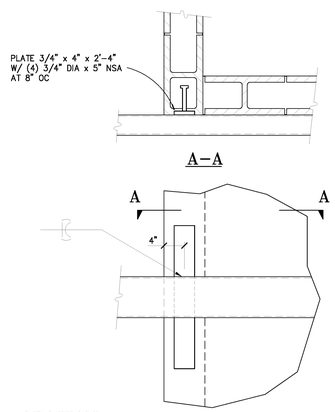


SECTION
NO SCALE
6
S5.1




TYPICAL STAIR CONNECTION
NO SCALE
2
S5.1

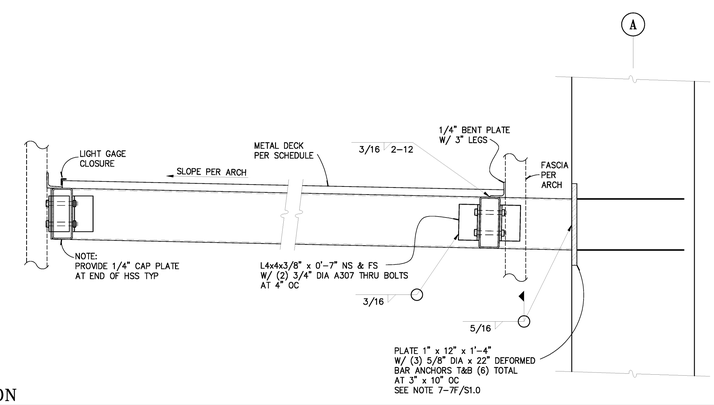


SECTION
NO SCALE
5
S5.1

| DECK MARK | DECK GAGE | GALVANIZED METAL DECK (G60) VERCO OR EQUIVALENT | ① MINIMUM SPANS | ② STUD LENGTH (INCHES) | CONCRETE FILL ③ ④ NET THICKNESS (INCHES) | CONCRETE FILL ③ ④ TOTAL THICKNESS (INCHES) | WELDS TO SUPPORTS ⑤ PUDDLE WELD SPACING PARALLEL TO FLUTES | WELDS TO SUPPORTS ⑤ PUDDLE WELDS PER SHT. PERPENDICULAR TO FLUTES | SIDE LAPS BUTTON PUNCH SPACING | ICC# ESR-1735P |
|---|---|---|---|---|---|---|---|---|---|---|
| D1 | 20 | W3 FORMLOCK | 1 | 4 1/2 | 2 1/2 | 5 1/2 | 12 | 4 | 24 | -- |
| D2 | 18 | W3 FORMLOCK | 1 | 4 1/2 | ⑥ | ⑥ | 12 | 4 | 24 | -- |
| D3 | 18 | HSB-36 | 1 | -- | -- | -- | 12 | 7 | 12 | -- |
| | | | | | | | | | | |
| | | | | | | | | | | |

NOTES:

① DECK ORIENTATION AS SHOWN ON PLANS OVER MINIMUM NUMBER OF SPANS SHOWN. INCREASE METAL DECK GAGE AS REQUIRED TO ALLEVIATE SHORING IF MINIMUM NUMBER OF SPANS CAN NOT BE OBTAINED.

② PROVIDE 3/4" DIA NELSON STUD ANCHORS EQUALLY SPACED OVER LENGTH OF BEAM. SEE PLAN [ ] FOR QUANTITIES. PUDDLE WELDS MAY BE OMITTED WHERE STUD SPACING COINCIDES WITH WELD SPACING.

③ SEE GENERAL NOTES FOR CONCRETE TYPE & STRENGTH. REINFORCE WITH 6x6 – W1.4xW1.4 WWF.

④ WHERE CONCRETE FILL OR INSULATING CONCRETE FILL IS PLACED OVER METAL DECK, PROVIDE VENT TABS PER MANUFACTURER'S RECOMMENDATIONS.

⑤ PROVIDE 3/4" DIA PUDDLE WELDS AS INDICATED.

⑥ VARIES PER 20/S4.6

METAL DECK SCHEDULE
NO SCALE
1
S5.1

**County of San Diego**
**Cedar & Kettner**
**Development Project**
San Diego, California

McCARTHY

2040L S.W. BIRCH STREET SUITE 300
Newport Beach, California 92660

Architect

IPD

Alameda
Irvine
Los Angeles

Architecture / Engineering / Consulting
www.ipd-global.com

2 Faraday, Suite 101, Irvine CA 92618
Phone 949 595 8004 Fax 949 595 8011

JW JESSEN-WRIGHT
Structural Engineers

100 AMBER GROVE DRIVE, SUITE 109
CHICO, CALIFORNIA 95973
(530) 894-5345 FAX (530) 894-3016

REGISTERED PROFESSIONAL ENGINEER
KENT D. JESSEN
NO. 3193
EXP. 9/30/14
STRUCTURAL
STATE OF CALIFORNIA

| Revision | Date |
|---|---|
| 100% DESIGN DEVELOPMENT | 10/23/13 |
| 90% CDs - 1ST PLAN CHECK | 12/24/13 |
| 2ND PLAN CHECK | 04/23/14 |

| | |
|---|---|
| Date | 9/19/13 |
| JWSE Job No. | 11145 |
| Drawn By | |
| Checked By | |
| Scale | |

CONSTRUCTION DOCUMENTS

Drawing Title
STEEL DETAILS

Drawing No.
**S5.1**

IPD, Inc.

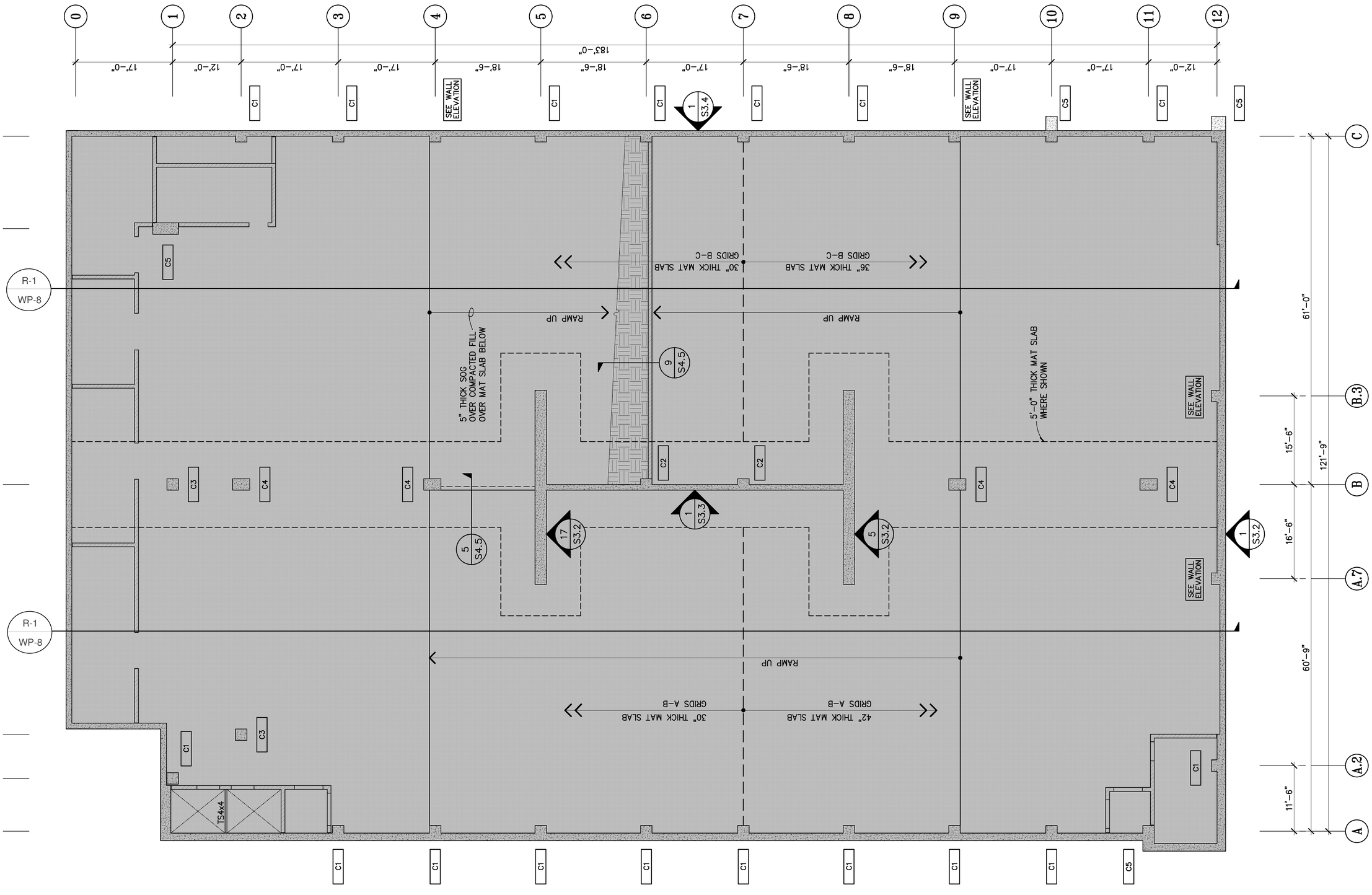


County of San Diego
Cedar & Kettner
Development Project
San Diego, California

McCARTHY
20401 S.W. BIRCH STREET SUITE 300
Newport Beach, California 92660

COURTNEY

| Revision | Date |
|---|---|
| 100% DESIGN DEVELOPMENT | 10/23/13 |
| 90% CDs - 1ST PLAN CHECK | 12/24/13 |

| | |
|---|---|
| Date | |
| IPD Job No. | 13-813 |
| Drawn By | |
| Checked By | |
| Scale | |

DESIGN
DEVELOPMENT

Drawing Title

Below Grade
Waterproofing
Under Mat Slab

Drawing No.

WP-1

IPD, Inc.

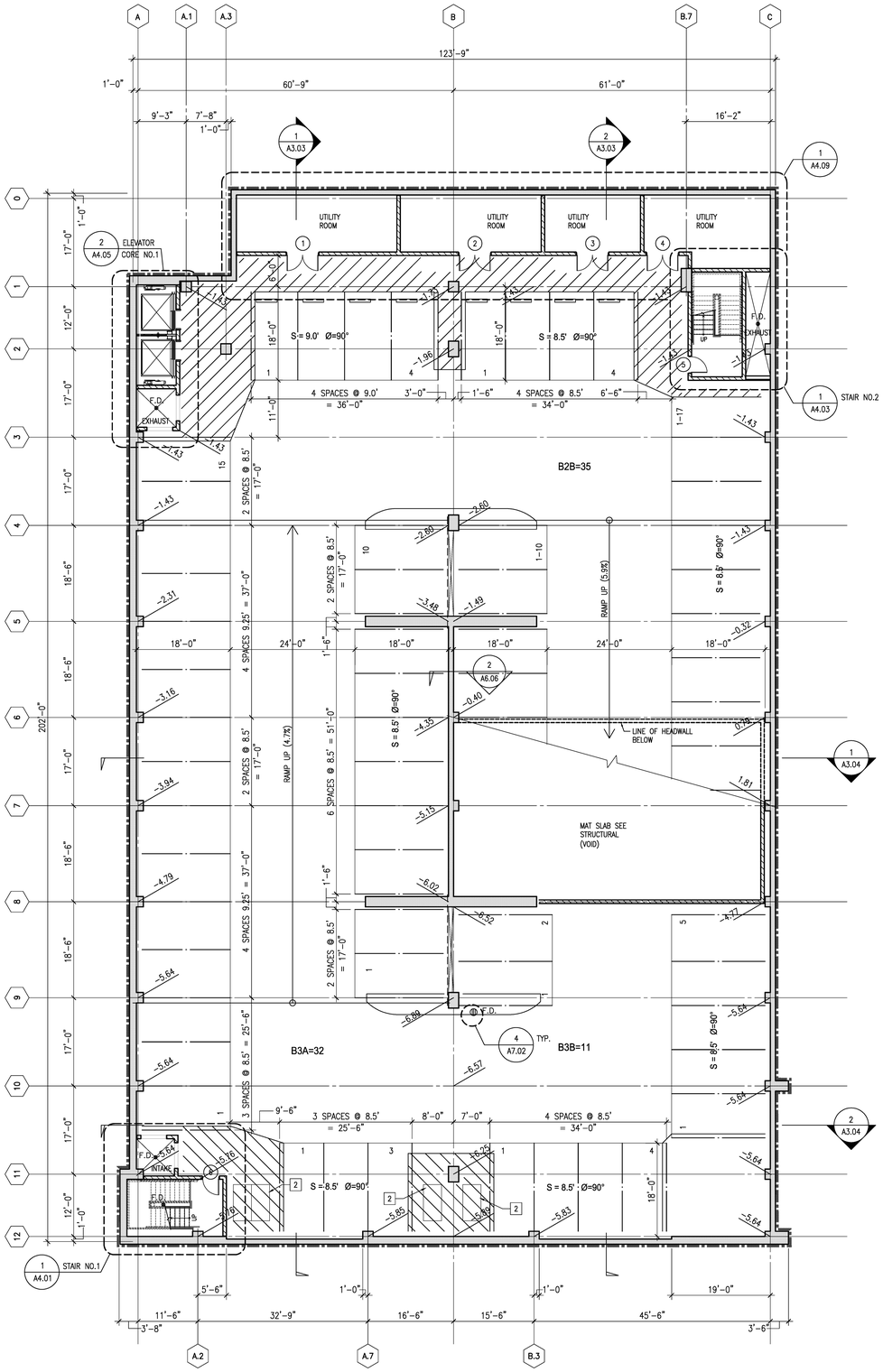


## B3 LEVEL FLOOR PLAN

SCALE: 3/32" = 1'-0"

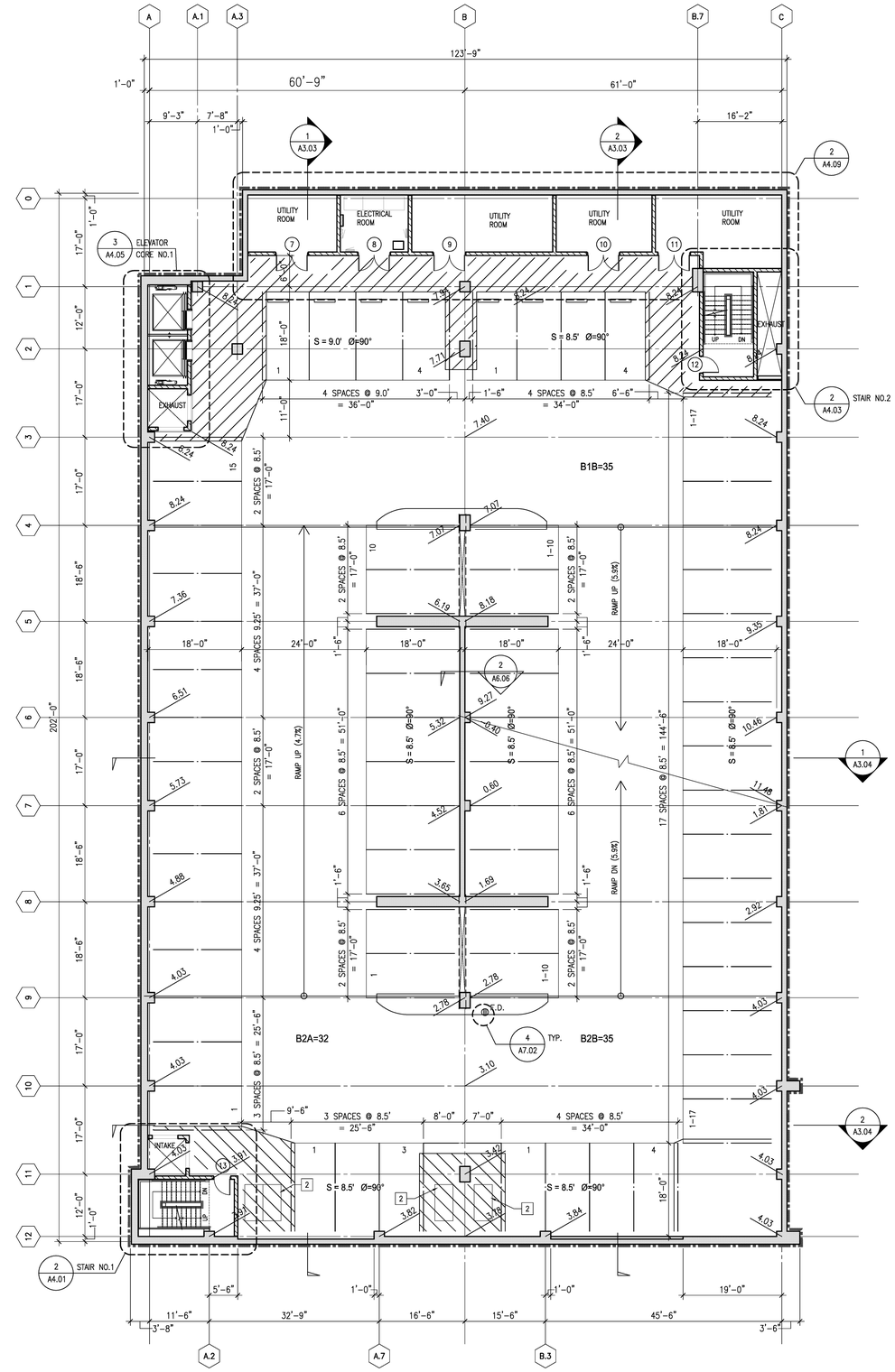


## B2 LEVEL FLOOR PLAN

SCALE: 3/32" = 1'-0"

Line indicates waterproofing. Reference sheet WP-8 and WP-9 for all applicable details

**County of San Diego**
**Cedar & Kettner**
**Development Project**
San Diego, California

McCARTHY

20401 S.W. BIRCH STREET SUITE 300
Newport Beach, California 92660

COURTNEY

| Revision | Date |
|---|---|
| 100% DESIGN DEVELOPMENT | 10/23/13 |
| 90% CDs - 1ST PLAN CHECK | 12/24/13 |

| | |
|---|---|
| Date | |
| IPD Job No. | 13-813 |
| Drawn By | |
| Checked By | |
| Scale | |

DESIGN DEVELOPMENT

Drawing Title

Below Grade Waterproofing Foundation Walls

Drawing No.

WP-2

IPD, Inc.

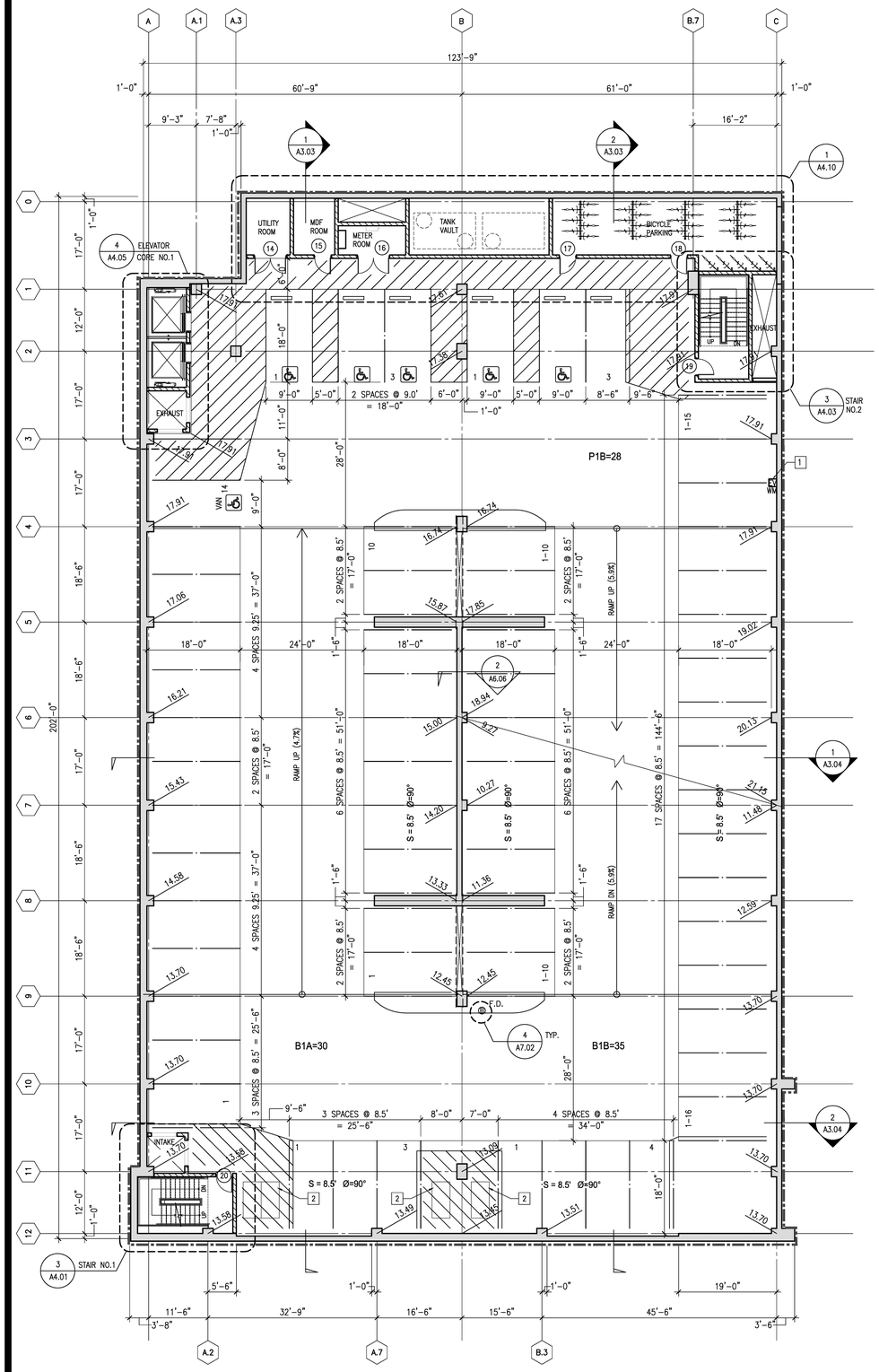


## B1 LEVEL FLOOR PLAN

SCALE: 3/32" = 1'-0"

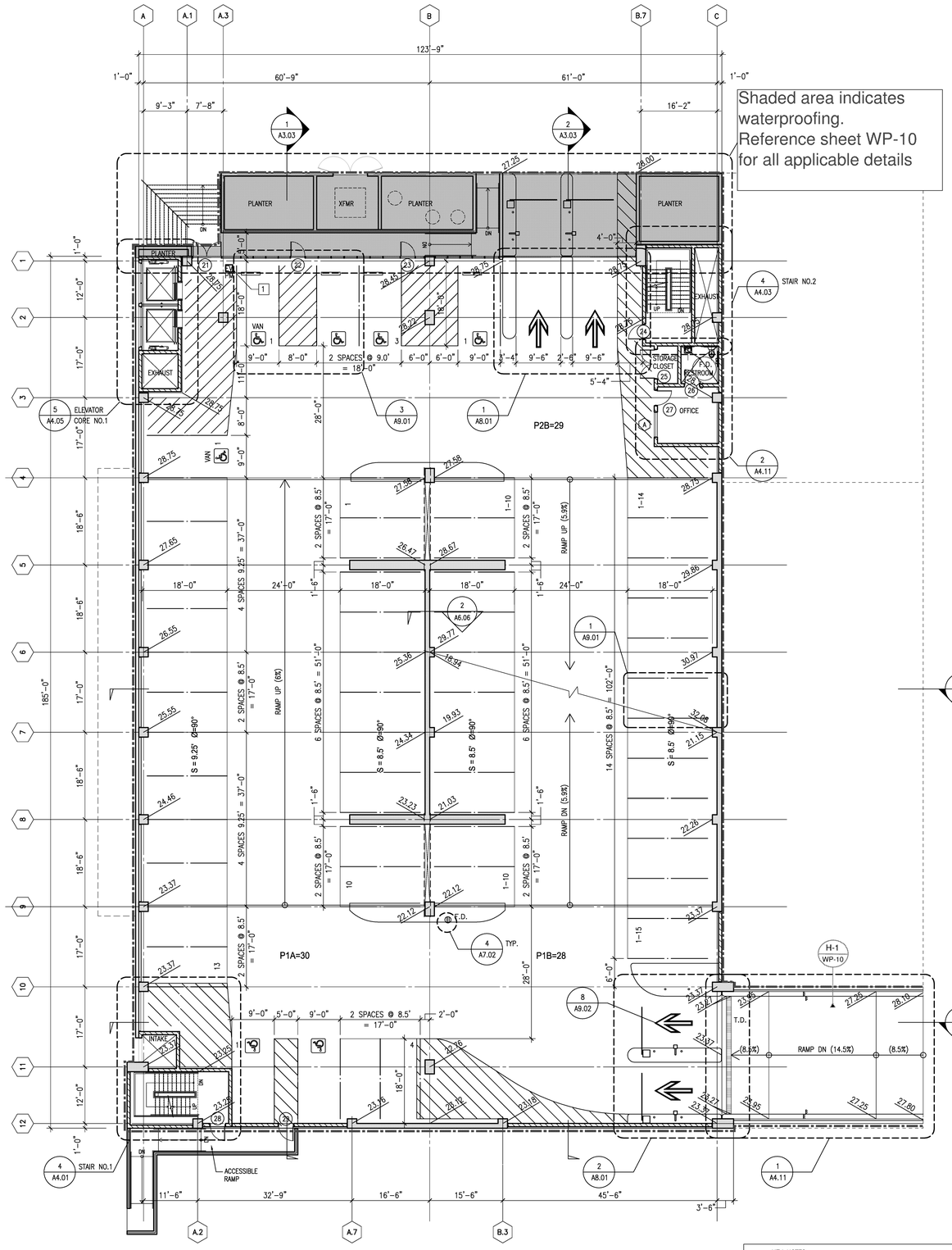


Shaded area indicates waterproofing. Reference sheet WP-10 for all applicable details

Line indicates waterproofing. Reference sheet WP-8 and WP-9 for all applicable details

KEY NOTES:

1. POWER PROVISIONS FOR ELECTRICAL VEHICLE CHARGING STATION (PEDESTAL MOUNT (PM) OR WALL MOUNT (WM))
2. MOTORCYCLE PARKING SPACE

## P1 GROUND LEVEL FLOOR PLAN

SCALE: 3/32" = 1'-0"

**County of San Diego**
**Cedar & Kettner**
**Development Project**
San Diego, California

McCARTHY

20401 S.W. BIRCH STREET SUITE 300
Newport Beach, California 92660

COURTNEY

| Revision | Date |
|---|---|
| 100% DESIGN DEVELOPMENT | 10/23/13 |
| 90% CDs - 1ST PLAN CHECK | 12/24/13 |

| | |
|---|---|
| Date | |
| IPD Job No. | 13-813 |
| Drawn By | |
| Checked By | |
| Scale | |

DESIGN DEVELOPMENT

Drawing Title

Below Grade Waterproofing Foundation Walls

Drawing No.

WP-3

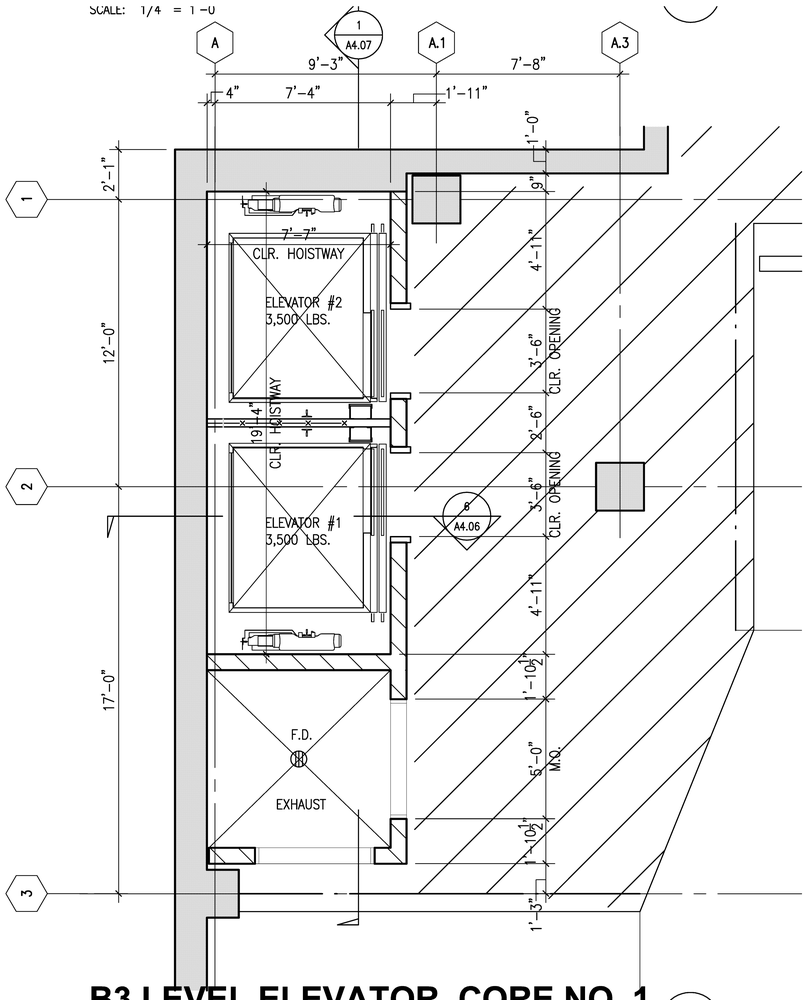


## B3 LEVEL ELEVATOR CORE NO .1

2

SCALE: 1/4" = 1'-0"

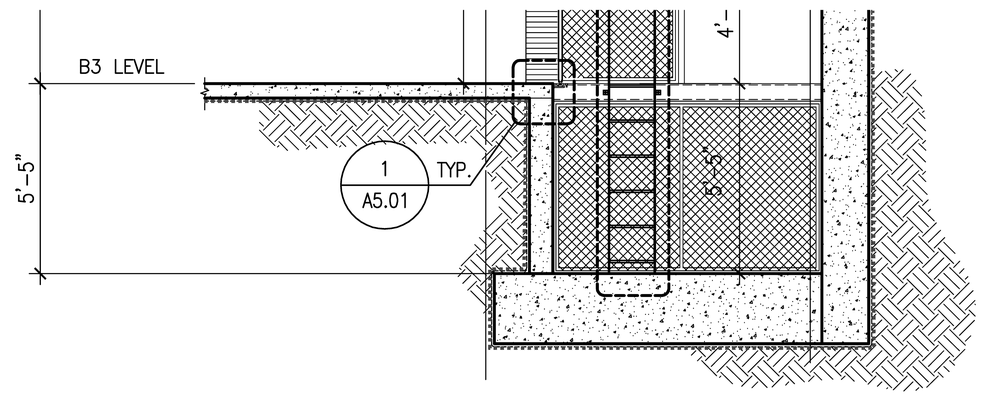


Line indicates waterproofing. Reference sheet WP-8 and WP-9 for all applicable details

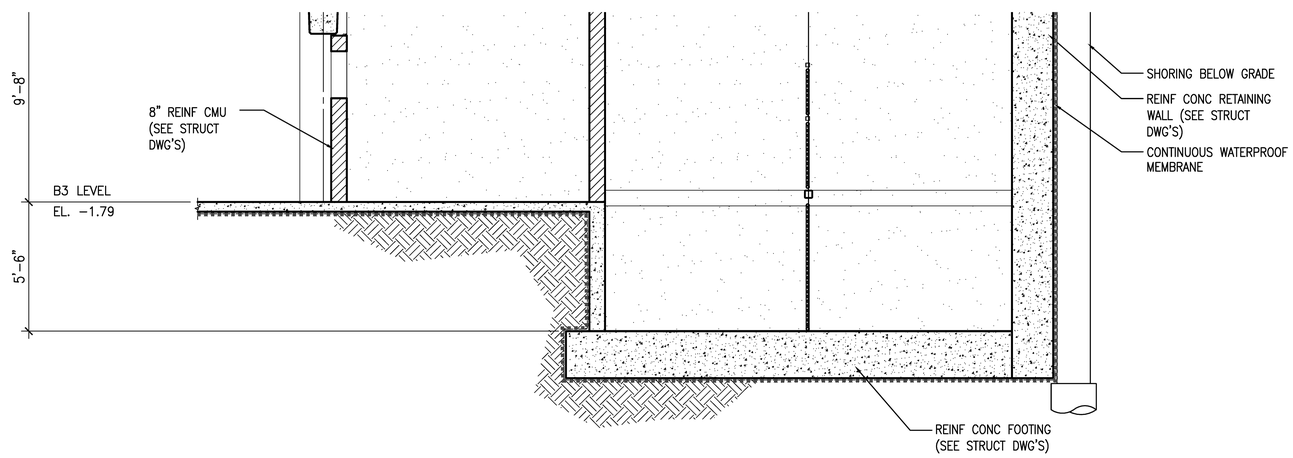


County of San Diego
Cedar & Kettner
Development Project
San Diego, California

McCARTHY

20401 S.W. BIRCH STREET SUITE 300
Newport Beach, California 92660

COURTNEY

| Revision | Date |
|---|---|
| 100% DESIGN DEVELOPMENT | 10/23/13 |
| 90% CDs - 1ST PLAN CHECK | 12/24/13 |

| | |
|---|---|
| Date | |
| IPD Job No. | 13-813 |
| Drawn By | |
| Checked By | |
| Scale | |

DESIGN DEVELOPMENT

Drawing Title

Below Grade
Waterproofing
Elevator and Sump Pits

Drawing No.

WP-3a

IPD, Inc.

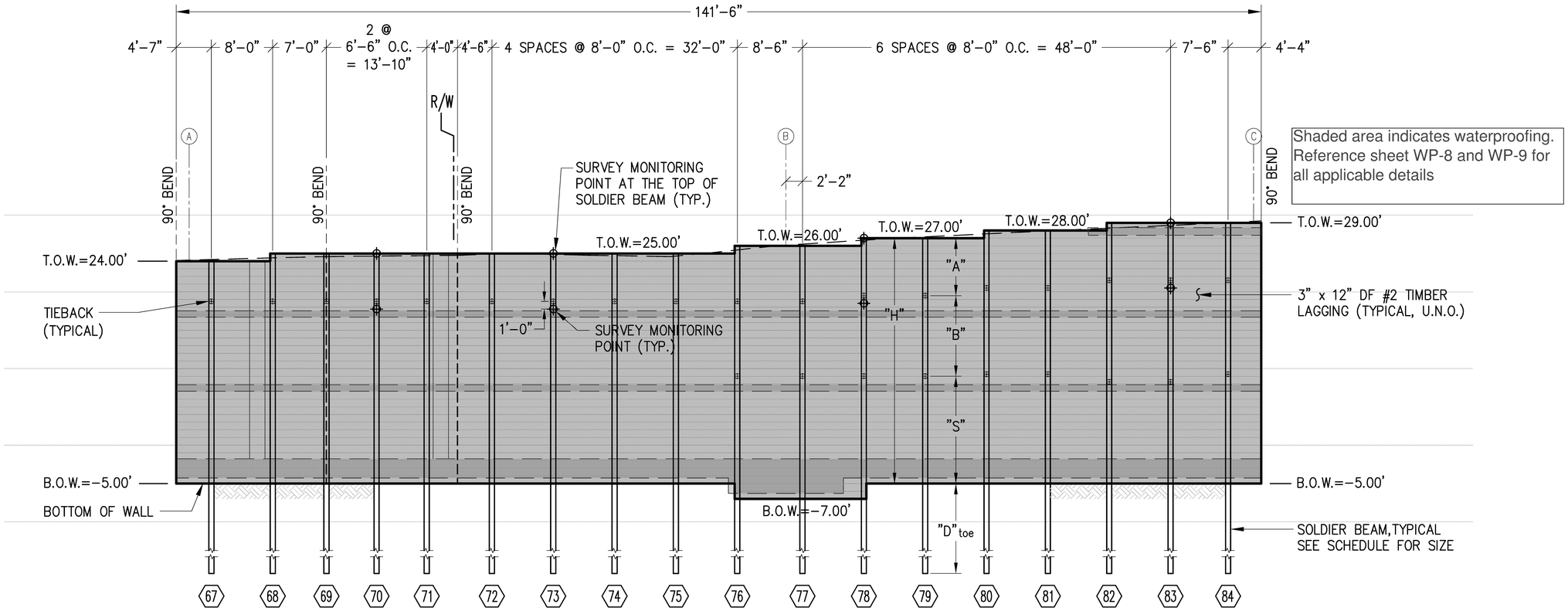


Shaded area indicates waterproofing. Reference sheet WP-8 and WP-9 for all applicable details

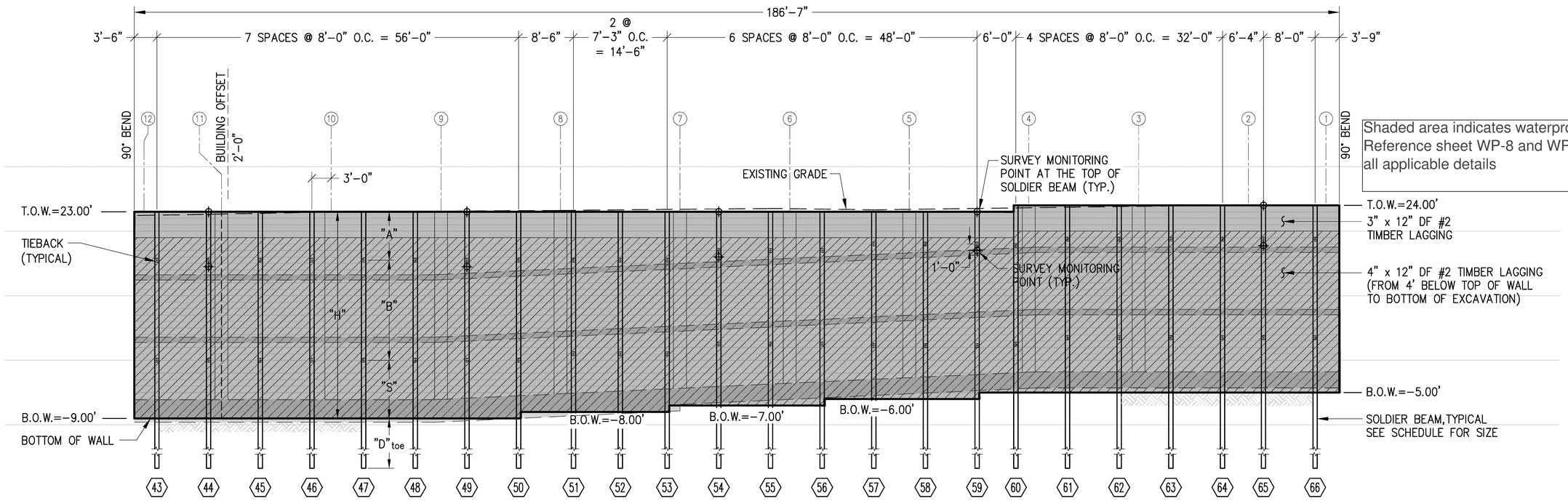


Shaded area indicates waterproofing. Reference sheet WP-8 and WP-9 for all applicable details

**County of San Diego**
**Cedar & Kettner**
**Development Project**
San Diego, California

McCARTHY
20401 S.W. BIRCH STREET SUITE 300
Newport Beach, California 92660

COURTNEY

| Revision | Date |
|---|---|
| 100% DESIGN DEVELOPMENT | 10/23/13 |
| 90% CDs - 1ST PLAN CHECK | 12/24/13 |

| | |
|---|---|
| Date | |
| IPD Job No. | 13-813 |
| Drawn By | |
| Checked By | |
| Scale | |

DESIGN DEVELOPMENT

Drawing Title

Below Grade Waterproofing Shored Foundation Walls

Drawing No.

WP-4

IPD, Inc.

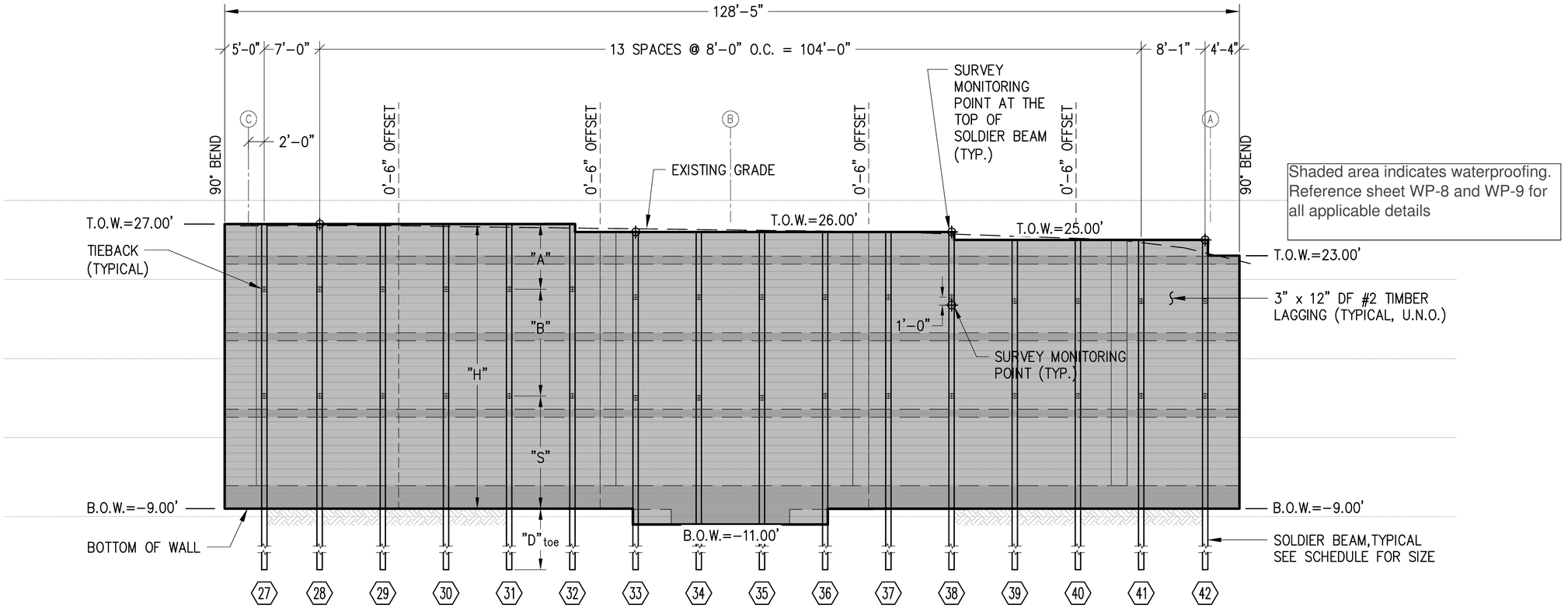


Shaded area indicates waterproofing. Reference sheet WP-8 and WP-9 for all applicable details

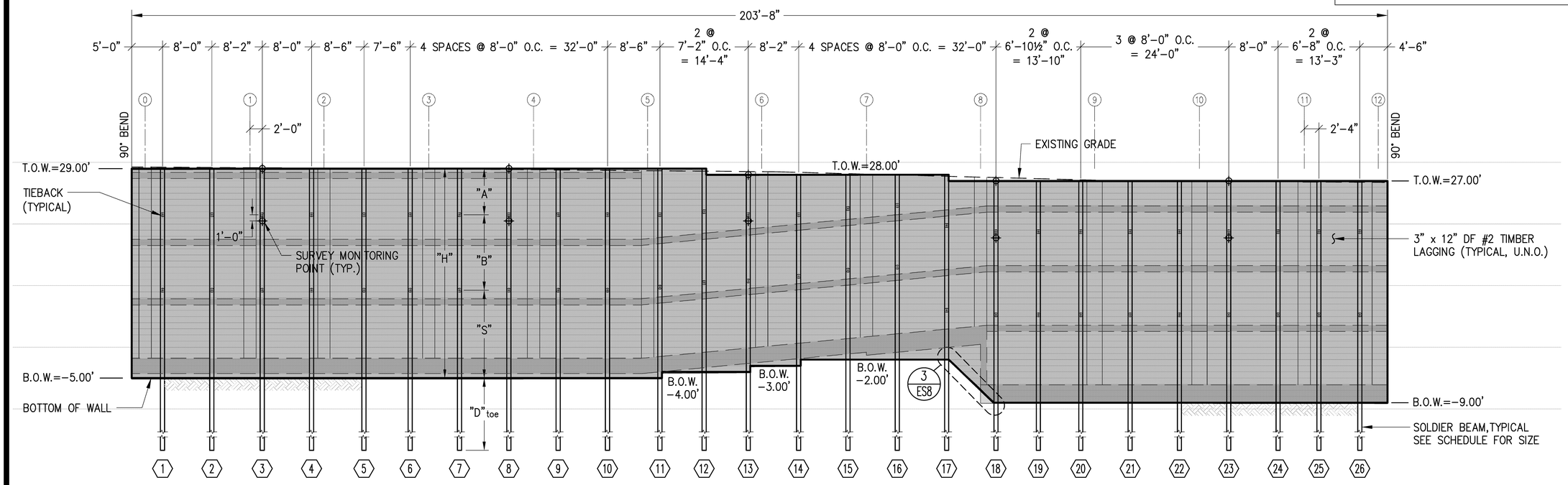


Shaded area indicates waterproofing. Reference sheet WP-8 and WP-9 for all applicable details

**County of San Diego Cedar & Kettner Development Project**
San Diego, California

McCARTHY
20401 S.W. BIRCH STREET SUITE 300
Newport Beach, California 92660

COURTNEY

| Revision | Date |
|---|---|
| 100% DESIGN DEVELOPMENT | 10/23/13 |
| 90% CDs - 1ST PLAN CHECK | 12/24/13 |

| | |
|---|---|
| Date | |
| IPD Job No. | 13-813 |
| Drawn By | |
| Checked By | |
| Scale | |

DESIGN DEVELOPMENT

Drawing Title

Below Grade Waterproofing Shored Foundation Walls

Drawing No.

WP-5

IPD, Inc.

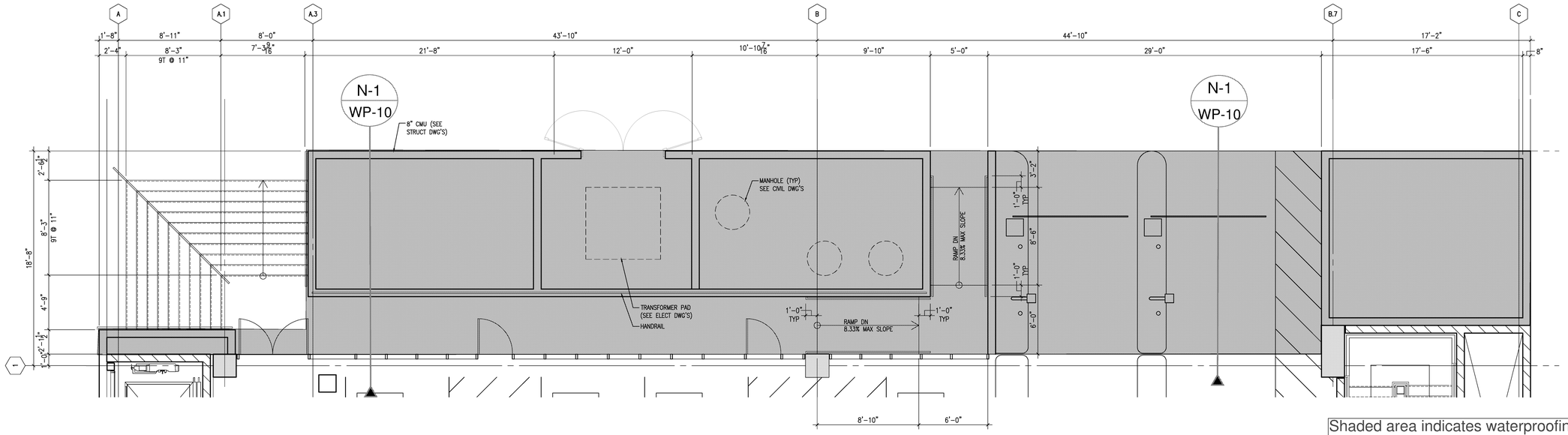


Shaded area indicates waterproofing.
Reference sheet WP-10 for
all applicable details

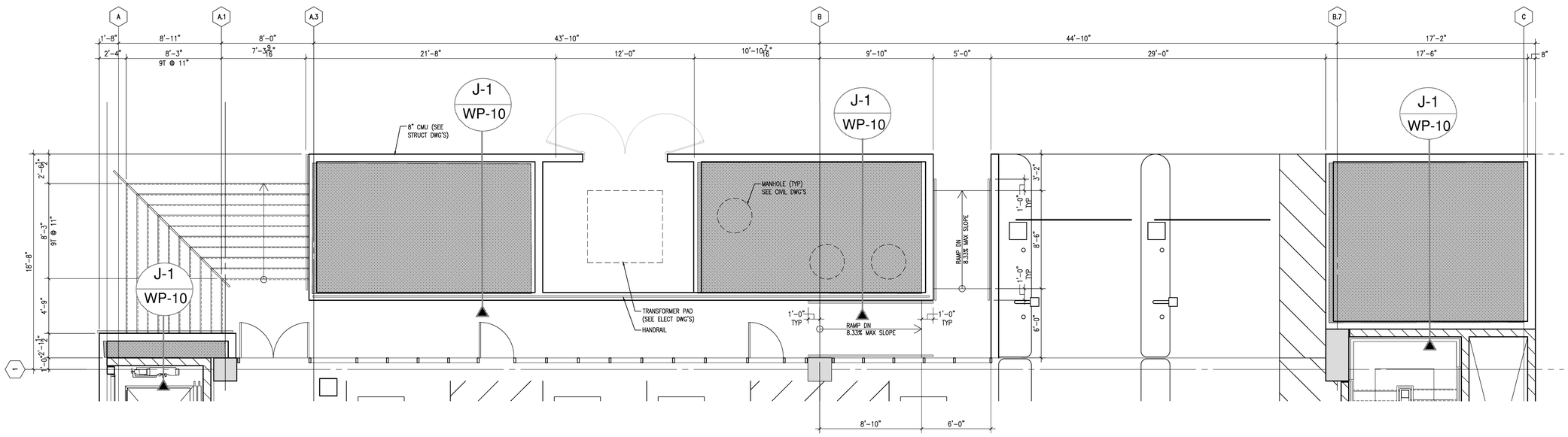


Shaded area indicates Planter waterproofing.
Reference sheet WP-10 for
all applicable details

**County of San Diego**
**Cedar & Kettner**
**Development Project**
San Diego, California

McCARTHY

20401 S.W. BIRCH STREET SUITE 300
Newport Beach, California 92660

COURTNEY

| Revision | Date |
|---|---|
| 100% DESIGN DEVELOPMENT | 10/23/13 |
| 90% CDs - 1ST PLAN CHECK | 12/24/13 |

| | |
|---|---|
| Date | |
| IPD Job No. | 13-813 |
| Drawn By | |
| Checked By | |
| Scale | |

DESIGN DEVELOPMENT

Drawing Title

Below Grade Waterproofing
Horizontal Deck / Planters

Drawing No.

WP-6

IPD, Inc.

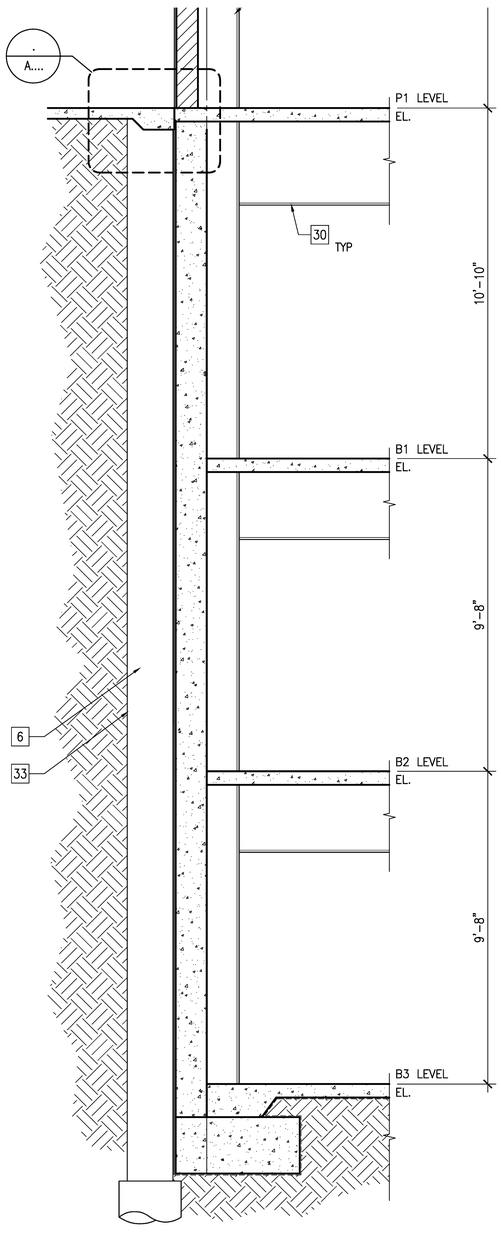


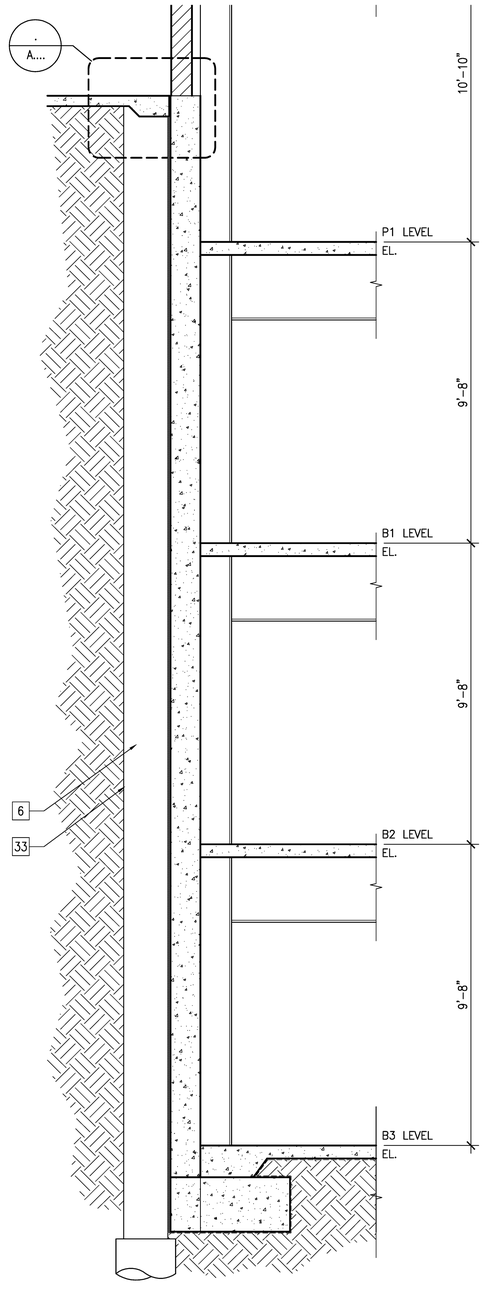


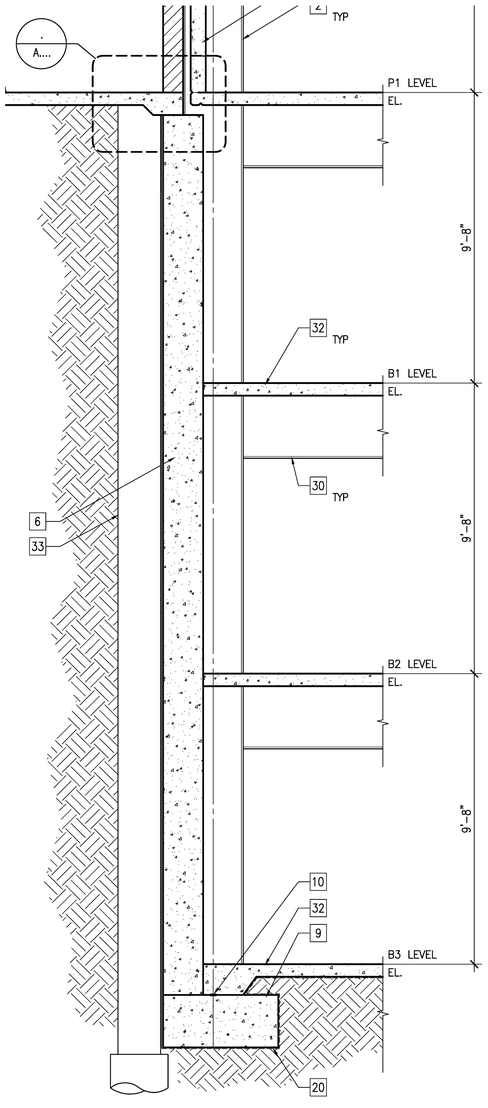


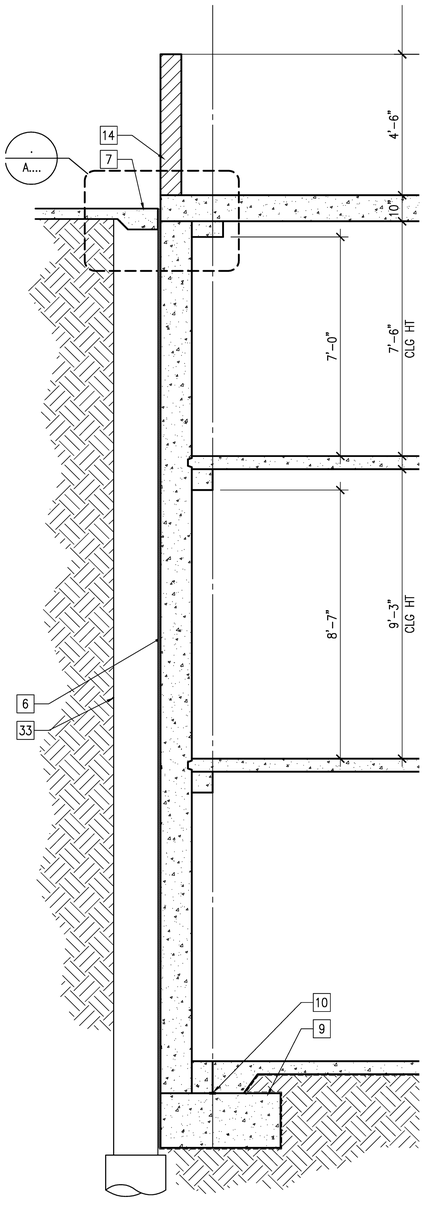


Line indicates waterproofing. Reference sheet WP-8 and WP-9 for all applicable details

**County of San Diego**
**Cedar & Kettner**
**Development Project**
San Diego, California

McCARTHY

20401 S.W. BIRCH STREET SUITE 300
Newport Beach, California 92660

COURTNEY

| Revision | Date |
|---|---|
| 100% DESIGN DEVELOPMENT | 10/23/13 |
| 90% CDs - 1ST PLAN CHECK | 12/24/13 |

| | |
|---|---|
| Date | |
| IPD Job No. | 13-813 |
| Drawn By | |
| Checked By | |
| Scale | |

DESIGN DEVELOPMENT

Drawing Title

Below Grade Waterproofing Wall Sections

Drawing No.

WP-7

IPD, Inc.

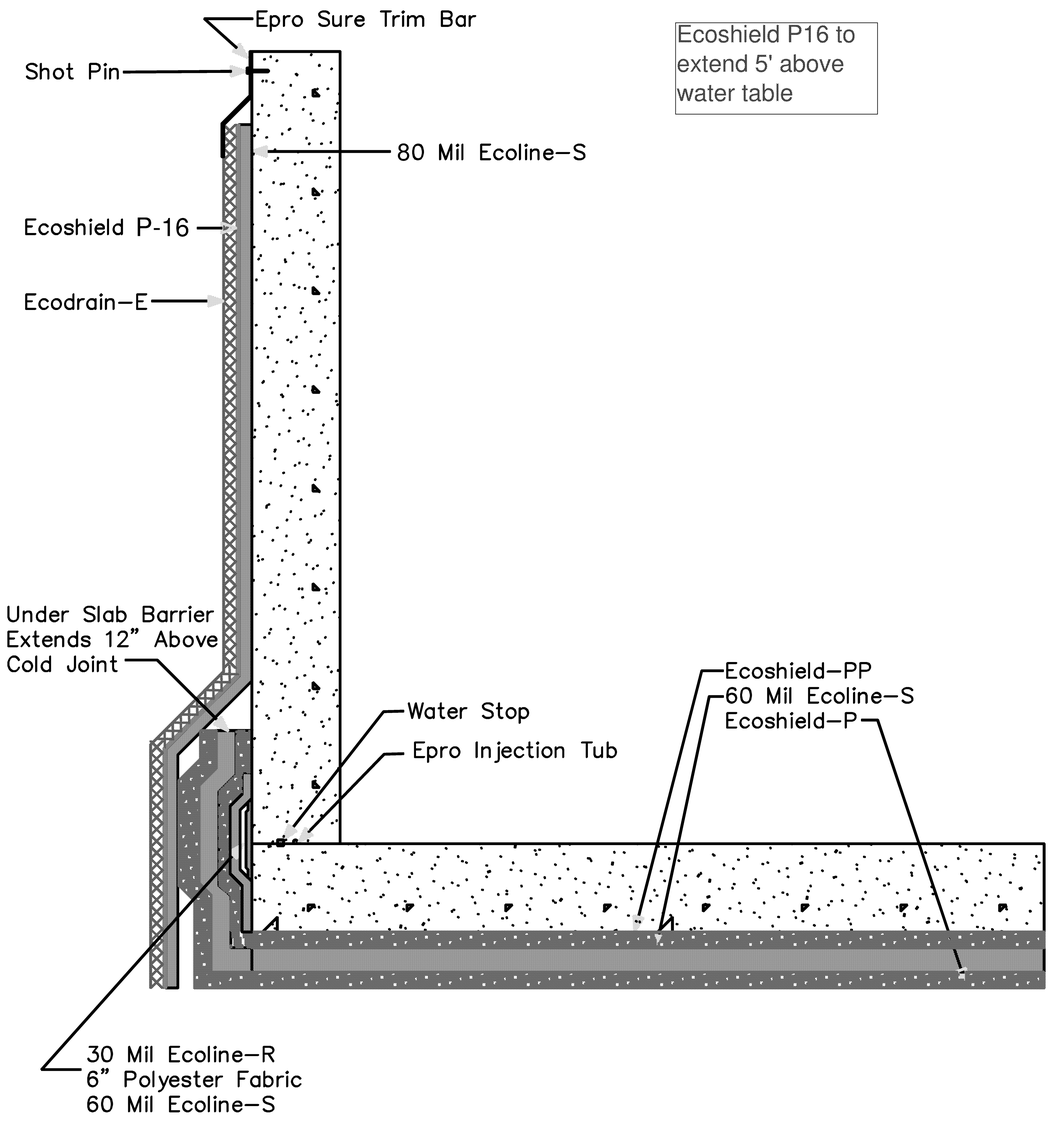


Ecoshield P16 to extend 5' above water table

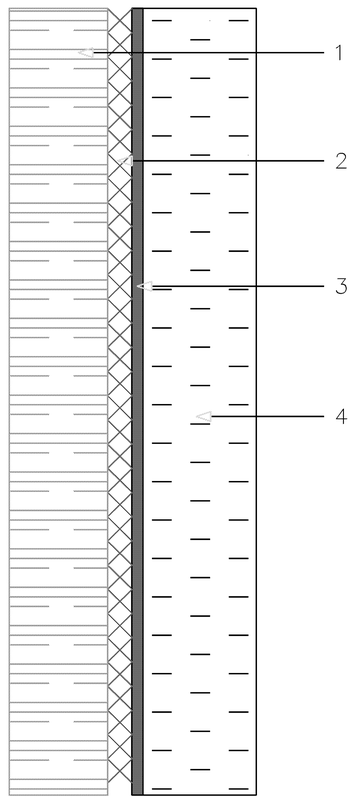


1. Lagging Wall
2. Ecodrain–E
3. Ecoline–S or Ecoline–R
4. Shotcrete Wall

| RETAINING WALL AND SLAB DETAIL | epro Waterproofing Systems | R–1 |
|---|---|---|

| BLINDSIDE/LAGGING WALL TYPICAL CROSS SECTION | epro Waterproofing Systems | B–1 |
|---|---|---|

County of San Diego
Cedar & Kettner
Development Project
San Diego, California

McCARTHY
20401 S.W. BIRCH STREET SUITE 300
Newport Beach, California 92660

COURTNEY

| Revision | Date |
|---|---|
| 100% DESIGN DEVELOPMENT | 10/23/13 |
| 90% CDs - 1ST PLAN CHECK | 12/24/13 |

| | |
|---|---|
| Date | |
| IPD Job No. | 13-813 |
| Drawn By | |
| Checked By | |
| Scale | |

DESIGN DEVELOPMENT

Drawing Title
Below Grade Waterproofing Details

Drawing No.
WP-8

IPD, Inc.

1. Soil
2. Lagging
3. Ecodrain–E
4. Nylon or Polypropylene cinch tie
5. Pipe
6. Ecoline–R
7. Ecoline–S (45 degree cant.)
8. Ecoline–S (80–mil)

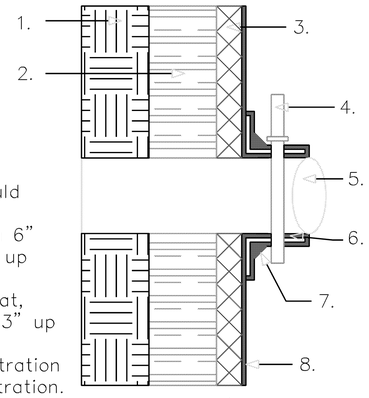


A. Trim the Ecodrain to within 1/8" of the penetration (should be as snug as possible).
B. Apply a 30–mil base coat of Ecoline–S or Ecoline–R in a 6" radius on the Ecodrain–E, around the penetration and 6" up the penetrating object.
C. Embed 6" polyester reinforcement fabric into the base coat, wrapping it around the penetration 3" onto the field and 3" up the penetration.
D. Apply a minimum 60–mil coat around and onto the penetration while creating a 45 degree cant at the base of the penetration.
E. Secure the membrane and reinforcement fabric with a nylon or polypropylene cinch tie.

| LAGGING WALL DETAIL PENETRATION | epro Waterproofing Systems — A WORLD OF DIFFERENCE FOR REAL WORLD CONDITIONS | LW–4 |
|---|---|---|

1. Ecodrain–E
2. 30–mil Ecoline–S or Ecoline–R
3. Polyester reinforcement fabric
4. 30–mil Ecoline–S or Ecoline–R

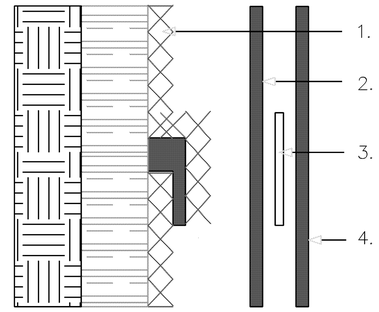


A. Apply a 30–mil coat of Ecoline–S or Ecoline–R 6" to either side of the overlap seam.
B. Embed a 6" strip of reinforcement fabric into the seam, extending out 3" on either side of the seam.
C. Apply a second 30–mil coat of Ecoline–S or Ecoline–R over the polyester reinforcement fabric

| LAGGING WALL DETAIL OVERLAP 2 | epro Waterproofing Systems — A WORLD OF DIFFERENCE FOR REAL WORLD CONDITIONS | LW–1 |
|---|---|---|

1. Soil
2. Soldier Beam
3. Ecodrain–E
4. Nylon or Polypropylene cinch tie
5. Reinforcement fabric
6. Tie Back Rod
7. Ecoline–S

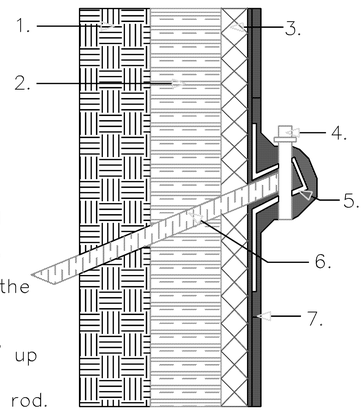


A. Trim the Ecodrain to within 1/8" of the tie back rod (should be as snug as possible).
B. Apply a 30–mil base coat of Ecoline–S or Ecoline–R in a 6" radius on the Ecodrain–E around the tie back rod and over the object.
C. Embed 6" polyester reinforcement fabric into the base coat, wrapping it around the tie back rod 3" onto the field and 3" up the tie back rod.
D. Apply a minimum 80–mil coat around and onto the tie back rod.
E. Secure the membrane and reinforcement fabric with a nylon or polypropylene cinch tie.

| LAGGING WALL DETAIL TIE BACK | epro Waterproofing Systems — A WORLD OF DIFFERENCE FOR REAL WORLD CONDITIONS | LW–5 |
|---|---|---|

1. Soil
2. Lagging
3. Ecodrain–E
4. Ecoline–S (80–mil)
5. Soldier Beam
7. Shot crete Wall

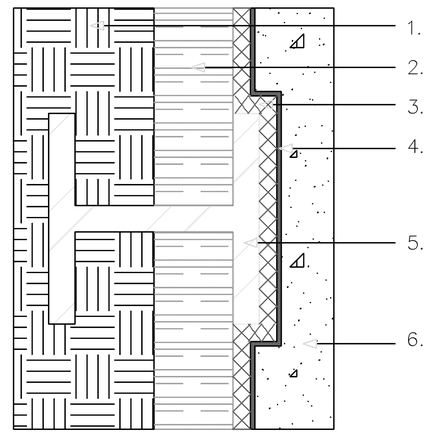


A. Extand Ecodrain–E over the soldier beam and lagging wall attaching it to the lagging.
B. Treat the overlaps per the overlap details.

| LAGGING WALL DETAIL EXTERIOR SOLDIER BEAM | epro Waterproofing Systems — A WORLD OF DIFFERENCE FOR REAL WORLD CONDITIONS | LW–2 |
|---|---|---|

County of San Diego
Cedar & Kettner
Development Project
San Diego, California

McCARTHY
20401 S.W. BIRCH STREET SUITE 300
Newport Beach, California 92660

COURTNEY

| Revision | Date |
|---|---|
| 100% DESIGN DEVELOPMENT | 10/23/13 |
| 90% CDs - 1ST PLAN CHECK | 12/24/13 |

| | |
|---|---|
| Date | |
| IPD Job No. | 13-813 |
| Drawn By | |
| Checked By | |
| Scale | |

DESIGN DEVELOPMENT

Drawing Title
Below Grade Waterproofing Details

Drawing No.
WP-9

IPD, Inc.

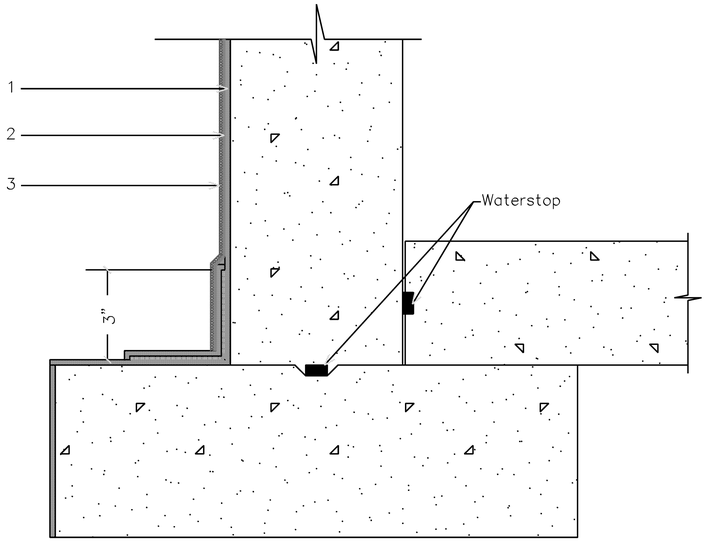


1. 60 Mil Ecoline–S or R
2. Ecoshield–E 10
3, Ecodrain–E or S

| FOUNDATION WALLS | epro Waterproofing Systems | H–1 |
|---|---|---|

1. Ecoline–S (60–mil)
2. Concrete or block wall
3. Concrete slab
4. Termination bar
5. Ecodrain–E
6. Lagging wall
7. Shotcrete wall

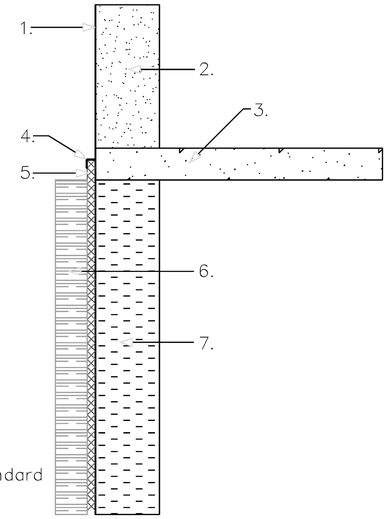


A. Install System III LW 6" above lagging wall.
B. After slab is poured, trim System III LW to 3" Above the bottom of the slab.
C. Apply a 30–mil coat of Ecoline–R in 3" area
D. Attach System III LW with permanent termination bar
E. Coat 3" on both sides of termination seem with 30–mil Ecoline–R
F. Install 6" polyester reinforcement fabric overseam.
G. Apply 30–mil coat Ecoline–R over polyester.
H. Continue 60–mil Ecoline–S up slab and/or wall per standard application spec, including cold joint details

| LAGGING WALL DETAIL TERMINATION AT GRADE | epro Waterproofing Systems | LW–10 |
|---|---|---|

1. Concrete
2. Ecoline–S/Ecoline–R (60 Mils)
3. Polyester Reinforcement Fabric
4. Ecoline–S/Ecoline–R (60 Mils)
5. Ecoshield–E
6. Ecodrain–E or Ecodrain–S
7. Paving

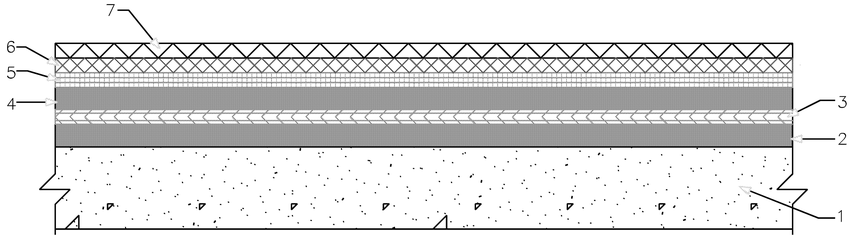


| CONCRETE PLAZA DECKS FOR PERVIOUS PAVING | epro Waterproofing Systems | N–1 |
|---|---|---|

1. Ecoline–S or Ecoline–R (60 Mils)
2. Ecoshield
3. Ecodraine/Sand or Gravel/Ecodraine–E and Sand or Gravel
4. Planting Soil
5. Planter

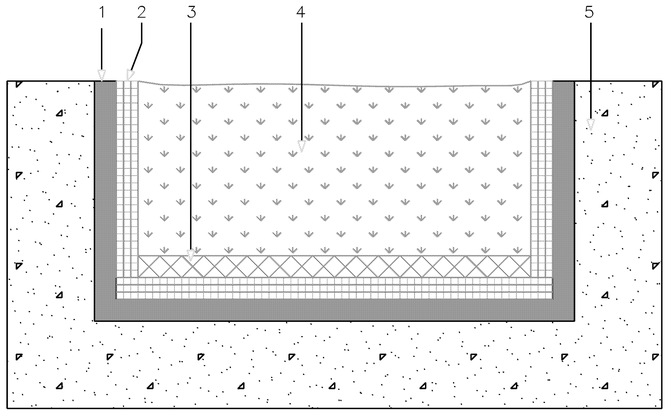


| PLANTERS–CONCRETE AND CONCRETE MASONRY | epro Waterproofing Systems | J–1 |
|---|---|---|

County of San Diego
Cedar & Kettner
Development Project
San Diego, California

McCARTHY
20401 S.W. BIRCH STREET SUITE 300
Newport Beach, California 92660

COURTNEY

| Revision | Date |
|---|---|
| 100% DESIGN DEVELOPMENT | 10/23/13 |
| 90% CDs - 1ST PLAN CHECK | 12/24/13 |

| | |
|---|---|
| Date | |
| IPD Job No. | 13-813 |
| Drawn By | |
| Checked By | |
| Scale | |

DESIGN DEVELOPMENT

Drawing Title
Below Grade Waterproofing Details

Drawing No.
WP-10

IPD, Inc.

# FIRE PROTECTION PLAN FOR : CEDAR & KETTNER PARKING STRUCTURE

## 735 W. CEDAR ST. SAN DIEGO, CA. 92101

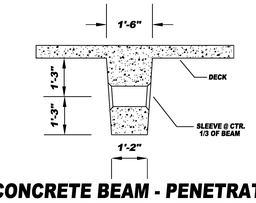


**CONCRETE BEAM - PENETRATION**

TYPICAL (N.T.S.)

**PIPE CLEARANCE NOTE :**
6" STANDPIPE TO HAVE A 10" SLEEVE

**FLEX COUPLING**
FLEX COUP. TO BE INSTALLED WITHIN 12" ABOVE AND 24" BELOW EACH FLOOR PENETRATION AND AT TOP OF EACH SYSTEM RISER

**4-WAY BRACING**
VERTICAL STANDPIPE BRACING SHALL BE INSTALLED PER N.F.P.A. 13 '10 ED. - 9.2.5.5

## PLAN INDEX


| SHEET NO. | AREA DESCRIPTION OR ZONE |
|---|---|
| FP 1 of 7 | COVER SHEET & DETAILS |
| FP 2 of 7 | B3 & B2 LEVEL - FIRE SPRINKLER PLAN |
| FP 3 of 7 | B1 & P1 LEVEL - FIRE SPRINKLER & STANDPIPE PLAN |
| FP 4 of 7 | P2 & P3 LEVEL - STANDPIPE PLAN |
| FP 5 of 7 | P4 & P5 LEVEL - STANDPIPE PLAN |
| FP 6 of 7 | P6 & P7 LEVEL - STANDPIPE PLAN |
| FP 7 of 7 | GARAGE SECTIONS |


| Brace Information | | Seismic Brace Attachments | |
|---|---|---|---|
| Length of brace: | 7'-0" | Structure attachment fitting or tension-only bracing system: Make: TOLCO Model: 980 | |
| Diameter of brace: | 1" | Listed load rating: 2015 Adjusted load rating per 9.3.5.10.3: | 1425 |
| Type of brace: | Schedule 40 | Sway brace (pipe attachment) fitting: Make: TOLCO Model: 1001 | |
| Angle of brace: | 45° to 59° | Listed load rating: 2015 Adjusted load rating per 9.3.5.10.3: | 1425 |
| Least radius of gyration:* | 0.42 | Make: Model: | |
| L/R value:* | 200 | Listed load rating: Adjusted load rating per 9.3.5.10.3: | |
| Maximum horizontal load: | 1310 | | |

Seismic Brace Assembly Detail

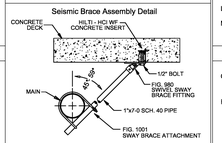


Lateral brace

| Fastener Information | |
|---|---|
| Orientation of connecting surface: | "B" |
| Fastener: | |
| Type: | HILTI - HCI WF INSERT |
| Diameter: | 1/2" |
| Embedment (Concrete): | 2" |
| Maximum load: | 713 |

Brace identification no. (to be used on plans) SB1

☒ Lateral brace ☐ Longitudinal brace

Sprinkler System Load Calculation [Fp = 0.73 Wp (default is 0.73)]

| Diameter | Type | Total (ft) | Weight per ft | Wp | Total Weight |
|---|---|---|---|---|---|
| 4" | SCH. 10 | 40' | 11.78 | 0.73 | 343.97 |
| 2" | SCH. 40 | 30' | 5.13 | 0.73 | 112.36 |
| 1-1/5" | SCH. 40 | 30' | 3.61 | 0.73 | 79.05 |
| | | | Total weight | | 535.38 |
| | | | Fp x 1.15 | | 615.68 |

**4" SWAY BRACE CALCULATIONS -**
**LATERAL** **HILTI - HCI WF INSERT**

| Brace Information | | Seismic Brace Attachments | |
|---|---|---|---|
| Length of brace: | 7'-0" | Structure attachment fitting or tension-only bracing system: Make: TOLCO Model: 980 | |
| Diameter of brace: | 1" | Listed load rating: 2015 Adjusted load rating per 9.3.5.10.3: | 1425 |
| Type of brace: | Schedule 40 | Sway brace (pipe attachment) fitting: Make: TOLCO Model: 4A | |
| Angle of brace: | 45° to 59° | Listed load rating: 2015 Adjusted load rating per 9.3.5.10.3: | 1425 |
| Least radius of gyration:* | 0.42 | Make: Model: | |
| L/R value:* | 200 | Listed load rating: Adjusted load rating per 9.3.5.10.3: | |
| Maximum horizontal load: | 1310 | | |

Seismic Brace Assembly Detail

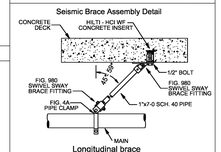


Longitudinal brace

| Fastener Information | |
|---|---|
| Orientation of connecting surface: | "B" |
| Fastener: | |
| Type: | HILTI - HCI WF INSERT |
| Diameter: | 1/2" |
| Embedment (Concrete): | 2" |
| Maximum load: | 713 |

Brace identification no. (to be used on plans) SB2

☐ Lateral brace ☒ Longitudinal brace

Sprinkler System Load Calculation [Fp = 0.73 Wp (default is 0.73)]

| Diameter | Type | Total (ft) | Weight per ft | Wp | Total Weight |
|---|---|---|---|---|---|
| 4" | SCH. 10 | 70' | 11.78 | .73 | 601.96 |
| | | | Total weight | | 601.96 |
| | | | Fp x 1.15 | | 692.25 |

**4" SWAY BRACE CALCULATIONS -**
**LONGITUDINAL** **HILTI - HCI WF INSERT**

| Brace Information | | Seismic Brace Attachments | |
|---|---|---|---|
| Length of brace: | 7'-0" | Structure attachment fitting or tension-only bracing system: Make: TOLCO Model: 980 | |
| Diameter of brace: | 1" | Listed load rating: 2015 Adjusted load rating per 9.3.5.10.3: | 1425 |
| Type of brace: | Schedule 40 | Sway brace (pipe attachment) fitting: Make: TOLCO Model: 1001 | |
| Angle of brace: | 45° to 59° | Listed load rating: 2015 Adjusted load rating per 9.3.5.10.3: | 1425 |
| Least radius of gyration:* | 0.42 | Make: Model: | |
| L/R value:* | 200 | Listed load rating: Adjusted load rating per 9.3.5.10.3: | |
| Maximum horizontal load: | 1310 | | |

Seismic Brace Assembly Detail

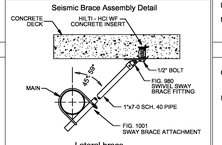


Lateral brace

| Fastener Information | |
|---|---|
| Orientation of connecting surface: | "B" |
| Fastener: | |
| Type: | HILTI - HCI WF INSERT |
| Diameter: | 1/2" |
| Embedment (Concrete): | 2" |
| Maximum load: | 713 |

Brace identification no. (to be used on plans) SB1

☒ Lateral brace ☐ Longitudinal brace

Sprinkler System Load Calculation [Fp = 0.73 Wp (default is 0.73)]

| Diameter | Type | Total (ft) | Weight per ft | Wp | Total Weight |
|---|---|---|---|---|---|
| 6" | SCH. 10 | 38' | 23.03 | 0.73 | 568.41 |
| | | | Total weight | | 568.41 |
| | | | Fp x 1.15 | | 676.67 |

**6" SWAY BRACE CALCULATIONS -**
**LATERAL** **HILTI - HCI WF INSERT**

| Brace Information | | Seismic Brace Attachments | |
|---|---|---|---|
| Length of brace: | 7'-0" | Structure attachment fitting or tension-only bracing system: Make: TOLCO Model: 980 | |
| Diameter of brace: | 1" | Listed load rating: 2015 Adjusted load rating per 9.3.5.10.3: | 1425 |
| Type of brace: | Schedule 40 | Sway brace (pipe attachment) fitting: Make: TOLCO Model: 4A | |
| Angle of brace: | 45° to 59° | Listed load rating: 2015 Adjusted load rating per 9.3.5.10.3: | 1425 |
| Least radius of gyration:* | 0.42 | Make: Model: | |
| L/R value:* | 200 | Listed load rating: Adjusted load rating per 9.3.5.10.3: | |
| Maximum horizontal load: | 1310 | | |

Seismic Brace Assembly Detail

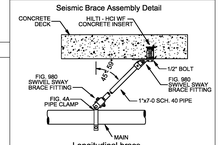


Longitudinal brace

| Fastener Information | |
|---|---|
| Orientation of connecting surface: | "B" |
| Fastener: | |
| Type: | HILTI - HCI WF INSERT |
| Diameter: | 1/2" |
| Embedment (Concrete): | 2" |
| Maximum load: | 713 |

Brace identification no. (to be used on plans) SB2

☐ Lateral brace ☒ Longitudinal brace

Sprinkler System Load Calculation [Fp = 0.73 Wp (default is 0.73)]

| Diameter | Type | Total (ft) | Weight per ft | Wp | Total Weight |
|---|---|---|---|---|---|
| 6" | SCH. 10 | 38' | 23.03 | .73 | 568.41 |
| | | | Total weight | | 568.41 |
| | | | Fp x 1.15 | | 676.67 |

**6" SWAY BRACE CALCULATIONS -**
**LONGITUDINAL** **HILTI - HCI WF INSERT**

**SEISMIC COEFFICIENT TABLE**
TABLE 9.3.5.6.2 NFPA '10

| Ss | | Cp | |
|---|---|---|---|
| .33 OR LESS | | 0.35 | |
| 0.40 | | 0.38 | |
| 0.50 | | 0.40 | |
| 0.60 | | 0.42 | |
| 0.70 | | 0.42 | |
| 0.75 | | 0.42 | |
| 0.80 | | 0.44 | |
| 0.90 | | 0.48 | |
| 0.95 | | 0.50 | |
| 1.00 | | 0.51 | |
| 1.10 | | 0.54 | |
| 1.20 | | 0.57 | |
| 1.25 | | 0.58 | |
| 1.30 | | 0.61 | |
| 1.40 | | 0.65 | |
| 1.50 | (1.55) | (0.73) 0.70 | PER USGS |
| 1.60 | | 0.76 | |
| 1.70 | | 0.79 | |
| 1.75 | | 0.82 | |
| 1.80 | | 0.84 | |
| 1.90 | | 0.89 | |
| 2.00 | | 0.93 | |
| 2.10 | | 0.98 | |

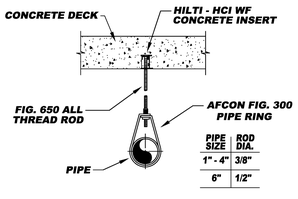


| PIPE SIZE | ROD DIA. |
|---|---|
| 1" - 4" | 3/8" |
| 6" | 1/2" |

**CONCRETE INSERT & HANGER DETAIL = /**
N.T.S.

**BRACING NOTES:**
1) ALL MAINS SUPPORTED BY RODS LESS THAN 6" SHALL NOT REQUIRE LATERAL BRACING OR CALCULATIONS. (PER N.F.P.A. 13 '10 ED. SEC. 9.3.5.3.9)

| MAXIMUM DISTANCE BETWEEN HANGERS | | | | | | | | |
|---|---|---|---|---|---|---|---|---|
| NOMINAL PIPE SIZE (in.) | 1" | 1-1/4" | 1-1/2" | 2" | 3" | 4" | 6" | 8" |
| STEEL | 12'-0" | 12'-0" | 15'-0" | 15'-0" | 15'-0" | 10'-0" | 10'-0" | 10'-0" |

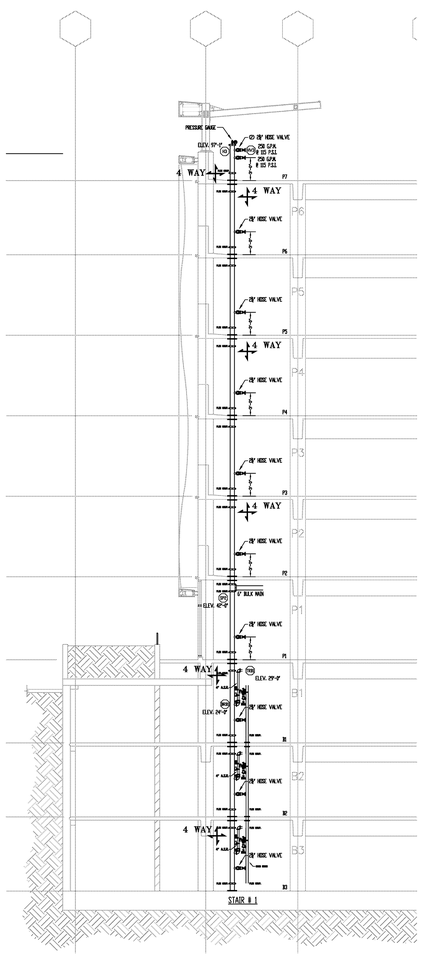


**STAIR # 1**
STANDPIPE # 1

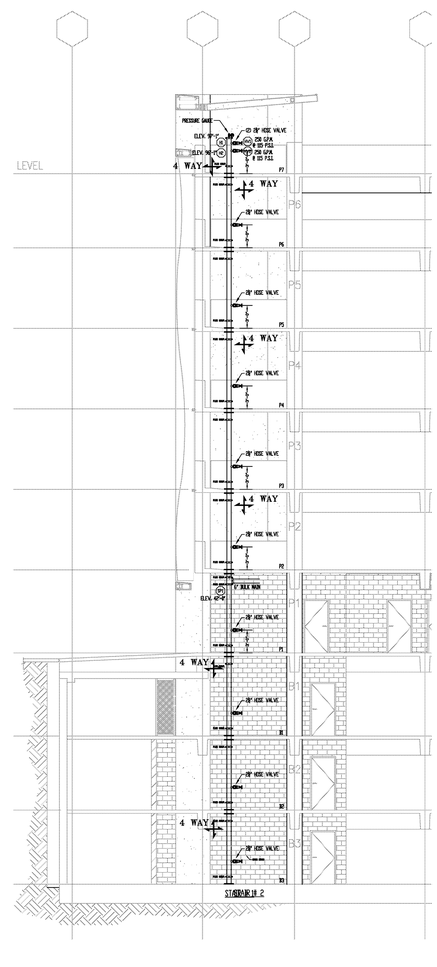


**STAIR # 2**
STANDPIPE # 2

**STAIRWELL - SECTIONS**
SCALE - 1/8" = 1'-0"

## GENERAL NOTES :

1. INSTALLATION SHALL CONFORM TO : N.F.P.A. 13 (2010 ED.), N.F.P.A. 14 (2010 ED.) N.F.P.A. 24 (2010 ED.) AND COUNTY OF SAN DIEGO FIRE DEPARTMENT REQUIREMENTS.
2. ALL MATERIALS INSTALLED SHALL BE NEW U.L. LISTED AND/OR F.M. "APPROVED FOR FIRE PROTECTION USE".
3. SYSTEM TO BE SUPPORTED AND SWAY-BRACED STRICTLY PER N.F.P.A. 13 (2010 EDITION). LATERAL SWAY BRACING MAY BE OMITTED WHERE HANGER RODS DO NOT EXCEED 6" (MEASURED FROM POINT OF ATTACHMENT TO TOP OF PIPE) AND THE METHOD(S) OF SUPPORT CONFORM TO EXCEPTIONS TO SWAY BRACING PER N.F.P.A. 13.
4. SYSTEMS OVER 100 HEADS SHALL BE MONITORED BY AN OFF-SITE CENTRAL STATION. U.L. LISTED AND/OR F.M. "APPROVED", AND ACCEPTABLE TO THE FIRE DEPARTMENT.
5. ELECTRICAL ROOMS, TRANSFORMER VAULTS AND OTHER ROOMS WHERE DIRECT WATER APPLICATION IS UNDESIRABLE SHALL BE PROVIDED WITH SHIELD TO DEFLECT WATER AWAY FROM EQUIPMENT (PROVIDED BY OTHERS). IF ACCEPTABLE BY THE LOCAL FIRE OFFICAL, AN APPROVED SMOKE ALARM SYSTEM SHALL BE FURNISHED IN LIEU OF THE FIRE SPRINKLERS. THIS DETECTOR SHALL BE MONITORED WITH THE FIRE SPRINKLER SYSTEM.
6. ANY ELECTRICAL SWITCHES AND BELLS NECESSARY TO PROVIDE AN AUDIBLE LOCAL ALARM SHALL BE PROVIDED BY THE FIRE SPRINKLER CONTRACTOR. ALL REQUIRED WIRING OF ELECTRICAL DEVICES SHALL BE DONE BY OTHERS.
7. WIRING OF FLOW SWITCHES SHALL BE "NORMALLY CLOSED" FOR CORRECT OPERATION IN ALARM MODE.
8. POWER FOR ALL FIRE SPRINKLER ALARMS SHALL BE TAKEN FROM A DESIGNATED CIRCUIT FOR FIRE ALARM USE ONLY AND SHALL BE SUPPLIED AFTER THE METER BUT AHEAD OF THE MAIN PANEL DISCONNECT. PERMANENT POWER SUPPLY MUST BE IN SERVICE BEFORE FINAL INSPECTION BY THE FIRE DEPARTMENT.
9. NON-FLEXIBLE (RIGID) GROOVED COUPLING SHALL BE USED ACCORDING TO THE EARTHQUAKE BRACING REQUIREMENTS OF N.F.P.A. 13 UNLESS NOTED OTHERWISE.
10. CONTRACTOR SHALL MAKE PIPING ABOVE SUSPENDED CEILING ACCESSIBLE TO FIRE DEPARTMENT PERSONNEL FOR VISUAL INSPECTIONS AS A CONDITION FOR FINAL APPROVAL.
11. WHERE REQUIRED BY SERVING FIRE DEPARTMENT, ALL CONTROL VALVES SHALL BE SUPERVISED AND/OR LOCKED IN THE OPEN POSITION.
12. BUILDING SPRINKLER SYSTEM SHALL NOT CONNECT TO SITE UNDERGROUND MAIN UNTIL SITE PIPING HAS BEEN TESTED AND FLUSHED PER N.F.P.A. 24.
13. NON-ACCESSIBLE/NON-COMBUSTILE DUCT SHAFTS AND ELEVATOR HOISTWAYS DO NOT REQUIRE FIRE SPRINKLER COVERAGE PER NFPA 13 (2002 ED).

## PROJECT DATA :

**A.P.N. - 533-322-04, 05, 06, 07, 09, 10**

**CONSTRUCTION TYPE :**
TYPE II-A (OPEN PARKING GARAGE)
TYPE I-A (ENCLOSED PARKING GARAGE)

**OCCUPANCY:**
S-2 LOW-HAZARD STORAGE

**STORIES :**
6 STORIES

**BLDG. HEIGHT :**
62'-6"

**FIRE PROTECTION :**
FULLY SPRINKLERED W/ STANDPIPE - (B3 - B1 LEVELS)
NON-SPRINKLERED - STANDPIPE ONLY (P1 - P7 LEVELS)

## SCOPE OF WORK :

1) INSTALLATION OF A NEW CLASS 1 STANDPIPE (ALL LEVELS)
2) INSTALLATION OF A NEW SPRINKLER SYSTEM (B3-B1 LEVELS)

**FIRE DEPARTMENT CONNECTION**
SERVES ADDRESS : 735 W. CEDAR ST. SAN DIEGO, CA. 92101
PRESSURE REQUIRED AT F.D.C. 151.75 P.S.I.
FLOW REQUIRED AT F.D.C. 750.0 G.P.M.
COSCO FIRE PROTECTION San Diego, Ca (858)444-2000

**FIRE DEPT. CONN. SIGN**

LOCATION OF THE TWO HYDRAULICALLY MOST REMOTE HOSE CONNECTIONS : STANDPIPE # 1, LEVEL P7
DESIGN FLOW RATE FOR THE CONNECTIONS IDENTIFIED ABOVE : 250 GPM PER CONNECTION
DESIGN RESIDUAL INLET AND OUTLET PRESSURE FOR THE CONNECTIONS IDENTIFIED ABOVE : RES. IN PSI - 117.69 RES. OUT PSI - 115.0
DESIGN STATIC PRESSURE AND DESIGN SYSTEM DEMAND (I.E., FLOW AND RESIDUAL PRESSURE AT THE SYSTEM CONTROL VALVE, OR AT THE PUMP DISCHARGE FLANGE WHERE A PUMP IS INSTALLED, AND AT EACH FIRE DEPT. CONN. : DESIGN STATIC PSI - 175.0 DESIGN SYSTEM DEMAND - 750 GPM

**SYSTEM HYDRAULIC INFO. SIGN**

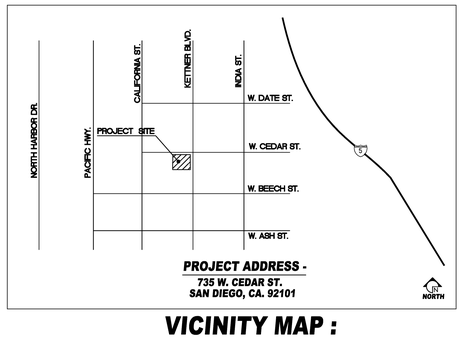


**PROJECT ADDRESS -**
735 W. CEDAR ST.
SAN DIEGO, CA. 92101

**VICINITY MAP :**
NTS

LICENSED FIRE PROTECTION CONTRACTOR
COSCO FIRE PROTECTION, INC.
CLASSIFICATION C-16
LICENSE NO. 577621
LOS ANGELES
STATE OF CALIFORNIA

| REVISIONS | | | |
|---|---|---|---|
| NO. | DESCRIPTION | DATE | BY |

| SYMBOL | S/N | ORIFICE | NPT | K-FACT. | HEAD FINISH | PLATE FINISH | TEMP. | QUAN. |
|---|---|---|---|---|---|---|---|---|
| | | | | | | | | |

SPRINKLER HEAD LEGEND:

TOTAL SPRINKLERS THIS SHEET =

APPROVALS BY:

COUNTY OF SAN DIEGO


COSCO Fire Protection
FIRE PROTECTION AND LIFE SAFETY SPECIALISTS
SAN DIEGO OFFICE
10075 Treena Street, Suite 105
San Diego, California 92131
call (858) 444-2000• fax (858) 444-2056
www.coscofire.com
California Cl.A LIC. # 577621
SAN DIEGO • LOS ANGELES • FRESNO • SAN FRANCISCO • SACRAMENTO • PORTLAND • SEATTLE • ANCHORAGE


PROJECT: CEDAR & KETTNER PARKING STRUCTURE
735 W. CEDAR ST.
SAN DIEGO, CA. 92101

CONTACT WITH: MCC-ARTHY BUILDING COMPANY
20401 S.W. BIRCH ST. SUITE 300
NEWPORT BEACH, CA. 92660

DRAWING: COVER SHEET & DETAILS

DATE : 4-28-2014
SCALE : AS NOTED
DRAWN BY : MC
JOB NO. 10.CB-0340
SHEET NO. 1 of 7

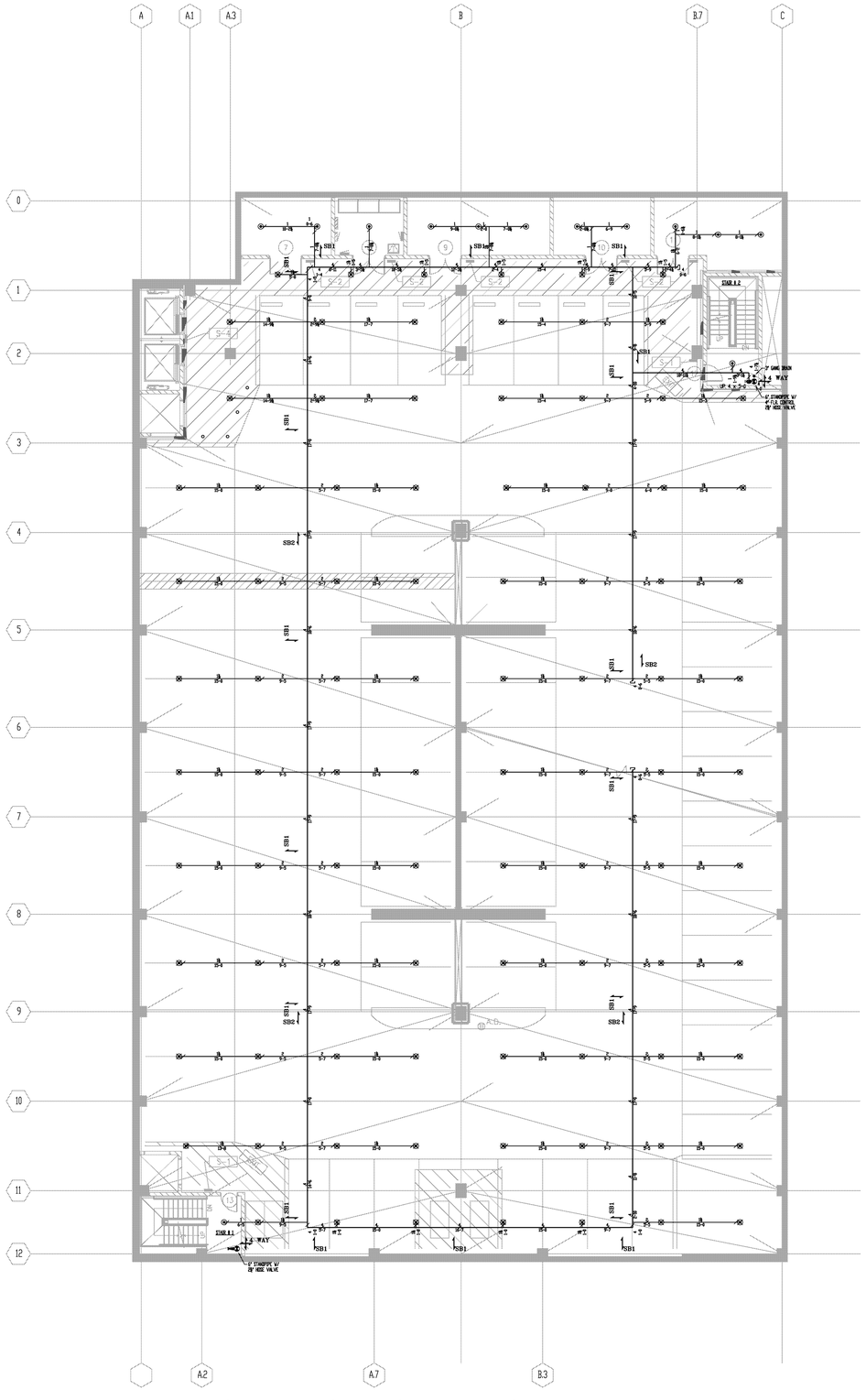


## B2 LEVEL GARAGE - FIRE SPRINKLER PLAN

SCALE - 3/32" = 1'-0"

NORTH

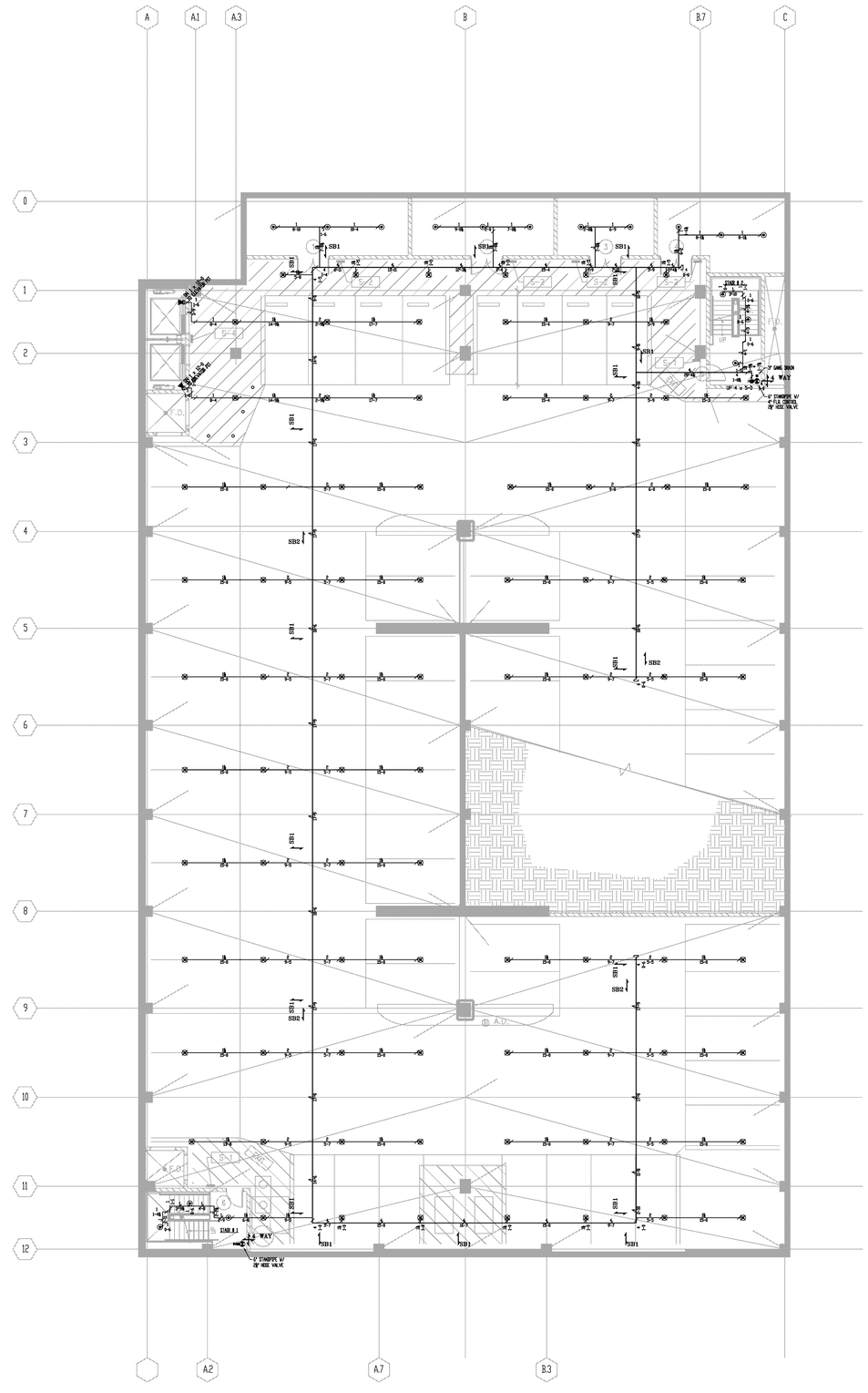


## B3 LEVEL GARAGE - FIRE SPRINKLER PLAN

SCALE - 3/32" = 1'-0"

NORTH

**SURGE RESTRAINT CLIP - ⁄**

NTS

**BRACING NOTES:**

1) ALL MAINS SUPPORTED BY RODS LESS THAN 6" SHALL NOT REQUIRE LATERAL BRACING OR CALCULATIONS. (PER N.F.P.A. 13 '10 ED. SEC. 9.3.5.3.9)
2) ALL BRANCHLINES HUNG WITH RODS < 6" OF STRUCTURE SHALL NOT REQUIRE BRANCHLINE RESTRAINTS PER NFPA.
3) PROVIDE BRANCHLINE RESTRAINTS WHERE RODS EXCEED 6" IN ACCORDANCE WITH NFPA 13 (TABLE 9.3.6.4a) 27".

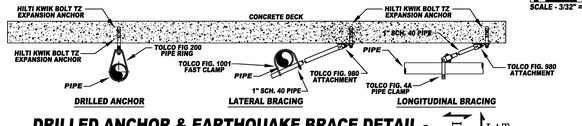


**DRILLED ANCHOR & EARTHQUAKE BRACE DETAIL -**

NTS

**STEEL PIPING NOTES:**

1) ALL NEW PIPING 1" - 2" SHALL BE SCH. 40 BLACK STEEL W/ THREADED FITTINGS
2) ALL NEW 3" - 6" SYSTEM PIPING SHALL BE SCH. 10 BLACK STEEL W/ GROOVED FITTINGS
3) ALL NEW 4" & 6" STANDPIPE PIPING SHALL BE SCH. 10 BLACK STEEL W/ GROOVED FITTINGS
4) ALL NEW 3" GANG DRAIN PIPING SHALL BE SCH. 10 GALVANIZED STEEL W/ GROOVED FITTINGS

**HANGER SPACING NOTES:**

| MAXIMUM DISTANCE BETWEEN HANGERS | | | | | | | | |
|---|---|---|---|---|---|---|---|---|
| NOMINAL PIPE SIZE (in.) | 1" | 1-1/4" | 1-1/2" | 2" | 3" | 4" | 6" | 8" |
| STEEL | 12'-0" | 12'-0" | 10'-0" | 10'-0" | 10'-0" | 10'-0" | 10'-0" | 10'-0" |

| PIPE SIZE | ROD DIA. |
|---|---|
| 1" - 4" | 3/8" |
| 6" | 1/2" |

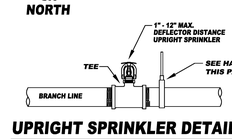


**UPRIGHT SPRINKLER DETAIL = ⊗⊙**

NTS

LICENSED FIRE PROTECTION CONTRACTOR
COSCO FIRE PROTECTION, INC.
CLASSIFICATION: C-16
LICENSE NO. 577621
LOS ANGELES
STATE OF CALIFORNIA

**REVISIONS**

| NO. | DESCRIPTION | DATE | BY |
|---|---|---|---|
| | | | |

**SPRINKLER HEAD LEGEND:**

| | SYMBOL | S/N | ORIFICE | NPT | K-FACT. | HEAD BRASS | PLATE FINISH | TEMP. | QUAN. |
|---|---|---|---|---|---|---|---|---|---|
| RELIABLE - G5FR VELO - RECSH UPRIGHT (20' SPACING) | ⊗ | RA553 | 3/4" | 3/4" | 14.0 | BRASS | BRASS | 212° | 172 |
| RELIABLE - F1FR SSU (130 SQ. FT. SPACING) | ⊙ | RA1-635 | 1/2" | 1/2" | 5.6 | BRASS | BRASS | 200° | 30 |
| RELIABLE - F1FR HSW (130 SQ. FT. SPACING) | ▼ | RA1-635 | 1/2" | 1/2" | 5.6 | BRASS | N/A | 200° | 2 |

**APPROVALS BY:** COUNTY OF SAN DIEGO

**TOTAL SPRINKLERS THIS SHEET** = 204


COSCO Fire Protection
FIRE PROTECTION AND LIFE SAFETY SPECIALISTS
SAN DIEGO OFFICE
10055 Trasira Street, Suite 105
San Diego, California 92131
call (858) 444-2000•fax (858) 444-2056
www.coscofire.com
California C-16
LIC. # 577621
SAN DIEGO • LOS ANGELES • FRESNO • SAN FRANCISCO • SACRAMENTO • PORTLAND • SEATTLE • ANCHORAGE


PROJECT: CEDAR & KETTNER PARKING STRUCTURE
735 W. CEDAR ST.
SAN DIEGO, CA. 92101

CONTRACT WITH: McCARTHY BUILDING COMPANY
20401 S.W. BIRCH ST. SUITE 300
NEWPORT BEACH, CA. 92660

DRAWING: B3 & B2 LEVEL - FIRE SPRINKLER PLAN

DATE: 4-28-2014
SCALE: 3/32" = 1'-0"
DRAWN BY: MC
JOB NO. 10.CB-0340
SHEET NO. 2 of 7

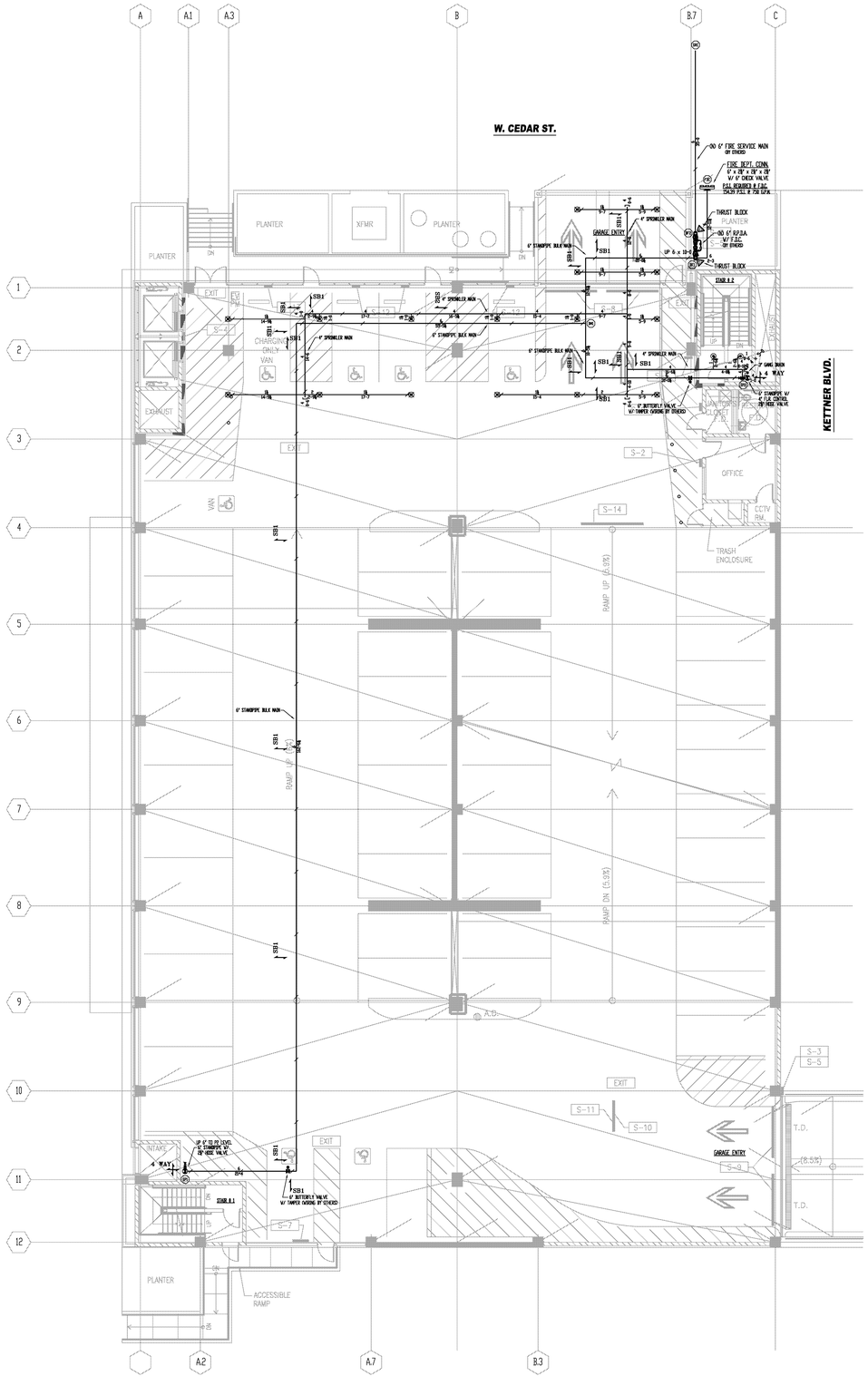


## P1 LEVEL GARAGE - STANDPIPE PLAN

SCALE - 3/32" = 1'-0"

NORTH

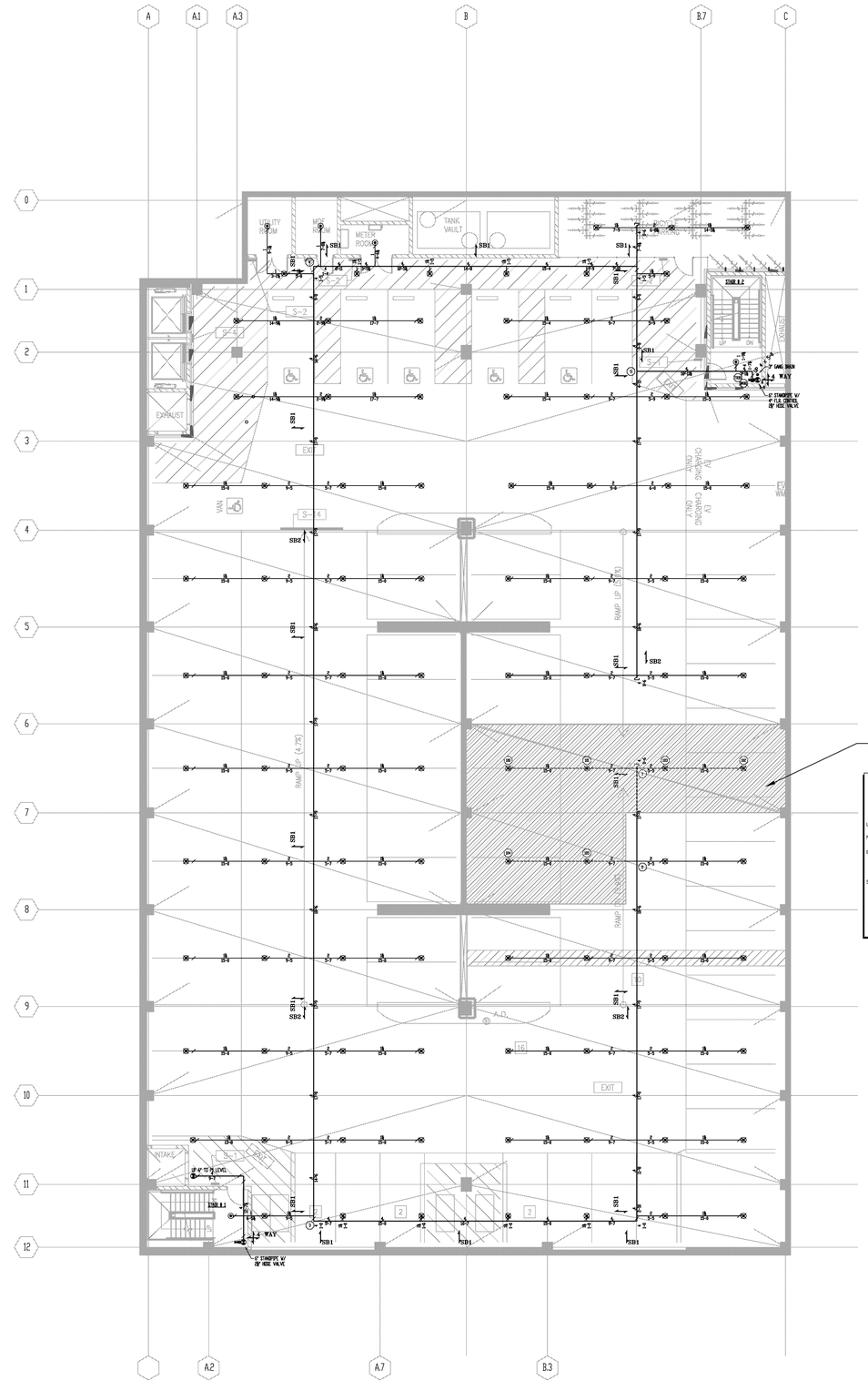


## B1 LEVEL GARAGE - FIRE SPRINKLER PLAN

SCALE - 3/32" = 1'-0"

NORTH

**B1 LEVEL - CALC # 1**
15 / 6 HDS.
NODES - 100-105

### HYDRAULIC-SYSTEM

THIS BUILDING IS PROTECTED BY A HYDRAULICALLY DESIGNED AUTOMATIC SPRINKLER SYSTEM

LOCATION: B1 LEVEL - CALC # 1

NO. OF SPRINKLERS: 6 HEADS

BASIS OF DESIGN
1. DENSITY: .15 GPM/SQ. FT.
2. DESIGNED AREA OF DISCHARGE: 1500 SQ.FT.

SYSTEM DEMAND
1. GPM DISCHARGE: 231.17 GPM
2. RESIDUAL PRESSURE AT THE BASE OF THE RISER - BWR: 42.86 PSI
3. TOTAL HOSE ALLOWANCE: 250 GPM

COSCO FIRE PROTECTION
San Diego, Ca. (858)444-2000

### SPRINKLER HEAD LEGEND:

| | SYMBOL | S/N | ORIFICE | NPT | K-FACT. | HEAD BRASS | PLATE FINISH | TEMP. | QUAN. |
|---|---|---|---|---|---|---|---|---|---|
| RELAXIE - CORI VELO - RECOH UPRIGHT (20' SPACING) | ⊗ | RA553 | 3/4" | 3/4" | 14.0 | BRASS | BRASS | 212° | 109 |
| RELAXIE - F1FR SSU (130 SQ. FT. SPACING) | ◉ | RA1-K25 | 1/2" | 1/2" | 5.6 | BRASS | BRASS | 200° | 7 |
| RELAXIE - F1FR HSW (130 SQ. FT. SPACING) | ▼ | RA1-K25 | 1/2" | 1/2" | 5.6 | BRASS | N/A | 200° | 0 |

TOTAL SPRINKLERS THIS SHEET = 116

APPROVALS BY:

COUNTY OF SAN DIEGO

### REVISIONS

| NO. | DESCRIPTION | DATE | BY |
|---|---|---|---|
| | | | |

LICENSED FIRE PROTECTION CONTRACTOR
COSCO FIRE PROTECTION, INC.
CLASSIFICATION: C-16
LICENSE NO. 577621
LOS ANGELES
STATE OF CALIFORNIA


COSCO Fire Protection
FIRE PROTECTION AND LIFE SAFETY SPECIALISTS
SAN DIEGO OFFICE
10693 Treena Street, Suite 105
San Diego, California 92131
cal (858) 444-2000•fax (858) 444-2056
California C-16
LIC. # 577621
www.coscofire.com
SAN DIEGO • LOS ANGELES • FRESNO • SAN FRANCISCO • SACRAMENTO • PORTLAND • SEATTLE • ANCHORAGE


PROJECT:
CEDAR & KETTNER PARKING STRUCTURE
735 W. CEDAR ST.
SAN DIEGO, CA. 92101

CONTACT WITH:
McCARTHY BUILDING COMPANY
20401 S.W. BIRCH ST. SUITE 300
NEWPORT BEACH, CA. 92660

DRAWING TITLE:
B1 & P1 LEVEL - FIRE SPRINKLER & STANDPIPE PLAN

DATE: 4-28-2014
SCALE: 3/32" = 1'-0"
DRAWN BY: MC
JOB NO. 10.CB-0340
SHEET NO. 3 of 7

## SURGE RESTRAINT CLIP - ⁄

NTS

**BRACING NOTES:**

1) ALL MAINS SUPPORTED BY RODS LESS THAN 6" SHALL NOT REQUIRE LATERAL BRACING OR CALCULATIONS. (PER N.F.P.A. 13 '10 ED. SEC. 9.3.5.3.9)
2) ALL BRANCHLINES HUNG WITH RODS < 6" OF STRUCTURE SHALL NOT REQUIRE BRANCHLINE RESTRAINTS PER NFPA.
3) PROVIDE BRANCHLINE RESTRAINTS WHERE RODS EXCEED 6" IN ACCORDANCE WITH NFPA 13 (TABLE 9.3.6.4a) 27".

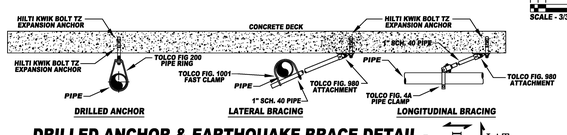


## DRILLED ANCHOR & EARTHQUAKE BRACE DETAIL -

NTS

**STEEL PIPING NOTES:**

1) ALL NEW PIPING 1" - 2" SHALL BE SCH. 40 BLACK STEEL W/ THREADED FITTINGS
2) ALL NEW 3" - 6" SYSTEM PIPING SHALL BE SCH. 10 BLACK STEEL W/ GROOVED FITTINGS
3) ALL NEW 4" & 6" STANDPIPE PIPING SHALL BE SCH. 10 BLACK STEEL W/ GROOVED FITTINGS
4) ALL NEW 3" GANG DRAIN PIPING SHALL BE SCH. 10 GALVANIZED STEEL W/ GROOVED FITTINGS

**HANGER SPACING NOTES:**

| MAXIMUM DISTANCE BETWEEN HANGERS | | | | | | | | |
|---|---|---|---|---|---|---|---|---|
| NOMINAL PIPE SIZE (in.) | 1" | 1-1/4" | 1-1/2" | 2" | 3" | 4" | 6" | 8" |
| STEEL | 12'-0" | 12'-0" | 15'-0" | 15'-0" | 15'-0" | 15'-0" | 15'-0" | 15'-0" |

| PIPE SIZE | ROD DIA. |
|---|---|
| 1" - 4" | 3/8" |
| 6" | 1/2" |

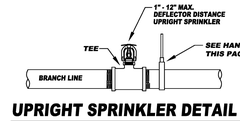


## UPRIGHT SPRINKLER DETAIL = ⊗◉

NTS

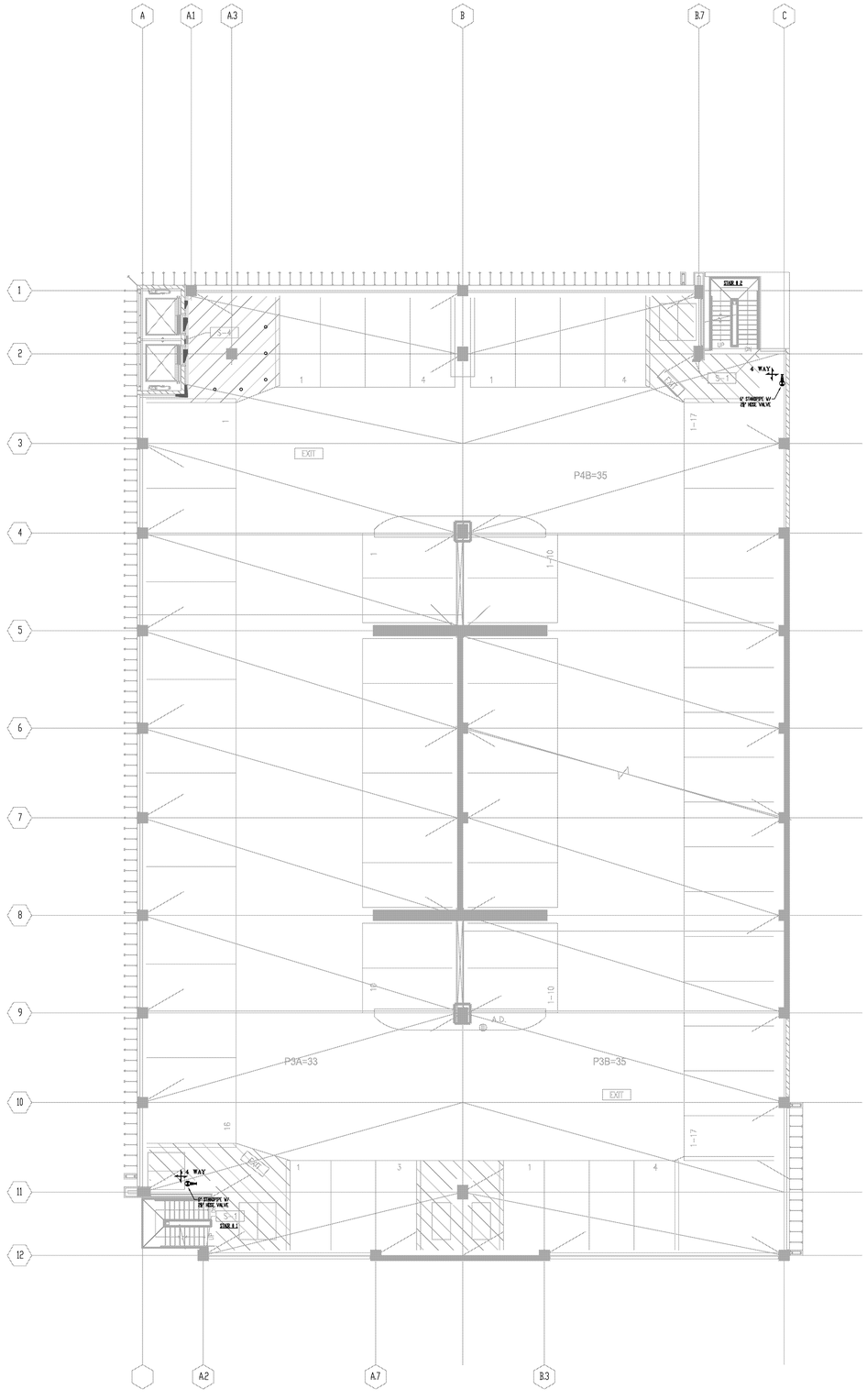


## P3 LEVEL GARAGE - STANDPIPE PLAN

SCALE - 3/32" = 1'-0"

NORTH

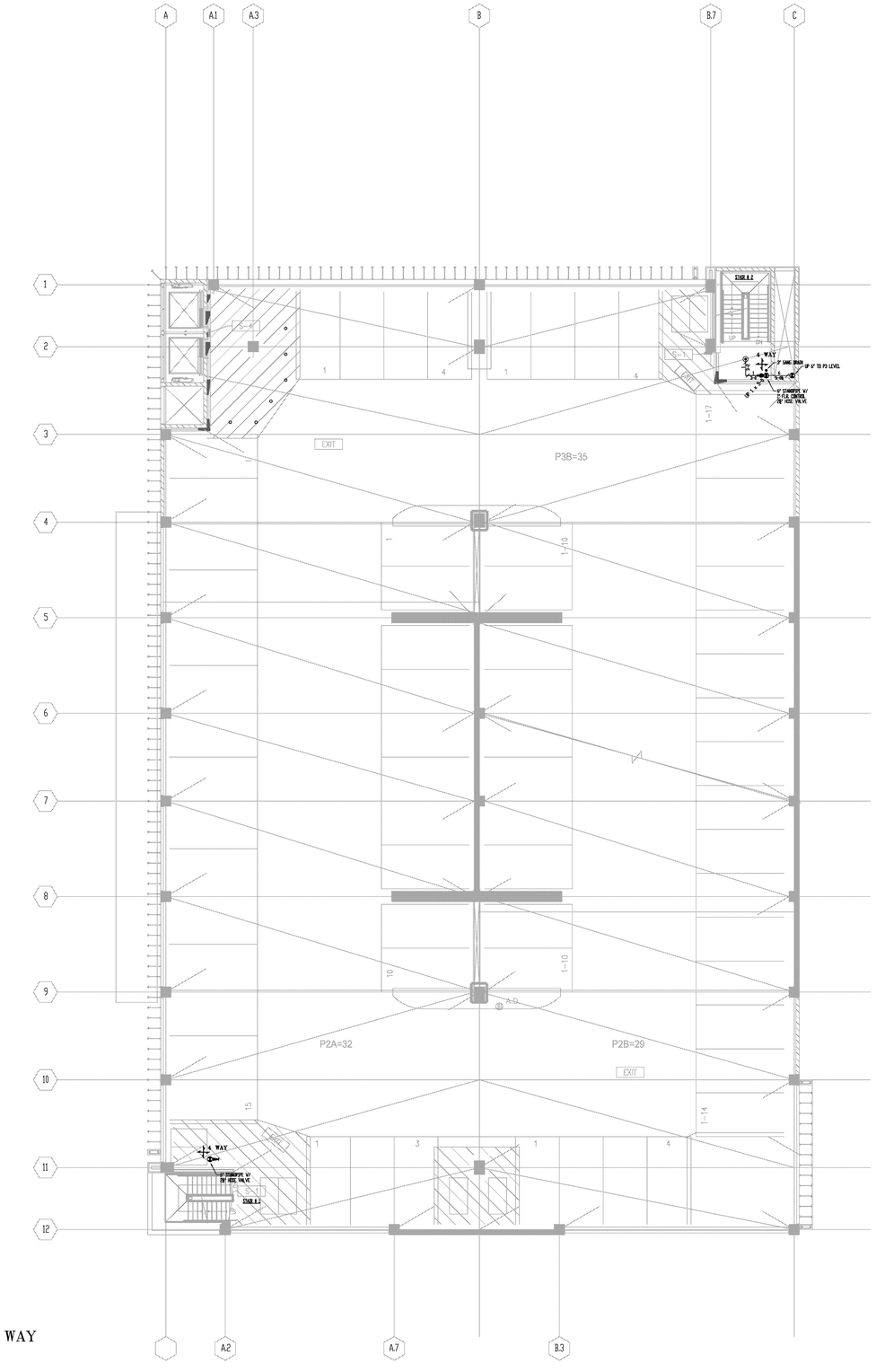


## P2 LEVEL GARAGE - STANDPIPE PLAN

SCALE - 3/32" = 1'-0"

NORTH

**PIPE CLEARANCE NOTE :**
6" STANDPIPE TO HAVE A 10" SLEEVE

**FLEX COUPLING**
FLEX COUP. TO BE INSTALLED WITHIN 12" ABOVE AND 24" BELOW EACH FLOOR PENETRATION AND AT TOP OF EACH SYSTEM RISER

**4-WAY BRACING**
VERTICAL STANDPIPE BRACING SHALL BE INSTALLED PER N.F.P.A. 13 '10 ED. - 9.2.5.5

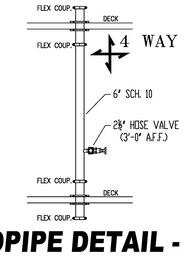


## STANDPIPE DETAIL - (TYPICAL)

N.T.S. @ STAIR # 1 & 2

**STEEL PIPING NOTES:**

1) ALL NEW PIPING 1" - 2" SHALL BE SCH. 40 BLACK STEEL W/ THREADED FITTINGS
2) ALL NEW 3" - 5" SYSTEM PIPING SHALL BE SCH. 10 BLACK STEEL W/ GROOVED FITTINGS
3) ALL NEW 4" & 6" STANDPIPE PIPING SHALL BE SCH. 10 BLACK STEEL W/ GROOVED FITTINGS
4) ALL NEW 3" GANG DRAIN PIPING SHALL BE SCH. 10 GALVANIZED STEEL W/ GROOVED FITTINGS

LICENSED FIRE PROTECTION CONTRACTOR
COSCO FIRE PROTECTION, INC.
CLASSIFICATION: C-16
LICENSE NO. 577621
LOS ANGELES
STATE OF CALIFORNIA

**REVISIONS**

| NO. | DESCRIPTION | DATE | BY |
|---|---|---|---|
| | | | |

**SPRINKLER HEAD LEGEND:**
RELIABLE - F1FR SSU (130 SQ. FT. SPACING)

| SYMBOL | S/N | ORIFICE | NPT | K-FACT. | HEAD FINISH | PLATE FINISH | TEMP. | QUAN. |
|---|---|---|---|---|---|---|---|---|
| ⊛ | RA1425 | 1/2" | 1/2" | 5.6 | BRASS | N/A | 200° | 1 |

**TOTAL SPRINKLERS THIS SHEET** = 1

**APPROVALS BY:**

COUNTY OF SAN DIEGO


COSCO Fire Protection
FIRE PROTECTION AND LIFE SAFETY SPECIALISTS
SAN DIEGO OFFICE
10693 Treena Street, Suite 105
San Diego, California 92131
cell (858) 444-2000•fax (858) 444-2056
www.coscofire.com
California C-16
LIC. # 577621
SAN DIEGO • LOS ANGELES • FRESNO • SAN FRANCISCO • SACRAMENTO • PORTLAND • SEATTLE • ANCHORAGE


**PROJECT:**
CEDAR & KETTNER PARKING STRUCTURE
735 W. CEDAR ST.
SAN DIEGO, CA. 92101

**CONTRACT WITH:**
McCARTHY BUILDING COMPANY
20401 S.W. BIRCH ST. SUITE 300
NEWPORT BEACH, CA. 92660

**DRAWING TITLE:**
P2 & P3 LEVEL - STANDPIPE PLAN

| | |
|---|---|
| DATE : | 4-28-2014 |
| SCALE : | 3/32" = 1'-0" |
| DRAWN BY : | MC |
| JOB NO. | 10.CB-0340 |
| SHEET NO. | 4 of 7 |

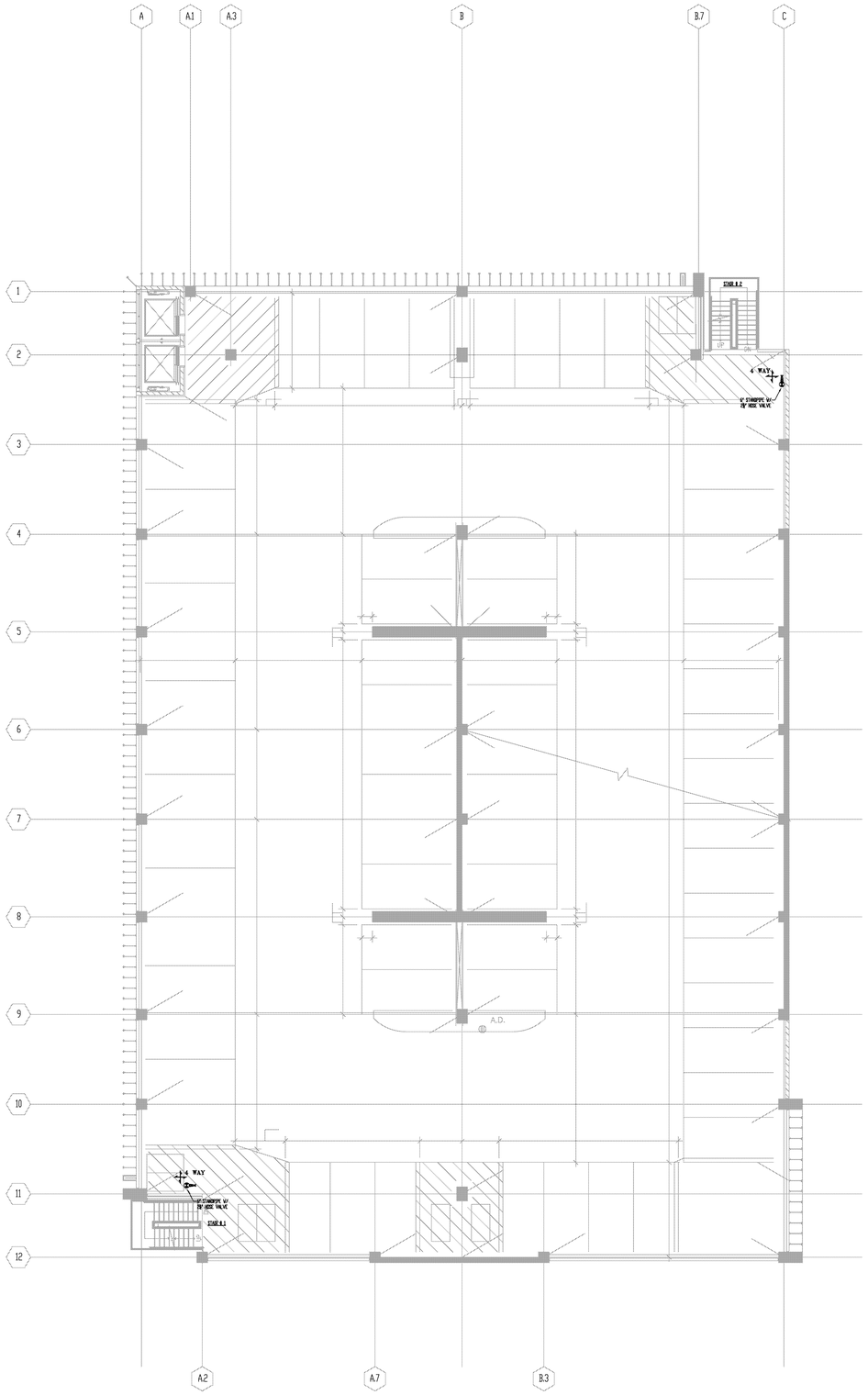


## P5 LEVEL GARAGE - STANDPIPE PLAN

SCALE - 3/32" = 1'-0"

N NORTH

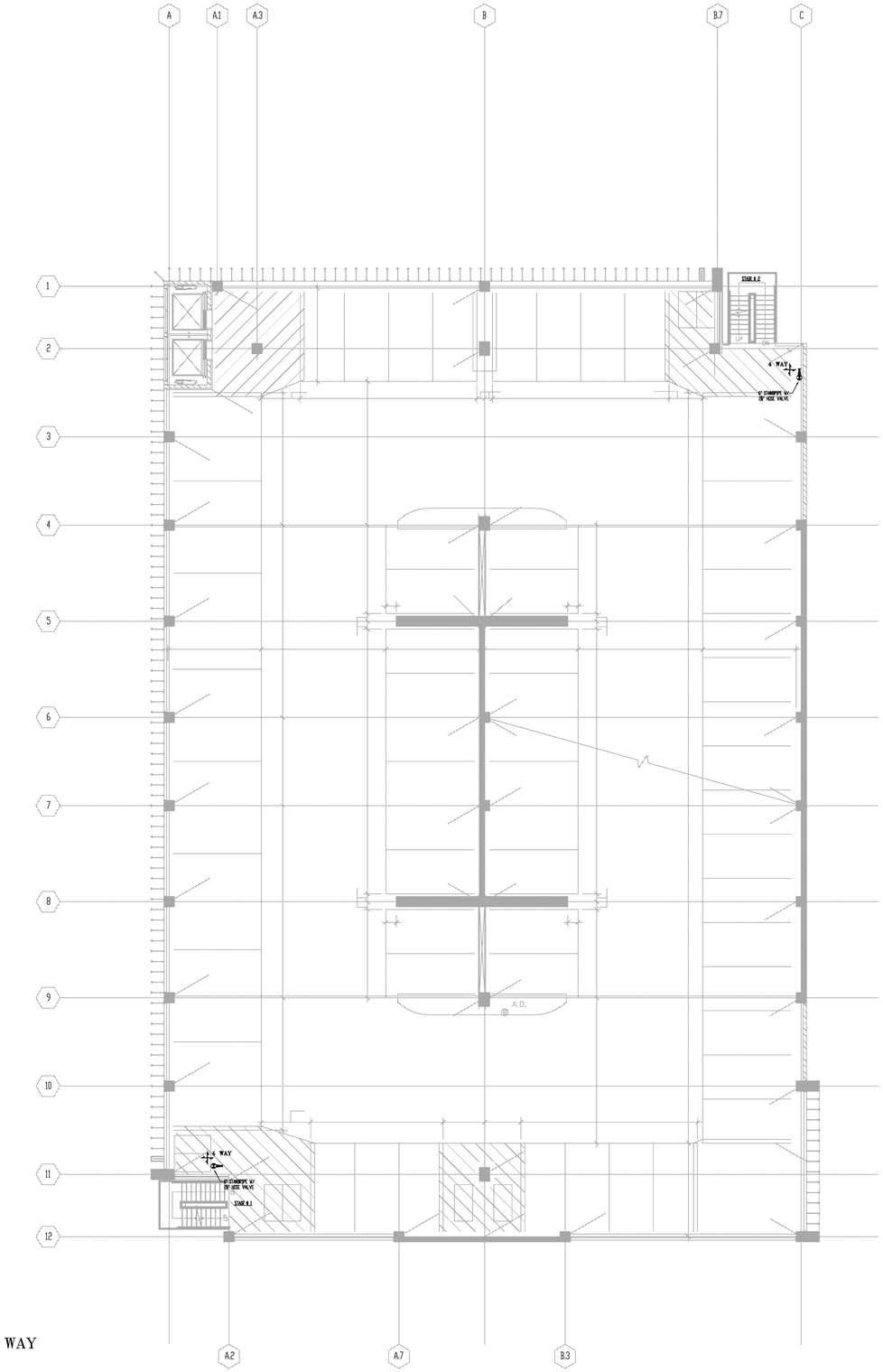


## P4 LEVEL GARAGE - STANDPIPE PLAN

SCALE - 3/32" = 1'-0"

N NORTH

**PIPE CLEARANCE NOTE :**
6" STANDPIPE TO HAVE A 10" SLEEVE

**FLEX COUPLING**
FLEX COUP. TO BE INSTALLED WITHIN 12" ABOVE AND 24" BELOW EACH FLOOR PENETRATION AND AT TOP OF EACH SYSTEM RISER

**4-WAY BRACING**
VERTICAL STANDPIPE BRACING SHALL BE INSTALLED PER N.F.P.A. 13 '10 ED. - 9.2.5.5

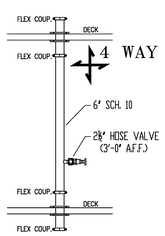


## STANDPIPE DETAIL - (TYPICAL)

N.T.S. @ STAIR # 1 & 2

**STEEL PIPING NOTES:**
1) ALL NEW PIPING 1" - 2" SHALL BE SCH. 40 BLACK STEEL W/ THREADED FITTINGS
2) ALL NEW 3" - 6" SYSTEM PIPING SHALL BE SCH. 10 BLACK STEEL W/ GROOVED FITTINGS
3) ALL NEW 4" & 6" STANDPIPE PIPING SHALL BE SCH. 10 BLACK STEEL W/ GROOVED FITTINGS
4) ALL NEW 3" GANG DRAIN PIPING SHALL BE SCH. 10 GALVANIZED STEEL W/ GROOVED FITTINGS

LICENSED FIRE PROTECTION CONTRACTOR
COSCO FIRE PROTECTION INC.
CLASSIFICATION C-16
LICENSE NO. 577621
LOS ANGELES
STATE OF CALIFORNIA

**REVISIONS**

| NO. | DESCRIPTION | DATE | BY |
|---|---|---|---|
| | | | |

SPRINKLER HEAD LEGEND :

| SYMBOL | S/N | ORIFICE | NPT | K-FACT. | HEAD FINISH | PLATE FINISH | TEMP. | QUAN. |
|---|---|---|---|---|---|---|---|---|
| | | | | | | | | |

APPROVALS BY: COUNTY OF SAN DIEGO

TOTAL SPRINKLERS THIS SHEET =


COSCO Fire Protection
FIRE PROTECTION AND LIFE SAFETY SPECIALISTS
SAN DIEGO OFFICE
10695 Treena Street, Suite 105
San Diego, California 92131
call (858) 444-2000 • fax (858) 444-2056
www.coscofire.com
California C-16
LIC. # 577621
SAN DIEGO • LOS ANGELES • FRESNO • SAN FRANCISCO • SACRAMENTO • PORTLAND • SEATTLE • ANCHORAGE


PROJECT: CEDAR & KETTNER PARKING STRUCTURE
735 W. CEDAR ST.
SAN DIEGO, CA. 92101

CONTRACT WITH: McCARTHY BUILDING COMPANY
20401 S.W. BIRCH ST. SUITE 300
NEWPORT BEACH, CA. 92660

DRAWING TITLE: P4 & P5 LEVEL - STANDPIPE PLAN

DATE : 4-28-2014
SCALE : 3/32" = 1'-0"
DRAWN BY : MC
JOB NO. 10.CB-0340
SHEET NO. 5 of 7

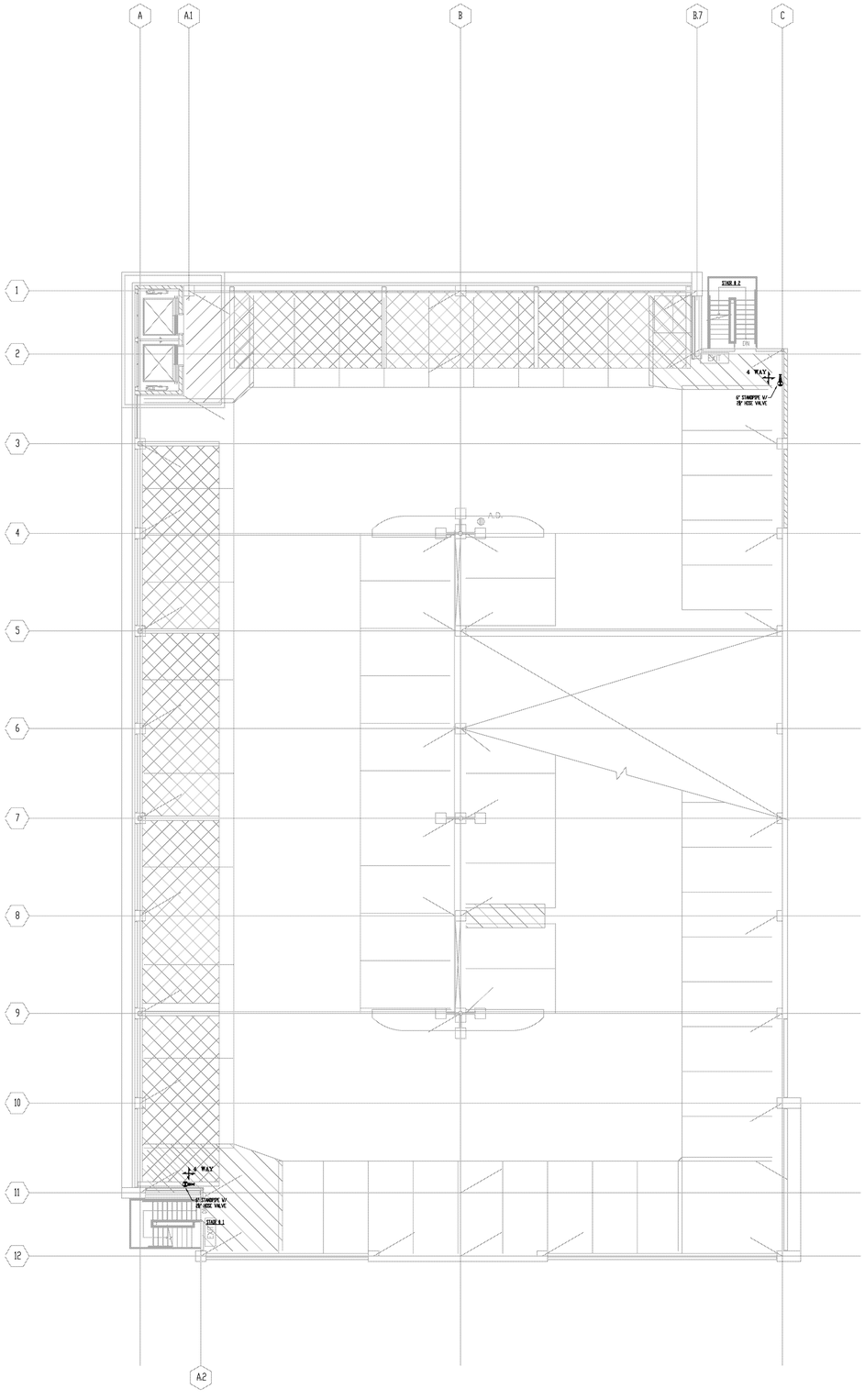


## P7 / ROOF LEVEL GARAGE - STANDPIPE PLAN

SCALE - 3/32" = 1'-0"

N NORTH

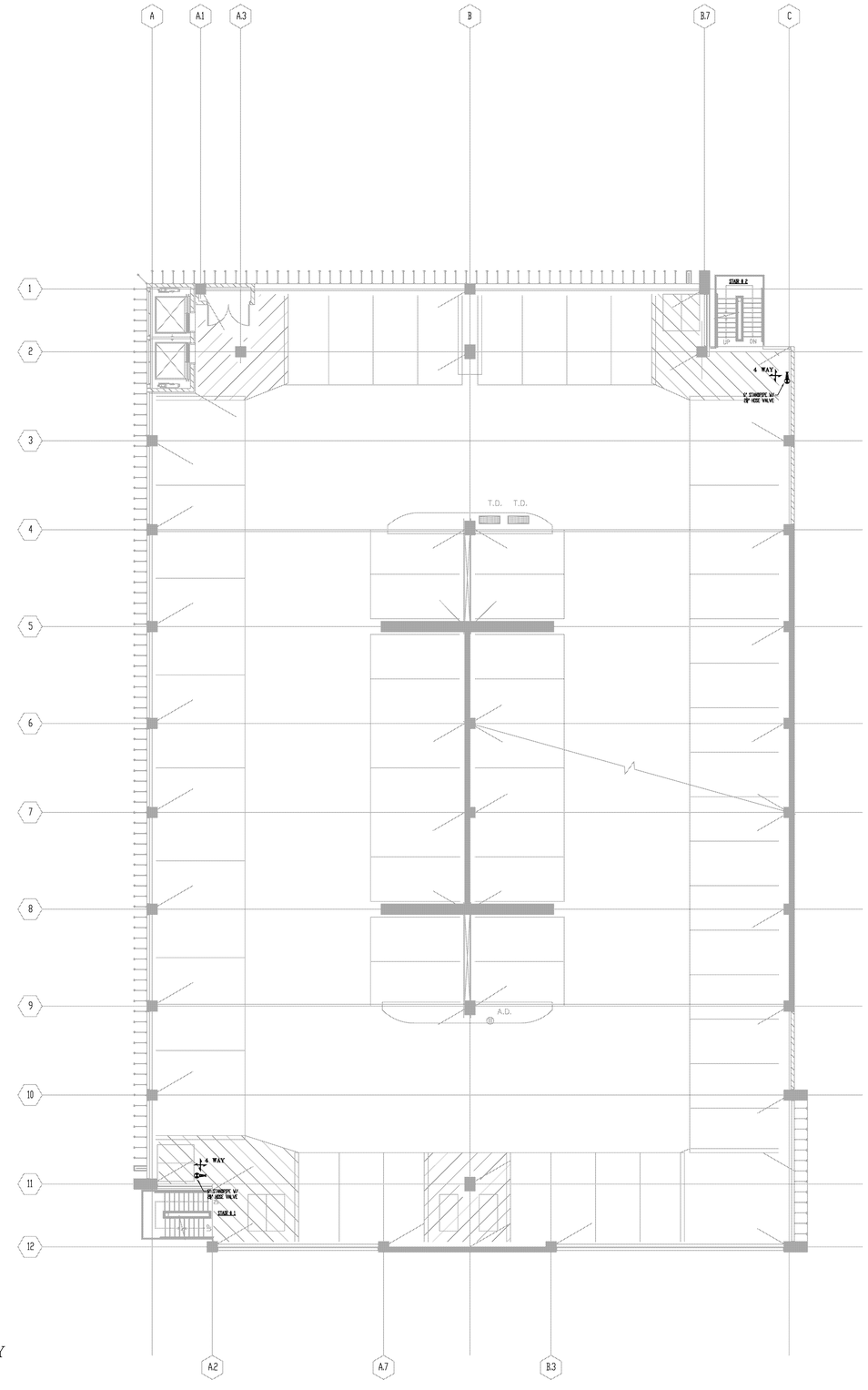


## P6 LEVEL GARAGE - STANDPIPE PLAN

SCALE - 3/32" = 1'-0"

N NORTH

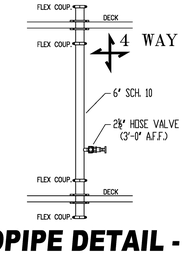


## STANDPIPE DETAIL - (TYPICAL)

N.T.S. @ STAIR # 1 & 2

**PIPE CLEARANCE NOTE :**
6" STANDPIPE TO HAVE A 10" SLEEVE

**FLEX COUPLING**
FLEX COUP. TO BE INSTALLED WITHIN 12" ABOVE AND 24" BELOW EACH FLOOR PENETRATION AND AT TOP OF EACH SYSTEM RISER

**4-WAY BRACING**
VERTICAL STANDPIPE BRACING SHALL BE INSTALLED PER N.F.P.A. 13 '10 ED. - 9.2.5.5

**STEEL PIPING NOTES:**

1) ALL NEW PIPING 1" - 2" SHALL BE SCH. 40 BLACK STEEL W/ THREADED FITTINGS
2) ALL NEW 3" - 6" SYSTEM PIPING SHALL BE SCH. 10 BLACK STEEL W/ GROOVED FITTINGS
3) ALL NEW 4" & 6" STANDPIPE PIPING SHALL BE SCH. 10 BLACK STEEL W/ GROOVED FITTINGS
4) ALL NEW 3" GANG DRAIN PIPING SHALL BE SCH. 10 GALVANIZED STEEL W/ GROOVED FITTINGS

LICENSED FIRE PROTECTION CONTRACTOR
COSCO FIRE PROTECTION, INC.
CLASSIFICATION C-16
LICENSE NO. 577621
LOS ANGELES
STATE OF CALIFORNIA

**REVISIONS**

| NO. | DESCRIPTION | DATE | BY |
|---|---|---|---|
| | | | |

**SPRINKLER HEAD LEGEND:**

| SYMBOL | S/N | ORIFICE | NPT | K-FACT. | HEAD FINISH | PLATE FINISH | TEMP. | QUAN. |
|---|---|---|---|---|---|---|---|---|
| | | | | | | | | |

TOTAL SPRINKLERS THIS SHEET =

APPROVALS BY: COUNTY OF SAN DIEGO


COSCO Fire Protection
FIRE PROTECTION AND LIFE SAFETY SPECIALISTS
SAN DIEGO OFFICE
10670 Treena Street, Suite 105
San Diego, California 92131
call (858) 444-2000 • fax (858) 444-2056
www.coscofire.com
California C-16
LIC. # 577621
SAN DIEGO • LOS ANGELES • FRESNO • SAN FRANCISCO • SACRAMENTO • PORTLAND • SEATTLE • ANCHORAGE


PROJECT: CEDAR & KETTNER PARKING STRUCTURE
735 W. CEDAR ST.
SAN DIEGO, CA. 92101

CONTRACT WITH: McCARTHY BUILDING COMPANY
20401 S.W. BIRCH ST. SUITE 300
NEWPORT BEACH, CA. 92660

DRAWING TITLE: P6 & P7 LEVEL - STANDPIPE PLAN

| | |
|---|---|
| DATE : | 4-28-2014 |
| SCALE : | 3/32" = 1'-0" |
| DRAWN BY : | MC |
| JOB NO. | 10.CB-0340 |
| SHEET NO. | 6 of 7 |

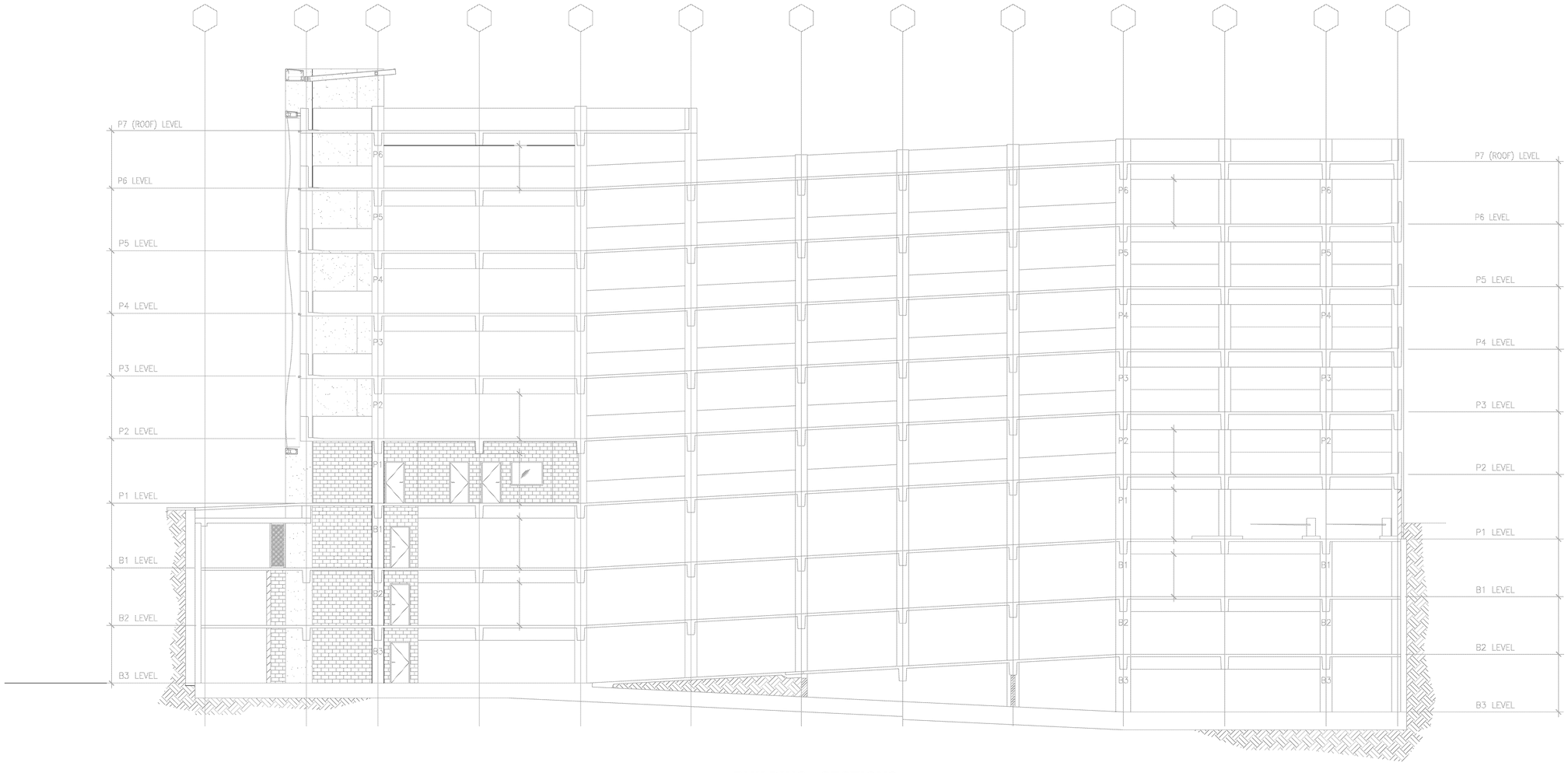


## BUILDING - SECTIONS

SCALE - 1/8" = 1'-0"

LICENSED FIRE PROTECTION CONTRACTOR
COSCO FIRE PROTECTION, INC.
CLASSIFICATION: C-16
LICENSE NO. 577621
LOS ANGELES
STATE OF CALIFORNIA

| REVISIONS | | | |
|---|---|---|---|
| NO. | DESCRIPTION | DATE | BY |

| SPRINKLER HEAD LEGEND: | SYMBOL | S/N | ORIFICE | NPT | K-FACT. | HEAD FINISH | PLATE FINISH | TEMP. | QUAN. |
|---|---|---|---|---|---|---|---|---|---|
| | | | | | | | | | |

APPROVALS BY:

COUNTY OF SAN DIEGO

TOTAL SPRINKLERS THIS SHEET =


COSCO Fire Protection
FIRE PROTECTION AND LIFE SAFETY SPECIALISTS
SAN DIEGO OFFICE
10695 Treena Street, Suite 105
San Diego, California 92131
call (858) 444-2000 • fax (858) 444-2056
www.coscofire.com
California C-16
LIC. # 577621
SAN DIEGO • LOS ANGELES • FRESNO • SAN FRANCISCO • SACRAMENTO • PORTLAND • SEATTLE • ANCHORAGE


PROJECT:
CEDAR & KETTNER PARKING STRUCTURE
735 W. CEDAR ST.
SAN DIEGO, CA. 92101

CONTACT WITH:
McCARTHY BUILDING COMPANY
20401 S.W. BIRCH ST. SUITE 300
NEWPORT BEACH, CA. 92660

DRAWING TITLE:
BUILDING SECTIONS

DATE : 4-28-2014

SCALE : 1/8" = 1'-0"

DRAWN BY : MC

JOB NO. 10.CB-0340

SHEET NO. 7 of 7