SAN DIEGO AREA

CHRISTIANSEN

REGIONAL STANDARD DRAWINGS

STANDARD DRAWINGS FOR AGENCIES IN THE SAN DIEGO REGION

Recommended by the Regional Standards Committee
Maintained and Published by the San Diego County
Department of Public Works
October, 1982

TABLE OF CONTENTS - Continued

G-18 Concrete Pavement, Width 40' or Less

G-19 Concrete Pavement, Width 40' to 62'

G-20 Concrete Pavement, Width 53' to 69'

G-21 Concrete Pavement, Alley Section, Width 40' or Less

G-22 Cutoff Wall at End of Pavement

G-23 Cutoff Wall at End of Alley Pavement

G-24.1 Trench Resurfacing - Types A and B

G-25.1 Trench Resurfacing - Types C and D

G-26 Concrete Driveway Commercial Alternate

SPRINKLER IRRIGATION SYSTEMS

I-1 Shrubbery Sprinkler Head, Fixed Spray Type

I-2.1 Sprinkler Head, Pop Up Spray Type

I-3 Lawn Sprinkler Head, Pop Up Rotary (With Swing Joint)

I-5.1 Quick Coupling Valve

I-6.1 Hose Bibb (Garden Valve)

I-7.1 Backflow Preventer Atmospheric Vacuum Breaker (2" and Smaller)

I-8.1 Backflow Preventer Continuous Pressure Vacuum Breaker Assembly (2" and Smaller)

I-9.1 Backflow Preventer Reduced Pressure Vacuum Breaker Assembly

I-10.1 Backflow Preventer Double Check Valve Assembly (2" and Smaller)

I-11.1 Backflow Preventer Double Check Valve Assembly (3" and Larger)

I-12.1 Gate Valve (2" and Smaller)

I-13.1 Manual Valves

I-14.1 Remote Control Valve

I-15 Electrical Pull Box for Direct Burial Control Wires and Splice Details

I-16.1 Direct Burial Control Wire

I-17.1 Irrigation Systems Electric Controller Clock Pedestal Mounting

I-18 Irrigation Systems Electric Controller Clock Wall Mounting

I-19.1 Impact head - Above Ground Pipe Installation

I-20 Pinning of Pipe - Above Ground Pipe Installation

I-21 Manual Control Valve and Gate Valve Installation for Above Ground Pipe Installations

I-22 Quick Coupler Assembly - Above Ground Pipe Installations

I-23 Swing Joint and Pipe Installation on Slopes Above Ground Pipe Installations

I-24 Double Swing Joint - Above Ground Pipe Installations

I-25.1 Trench Detail Non-Pressure Pipe (2" and Smaller)

I-26.1 Trench Detail Pressure Pipe

I-27 Valve Well and Cover

I-28.1 Connection Detail for New Asbestos Cement Supply Mains

I-29.1 Connection Detail for Existing Supply Mains

I-30 Impact Head (With Swing Joint)

TABLE OF CONTENTS - Continued

LANDSCAPING

L-1 Tree and Shrub Planting

L-2 Tree Staking

L-3 Concrete Mowing Strip

MISCELLANEOUS

M-1 24" Manhole Frame and Cover - Heavy Duty

M-2 24" Manhole Frame and Cover - Light Duty.

M-3 36" Manhole Frame and Two Concentric Covers - Heavy Duty

M-4 Manhole Cover Locking Device

M-5.1 Chain Link Gate

M-6.1 Chain Line Fence

M-7 Metal Beam Guard Rail - Installation

M-8 Metal Beam Guard Rail - Details

M-9.1 Guard Post and Barricade

M-10 Street Survey Monument

M-11 Bench Mark - Brass Plug

M-12 Datums

M-13 Survey Monuments

M-14 Metric Equivalents

M-15 Joint Trench Utilities Location

M-16 Demountable Post

M-17 Tennis Court Fence - Chain Link

M-18 Drinking Fountain

M-19 Fire Hydrant Markers

SEWERAGE SYSTEMS

S-1.1 Manhole - 4'x2' Diameter

S-2.1 Manhole - 5'x3' Diameter

S-3 Sewer Main Cleanout

S-4.1 Pipe Bedding and Trench Backfill for Sewers (Standard Installation)

S-5.1 Pipe Bedding and Trench Backfill for Sewers (Rock to Springline)

S-6 Concrete Cradle

S-7.1 Concrete Encasement

S-8 Concrete Backfill

S-9.1 Concrete Anchor

S-10.1 Cutoff Wall

S-11 Concrete Protection for Existing Sewer Pipe

S-12 Concrete Support for Undercut Sewer Pipe

S-13 House Connection (Sewer Lateral)

S-14 Deep Cut House Connection (Sewer Lateral)

S-15 House Connection Sewer Repair

S-16 Cleanout - Force Main

S-17.1 Manhole - 4'x3' Diameter (for 15" Maximum Diameter Pipe)

S-18 Pipe Bedding & Backfill in Rock Envelope

WATER SYSTEMS

W-1 1" Water Service

W-2 1 1/2" and 2" Water Services

TABLE OF CONTENTS

CONCRETE STRUCTURES

C-2.1 Masonry Retaining Wall Types I & II (Sloping Backfill)

C-3.1 Masonry Retaining Wall Types III, IV & V, (Level Backfill)

C-7.1 General Notes for Masonry Retaining Walls

C-9 Gravity Retaining Walls

C-10 General Notes and Details for Gravity Retaining Walls

DRAINAGE SYSTEMS

D-1.1 Curb Inlet - Type A

D-2.1 Curb Inlet - Type B

D-3.1 Curb Inlet - Type C

D-4 Curb Inlet - Type D

D-5.1 Curb Inlet - Type D (Details)

D-6.1 Curb Inlet - Type E

D-7.1 Catch Basin - Type F

D-8.1 Curb Inlet - Type G

D-9 Storm Drain Cleanout - Type A

D-10 Storm Drain Cleanout - Type B

D-11 Inlets and Cleanouts - Notes and Details

D-12.1 Curb Inlet Opening

D-13 Welded Steel Grate Frame

D-14.1 Drainage Structure Grates - Types G1 & G2

D-15.1 Drainage Structure - Type G4

D-16 Corrugated Steel Pipe Inlets - Types A & B

D-17 Corrugated Steel Pipe Inlets - Details

D-18.1 Slotted Corrugated Steel Pipe Drains 12" through 24"

D-19 Slotted Drain Connections to Standard Inlets

D-20 Concrete Apron for Curb Inlet

D-22 Asphalt Concrete Spillway

D-23 Tapered Inlet and Downdrain Flume

D-24 Entrance Taper and Downdrain Pipe

D-25 Curb Outlet - Type A

D-27 Sidewalk Underdrain Pipe

D-28.1 Curb Inlet, Shallow - Type H

D-29.1 Catch Basin - Type I

D-30 Straight Headwall - Type A (Circular Pipe)

D-31 Straight Headwall - Type A (CSP - Arch)

D-32 Straight Headwall - Type B (Circular Pipe)

D-33 Straight Headwall - Type B (CSB - Arch)

D-34 Wing and U Type Headwalls for 12" to 36" Pipe

D-35 Wing and U Type Headwalls for 42" to 84" Pipe

D-36 L Type Headwalls - Circular Pipe

D-37 L Type Headwalls - CSP Arch

D-38 Curtain Wall

D-39.1 Inlet Apron for Culverts Up to 42" Diameter

TABLE OF CONTENTS - Continued

D-40.1 Rip Rap Energy Dissipator

D-41 Concrete Energy Dissipator

D-42 Concrete Energy Dissipator (Reinforcement) 18" to 30" Diameter Pipe

D-43 Concrete Energy Dissipator (Reinforcement) 36" to 72" Diameter Pipe

D-44 Pipe Culvert Headwalls, Endwalls and Warped Wingwalls

D-45 Curb Inlet - Type J Median

D-60.1 Pipe Bedding and Trench Backfill for Storm Drains

D-61 Rounded Pipe Ends in Drainage Structures

D-62 Pipe Collar

D-63 Concrete Lug

D-70 Minor Drainage Channel

D-71 Major Drainage Channel

D-72 Cutoff Wall for Drainage Channel

D-73 Pipe to Channel Connection

D-74 Graded Earth Channel

D-75.1 Drainage Ditches

D-76 Single Box Culvert

D-77 Double Box Culvert

D-78 Triple Box Culvert

D-79 Box Culvert Wingwall Types A, B and C

D-80.1 Box Culvert Warped Wingwalls

D-81.1 Box Culvert Miscellaneous Details

D-82 Debris Fence

ELECTRICAL SYSTEMS

E-1 Ornamental Street Light

E-2 Grounding of Concrete Lighting Standards

E-33 Pedestal for Electrical Equipment

GENERAL SURFACE IMPROVEMENTS

G-1 Curbs and Gutters - Separate

G-2 Curbs and Gutters - Combined

G-3.1 Monolithic Curb, Gutter and Sidewalk

G-4.1 Curb and Gutter - Rolled

G-5 Dikes (Berms) - Asphalt Concrete

G-6 Curbs and Gutter - Medians

G-7.1 Sidewalk - Typical Sections

G-9 Sidewalk Joint Locations

G-10 Concrete Joint Details

G-11 Portland Cement Concrete Curb, Gutter, Sidewalk & Pavement Removal and Replacement

G-12.1 Cross Gutter

G-13.1 Mid-Block Cross Gutter

G-14.1 Concrete Driveways

G-15 Driveway Location - Adjacent to Curb Returns and Street Lines

G-16 Driveway Location and Width Requirements

G-17 Alley Apron

TABLE OF CONTENTS - Continued

W-3	1" and 2" Manual Air Releases
W-4	1" and 2" Air and Vacuum Valves
W-5	4" and 6" Air and Vacuum Valves
W-6	2" Blow-Off Assemblies - Type A
W-7	2" Blow-Off Assemblies - Types B, C and D
W-8	4" and 6" Blow-Off Assemblies - Type A
W-9	4" and 6" Blow-Off Assemblies - Type B
W-10	6" Fire Hydrant
W-11.1	Fire Hydrant Locations
W-12	Valve Well Installation
W-13	Valve Stem Extension
W-14	Air and Vacuum Valve Enclosures
W-15	Meter Box Locations
W-16	Protection Post
W-17	Concrete Thrust Blocks
W-18	Thrust Block Bearing Areas
W-19	Concrete Valve Blocking
W-20	Anchor Block (Vertical Bend Only)
W-21.1	Pipe Bedding and Trench Backfill for Water Mains
W-22	Thrust Anchor for Water Main Reducer - 4" thru 6"
W-23	Multiple Service Assembly - Dead End Main
W-24	Split Butt Strap

SPECIAL NOTE

Concrete consisting of portland cement, concrete aggregate, sand and water is designated in these Standard Drawings by a symbol consisting of a number, a letter and a number; for example, 560-C-3250. The first number is the weight of cement in pounds per cubic yard, the last number is the compressive strength at twenty-eight days and the letter indicates the grading of the aggregate. This designation is in the STANDARD SPECIFICATIONS FOR PUBLIC WORKS CONSTRUCTION, published by the Building News, Incorporated.

The concrete designations as shown on the following drawing are changed as follows:

C-10	560-C-3250
D-4	560-C-3250
D-9	560-C-3250
D-10	560-C-3250
D-11	560-C-3250
D-20	520-C-2500
D-25	560-C-3250
D-27	520-C-2500
D-30	560-C-3250
D-31	560-C-3250
D-32	560-C-3250
D-33	560-C-3250
D-34	560-C-3250
D-35	560-C-3250
D-36	560-C-3250
D-37	560-C-3250
D-38	560-C-3250
D-39.1	560-C-3250
D-41	560-C-3250
D-62	560-C-3250
D-70	560-C-3250
D-71	560-C-3250
D-72	560-C-3250
D-73	560-C-3250
E-1	560-C-3250
E-33	560-C-3250
G-1	520-C-2500
G-2	520-C-2500
G-3.1	520-C-2500
G-6	520-C-2500
G-7.1	520-C-2500
G-14.1	520-C-2500
G-17	560-C-3250
G-18	560-C-3250
G-19	560-C-3250
G-20	560-C-3250
G-21	560-C-3250
G-22	520-C-2500
G-23	560-C-3250
G-25.1	560-C-3250
G-26	520-C-2500
I-17.1	560-C-3250
L-3	520-C-2500
M-10	560-C-3250
S-1.1	560-C-3250
S-2.1	560-C-3250
S-3	560-C-3250
S-12	560-C-3250
S-16	560-C-3250 - Slab
S-17.1	560-C-3250

CONCRETE STRUCTURES

TYPE I WALL

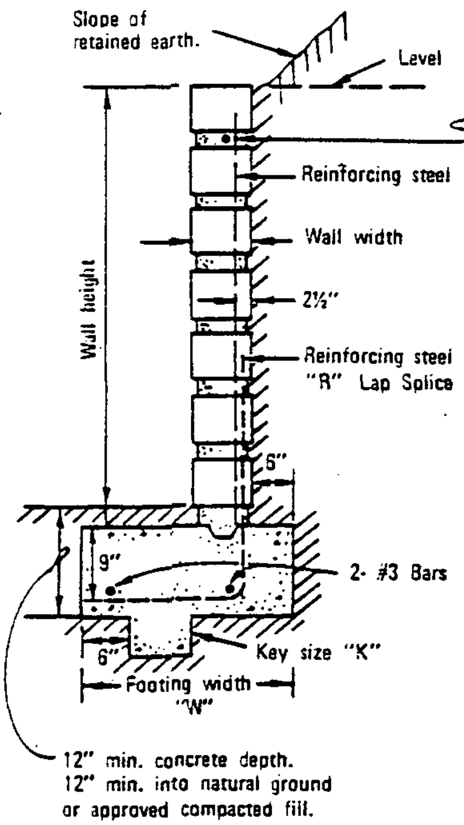

Horizontal Steel (see note 2)

TYPE II WALL

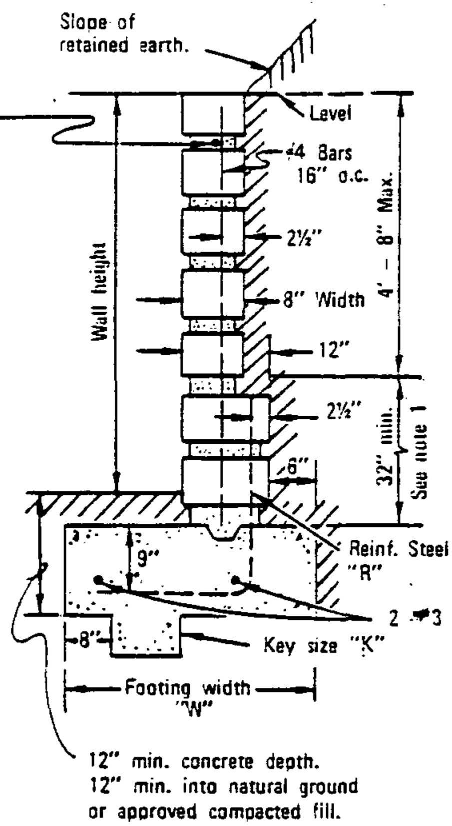

WALL TYPE "T"		
A.	Type I	6" Width
B.	Type I	8" Width
C.	Type II	(Note 1.)
REINFORCING STEEL "R"		
1.	# 3 Bars @ 24" o/c	
2.	# 4 Bars @ 32" o/c	
3.	# 3 Bars @ 16" o/c	
4.	# 4 Bars @ 24" o/c	
5.	# 4 Bars @ 16" o/c	
6.	# 5 Bars @ 16" o/c	
KEY SIZE "K"	Width x Depth	
D.	6" x 6"	
E.	8" x 8"	
F.	12" x 12"	
G.	12" x 18"	
N.	None Required	

Wall Height	SLOPE OF RETAINED EARTH .... HORIZONTAL RUN TO VERTICAL RISE: Level				5 to 1				4 to 1				3 to 1				2 to 1				1½ to 1				1 to 1			
	T	R	K	W	T	R	K	W	T	R	K	W	T	R	K	W	T	R	K	W	T	R	K	W	T	R	K	W
1' – 4"	A	1	N	1' – 4"	A	1	N	1' – 4"	A	1	N	1' – 4"	A	1	N	1' – 4"	A	1	N	1' – 4"	A	1	N	1' – 6"	A	1	D	1' – 7"
2' – 0"	A	1	N	1' – 4"	A	1	N	1' – 4"	A	1	N	1' – 4"	A	1	N	1' – 4"	A	1	N	1' – 4"	A	1	D	1' – 8"	A	1	D	1' – 10"
2' – 8"	A	1	N	2' – 0"	A	1	N	2' – 0"	A	1	N	2' – 0"	A	1	N	2' – 0"	A	1	D	2' – 0"	A	1	E	2' – 2"	A	1	F	2' – 5"
3' – 4"	A	1	N	2' – 1"	A	1	N	2' – 1"	A	1	N	2' – 1"	A	1	D	2' – 1"	A	3	D	2' – 1"	B	1	E	2' – 4"	B	4	F	2' – 4"
4' – 0"	A	3	N	2' – 4"	B	1	N	2' – 3"	B	1	N	2' – 3"	B	1	D	2' – 3"	B	1	D	2' – 3"	B	4	F	2' – 5"	C	4	G	3' – 4"
4' – 8"	B	4	D	2' – 9"	B	4	D	2' – 9"	B	5	E	2' – 9"	B	5	E	2' – 9"	B	5	F	2' – 9"	C	5	G	3' – 5"				
5' – 4"	B	5	D	3' – 0"	C	4	D	3' – 0"	C	4	E	3' – 0"	C	4	E	3' – 0"	C	4	F	3' – 2"	C	5	G	3' – 9"				
6' – 0"	C	4	E	3' – 3"	C	4	E	3' – 3"	C	4	E	3' – 4"	C	5	E	3' – 4"	C	5	F	3' – 6"	C	6	G	4' – 2"				
6' – 8"	C	5	E	3' – 9"	C	5	F	3' – 10"	C	6	F	3' – 10"	C	6	G	3' – 11"	C	6	G	4' – 1"								
8' – 0"	C	6	G	4' – 6"																								

Footing sizes are based on 1000 lb. per square foot maximum soil bearing value.

NOTES:

1. When wall Type II is required, the first four courses of block, regardless of wall height, shall consist of 12" wide masonry units.
2. Horizontal Steel – Two # 3 bars shall be placed longitudinally in the footing as shown. One # 3 bar or ladder mesh shall be placed longitudinally in the mortar joint every 16 inches as the blocks are laid up.
3. See Standard Drawing C–7.1 for additional requirements.

RECOMMENDED BY THE SAN DIEGO REGIONAL STANDARDS COMMITTEE

[signature] Dec. 1975
Coordinator R.C.E. 13807 Date

SAN DIEGO REGIONAL STANDARD DRAWING

Revision	By	Approved	Date
New Des.	[initials]	M.3.	10-82

MASONRY RETAINING WALL TYPE I & TYPE II (SLOPING BACKFILL)

DRAWING NUMBER C-2.1

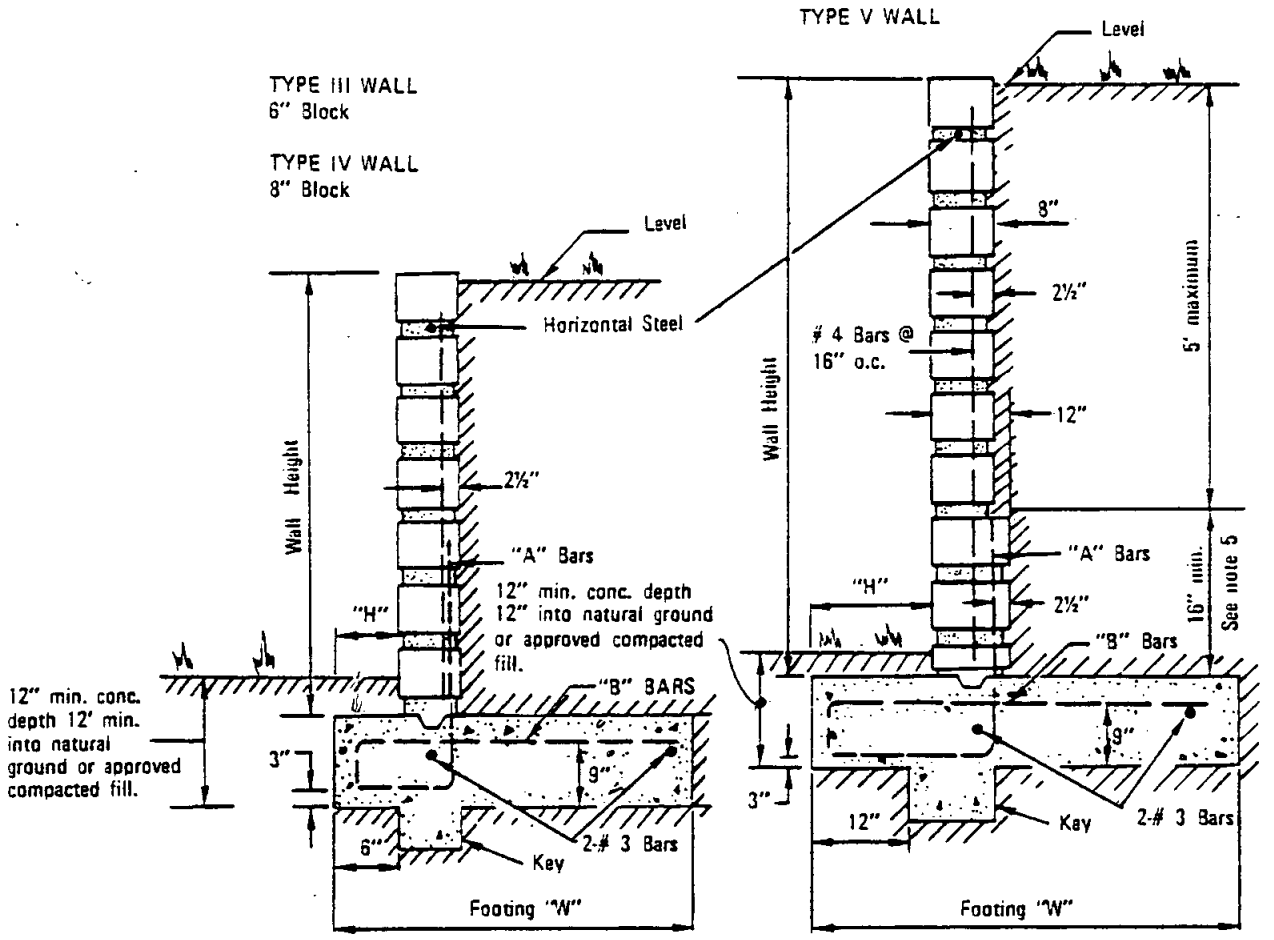

Wall Height	Wall Type	H	Footing W	Key Size	"A" Bars	"B" Bars
1'– 4"	III	3"	1'– 6"	None	# 3 @ 32" o/c	None
2'– 0"	III	3"	1'– 6"	None	# 3 @ 24" o/c	None
2'– 8"	III	3"	2'– 0"	None	# 3 @ 24" o/c	# 3 @ 48" o/c
3'– 4"	III	3"	2'– 3"	None	# 3 @ 24" o/c	# 3 @ 48" o/c
4'– 0"	III	3"	2'– 6"	None	# 3 @ 16" o/c	# 3 @ 32" o/c
4'– 8"	IV	6"	3'– 6"	None	# 4 @ 24" o/c	# 4 @ 24" o/c
5'– 4"	IV	8"	4'– 0"	6"x 6"	# 4 @ 16" o/c	# 4 @ 24" o/c
6'– 0"	V	8"	4'– 6"	8"x 8"	# 4 @ 24" o/c	# 4 @ 24" o/c
6'– 8"	V	1'–1"	5'– 0"	8"x 8"	# 4 @ 16" o/c	# 4 @ 16" o/c
8'– 0"	V	1'–8"	5'– 2"	12"x 12"	# 5 @ 16" o/c	# 4 @ 16" o/c

NOTES:

1. Footing sizes are based on 1000 lbs. per square foot maximum soil bearing value.
2. Wall height is measured from the top of the footing to the top of the wall. Walls not shown in the table above, must be designed specifically for the existing condition.
3. The walls shown here are designed as walls retaining level earth for a distance equal to wall height.
4. See Standing Drawing C–7.1 for additional requirements.
5. When wall Type V is required, the lower 16" of wall height is required to consist of 12" width masonry units.
6. Horizontal Steel: # 3 bars shall be placed longitudinally in the footing as shown. # 3 bars or ladder mesh shall be placed longitudinally in the mortar joint every sixteen inches as the blocks are laid up.

Revision	By	Approved	Date
New Des.	TRP	M.B.	10-92

SAN DIEGO REGIONAL STANDARD DRAWING

MASONRY RETAINING WALL TYPES III IV & V (LEVEL BACKFILL)

RECOMMENDED BY THE SAN DIEGO REGIONAL STANDARDS COMMITTEE

Coordinator R.C.E. 19607 — Dec. 1975 Date

DRAWING NUMBER C-3.1

INSPECTIONS Call for inspections as follows:

A. When the footing has been formed, with the steel tied securely in final position, and is ready for the concrete to be placed.

B. Where cleanout holes are not provided:

(1) After the blocks have been laid up to a height of 4', or full height for walls up to 5', with the steel in place but before the grout is poured, and....

(2) After the first lift is properly grouted, the blocks have been laid up to the top of the wall with the steel tied securely in place but before the upper lift is grouted.

Where cleanout holes are provided:

After the blocks have been laid up to the top of the wall, with the steel tied securely in place, but before grouting.

C. After grouting is complete and after rock or rubble wall drains are in place but before earth backfill is placed.

D. Final inspection when all work has been completed.

CONCRETE GROUT AND MORTAR MIXES Concrete grout and mortar mixes shall be as specified in the "Standard Specifications For Public Works Construction".
All cells shall be filled with grout. Rod or vibrate grout within 10 minutes of pouring to insure consolidation. Bring grout to a point 2" from the top of masonry units when grouting of second lift is to be continued at another time.

MORTAR KEY To insure proper bonding between the footing and the first course of block, a mortar key shall be formed by embedding a flat 2 x 4 flush with and at the top of the freshly poured footing. The 2 x 4 should be removed after the concrete has started to harden (approximately 1 hour).
A mortar key may be omitted if the first course of block is set into the fresh concrete when the footing is poured, and a good bond is obtained.

FENCING Safety fencing shall be installed at top of the wall as required by the Agency.

WALL DRAINS Wall drains shall be provided at 6 foot intervals along the length of the wall and located at the level of the bottom course of block.
The drains shall be 4" in diameter, formed by placing a block on its side, or leaving out every head joint in the first course of block.
Backfill behind wall drains or open head joints shall be loose rubble or gravel.

SOIL All footings shall extend at least 12" into undisturbed natural soil or approved compacted fill. Soil should be dampened prior to placing concrete in footings.

STEEL LAP When one continuous bar cannot be used, a lap or splice of thirty bar diameters shall be used.

CONCRETE Footing concrete shall be 560-C-3250, using B aggregate when placing conditions permit.

Revision	By	Approved	Date
New Des.	TRP	M. B.	10-92

SAN DIEGO REGIONAL STANDARD DRAWING

GENERAL NOTES FOR MASONRY RETAINING WALLS

RECOMMENDED BY THE SAN DIEGO REGIONAL STANDARDS COMMITTEE

Coordinator R.C.E. 19807 Dec. 1975 Date

DRAWING NUMBER C-7.1

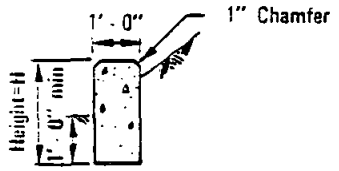

TYPE–A WALL
(Applicable for all types of backfill loadings)

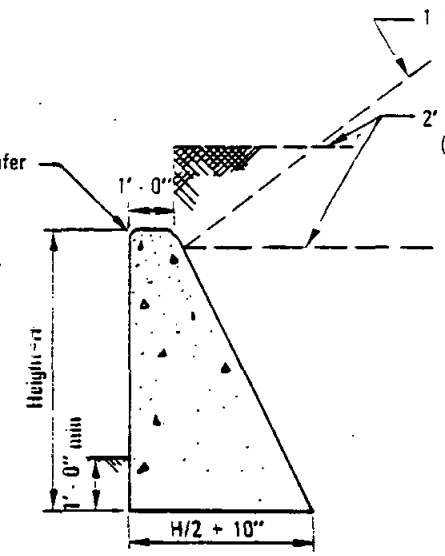

TYPE–B WALL

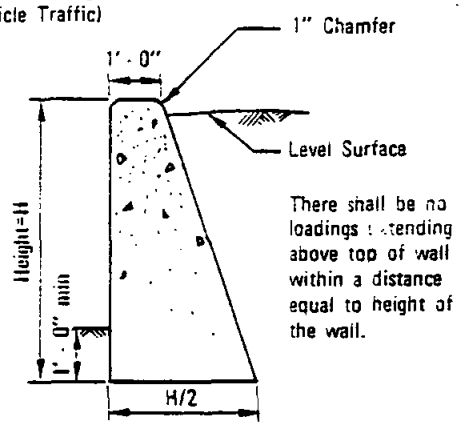

There shall be no loadings extending above top of wall within a distance equal to height of the wall.

TYPE–C WALL

WALL TYPE	HEIGHT	BASE	CONC CF/FT
A	1' - 6"	1' - 0"	1.50
	2' - 0"	1' - 0"	2.00
B	3' - 0"	2' - 4"	4.99
	4' - 0"	2' - 10"	7.66
	5' - 0"	3' - 4"	10.82
	6' - 0"	3' - 10"	14.49
C	3' - 0"	1' - 6"	3.75
	4' - 0"	2' - 0"	6.00
	5' - 0"	2' - 6"	8.75
	6' - 0"	3' - 0"	12.00

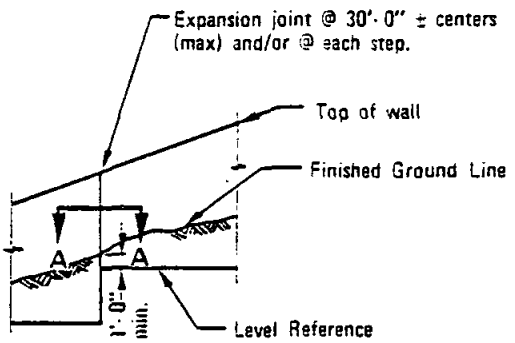

TYPICAL ELEVATION

NOTE
See Standard Drawing C-10 for Section A–A, notes and details.

Revision	By	Approved	Date

SAN DIEGO REGIONAL STANDARD DRAWING

GRAVITY RETAINING WALLS

RECOMMENDED BY THE SAN DIEGO REGIONAL STANDARDS COMMITTEE

Coordinator R.C.E. 19807 — Dec. 1975 Date

DRAWING NUMBER C-9

CONCRETE

Concrete shall be 564 - C - 3000.

DESIGN CONDITIONS

Walls are to be used for the loading conditions shown for each type wall. Design H may be exceeded by six inches before going to next size.

DESIGN DATA

Fc = 1200 psi F'c = 3000 psi
Earth = 120 pcf and equivalent fluid pressure = 36 psf per foot of height

Walls shown for 1 1/2:1 unlimited sloping surcharge are designed in accordance with Rankine's Formula for unlimited sloping surcharge with ϕ = 33° 42'.
Note: Maximum toe pressure under wall footing = 1 1/2 tons. Special design required where footing material is incapable of supporting this pressure.

EXCAVATION AND BACKFILL

Compaction of backfill material by jetting or ponding with water will not be permitted.

Each layer of backfill shall be moistened as directed by the Engineer and thoroughly tamped, rolled or otherwise compacted until the relative compaction is not less than 90 percent.

No backfill material shall be deposited against concrete retaining walls until the concrete has developed a strength of 2,500 pounds per square inch in compression as determined by test cyclinders, or until 28 days after wall has been placed.

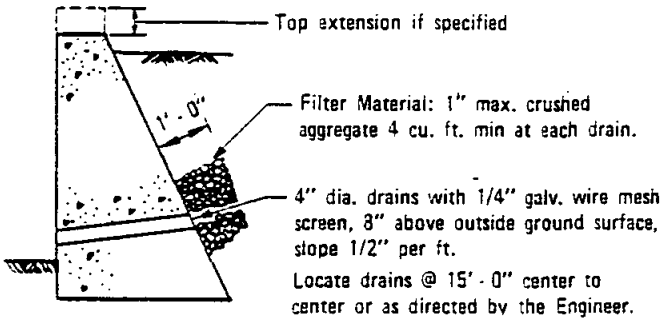

TYPICAL DRAINAGE
WHEN H IS GREATER THAN 4' - 0"

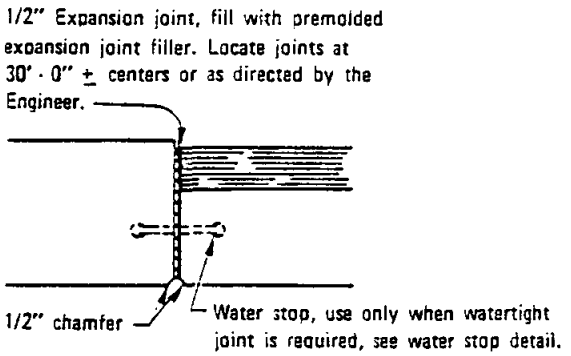

SECTION A–A

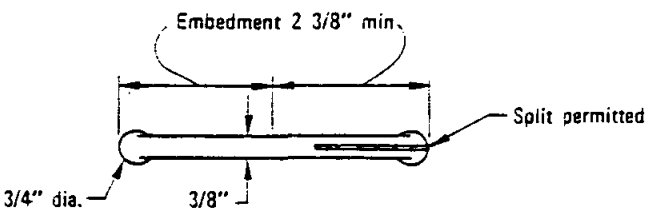

RUBBER WATERSTOP
Use only when watertight joint is required.

RECOMMENDED BY THE SAN DIEGO REGIONAL STANDARDS COMMITTEE Coordinator R.C.E. 19807 Date Dec. 1975	SAN DIEGO REGIONAL STANDARD DRAWING	Revision	By	Approved	Date
	GENERAL NOTES AND DETAILS FOR GRAVITY RETAINING WALLS				
DRAWING NUMBER C-10					

DRAINAGE SYSTEMS

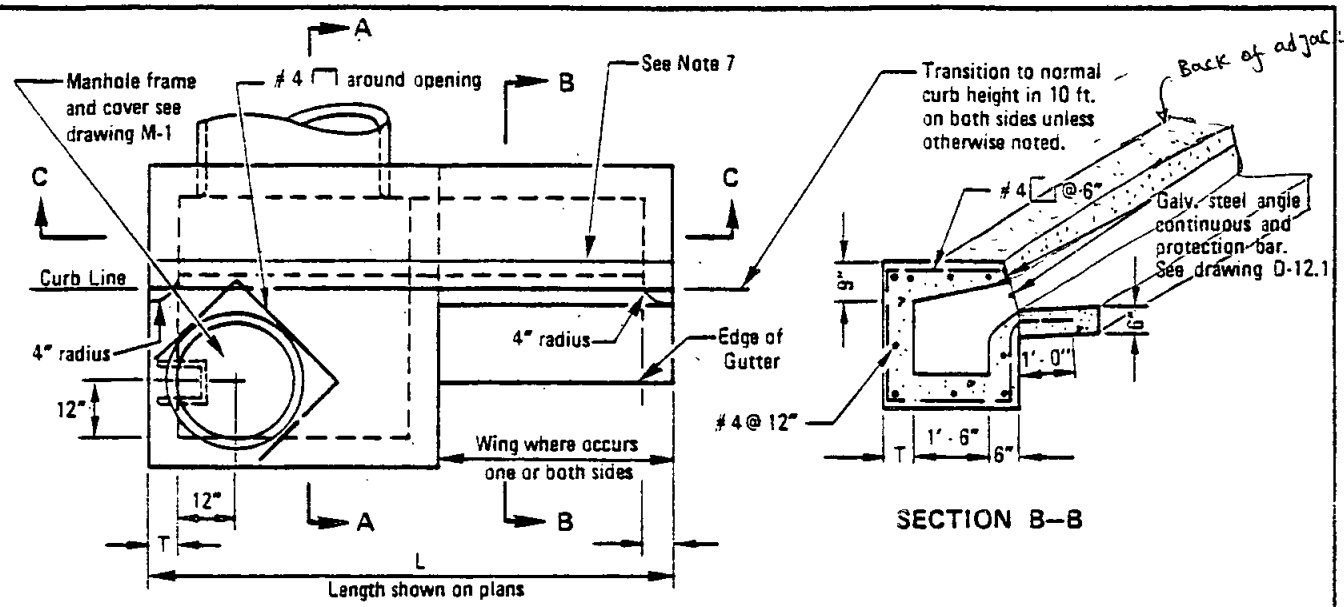

PLAN

SECTION B–B

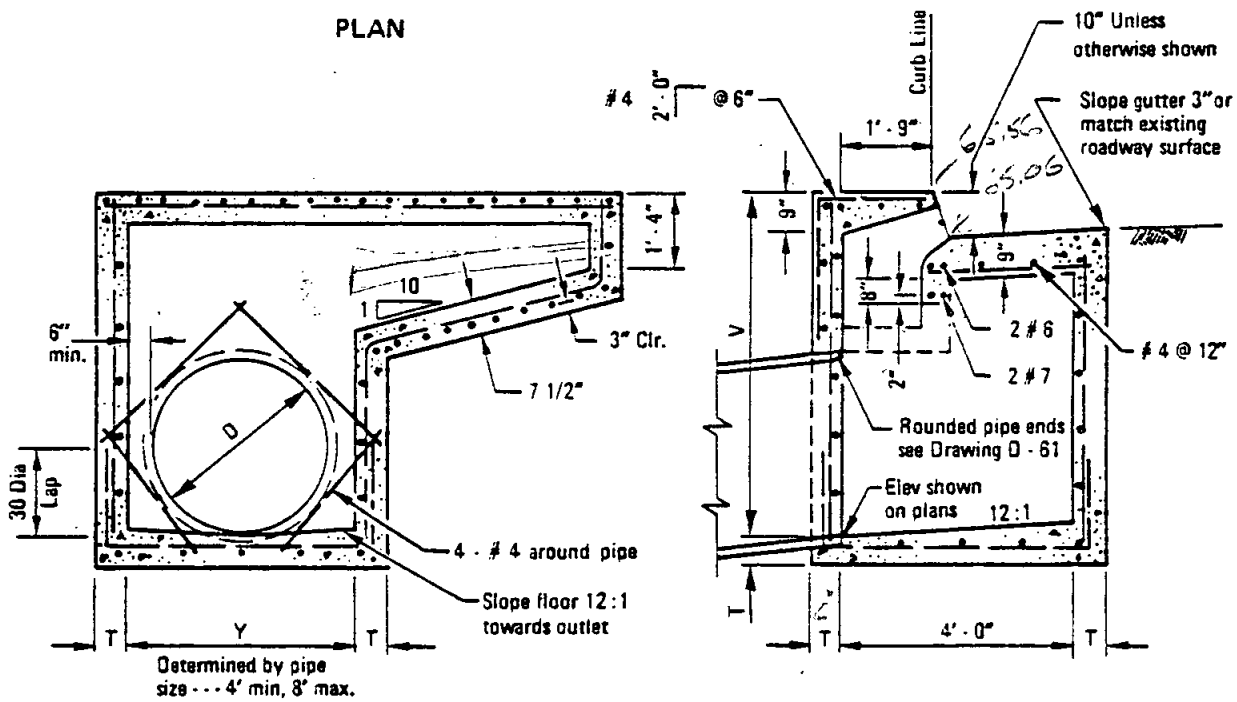

SECTION C–C

SECTION A–A

NOTES:

1. See Standard Drawings D-11 & D-12.1 for additional notes and details.
2. Types are designated as follows: (no wing) A, (one wing) A-1, (two wings) A-2.
3. Exposed edges of concrete shall be rounded with a radius of 1/2".
4. When V exceeds 4' steps shall be installed. See Standard Drawing D-11 for details.
5. Concrete gutter to match adjacent gutters.
6. An expansion joint shall be placed at the ends of the inlet where the curb is to adjoin.
7. Provide 1/4" tooled groove in top slab in line with back of adjacent curb.
8. Surface of top slab shall be sidewalk finished to drain toward street at a slope of 1/4" per foot.
9. Maintain 1 1/2" clear spacing between reinforcing and surface unless otherwise noted.

LEGEND ON PLANS

15' Type A-1 inlet

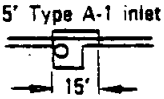

Revision	By	Approved	Date
Reference	TRP	M.B.	10-82

SAN DIEGO REGIONAL STANDARD DRAWING

CURB INLET - TYPE A

RECOMMENDED BY THE SAN DIEGO REGIONAL STANDARDS COMMITTEE

Coordinator R.C.E. 19807 — Dec. 1975 Date

DRAWING NUMBER D-1.1

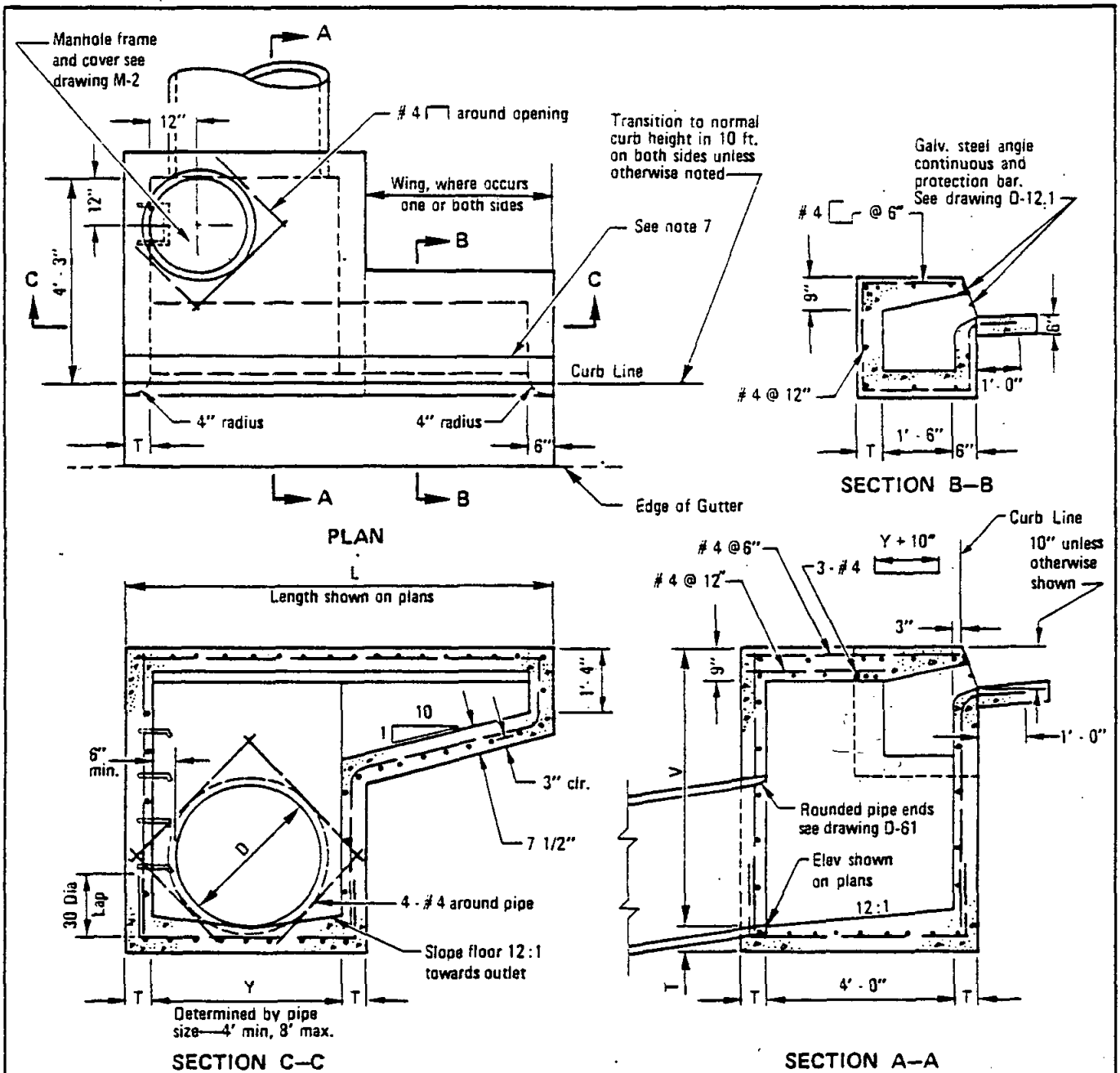

NOTES:

1. See Standard Drawings D-11 & D-12.1 for additional notes and details.
2. Types are designated as follows: (no wing) B, (one wing) B-1, (two wings) B-2.
3. Exposed edges of concrete shall be rounded with a radius of 1/2".
4. When V exceeds 4' steps shall be installed. See Standard Drawing D-11 for details.
5. Concrete gutter to match adjacent gutters.
6. An expansion joint shall be placed at the ends of the inlet where the curb is to adjoin.
7. Provide 1/4" tooled groove in top slab in line with back of adjacent curb.
8. Surface of top slab shall be sidewalk finished to drain toward street at a slope of 1/4" per foot.
9. Maintain 1 1/2" clear spacing between reinforcing and surface unless otherwise noted.

LEGEND ON PLANS

15' Type B-1 inlet

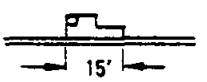

RECOMMENDED BY THE SAN DIEGO REGIONAL STANDARDS COMMITTEE Dec. 1975 Coordinator R.C.E. 19807 Date	SAN DIEGO REGIONAL STANDARD DRAWING	Revision	By	Approved	Date
		Notes		D.S.	7-79
		Reference	TRP	M.B.	10-82
DRAWING NUMBER D-2.1	CURB INLET - TYPE B				

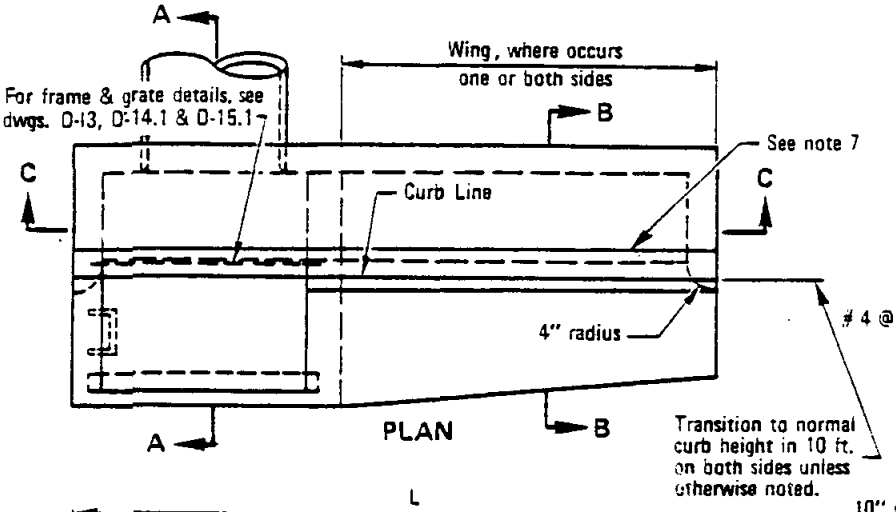

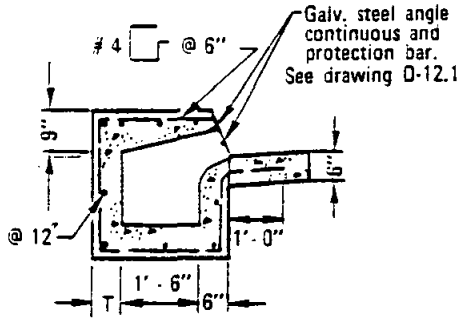

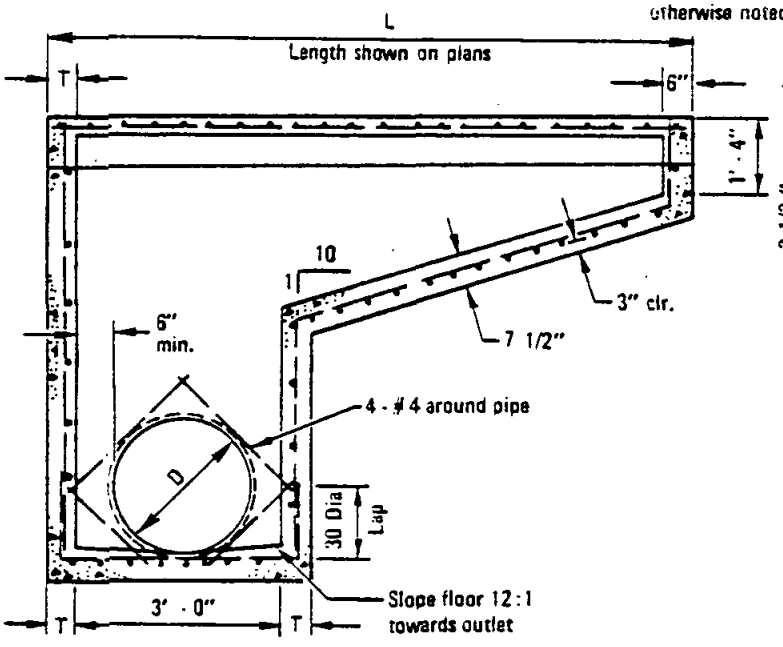

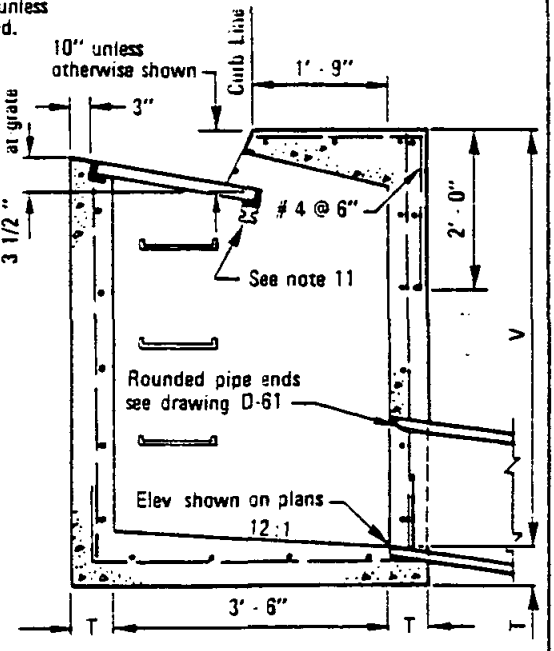

NOTES:

1. See Standard Drawings D-11 through D-15.1 for additional notes and details.
2. Types are designated as follows: (no wing) C, (one wing) C-1, (two wings) C-2.
3. Exposed edges of concrete shall be rounded with a radius of 1/2".
4. When V exceeds 4 ft. steps shall be installed. See Standard Drawing D-11 for details.
5. Concrete gutter to match adjacent gutters.
6. An expansion joint shall be placed at the ends of the inlet where the curb is to adjoin.
7. Provide 1/4" tooled groove in top slab in line with back of adjacent curb.
8. Surface of top slab shall be sidewalk finished to drain toward street at a slope of 1/4" per foot.
9. Maintain 1 1/2" clear spacing between reinforcing and surface unless otherwise noted.
10. Where inlet is to be constructed on grade and Standard Drawing D-20 concrete apron is required, lift down-grade end of grate as shown on D-20.
11. When G-1 & G-2 grates are used place 3"-5.7 lb. steel I-beam, 3.5' long.

LEGEND ON PLANS

15' Type C-1 Inlet

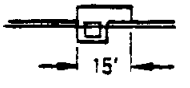

Revision	By	Approved	Date
Notes		O.S.	7-79
Reference	TRP	M.B.	10-82

SAN DIEGO REGIONAL STANDARD DRAWING

CURB INLET - TYPE C

RECOMMENDED BY THE SAN DIEGO REGIONAL STANDARDS COMMITTEE

Coordinator R.C.E. 19807 — Dec. 1975 Date

DRAWING NUMBER D-3.1

DIMENSIONS

T = 8" if V is less than 8'.
T = 10" if V is 8' or more.
V = 5' unless otherwise specified.
V = O + 32" minimum.
W = 7' unless otherwise specified.
Y = 5' unless otherwise specified.
Width of driveway, W, shall be 10' unless otherwise specified.
Elevation of point N shall be 13" below point H unless otherwise specified.

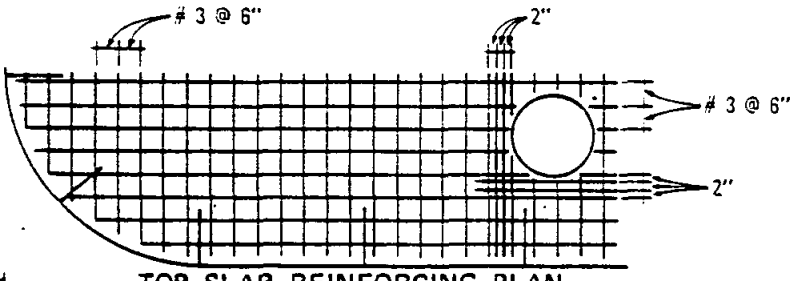

TOP SLAB REINFORCING PLAN

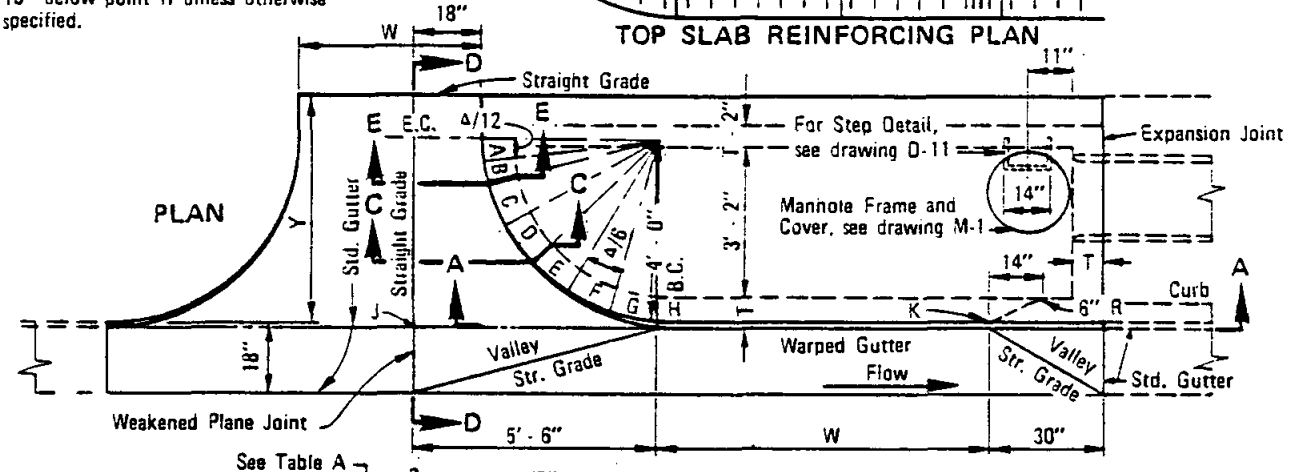

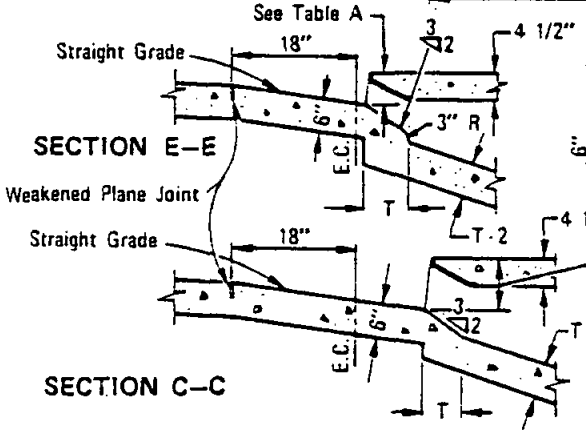

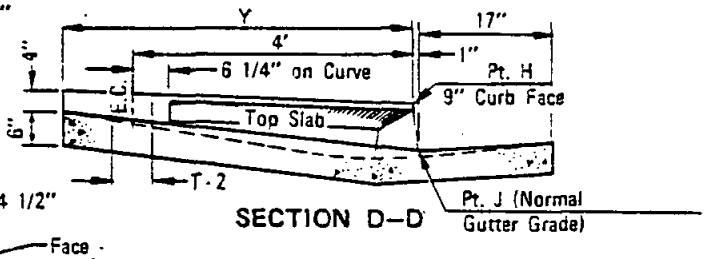

PT	A	B	C	D	E	F	G	H	K	M
F.C.	4½"	5¼"	6"	7½"	9"	9"	9"	9"	9"	8"

TABLE A

NOTES

1. Steel Plate should be of one continuous piece with curve portion a circular arc. Length = Width + 18" + circular arc.
2. # 4 rebar 30" long, 1' O.C. shall be installed in top of walls for ties to top and gutters.
3. The reinforcing steel in the top slab shall be # 3 bars 6" O.C. unless otherwise specified. Clearance shall be 1 1/2" from the bottom of the slab.
4. Concrete for the inlet too to be placed at the same time as the s/w curb and gutter.
5. Concrete shall be 564 - C - 3000.
6. Exposed edges of concrete shall be rounded with a radius of 1/2".
7. Surface of top slab shall be sidewalk finished to drain toward street at a slope of 1/4" per foot.

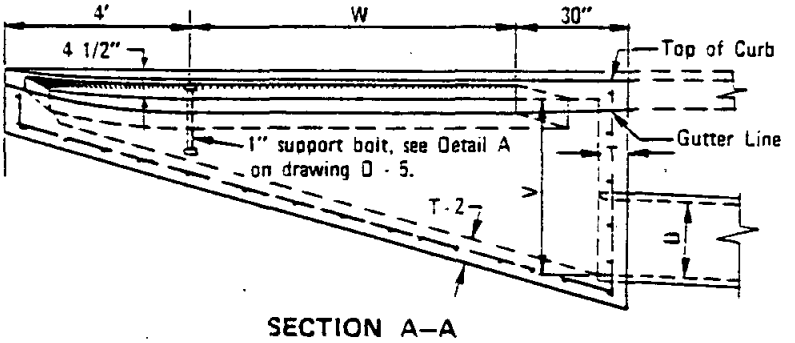

RECOMMENDED BY THE SAN DIEGO REGIONAL STANDARDS COMMITTEE

Coordinator R.C.E. 19807 Date Dec. 1975

DRAWING NUMBER D-4

SAN DIEGO REGIONAL STANDARD DRAWING

CURB INLET - TYPE D

Revision	By	Approved	Date

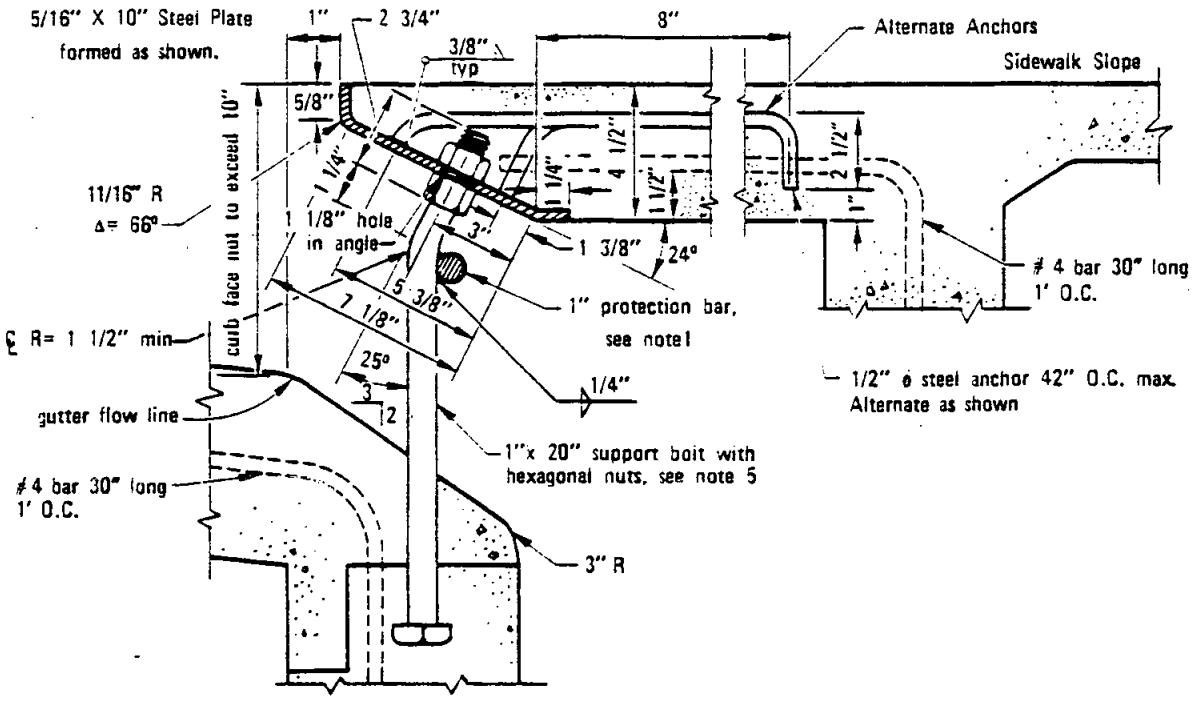

DETAIL–A

NOTES

1. A plain, round steel protection bar 1" in dia. shall be installed. Bar shall be embedded 5" at each end.
2. Leave 8" hole blocked out in bottom placing of concrete for bolts placed at same time as gutter.
3. All exposed metal parts shall be galvanized.
4. All galvanizing damaged by welding shall receive two coats of aluminum paint.
5. Support bolts shall be spaced at not more than 5' - 0" O.C.
6. Adjusting nuts to be tightened and secured in place when steel plate is in proper position.

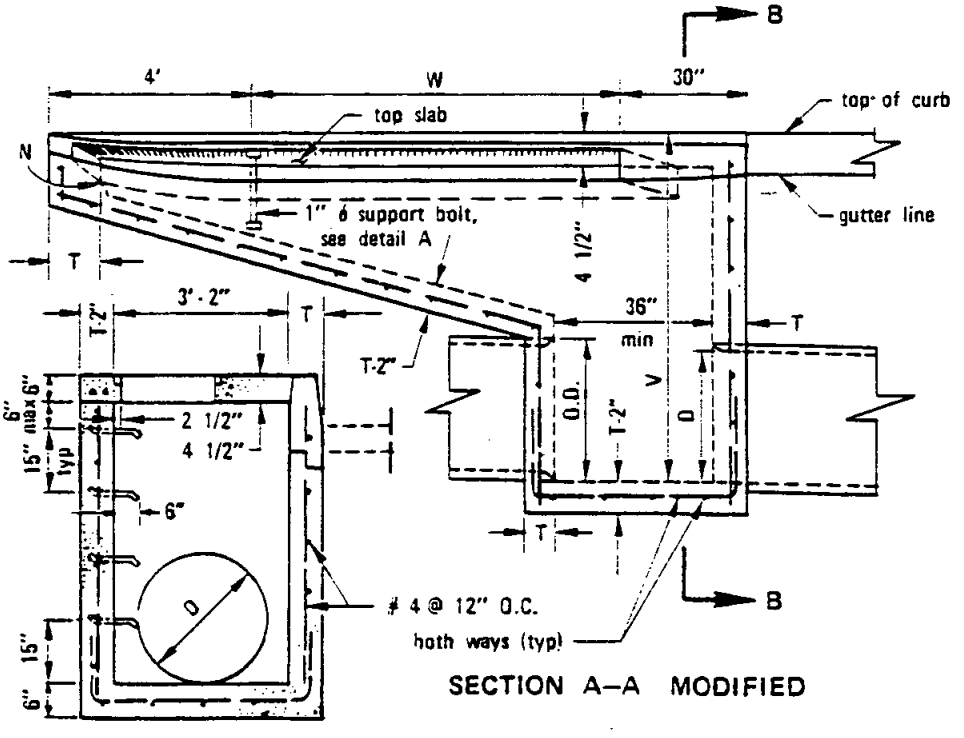

SECTION A–A MODIFIED

SECTION B–B

Revision	By	Approved	Date
Rebar	TCK	M.S.	10-82

SAN DIEGO REGIONAL STANDARD DRAWING

CURB INLET - TYPE D (DETAILS)

RECOMMENDED BY THE SAN DIEGO REGIONAL STANDARDS COMMITTEE

Coordinator R.C.E. 19807 — Dec. 1975 Date

DRAWING NUMBER D-5.1

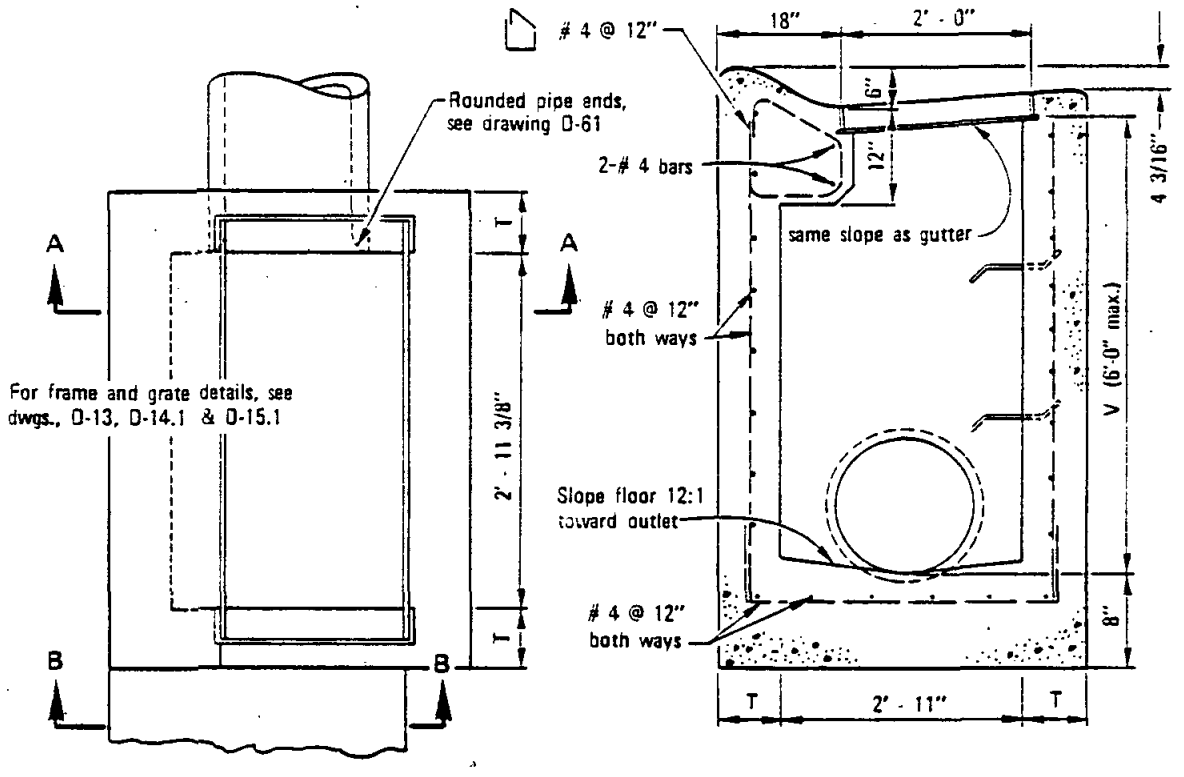

PLAN

SECTION A–A

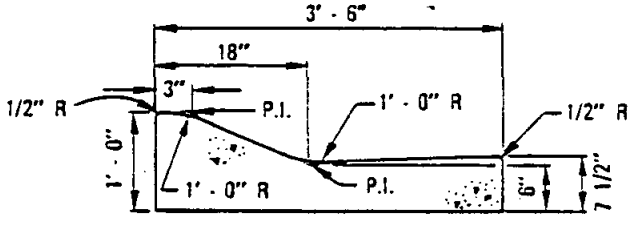

SECTION B–B

NOTES

1. See Standard Drawing D-11 for dimension T and additional notes and details.
2. When V exceeds 4', steps shall be installed. See Standard Drawing D - 11 for details.
3. Exposed edges of concrete shall be rounded with a radius of 1/2".
4. Maintain 1 1/2" clear spacing between reinforcing and surface.
5. Type E inlet to be used only with rolled curb. See Standard Drawing G-4.1
6. Transition 10' to curb Section B-B at inlet, both sides.

LEGEND ON PLANS

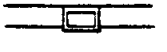

RECOMMENDED BY THE SAN DIEGO REGIONAL STANDARDS COMMITTEE

Coordinator R.C.E. 19807 — Dec. 1975 Date

SAN DIEGO REGIONAL STANDARD DRAWING

CURB INLET - TYPE E

DRAWING NUMBER D-6.1

Revision	By	Approved	Date
Reference	TRP	M.B.	10-92

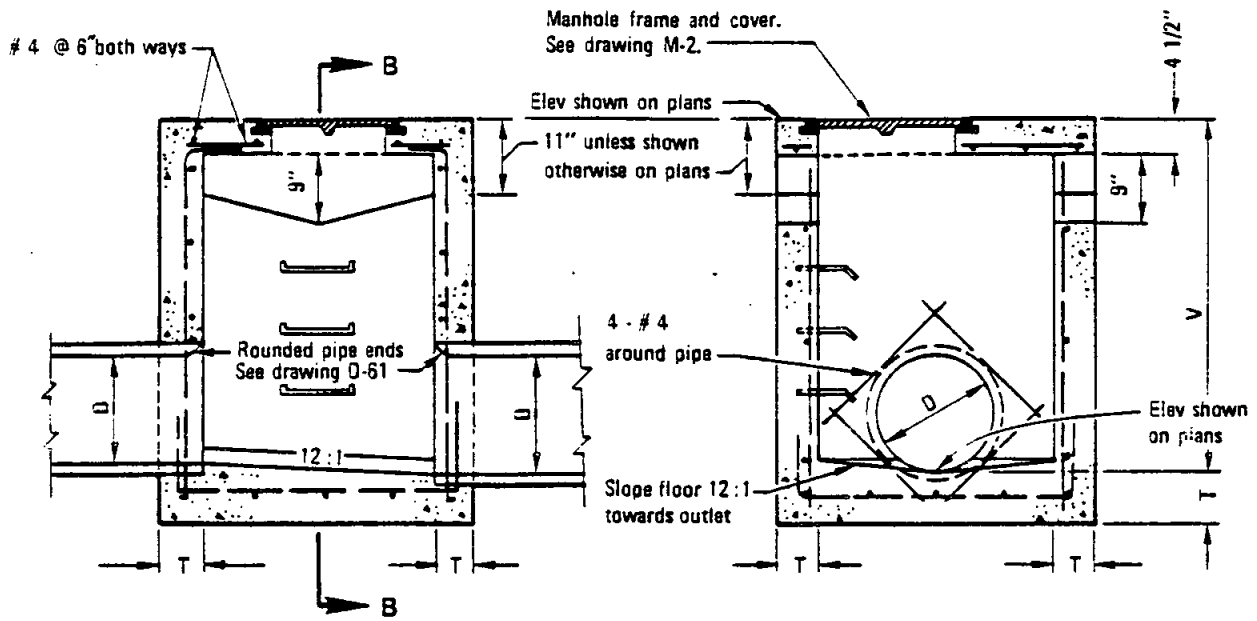

SECTION A–A

SECTION B–B

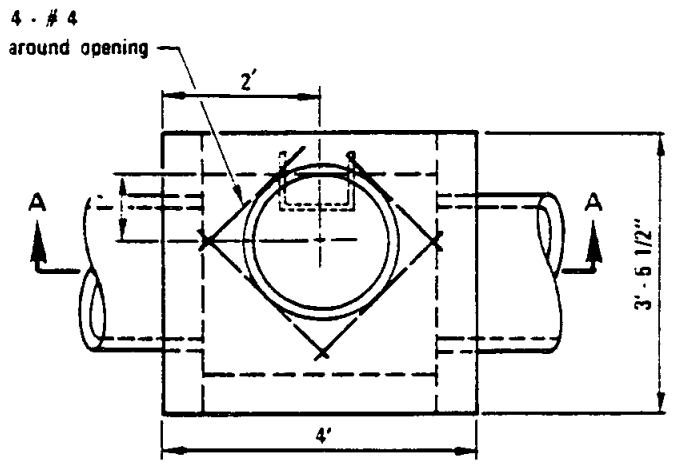

PLAN

NOTES

1. See Standard Drawing D-11 for additional notes and details.
2. When V exceeds 4' steps shall be installed. See Standard Drawing D-11 for details.
3. Exposed edges of concrete shall be rounded with a radius of 1/2".
4. Openings on both sides unless otherwise shown on plans.
5. Maintain 1 1/2" clear spacing between reinforcing and surface.

LEGEND ON PLANS

Revision	By	Approved	Date
Rebar	TKF	M.B.	10-72

SAN DIEGO REGIONAL STANDARD DRAWING

CATCH BASIN - TYPE F

RECOMMENDED BY THE SAN DIEGO REGIONAL STANDARDS COMMITTEE

Coordinator R.C.E. 19807 — Dec. 1975 Date

DRAWING NUMBER D-7.1

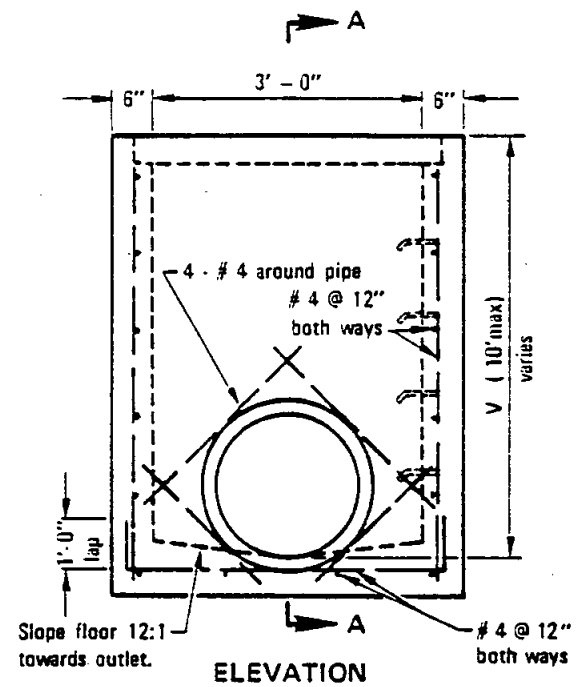

ELEVATION

NOTES

1. See Standard Drawing D-11 for additional notes and details.
2. When V exceeds 4', steps shall be installed. See Standard Drawing D-11 for details.
3. Maintain 1 1/2" clear spacing between reinforcing and surface.
4. Increase in allowable depth subject to approval by Agency.
5. Section A–A shows 3 sizes and shall not imply that an interior wall is to be built for the structures with double or triple frame and grate.
6. Exposed edges of concrete shall be rounded with a radius of 1/2".
7. Designate types as follows: Single G-1, Double G-2 and Triple G-3.
8. Only end bearing grates shall be used, Types G-3 and G-4. See Standard Drawing D-14.1 and D-15.1

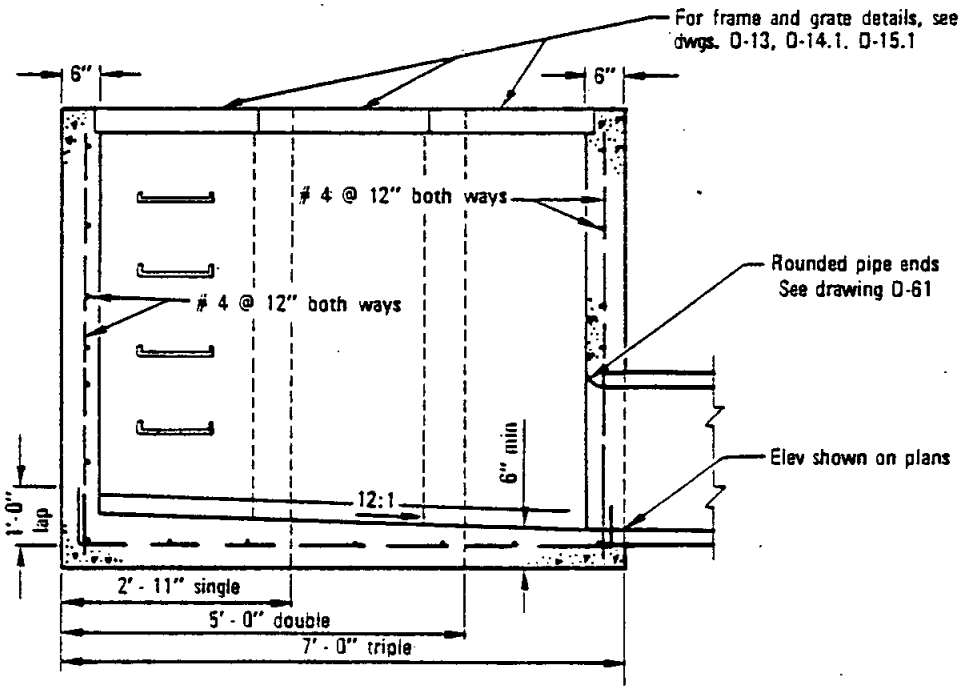

SECTION A–A

LEGEND ON PLANS

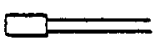

RECOMMENDED BY THE SAN DIEGO REGIONAL STANDARDS COMMITTEE Coordinator R.C.E. 19807 Dec. 1975 Date	SAN DIEGO REGIONAL STANDARD DRAWING	Revision	By	Approved	Date
		Reference	TRD	M.B.	10-82
DRAWING NUMBER D-8.1	CATCH BASIN - TYPE G				

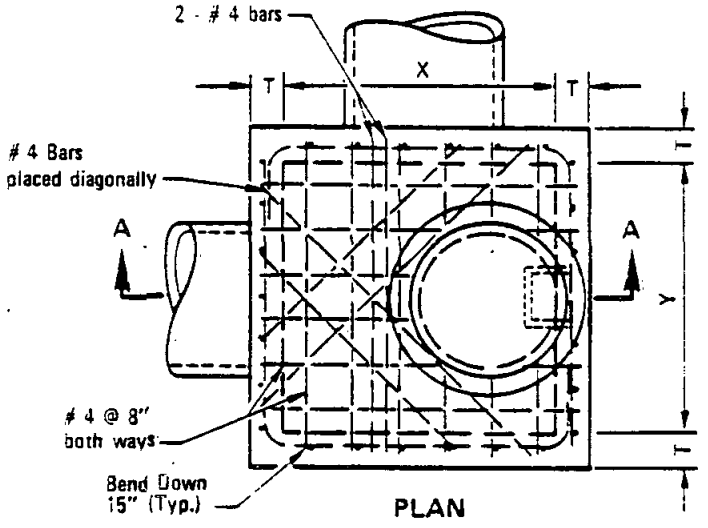

PLAN

TYPE	PIPE DIA	X	Y	Z
A 4	up to 39"	4'	4'	6'
A 5	42" to 48"	5'	4'	6'
A 6	51" to 60"	6'	4'	6'
A 7	63" to 72"	7'	4'	7'
A 8	75" to 84"	8'	4'	8'

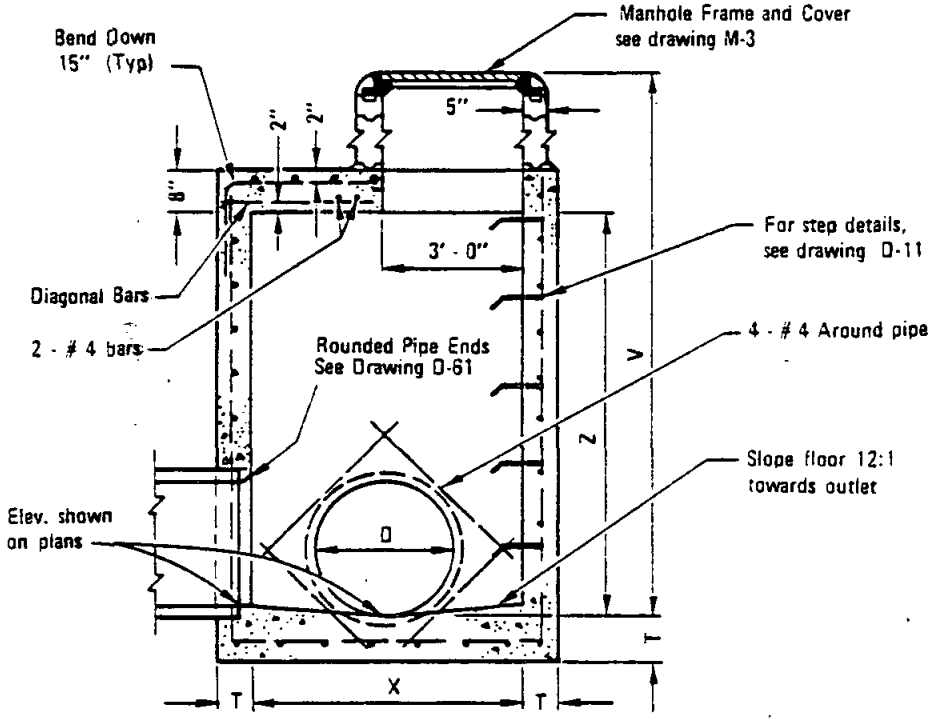

SECTION A—A

NOTES

1. See Standard Drawing D-11 for additional notes and details.
2. Concrete base shall be 564 - C - 3000.
3. All precast components shall be reinforced with 1/4" diameter steel, wound spirally on 4" centers.
4. All joints shall be set in Class C mortar.
5. Maintain 1 1/2" clear spacing between reinforcing and surface unless otherwise noted.
6. Exposed edges of concrete shall be rounded with a radius of 1/2".

LEGEND ON PLAN:

Revision	By	Approved	Date

SAN DIEGO REGIONAL STANDARD DRAWING

STORM DRAIN CLEANOUT - TYPE A

RECOMMENDED BY THE SAN DIEGO REGIONAL STANDARDS COMMITTEE

Coordinator R.C.E. 19807 Date Dec. 1975

DRAWING NUMBER D-9

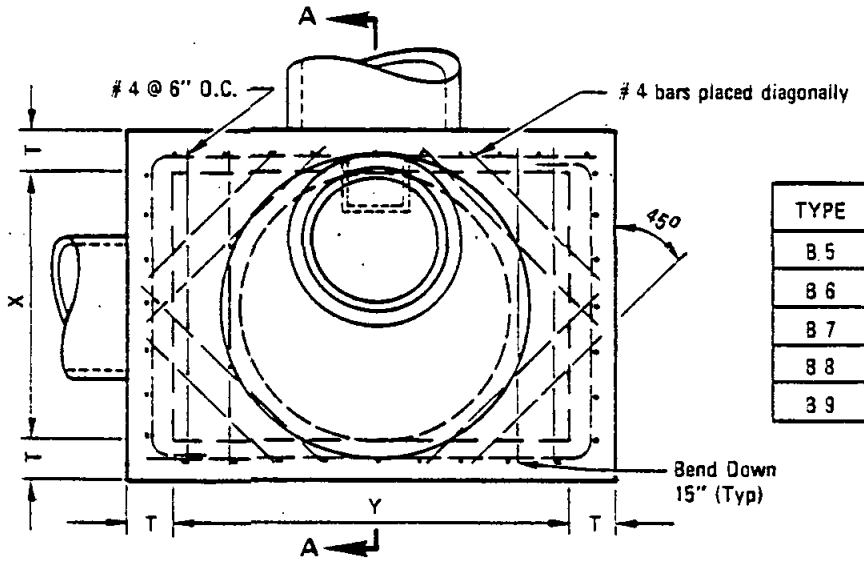

TYPE	PIPE DIA	X	Y	Z
B 5	up to 51"	4'	5'	5'
B 6	54" to 60"	4'	6'	6'
B 7	63" to 69"	4'	7'	7'
B 8	72" to 81"	4'	8'	8'
B 9	84" to 90"	4'	9'	9'

PLAN

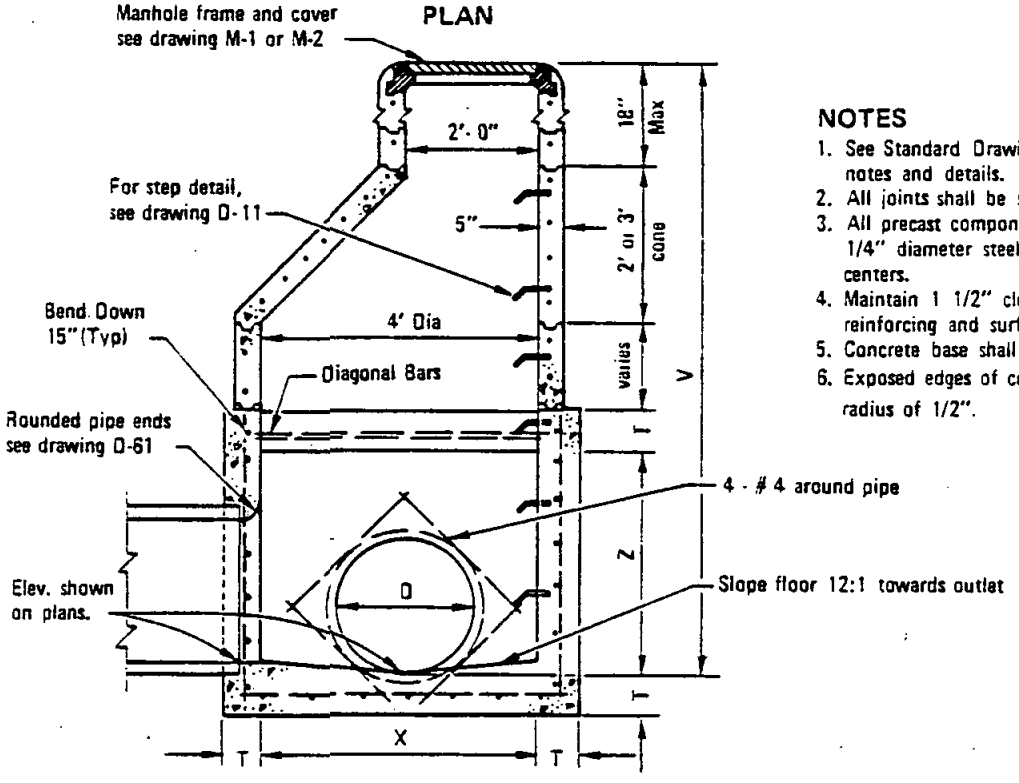

SECTION A–A

NOTES

1. See Standard Drawing D-11 for additional notes and details.
2. All joints shall be set in Class C mortar.
3. All precast components shall be reinforced with 1/4" diameter steel wound spirally on 4" centers.
4. Maintain 1 1/2" clear spacing between reinforcing and surface.
5. Concrete base shall be 564 - C - 3000.
6. Exposed edges of concrete shall be rounded with a radius of 1/2".

LEGEND ON PLANS

RECOMMENDED BY THE SAN DIEGO REGIONAL STANDARDS COMMITTEE

Coordinator R.C.E. 19807 Date Dec. 1975

DRAWING NUMBER D-10

SAN DIEGO REGIONAL STANDARD DRAWING

STORM DRAIN CLEANOUT - TYPE B

Revision	By	Approved	Date

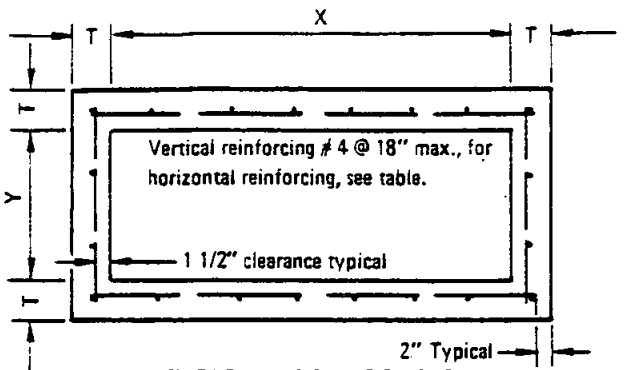

TYPICAL BOX SECTION

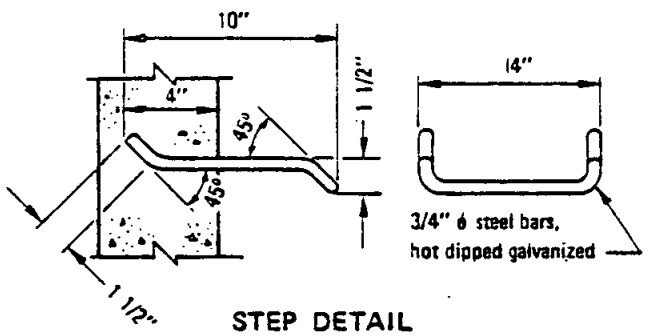

STEP DETAIL

BOX SECTION REINFORCEMENT			
MAXIMUM SPAN X or Y	DEPTH V	THICK-NESS T	HOR. & FLR. REINF.
3' - 0" to 4' - 0"	4' - 0"	6"	# 4 @ 18"
4' - 1" to 7' - 0"		6"	# 4 @ 12"
7' - 1" to 8' - 0"		6"	# 4 @ 8"
3' - 0" to 4' - 0"	4' - 1" to 8' - 0"	6"	# 4 @ 18"
4' - 1" to 5' - 0"		6"	# 4 @ 12"
5' - 1" to 6' - 0"		6"	# 4 @ 8"
6' - 1" to 8' - 0"		6"	# 4 @ 6"
3' - 0" to 4' - 0"	8' - 1" to 12' - 0"	6"	# 4 @ 15"
4' - 1" to 5' - 0"		8"	# 4 @ 12"
5' - 1" to 6' - 0"		8"	# 4 @ 8"
6' - 1" to 8' - 0"		8"	# 4 @ 6"
3' - 0" to 4' - 0"	12' - 1" to 16' - 0"	6"	# 4 @ 12"
4' - 1" to 5' - 0"		8"	# 4 @ 12"
5' - 1" to 6' - 0"		8"	# 4 @ 8"
6' - 1" to 7' - 0"		8"	# 4 @ 6"
7' - 1" to 8' - 0"		8"	# 5 @ 8"
3' - 0" to 4' - 0"	16' - 1" to 20' - 0"	8"	# 4 @ 12"
4' - 1" to 5' - 0"		10"	# 4 @ 12"
5' - 1" to 6' - 0"		10"	# 4 @ 8"
6' - 1" to 7' - 0"		10"	# 4 @ 6"
7' - 1" to 8' - 0"		10"	# 5 @ 8"
3' - 0" to 4' - 0"	20' - 1" to 24' - 0"	8"	# 4 @ 12"
4' - 1" to 5' - 0"		10"	# 4 @ 12"
5' - 1" to 6' - 0"		10"	# 4 @ 8"
6' - 1" to 7' - 0"		10"	# 4 @ 6"
7' - 1" to 8' - 0"		12"	# 5 @ 8"

NOTES

1. Concrete shall be 564 - C - 3000 unless otherwise noted.
2. Reinforcing steel shall comply with this drawing unless otherwise specified.
3. Reinforcing steel shall be intermediate grade deformed bars conforming to latest ASTM specifications.
4. Bends shall be in accordance with latest ACI code.
5. Minimum splice length for reinforcing shall be 30 diameters.
6. Floor shall have a wood trowel finish and, except where used as junction boxes, shall have a minimum slope of 1" per foot toward the outlet.
7. Depth V is measured from the top of the structure to the flowline of the box.
8. Wall thickness and reinforcing steel required may be decreased in accordance with table above.
9. Wall thickness shall be stepped on the outside of the box.
10. When the structure depth V exceeds 4', steps shall be cast into the wall at 15 inch intervals from 15" above floor to within 12 inches of top of structure. Where possible place steps in wall without pipe opening, otherwise over opening of smallest diameter.
11. Alternate step may be an approved steel reinforced polypropylene step.

Revision	By	Approved	Date
Notes		D S	7-79

SAN DIEGO REGIONAL STANDARD DRAWING

INLETS AND CLEANOUTS NOTES AND DETAILS

RECOMMENDED BY THE SAN DIEGO REGIONAL STANDARDS COMMITTEE

Coordinator R.C.E. 19807 Dec. 1975 Date

DRAWING NUMBER D-11

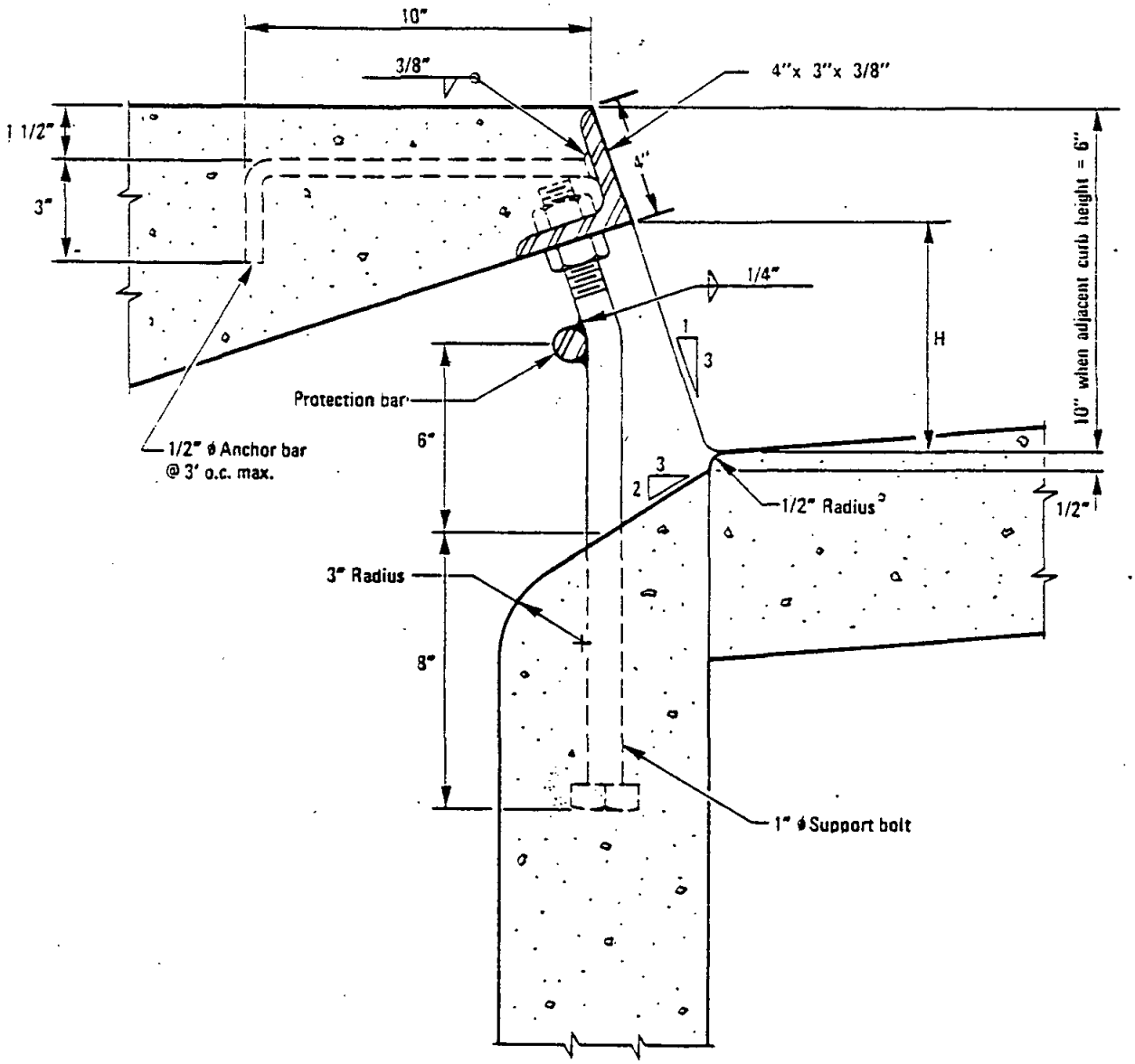

NOTES:

1. Face angle shall be cast into structure continuous for the full length "L".
2. All exposed metal parts to be hot-dipped galvanized after fabrication.
3. When curb inlet opening height (H) exceeds 10" install 1" ø steel protection bar.
4. Install additional bars at 3 1/2" clear spacing above first bar when opening exceeds 13".
5. When curb inlet opening length exceeds 8' install 1" ø steel support bolts, spaced at not more than 5' o.c.

RECOMMENDED BY THE SAN DIEGO REGIONAL STANDARDS COMMITTEE

Coordinator R.C.E. 19807 — Dec. 1975 Date

DRAWING NUMBER D-12.1

SAN DIEGO REGIONAL STANDARD DRAWING

CURB INLET OPENING

Revision	By	Approved	Date
Angle	RC	O.S.	7.79
Note 3	TKP	M.S.	10-82
Angle	TKP	M.S.	10-82

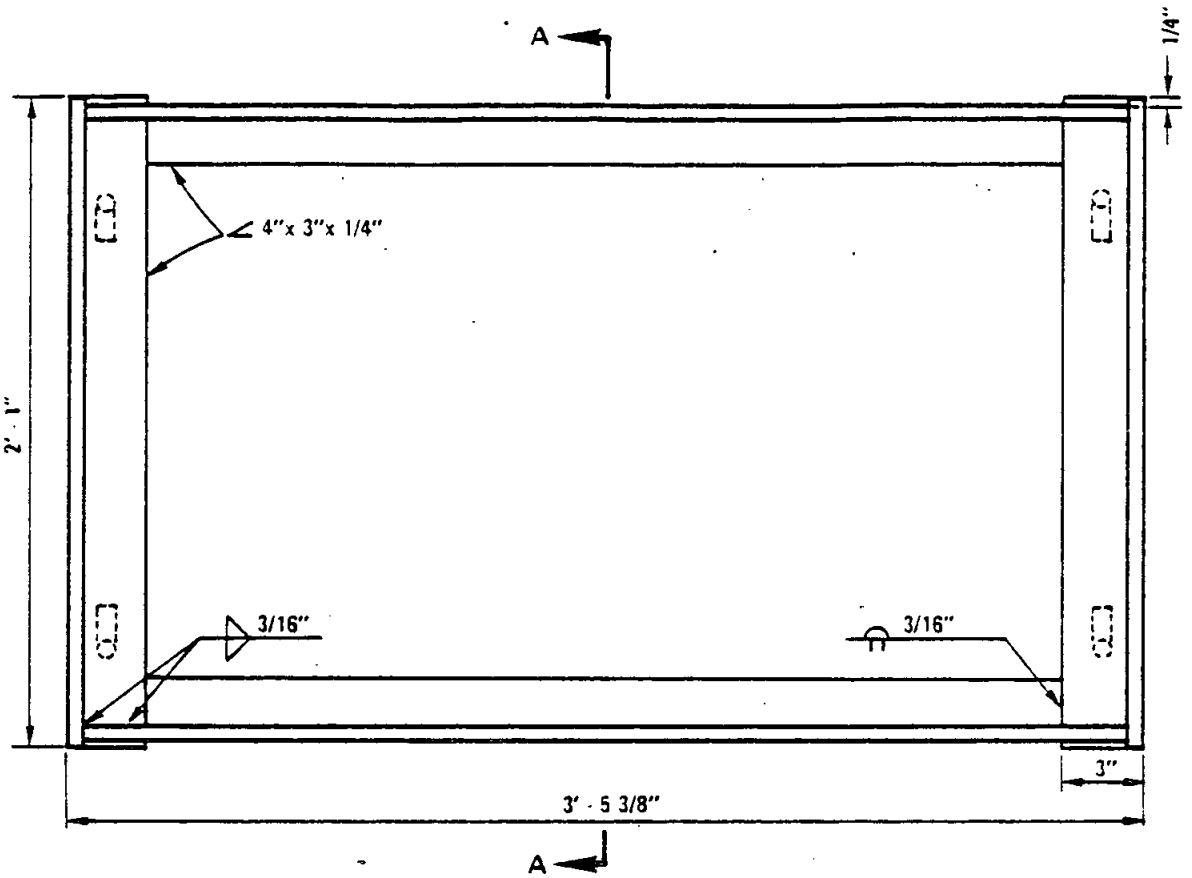

PLAN

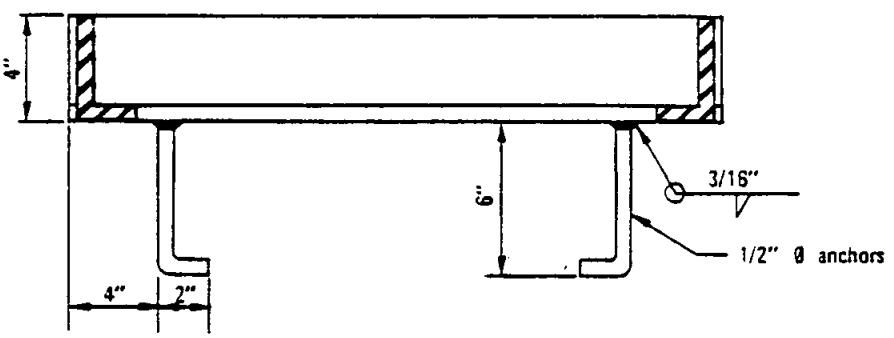

SECTION A–A

Revision	By	Approved	Date

SAN DIEGO REGIONAL STANDARD DRAWING

WELDED STEEL GRATE FRAME

RECOMMENDED BY THE SAN DIEGO REGIONAL STANDARDS COMMITTEE

Coordinator R.C.E. 19807 Dec. 1975 Date

DRAWING NUMBER D-13

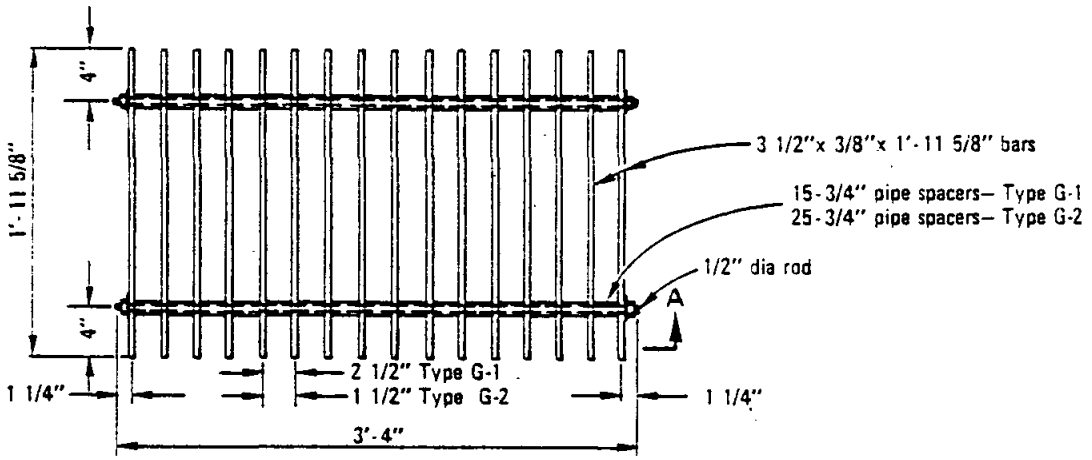

Type G–1 Grate (Wt. 155 #)
Type G–2 Grate (Wt. 240 #)

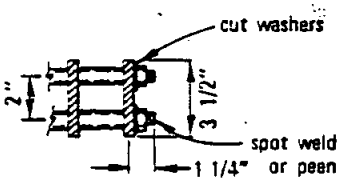

SECTION A

NOTES:

1. Hot dip galvanize all parts after fabrication.
2. Dimensions to Centerline of bars unless otherwise noted.
3. Type G-1 and G-2 grates are not to be used in areas subject to bicycle traffic.

RECOMMENDED BY THE SAN DIEGO REGIONAL STANDARDS COMMITTEE Coordinator R.C.E. 13807 Dec. 1975 Date	SAN DIEGO REGIONAL STANDARD DRAWING	Revision	By	Approved	Date
		Delete G-3	TRP	M.B.	10-92
DRAWING NUMBER D-14.1	DRAINAGE STRUCTURE GRATES TYPES G1 & G2				

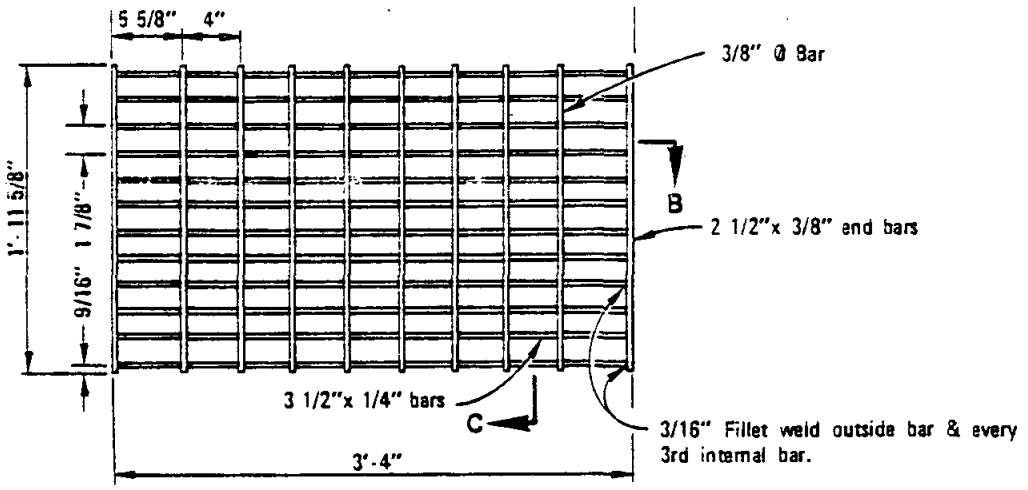

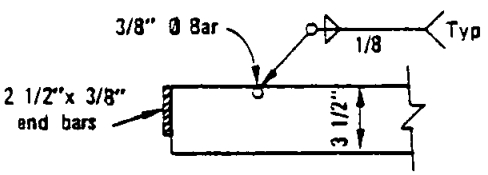

SECTION B

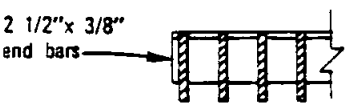

SECTION C

NOTES:

1. Hot dip galvanize all parts after fabrication.
2. Dimensions to Centerline of bars unless otherwise noted.
3. Weight: 141 lbs.

Revision	By	Approved	Date
Delete G-5	TRP	M. B.	10-82

SAN DIEGO REGIONAL STANDARD DRAWING

DRAINAGE STRUCTURE GRATE TYPE G4

RECOMMENDED BY THE SAN DIEGO REGIONAL STANDARDS COMMITTEE

Coordinator R.C.E. 19807 — Dec. 1975 Date

DRAWING NUMBER D-15.1

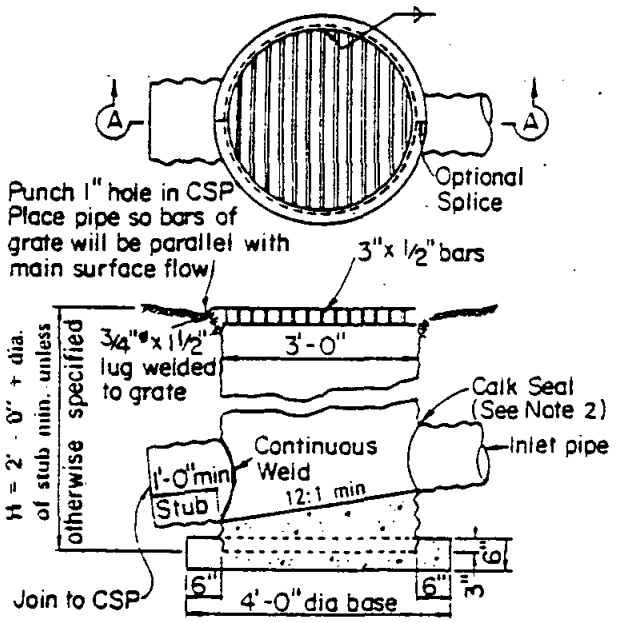

SECTION A-A

TYPE A

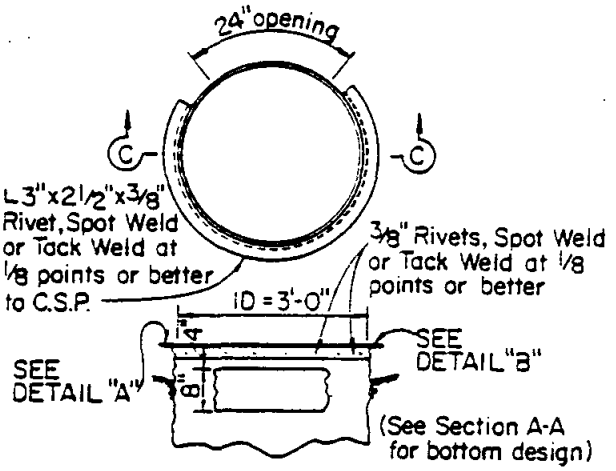

SECTION C-C

TYPE B

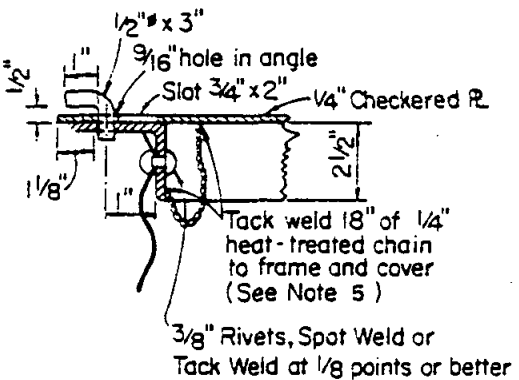

DETAIL "A"

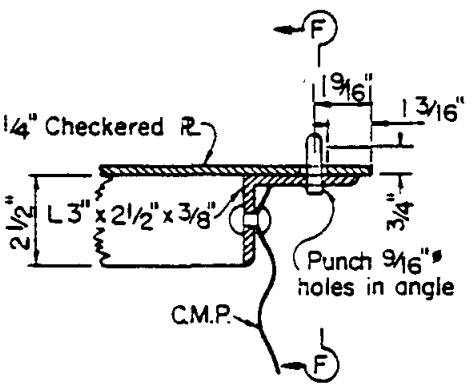

DETAIL "B"

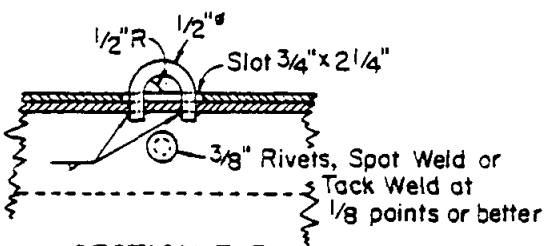

SECTION F-F

NOTES

1. All components shall be galvanized.
2. Inlet and outlet pipes shall be set at factory and positioned as shown on plans.
3. Ladders and Steps: None required where "H" is 3'-6" or less. Where "H" is between 3'-6" and 4'-11" place one step +16" above the floor. If "H" is 5'-0" or more install a ladder placing the lowest rung 16" above the floor and the highest rung not more than 14" below top of inlet. Place single step or ladder in wall without wall opening.
4. See Standard Drawing D-17 for additional details.
5. Grate to be provided when specified.
6. Grate detail shall be as shown on drawing D-17 unless otherwise approved by Agency.

RECOMMENDED BY THE SAN DIEGO REGIONAL STANDARDS COMMITTEE	SAN DIEGO REGIONAL STANDARD DRAWING	Revision	By	Approved	Date
Coordinator R.C.E. 19807 Dec. 1975 Date		Notes		D.S	7-79
DRAWING NUMBER D-16	CORRUGATED STEEL PIPE INLETS TYPES A AND B				

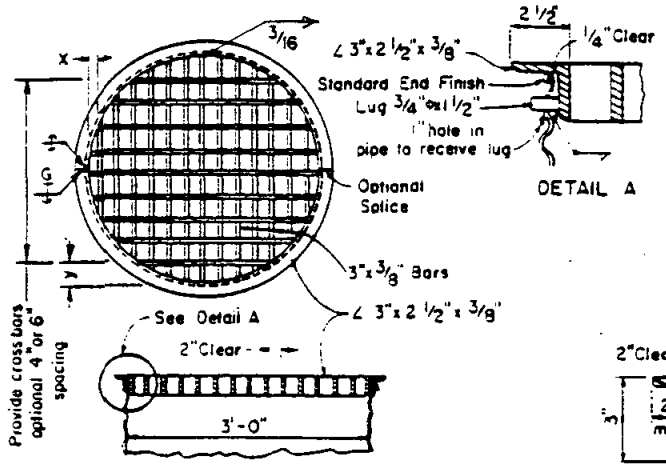

GRATE DETAILS

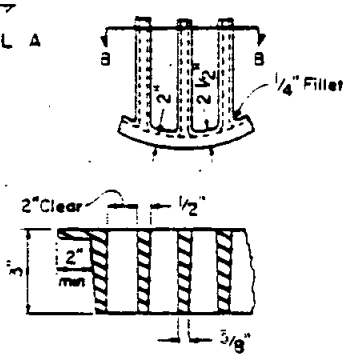

ALTERNATIVE CAST NODULAR IRON GRATE OR CAST STEEL

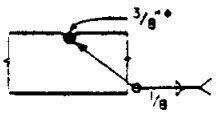

3/8"ø Cross bars may be fillet welded, resistance welded or electroforged to bearing bars.

CROSS BAR DETAIL

GRATE (WELDED STEEL)

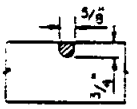

CROSS BAR DETAIL

ALTERNATIVE CAST NODULAR IRON GRATE OR CAST STEEL GRATE

GRATE BAR SPACING TABLE

TYPE	NO. BARS	CLEAR BAR SPACING	X	Y	
				4" SPACING	6" SPACING
welded	15	2	9/16	3 3/4"	5 3/4"
Cast	13	2	2 1/8	3 3/4	5 3/4

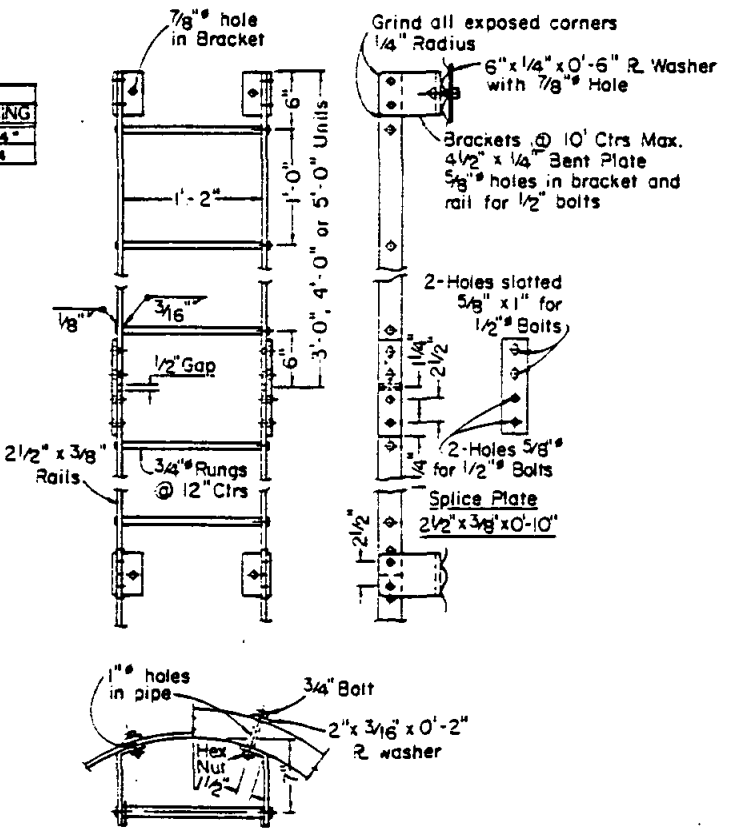

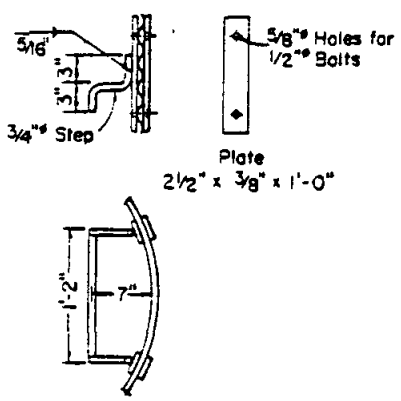

STEP DETAIL

H = 3' - 6" to 4' - 11"

LADDER DETAIL

H = 5' - 0" or GREATER

Revision	By	Approved	Date

SAN DIEGO REGIONAL STANDARD DRAWING

CORRUGATED STEEL PIPE INLETS DETAILS

RECOMMENDED BY THE SAN DIEGO REGIONAL STANDARDS COMMITTEE

Coordinator R.C.E. 19807 Dec. 1975 Date

DRAWING NUMBER D-17

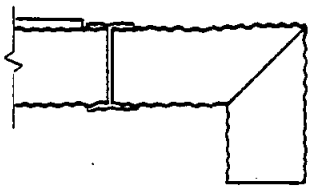

ELBOW

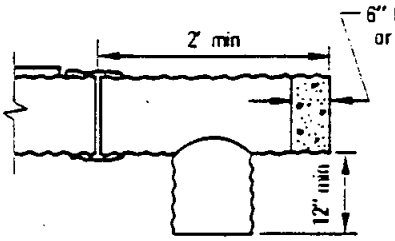

TEE

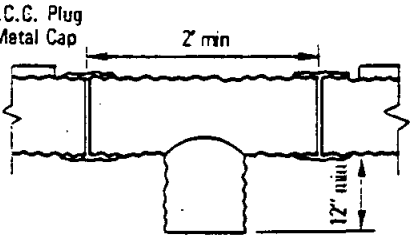

TEE–SAG CONDITION

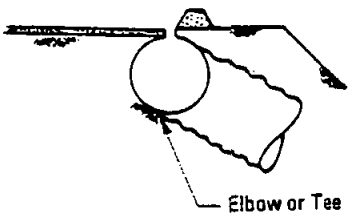

OVERSIDE DRAIN

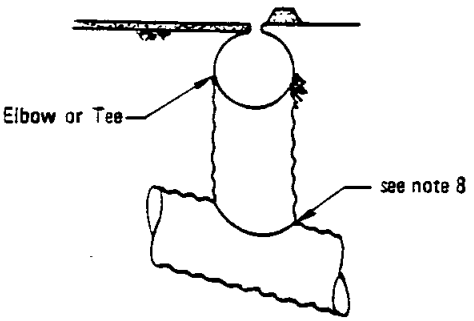

RISER

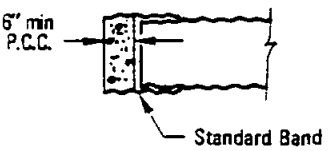

BAND PLUG

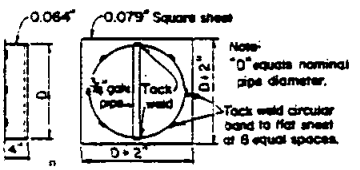

METAL CAP DETAIL

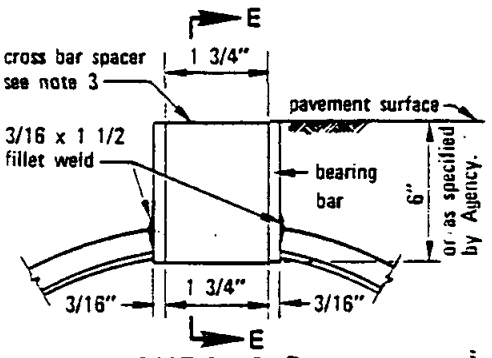

SECTION D–D
GRATE SLOT DETAIL

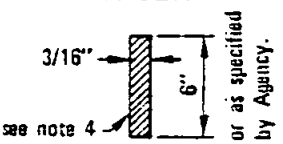

SECTION E–E

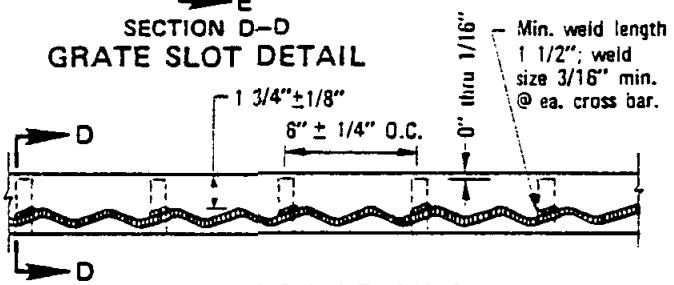

GRATE SLOT WELDING DETAIL

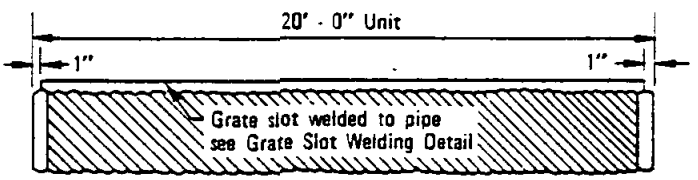

GRATE SLOT DRAIN

NOTES

1. Drain seams may be riveted or resistance spotwelded at equal centers, continuous helical lock seam or helical welded seam.
2. Each drain section shall be assembled with standard coupling bands.
3. Cross bar spacer of grate shall be pressure fusion or plug welded to bearing bars in such a manner as to develop the strength of the cross bar spacer.
4. Cross bar spacer (Section E–E) may differ from that shown provided section area is equal or greater.
5. Grate material shall be a weldable grade of steel complying to the requirements of ASTM A 36.
6. The maximum variance from a straight line from the extreme top corners of the bearing bar shall be 1/2" in 20 feet.
7. Installation lengths shall be 10 feet or multiples thereof.
8. Either field joint sealed with a pliable mixture of sand, portland cement and emulsified asphalt (Mixture of 1 part portland cement, 3 - 5 parts sand and 1 1/2 parts SSI emulsified asphalt), or continuous weld.

RECOMMENDED BY THE SAN DIEGO REGIONAL STANDARDS COMMITTEE

Coordinator R.C.E. 13807 — Dec. 1975 Date

DRAWING NUMBER D-18.1

SAN DIEGO REGIONAL STANDARD DRAWING

SLOTTED CORRUGATED STEEL PIPE DRAIN 12" THROUGH 24"

Revision	By	Approved	Date
Sect. D-D	TRP	M.R.B.	10-72

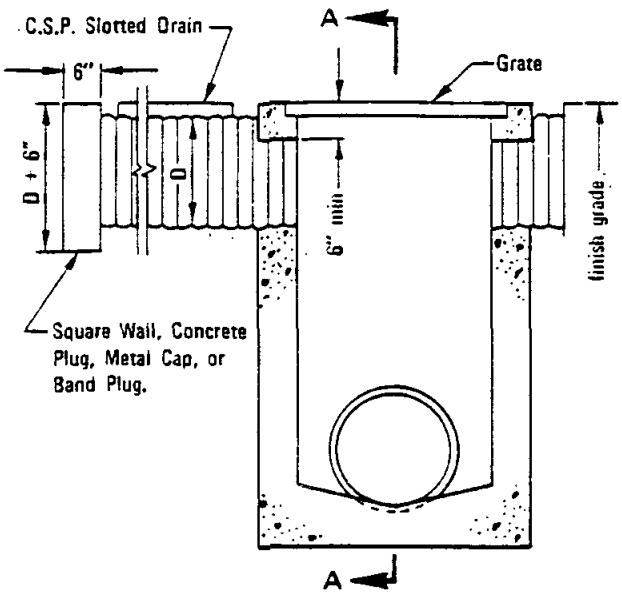

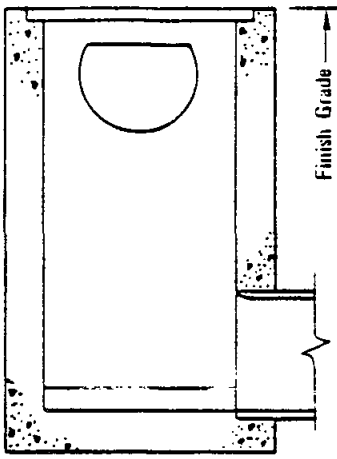

SECTION A–A

CATCH BASIN

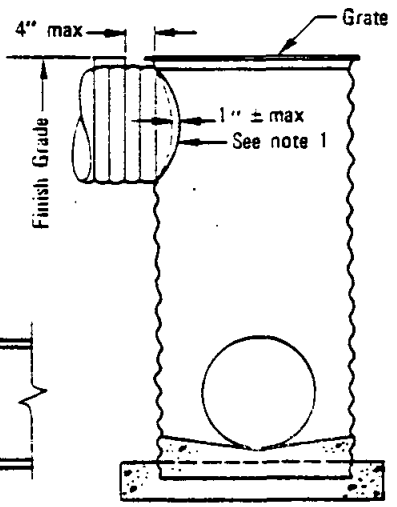

C.S.P. INLET

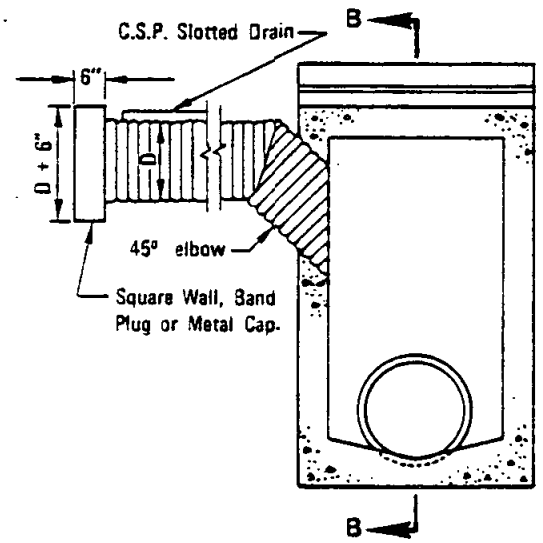

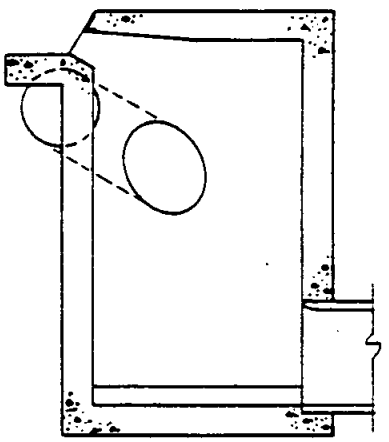

SECTION B–B

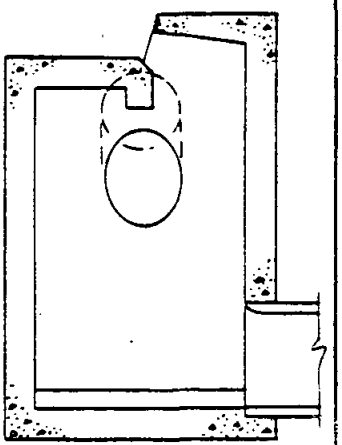

ALTERNATE SECTION B–B

INLETS

NOTES

1. Either field joint with a pliable mixture of sand, portland cement and emulsified asphalt (mixture of 1 part portland cement, 3 - 5 parts sand, and 1 1/2 parts SSI emulsified asphalt), or continuous weld.
2. See Standard Drawing D - 18 for additional notes and details.

Revision	By	Approved	Date

SAN DIEGO REGIONAL STANDARD DRAWING

SLOTTED DRAIN CONNECTIONS TO STANDARD INLETS

RECOMMENDED BY THE SAN DIEGO REGIONAL STANDARDS COMMITTEE

Coordinator R.C.E. 19807 — Dec. 1975 Date

DRAWING NUMBER D-19

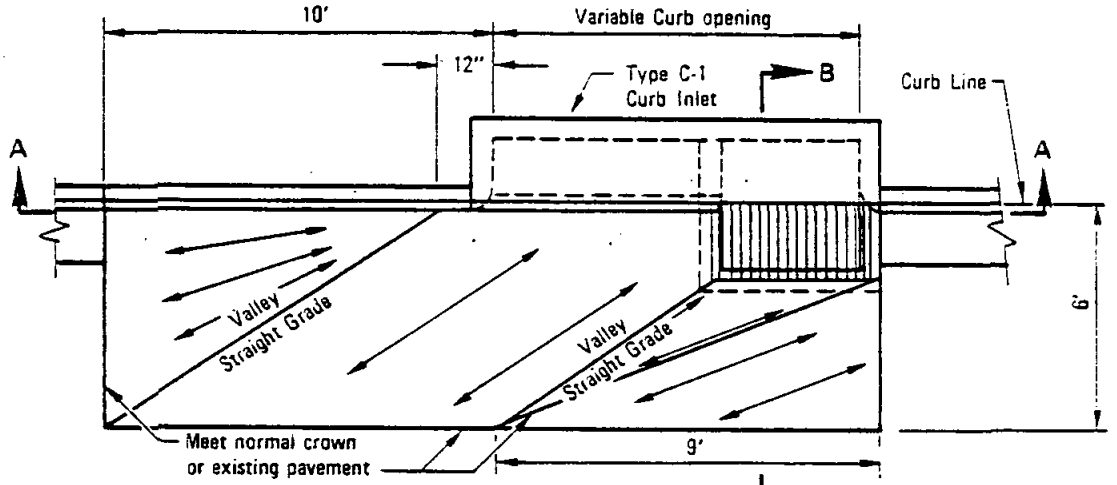

PLAN

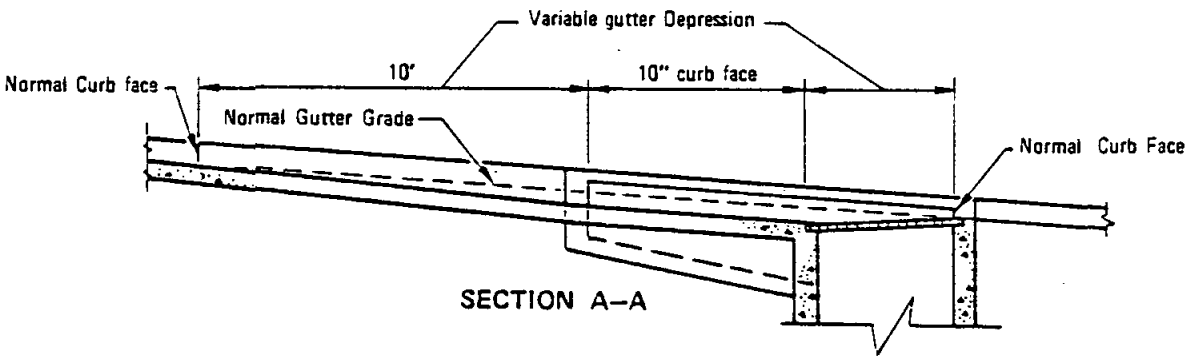

SECTION A–A

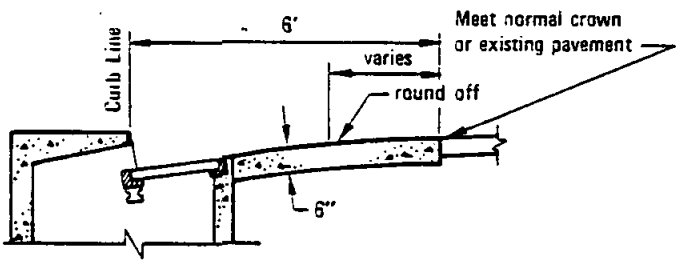

SECTION B–B

NOTES:

1. Curb and apron to be placed monolithically.
2. Use of false header at valleys and slope break line is optional.
3. Extend vertical steel from inlet structure into concrete apron as required.
4. Screed Direction ←→
5. Concrete shall be 517-C-2500.

LEGEND ON PLANS

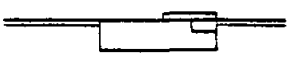

RECOMMENDED BY THE SAN DIEGO REGIONAL STANDARDS COMMITTEE	SAN DIEGO REGIONAL STANDARD DRAWING	Revision	By	Approved	Date
Coordinator R.C.E. 19807 — Dec. 1975 Date	CONCRETE APRON FOR CURB INLET				
DRAWING NUMBER D-20					

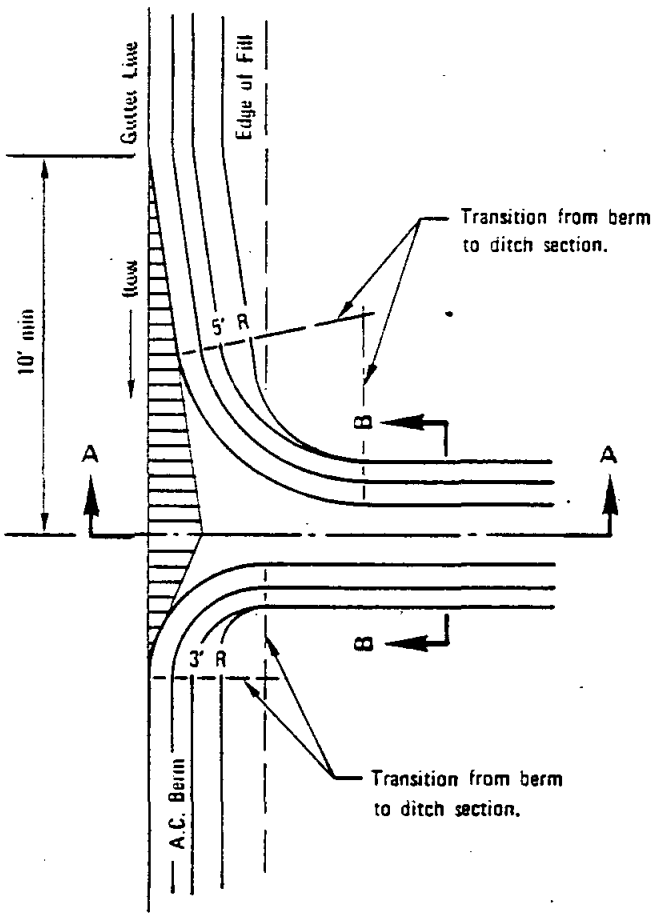

PLAN

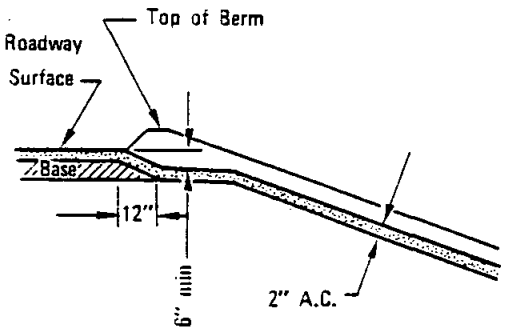

SECTION A–A

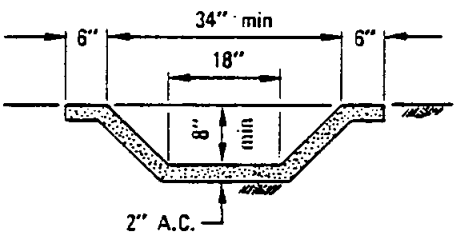

NOTE

Cross - sectional area of ditch may be rounded, or trapezoidal.

SECTION B–B

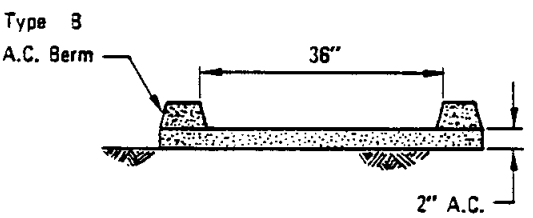

ALTERNATE SECTION B–B

NOTES

1. A.C. spillway may be used when fill is 10' or less, and where fill slope is 1 1/2:1 or flatter.
2. Use 10' min. length of gutter transition on each side of downdrain in sag condition.

LEGEND ON PLANS

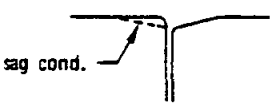

RECOMMENDED BY THE SAN DIEGO REGIONAL STANDARDS COMMITTEE Coordinator R.C.E. 13807 Date Dec. 1975	SAN DIEGO REGIONAL STANDARD DRAWING	Revision	By	Approved	Date
		Plan		D. S.	7-79
DRAWING NUMBER D-22	ASPHALT CONCRETE SPILLWAY				

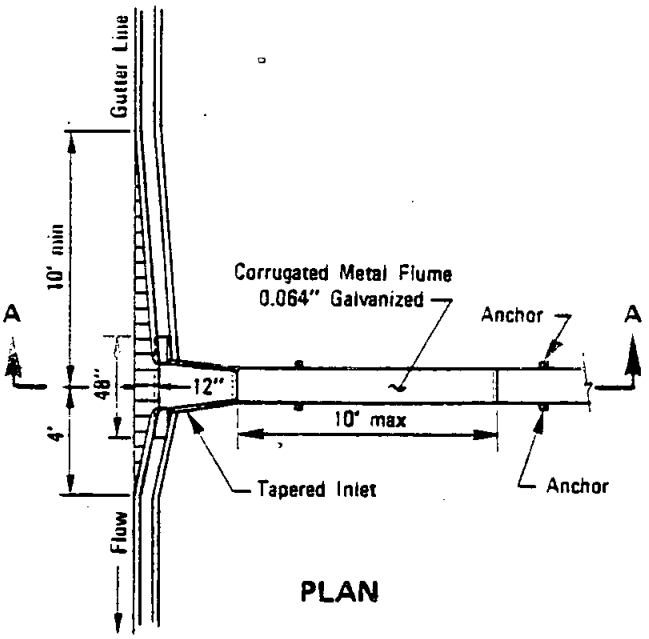

PLAN

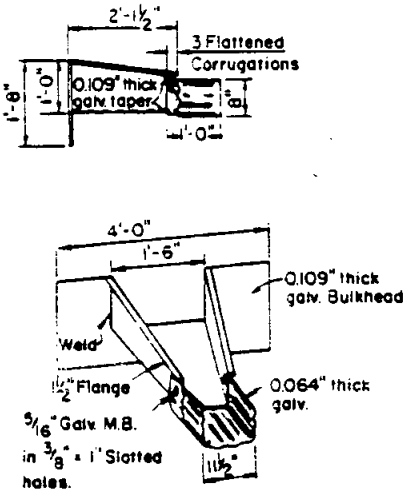

TAPERED INLET

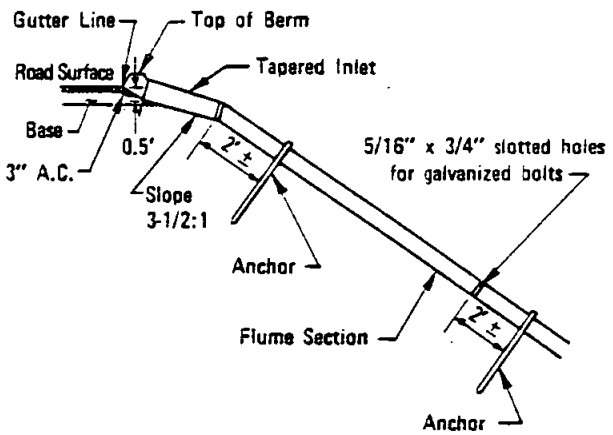

SECTION A–A

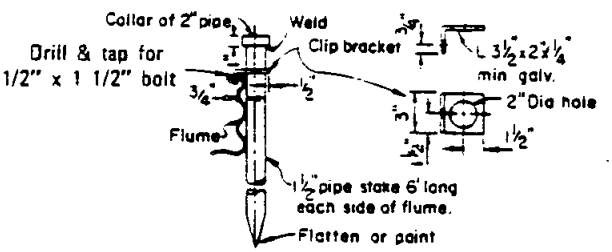

ANCHOR DETAIL

NOTES

1. Downdrain flume may be used where fill slope is 1 1/2 : 1 or flatter.
2. Use 10' min length of gutter transition on each side of downdrain in sag location.
3. All metal parts to be galvanized after fabrication.

LEGEND ON PLANS

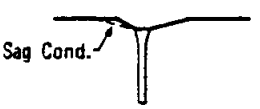

Revision	By	Approved	Date

SAN DIEGO REGIONAL STANDARD DRAWING

TAPERED INLET AND DOWNDRAIN FLUME

RECOMMENDED BY THE SAN DIEGO REGIONAL STANDARDS COMMITTEE

Coordinator R.C.E. 19807 — Dec. 1975 Date

DRAWING NUMBER D-23

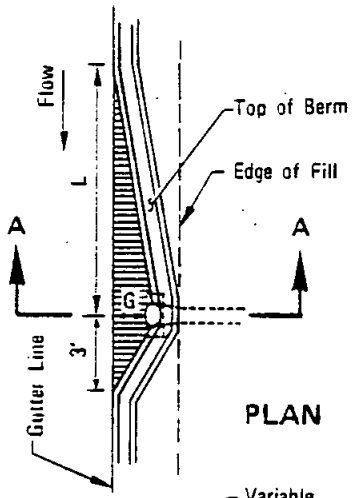

PLAN

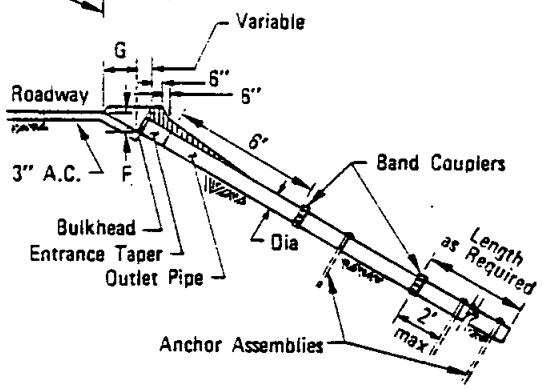

SECTION A–A

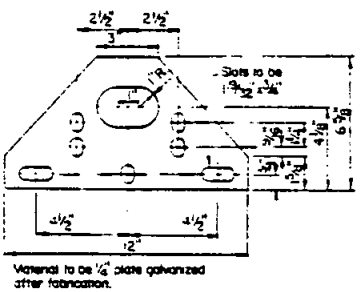

PLATE DETAIL

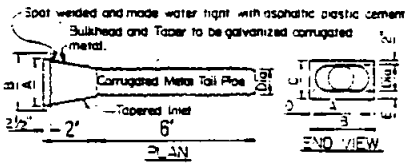

ENTRANCE TAPER– TYPE 1
ALTERNATIVE A

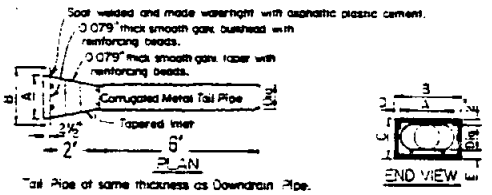

ENTRANCE TAPER–TYPE 1
ALTERNATIVE B

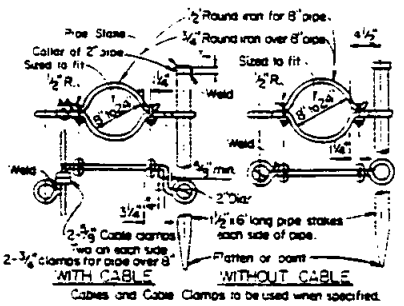

ANCHOR ASSEMBLY
ALTERNATIVE–A

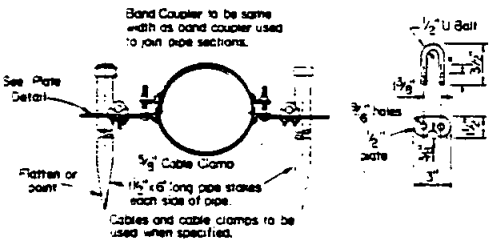

ANCHOR ASSEMBLY
ALTERNATIVE–B

Dimensions to be as tabulated below for Assembly.

Dia	A	B	C	D	E	F	G	L
8"	16"	25 1/2"	15"	4 3/4"	5"	6"	18"	10'
12"	18"	25 1/2"	19"	3 3/4"	5"	9"	20"	15'
18"	24"	36"	26"	6"	6"	12"	24"	25'

LEGEND ON PLANS

NOTES

1. All metal parts for anchor assemblies shall be galvinized after fabrication.
2. One anchor assembly required per length of pipe. When final length exceeds 10 ft. two anchors shall be required.

RECOMMENDED BY THE SAN DIEGO REGIONAL STANDARDS COMMITTEE

Coordinator R.C.E. 19807 — Dec. 1975 Date

DRAWING NUMBER D-24

SAN DIEGO REGIONAL STANDARD DRAWING

ENTRANCE TAPER AND DOWNDRAIN PIPE

Revision	By	Approved	Date

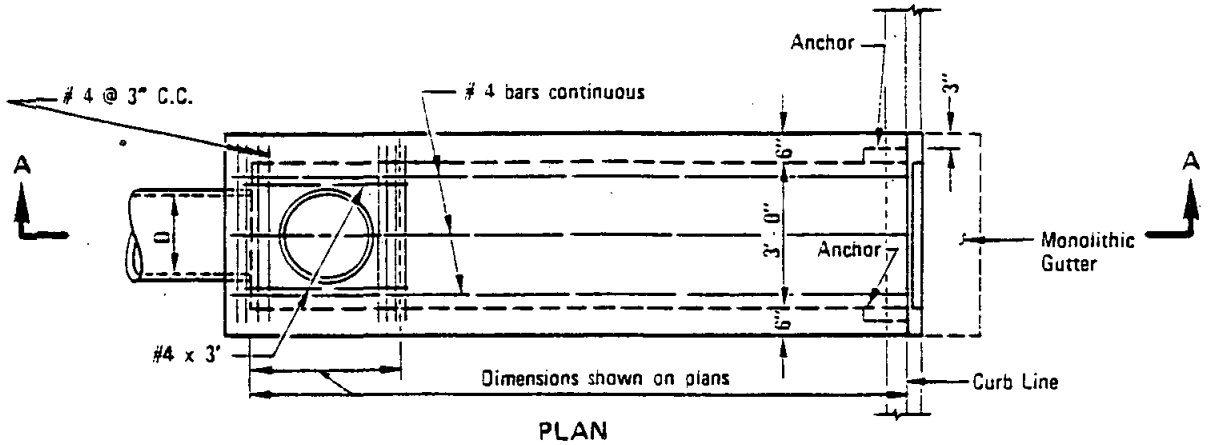

PLAN

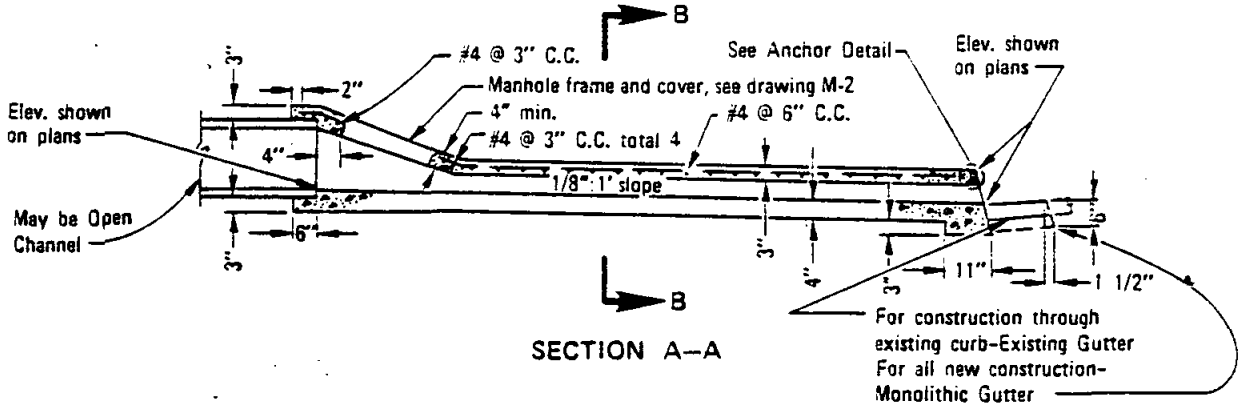

SECTION A–A

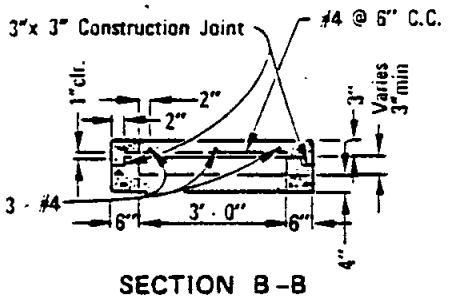

SECTION B–B

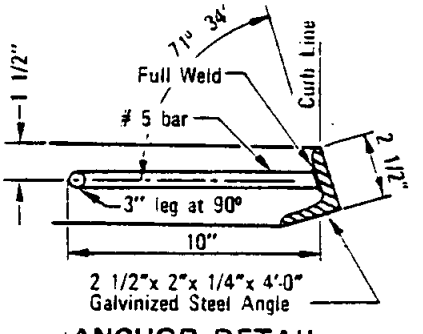

ANCHOR DETAIL

NOTES

1. Concrete shall be 564-C-3000.
2. D=inside diameter of pipe or depth of channel.
3. Section to be sloped laterally with top conforming to the grades of the existing sidewalk and curb.
4. Manhole frame and cover may be deleted with open channel.
5. Trowel finish top surface and reproduce markings of existing sidewalk and curb.
6. Trowel finish floor of outlet.

LEGEND ON PLANS

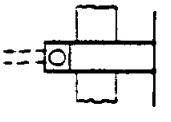

Revision	By	Approved	Date
Bar Size		O.S.	7.79

SAN DIEGO REGIONAL STANDARD DRAWING

CURB OUTLET - TYPE A

RECOMMENDED BY THE SAN DIEGO REGIONAL STANDARDS COMMITTEE

Coordinator R.C.E. 19807 — Dec. 1975 Date

DRAWING NUMBER D-25

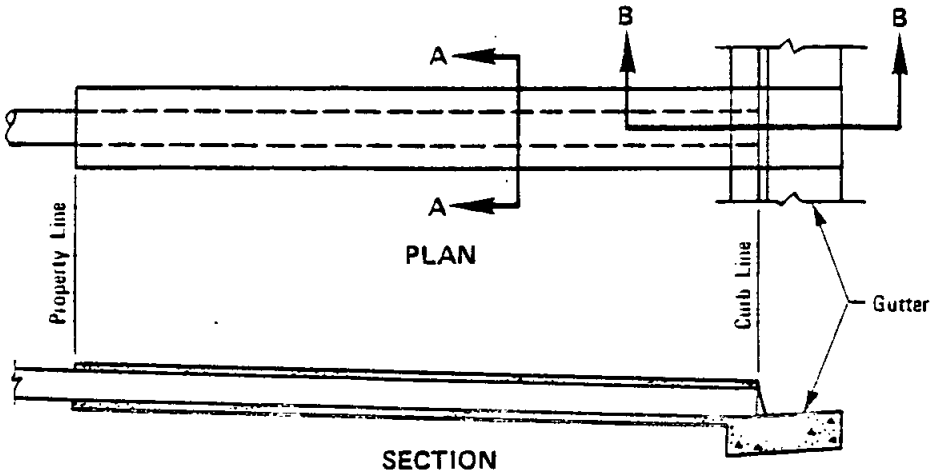

PLAN

SECTION

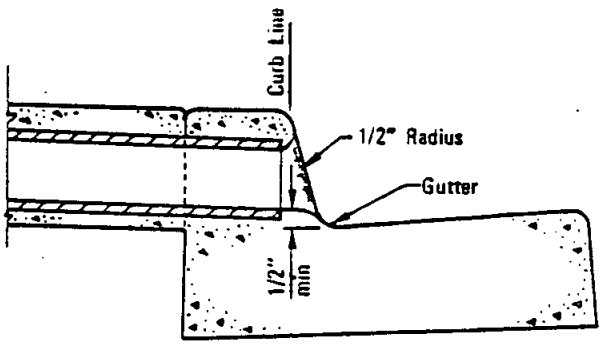

SECTION B–B

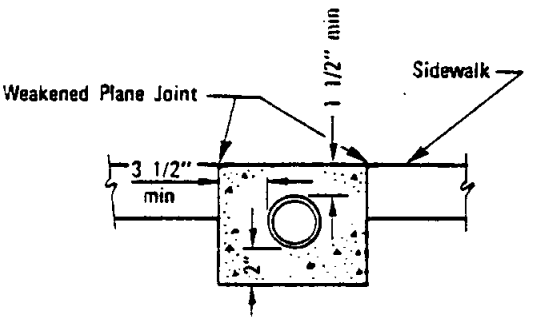

SECTION A–A

APPROVED DRAIN PIPE SIZES	
3"	6" to 8" CURB FACE
4"	8" CURB FACE
6"	10" CURB FACE

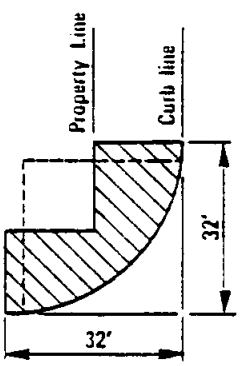

Drain shall not occupy the hatched area

BLOCK CORNER

NOTES

1. Pipe shall be one continuous length from property line to curb line.
2. Multiple pipes to be set a minimum distance of D/2 apart.
3. Concrete shall be 517-C-2500.
4. Pipe shall be circular asbestos cement, cast iron or rigid plastic.

Revision	By	Approved	Date

SAN DIEGO REGIONAL STANDARD DRAWING

SIDEWALK UNDERDRAIN PIPE

RECOMMENDED BY THE SAN DIEGO REGIONAL STANDARDS COMMITTEE

Coordinator R.C.E. 19607 Date Dec. 1975

DRAWING NUMBER D-27

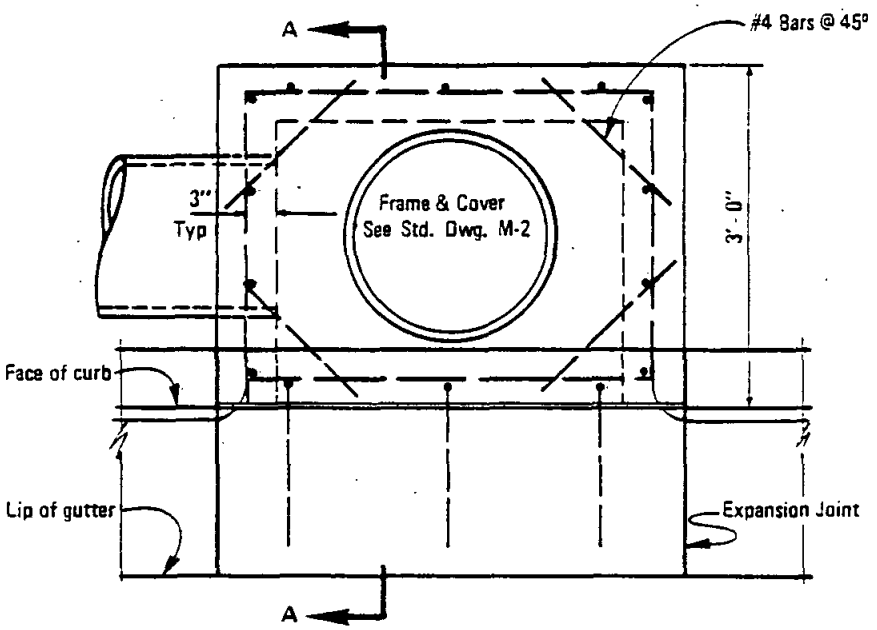

PLAN

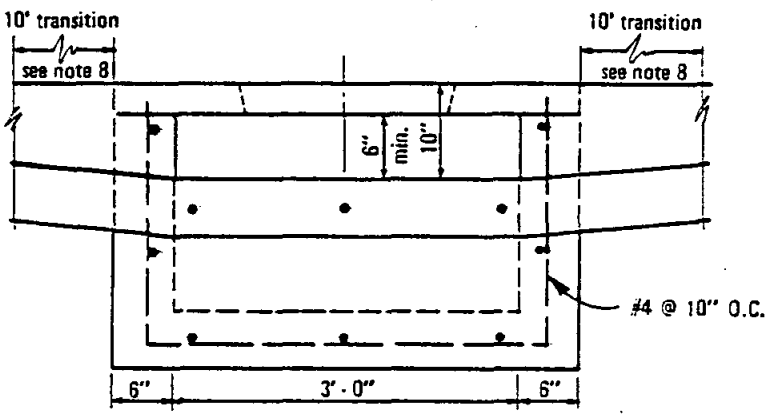

ELEVATION

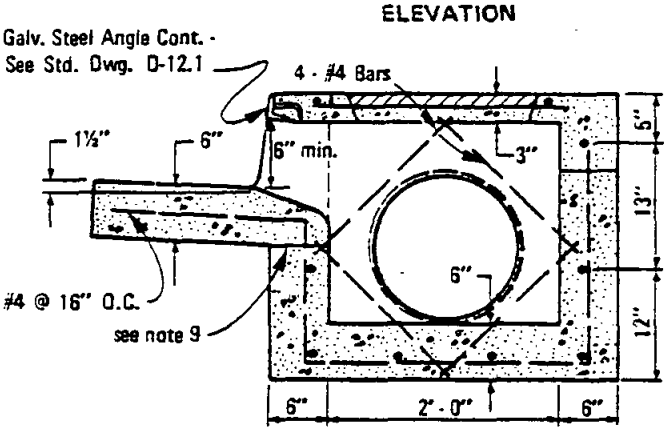

SECTION A-A

NOTES

1. See Standard Drawings D-11 & D-12.1 for additional notes and details.
2. This inlet shall not be used with any pipe over 18" I.D.
3. Surface of top slab shall be finished as specified for sidewalks in the Standard Specifications and shall drain towards streets at a slope of 1/4" per foot.
4. Exposed edges of concrete shall be rounded with a radius of 1/2".
5. Concrete gutter to match adjacent gutter.
6. Expansion joint material shall be placed at the ends of the inlet where the curb is to adjoin.
7. Provide 1/4" tooled groove in top slab in line with back of adjacent curb.
8. Transition to normal curb height in 10' unless noted otherwise.
9. Construction joint (Standard Drawing D-12.1) may be eliminated if inlet and gutter are constructed concurrently.

LEGEND ON PLANS

RECOMMENDED BY THE SAN DIEGO REGIONAL STANDARDS COMMITTEE

Coordinator R.C.E. 25291 Date

DRAWING NUMBER D-28.1

SAN DIEGO REGIONAL STANDARD DRAWING

CURB INLET, SHALLOW - TYPE H

Revision	By	Approved	Date
Reference			

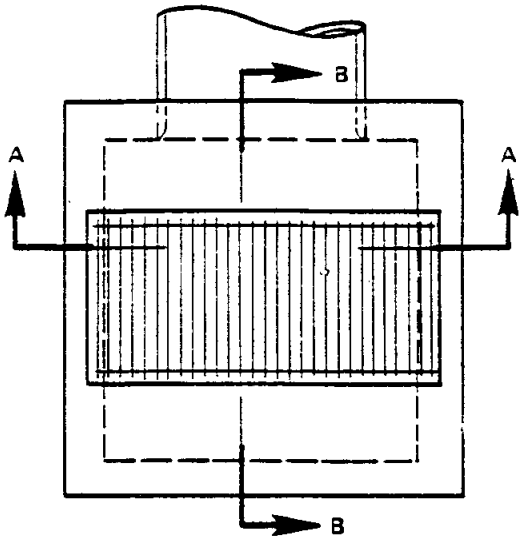

PLAN

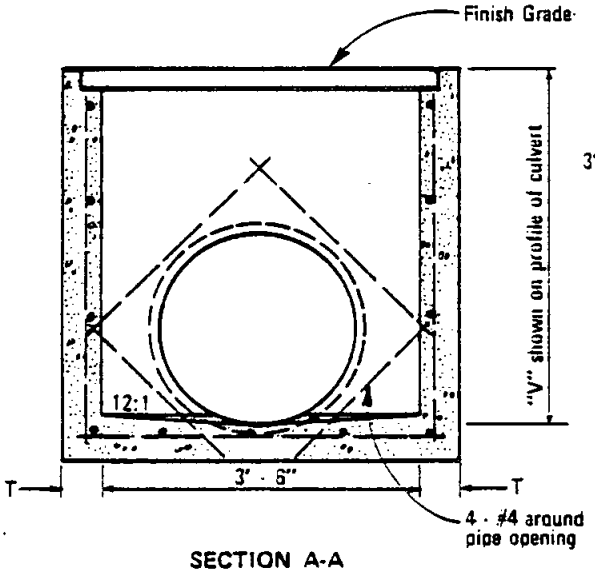

SECTION A-A

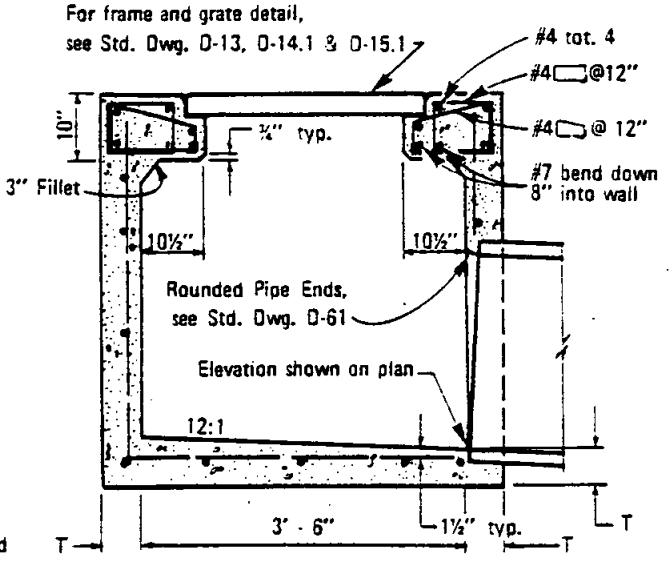

SECTION B-B

NOTES

1. See Standard Drawing D-11 for additional notes and details.
2. When "V" exceeds 4', steps shall be installed.

LEGEND ON PLANS

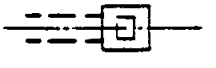

Revision		Approved	Date
Reference	KP	M.B.	10-82

SAN DIEGO REGIONAL STANDARD DRAWING

RECOMMENDED BY THE SAN DIEGO REGIONAL STANDARDS COMMITTEE

Coordinator R.C.E. 25291 Date

CATCH BASIN-TYPE I

DRAWING NUMBER D-29.1

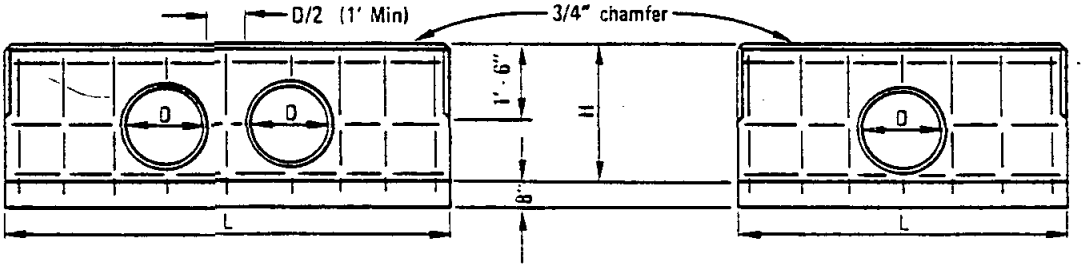

ELEVATION DOUBLE HEADWALL

ELEVATION SINGLE HEADWALL

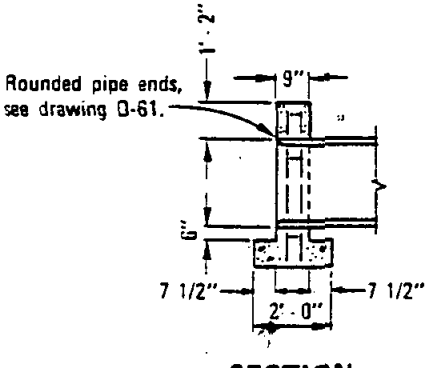

SECTION

D	H	SINGLE			DOUBLE		
		L	Steel Lbs.	Conc C. Y.	L	Steel Lbs.	Conc C. Y.
12"	2' - 8"	5' - 0"	35	0.60	8' - 0"	50	0.94
15"	2' - 11"	6' - 0"	40	0.75	9' - 6"	60	1.17
18"	3' - 2"	7' - 0"	50	0.91	10' - 6"	75	1.35
21"	3' - 5"	7' - 6"	60	1.02	11' - 6"	90	1.52
24"	3' - 8"	8' - 6"	75	1.20	12' - 6"	100	1.72
27"	3' - 11"	9' - 6"	85	1.39	14' - 0"	115	2.00
30"	4' - 2"	10' - 0"	85	1.52	15' - 0"	126	2.21
33"	4' - 5"	11' - 0"	100	1.73	16' - 0"	130	2.42
36"	4' - 8"	12' - 0"	105	1.95	17' - 0"	145	2.65
39"	4' - 11"	12' - 6"	130	2.09	18' - 0"	170	2.88
42"	5' - 2"	13' - 6"	140	2.34	19' - 0"	185	3.13
45"	5' - 5"	14' - 6"	150	2.60	20' - 0"	195	3.38
48"	5' - 8"	15' - 0"	160	2.75	21' - 0"	200	3.64
51"	5' - 11"	16' - 0"	180	3.03	22' - 6"	225	4.02
54"	6' - 2"	17' - 0"	190	3.31	23' - 6"	240	4.30

NOTES

1. Concrete shall be 564-C-3000.
2. All reinforcing steel # 4 bars. All vertical and horizontal tie bars 18" maximum spacing.

LEGEND ON PLANS

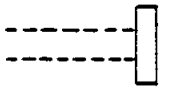

RECOMMENDED BY THE SAN DIEGO REGIONAL STANDARDS COMMITTEE

Coordinator R.C.E. 19807 — Dec. 1975 Date

DRAWING NUMBER D-30

SAN DIEGO REGIONAL STANDARD DRAWING

STRAIGHT HEADWALL - TYPE A
(CIRCULAR PIPE)

Revision	By	Approved	Date

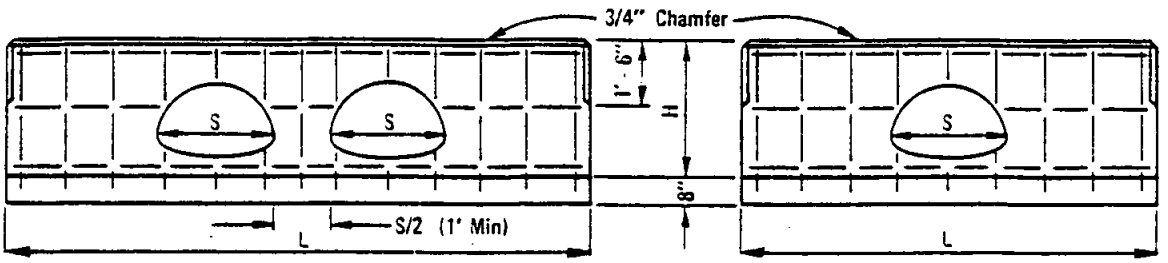

ELEVATION DOUBLE HEADWALL

ELEVATION SINGLE HEADWALL

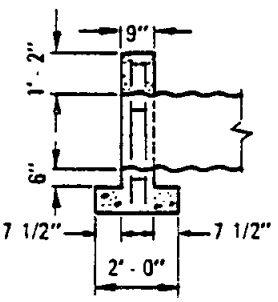

SECTION

C.S.P. ARCH SIZE	H	SINGLE			DOUBLE		
		L	Steel Lbs	Conc Cu. Yds.	L	Steel Lbs	Conc Cu. Yds.
18" x 11"	2' - 7"	5' - 6"	37	0.64	8' - 0"	52	.91
21" x 15"	2' - 11"	6' - 6"	45	0.80	10' - 0"	60	1.22
24" x 18"	3' - 2"	7' - 6"	50	0.96	11' - 6"	70	1.45
28" x 20"	3' - 4"	8' - 6"	60	1.12	13' - 6"	90	1.76
35" x 24"	3' - 8"	10' - 6"	85	1.47	15' - 6"	120	2.16
42" x 29"	4' - 1"	12' - 6"	110	1.76	18' - 0"	145	2.57
49" x 33"	4' - 5"	14' - 6"	130	2.26	21' - 0"	170	3.13
57" x 38"	4' - 10"	17' - 0"	155	2.81	24' - 6"	210	3.86
64" x 43"	5' - 3"	19' - 0"	175	3.31	27' - 0"	230	4.42
71" x 47"	5' - 7"	21' - 0"	195	3.81	30' - 0"	255	5.09

NOTES

1. Concrete shall be 564-C-3000.
2. All reinforcing steel # 4 bars. All vertical and horizontal tie bars 18" maximum spacing.

LEGEND ON PLANS

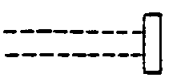

Revision	By	Approved	Date

SAN DIEGO REGIONAL STANDARD DRAWING

STRAIGHT HEADWALL - TYPE A
(C.S.P.-ARCH)

RECOMMENDED BY THE SAN DIEGO REGIONAL STANDARDS COMMITTEE

Coordinator R.C.E. 19807 — Dec. 1975 Date

DRAWING NUMBER D-31

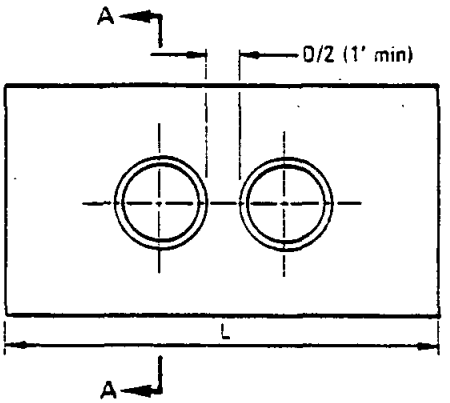

DOUBLE PIPE ELEVATION

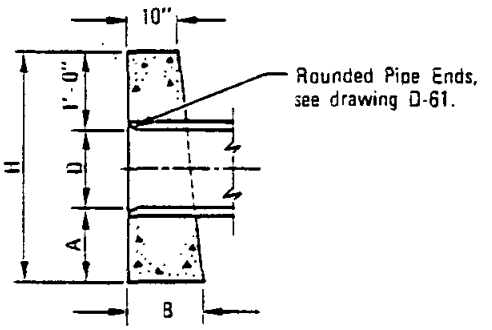

SECTION A–A

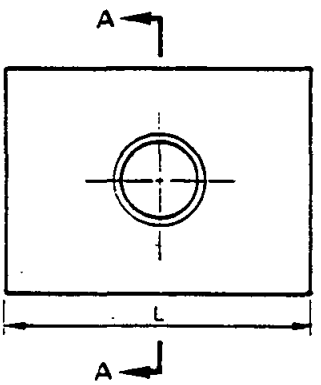

SINGLE PIPE ELEVATION

D	A	B	H	SINGLE		DOUBLE	
				L	Conc C.Y.	L	Conc C.Y.
12"	2'-0"	1'-0"	4'-0"	4'-0"	.45	5'-8"	.62
15"	2'-0"	1'-1"	4'-3"	5'-0"	.63	7'-1"	.85
18"	2'-0"	1'-2"	4'-6"	6'-0"	.83	8'-6"	1.12
24"	2'-6"	1'-5"	5'-6"	8'-0"	1.54	11'-4"	2.09
30"	2'-6"	1'-9"	6'-0"	10'-0"	2.41	14'-2"	3.26
36"	3'-0"	2'-0"	7'-0"	12'-0"	3.74	17'-0"	5.05

NOTES

1. Concrete shall be 564 - C - 3000.
2. Exposed corners to be chamfered 3/4".

LEGEND ON PLANS

RECOMMENDED BY THE SAN DIEGO REGIONAL STANDARDS COMMITTEE

Coordinator R.C.E. 19807 Dec. 1975 Date

DRAWING NUMBER D-32

SAN DIEGO REGIONAL STANDARD DRAWING

STRAIGHT HEADWALL - TYPE B
(CIRCULAR PIPE)

Revision	By	Approved	Date

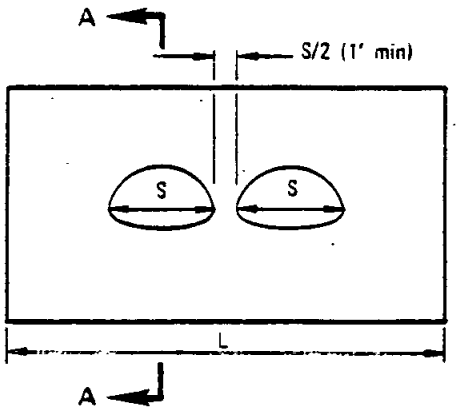

DOUBLE PIPE ELEVATION

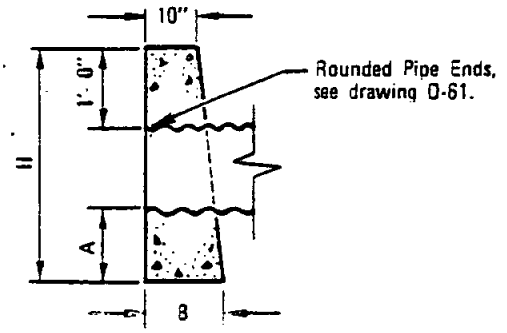

SECTION A–A

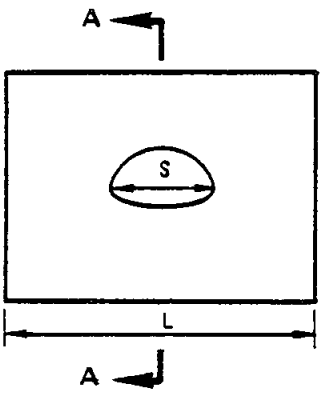

SINGLE PIPE ELEVATION

C.S.P. ARCH SIZE	A	B	H	SINGLE		DOUBLE	
				L	Conc C.Y.	L	Conc C.Y.
18"x 11"	2' - 0"	1' - 2"	3' - 11"	6'	0.83	7' - 3"	0.97
21"x 15"	2' - 0"	1' - 4"	4' - 1"	7'	1.08	9' - 8"	1.46
24"x 18"	2' - 0"	1' - 6"	4' - 4"	8'	1.41	11' - 6"	1.98
28"x 20"	2' - 6"	1' - 8"	5' - 0"	9'	1.97	12' - 6"	2.66
35"x 24"	2' - 6"	2' - 0"	5' - 4"	10'	2.56	14' - 5"	3.60

NOTES

1. Concrete shall be 564 - C - 3000.
2. Exposed corners to be chamfered 3/4".

LEGEND ON PLANS

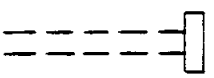

Revision	By	Approved	Date

SAN DIEGO REGIONAL STANDARD DRAWING

STRAIGHT HEADWALL - TYPE B
(C.S.P. ARCH)

RECOMMENDED BY THE SAN DIEGO REGIONAL STANDARDS COMMITTEE

Coordinator R.C.E. 19807 — Dec. 1975 Date

DRAWING NUMBER D-33

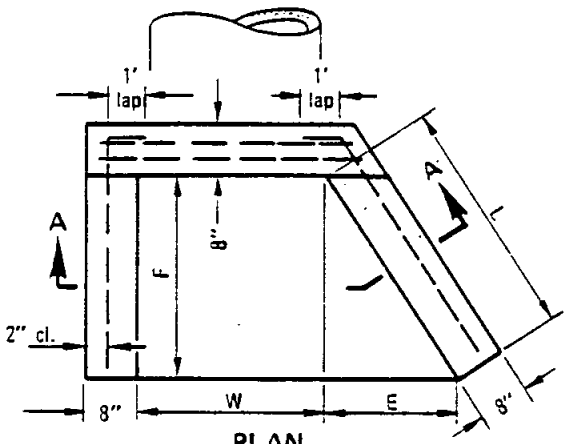

U TYPE PLAN WING TYPE

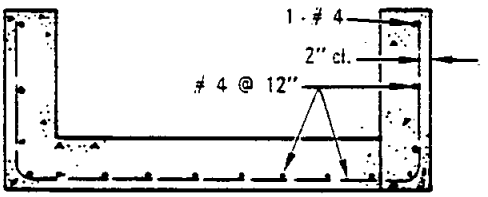

SECTION A–A

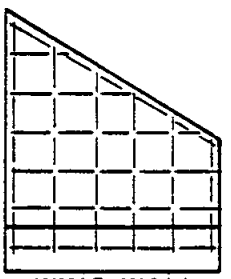

WING WALL REINFORCING

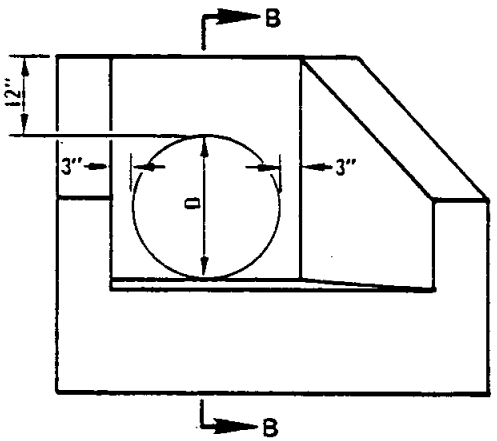

ELEVATION

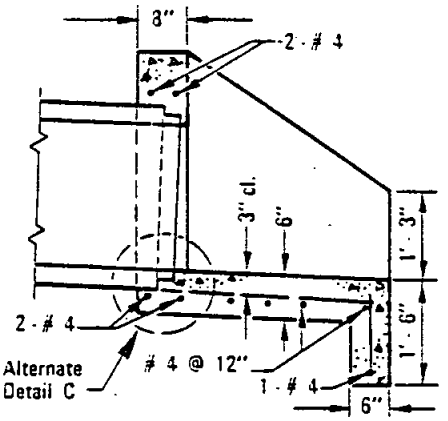

SECTION B–B

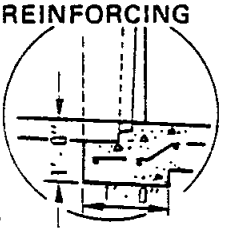

ALT. DETAIL C

DIA OF PIPE	DIMENSIONS			SINGLE PIPE					DOUBLE PIPE				
				W	U TYPE		WING TYPE		W	U TYPE		WING TYPE	
					CONC	STEEL	CONC	STEEL		CONC	STEEL	CONC	STEEL
	L	E	F		C. Y.	LBS.	C. Y.	LBS.		C. Y.	LBS.	C. Y.	LBS.
18"	2'-3 1/8"	1'-3"	1'-10 1/2"	2'-0"	0.55	35	0.63	43	As shown on plans	0.82	53	0.90	61
24"	3'-1 7/8"	1'-9"	2'-7 1/2"	2'-6"	0.79	47	0.93	60		1.22	73	1.36	86
30"	4'-0 5/8"	2'-3"	3'-4 1/2"	3'-0"	1.05	71	1.29	85		1.66	109	1.92	123
36"	4'-11 1/2"	2'-9"	4'-1 1/2"	3'-6"	1.33	88	1.69	114		2.19	136	2.55	162

NOTES:

1. Concrete shall be 564 - C - 3000.
2. Exposed corners to be chamfered 3/4".
3. Multiple pipes to be set a distance of D/2, with a 1' minimum between outside diameters of pipes.
4. Top of headwall shall be placed approximately parallel to profile grade when the grade is 3% or more.
5. Skewed pipes: Dimension W to be increased in width or length due to skew or multiple pipes.
6. For pipe wall thickness greater than 3" use alternate Detail–C.

LEGEND ON PLANS

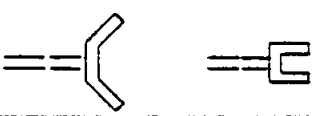

RECOMMENDED BY THE SAN DIEGO REGIONAL STANDARDS COMMITTEE

Coordinator R.C.E. 19807 — Dec. 1975 Date

DRAWING NUMBER D-34

SAN DIEGO REGIONAL STANDARD DRAWING

WING AND U TYPE HEADWALLS FOR 12" TO 36" PIPES

Revision	By	Approved	Date

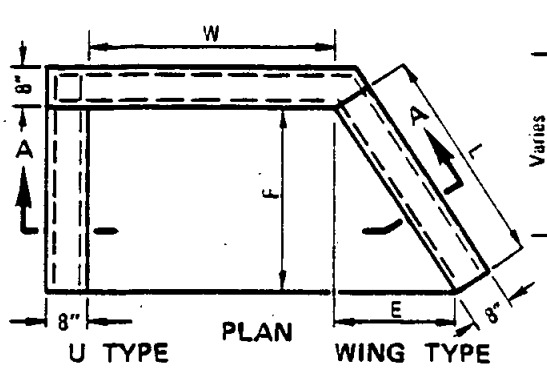

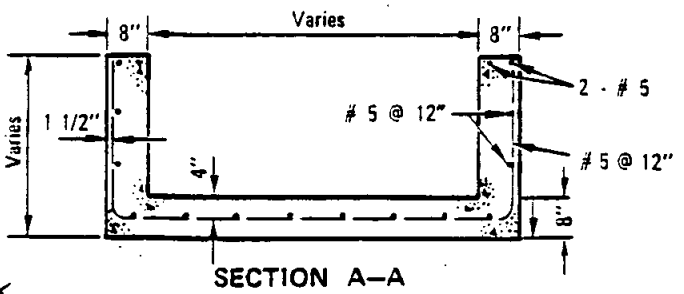

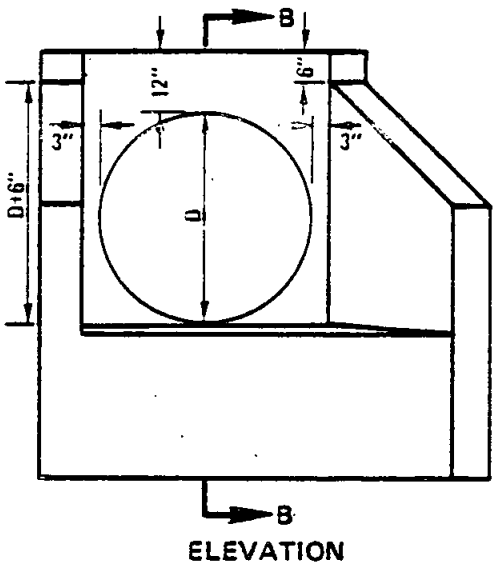

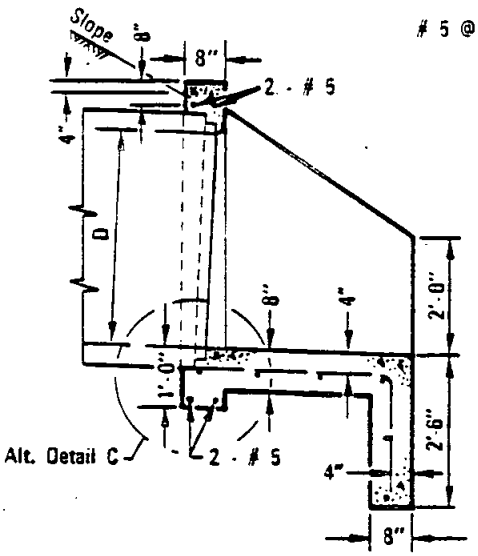

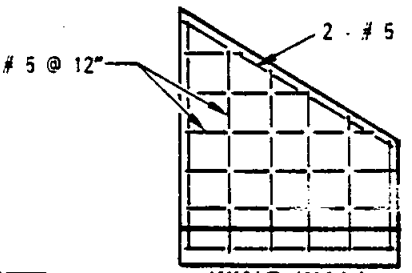

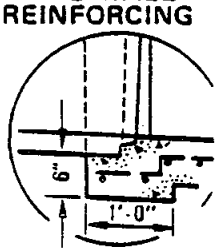

DIA. OF PIPE	DIMENSIONS			SINGLE PIPE					DOUBLE PIPE				
				W	U TYPE		WING TYPE		W	U TYPE		WING TYPE	
	L	E	F		CONC. C.Y.	STEEL LBS.	CONC. C.Y.	STEEL LBS.		CONC. C.Y.	STEEL LBS.	CONC. C.Y.	STEEL LBS.
42"	3'-7 1/4"	2'-0"	3'-0"	4'-0"	1.57	117	1.90	135	AS SHOWN ON PLANS	2.69	190	3.16	214
48"	4'-6"	2'-6"	3'-9"	4'-6"	1.97	153	2.48	184		3.43	252	4.06	288
54"	5'-4 7/8"	3'-0"	4'-6"	5'-0"	2.41	190	3.07	246		4.24	319	5.06	368
60"	6'-3 3/4"	3'-6"	5'-3"	5'-6"	2.88	239	3.75	294		5.13	386	6.17	442
66"	7'-2 1/2"	4'-0"	6'-0"	6'-0"	3.38	294	4.52	356		6.08	454	7.20	516
72"	8'-1 3/8"	4'-6"	6'-9"	6'-6"	3.93	368	5.52	417		7.11	522	8.30	588
78"	9'-0"	5'-0"	7'-6"	7'-0"	4.50	444	6.70	503		8.20	595	9.50	693
84"	9'-10 3/4"	5'-6"	8'-3"	7'-6"	5.21	540	8.15	619		9.50	687	10.80	786

Note: Dimensions E and L apply to wing type only.

NOTES

1. Skewed Pipes: Dimension W to be increased to take care of increased width or length due to skew of multiple pipes.
2. Tops of headwalls, on grade culverts, shall be placed parallel to profile grade when the grades are 3% or more.
3. Concrete shall be 564-C-3000.
4. Exposed corners shall be chamfered 3/4".
5. Multiple pipes shall be set a distance of D/2, with a 1' minimum, between outside diameters of pipes.
6. For pipe wall thickness greater than 3" use Alternate Detail-C.

LEGEND ON PLANS

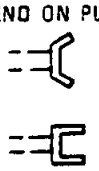

Revision	By	Approved	Date

SAN DIEGO REGIONAL STANDARD DRAWING

WING AND U TYPE HEADWALLS FOR 42" TO 84" PIPES

RECOMMENDED BY THE SAN DIEGO REGIONAL STANDARDS COMMITTEE

Coordinator R.C.E. 19807 — Dec. 1975 Date

DRAWING NUMBER D-35

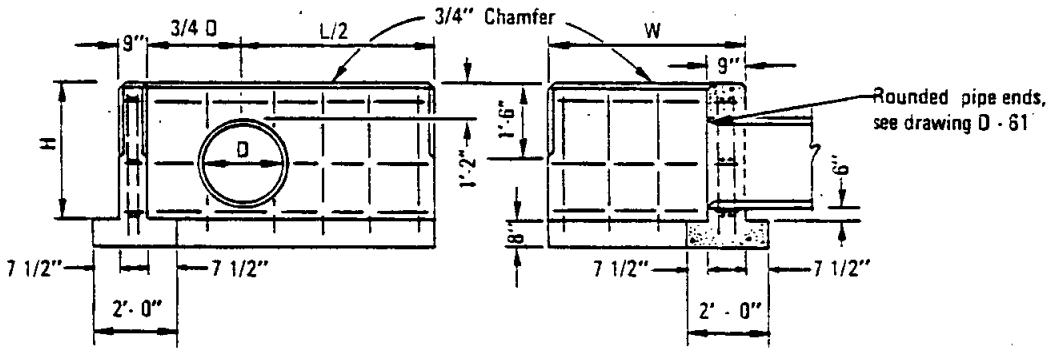

ELEVATION SECTION

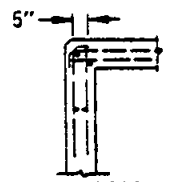

CORNER STEEL DETAIL

D	H	L/2	LENGTH OF W									
			3' - 4"		4' - 10"		6' - 4"		7' - 10"		9' - 4"	
			Steel lbs.	Conc C. Y.	Steel lbs.	Conc C. Y.	Steel lbs.	Conc C. Y.	Steel lbs.	Conc C. Y.	Steel lbs.	Conc C. Y.
12"	2' - 8"	2' - 6"	50	.79	60	.98						
15"	2' - 11"	3' - 0"	55	.91	65	1.11						
18"	3' - 2"	3' - 6"	65	1.04	75	1.25						
21"	3' - 5"	3' - 9"	75	1.15	90	1.36						
24"	3' - 8"	4' - 3"	85	1.29	100	1.51	110	1.74				
27"	3' - 11"	4' - 9"	90	1.44	105	1.67	115	1.91				
30"	4' - 2"	5' - 0"	95	1.55	110	1.80	120	2.05	135	2.29		
33"	4' - 5"	5' - 6"	105	1.71	120	1.97	135	2.23	150	2.48		
36"	4' - 8"	6' - 0"	110	1.88	125	2.15	140	2.41	155	2.68	170	2.95
39"	4' - 11"	6' - 3"			150	2.28	170	2.56	185	2.84	200	3.12
42"	5' - 2"	6' - 9"			155	2.42	175	2.76	190	3.05	210	3.34
45"	5' - 5"	7' - 3"					180	2.97	200	3.27	215	3.57
48"	5' - 8"	7' - 6"					190	3.13	216	3.44	230	3.75
51"	5' - 11"	8' - 0"							220	3.67	235	3.99
54"	6' - 2"	8' - 6"							235	3.91	250	4.24

NOTES

1. Concrete shall be 564 - C - 3000.
2. All reinforcing steel # 4 bars. All vertical and horizontal tie bars 18" maximum spacing.
3. When multiple pipes are used, the distance between pipes shall be D/2 (1' min.). Dimension L/2 is from the center of the pipe nearest to the end of the headwall as shown.

LEGEND ON PLANS

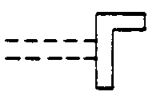

RECOMMENDED BY THE SAN DIEGO REGIONAL STANDARDS COMMITTEE

Coordinator R.C.E. 19807 Date Dec. 1975

DRAWING NUMBER D-36

SAN DIEGO REGIONAL STANDARD DRAWING

L TYPE HEADWALLS CIRCULAR PIPES

Revision	By	Approved	Date

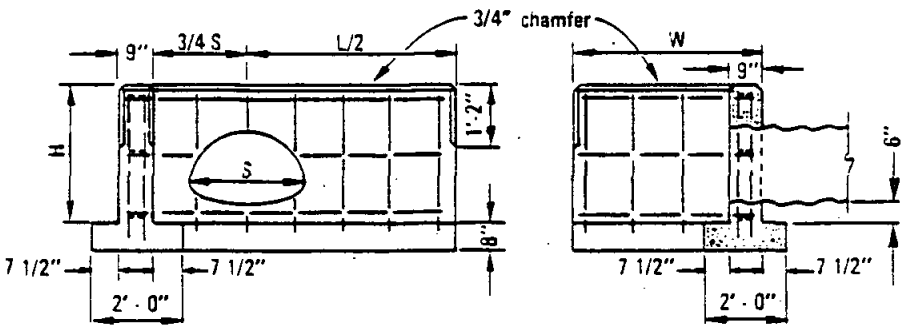

ELEVATION

SECTION

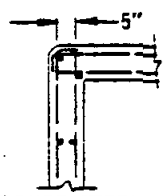

CORNER STEEL DETAIL

C.S.P. ARCH SIZE	H	L/2	LENGTH OF W									
			3'-4"		4'-10"		6'-4"		7'-10"		9'-4"	
			Steel lbs.	Conc C.Y.	Steel lbs.	Conc C.Y.	Steel lbs.	Conc C.Y.	Steel lbs.	Conc C.Y.	Steel lbs.	Conc C.Y.
18"x 11"	2'-7"	2'-9"	50	0.84	60	1.03	70	1.21	80	1.39	90	1.57
21"x 15"	2'-11"	3'-3"	60	1.00	65	1.18	75	1.38	90	1.58	100	1.77
24"x 18"	3'-2"	3'-9"	60	1.07	70	1.32	80	1.53	95	1.74	110	1.94
28"x 20"	3'-4"	4'-3"	70	1.26	80	1.47	90	1.68	100	1.90	115	2.11
35"x 24"	3'-8"	5'-3"	100	1.51	110	1.74	120	1.97	140	2.20	155	2.42
42"x 29"	4'-1"	6'-3"	115	1.82	130	2.06	140	2.31	155	2.55	170	2.83
49"x 33"	4'-5"	7'-3"	130	2.12	145	2.37	155	2.64	170	2.90	185	3.15
57"x 38"	4'-10"	8'-6"	145	2.52	160	2.79	175	3.07	190	3.35	205	3.61
64"x 43"	5'-3"	9'-6"	185	2.89	200	3.11	215	3.48	235	3.77	250	4.06
71"x 47"	5'-7"	10'-6"	200	3.25	215	3.56	235	3.86	250	4.17	270	4.48

NOTES

1. Concrete shall be 564 - C - 3000.
2. All reinforcing steel # 4 bars. All vertical and horizontal tie bars 18" maximum spacing.
3. When multiple pipes are used, the distance between pipes shall be S/2 (1' min.). The dimension L/2 is from the center of the pipe nearest to the end of the headwall as shown.

LEGEND ON PLANS

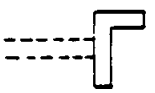

Revision	By	Approved	Date
Elev.	RC	D.S.	7-79

SAN DIEGO REGIONAL STANDARD DRAWING

L TYPE HEADWALLS
(C.S.P. ARCH)

RECOMMENDED BY THE SAN DIEGO REGIONAL STANDARDS COMMITTEE

Coordinator R.C.E. 19807 — Dec. 1975 Date

DRAWING NUMBER D-37

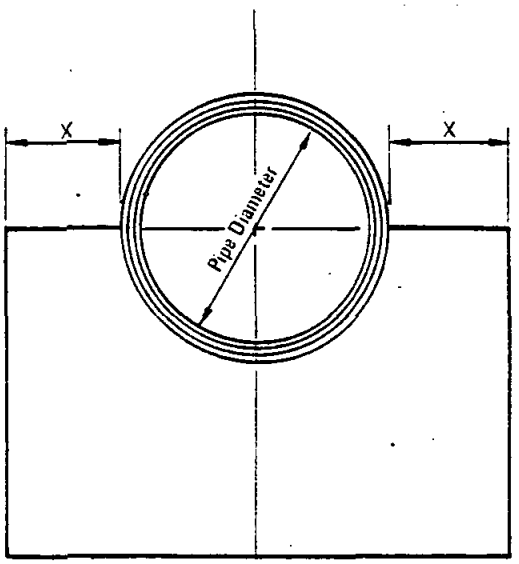

FACE ELEVATION

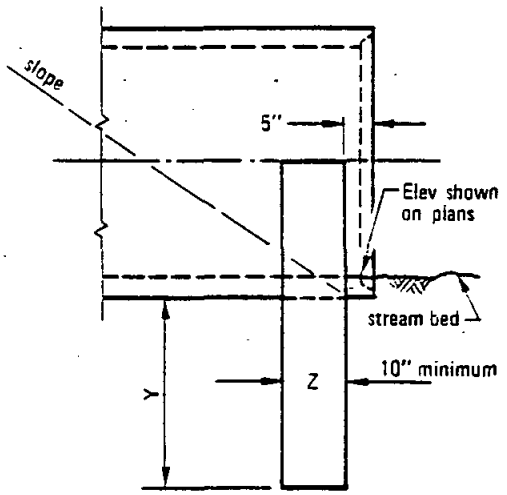

SIDE ELEVATION

PIPE DIAMETER	X	Y	Z
12" to 24"	1' - 0"	2' - 0"	10"
21" to 36"	1' - 6"	2' - 6"	12"
39" to 48"	2' - 0"	3' - 0"	12"
51" to 60"	2' - 6"	3' - 0"	14"
63" & Larger	3' - 0"	3' - 0"	14"

NOTES:

1. A curtain wall shall be used in place of a headwall at culvert ends where extension of the culvert is considered imminent or no fill is retained.
2. Concrete shall be 564-C-3000.
3. Keep the pipe-end clear of obstructions to permit easy placing of culvert extension.

LEGEND ON PLANS

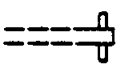

RECOMMENDED BY THE SAN DIEGO REGIONAL STANDARDS COMMITTEE

Coordinator R.C.E. 19607 Dec. 1975 Date

DRAWING NUMBER D-38

SAN DIEGO REGIONAL STANDARD DRAWING

CURTAIN WALL

Revision	By	Approved	Date

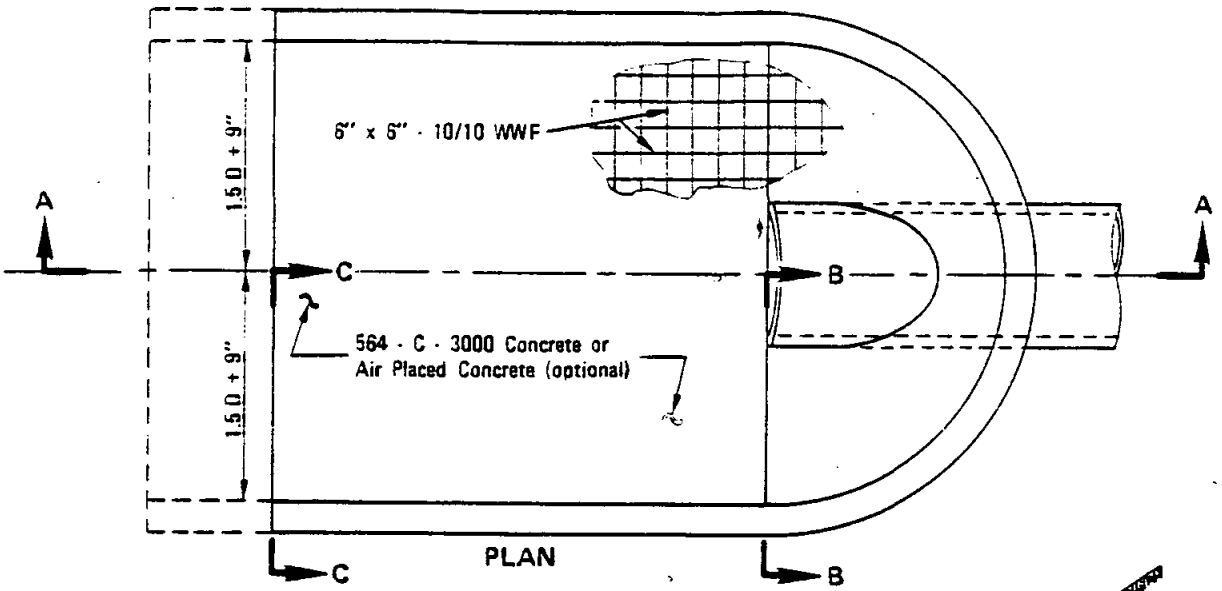

PLAN

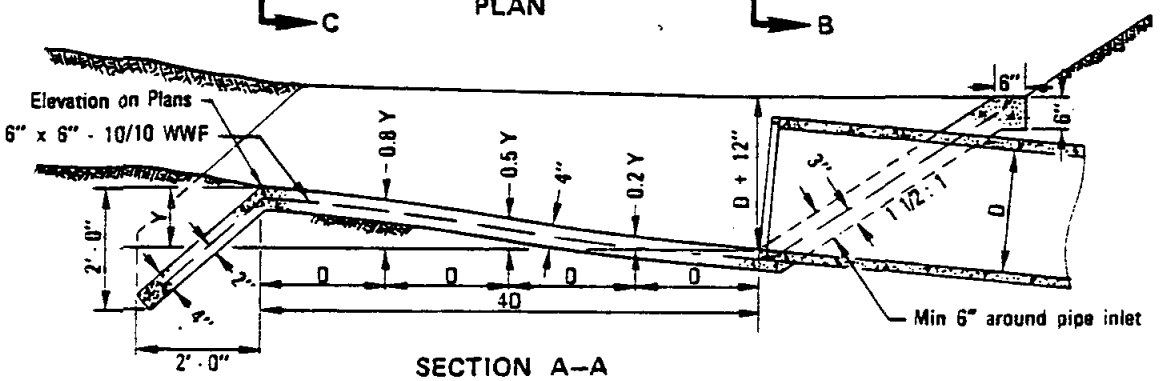

SECTION A–A

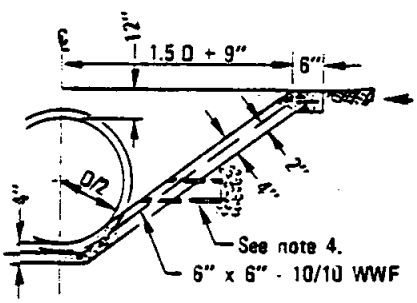

SECTION B–B

Inlet constr. sym. about ℄ except for multiple pipe installations (see note 1)

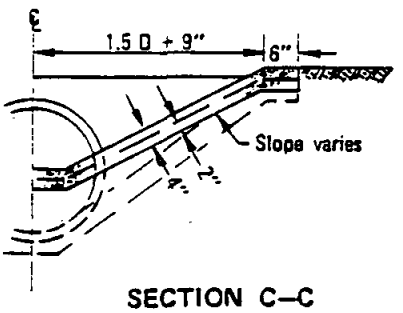

SECTION C–C

NOTES

1. When more than one pipe is used the profile view shown shall hold for the distance across all pipe openings. Sections A-A and B-B shall be from the outermost pipe. The distance between pipes shall be D/2 for round and Span/3 for arch pipe. (12" minimum)
2. Culvert shall be cut off even with apron surface when required by the Agency.
3. Use Inlet Apron only where a flared end section can not be utilized.
4. Place weep holes when required by the Agency.

LEGEND ON PLANS

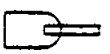

Revision	By	Approved	Date
Sec. A-A	[illegible]	D S	7-79
Sect. B-B	TRP	M. B	10-82

SAN DIEGO REGIONAL STANDARD DRAWING

INLET APRON FOR CULVERTS UP TO 42" DIAMETER

RECOMMENDED BY THE SAN DIEGO REGIONAL STANDARDS COMMITTEE

Coordinator R.C.E. 19807 — Dec. 1975 Date

DRAWING NUMBER D-39.1

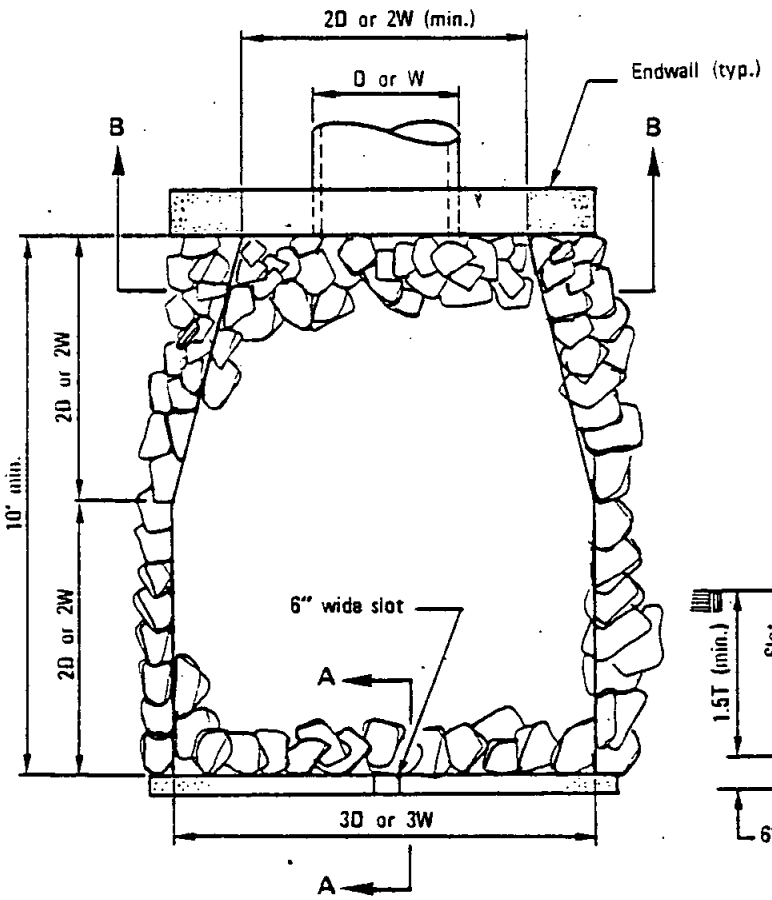

PLAN

D = Pipe Diameter
W = Bottom Width of Channel

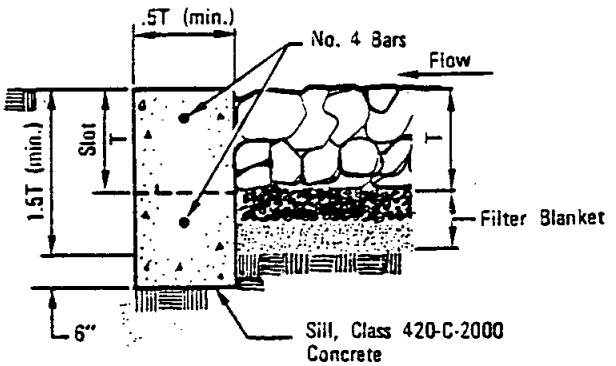

SECTION A–A

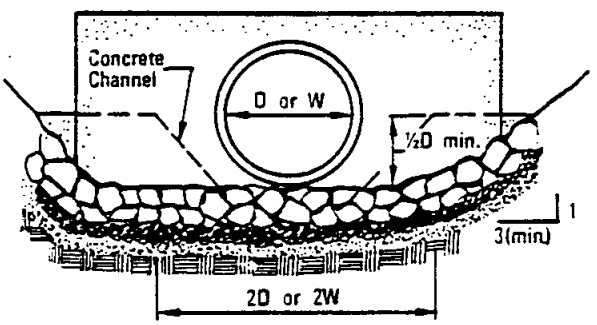

SECTION B–B

NOTES:

1. Plans shall specify:
   A) Rock class and thickness (T).
   B) Filter material, number of layers and thickness.
2. Rip rap shall be either quarry stone or broken concrete (if shown on the plans.) Cobbles are not acceptable.
3. Rip rap shall be placed over a filter blanket which may be either granular material or plastic filter cloth.
4. See standard special provisions for selection of rip rap and filter blanket.
5. Rip rap energy dissipators shall be designated as either Type 1 or Type 2. Type 1 shall be with concrete sill; Type 2 shall be without sill.

RECOMMENDED BY THE SAN DIEGO REGIONAL STANDARDS COMMITTEE	SAN DIEGO REGIONAL STANDARD DRAWING	Revision	By	Approved	Date
Coordinator R.C.E. 19807 Dec. 1975 Date		Sill, filter	TKP	M.B.	10-82
DRAWING NUMBER D-40.1	RIP RAP ENERGY DISSIPATOR				

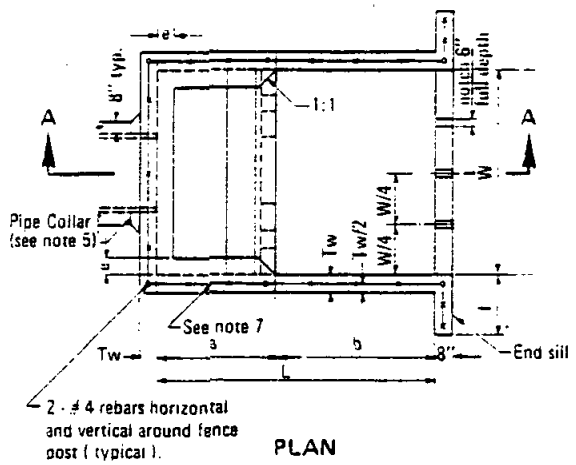

PLAN

Note: Riprap not shown.

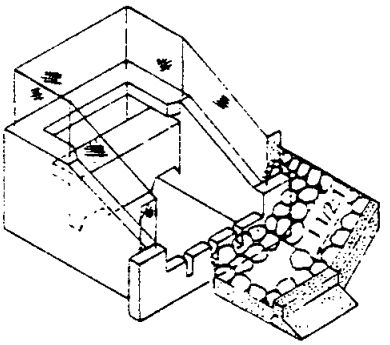

PICTORIAL VIEW

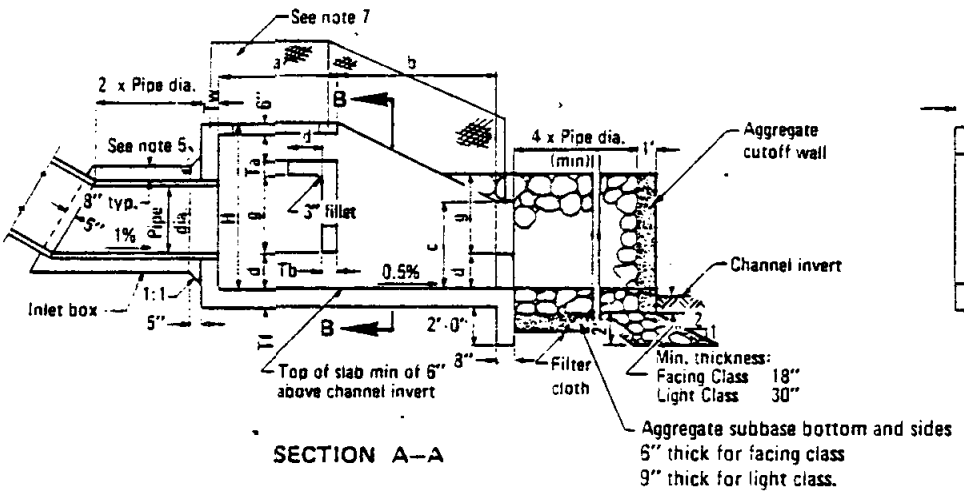

SECTION A–A

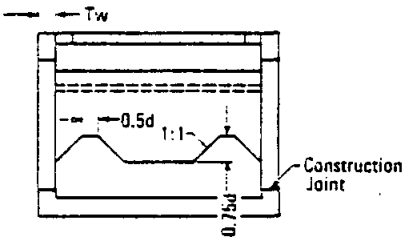

SECTION B–B

NOTES

1. Design:
   Equivalent Fluid Pressure = 60 p.c.f.
   Maximum Outlet Velocity = 35 f.p.s.
2. Concrete shall be 564 - C - 3000.
3. Reinforcing shall conform to ASTM designation A615 and may be grade 40 or 60. Reinforcing shall be placed with 2" clear concrete cover unless noted otherwise. Splices shall not be permitted except as indicated on the plans.
4. For pipe grades not exceeding 20%, inlet box may be omitted.
5. If inlet box is omitted, construct pipe collar as shown.
6. Unless noted otherwise, all reinforcing bar bends shall be fabricated with standard hooks.
7. Five foot high chain link fencing, embed post 18" deep in walls and encase with Class B mortar.
8. In Sandy and Silty soil:
   a) Riprap and aggregate base cutoff wall required at the end of rock apron.
   b) Filter cloth (Polyfilter X or equivalent) shall be installed on native soil and base, minimum of 1 ft. overlaps at joints.
9. Rip rap and subbase classification shall be as shown on plans.

Pipe Dia (in)	18	24	30	36	42	48	54	60	72
Area (sq.ft.)	1.77	3.14	4.91	7.07	9.62	12.57	15.90	19.63	28.27
Max. Q (cfs)	21	38	59	85	115	151	191	236	339
W	5' - 6"	6' - 9"	8' - 0"	9' - 3"	10' - 6"	11' - 9"	13' - 0"	14' - 3"	16' - 6"
H	4' - 3"	5' - 3"	6' - 3"	7' - 3"	8' - 0"	9' - 0"	9' - 3"	10' - 3"	12' - 3"
L	7' - 4"	9' - 0"	10' - 8"	12' - 4"	14' - 0"	15' - 8"	17' - 4"	19' - 0"	22' - 0"
a	3' - 3"	3' - 11"	4' - 7"	5' - 3"	6' - 0"	6' - 9"	7' - 4"	8' - 0"	9' - 3"
b	4' - 1"	5' - 1"	6' - 1"	7' - 1"	8' - 0"	8' - 11"	10' - 0"	11' - 0"	12' - 9"
c	2' - 4"	2' - 10"	3' - 4"	3' - 10"	4' - 5"	4' - 11"	5' - 5"	5' - 11"	6' - 11"
d	0' - 11"	1' - 2"	1' - 4"	1' - 7"	1' - 9"	2' - 0"	2' - 2"	2' - 5"	2' - 9"
e	0' - 6"	0' - 6"	0' - 8"	0' - 8"	0' - 10"	0' - 10"	1' - 0"	1' - 0"	1' - 3"
f	1' - 6"	2' - 0"	2' - 6"	3' - 0"	3' - 0"	3' - 0"	3' - 0"	3' - 0"	3' - 0"
g	2' - 1"	2' - 6"	3' - 0"	3' - 6"	3' - 11"	4' - 5"	4' - 11"	5' - 4"	6' - 2"
Tf	8"			10"		12"			
Tb	7"			9 1/2"		10 1/2"			
Tw	7"			9 1/2"		10 1/2"			
Ta	7"			8"					

Revision	By	Approved	Date
Note 9	[illegible]	D.S.	7-7[illegible]

SAN DIEGO REGIONAL STANDARD DRAWING

CONCRETE ENERGY DISSIPATOR

RECOMMENDED BY THE SAN DIEGO REGIONAL STANDARDS COMMITTEE

[illegible] Dec. 1975

Coordinator R.C.E. 19807 Date

DRAWING NUMBER D-41

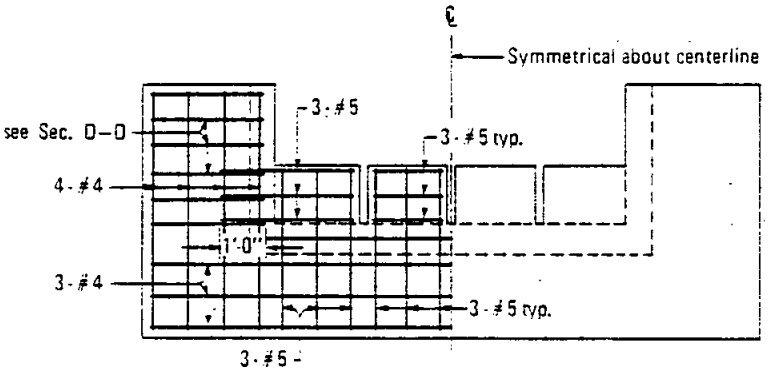

END SILL ELEVATION

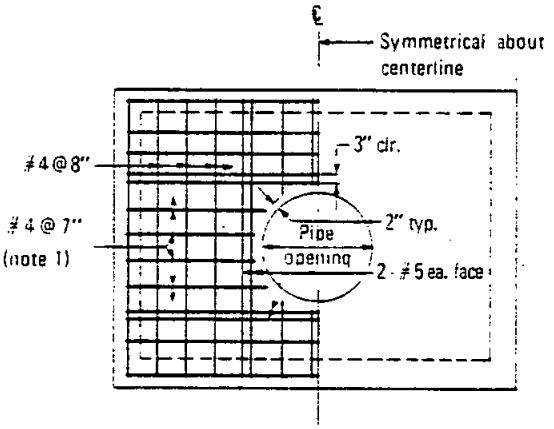

HEADWALL ELEVATION

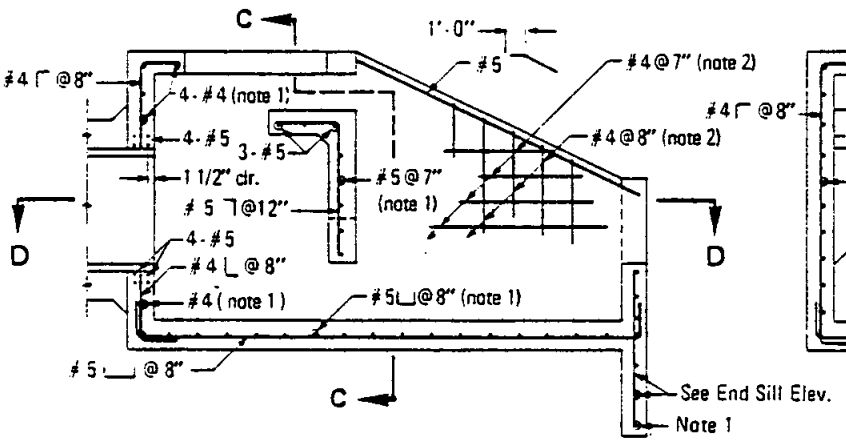

SECTION A–A

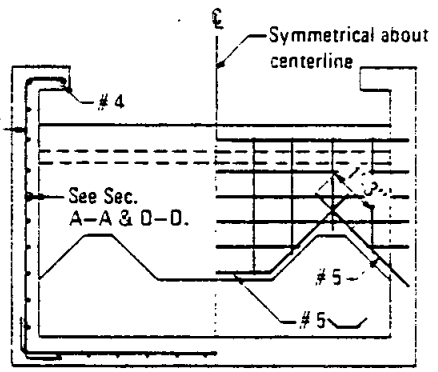

SECTION C–C

NOTES

1. Place reinforcing, as noted, at center wall (or slab).
2. Match location of reinforcing with that in headwall, end sill and foundation slab.
3. All reinforcing shall be placed with 2" concrete cover, unless noted otherwise.

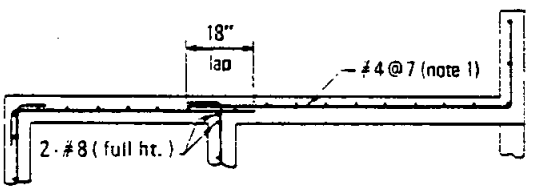

SECTION D–D

RECOMMENDED BY THE SAN DIEGO REGIONAL STANDARDS COMMITTEE	SAN DIEGO REGIONAL STANDARD DRAWING	Revision	By	Approved	Date
Coordinator R.C.E. 19807 — Dec. 1975 Date	CONCRETE ENERGY DISSIPATOR (REINFORCEMENT) 18" TO 30" DIAMETER PIPE				
DRAWING NUMBER D-42					

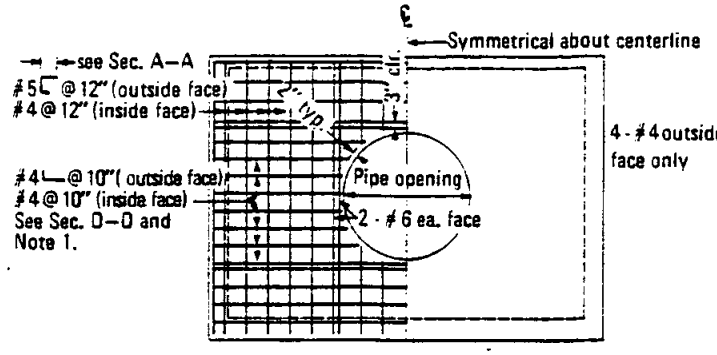

HEADWALL ELEVATION

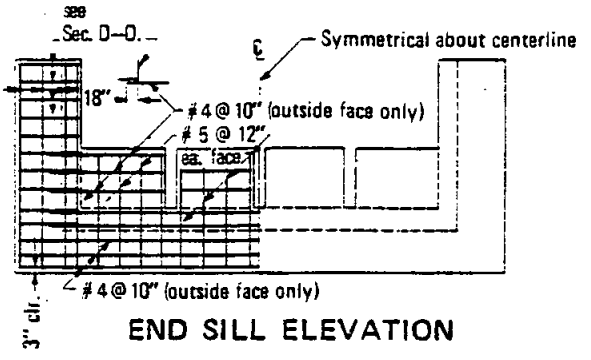

END SILL ELEVATION

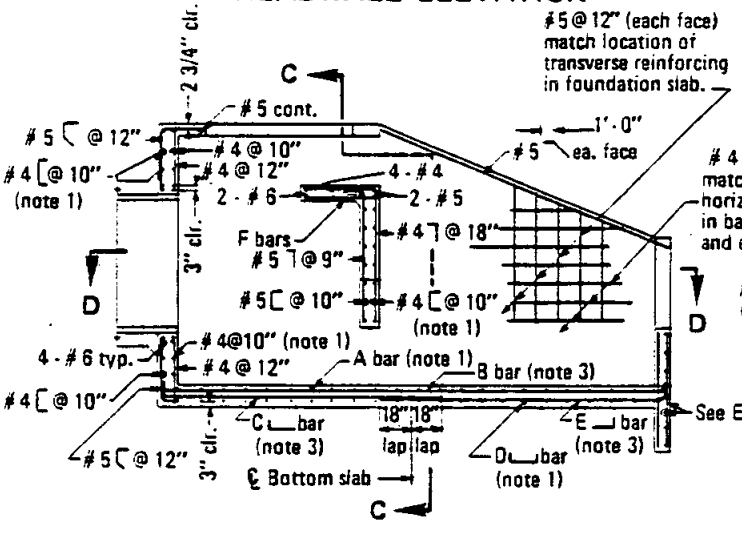

SECTION A–A

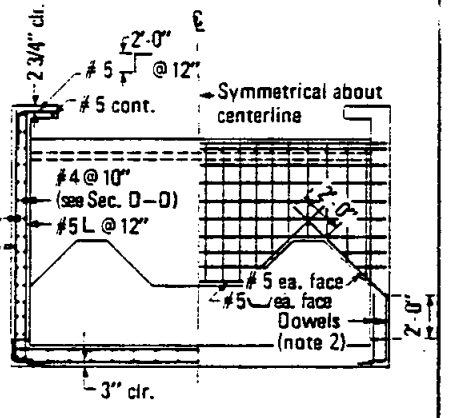

SECTION C–C

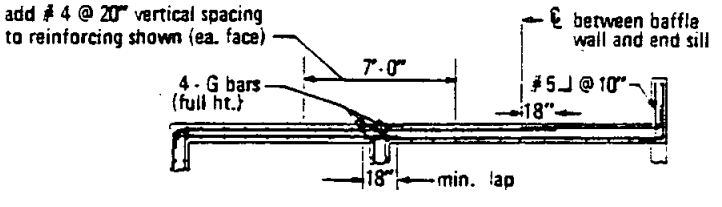

SECTION D–D

NOTES

1. Match location of sidewall reinforcing.
2. Dowels having same size and spacing as wall reinforcing may be used in lieu of continuous bars at contractors option.
3. Match location of headwall or end sill reinforcing.

Pipe dia. (in.)	36	42	48	54	60	72
A bar	#5 @ 12"		#6 @ 12"		#7 @ 12"	
B bar	#5 @ 12"		#6 @ 12"			
C bar	#4 @ 12"		#5 @ 12"			
D bar	#4 @ 12"		#5 @ 12"		#6 @ 12"	
E bar	#4 @ 12"		#5 @ 12"			
F bar	#4 @ 9"		#5 @ 9"			#6@9"
G bar	#7			#11		

Revision	By	Approved	Date

SAN DIEGO REGIONAL STANDARD DRAWING

CONCRETE ENERGY DISSIPATOR (REINFORCEMENT) 36" TO 72" DIAMETER PIPE

RECOMMENDED BY THE SAN DIEGO REGIONAL STANDARDS COMMITTEE

Coordinator R.C.E. 19807 — Dec. 1975 Date

DRAWING NUMBER D-43

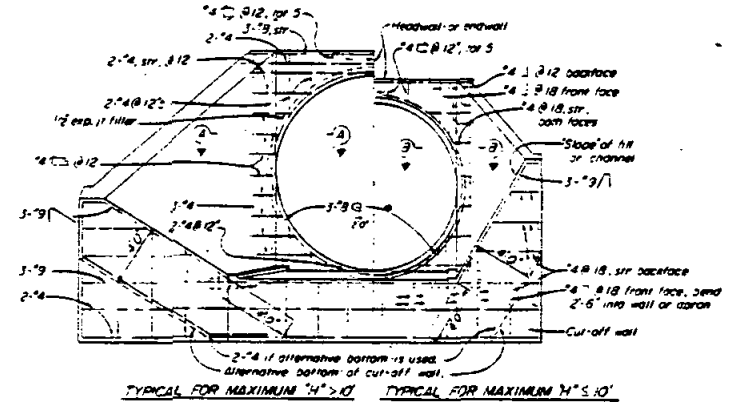

END ELEVATION

if at upstream end; fillet is not shown

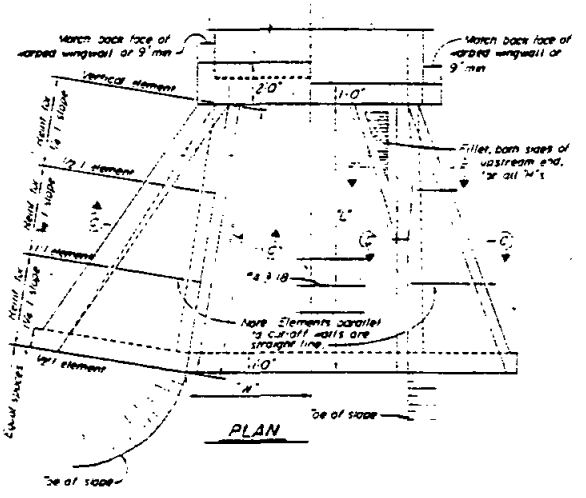

PLAN

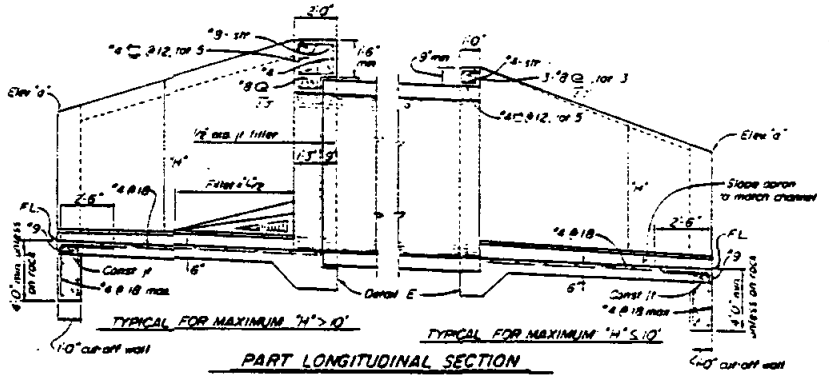

PART LONGITUDINAL SECTION

Note: R.C.P. shown. Metal pipe similar except eliminate the expansion joint and use hook bolts @ 19" ± spacing. Size and length provided by manufacturer

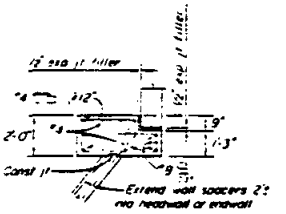

SECTION A-A

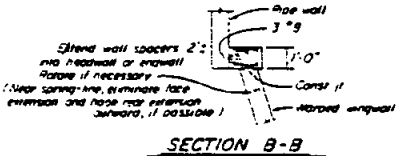

SECTION B-B

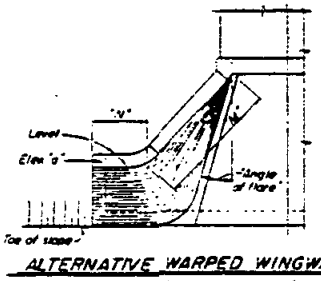

ALTERNATIVE WARPED WINGWALL

Use where additional protection to toe of embankment is required. If at upstream end, fillet is not shown.

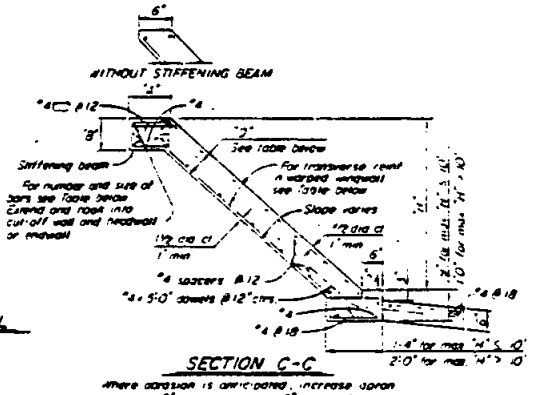

Where abrasion is anticipated, increase apron thickness to 7" min. to provide 2" min reinforcement coverage

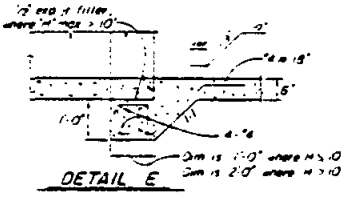

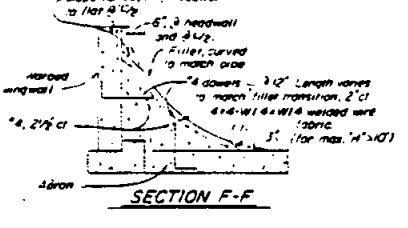

WARPED WINGWALLS																		
WALL DIMENSIONS AND REINFORCING										STIFFENING BEAM DIMENSIONS AND REINFORCING								
Element / Slope	"H"	8' or less	10'	12'	14'	16'	18'	20'		10'	12'	14'	16'	18'	20'	25'	30'	35'	40' or more
1½:1	Front face reinf	#4 @ 12	#4 @ 7	#5 @ 7	#5 @ 5	#5 @ 6	#7 @ 7	#7 @ 6	5"	No beam. Place 2-#5 in each face along top of wall									
	Rear face reinf	#4 @ 12	#4 @ 12	#4 @ 12	#4 @ 12	#4 @ 12	#4 @ 12	#4 @ 12	8"										
3½:1	Front face reinf	#4 @ 12	#4 @ 12	#4 @ 12	#4 @ 12	#4 @ 10	#4 @ 8	#4 @ 6	10"	2" x 1'-0"									
	Rear face reinf	#4 @ 12	#4 @ 12	#4 @ 12	#4 @ 10	#4 @ 7	#4 @ 6	#5 @ 8	12"	3" x 9"									
1½:1	Front face reinf	#4 @ 12	#4 @ 12	#4 @ 12	#4 @ 12	#4 @ 12	#4 @ 12	#4 @ 12	14"	Tot 6'-6"				2" x 1'-6"					
	Rear face reinf	#4 @ 8	#4 @ 8	#4 @ 5	#5 @ 6	#5 @ 7	#5 @ 6	#7 @ 6	16"		Tot 6'-7"			3" x 1'-0"	4" x 1'-0"				
"D" at Cut-off Wall		5"	5"	6"	7½"	8"	9½"	11"	18"					Tot 6'-9"	3" x 2'-0"				
"D" at Headwall / Endwall		6"	6"	6"	8"	9½"	11"	1'-1"	20"						Tot 9'-9"	3" x 1'-6"			

Notes: Walls designed for 2' surcharge; earth load = 120#/cu ft; equivalent fluid pressure = 36#/cu ft. Vary "D" at warped wall uniformly from that at cut-off wall to that at headwall or endwall, for max "H" > 12'. Dimensions "C", "W", "H", "M", "N", Elev "a", "Angle of flare", and end "Slope" (as apply) are shown on the plans.

RECOMMENDED BY THE SAN DIEGO REGIONAL STANDARDS COMMITTEE

Dec. 1975

Coordinator R.C.E. 19807 Date

DRAWING NUMBER D-44

SAN DIEGO REGIONAL STANDARD DRAWING

PIPE CULVERT-HEADWALLS, ENDWALLS & WARPED WINGWALLS

Revision	By	Approved	Date

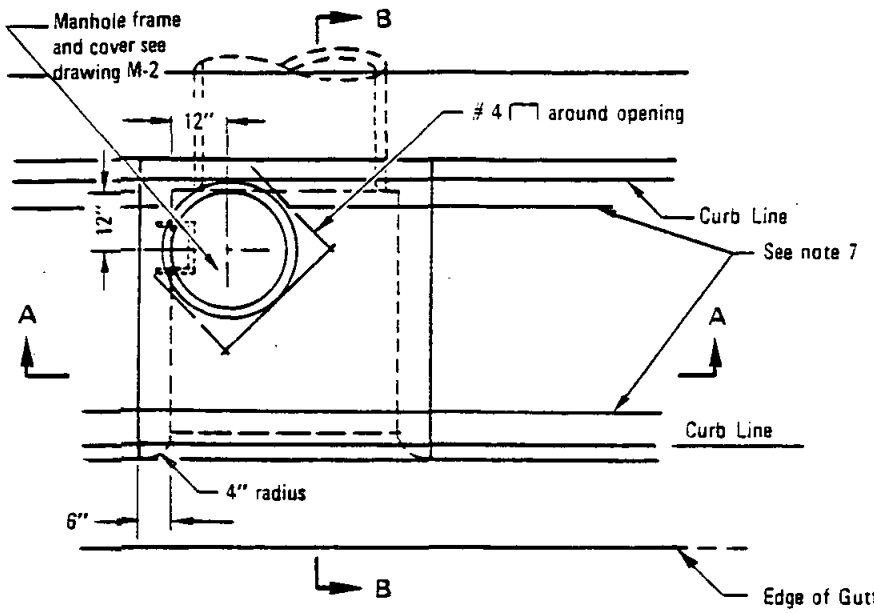

PLAN

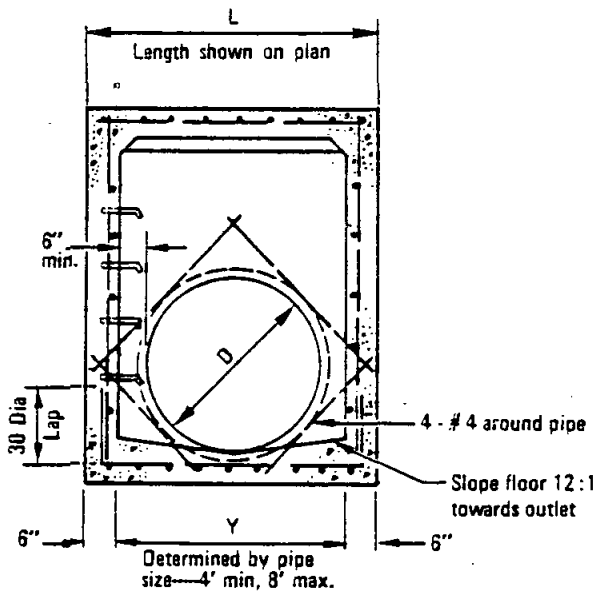

SECTION A–A

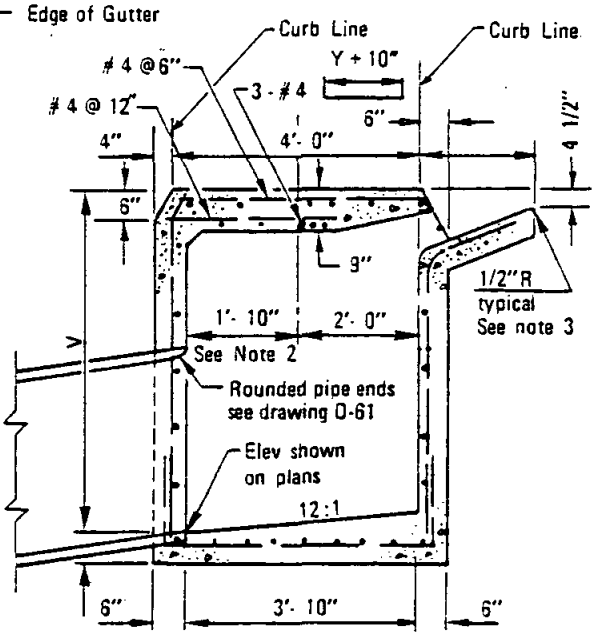

SECTION B–B

NOTES:

1. See Standard Drawings D-11 & D-12.1 for additional notes and details.
2. Dimension shown becomes 2'-0" when opening on both sides. Adjust manhole as required.
3. Exposed edges of concrete shall be rounded with a radius of 1/2".
4. When V exceeds 4' steps shall be installed. See Standard Drawing D-11 for details.
5. Concrete gutter to match adjacent gutters.
6. An expansion joint shall be placed at the ends of the inlet where the curb is to adjoin.
7. Provide 1/4" tooled groove in top slab in line with back of adjacent curb.
8. Maintain 1 1/2" clear spacing between reinforcing and surface unless otherwise noted.

LEGEND ON PLANS

4' Type J Inlet

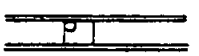

Revision		Approved	Date

SAN DIEGO REGIONAL STANDARD DRAWING

CURB INLET-TYPE J MEDIAN

RECOMMENDED BY THE SAN DIEGO REGIONAL STANDARDS COMMITTEE

Harry P. Holt Oct 1982

Chairman R.C.E. C13768 Date

DRAWING NUMBER D-45

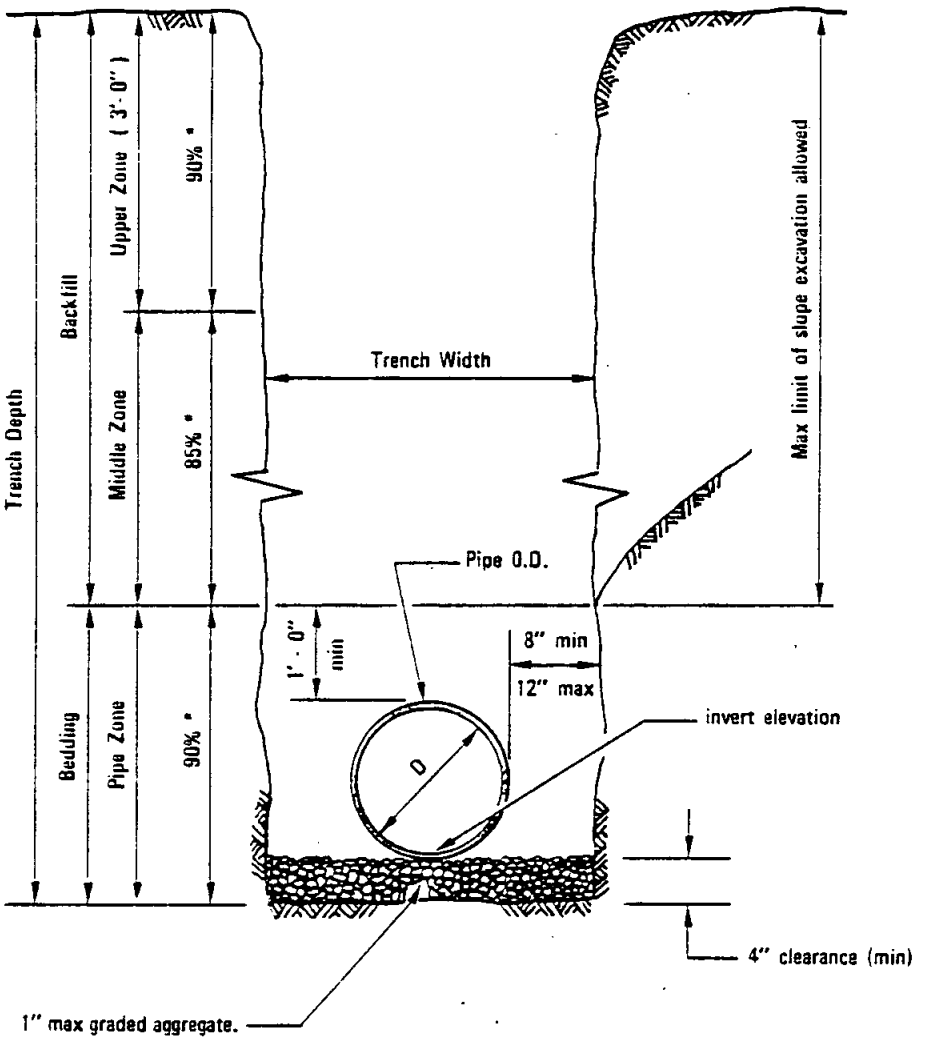

SECTION

NOTES

1. For trenching on improved streets see Standard Drawing G-24.1 or G-25.1 for resurfacing details.
2. (*) indicates minimum relative compaction.

RECOMMENDED BY THE SAN DIEGO REGIONAL STANDARDS COMMITTEE Coordinator R.C.E. 19807 Date Dec. 1975	SAN DIEGO REGIONAL STANDARD DRAWING	Revision	By	Approved	Date
		Reference	TRP	M.B.	10-82
DRAWING NUMBER D-60.1	PIPE BEDDING AND TRENCH BACKFILL FOR STORM DRAINS				

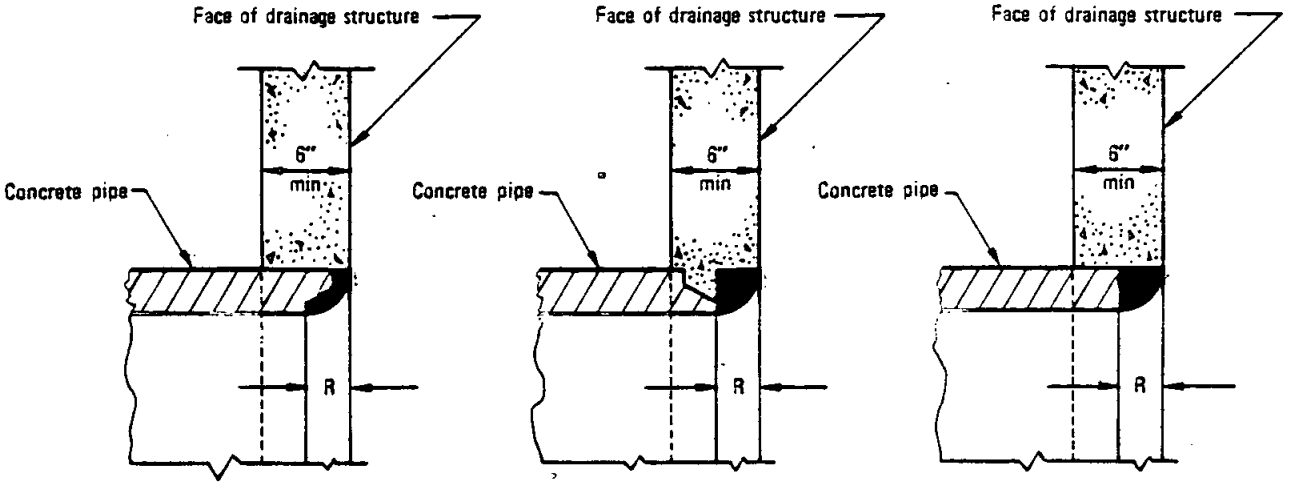

BELL END SPIGOT END CUT END

R = Thickness of pipe

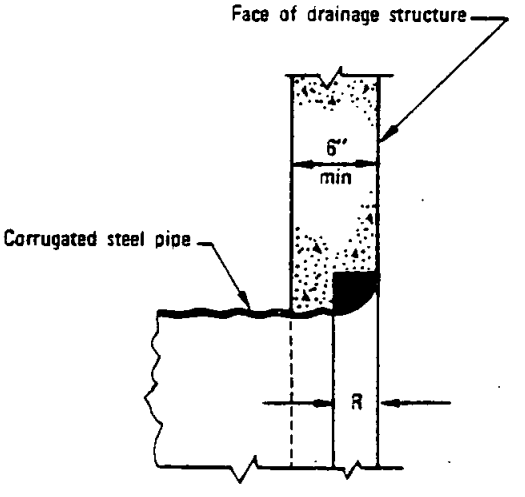

R = $\frac{\text{Inside diameter of pipe}}{10}$

NOTE

The rounded areas may be built up of cement mortar or poured in place with the drainage structure.

Revision	By	Approved	Date
Note	JC	D.S.	7-7

SAN DIEGO REGIONAL STANDARD DRAWING

ROUNDED PIPE ENDS IN DRAINAGE STRUCTURES

RECOMMENDED BY THE SAN DIEGO REGIONAL STANDARDS COMMITTEE

Coordinator R.C.E. 19807 Date Dec. 1975

DRAWING NUMBER D-61

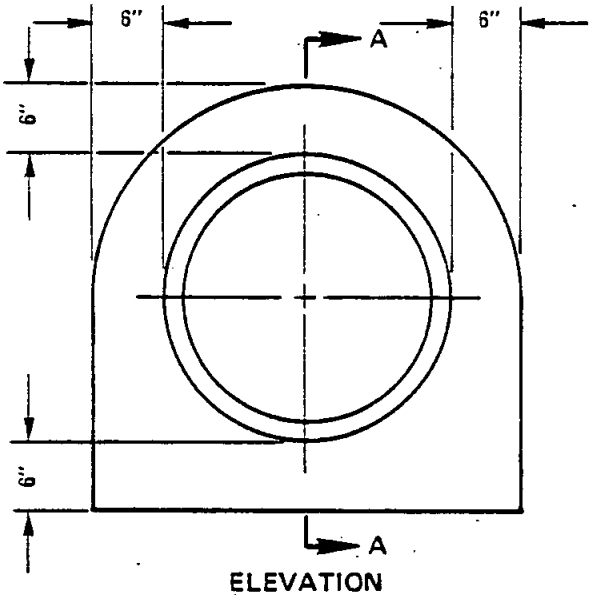

ELEVATION

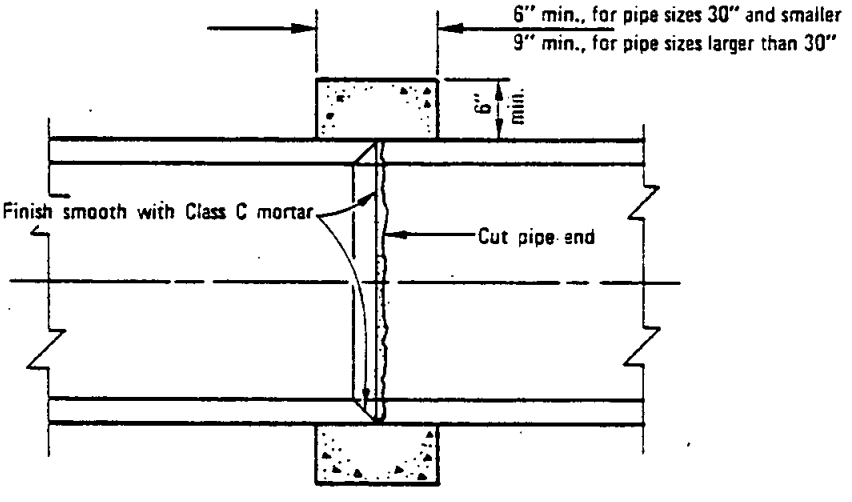

SECTION A–A

NOTES:

1. Pipe collar does not have to be finished if covered, but must have a minimum of 6" of concrete around joint.
2. Concrete shall be 564 - C - 3000

LEGEND ON PLANS

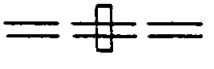

RECOMMENDED BY THE SAN DIEGO REGIONAL STANDARDS COMMITTEE Coordinator R.C.E. 19807 — Dec. 1975 Date	SAN DIEGO REGIONAL STANDARD DRAWING	Revision	By	Approved	Date
DRAWING NUMBER D-62	PIPE COLLAR				

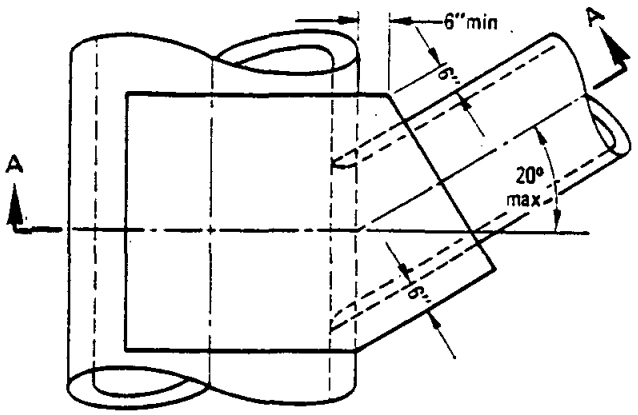

PLAN
SKEWED CONNECTION

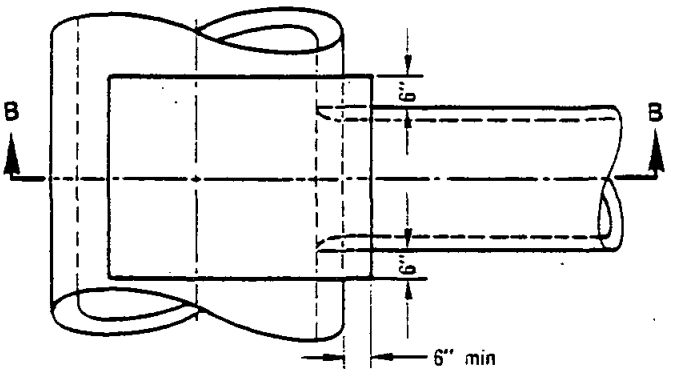

PLAN

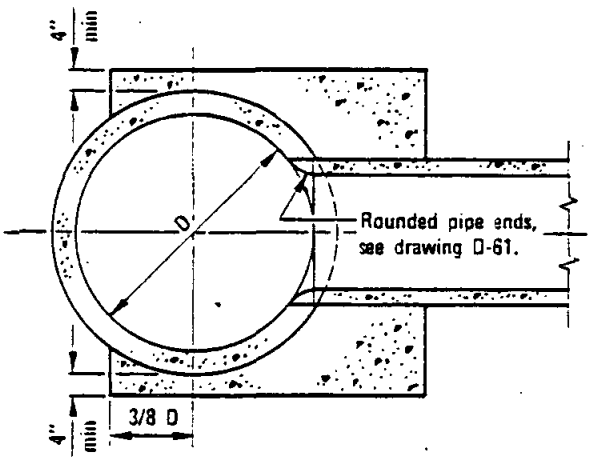

SECTION A–A

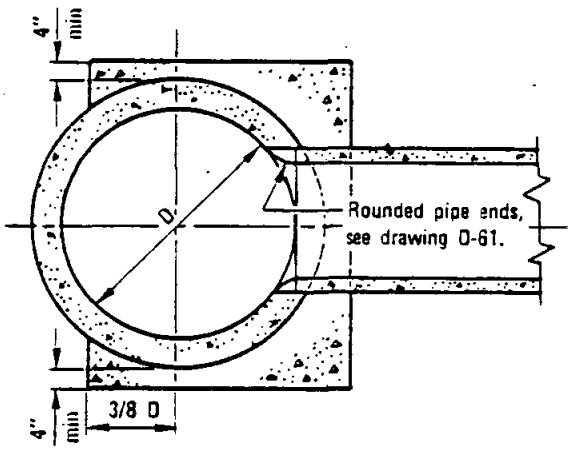

SECTION B–B

NOTES

1. The end of connecting pipe shall not project into the waterway of the larger pipe.
2. The larger pipe shall not be less than 24" I.D.
3. The smaller pipe shall not be more than 2/3 the size of the larger pipe.
4. Concrete shall be 470 - C - 2000.

LEGEND ON PLANS

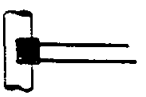

Revision	By	Approved	Date

SAN DIEGO REGIONAL STANDARD DRAWING

CONCRETE LUG

RECOMMENDED BY THE SAN DIEGO REGIONAL STANDARDS COMMITTEE

Coordinator R.C.E. 19807 — Dec. 1975 Date

DRAWING NUMBER D-63

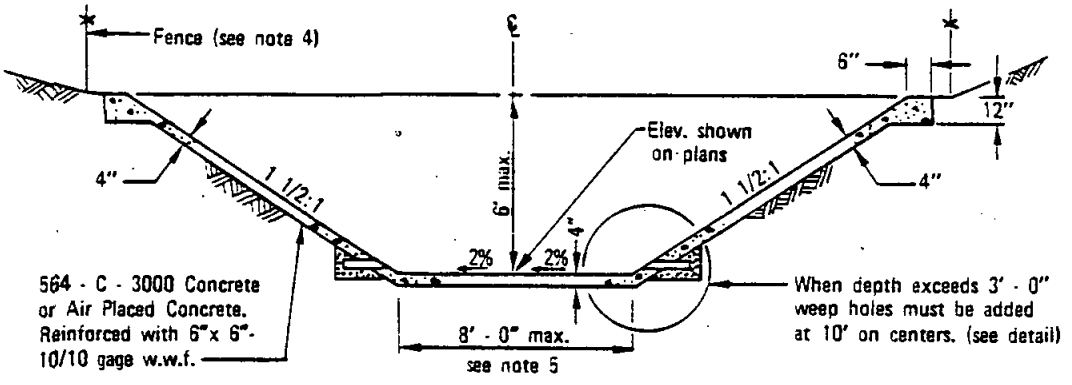

TYPICAL SECTION

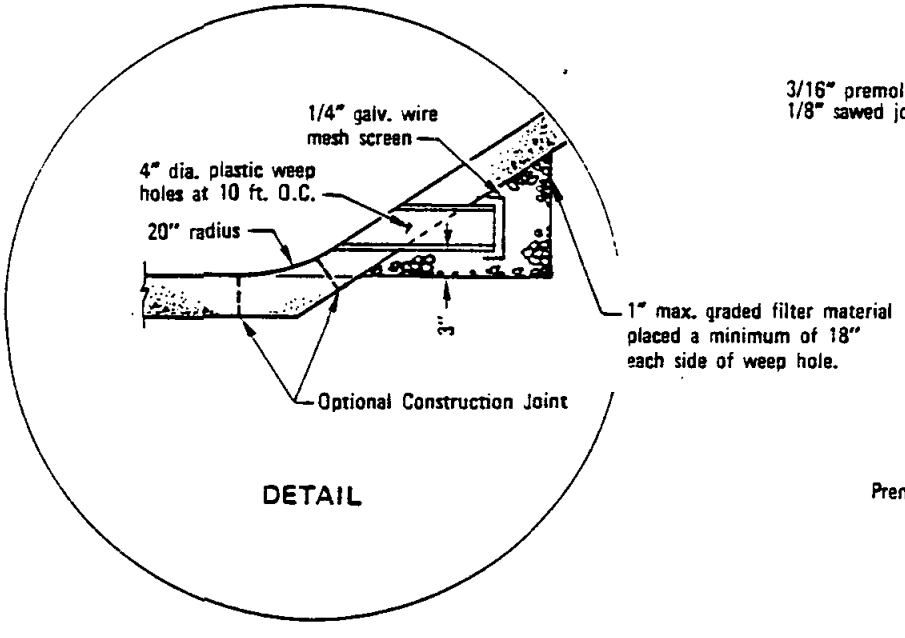

DETAIL

3/16" premolded joint material or 1/8" sawed joint filled with mastic

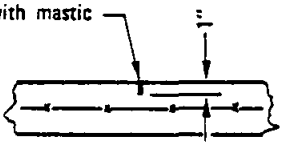

WEAKENED PLANE JOINT

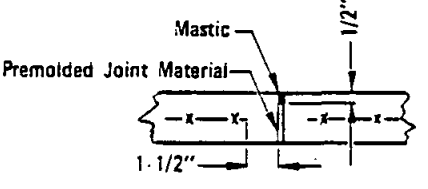

EXPANSION JOINT

NOTES

1. A.C. or clay pipe may be substituted for plastic pipe at weep holes.
2. Weakened plane joints shall be placed every 12' to 15'. Expansion joints shall be placed at all changes of section and at ends of curves.
3. Cutoff walls shall be constructed at each end of the channel along the full width of section. See Standard Drawing D-72.
4. Chainlink fence shall be as required by Agency.
5. For bottom widths greater than 8 feet see Standard Drawing D-71.
6. Reinforcement shown is minimum.

LEGEND ON PLANS

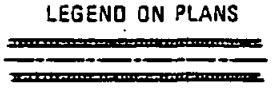

RECOMMENDED BY THE SAN DIEGO REGIONAL STANDARDS COMMITTEE	SAN DIEGO REGIONAL STANDARD DRAWING	Revision	By	Approved	Date
Coordinator R.C.E. 19807 Date Dec. 1975	MINOR DRAINAGE CHANNEL				
DRAWING NUMBER D-70					

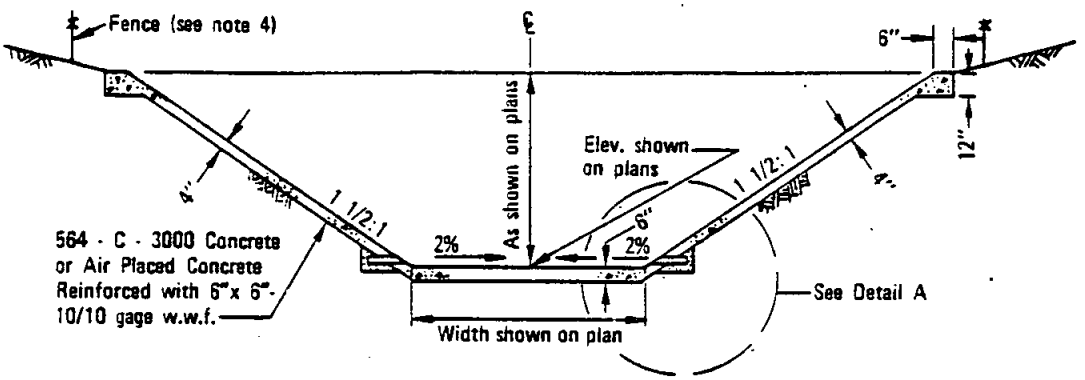

TYPICAL SECTION

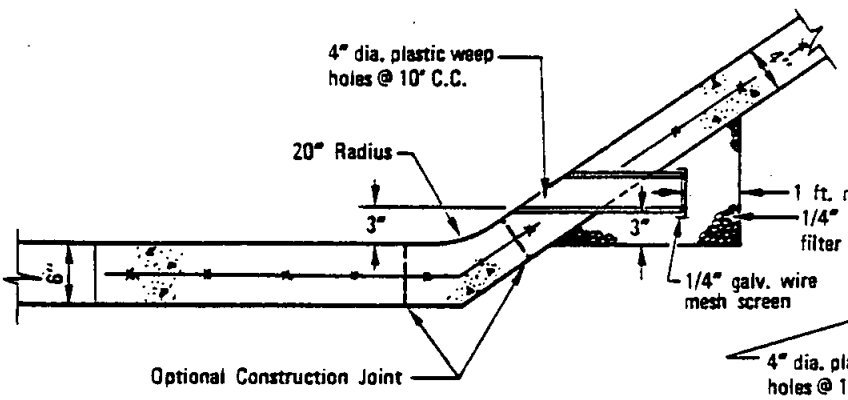

DETAIL A

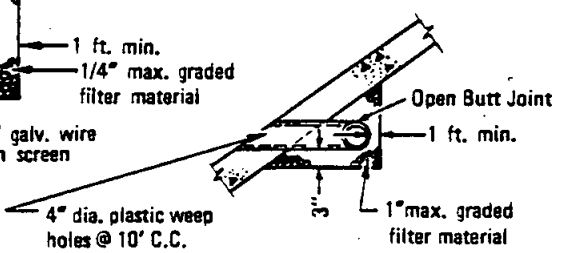

ALT. CONTINUOUS DRAIN

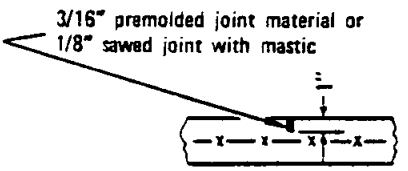

WEAKENED PLANE JOINT

NOTES

1. A.C. or clay pipe may be substituted for plastic pipe at weep holes.
2. Weakened plane joints shall be placed every 12' to 15'. Expansion joints shall be placed at all changes of section and at ends of curves.
3. Cutoff walls shall be constructed at each end of the channel along the full width of section. See Standard Drawing D-72.
4. Chainlink fence shall be as required by Agency.
5. Reinforcement shown is minimum.

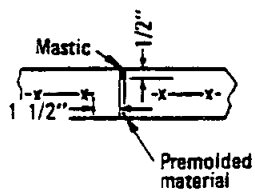

EXPANSION JOINT

LEGEND ON PLANS

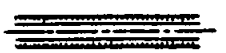

Revision	By	Approved	Date

SAN DIEGO REGIONAL STANDARD DRAWING

MAJOR DRAINAGE CHANNEL

RECOMMENDED BY THE SAN DIEGO REGIONAL STANDARDS COMMITTEE

Coordinator R.C.E. 19807 Date Dec. 1975

DRAWING NUMBER D-71

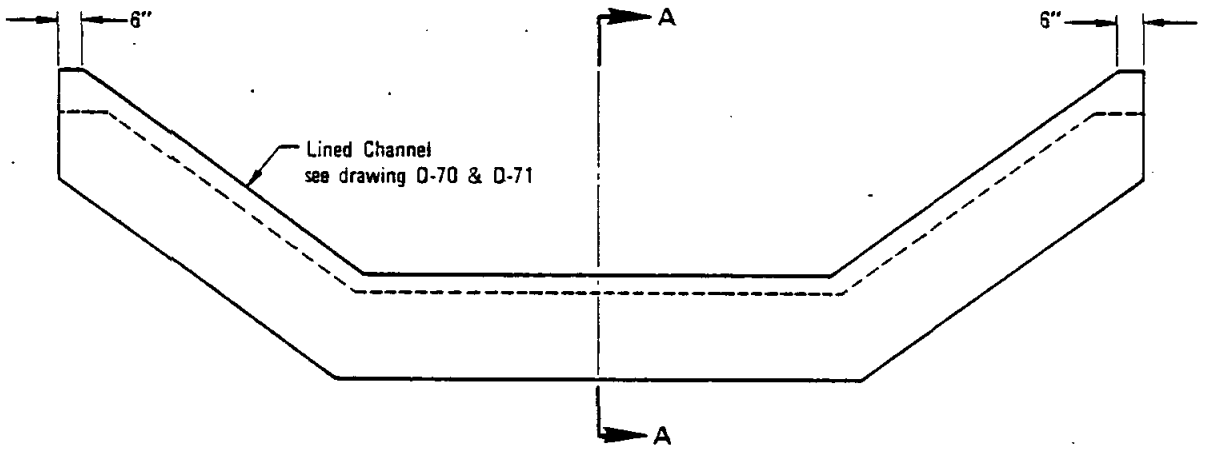

ELEVATION

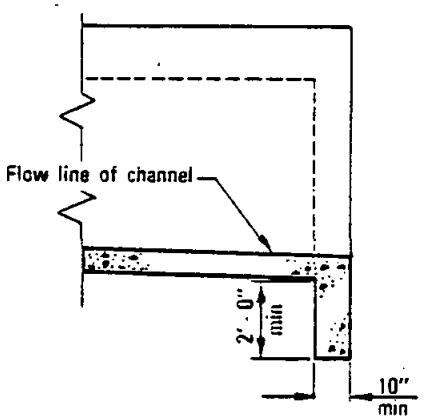

SECTION A–A

NOTES

1. Thickness and wall depth shall be as shown on plan.
2. Reinforcing in cutoff wall shall be the same as that required in channel.
3. Concrete shall be 564-C-3000.

LEGEND ON PLANS

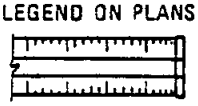

RECOMMENDED BY THE SAN DIEGO REGIONAL STANDARDS COMMITTEE	SAN DIEGO REGIONAL STANDARD DRAWING	Revision	By	Approved	Date
Coordinator R.C.E. 19807 Dec. 1975 Date	CUTOFF WALL FOR DRAINAGE CHANNEL				
DRAWING NUMBER D-72					

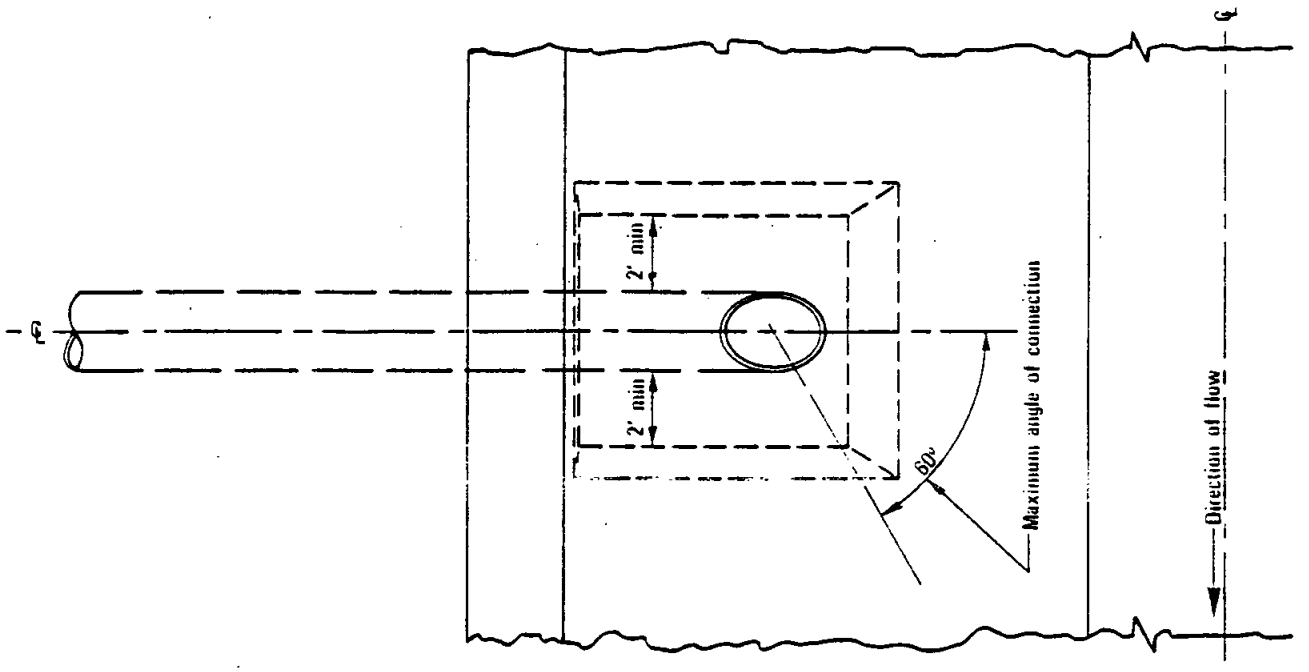

PLAN

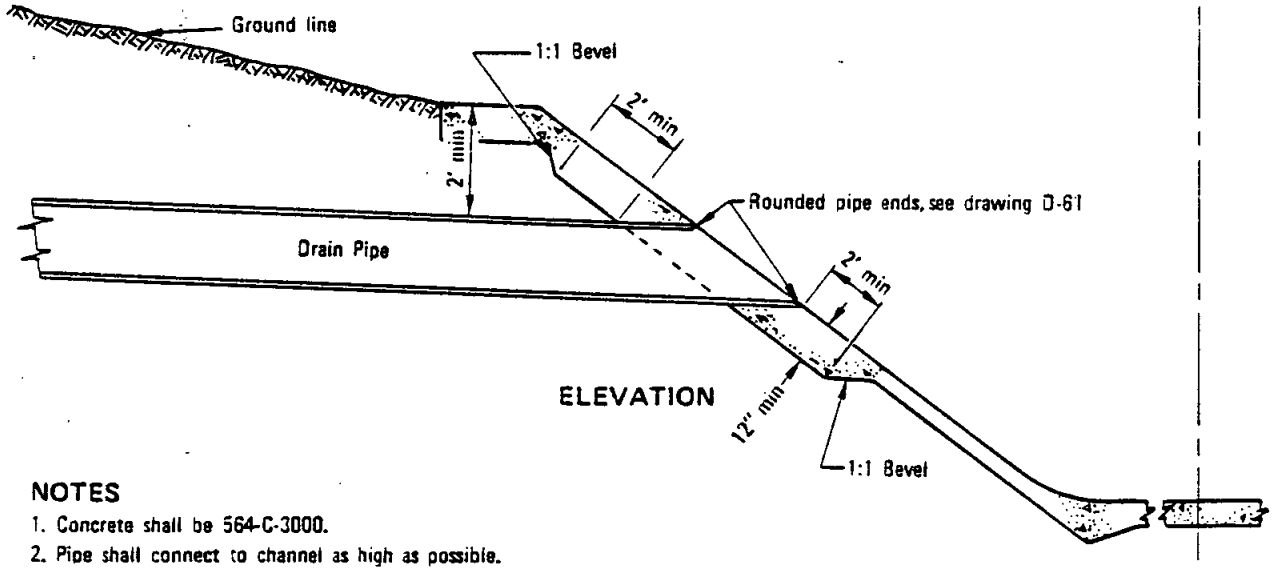

ELEVATION

NOTES

1. Concrete shall be 564-C-3000.
2. Pipe shall connect to channel as high as possible.
3. The maximum angle of connection is 60° downstream. In no case shall a pipe angle upstream.

LEGEND ON PLANS

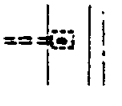

Revision	By	Approved	Date

SAN DIEGO REGIONAL STANDARD DRAWING

PIPE TO CHANNEL CONNECTION

RECOMMENDED BY THE SAN DIEGO REGIONAL STANDARDS COMMITTEE

Coordinator R.C.E. 19807 — Dec. 1975 Date

DRAWING NUMBER D-73

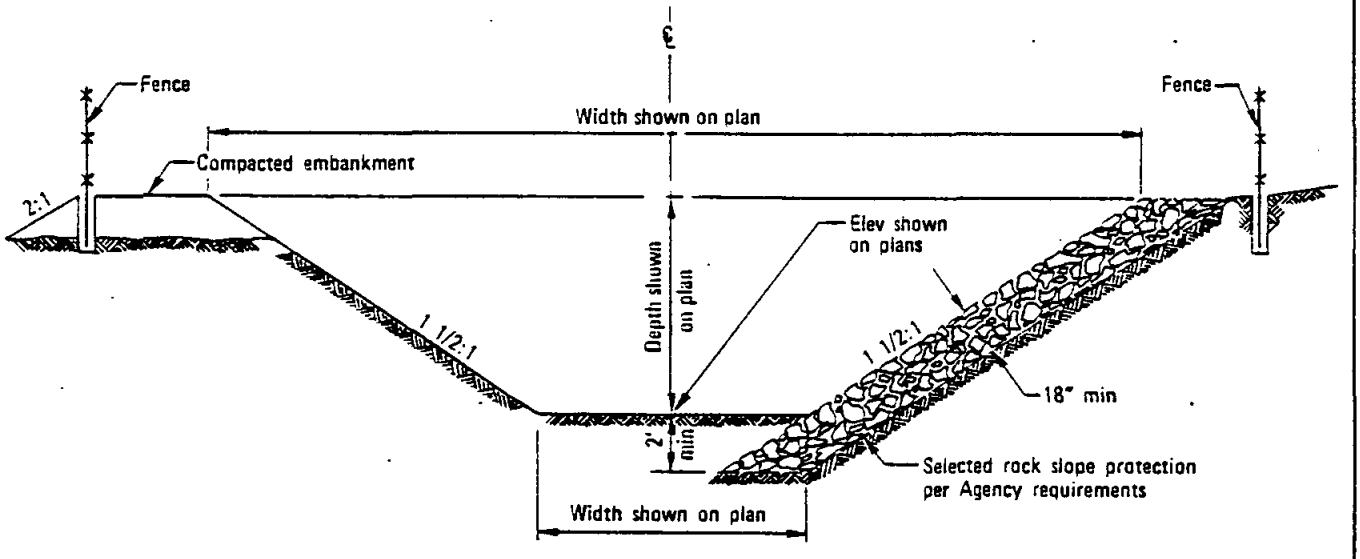

TYPICAL SECTION

NOTE

The following shall be as required by Agency:

a) Low flow channel
b) Filter blanket
c) Cutoff wall
d) Fence

LEGEND ON PLANS

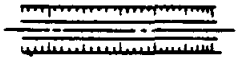

RECOMMENDED BY THE SAN DIEGO REGIONAL STANDARDS COMMITTEE Coordinator R.C.E. 19807 Date Dec. 1975	SAN DIEGO REGIONAL STANDARD DRAWING	Revision	By	Approved	Date
	GRADED EARTH CHANNEL				
DRAWING NUMBER D-74					

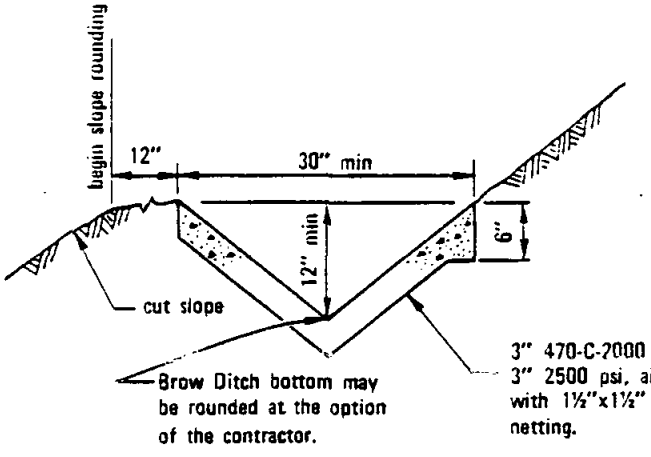

TYPE A

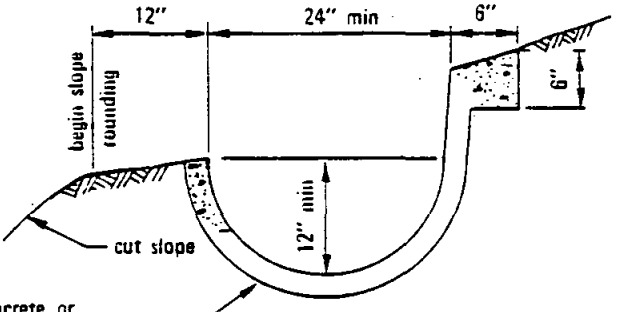

TYPE B

BROW DITCH

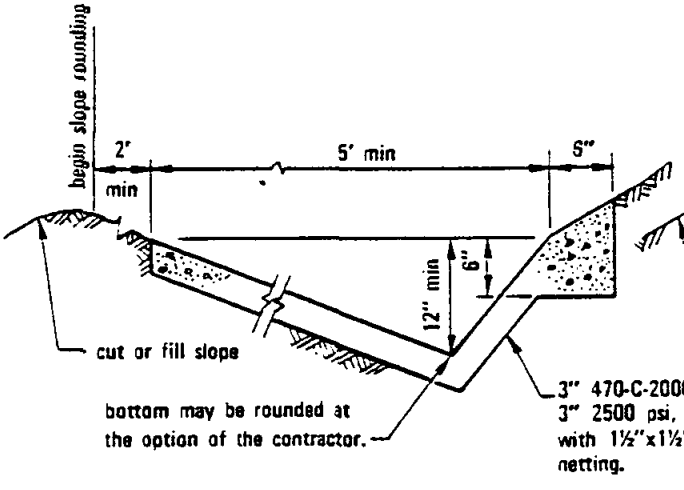

TYPE C

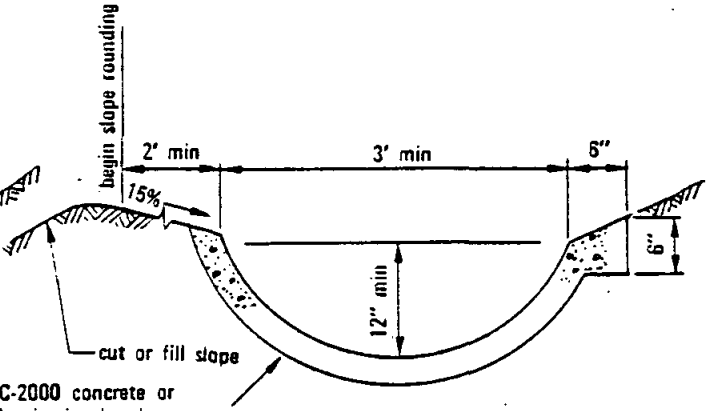

TYPE D

TERRACE DITCH

NOTES

1. Longitudinal slope of lined ditch shall be 2% minimum.
2. Over slope down ditches shall employ 6" thickened edge section at both sides of ditch.

LEGEND ON PLANS

Revision	By	Approved	Date
Ditch type	RC	D.S.	7-79
A.P.C.	TRK	M.B.	10-82

SAN DIEGO REGIONAL STANDARD DRAWING

DRAINAGE DITCHES

RECOMMENDED BY THE SAN DIEGO REGIONAL STANDARDS COMMITTEE

Coordinator R.C.E. 19807 — Dec. 1975 Date

DRAWING NUMBER D-75.1

SPAN	2'		3'			4'				5'						6'							7'					
HEIGHT	6	2'	2'	3'	3'	2'	3'	4'	4'	2'	3'	4'	5'	5'	5'	2'	3'	4'	5'	5'	6'	6'	6'	7'	7'	7'	7'	7'
STRENGTH CLASSIFICATION	A	A	A	A	B	A	A	A	B	C	A	A	B	A	C	D	A	B	C	A	B	C	D	A	B	C	D	E
MAX FILL OVER TOP	ft	99	9	36	36	66	29	17	29	57	50	11	21	12	27	46	10	18	10	10	18	25	36	9	17	25	36	45
Concrete (cu yd per lin ft)	Top Slab	ft	6	6	6½	6½	8	7	7	7	8	7½	7½	8	8½	9	7½	8	8½	8½	9	9½	10	8½	9	9½	10	11
	Bottom Slab	ft	6	6	6½	6½	8	7	7	7	8	7½	7½	8	8½	9	7½	8	8½	8½	9	9½	10	8½	9	9½	10	11
	Sidewalls	ft	6	6	6	6	7	6	6	6	6	6	6	6	6	6	6	6	6	6	6	6	6	6	6	6	6	6
Reinforcing Steel (lbs)	"a" Bars	Size Bar #	4	4	4	4	5	4	4	4	5	4	4	4	5	5	4	4	5	4	5	5	5	4	5	5	5	5
		Spacing	9½	9½	9½	9½	9	9	9½	9½	9	9	9	9	9½	9½	9	9	9	9	9	9	9½	9	9	9	9½	9
		Length	5-3	5-3	5-3	5-3	6-3	5-3	5-3	5-3	6-3	5-3	5-3	5-3	6-3	6-3	5-3	5-3	6-3	5-3	6-3	6-3	6-3	5-3	6-3	6-3	6-3	7-3
	"d" Bars	Top Slab - No of	2	2	3	3	2	3	3	3	3	2	2	3	3	3	2	2	3	3	3	3	3	2	2	3	3	3
		Bottom Slab - No of	2	2	3	3	2	3	3	3	3	2	2	3	3	3	2	2	3	3	3	3	3	2	2	3	3	3
	"e" Bars	Spacing	18	18	18	18	18	18	18	17½	18	18	18	17	18	18	18	18	18	18	18	18	18	18	18	18	18	18
	Spacers	Number	12	12	12	12	12	12	12	12	14	14	14	14	14	14	12	12	12	12	12	12	12	12	12	12	12	12
	Concrete (cu yd per lin ft)		.27	.28	.33	.37	.31	.29	.33	.36	.40	.43	.32	.37	.36	.41	.40	.44	.51	.34	.43	.48	.53	.37	.40	.45	.53	.57
	Reinf (lbs per lin ft)		29	29	36	36	46	29	29	37	37	46	29	37	37	46	29	37	46	37	46	46	46	37	46	46	46	57

SPAN	7'						8'							10'								12'						
HEIGHT	3'	4'	5'	6'	7'	7'	3'	4'	5'	6'	7'	8'	8'	4'	5'	6'	7'	8'	9'	9'	10'	6'	7'	8'	9'	9'	10'	12'
STRENGTH CLASSIFICATION	A	A	A	A	A	B	A	A	A	A	A	A	B	A	A	A	A	A	A	B	A	A	A	A	A	B	A	A
MAX FILL OVER TOP	ft	16	24	16	24	16	33	16	21	16	21	16	33	16	21	16	24	16	24	16	24	16	24	16	24	16	24	16
Concrete (cu yd per lin ft)	Top Slab	ft	7½	8½	7½	8½	7½	8½	7½	8½	7½	8½	8½	8	9	8	9	8	9	9	9	8	9	8	9	9	9	9
	Bottom Slab	ft	7½	8½	7½	8½	7½	8½	7½	8½	7½	8½	8½	8	9	8	9	8	9	9	9	8	9	8	9	9	9	9
	Sidewalls	ft	7	7	7	7	7	8	7	7	7	7	8	7	7	7	7	7	7	8	7	7	7	7	7	8	7	7
Reinforcing Steel (lbs)	"a" Bars	Size Bar #	5	5	5	5	5	5	5	5	5	5	5	5	5	5	5	5	5	5	5	6	6	6	6	6	6	6
		Spacing	9	9	9	9	9	9	9	9	9	9	9	9	9	9	9	9	9	9	9	11	11	11	11	11	11	11
		Length	8-9	8-9	8-9	8-9	8-9	8-9	8-9	8-9	8-9	8-9	8-9	7-9	7-9	7-9	7-9	7-9	7-9	7-9	7-9	11-11	11-11	11-11	11-11	11-11	11-11	11-11
	"b" Bars	Size Bar #	5	5	5	5	5	5	5	5	5	5	5	5	5	5	5	5	5	5	5	6	6	6	6	6	6	6
		Spacing	9	9	9	9	9	9	9	9	9	9	9	9	9	9	9	9	9	9	9	11	11	11	11	11	11	11
		Dimensions "b"	1'-2	1'-4	1'-3	1'-4	1'-3	1'-4	1'-3	1'-4	1'-3	1'-4	1'-4	1'-6	1'-7	1'-6	1'-7	1'-6	1'-7	1'-6	1'-7	2'-0	2'-0	2'-0	2'-0	2'-0	2'-0	2'-0
		Length	3-3	3-3	3-3	3-3	3-3	3-3	3-3	3-3	3-3	3-3	3-3	2-3	2-3	2-3	2-3	2-3	2-3	2-3	2-3	3-3	3-3	3-3	3-3	3-3	3-3	3-3
	"c" Bars	Size Bar #	5	5	5	5	5	5	5	5	5	5	5	5	5	5	5	5	5	5	5	6	6	6	6	6	6	6
		Spacing	9	9	9	9	9	9	9	9	9	9	9	9	9	9	9	9	9	9	9	11	11	11	11	11	11	11
		Dimensions "c"	1'-4	1'-6	1'-5	1'-6	1'-5	1'-6	1'-5	1'-6	1'-5	1'-6	1'-6	1'-8	1'-9	1'-8	1'-9	1'-8	1'-9	1'-8	1'-9	2'-3	2'-3	2'-3	2'-3	2'-3	2'-3	2'-3
		Length	3-3	3-3	3-3	3-3	3-3	3-3	3-3	3-3	3-3	3-3	3-3	2-3	2-3	2-3	2-3	2-3	2-3	2-3	2-3	3-3	3-3	3-3	3-3	3-3	3-3	3-3
	"d" Bars	Size Bar #	5	5	5	5	5	5	5	5	5	5	5	5	5	5	5	5	5	5	5	6	6	6	6	6	6	6
		Spacing	9	9	9	9	9	9	9	9	9	9	9	9	9	9	9	9	9	9	9	11	11	11	11	11	11	11
		Dimensions "d"	1'-4	1'-6	1'-5	1'-6	1'-5	1'-6	1'-5	1'-6	1'-5	1'-6	1'-6	1'-8	1'-9	1'-8	1'-9	1'-8	1'-9	1'-8	1'-9	2'-3	2'-3	2'-3	2'-3	2'-3	2'-3	2'-3
		Length	3-3	3-3	3-3	3-3	3-3	3-3	3-3	3-3	3-3	3-3	3-3	2-3	2-3	2-3	2-3	2-3	2-3	2-3	2-3	3-3	3-3	3-3	3-3	3-3	3-3	3-3
	"e" Bars	Top Slab - No of	7	8	7	8	7	8	7	8	7	8	8	8	9	8	9	8	9	9	9	10	10	10	10	10	10	10
		Bottom Slab - No of	4	4	4	4	4	4	4	4	4	4	4	3	3	3	3	3	3	3	3	4	4	4	4	4	4	4
		Spacing	18	18	18	18	18	18	18	18	18	18	18	18	18	18	18	18	18	18	18	18	18	18	18	18	18	18
	Spacers	Total Number	56	56	56	56	56	56	56	56	56	56	56	40	40	40	40	40	40	40	40	48	48	48	48	48	48	48
	Concrete (cu yd per lin ft)		.48	.56	.57	.60	.53	.64	.70	.66	.62	.73	.69	.56	.63	.70	.60	.75	.80	.60	.65	.73	.84	.92	.75	.80	.85	.106
	Reinf (lbs per lin ft)		101	130	114	130	114	143	128	130	128	132	130	118	148	128	134	128	138	134	147	171	178	202	171	178	202	225

Note

For bases of height less than that shown in table, use next greater table height slabs, wall dimensions and reinforcing steel, and make necessary changes in bar lengths, number of spacers and quantities

For reinforcement clearance, except at bottom, see "Miscellaneous Details"

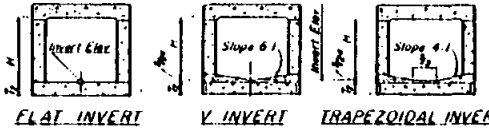

FLAT INVERT

V INVERT

TRAPEZOIDAL INVERT

ALTERNATIVE INVERTS

(When shown)

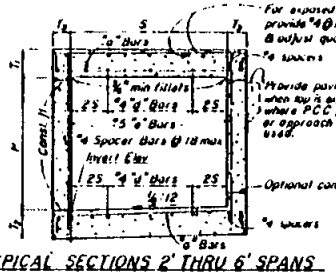

TYPICAL SECTIONS 2' THRU 6' SPANS

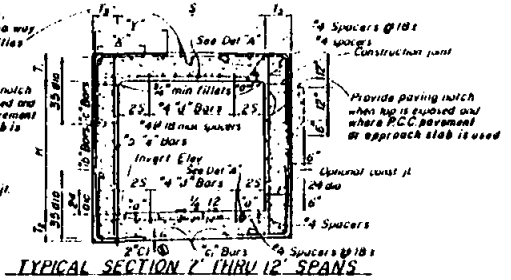

TYPICAL SECTION 7' THRU 12' SPANS

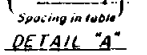

DETAIL "A"

RECOMMENDED BY THE SAN DIEGO REGIONAL STANDARDS COMMITTEE

Chairman R.C.E. 19807 Date Dec. 1975

DRAWING NUMBER D-76

SAN DIEGO REGIONAL STANDARD DRAWING

SINGLE BOX CULVERT

Revision	By	Approved	Date

Revision	By	Approved	Date

SPAN	4'										
HEIGHT	2'			3'				4'			
STRENGTH CLASSIFICATION	A	B	C	A	B	C	D	A	B	C	D
MAX FILL OVER TOP	11	21	32	11	23	34	46	11	23	34	46
Conc. Top Slab T_1	6½	6½	7½	6½	6½	7½	8½	6½	6½	7½	8½
Conc. Bottom Slab T_2	6	7½	8½	6	7½	8½	9½	6	7½	8½	9½
Conc. Sidewalls T_3	6	6	6	6	6	6	6	6	6	6	6
"a" Size Bar #	3	4	4	3	4	4	4	3	4	4	4
"a" Spacing	11	11	9	11	10½	8½	7½	11	10½	8½	7½
"a" Length	[illegible]	[illegible]	[illegible]	[illegible]	[illegible]	[illegible]	[illegible]	[illegible]	[illegible]	[illegible]	[illegible]
"b" or "b1" Size Bar #	[illegible]	[illegible]	[illegible]	[illegible]	[illegible]	[illegible]	[illegible]	[illegible]	[illegible]	[illegible]	[illegible]
"b" or "b1" Spacing	[illegible]	[illegible]	[illegible]	[illegible]	[illegible]	[illegible]	[illegible]	[illegible]	[illegible]	[illegible]	[illegible]
Length "b"	[illegible]	[illegible]	[illegible]	[illegible]	[illegible]	[illegible]	[illegible]	[illegible]	[illegible]	[illegible]	[illegible]
Length "b1"	[illegible]	[illegible]	[illegible]	[illegible]	[illegible]	[illegible]	[illegible]	[illegible]	[illegible]	[illegible]	[illegible]
"c" Size Bar #	[illegible]	[illegible]	[illegible]	[illegible]	[illegible]	[illegible]	[illegible]	[illegible]	[illegible]	[illegible]	[illegible]
"c" Spacing	[illegible]	[illegible]	[illegible]	[illegible]	[illegible]	[illegible]	[illegible]	[illegible]	[illegible]	[illegible]	[illegible]
"c" Length	[illegible]	[illegible]	[illegible]	[illegible]	[illegible]	[illegible]	[illegible]	[illegible]	[illegible]	[illegible]	[illegible]
"d" Dist Bars Top Slab-Tot No	10	6	6	10	6	6	6	10	6	6	6
"d" Dist Bars Bottom Slab-Tot No	6	6	6	6	6	6	6	6	6	6	6
"e" Bars Size Bar #	[illegible]	[illegible]	[illegible]	[illegible]	[illegible]	[illegible]	[illegible]	[illegible]	[illegible]	[illegible]	[illegible]
"e" Bars Spacing	[illegible]	[illegible]	[illegible]	[illegible]	[illegible]	[illegible]	[illegible]	[illegible]	[illegible]	[illegible]	[illegible]
Spacers Number	23			26				22			
Concrete CY per lin ft	0.47	0.51	0.57	0.55	0.57	0.65	0.69	0.59	0.63	0.65	0.79
Reinf Lbs per lin ft	81	74	84	84	79	91	101	87	85	99	111

SPAN	5'													
HEIGHT	2'			3'			4'				5'			
STRENGTH CLASSIFICATION	A	B	C	A	B	C	A	B	C	D	A	B	C	D
MAX FILL OVER TOP	6	24	36	6	24	36	6	23	34	46	6	23	34	46
Conc. Top Slab T_1	6½	7½	8½	6½	7½	8½	6½	7½	9	10½	6½	7½	8½	10½
Conc. Bottom Slab T_2	6½	8	10½	6½	8	10½	6½	8	10	11½	6½	8	10½	11½
Conc. Sidewalls T_3	6	6	6	6	6	6	6	6	6	6	6	6	6	6
"a" Size Bar #	3	4	4	3	4	4	3	4	4	4	3	4	4	4
"a" Spacing	10	8½	10	10	8½	10	10	8½	10	9	10	8½	10½	9
"a" Length	[illegible]	[illegible]	[illegible]	[illegible]	[illegible]	[illegible]	[illegible]	[illegible]	[illegible]	[illegible]	[illegible]	[illegible]	[illegible]	[illegible]
"b" or "b1" Size Bar #	[illegible]	[illegible]	[illegible]	[illegible]	[illegible]	[illegible]	[illegible]	[illegible]	[illegible]	[illegible]	[illegible]	[illegible]	[illegible]	[illegible]
"b" or "b1" Spacing	[illegible]	[illegible]	[illegible]	[illegible]	[illegible]	[illegible]	[illegible]	[illegible]	[illegible]	[illegible]	[illegible]	[illegible]	[illegible]	[illegible]
Length "b"	[illegible]	[illegible]	[illegible]	[illegible]	[illegible]	[illegible]	[illegible]	[illegible]	[illegible]	[illegible]	[illegible]	[illegible]	[illegible]	[illegible]
Length "b1"	[illegible]	[illegible]	[illegible]	[illegible]	[illegible]	[illegible]	[illegible]	[illegible]	[illegible]	[illegible]	[illegible]	[illegible]	[illegible]	[illegible]
"c" Size Bar #	[illegible]	[illegible]	[illegible]	[illegible]	[illegible]	[illegible]	[illegible]	[illegible]	[illegible]	[illegible]	[illegible]	[illegible]	[illegible]	[illegible]
"c" Spacing	[illegible]	[illegible]	[illegible]	[illegible]	[illegible]	[illegible]	[illegible]	[illegible]	[illegible]	[illegible]	[illegible]	[illegible]	[illegible]	[illegible]
"c" Length	[illegible]	[illegible]	[illegible]	[illegible]	[illegible]	[illegible]	[illegible]	[illegible]	[illegible]	[illegible]	[illegible]	[illegible]	[illegible]	[illegible]
"d" Dist Bars Top Slab-Tot No	12	6	6	12	6	6	12	6	6	6	12	6	6	6
"d" Dist Bars Bottom Slab-Tot No	6	6	6	6	6	6	6	6	6	6	6	6	6	6
"e" Bars Size Bar #	[illegible]	[illegible]	[illegible]	[illegible]	[illegible]	[illegible]	[illegible]	[illegible]	[illegible]	[illegible]	[illegible]	[illegible]	[illegible]	[illegible]
"e" Bars Spacing	[illegible]	[illegible]	[illegible]	[illegible]	[illegible]	[illegible]	[illegible]	[illegible]	[illegible]	[illegible]	[illegible]	[illegible]	[illegible]	[illegible]
Spacers Number	23			26			29				32			
Concrete CY per lin ft	0.56	0.64	0.80	0.65	0.75	0.86	0.69	0.80	0.88	0.96	0.74	0.88	0.97	1.04
Reinf Lbs per lin ft	95	100	109	103	104	112	106	108	118	133	109	114	126	148

SPAN	6'													
HEIGHT	3'			4'			5'				[illegible]			
STRENGTH CLASSIFICATION	A	B	C	A	B	C	A	B	C	D	A	B	C	D
MAX FILL OVER TOP	4	20	34	4	20	34	4	19	33	43	4	19	33	43
Conc. Top Slab T_1	7½	8½	10½	7½	8½	10½	7½	8½	10½	12	7½	8½	10½	12
Conc. Bottom Slab T_2	7½	9½	11½	7½	9½	11½	7½	9	11½	12½	7½	9½	11½	12½
Conc. Sidewalls T_3	6	6	6	6	6	6	6	6	6	6	6	6	6	7½
"a" Size Bar #	3	4	4	3	4	4	3	4	4	4	3	4	4	4
"a" Spacing	9½	11	8½	9½	11	8½	9½	11	8½	10½	9½	11	8½	10½
"a" Length	[illegible]	[illegible]	[illegible]	[illegible]	[illegible]	[illegible]	[illegible]	[illegible]	[illegible]	[illegible]	[illegible]	[illegible]	[illegible]	[illegible]
"b" or "b1" Size Bar #	[illegible]	[illegible]	[illegible]	[illegible]	[illegible]	[illegible]	[illegible]	[illegible]	[illegible]	[illegible]	[illegible]	[illegible]	[illegible]	[illegible]
"b" or "b1" Spacing	[illegible]	[illegible]	[illegible]	[illegible]	[illegible]	[illegible]	[illegible]	[illegible]	[illegible]	[illegible]	[illegible]	[illegible]	[illegible]	[illegible]
Length "b"	[illegible]	[illegible]	[illegible]	[illegible]	[illegible]	[illegible]	[illegible]	[illegible]	[illegible]	[illegible]	[illegible]	[illegible]	[illegible]	[illegible]
Length "b1"	[illegible]	[illegible]	[illegible]	[illegible]	[illegible]	[illegible]	[illegible]	[illegible]	[illegible]	[illegible]	[illegible]	[illegible]	[illegible]	[illegible]
"c" Size Bar #	[illegible]	[illegible]	[illegible]	[illegible]	[illegible]	[illegible]	[illegible]	[illegible]	[illegible]	[illegible]	[illegible]	[illegible]	[illegible]	[illegible]
"c" Spacing	[illegible]	[illegible]	[illegible]	[illegible]	[illegible]	[illegible]	[illegible]	[illegible]	[illegible]	[illegible]	[illegible]	[illegible]	[illegible]	[illegible]
"c" Length	[illegible]	[illegible]	[illegible]	[illegible]	[illegible]	[illegible]	[illegible]	[illegible]	[illegible]	[illegible]	[illegible]	[illegible]	[illegible]	[illegible]
"d" Dist Bars Top Slab-Tot No	12	6	6	12	6	6	12	6	6	6	12	6	6	6
"d" Dist Bars Bottom Slab-Tot No	6	6	6	6	6	6	6	6	6	6	6	6	6	6
"e" Bars Size Bar #	[illegible]	[illegible]	[illegible]	[illegible]	[illegible]	[illegible]	[illegible]	[illegible]	[illegible]	[illegible]	[illegible]	[illegible]	[illegible]	[illegible]
"e" Bars Spacing	[illegible]	[illegible]	[illegible]	[illegible]	[illegible]	[illegible]	[illegible]	[illegible]	[illegible]	[illegible]	[illegible]	[illegible]	[illegible]	[illegible]
Spacers Number	30			33			36				36			
Concrete CY per lin ft	0.77	0.90	1.06	0.88	0.96	1.12	0.88	1.01	1.19	1.30	0.93	1.07	1.25	1.47
Reinf Lbs per lin ft	121	119	147	129	124	153	128	131	164	175	129	137	177	201

SPAN	8'																
HEIGHT	4'			5'			6'			7'				8'			
STRENGTH CLASSIFICATION	A	B	C	A	B	C	A	B	C	A	B	C	D	A	B	C	D
MAX FILL OVER TOP	3	14	25	3	14	25	3	14	25	3	14	25	37	3	14	25	37
Conc. Top Slab T_1	8½	9½	12	8½	9½	12	8½	9½	12	8½	9½	12½	14½	8½	9½	12½	14½
Conc. Bottom Slab T_2	7½	10½	12½	7½	10½	12½	7½	10½	12½	7½	10½	13	15	7½	10½	13	15½
Conc. Sidewalls T_3	6	6	6	6	6	6	6	6	6	7	7	7	8	7	7	8	8½
"a" Size Bar #	[illegible]	[illegible]	[illegible]	[illegible]	[illegible]	[illegible]	[illegible]	[illegible]	[illegible]	[illegible]	[illegible]	[illegible]	[illegible]	[illegible]	[illegible]	[illegible]	[illegible]
"a" Spacing	12	9½	10½	12	9½	10	12	9½	10	11½	9½	10	8½	11½	9½	10	8½
"a" Length	[illegible]	[illegible]	[illegible]	[illegible]	[illegible]	[illegible]	[illegible]	[illegible]	[illegible]	[illegible]	[illegible]	[illegible]	[illegible]	[illegible]	[illegible]	[illegible]	[illegible]
"b" or "b1" Size Bar #	[illegible]	[illegible]	[illegible]	[illegible]	[illegible]	[illegible]	[illegible]	[illegible]	[illegible]	[illegible]	[illegible]	[illegible]	[illegible]	[illegible]	[illegible]	[illegible]	[illegible]
"b" or "b1" Spacing	[illegible]	[illegible]	[illegible]	[illegible]	[illegible]	[illegible]	[illegible]	[illegible]	[illegible]	[illegible]	[illegible]	[illegible]	[illegible]	[illegible]	[illegible]	[illegible]	[illegible]
Length "b"	[illegible]	[illegible]	[illegible]	[illegible]	[illegible]	[illegible]	[illegible]	[illegible]	[illegible]	[illegible]	[illegible]	[illegible]	[illegible]	[illegible]	[illegible]	[illegible]	[illegible]
Length "b1"	[illegible]	[illegible]	[illegible]	[illegible]	[illegible]	[illegible]	[illegible]	[illegible]	[illegible]	[illegible]	[illegible]	[illegible]	[illegible]	[illegible]	[illegible]	[illegible]	[illegible]
"c" Size Bar #	[illegible]	[illegible]	[illegible]	[illegible]	[illegible]	[illegible]	[illegible]	[illegible]	[illegible]	[illegible]	[illegible]	[illegible]	[illegible]	[illegible]	[illegible]	[illegible]	[illegible]
"c" Spacing	[illegible]	[illegible]	[illegible]	[illegible]	[illegible]	[illegible]	[illegible]	[illegible]	[illegible]	[illegible]	[illegible]	[illegible]	[illegible]	[illegible]	[illegible]	[illegible]	[illegible]
"c" Length	[illegible]	[illegible]	[illegible]	[illegible]	[illegible]	[illegible]	[illegible]	[illegible]	[illegible]	[illegible]	[illegible]	[illegible]	[illegible]	[illegible]	[illegible]	[illegible]	[illegible]
"d" Dist Bars Top Slab-Tot No	16	6	6	16	6	6	16	6	6	16	6	6	6	16	6	6	6
"d" Dist Bars Bottom Slab-Tot No	6	6	6	6	6	6	6	6	6	6	6	6	6	6	6	6	6
"e" Bars Size Bar #	[illegible]	[illegible]	[illegible]	[illegible]	[illegible]	[illegible]	[illegible]	[illegible]	[illegible]	[illegible]	[illegible]	[illegible]	[illegible]	[illegible]	[illegible]	[illegible]	[illegible]
"e" Bars Spacing	[illegible]	[illegible]	[illegible]	[illegible]	[illegible]	[illegible]	[illegible]	[illegible]	[illegible]	[illegible]	[illegible]	[illegible]	[illegible]	[illegible]	[illegible]	[illegible]	[illegible]
Spacers Number	41			44			44			47			56	50		60	
Concrete CY per lin ft	1.08	1.30	1.55	1.14	1.37	1.61	1.19	1.42	1.66	1.32	1.56	1.83	2.14	1.39	1.62	1.99	2.27
Reinf Lbs per lin ft	169	175	200	172	181	218	173	188	229	185	199	248	299	191	207	284	314

SPAN	10'																
HEIGHT	5'			6'			7'			8'				10'			
STRENGTH CLASSIFICATION	A	B	C	A	B	C	A	B	C	A	B	C	D	A	B	C	D
MAX FILL OVER TOP	2	17	30	2	17	30	2	17	30	2	16	29	36	2	16	29	36
Conc. Top Slab T_1	[illegible]	[illegible]	16	[illegible]	[illegible]	16	[illegible]	[illegible]	16	[illegible]	[illegible]	16	17½	[illegible]	[illegible]	16	17½
Conc. Bottom Slab T_2	[illegible]	[illegible]	[illegible]	[illegible]	[illegible]	[illegible]	[illegible]	[illegible]	[illegible]	[illegible]	[illegible]	[illegible]	[illegible]	[illegible]	[illegible]	[illegible]	[illegible]
Conc. Sidewalls T_3	6	6	6	6	6	6	6	6½	7	7	7	7½	8½	8	8	9	10
"a" Size Bar #	[illegible]	[illegible]	[illegible]	[illegible]	[illegible]	[illegible]	[illegible]	[illegible]	[illegible]	[illegible]	[illegible]	[illegible]	[illegible]	[illegible]	[illegible]	[illegible]	[illegible]
"a" Spacing	11	10	10	11	8½	10	11	8½	10	11	10	10	9	11	10	10	9
"a" Length	[illegible]	[illegible]	[illegible]	[illegible]	[illegible]	[illegible]	[illegible]	[illegible]	[illegible]	[illegible]	[illegible]	[illegible]	[illegible]	[illegible]	[illegible]	[illegible]	[illegible]
"b" or "b1" Size Bar #	[illegible]	[illegible]	[illegible]	[illegible]	[illegible]	[illegible]	[illegible]	[illegible]	[illegible]	[illegible]	[illegible]	[illegible]	[illegible]	[illegible]	[illegible]	[illegible]	[illegible]
"b" or "b1" Spacing	11	10	10	11	8½	10	11	8½	10	11	10	10	9	11	10	10	9
Length "b"	[illegible]	[illegible]	[illegible]	[illegible]	[illegible]	[illegible]	[illegible]	[illegible]	[illegible]	[illegible]	[illegible]	[illegible]	[illegible]	[illegible]	[illegible]	[illegible]	[illegible]
Length "b1"	[illegible]	[illegible]	[illegible]	[illegible]	[illegible]	[illegible]	[illegible]	[illegible]	[illegible]	[illegible]	[illegible]	[illegible]	[illegible]	[illegible]	[illegible]	[illegible]	[illegible]
"c" Size Bar #	[illegible]	[illegible]	[illegible]	[illegible]	[illegible]	[illegible]	[illegible]	[illegible]	[illegible]	[illegible]	[illegible]	[illegible]	[illegible]	[illegible]	[illegible]	[illegible]	[illegible]
"c" Spacing	11	10	10	11	8½	10	11	8½	10	11	10	10	9	11	10	10	9
"c" Length	[illegible]	[illegible]	[illegible]	[illegible]	[illegible]	[illegible]	[illegible]	[illegible]	[illegible]	[illegible]	[illegible]	[illegible]	[illegible]	[illegible]	[illegible]	[illegible]	[illegible]
"d" Dist Bars Top Slab-Tot No	18	10	10	18	10	10	18	10	10	18	10	10	10	18	10	10	10
"d" Dist Bars Bottom Slab-Tot No	10	10	10	10	10	10	10	10	10	10	10	10	10	10	10	10	10
"e" Bars Size Bar #	[illegible]	[illegible]	[illegible]	[illegible]	[illegible]	[illegible]	[illegible]	[illegible]	[illegible]	[illegible]	[illegible]	[illegible]	[illegible]	[illegible]	[illegible]	[illegible]	[illegible]
"e" Bars Spacing	18	10	10	18	6	6½	14	6	6	11	6½	6	6	7½	7	5½	5
Spacers Number	48			48			51			58				64	68		
Concrete CY per lin ft	1.40	2.05	2.46	1.45	2.07	2.46	1.31	2.10	2.64	1.68	2.27	2.74	3.04	1.82	2.51	3.05	3.41
Reinf Lbs per lin ft	236	254	310	236	274	324	243	280	339	252	278	355	430	279	327	400	476

SPAN	12'																				
HEIGHT	6'			7'			8'			9'				10'				12'			
STRENGTH CLASSIFICATION	A	B	C	A	B	C	A	B	C	A	B	C	D	A	B	C	D	A	B	C	D
MAX FILL OVER TOP	2	14	26	2	14	26	2	14	26	2	14	26	36	2	14	26	36	2	14	26	36
Conc. Top Slab T_1	10	14	17½	10	[illegible]	17½	10½	[illegible]	17½	10½	[illegible]	17½	20½	10½	[illegible]	17½	20½	10½	[illegible]	[illegible]	21½
Conc. Bottom Slab T_2	9½	[illegible]	[illegible]	9½	12	[illegible]	9½	12	[illegible]	10	[illegible]	[illegible]	[illegible]	[illegible]	[illegible]	[illegible]	[illegible]	10½	[illegible]	[illegible]	22
Conc. Sidewalls T_3	6	6	6½	7	7	7	8	8	8½	9	9	9	10	9	9	9½	11	9	10	11	12
"a" Size Bar #	[illegible]	[illegible]	[illegible]	[illegible]	[illegible]	[illegible]	[illegible]	[illegible]	[illegible]	[illegible]	[illegible]	[illegible]	[illegible]	[illegible]	[illegible]	[illegible]	[illegible]	[illegible]	[illegible]	[illegible]	[illegible]
"a" Spacing	9	11½	9	9	11½	9	9	11	8½	9	11	8½	9	9	11	8½	9	9	11	8½	9
"a" Length	[illegible]	[illegible]	[illegible]	[illegible]	[illegible]	[illegible]	[illegible]	[illegible]	[illegible]	[illegible]	[illegible]	[illegible]	[illegible]	[illegible]	[illegible]	[illegible]	[illegible]	[illegible]	[illegible]	[illegible]	[illegible]
"b" or "b1" Size Bar #	[illegible]	[illegible]	[illegible]	[illegible]	[illegible]	[illegible]	[illegible]	[illegible]	[illegible]	[illegible]	[illegible]	[illegible]	[illegible]	[illegible]	[illegible]	[illegible]	[illegible]	[illegible]	[illegible]	[illegible]	[illegible]
"b" or "b1" Spacing	[illegible]	[illegible]	[illegible]	[illegible]	[illegible]	[illegible]	[illegible]	[illegible]	[illegible]	[illegible]	[illegible]	[illegible]	[illegible]	[illegible]	[illegible]	[illegible]	[illegible]	[illegible]	[illegible]	[illegible]	[illegible]
Length "b"	[illegible]	[illegible]	[illegible]	[illegible]	[illegible]	[illegible]	[illegible]	[illegible]	[illegible]	[illegible]	[illegible]	[illegible]	[illegible]	[illegible]	[illegible]	[illegible]	[illegible]	[illegible]	[illegible]	[illegible]	[illegible]
Length "b1"	[illegible]	[illegible]	[illegible]	[illegible]	[illegible]	[illegible]	[illegible]	[illegible]	[illegible]	[illegible]	[illegible]	[illegible]	[illegible]	[illegible]	[illegible]	[illegible]	[illegible]	[illegible]	[illegible]	[illegible]	[illegible]
"c" Size Bar #	[illegible]	[illegible]	[illegible]	[illegible]	[illegible]	[illegible]	[illegible]	[illegible]	[illegible]	[illegible]	[illegible]	[illegible]	[illegible]	[illegible]	[illegible]	[illegible]	[illegible]	[illegible]	[illegible]	[illegible]	[illegible]
"c" Spacing	[illegible]	[illegible]	[illegible]	[illegible]	[illegible]	[illegible]	[illegible]	[illegible]	[illegible]	[illegible]	[illegible]	[illegible]	[illegible]	[illegible]	[illegible]	[illegible]	[illegible]	[illegible]	[illegible]	[illegible]	[illegible]
"c" Length	[illegible]	[illegible]	[illegible]	[illegible]	[illegible]	[illegible]	[illegible]	[illegible]	[illegible]	[illegible]	[illegible]	[illegible]	[illegible]	[illegible]	[illegible]	[illegible]	[illegible]	[illegible]	[illegible]	[illegible]	[illegible]
"d" Dist Bars Top Slab-Tot No	24	10	10	24	10	10	24	10	10	24	10	10	10	24	10	10	10	24	10	10	10
"d" Dist Bars Bottom Slab-Tot No	10	10	10	10	10	10	10	10	10	10	10	10	10	10	10	10	10	10	10	10	10
"e" Bars Size Bar #	[illegible]	[illegible]	[illegible]	[illegible]	[illegible]	[illegible]	[illegible]	[illegible]	[illegible]	[illegible]	[illegible]	[illegible]	[illegible]	[illegible]	[illegible]	[illegible]	[illegible]	[illegible]	[illegible]	[illegible]	[illegible]
"e" Bars Spacing	18	9	9	15	6	6½	12	5½	6	9	7½	6½	6	6½	11	6½	5	12	8	7	7
Spacers Number	62			62			68			68				72				78			
Concrete CY per lin ft	1.84	2.39	3.16	1.97	2.77	[illegible]	[illegible]	[illegible]	[illegible]	[illegible]	[illegible]	[illegible]	[illegible]	[illegible]	[illegible]	[illegible]	[illegible]	[illegible]	[illegible]	[illegible]	[illegible]
Reinf Lbs per lin ft	305	317	401	316	330	413	336	365	440	345	374	485	578	351	394	519	562	371	427	561	[illegible]

Note:
For boxes of height less than that shown in table, use next greater table height slabs, wall dimensions and reinforcing steel, and make necessary changes in bar lengths, number of spacers and quantities. Number of "d" bars in table is slab total for both cells.

⊕ For reinforcement clearance, except at bottom, see "Miscellaneous Details"

For exposed top, extend "c" bars full length, top slab only, provide additional #4 spacers @18± and adjust quantities.

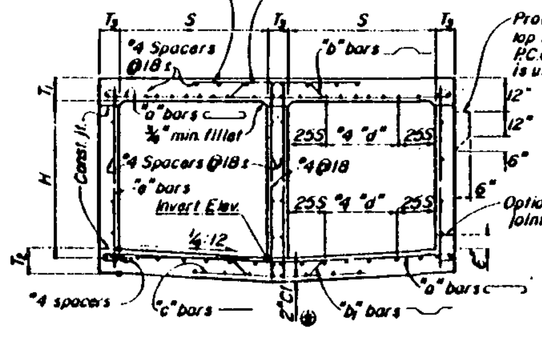

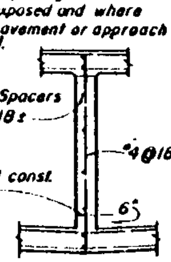

Reinforcement for interior walls under 8"

TYPICAL SECTION

(Showing reinforcement for interior walls 8" and over)

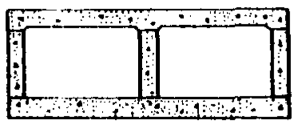

"FLAT INVERT" ALTERNATIVE

(When shown)

SAN DIEGO REGIONAL STANDARD DRAWING

DOUBLE BOX CULVERT

RECOMMENDED BY THE SAN DIEGO REGIONAL STANDARDS COMMITTEE

[signature] Dec. 1975
Coordinator R.C.E. 19807 Date

DRAWING NUMBER **D-77**

SPAN	4'									5'										6'										8'									
HEIGHT	2'			3'			4'			2'			3'			4'			5'	3'			4'			5'			6'	4'			5'			6'			7'			8'
STRENGTH CLASSIFICATION	A	B	C	A	B	C	A	B	C	A	B	C	A	B	C	A	B	C	D	A	B	C	A	B	C	A	B	C	D	A	B	C	A	B	C	A	B	C	D	A	B	C	D
MAX FILL OVER TOP	10	24	50	10	24	50	10	24	50	8	17	26	8	17	26	8	17	26	35	8	17	26	8	17	26	8	17	26	35	8	13	23	8	13	23	8	13	23	30	8	13	23	30
Concrete: Top Slab T_1	6½	6½	7½	6½	6½	7½	6½	6½	7½	6½	6½	7½	6½	6½	7½	6½	6½	7½	8½	6½	6½	7½	6½	6½	7½	6½	6½	7½	8½	7½	7½	8½	7½	7½	8½	7½	7½	8½	9½	7½	7½	8½	9½
Bottom Slab T_2	6	6	6½	6	7	6½	6	7	6½	6	7	6½	6	7	6½	6	7	6½	7½	6	7	6½	6	7	6½	6	7	6½	7½	6	7	6½	6	7	6½	6	7	6½	7½	6	7	6½	7½
Sidewalls T_3	6	6	6	6	6	6	6	6	6	6	6	6	6	6	6	6	6	6	6	6	6	6	6	6	6	6	6	6	6	6	6	6	6	6	6	6	6	6	6	6	6	6	6
Steel: "a" Size Bar #	3	3	3	3	3	3	3	3	3	3	3	3	3	3	3	3	3	3	3	3	3	3	3	3	3	3	3	3	3	3	3	3	3	3	3	3	3	3	3	3	3	3	3
Spacing	11	11½	13	11	11½	13	11	11½	13	10	11½	13	10	11½	13	10	11	13	11½	10	11	13	10	11½	13	10	11	13	11½	10	11½	13	10	11½	13	10	11½	13	10½	10	11½	13	10½
Length	14' 0"	14' 0"	14' 0"	14' 0"	14' 0"	14' 0"	14' 0"	14' 0"	14' 0"	17' 0"	17' 0"	17' 0"	17' 0"	17' 0"	17' 0"	17' 0"	17' 0"	17' 0"	17' 0"	20' 0"	20' 0"	20' 0"	20' 0"	20' 0"	20' 0"	20' 0"	20' 0"	20' 0"	20' 0"	26' 0"	26' 0"	26' 0"	26' 0"	26' 0"	26' 0"	26' 0"	26' 0"	26' 0"	26' 0"	27' 0"	27' 0"	27' 0"	27' 0"
"b" Size Bar #	3	3	6	3	3	6	3	3	6	3	3	6	3	3	6	3	3	6	6	3	3	6	3	3	6	3	3	6	6	6	6	6	6	6	6	6	6	6	6	6	6	7	7
Spacing	11	11½	13	11	11½	13	11	11½	13	10	11½	13	10	11½	13	10	11	13	11½	10	11	13	10	11½	13	10	11	13	11½	10	11½	13	10	11½	13	10	11½	13	10½	10	11½	13	10½
Length "a"	14' 0"	14' 0"	14' 0"	14' 0"	14' 0"	14' 0"	14' 0"	14' 0"	14' 0"	17' 0"	17' 0"	17' 0"	17' 0"	17' 0"	17' 0"	17' 0"	17' 0"	17' 0"	17' 0"	20' 0"	20' 0"	20' 0"	20' 0"	20' 0"	20' 0"	20' 0"	20' 0"	20' 0"	20' 0"	26' 0"	26' 0"	26' 0"	26' 0"	26' 0"	26' 0"	26' 0"	26' 0"	26' 0"	26' 0"	27' 0"	27' 0"	27' 0"	27' 0"
Length "b"	14' 0"	14' 0"	14' 0"	14' 0"	14' 0"	14' 0"	14' 0"	14' 0"	14' 0"	17' 0"	17' 0"	17' 0"	17' 0"	17' 0"	17' 0"	17' 0"	17' 0"	17' 0"	17' 0"	20' 0"	20' 0"	20' 0"	20' 0"	20' 0"	20' 0"	20' 0"	20' 0"	20' 0"	20' 0"	26' 0"	26' 0"	26' 0"	26' 0"	26' 0"	26' 0"	26' 0"	26' 0"	26' 0"	26' 0"	27' 0"	27' 0"	27' 0"	27' 0"
Steel: "c" Size Bar #	3	3	6	3	3	6	3	3	6	3	3	6	3	3	6	3	3	6	6	3	3	6	3	3	6	3	3	6	6	6	6	6	6	6	6	6	6	6	6	6	6	7	7
Spacing	11	11½	13	11	11½	13	11	11½	13	10	11½	13	10	11½	13	10	11	13	11½	10	11	13	10	11½	13	10	11	13	11½	10	11½	13	10	11½	13	10	11½	13	10½	10	11½	13	10½
Length	9' 0"	9' 0"	9' 0"	9' 0"	9' 0"	9' 0"	9' 0"	9' 0"	9' 0"	11' 0"	11' 0"	11' 0"	11' 0"	11' 0"	11' 0"	11' 0"	11' 0"	11' 0"	11' 0"	13' 0"	13' 0"	13' 0"	13' 0"	13' 0"	13' 0"	13' 0"	13' 0"	13' 0"	13' 0"	17' 0"	17' 0"	17' 0"	17' 0"	17' 0"	17' 0"	17' 0"	17' 0"	17' 0"	17' 0"	17' 0"	17' 0"	17' 0"	17' 0"
"d" Dist. Bars: Top Slab-Tot. No.	18	8	8	18	8	8	18	8	8	18	8	8	18	8	8	18	8	8	8	18	8	8	18	8	8	18	8	8	8	18	8	8	18	8	8	18	8	8	8	18	8	8	8
Bottom Slab-Tot. No.	8	8	8	8	8	8	8	8	8	8	8	8	8	8	8	8	8	8	8	8	8	8	8	8	8	8	8	8	8	8	8	8	8	8	8	8	8	8	8	8	8	8	8
"e" Size Bar #	4	4	4	4	4	4	4	4	4	4	4	4	4	4	4	4	4	4	4	4	4	4	4	4	4	4	4	4	4	4	4	4	4	4	4	4	4	4	4	4	4	4	4
Bars: Spacing	18	18	18	18	18	18	18	18	18	18	18	18	18	18	18	18	18	18	18	18	18	18	18	18	18	18	18	18	18	18	18	18	18	18	18	18	18	18	18	18	18	18	18
Spacers: Number	34			34			34			34			34			34			34	40			40			40			40	48			48			48			48		58			58
Concrete: C.Y. per lin. ft.	.06	.07	.08	.07	.07	.08	.08	.08	.09	.08	.08	.09	.08	.08	.09	.08	.09	.09	.10	.09	.09	.10	.09	.09	.10	.09	.09	.10	.11	.10	.10	.11	.10	.10	.11	.10	.10	.11	.12	.10	.10	.11	.12
Reinf. Lbs. per lin. ft.	122	110	135	127	113	136	131	122	147	128	116	143	133	120	147	137	126	151	161	141	129	157	146	134	161	151	139	167	182	166	154	184	172	160	191	178	166	198	217	184	172	205	224

SPAN	10'												12'																	
HEIGHT	5'			6'			7'			8'			10'			6'			7'			8'			9'			10'			12'		
STRENGTH CLASSIFICATION	A	B	C	A	B	C	A	B	C	A	B	C	A	B	C	A	B	C	A	B	C	A	B	C	A	B	C	A	B	C	A	B	C
MAX FILL OVER TOP	8	11	20	8	11	20	8	11	20	8	11	20	8	11	20	8	10	18	8	10	18	8	10	18	8	11	20	8	11	20	8	11	20
Concrete: Top Slab T_1	9	10	18	9	10	18	9	10	18	9	10	18	9	10½	14	10½	11½	14	10½	11½	14	10½	11½	14	10½	12	14	10½	12	14	10½	12	14
Bottom Slab T_2	7½	10½	13	7½	10½	13	7½	10½	13	7½	11	13	8	11	13½	8	12	14½	8	12	14½	8	12	14½	8	12	14½	8	12	14½	8	12	14½
Sidewalls T_3	6	6	6	6	6	6	6	6	6	6	6	6	6	6	6	6	6	6	6	6	6	6	6	6	6	6	6	6	6	6	6	6	6
Steel: "a" Size Bar #	6	6	6	6	6	6	6	6	6	6	6	6	7	6	6	6	7	7	7	7	7	7	7	7	7	7	7	7	7	7	7	7	7
Spacing	10½	13	10	10½	13	10	10½	13	10	10	10½	13	10	10	11	10½	11	13	10	11	13	10	11	13	10	11	13	10	11	13	10½	11	13
Length	32' 0"	32' 0"	32' 0"	32' 0"	32' 0"	32' 0"	32' 0"	32' 0"	32' 0"	33' 0"	33' 0"	33' 0"	33' 0"	33' 0"	33' 0"	34' 0"	34' 0"	34' 0"	34' 0"	34' 0"	34' 0"	35' 0"	35' 0"	35' 0"	35' 0"	35' 0"	35' 0"	35' 0"	35' 0"	35' 0"	35' 0"	35' 0"	35' 0"
"b" Size Bar #	6	7	7	6	7	7	6	7	7	6	7	7	7	7	8	7	7	8	7	7	8	7	7	8	7	7	8	7	7	8	7	7	8
Spacing	10½	13	10	10½	13	10	10½	13	10	10	10½	13	10	11	10½	13	10	11	12	11	12	11	11½	12	11	11½	12	10½	11	11½	10½	11	11½
Length "a"	32' 0"	32' 0"	32' 0"	32' 0"	32' 0"	32' 0"	32' 0"	32' 0"	32' 0"	33' 0"	33' 0"	33' 0"	33' 0"	33' 0"	33' 0"	34' 0"	34' 0"	34' 0"	34' 0"	34' 0"	34' 0"	35' 0"	35' 0"	35' 0"	35' 0"	35' 0"	35' 0"	35' 0"	35' 0"	35' 0"	35' 0"	35' 0"	35' 0"
Length "b"	32' 0"	32' 0"	32' 0"	32' 0"	32' 0"	32' 0"	32' 0"	32' 0"	32' 0"	33' 0"	33' 0"	33' 0"	33' 0"	33' 0"	33' 0"	34' 0"	34' 0"	34' 0"	34' 0"	34' 0"	34' 0"	35' 0"	35' 0"	35' 0"	35' 0"	35' 0"	35' 0"	35' 0"	35' 0"	35' 0"	35' 0"	35' 0"	35' 0"
Steel: "c" Size Bar #	5	7	7	5	7	7	5	7	7	5	7	7	6	5	7	6	6	8	6	6	8	6	6	8	6	6	8	6	6	8	6	6	8
Spacing	10½	13	10	10½	13	10	10½	13	10	10	10½	13	10	11	10½	13	10	11	12	11	12	11	11½	12	11	11½	12	10½	11	11½	10½	11	11½
Length	21' 0"	21' 0"	21' 0"	21' 0"	21' 0"	21' 0"	21' 0"	21' 0"	21' 0"	21' 0"	21' 0"	21' 0"	21' 0"	21' 0"	21' 0"	23' 0"	23' 0"	23' 0"	23' 0"	23' 0"	23' 0"	23' 0"	23' 0"	23' 0"	23' 0"	23' 0"	23' 0"	23' 0"	23' 0"	23' 0"	23' 0"	23' 0"	23' 0"
"d" Dist. Bars: Top Slab-Tot. No.	87	13	13	87	13	13	87	13	13	87	13	13	12	87	13	13	13	96	13	13	96	13	13	96	13	13	96	13	13	96	13	13	13
Bottom Slab-Tot. No.	13	13	13	13	13	13	13	13	13	13	13	13	13	13	13	13	13	13	13	13	13	13	13	13	13	13	13	13	13	13	13	13	13
"e" Size Bar #	4	4	5	4	5	6	4	6	7	4	6	7	6	5	6	6	6	7	4	6	7	4	6	7	4	6	7	6	6	7	6	6	7
Bars: Spacing	18	13	10	18	13	10	13	13	10	10½	12	10	11	10½	9	10	7	11½	12	3 3/4	9	10	10½	11	11	11½	12	10½	11	8 1/4	12	11	9
Spacers: Number	68			68			78			84			102			76			82			94			104			110			116		
Concrete: C.Y. per lin. ft.	.16	.20	.22	.20	.20	.22	.20	.23	.25	.23	.24	.27	.27	.25	.28	.26	.31	.36	.27	.35	.38	.29	.38	.43	.31	.43	.48	.33	.43	.48	.37	.46	.51
Reinf. Lbs. per lin. ft.	328	272	370	328	278	388	367	301	422	397	322	450	477	377	492	514	390	521	477	332	450	488	353	477	503	377	503	516	396	528	542	416	554

Note:
For boxes of height less than that shown in table, use next greater table height slabs, wall dimensions and reinforcing steel, and make necessary changes in bar lengths, number of spacers and quantities. Number of "d" bars in table is slab total for all three cells.

For reinforcement clearance, except at bottom, see "Miscellaneous Details."

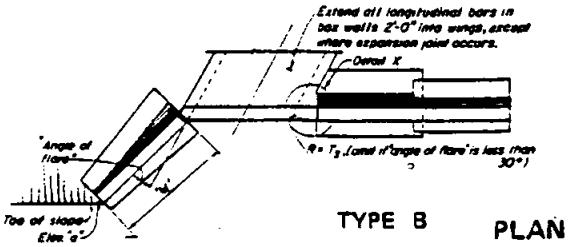

TYPE A

TYPE B

PLAN

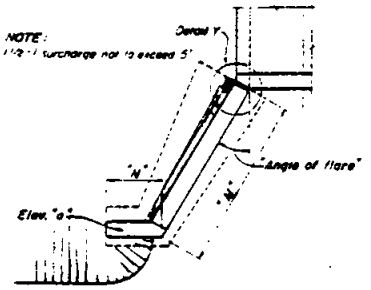

TYPE C

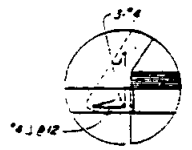

DETAIL X

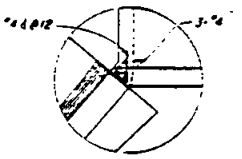

DETAIL Y

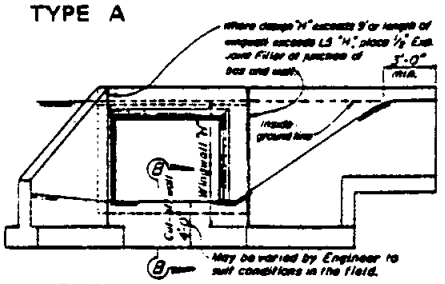

TYPE A · TYPE B

END ELEVATION
STRAIGHT WINGWALLS

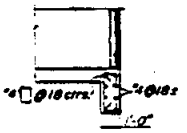

SECTION B–B

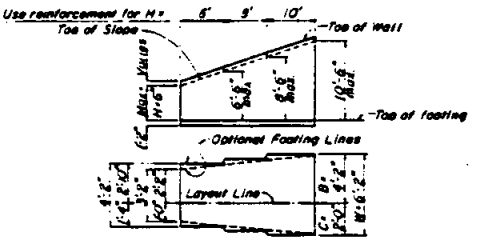

TYPICAL LAYOUT EXAMPLE

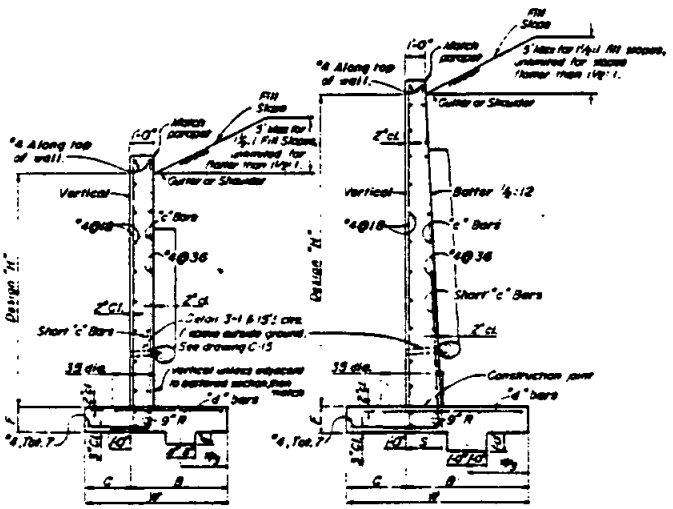

TYPICAL SECTION
H = 4' thru 12'

TYPICAL SECTION
H = 13' thru 16'

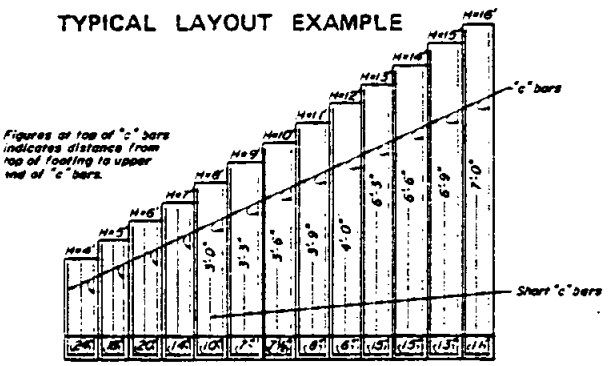

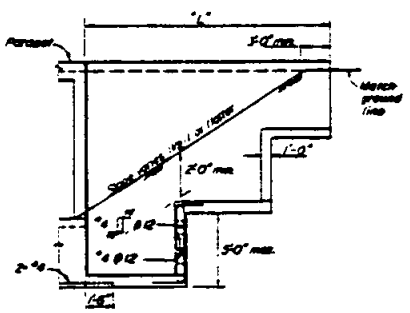

ELEVATION

REINFORCED CONCRETE WINGWALLS														
"H"	4'	5'	6'	7'	8'	9'	10'	11'	12'	13'	14'	15'	16'
"L"	3'-2"	3'-8"	4'-2"	4'-8"	5'-2"	5'-8"	6'-2"	6'-8"	7'-2"	7'-8"	8'-2"	8'-8"	9'-2"
C	1'-0"	1'-2"	1'-4"	1'-6"	1'-8"	1'-10"	2'-0"	2'-2"	2'-4"	2'-6"	2'-8"	2'-10"	3'-0"
B	2'-2"	2'-6"	2'-10"	3'-2"	3'-6"	3'-10"	4'-2"	4'-6"	4'-10"	5'-2"	5'-6"	5'-10"	6'-2"
F	1'-2"												
Batter	None											¼:12	
S	1'-0"	1'-0"	1'-0"	1'-0"	1'-0"	1'-0"	1'-0"	1'-0"	1'-0"	1'-6½"	1'-7"	1'-7½"	1'-8"
"c" Bars	#4 @ 24	#4 @ 18	#4 @ 20	#4 @ 14	#4 @ 10	#4 @ 7	#4 @ 7	#4 @ 7	#4 @ 7	#4 @ 8	#4 @ 8	#4 @ 8	#4 @ 8
"s" Bars	#4 @ 24	#4 @ 18	#4 @ 20	#4 @ 14	#4 @ 10	#4 @ 8	#4 @ 7	#4 @ 6	#4 @ 7	#4 @ 6	#4 @ 5	#4 @ 5	#4 @ 5
Conc. (C.Y.)	0.32	0.38	0.44	0.49	0.55	0.61	0.67	0.73	0.79	1.02	1.10	1.18	1.26
Reinf. Steel (Lb.)	13	16	19	25	30	37	49	62	76	73	90	104	125

Quantities do not include that portion above the design "H" limit.

NOTES

Unit Stresses: $f_s = 20{,}000$ p.s.i., $f_c = 1200$ p.s.i., $n = 10$

Maximum Toe Pressure = 1½ Tons/sq. ft.

Elevations, length and angle of flare of wings may be varied by the Engineer to suit conditions encountered in the field. Walls designed for 2' liveload surcharge, 1½:1 sloping surcharge not to exceed 5' in elevation plus 2' liveload surcharge, or unlimited 2:1 surcharge.

Dimensions "H", "L", "M", "N", Elev. "a" and "Angle of flare" (as apply) are shown on the plans.

Revision	By	Approved	Date

SAN DIEGO REGIONAL STANDARD DRAWING

BOX CULVERT WINGWALL
TYPES A, B & C

RECOMMENDED BY THE SAN DIEGO REGIONAL STANDARDS COMMITTEE

Coordinator R.C.E. 19807 Dec. 1975 Date

DRAWING NUMBER D-79

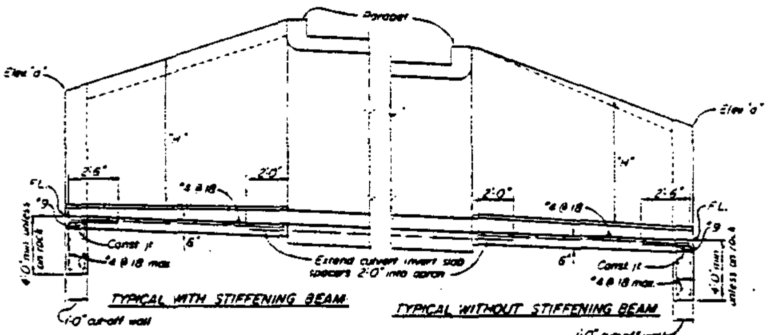

PART LONGITUDINAL SECTION

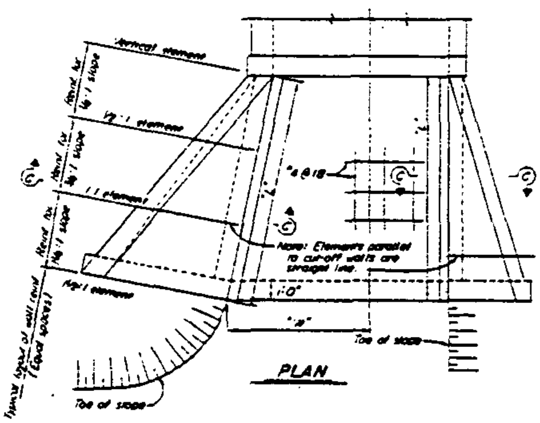

PLAN

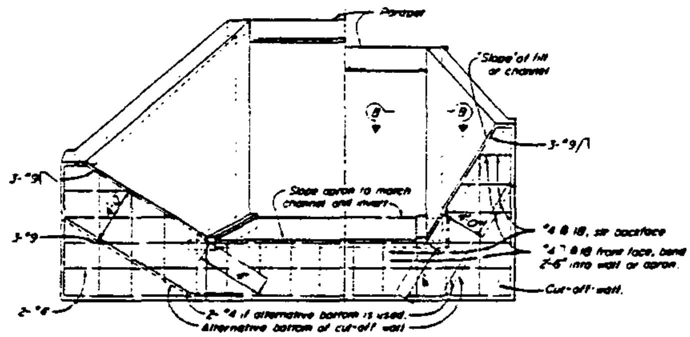

END ELEVATION

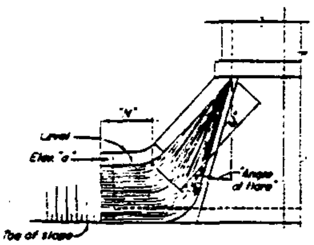

ALTERNATIVE WARPED WINGWALL

Use where additional protection to toe of embankment is required.

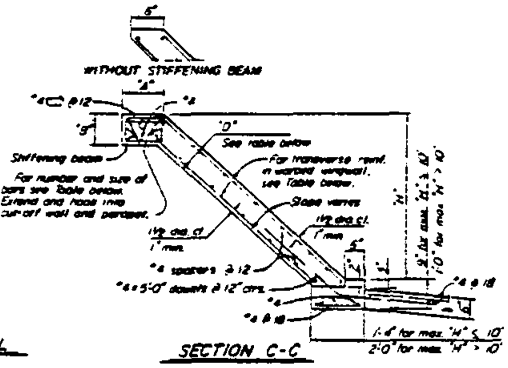

SECTION C-C

WARPED WINGWALLS								
WALL DIMENSIONS AND REINFORCING								
Element Slope	"H"	8' or less	10'	12'	14'	16'	18'	20'
1/4 : 1	Front face reinf.	#4 @ 12	#4 @ 7	#5 @ 7	#5 @ 5	#5 @ 6	#7 @ 7	#7 @ 6
	Rear face reinf.	#4 @ 12	#4 @ 12	#4 @ 12	#4 @ 12	#4 @ 12	#4 @ 12	#4 @ 12
3/4 : 1	Front face reinf.	#4 @ 12	#4 @ 12	#4 @ 12	#4 @ 12	#4 @ 10	#4 @ 8	#4 @ 6
	Rear face reinf.	#4 @ 12	#4 @ 12	#4 @ 12	#4 @ 10	#4 @ 7	#4 @ 6	#5 @ 8
1 1/4 : 1	Front face reinf.	#4 @ 12	#4 @ 12	#4 @ 12	#4 @ 12	#4 @ 12	#4 @ 12	#4 @ 12
	Rear face reinf.	#4 @ 8	#4 @ 8	#4 @ 5	#5 @ 6	#6 @ 7	#6 @ 6	#7 @ 6
"D" at Cut-off Wall		6"	5"	5"	7 1/2"	8"	9 1/2"	11"
"D" at Culvert		5"	6"	6"	9"	9 1/2"	11"	1'-1"

STIFFENING BEAM DIMENSIONS AND REINFORCING									
"H" / "L"	12'	14'	16'	18'	20'	25'	30'	35'	40' or more
6'	No beam. Place 2-#8 in each								
8'	face along top of								
10'	wall		"A" = 1'-0"						
12'			"B" = 9"			"A" = 1'-6"			
14'		Tot. 6-#6				"B" = 1'-0"		"A" = 1'-10"	
16'					Tot. 6-#7		"B" = 1'-0"		"A" = 2'-0"
18'						Tot. 6-#8			"B" = 1'-6"
20'								Tot. 8-#9	

Notes: Walls designed for 2' surcharge; earth load = 120 #/cu. ft.; equivalent fluid pressure = 36 #/cu. ft.
Vary "D" of warped wall uniformly from that at cut-off wall to that at culvert, for max. "H" > 12'.
Where corrosion is anticipated increase apron thickness, to 7" min. to provide 2" min. reinforcement coverage.
Dimensions "L", "B", "H", "M", "N", Elev. "a", "Angle of flare", and end "Slope" (as apply) are shown on the plans.
Concrete shall be class 560-C-3250

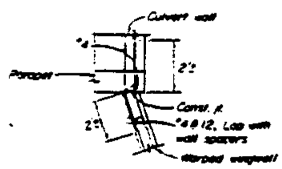

SECTION B-B

RECOMMENDED BY THE SAN DIEGO REGIONAL STANDARDS COMMITTEE

[signature] Dec. 1975
Coordinator R.C.E. 19607 Date

SAN DIEGO REGIONAL STANDARD DRAWING

BOX CULVERT WARPED WINGWALLS

Revision	By	Approved	Date
Concrete	TRP	M.B.	10-82

DRAWING NUMBER D-80.1

DESIGN NOTES

SPECIFICATIONS:

DESIGN: A A S H O DATED 1973 WITH REVISIONS AND AS SUPPLEMENTED BY STATE OF CALIFORNIA BRIDGE PLANNING AND DESIGN MANUAL

SECTIONS DESIGNED FOR CULVERT IN A TRENCH ON HARD FOUNDATION, OR CULVERT UNTRENCHED ON YIELDING FOUNDATION. FOR CULVERTS ON PILES OR ROCK FOUNDATIONS, SPECIAL DESIGN WILL BE REQUIRED

LOADING:

LIVE LOAD: FOR LEGAL HIGHWAY LOADS, USE HS20-44 OR ALTERNATIVE, WITH 30% IMPACT FOR ALL COVER DEPTHS NO IMPACT ON INVERT

COVER LESS THAN 2' - WHEEL LOAD DISTRIBUTION ON THE TOP SLAB IS E=0.175S+3.2' LONGITUDINALLY AND CONCENTRATED ALONG THE SPAN. WHEEL LOAD DISTRIBUTION ON THE INVERT SLAB IS 7.5' LONGITUDINALLY AND UNIFORMLY OVER THE BREADTH OF THE CULVERT

COVER 2' OR MORE - WHEEL LOADS DISTRIBUTED UNIFORMLY OVER A SQUARE, THE SIDES OF WHICH ARE 1.75 TIMES THE DEPTH OF COVER, BUT NOT LESS LONGITUDINALLY THAN E ON THE TOP SLAB, OR 7.5' ON THE INVERT SLAB. WHEN SUCH AREAS FROM SEVERAL WHEEL CONCENTRATIONS OVERLAP, THE TOTAL LOAD SHALL BE CONSIDERED AS UNIFORMLY DISTRIBUTED OVER THE AREA DEFINED BY THE OUTSIDE LIMITS OF THE INDIVIDUAL AREAS, BUT THE OVERALL LONGITUDINAL DIMENSION SHALL NOT EXCEED THE TOTAL LENGTH OF THE SUPPORTING SLAB. NEGLECT LIVE LOAD ON SINGLE SPANS WHEN COVER IS MORE THAN 8' AND EXCEEDS SPAN, AND ON MULTIPLE SPANS WHEN COVER EXCEEDS DISTANCE BETWEEN EXTERIOR WALLS.

DEATH LOAD: EARTH LOAD OF 120 PCF AND AN EQUIVALENT FLUID PRESSURE OF 36 PCF, RESULT TO TO 64 PCF AND 25 PCF RESPECTIVELY FOR CLEAR SPAN OF 20' OR LESS.

UNIT STRESSES: f_s = 20,000 PSI, n=10

f_c = 1,200 PSI

REINFORCEMENT EMBEDMENT IS 1½ DIA CLEAR, MIN 1" AND IN ½" INCREMENTS, EXCEPT AS NOTED

DISTRIBUTION "d" BARS EXPRESSED AS A % OF MAIN POSITIVE REINFORCEMENT

CLASSIFICATION "A": TOP SLAB = $\frac{60}{\sqrt{\text{Span}}}$, MAX 50% (UNLESS TRAFFIC LONGITUDINAL)

BOTTOM SLAB = #4 @ 18" MAX

CLASSIFICATION "B" TO "E": TOP AND BOTTOM SLABS #4 @ 18" MAX.

GENERAL NOTES

QUANTITIES: QUANTITIES ARE FOR THE SLOPED INVERT SLAB AND DO NOT INCLUDE SPLICES IN LONGITUDINAL BARS, NOR TEMPERATURE REINFORCEMENT FOR EXPOSED TOP CULVERT, NOR CONCRETE OR REINFORCEMENT FOR PARAPETS OR CUTOFF WALLS.

SPECIAL COVERAGE: BOX STANDARD PLANS ARE NOT TO BE USED FOR CULVERTS IN A CORROSIVE ENVIRONMENT OR WHERE THERE IS A SEVERE ABRASIVE FLOW CONDITION.

DESIGNATION: SHOWN ON PLANS AS SPAN x HEIGHT - STRENGTH CLASSIFICATION - LENGTH THUS 4 x 4 - A x 40', FOLLOWED BY ALTERNATIVES

ALTERNATIVES: INVERT WILL BE SLOPED UNLESS "TRAPEZOIDAL INVERT", "FLAT INVERT" OR "V INVERT" IS INCLUDED IN DESIGNATION. ENDS OF CULVERT WILL BE ROUNDED UNLESS "SQUARE ENDS" ARE DESIGNATED. PARAPETS WILL BE AS SHOWN UNLESS "— FT. PARAPET" IS DESIGNATED IN PLANS. SUCH DESIGNATIONS MAY BE DIFFERENT FOR INLET AND OUTLET ENDS.

REINF PLACEMENT: MAIN REINFORCEMENT IS POSITIONED TRANSVERSE OR, FOR CURVED CULVERTS, RADIAL. WHEN RADIAL, REINFORCING SPACING IS MEASURED ALONG THE ℄

CONSTRUCTION NOTES

CONCRETE: BOTTOM SLAB & WALLS SHALL BE CLASS 560-B-3250
TOP SLAB SHALL BE CLASS 560-C-3250

EXPANSION JOINTS: BOTTOM SLAB - NO EXPANSION JOINTS SHALL BE PLACED. TOP SLAB AND WALLS - WHEN COVER IS LESS THAN SPAN LENGTH, PLACE ½" EXPANSION JOINT FILLER AT 30'± CENTERS OUTSIDE THE PAVED ROADWAY LANES AND PLACE BRIDGE DETAIL 3-2 AT 30'± CENTERS UNDER PAVED ROADWAY LANES. WHEN COVER IS MORE THAN SPAN LENGTH, PLACE ½" EXPANSION JOINT FILLER AT 30'± CENTERS AND ADDITIONAL ½" EXPANSION JOINTS AT LOCATIONS OF CHANGE IN FOUNDATION CHARACTER, AS DIRECTED BY THE ENGINEER.

CONSTRUCTION LOADS:
NOT PERMITTED UNTIL CONCRETE HAS REACHED A STRENGTH OF 3,000 PSI OR AGE OF 28 DAYS, WHICHEVER OCCURS FIRST, AND FALSEWORK PLANS HAVE BEEN SUBMITTED BY THE CONTRACTOR TO THE ENGINEER AND APPROVED

CONSTRUCTION JOINTS:
TEMPORARY JOINTS MAY BE PERMITTED IF NORMAL (OR RADIAL) TO ℄ OF RCB. OTHERWISE, THE CONTRACTOR IS TO SUBMIT A PROPOSAL FOR CONSIDERATION.

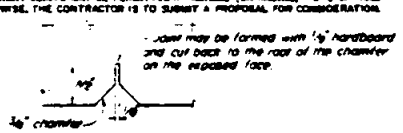

BRIDGE DETAIL 3-2
(Portion)

See Standard Drawing C-15

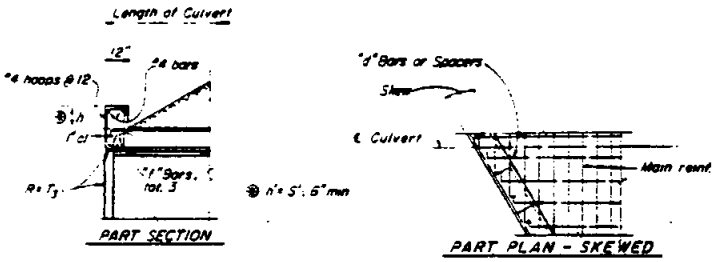

PARAPET DETAILS FOR SINGLE SPAN CULVERTS

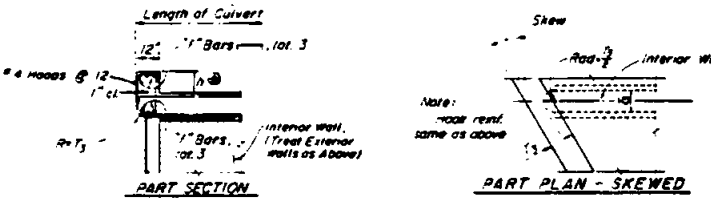

PARAPET DETAILS FOR MULTIPLE SPAN CULVERTS

PARAPET "f" BAR NOS.			
SKEW ANGLE / SPAN	0° TO 15°	16° TO 30°	31° TO 45°
4'	#4	#4	#4
6'	#4	#4	#5
8'	#4	#5	#6
10'	#5	#6	#7
12'	#6	#7	#9
14'	#7	#8	#9

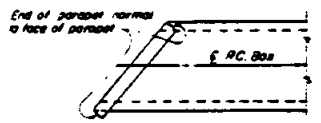

PARAPET DETAIL FOR SKEWED CULVERTS W/O WINGWALLS

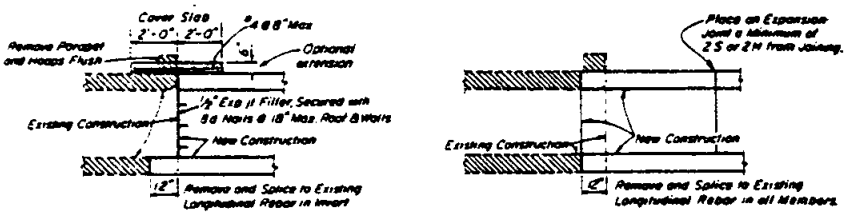

COVER: 1' AND GREATER

COVER: EXPOSED TOP AND GREATER

CULVERT EXTENSION

20° SKEW MAXIMUM

USE OF STANDARD DRAWING

"STRENGTH CLASSIFICATION", SYMBOLIZED BY THE LETTERS "A", "B", "C" ETC., AT THE TOP OF THE DATA TABLE IS MERELY A CONVENIENT DESIGNATION FOR A PARTICULAR STRUCTURAL SECTION FOR A CULVERT OF ANY GIVEN OPENING. IT IS DICTATED BY THE COVER OR DEPTH OF FILL OVER THE TOP SLAB.

LIVE LOAD & RCB DIRECTIONAL TERMINOLOGY

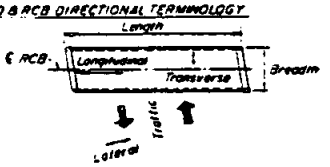

Revision	By	Approved	Date
Concrete	TRP	M.B.	10-82

SAN DIEGO REGIONAL STANDARD DRAWING

BOX CULVERT MISCELLANEOUS DETAILS

RECOMMENDED BY THE SAN DIEGO REGIONAL STANDARDS COMMITTEE

Coordinator R.C.E. 13807 — Dec. 1975 Date

DRAWING NUMBER D-81.1

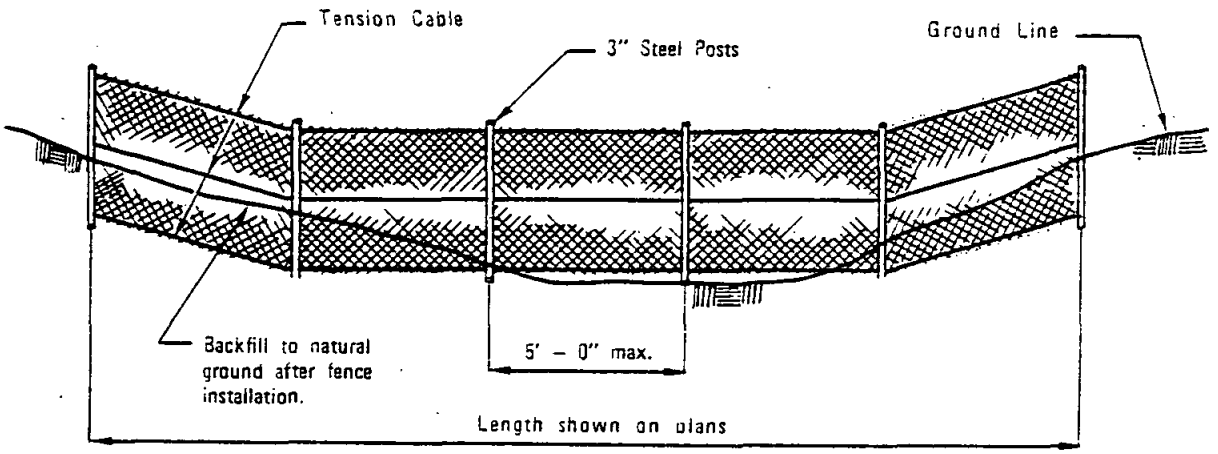

ELEVATION

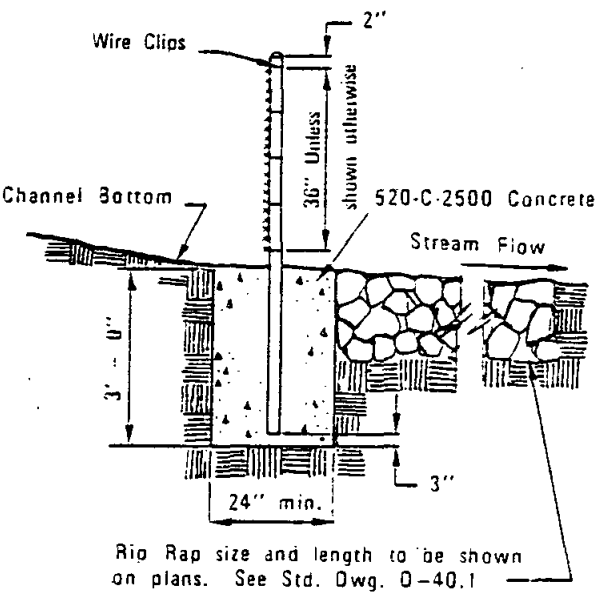

SECTION

NOTES:

1. Fence fabric shall be 2" mesh, 9 gage galvanized wire, chainlink placed on the upstream side of the posts and tension cables.
2. Tension cable shall be 5/16" diameter steel at 18" c/c secured at ends with cable clamps. Secure fence to cable with No. 12 galv. steel wire looped at 6" c/c.
3. Posts shall be 3" diameter steel pipe, 5.79 lb./ft. Fill with mortar after placing.
4. Fence fabric shall be secured to posts with 9 gage wire clips at 9" c/c.

LEGEND ON PLANS

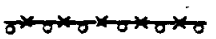

RECOMMENDED BY THE SAN DIEGO REGIONAL STANDARDS COMMITTEE Harry R. Holt Oct 1982 Chairman R.C.E. C13768 Date	SAN DIEGO REGIONAL STANDARD DRAWING	Revision	By	Approved	Date
	DEBRIS FENCE				
DRAWING NUMBER D-82					

ELECTRICAL SYSTEMS

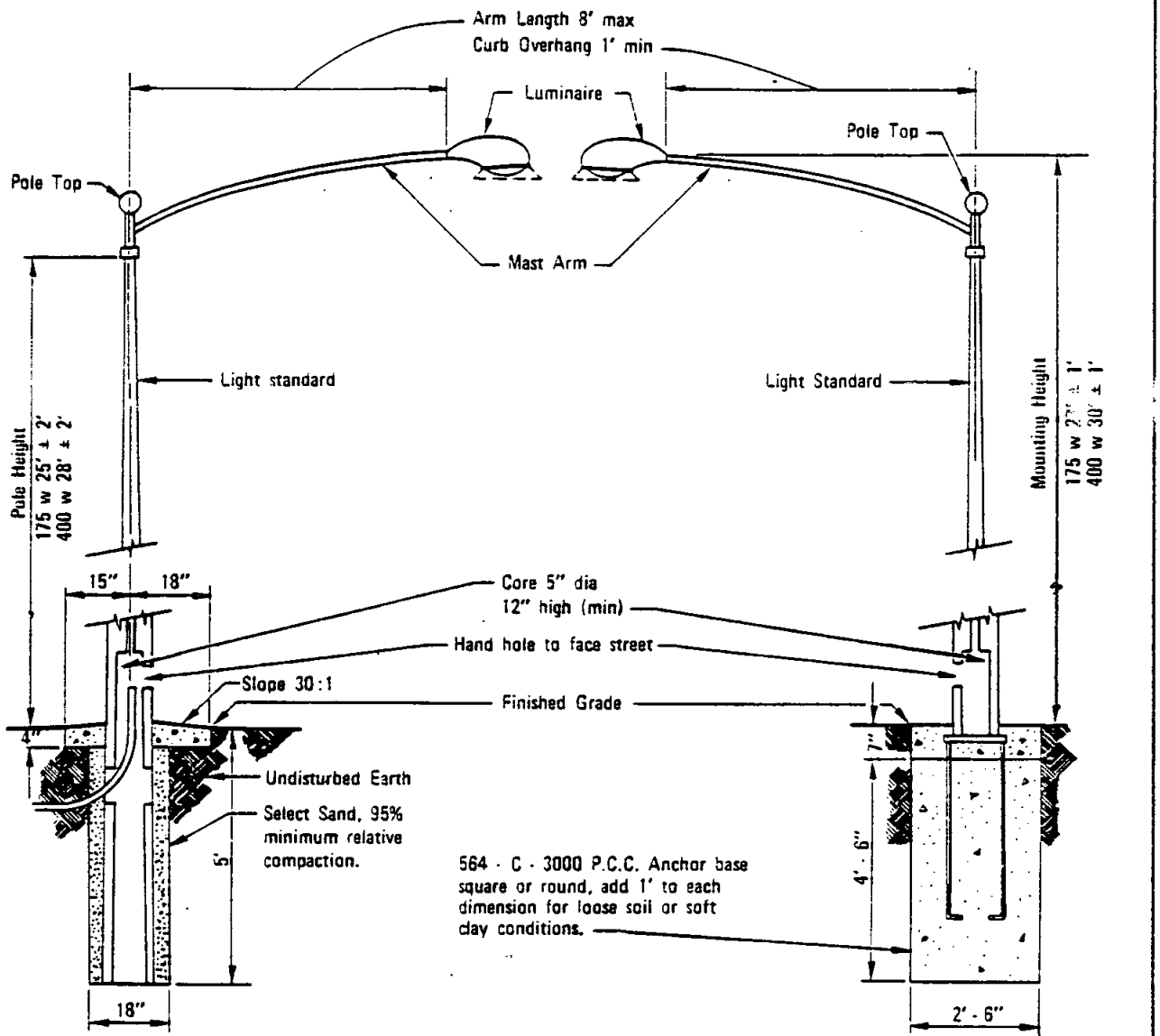

DIRECT BURIAL FOUNDATION

ANCHOR BASE FOUNDATION

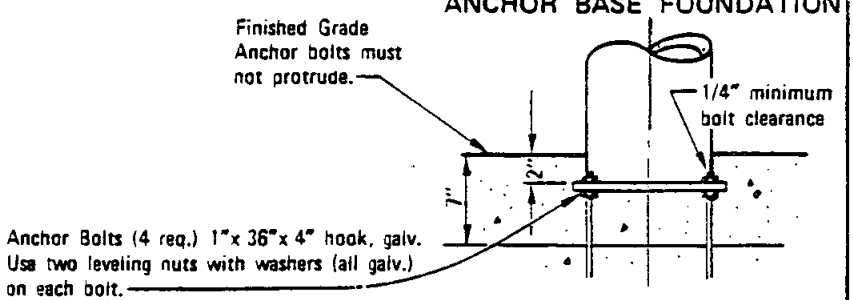

Revision	By	Approved	Date

SAN DIEGO REGIONAL STANDARD DRAWING

ORNAMENTAL STREET LIGHT

RECOMMENDED BY THE SAN DIEGO REGIONAL STANDARDS COMMITTEE

Coordinator R.C.E. 19807 — Dec. 1975 Date

DRAWING NUMBER E-1

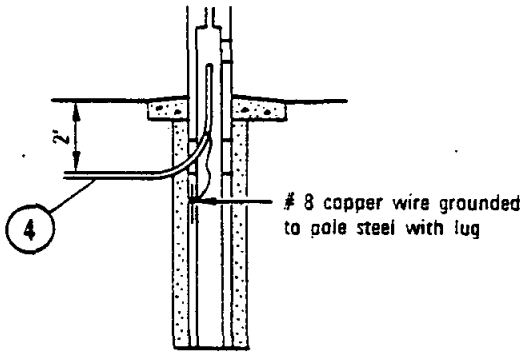

STEEL CONDUIT

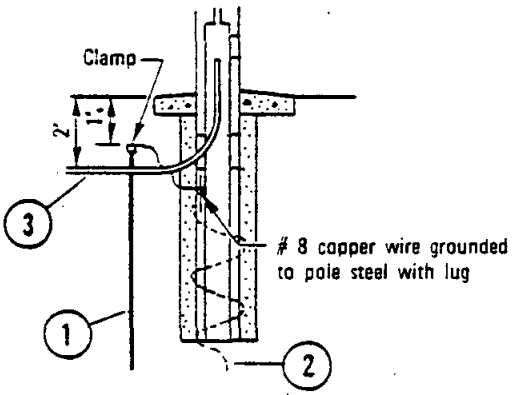

NON–METALLIC CONDUIT

DIRECT BURIAL FOUNDATION

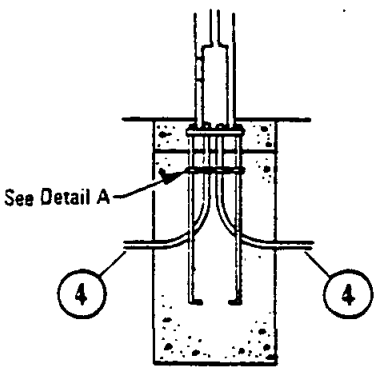

STEEL CONDUIT

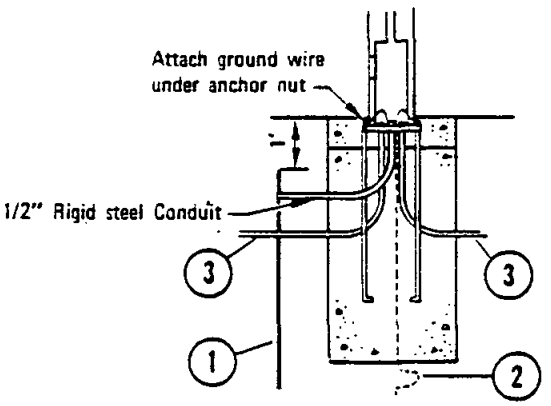

NON–METALLIC CONDUIT

ANCHOR BASE FOUNDATION

1. 3/4"x 8' copper covered steel ground rod.
2. Alternate Ground: .15' no. 4 bare stranded copper wire, coiled.
3. Approved non-metallic conduit.
4. Steel conduit.

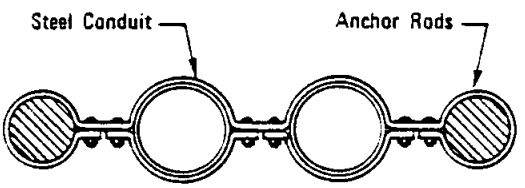

DETAIL A

RECOMMENDED BY THE SAN DIEGO REGIONAL STANDARDS COMMITTEE Coordinator R.C.E. 19807 Date Dec. 1975	SAN DIEGO REGIONAL STANDARD DRAWING	Revision	By	Approved	Date
DRAWING NUMBER E-2	GROUNDING OF CONCRETE LIGHTING STANDARDS				

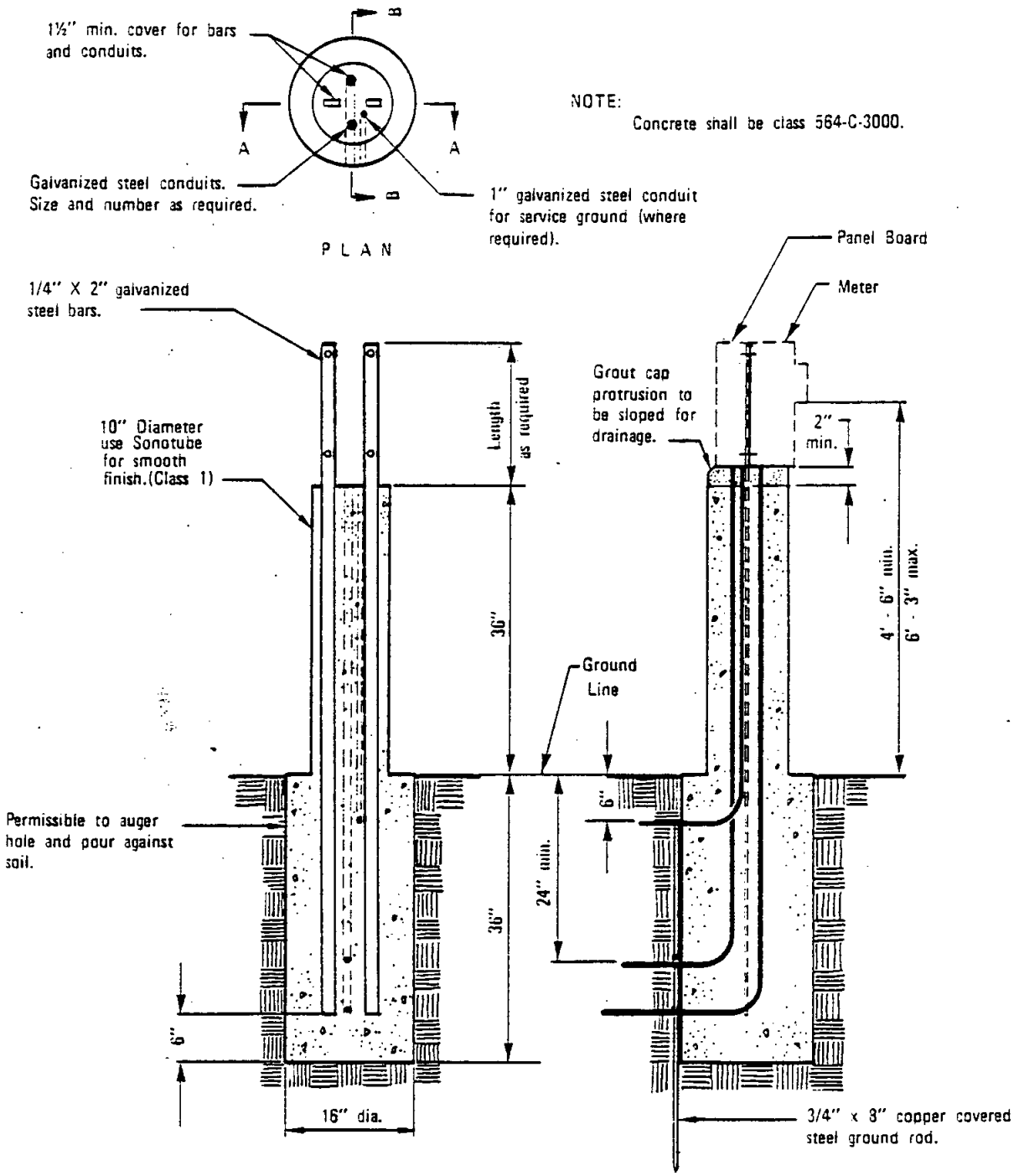

Revision		Approved	Date

SAN DIEGO REGIONAL STANDARD DRAWING

PEDESTAL FOR ELECTRICAL EQUIPMENT

RECOMMENDED BY THE SAN DIEGO REGIONAL STANDARDS COMMITTEE

Harry R. Holt Oct 1982

Chairman R.C.E. 23768 Date

DRAWING NUMBER E-33

GENERAL SURFACE IMPROVEMENTS

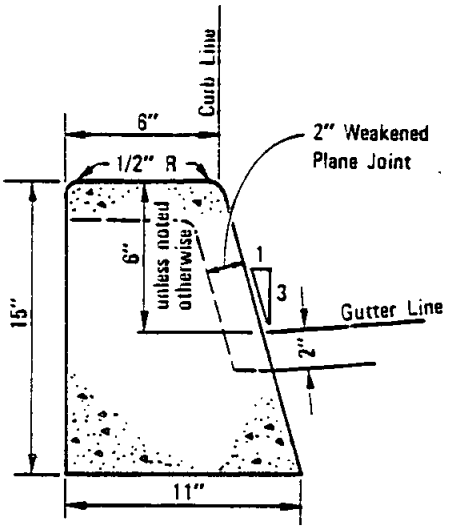

6" CURB

Area = 0.89 SQ. FT.

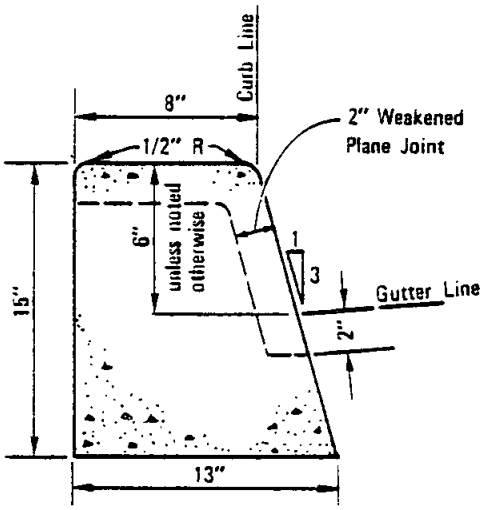

8" CURB

Area = 1.09 SQ. FT.

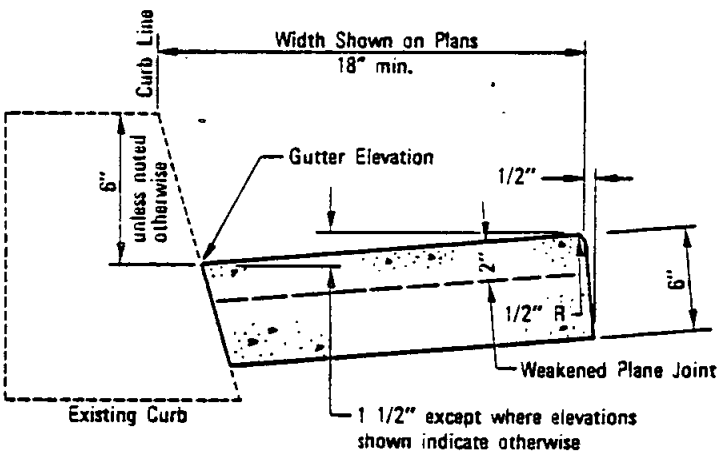

GUTTER

LEGEND ON PLANS

6" curb

NOTES:

1. Concrete shall be 517 - C - 2500.
2. See Standard Drawing G-10 for joint details.

Revision	By	Approved	Date

SAN DIEGO REGIONAL STANDARD DRAWING

CURBS AND GUTTER - SEPARATE

RECOMMENDED BY THE SAN DIEGO REGIONAL STANDARDS COMMITTEE

Coordinator R.C.E. 19807 — Dec. 1975 Date

DRAWING NUMBER G-1

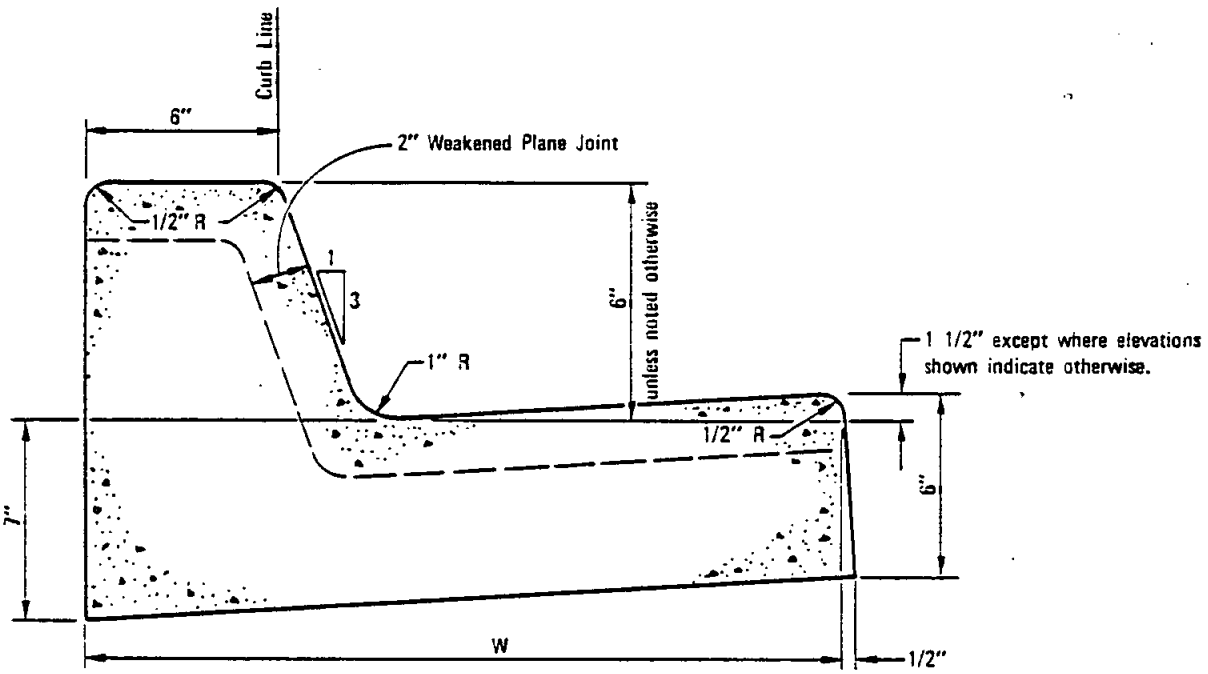

TYPE G & H CURB

TYPE	W	* AREA SQ. FT.
G	24"	1.34
H	30"	1.61

* with 6" Curb Face

NOTES:

1. Concrete shall be 517 - C - 2500.
2. See Standard Drawing G-10 for joint details.

LEGEND ON PLANS

RECOMMENDED BY THE SAN DIEGO REGIONAL STANDARDS COMMITTEE

Coordinator R.C.E. 19807 Date Dec. 1975

DRAWING NUMBER G-2

SAN DIEGO REGIONAL STANDARD DRAWING

CURB AND GUTTER - COMBINED

Revision	By	Approved	Date

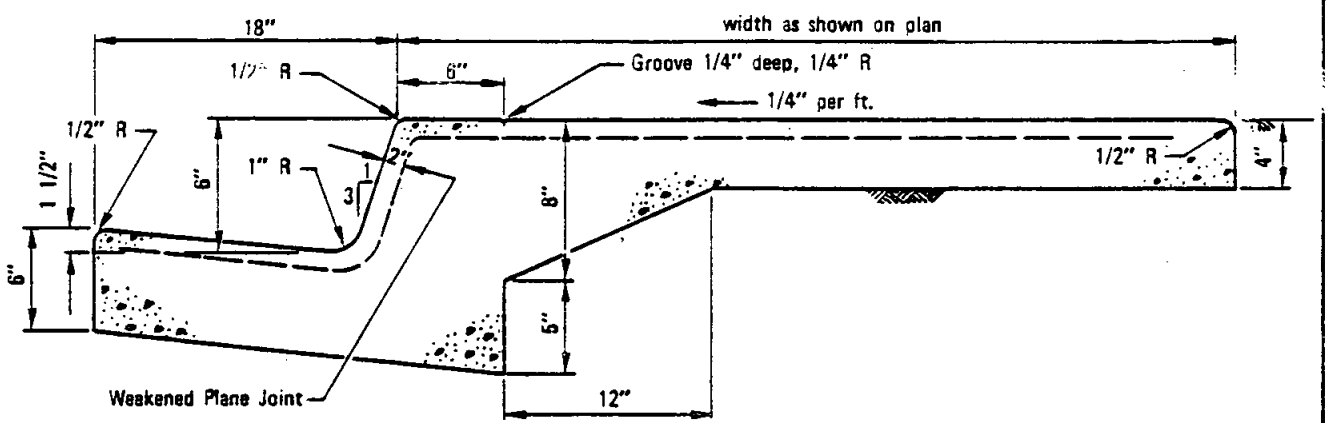

NOTES

1. Concrete shall be 517-C-2500.
2. See Standard Drawing G-10 for joint details.
3. Monolithic curb, gutter and sidewalk is to be used with Agency approval only.

LEGEND ON PLANS

Revision	By	Approved	Date
Thickness	[illegible]	D.S.	7-79
Thickness	HA	M.B.	6-82

SAN DIEGO REGIONAL STANDARD DRAWING

MONOLITHIC CURB, GUTTER AND SIDEWALK

RECOMMENDED BY THE SAN DIEGO REGIONAL STANDARDS COMMITTEE

[signature] Dec. 1975

Coordinator R.C.E. 19807 Date

DRAWING NUMBER G-3.1

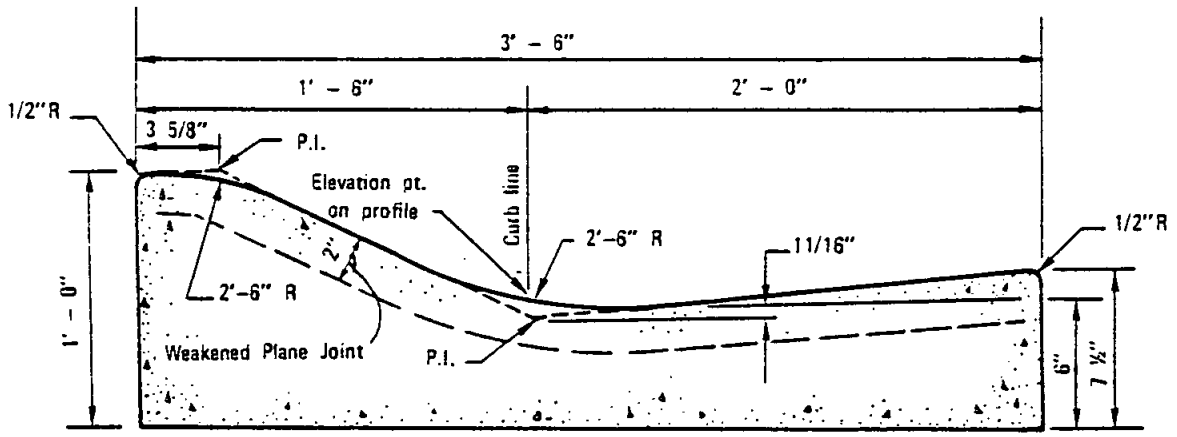

CURB AREA
(2.23 sq. ft.)

NOTES:

1. Transition to type G curb at all curb returns, except where sidewalk ramps are provided, and at all cul-de-sacs with drainage structures.
2. See Standard Drawing D-6.1 for Rolled Curb Inlet.
3. Concrete shall be 520-C-2500.
4. See Standard Drawing G-10 for joint details.

LEGEND ON PLANS

RECOMMENDED BY THE SAN DIEGO REGIONAL STANDARDS COMMITTEE Dec. 1975 Coordinator R.C.E. 19807 Date	SAN DIEGO REGIONAL STANDARD DRAWING	Revision	By	Approved	Date
		X-Sect.	TRP	M. B.	10-82
DRAWING NUMBER G-4.1	CURB AND GUTTER-ROLLED				

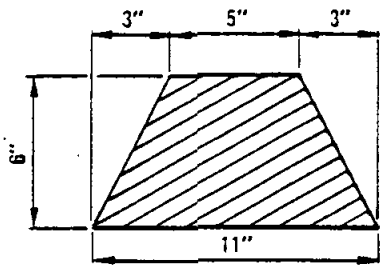

TYPE A-SECTION

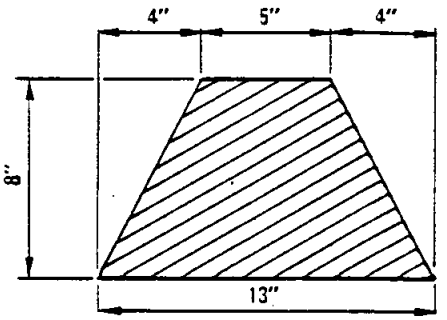

TYPE B-SECTION

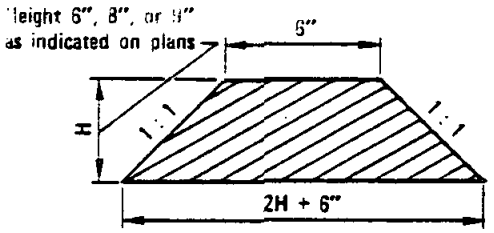

TYPE C-SECTION

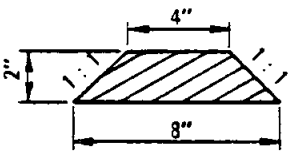

TYPE D-SECTION

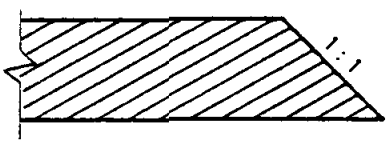

ALL TYPES—SIDE VIEW

Slope end of dike 1 : 1
when not joining
other improvements

APPROX. DIKE QUANTITIES	
TYPE	TONS/LIN. FT.
A	0.0250
B	0.0375
C–6"	0.0375
C–8"	0.0583
C–9"	0.0702
D	0.0062

NOTES

1. Dike is to be placed on a minimum 2" of A.C. road surfacing, extending throughout the width of the dike.
2. AR-8000 grade asphalt to be used for all dikes
3. A.C. dikes may be shaped and compacted with an extrusion machine or other equipment capable of shaping and compacting the material to the required cross section.

LEGEND ON PLANS

Type A Dike

Revision	By	Approved	Date

SAN DIEGO REGIONAL STANDARD DRAWING

DIKES (BERMS) - ASPHALT CONCRETE

RECOMMENDED BY THE SAN DIEGO REGIONAL STANDARDS COMMITTEE

Coordinator R.C.E. 19807 — Dec. 1975 Date

DRAWING NUMBER G-5

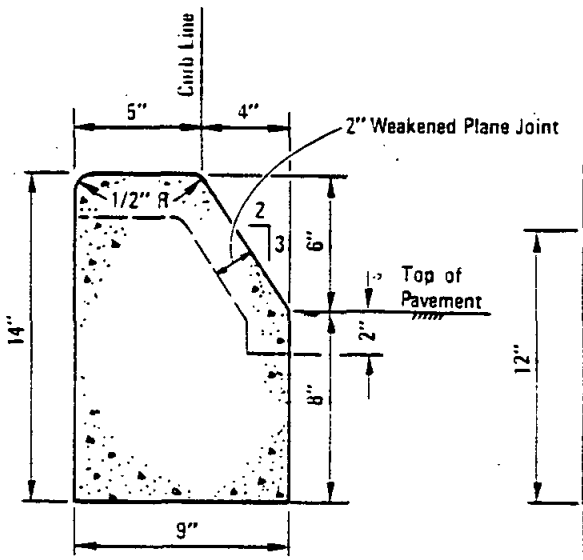

B–1
AREA = 0.79 SQ.FT.

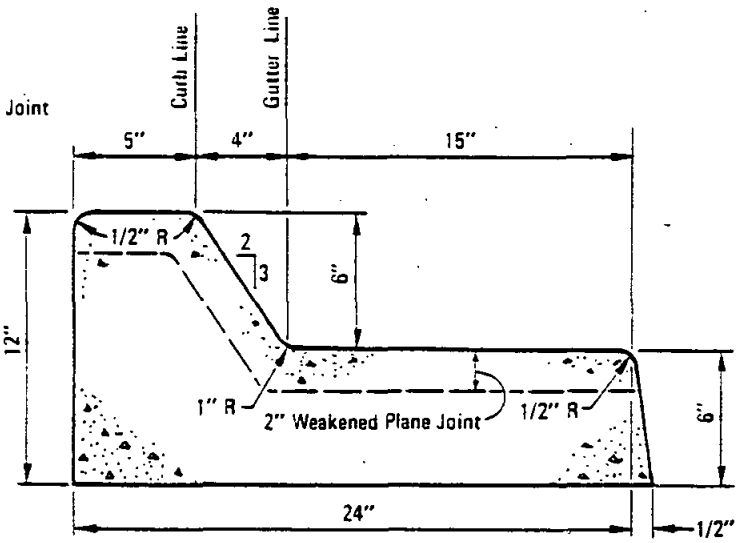

B–2
AREA = 1.29 SQ.FT.

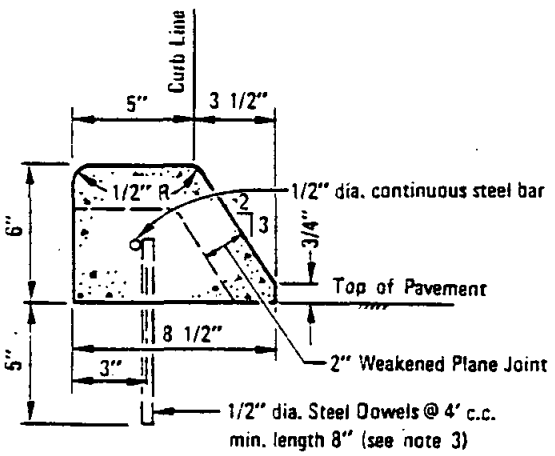

B–3
AREA = 0.29 SQ.FT.

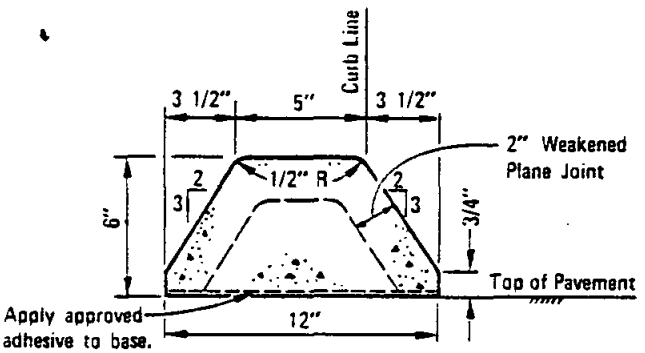

B–4
AREA = 0.35 SQ.FT.

NOTES

1. Concrete shall be 517-C-2500.
2. See Standard Drawing G-10 for joint details.
3. Extruded type B-3 curb shall be anchored to existing pavement by placing steel dowels and reinforcing steel as shown or by using an approved adhesive.

LEGEND ON PLANS

Type B-2 Curb and Gutter

Type B-1, B-3, B-4 Curb

RECOMMENDED BY THE SAN DIEGO REGIONAL STANDARDS COMMITTEE Dec. 1975 Coordinator R.C.E. 19807 Date	SAN DIEGO REGIONAL STANDARD DRAWING	Revision	By	Approved	Date
		Note 1		0.5	7.79
DRAWING NUMBER G-6	CURBS AND GUTTER - MEDIANS				

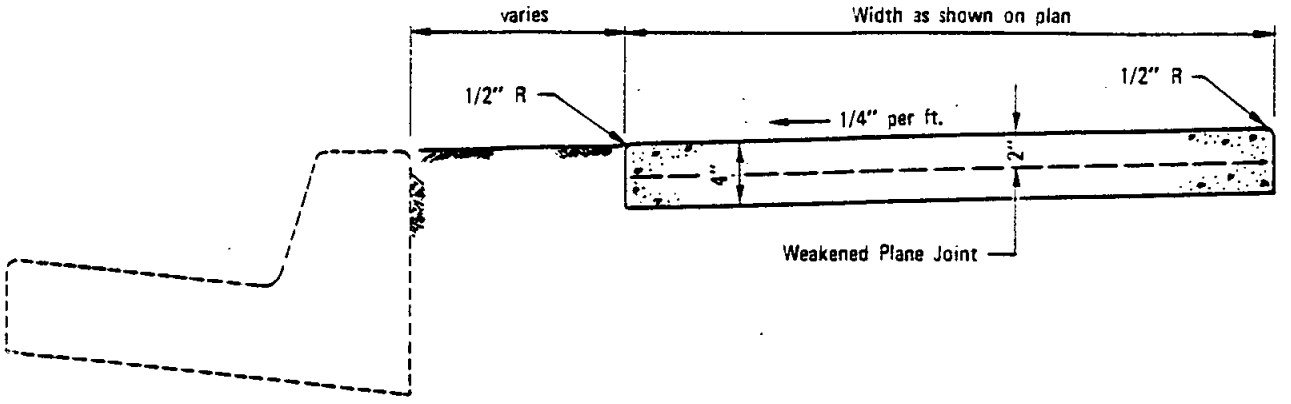

NON–CONTIGUOUS

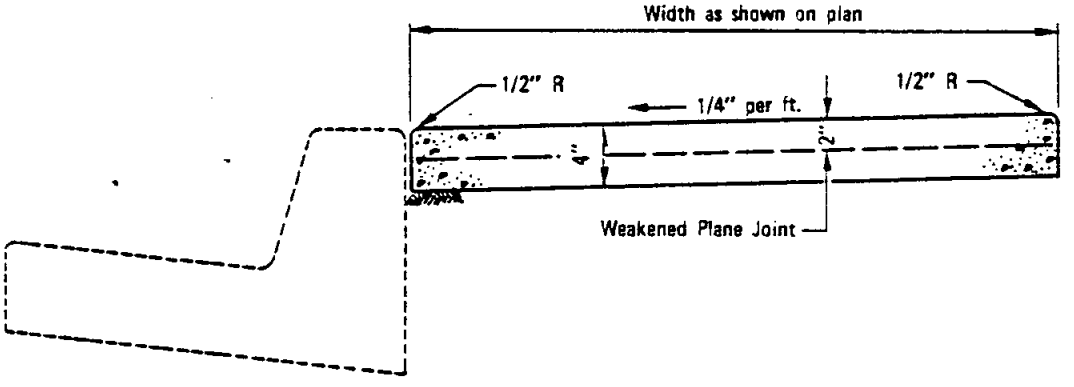

CONTIGUOUS

NOTES

1. Concrete shall be 517 - C - 2500.
2. See Standard Drawing G-10 for joint details.

LEGEND ON PLANS

Revision	By	Approved	Date
Thickness			7-79
Thickness			6-88

SAN DIEGO REGIONAL STANDARD DRAWING

SIDEWALK - TYPICAL SECTIONS

RECOMMENDED BY THE SAN DIEGO REGIONAL STANDARDS COMMITTEE

Coordinator R.C.E. 19807 — Dec. 1979 Date

DRAWING NUMBER G-7.1

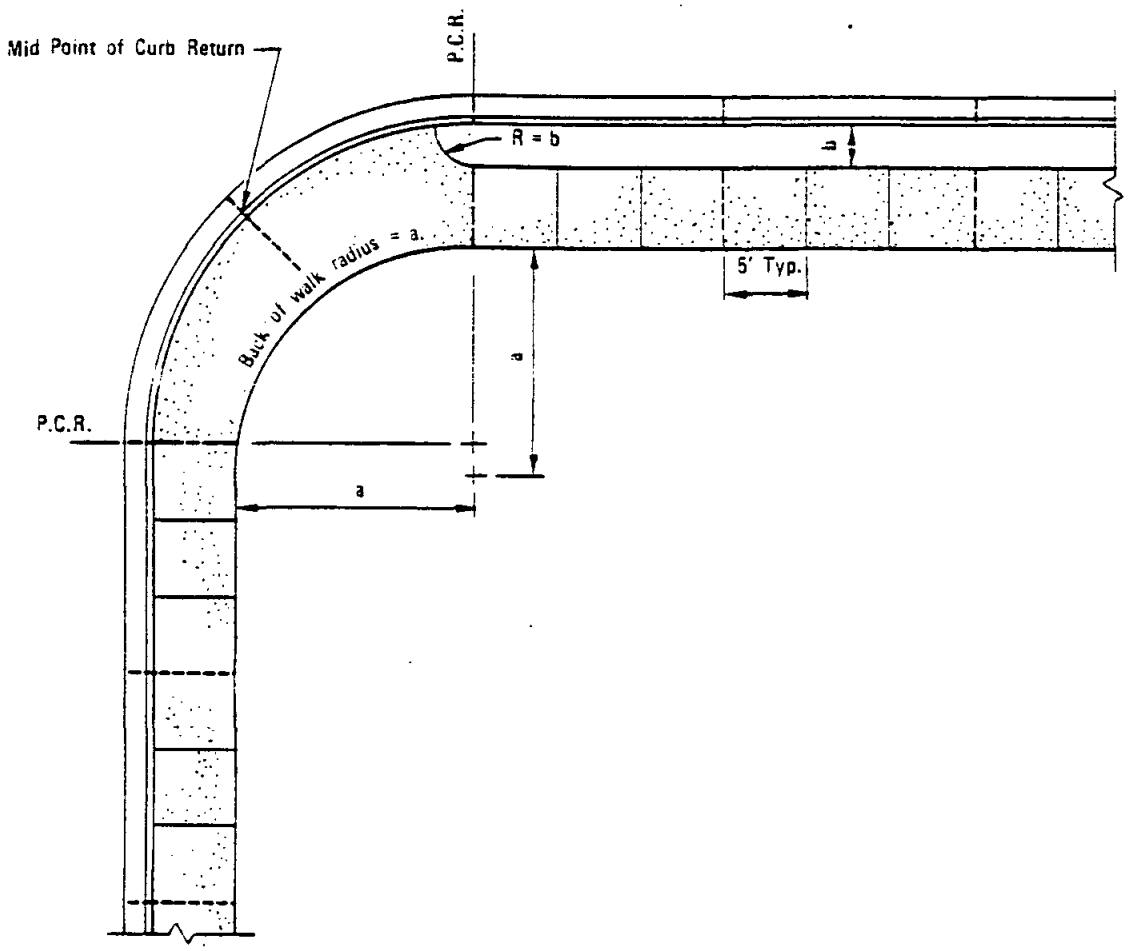

NOTES

1. Expansion Joints ———— at curb returns, and adjacent to structures. (See Standard Drawing G-10).
2. Weakened Plane Joints - - - - - - at mid point of curb return, when required, and at 15' intervals from P.C.R.'s (See Standard Drawing G-10).
3. 1/4" grooves ———— with 1/4" radius edges at 5' intervals.
4. See Standard Drawing G-8 for installation of sidewalk ramps.

Revision	By	Approved	Date

SAN DIEGO REGIONAL STANDARD DRAWING

SIDEWALK JOINT LOCATIONS

RECOMMENDED BY THE SAN DIEGO REGIONAL STANDARDS COMMITTEE

Coordinator R.C.E. 19807 — Dec. 1975 Date

DRAWING NUMBER G-9

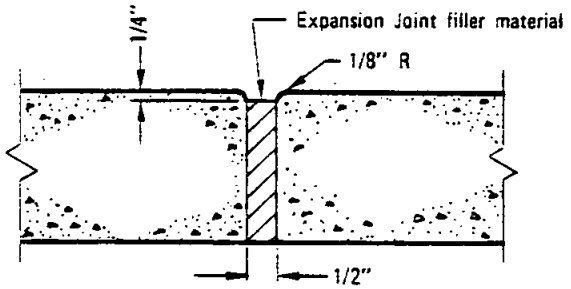

EXPANSION JOINT

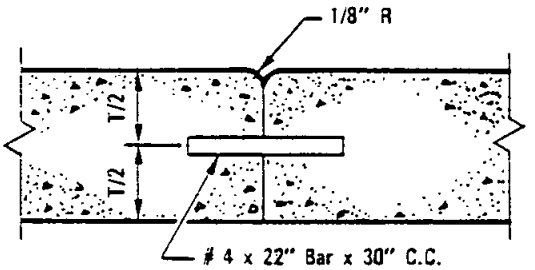

CONTACT JOINT

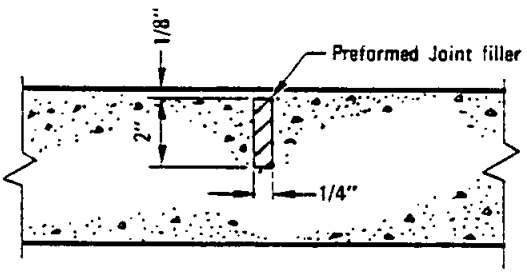

WEAKENED PLANE JOINT
PAVEMENT

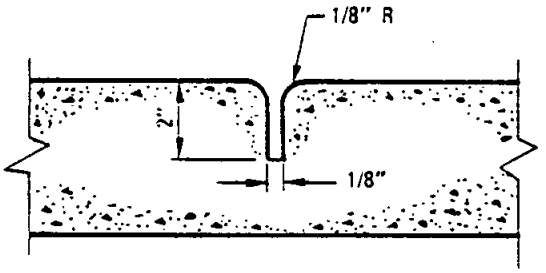

WEAKENED PLANE JOINT
SIDEWALK

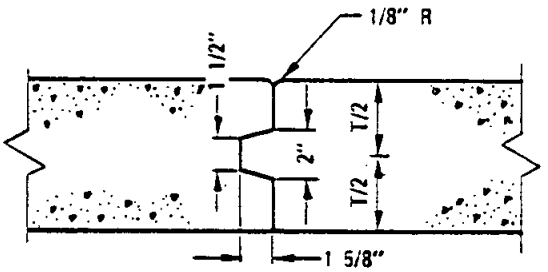

KEYED JOINT

RECOMMENDED BY THE SAN DIEGO REGIONAL STANDARDS COMMITTEE Coordinator R.C.E. 19807 Date Feb. 1975	SAN DIEGO REGIONAL STANDARD DRAWING	Revision	By	Approved	Date
		Radius		O. S.	7.79
DRAWING NUMBER G-10	CONCRETE JOINT DETAILS				

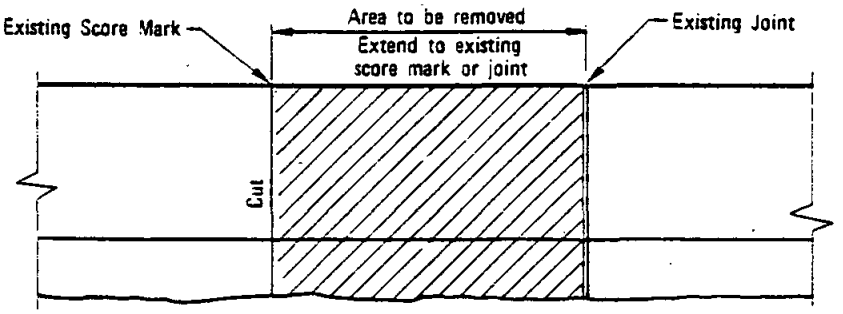

SIDEWALK PLAN

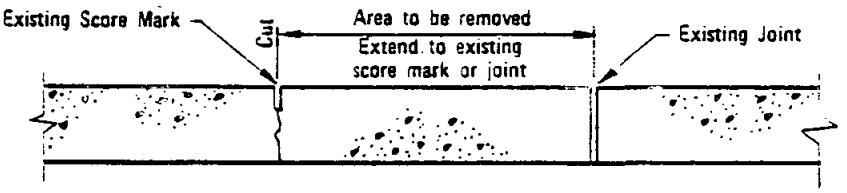

SIDEWALK SECTION

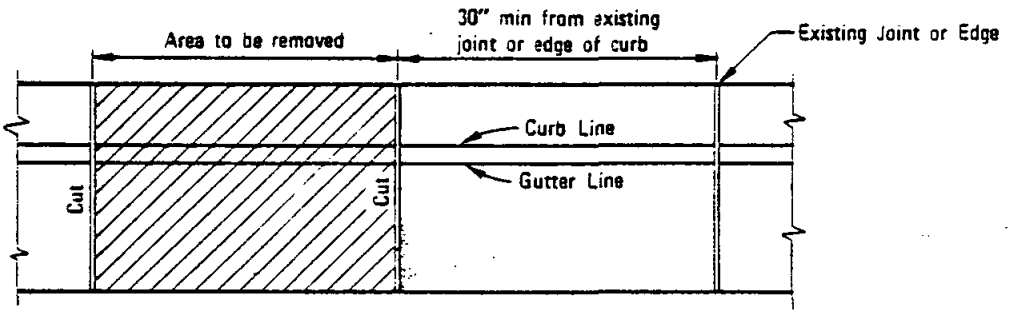

CURB PLAN

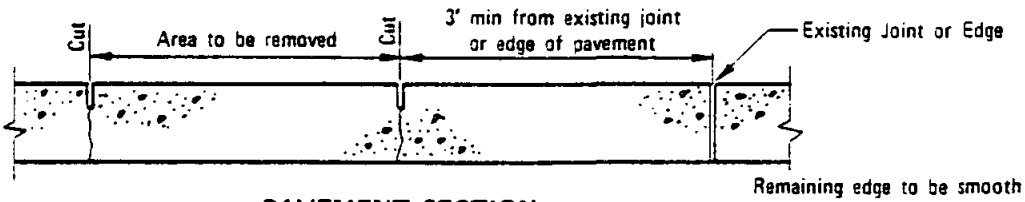

PAVEMENT SECTION

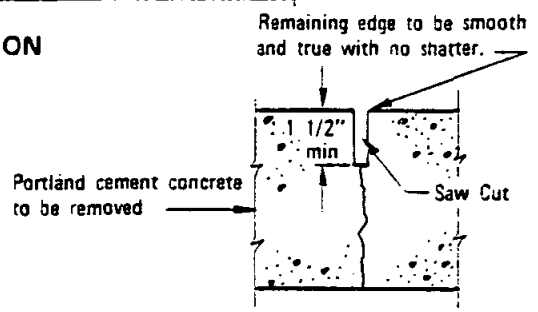

SECTION
Showing Cut

NOTE

When distance from, "Area to be removed", to existing joint, edge or score mark is less than minimum shown, "Area to be removed", shall be extended to that joint, edge or score mark.

Revision	By	Approved	Date

SAN DIEGO REGIONAL STANDARD DRAWING

PORTLAND CEMENT CONCRETE CURB, GUTTER, SIDEWALK AND PAVEMENT REMOVAL AND REPLACEMENT

RECOMMENDED BY THE SAN DIEGO REGIONAL STANDARDS COMMITTEE

Coordinator R.C.E. 19807 — Dec. 1975 Date

DRAWING NUMBER G-11

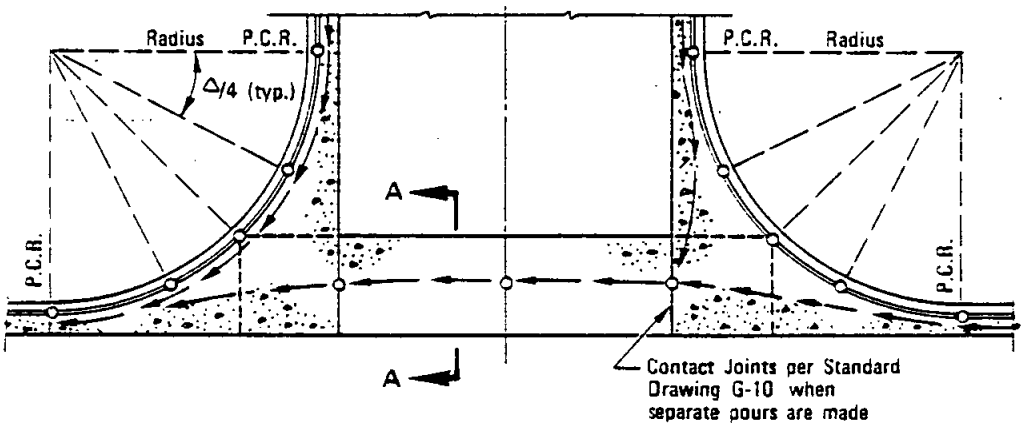

PLAN

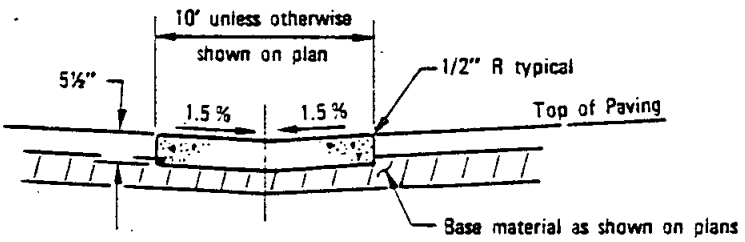

SECTION A–A

NOTES:

1. Concrete shall be 560-C-3250.
2. - - - - - - - - - - - - =Weakened plane joints.
3. ←——— ←——— =Typical flowlines.
4. o =Elevations to be shown on plans.
5. Return segments to be 5½" thick.

LEGEND ON PLANS

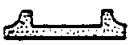

RECOMMENDED BY THE SAN DIEGO REGIONAL STANDARDS COMMITTEE	SAN DIEGO REGIONAL STANDARD DRAWING	Revision	By	Approved	Date
		Thickness	[illegible]	O.S.	7-79
Coordinator R.C.E. 19807 Date Dec. 1975		Note 1	TKP	M.B.	10-82
DRAWING NUMBER G-12.1	CROSS GUTTER				

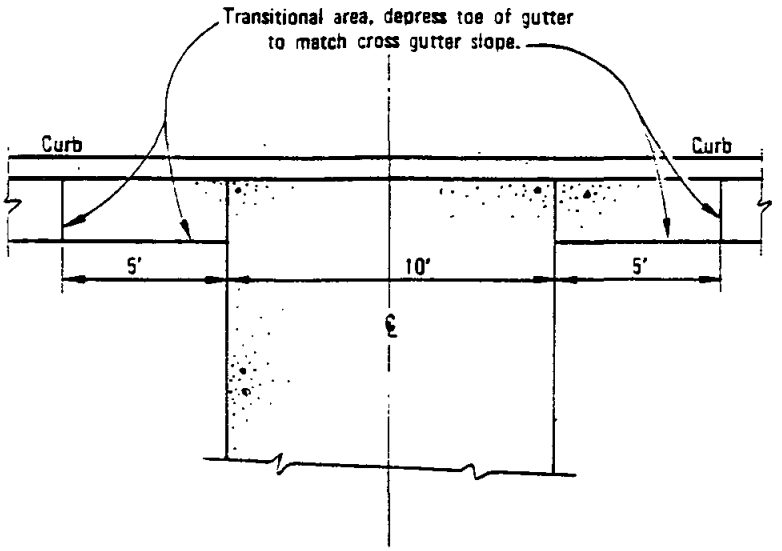

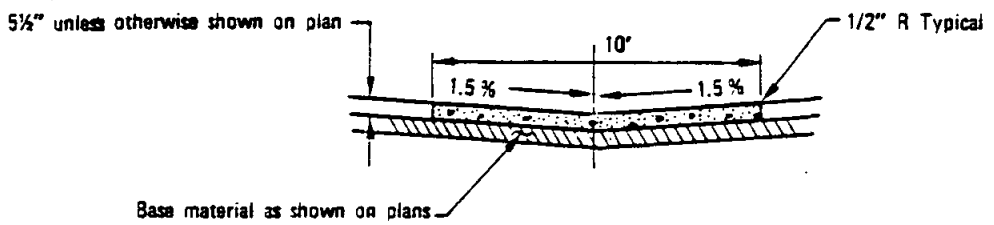

NOTES:

1. Cross gutter to be constructed where the drainage is carried across street.
2. Minimum allowable cross slope is 0.5 %.
3. Concrete shall be 560-C-3250.

LEGEND ON PLANS

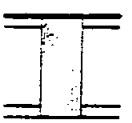

Revision	By	Approved	Date
Thickness		O.S.	7-75
Conc.	TRA	M.B.	10-82

SAN DIEGO REGIONAL STANDARD DRAWING

MID-BLOCK CROSS GUTTER

RECOMMENDED BY THE SAN DIEGO REGIONAL STANDARDS COMMITTEE

Coordinator R.C.E. 19807 — Date Dec. 1975

DRAWING NUMBER G-13.1

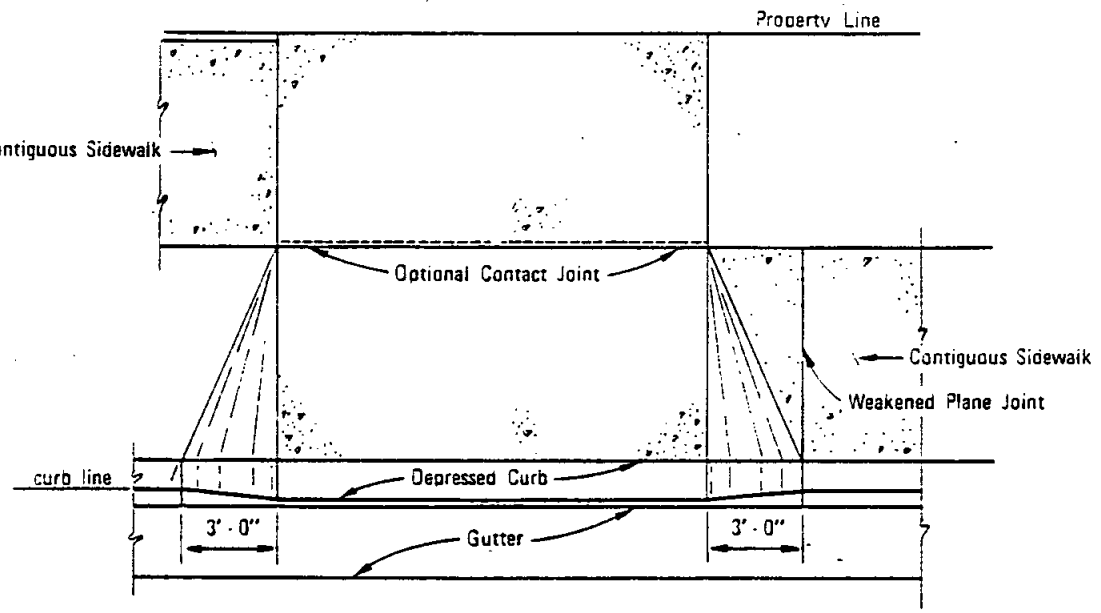

PLAN

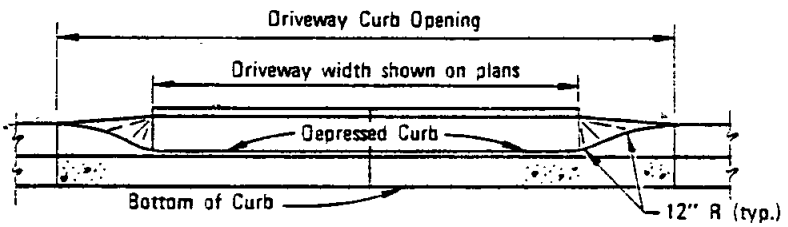

ELEVATION

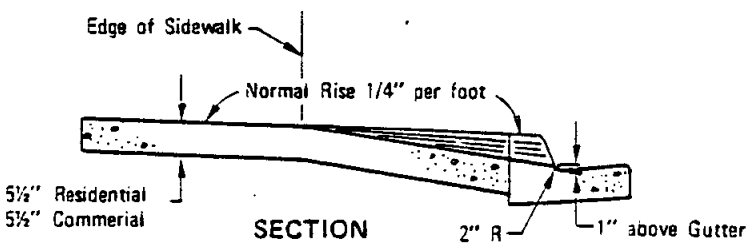

SECTION

NOTES

1. No concrete shall be placed until forms and subgrade are inspected by the Agency.
2. Concrete shall be 520-C-2500.
3. See standard drawings G-15 and G-16 for width and location requirements.

LEGEND ON PLANS

℄ of — Residential (Commercial) Driveway

RECOMMENDED BY THE SAN DIEGO REGIONAL STANDARDS COMMITTEE	SAN DIEGO REGIONAL STANDARD DRAWING	Revision	By	Approved	Date
		Thickness	[illegible]	D. S.	7-79
		Thickness	[illegible]	M. B.	5-82
	CONCRETE DRIVEWAYS	Conc.	TRA	M. B.	10-82
DRAWING NUMBER G-14.1					

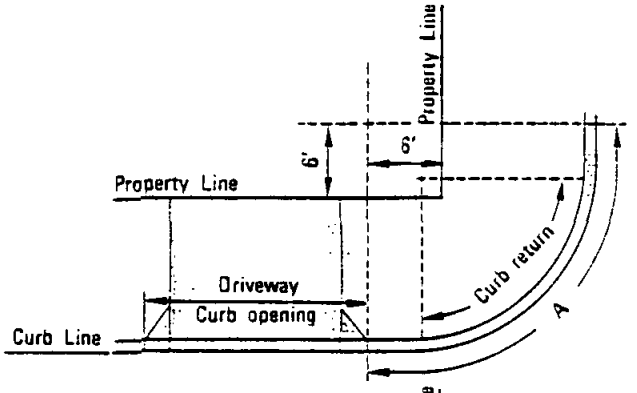

REQUIREMENT 1

No portion of any curb opening shall be permitted within 6' of the intersection of the prolonged property lines and the curb as shown by arc A.

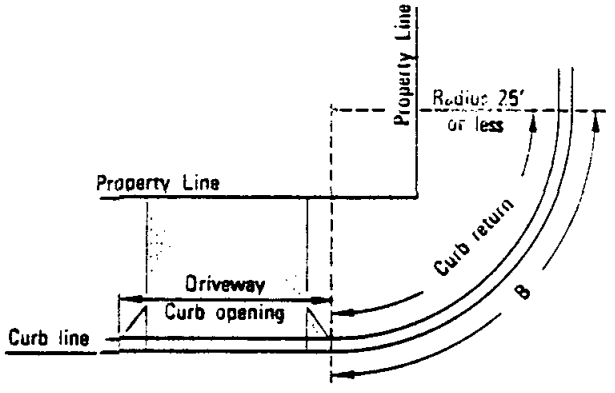

REQUIREMENT 2

No portion of any curb opening shall be permitted in the curb return where the radius of curb is 25' or less, as shown by arc B.

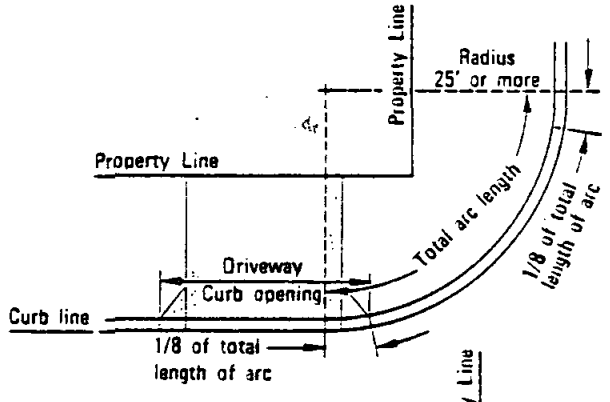

REQUIREMENT 3

On all curb returns where the radius is 25' or more, curb openings may encroach upon each end of the return a distance equal to 12 1/2% or 1/8 of the total length of the arc on the curb return, thus leaving at least 75% of the length of arc on the return face free from driveway encroachment, provided Requirement 1 is met.

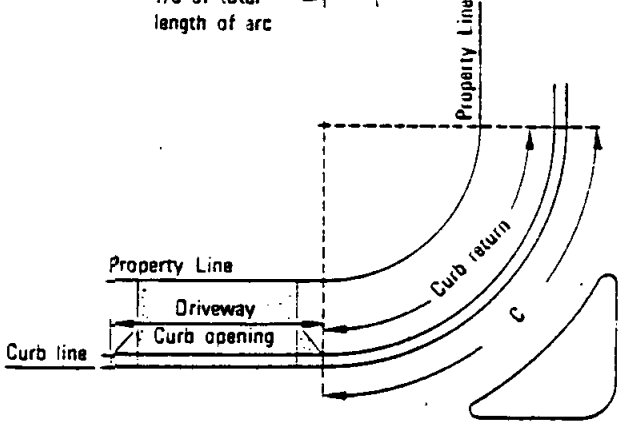

REQUIREMENT 4

No portion of any curb opening shall be permitted in the curb return where a seperate turning movement is provided, as shown by arc C

Revision	By	Approved	Date

SAN DIEGO REGIONAL STANDARD DRAWING

DRIVEWAY LOCATION - ADJACENT TO CURB RETURNS AND STREET LINES

RECOMMENDED BY THE SAN DIEGO REGIONAL STANDARDS COMMITTEE

Coordinator R.C.E. 19807 — Dec. 1975 Date

DRAWING NUMBER G-15

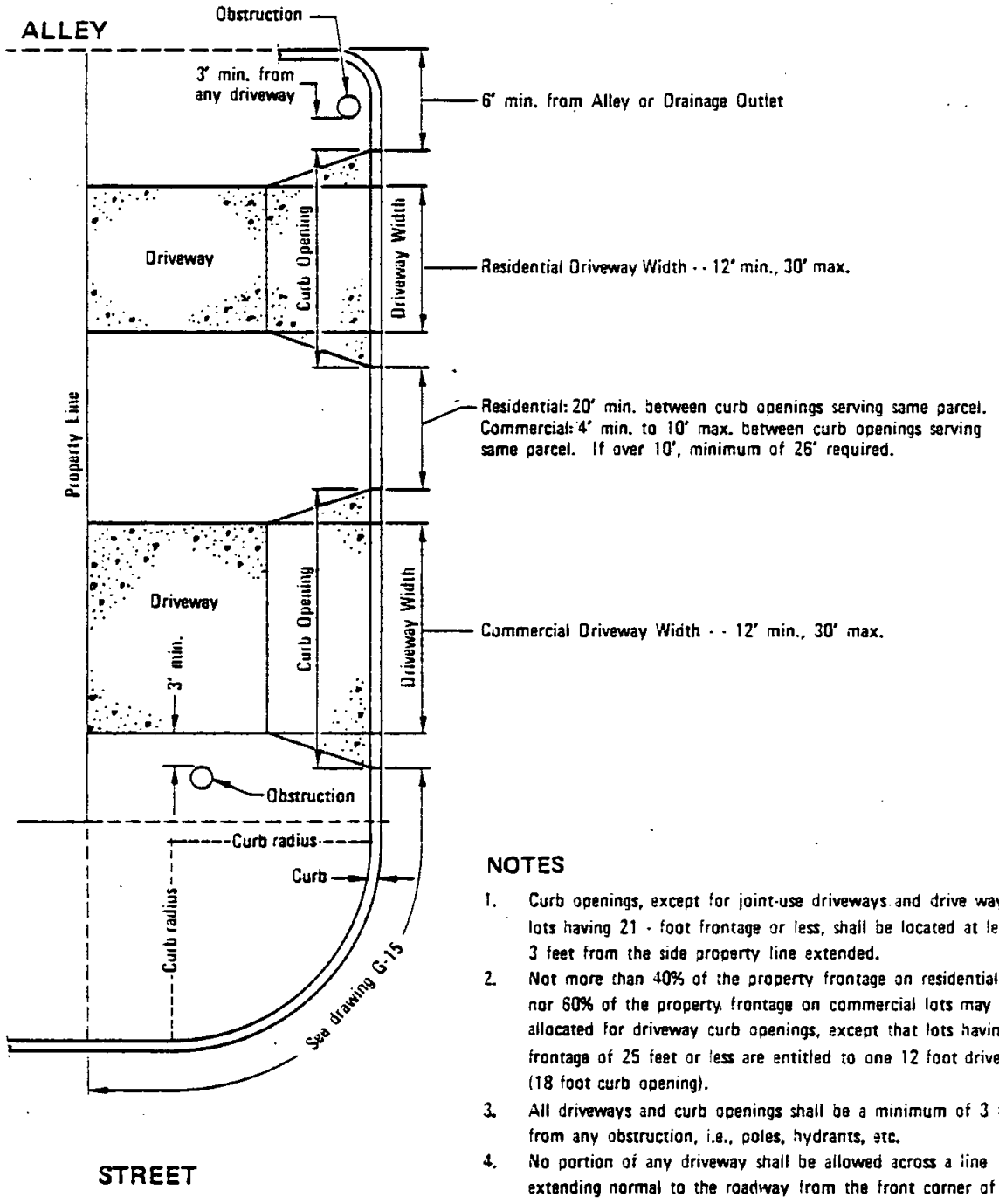

NOTES

1. Curb openings, except for joint-use driveways and drive ways on lots having 21 - foot frontage or less, shall be located at least 3 feet from the side property line extended.
2. Not more than 40% of the property frontage on residential lots, nor 60% of the property frontage on commercial lots may be allocated for driveway curb openings, except that lots having frontage of 25 feet or less are entitled to one 12 foot driveway (18 foot curb opening).
3. All driveways and curb openings shall be a minimum of 3 feet from any obstruction, i.e., poles, hydrants, etc.
4. No portion of any driveway shall be allowed across a line extending normal to the roadway from the front corner of the property, except that joint-use driveways may be permitted in special instances where written approval of both property owners is filed with the Agency.

RECOMMENDED BY THE SAN DIEGO REGIONAL STANDARDS COMMITTEE Coordinator R.C.E. 15807 Dec. 1975 Date	SAN DIEGO REGIONAL STANDARD DRAWING	Revision	By	Approved	Date
DRAWING NUMBER G-16	DRIVEWAY LOCATION AND WIDTH REQUIREMENTS				

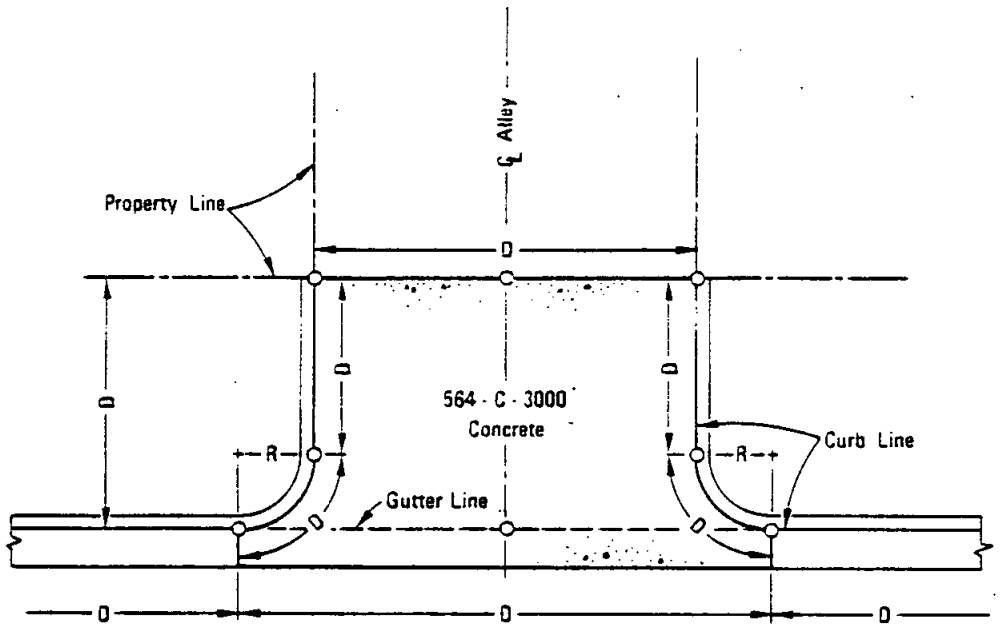

TYPICAL PLAN

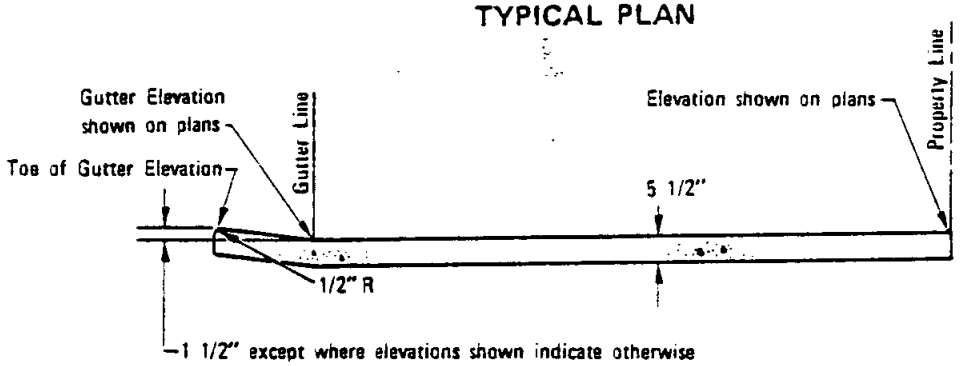

℄ SECTION

NOTES

1. Sidewalk Ramps shall be installed as required by Agency.
2. D = distance shown on plans.
3. R = radius shown on plans (3 ft. minimum).
4. O = elevations shown on plans (top of curb, and gutter elev.).

LEGEND ON PLANS

Revision	By	Approved	Date
Thickness	TC	D.S.	7.79

SAN DIEGO REGIONAL STANDARD DRAWING

ALLEY APRON

RECOMMENDED BY THE SAN DIEGO REGIONAL STANDARDS COMMITTEE

Coordinator R.C.E. 19807 Date Dec. 1975

DRAWING NUMBER G-17

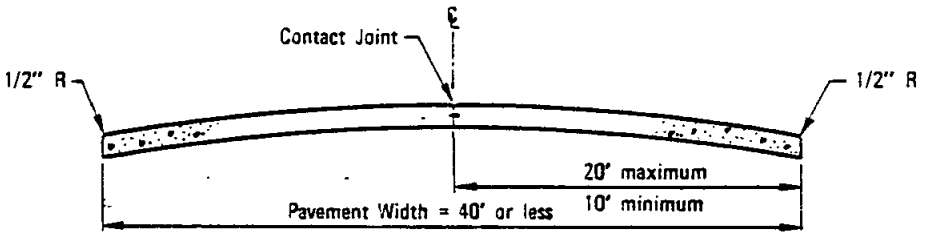

TYPICAL SECTION

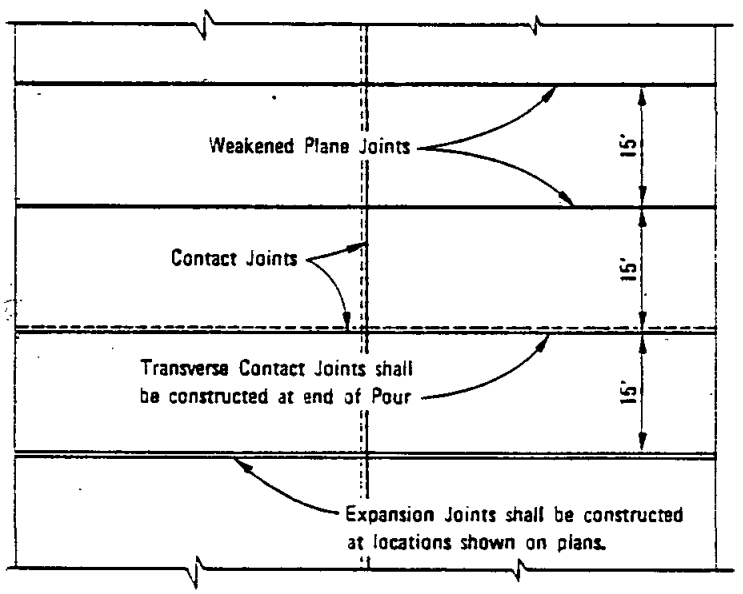

TYPICAL PLAN

NOTES

1. Concrete shall be 564 - C - 3000.
2. See Standard Drawing G-10 for Joint Details.
3. Adjust 15' interval between Transverse Joints to match adjacent existing improvements.

RECOMMENDED BY THE SAN DIEGO REGIONAL STANDARDS COMMITTEE Coordinator R.C.E. 19807 Dec. 1975 Date	SAN DIEGO REGIONAL STANDARD DRAWING	Revision	By	Approved	Date
DRAWING NUMBER G-18	CONCRETE PAVEMENT, WIDTH 40' OR LESS				

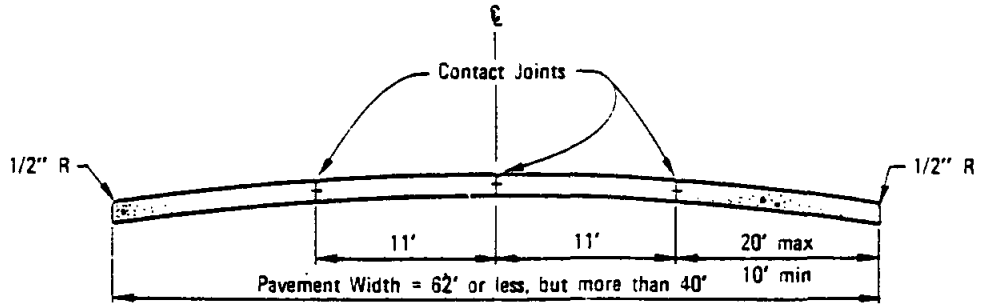

TYPICAL SECTION

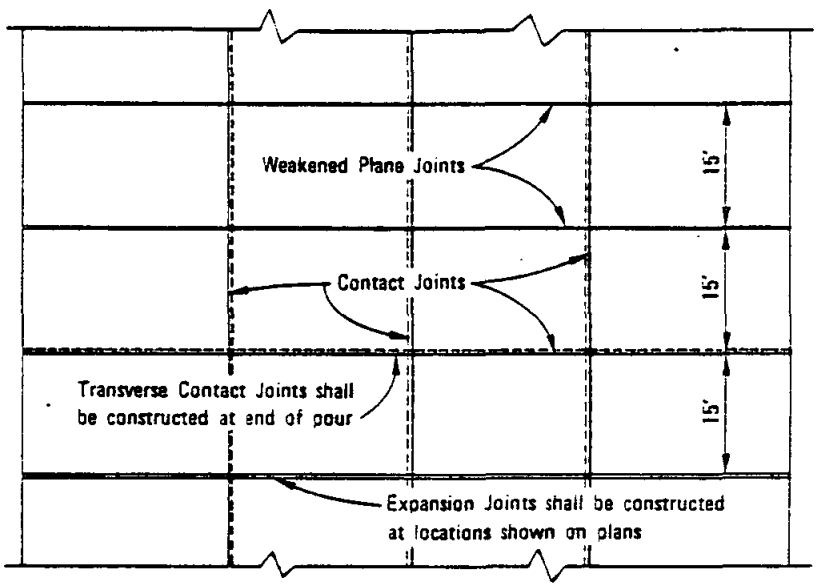

TYPICAL PLAN

NOTES

1. Concrete shall be 564 - C - 3000.
2. See Standard Drawing G-10 for joint details.
3. Adjust 15' interval between Transverse Joints to match adjacent existing improvements.

Revision	By	Approved	Date

SAN DIEGO REGIONAL STANDARD DRAWING

CONCRETE PAVEMENT, WIDTH 40' TO 62'

RECOMMENDED BY THE SAN DIEGO REGIONAL STANDARDS COMMITTEE

Coordinator R.C.E. 19807 — Dec. 1975 Date

DRAWING NUMBER G-19

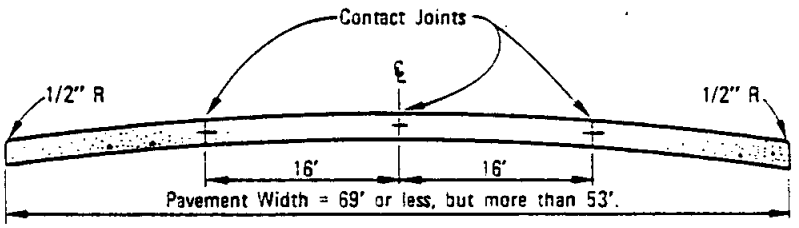

TYPICAL SECTION

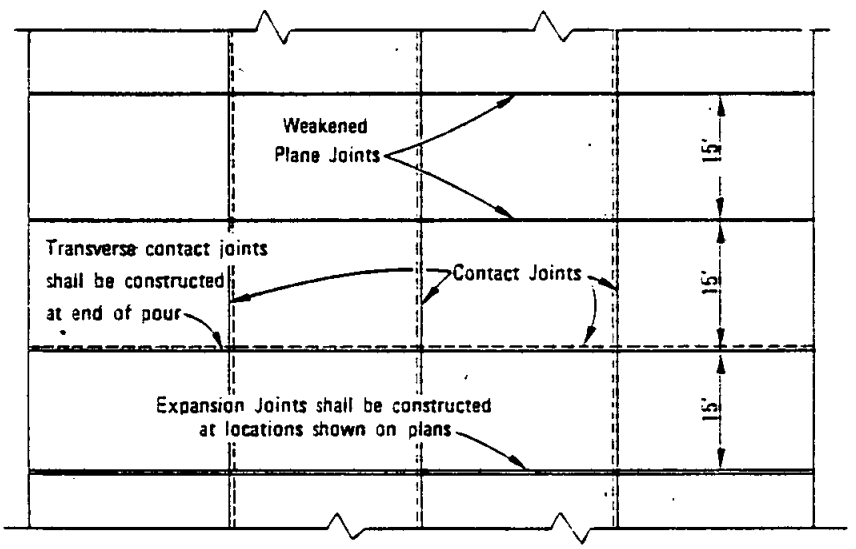

TYPICAL PLAN

NOTES

1. Concrete shall be 564 - C - 3000.
2. See Standard Drawing G-10 for Joint Details.
3. Adjust 15' interval between Transverse Joints to match adjacent existing improvements.

RECOMMENDED BY THE SAN DIEGO REGIONAL STANDARDS COMMITTEE Coordinator R.C.E. 19807 Dec. 1975 Date	SAN DIEGO REGIONAL STANDARD DRAWING	Revision	By	Approved	Date
DRAWING NUMBER G-20	CONCRETE PAVEMENT, WIDTH 53' TO 69'				

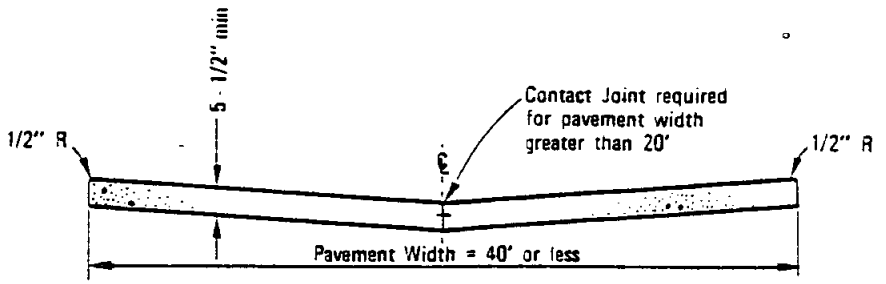

TYPICAL SECTION

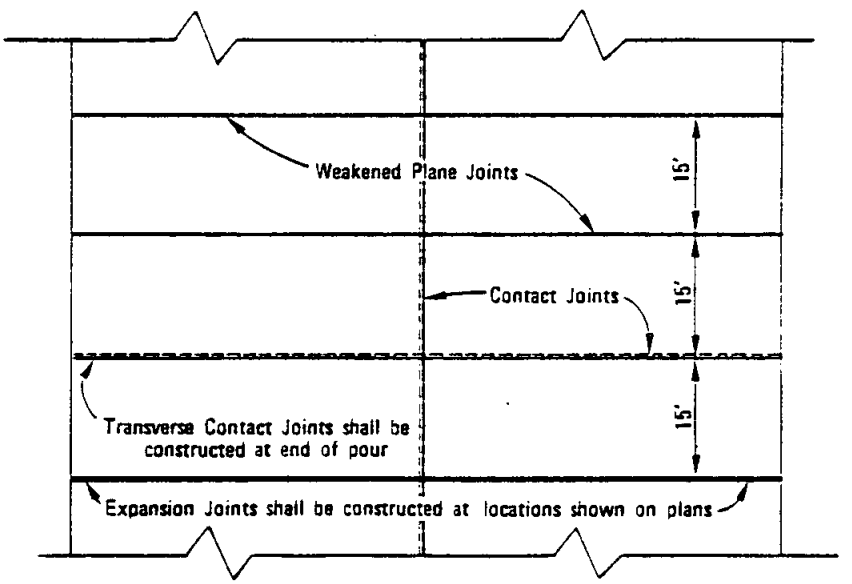

TYPICAL PLAN

NOTES

1. Concrete shall be 564 - C - 3000.
2. See Standard Drawing G-10 for joint details.
3. Adjust 15' interval between Transverse Joints to match adjacent existing improvements.

Revision	By	Approved	Date

SAN DIEGO REGIONAL STANDARD DRAWING

CONCRETE PAVEMENT, ALLEY SECTION, WIDTH 40' OR LESS

RECOMMENDED BY THE SAN DIEGO REGIONAL STANDARDS COMMITTEE

Coordinator R.C.E. 19807 — Dec. 1975 Date

DRAWING NUMBER G-21

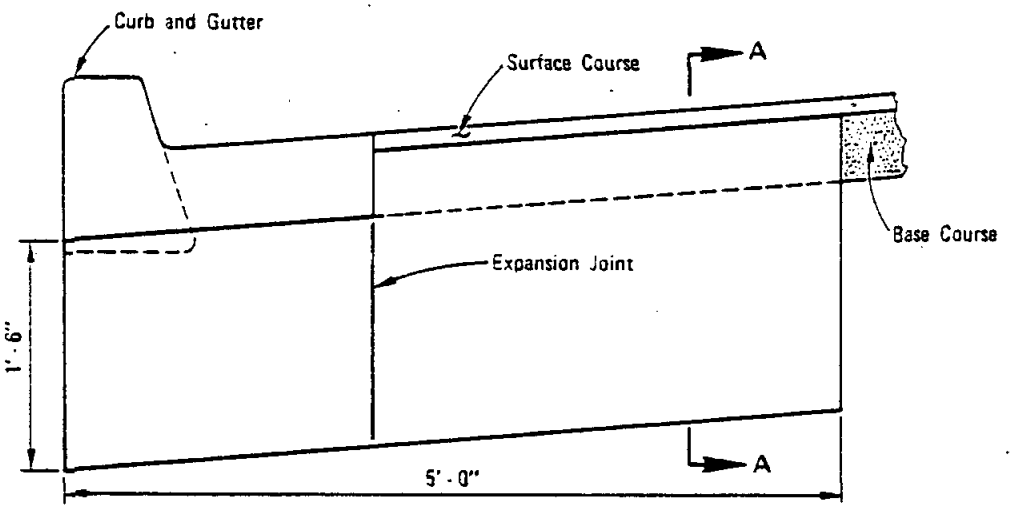

ELEVATION

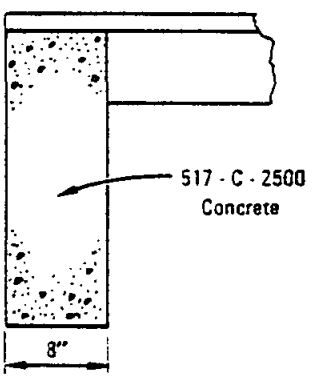

SECTION A–A

LEGEND ON PLANS

RECOMMENDED BY THE SAN DIEGO REGIONAL STANDARDS COMMITTEE Coordinator R.C.E. 19807 Dec. 1975 Date	SAN DIEGO REGIONAL STANDARD DRAWING	Revision	By	Approved	Date
	CUTOFF WALL AT END OF PAVEMENT				
DRAWING NUMBER G-22					

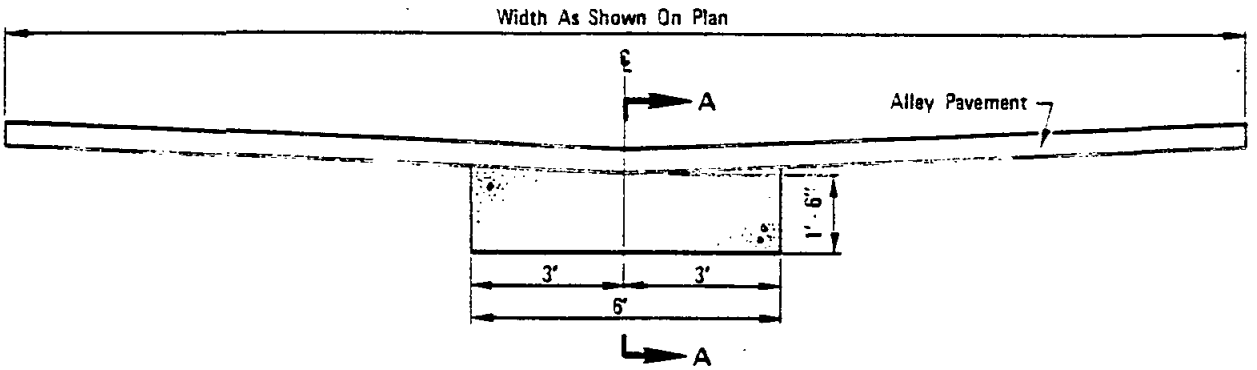

ELEVATION

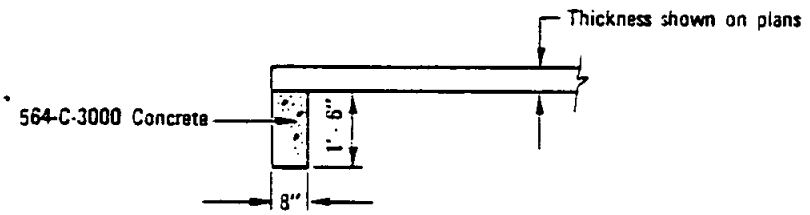

SECTION A–A

LEGEND ON PLANS

Revision	By	Approved	Date

SAN DIEGO REGIONAL STANDARD DRAWING

CUTOFF WALL AT END OF ALLEY PAVEMENT

RECOMMENDED BY THE SAN DIEGO REGIONAL STANDARDS COMMITTEE

Coordinator R.C.E. 19807 — Dec. 1975 Date

DRAWING NUMBER G-23

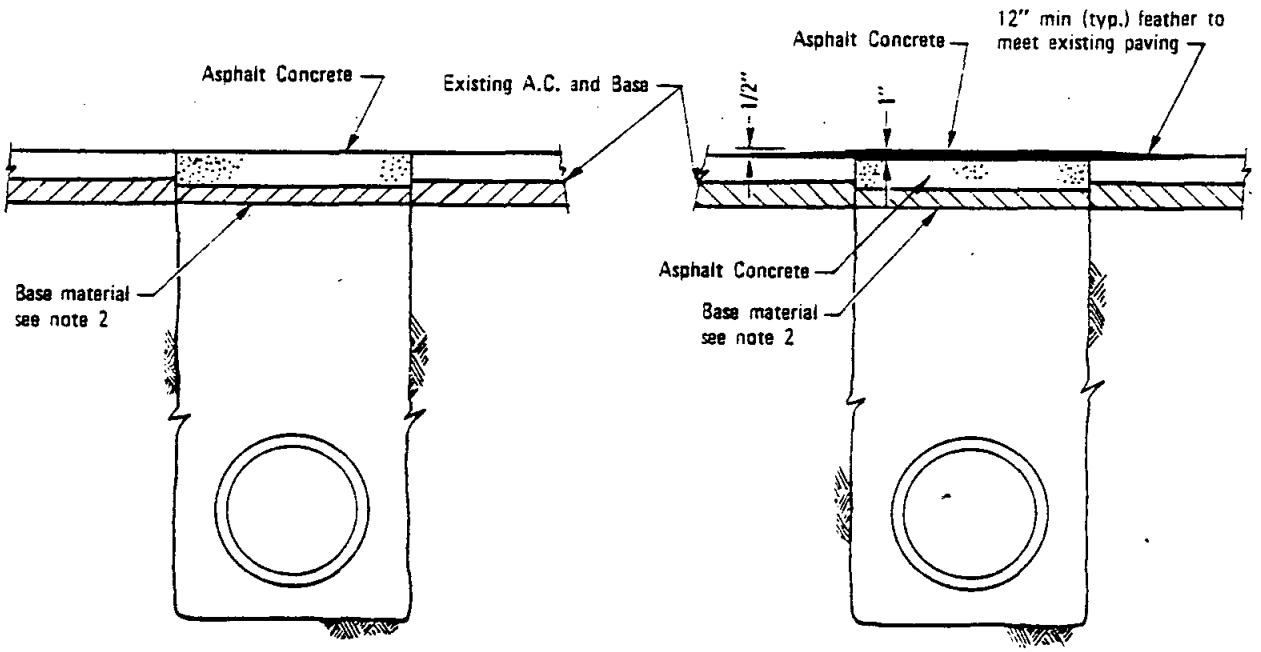

TYPE A

TYPE B

NOTES

1. Existing A.C. shall be cut and removed in such a manner so as not to tear, bulge or displace adjacent pavement. Edges shall be clean and vertical. All cuts shall be parallel or perpendicular to street centerline, when practical.
2. Base material to be replaced to depth of existing base. A.C. may be substituted for base material.
3. A tack coat of asphaltic emulsion or paving asphalt shall be applied to existing A.C. at all contact surfaces, prior to resurfacing.
4. Asphaltic Concrete Resurfacing:
   a) Minimum total thickness shall be one inch greater than existing A.C.
   b) A.C. shall be hot plant mix.
   c) Finish course for Type B resurfacing shall be laid down using a spreader box.
5. All A.C. resurfacing shall be seal coated with an emulsified asphalt and covered with sand. Chip sealing shall be applied as required by Agency.
6. Type B not to be used on lateral crossings.
7. Sloughing of trench under pavement shall be cause for requiring additional pavement and base.

RECOMMENDED BY THE SAN DIEGO REGIONAL STANDARDS COMMITTEE

Dec. 1975

Chairman R.C.E. 19807 Date

DRAWING NUMBER G-24.1

SAN DIEGO REGIONAL STANDARD DRAWING

TRENCH RESURFACING TYPES A & B

Revision	By	Approved	Date
Overcut	TRP	M.B.	10-22

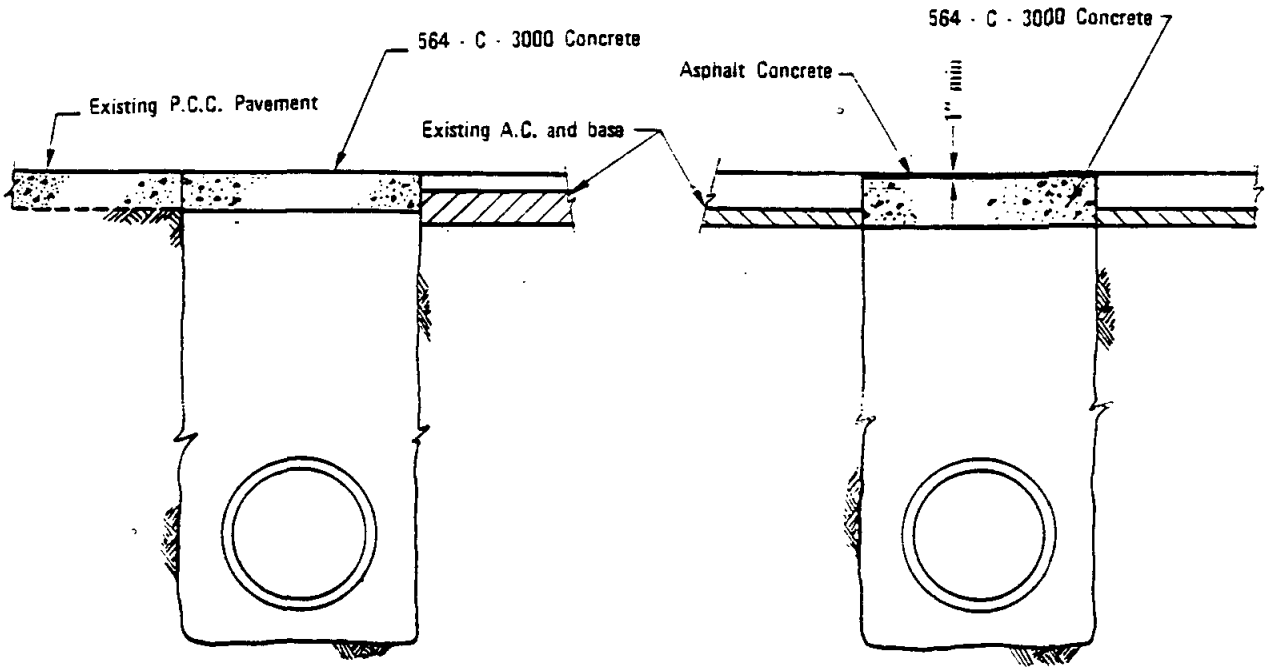

TYPE–C

TYPE–D

GENERAL NOTES

1. Existing A.C. shall be cut and removed in such a manner so as not to tear, bulge or displace adjacent pavement. Edges shall be clean and vertical. All cuts shall be parallel or perpendicular to street centerline, when practical.
2. Sloughing of trench under pavement shall be cause for requiring additional pavement and base.

NOTES TYPE–C

1. Concrete shall be colored black where required to match existing pavement. Method to be specified by Agency.
2. Minimum concrete thickness:
   Alleys and local residential street——————5 inches
   Major streets and highway——————————7 inches
   Trench resurfacing in P.C.C. pavement shall have the above minimum thickness or match the existing concrete thickness plus one inch whichever is greater.

NOTES TYPE–D

1. A.C. shall be hot plant mix.
2. A tack coat of asphaltic emulsion or paving asphalt shall be applied to the existing A.C. at all contact surfaces and to the portland concrete prior to placing the new A.C.
3. A.C. resurfacing shall be seal coated with an emulsified asphalt and covered with sand. Chip sealing shall be applied as required by Agency.

Revision	By	Approved	Date
Overcut	TKP	H.B.	10-87

SAN DIEGO REGIONAL STANDARD DRAWING

TRENCH RESURFACING TYPES C & D

RECOMMENDED BY THE SAN DIEGO REGIONAL STANDARDS COMMITTEE

Coordinator R.C.E. 19807 — Dec. 1975 Date

DRAWING NUMBER G-25.1

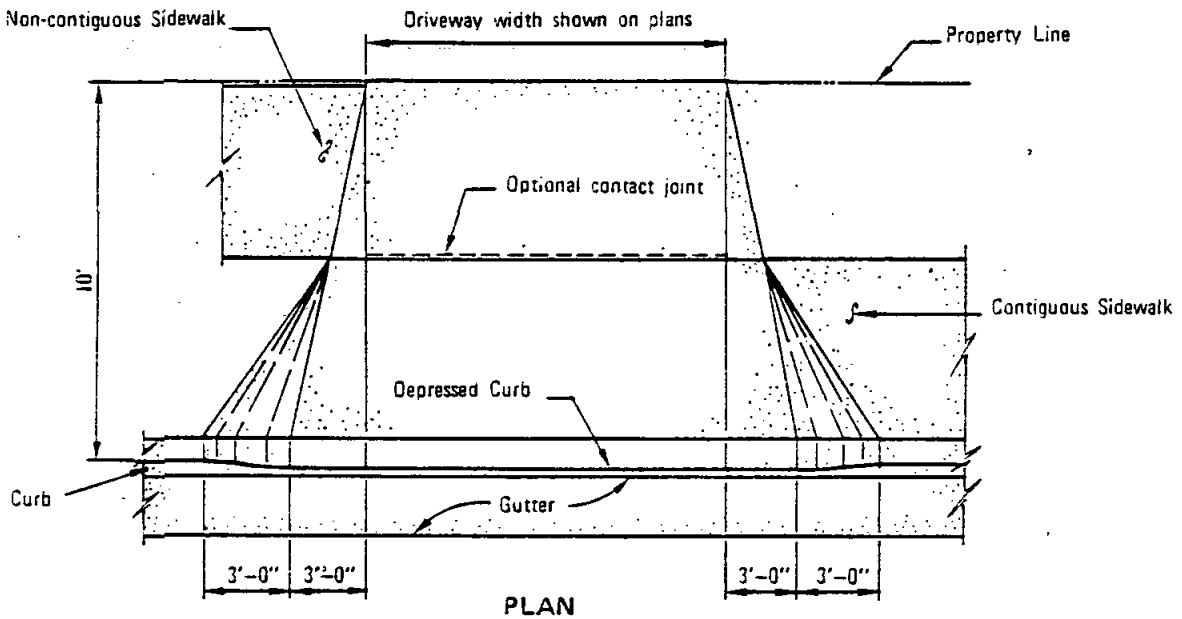

PLAN

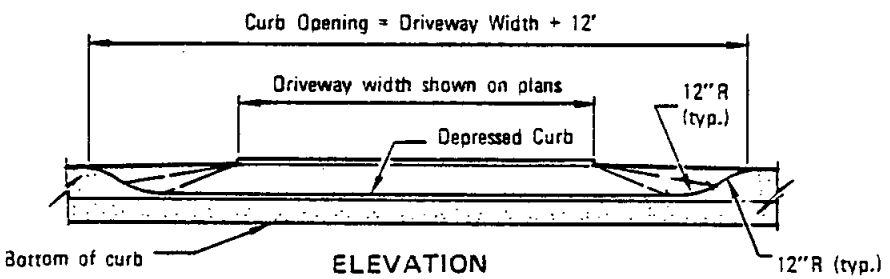

ELEVATION

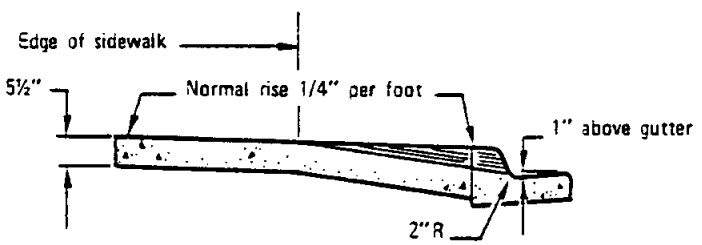

SECTION

NOTES:

1. No concrete shall be placed until forms and subgrade are inspected by the Agency.
2. Concrete shall be 517-C2500.
3. See Standard Drawing G-15 and G-16 for width and location requirements.

LEGEND ON PLANS

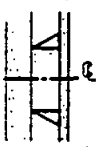

℄ of Alt. Commercial Driveway

RECOMMENDED BY THE SAN DIEGO REGIONAL STANDARDS COMMITTEE Harry R. Felt Oct 1982 Chairman R.C.E. 013768 Date	SAN DIEGO REGIONAL STANDARD DRAWING	Revision	By	Approved	Date
	CONCRETE DRIVEWAY COMMERCIAL ALTERNATE				
DRAWING NUMBER G-26					

SPRINKLER IRRIGATION SYSTEMS

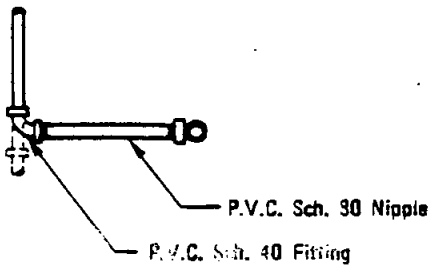

PLAN VIEW

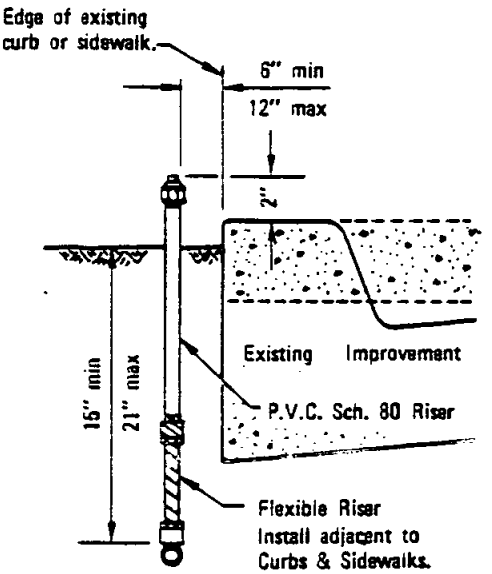

LOCATION OF SPRINKLER HEADS ADJACENT TO EXISTING IMPROVEMENTS

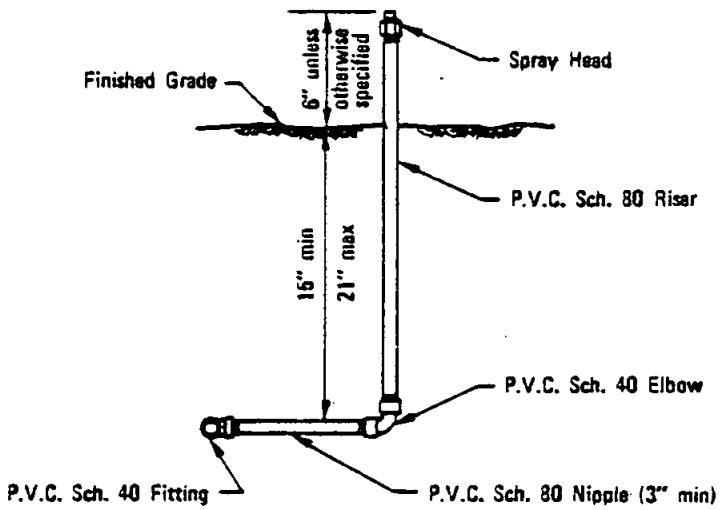

ELEVATION

NOTES

1. Teflon tape, 3/4" wide, shall be used on all threaded connections.
2. Close nipples shall not be used.

LEGEND ON PLANS

Show a number to indicate type head.

Revision	By	Approved	Date

SAN DIEGO REGIONAL STANDARD DRAWING

SHRUBBERY SPRINKLER HEAD FIXED SPRAY TYPE

RECOMMENDED BY THE SAN DIEGO REGIONAL STANDARDS COMMITTEE

Coordinator R.C.E. 19807 Date Dec. 1975

DRAWING NUMBER I-1

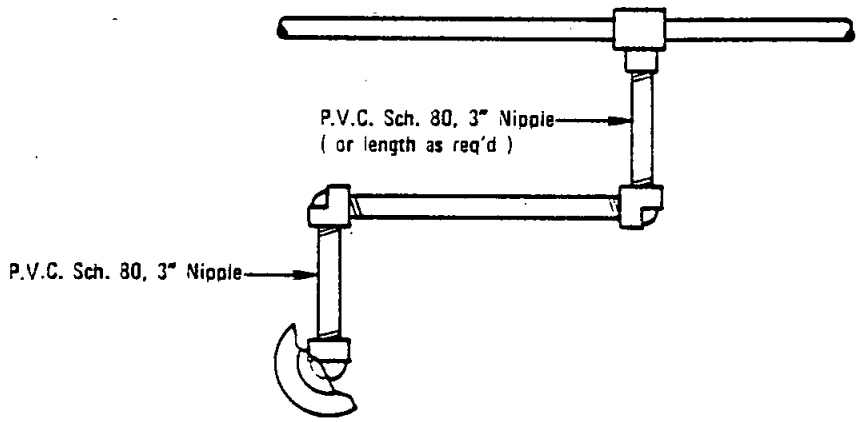

PLAN

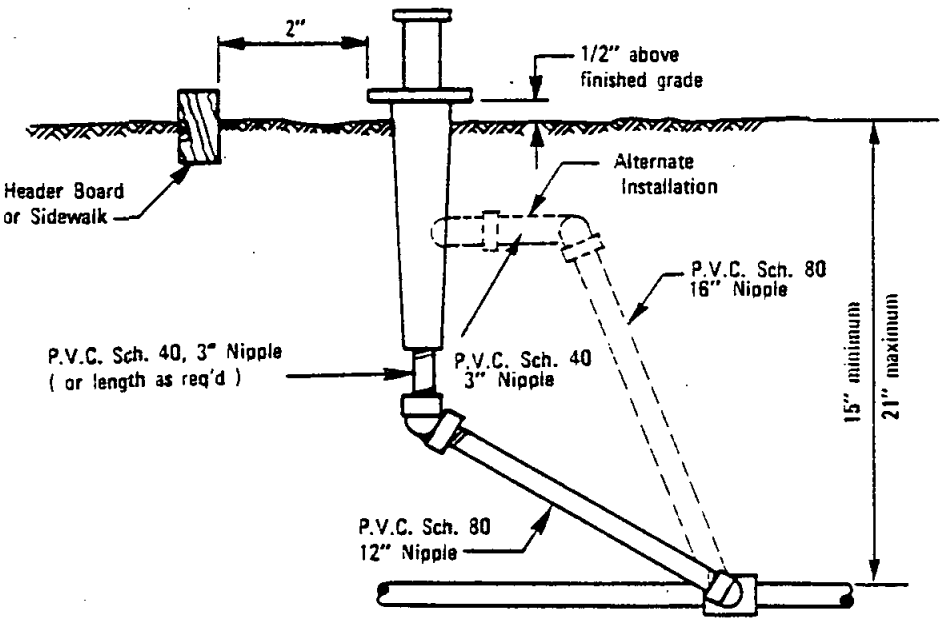

ELEVATION

NOTES

1. All fittings shall be P.V.C. Sch. 40.
2. Teflon tape, 3/4" wide, shall be used on all threaded connections.
3. Short nipples shall not be used.

LEGEND ON PLANS

Show a number to indicate type head

RECOMMENDED BY THE SAN DIEGO REGIONAL STANDARDS COMMITTEE Coordinator R.C.E. 19607 — Dec. 1975 Date	SAN DIEGO REGIONAL STANDARD DRAWING	Revision	By	Approved	Date
		Alt. Instl.	TRP	M. B.	10-82
DRAWING NUMBER I-2.1	SPRINKLER HEAD POP UP SPRAY TYPE				

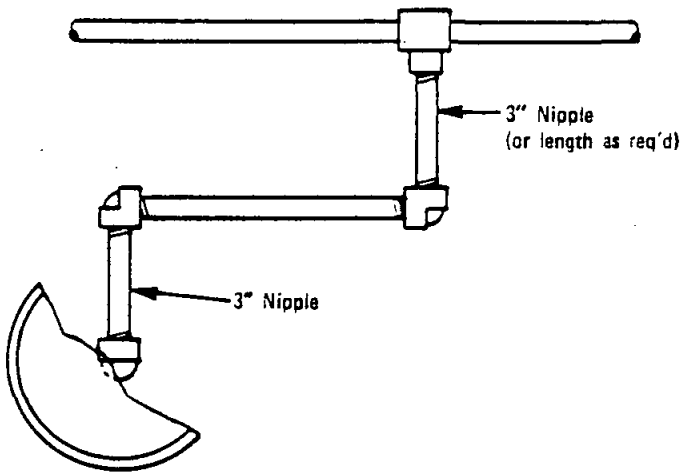

PLAN

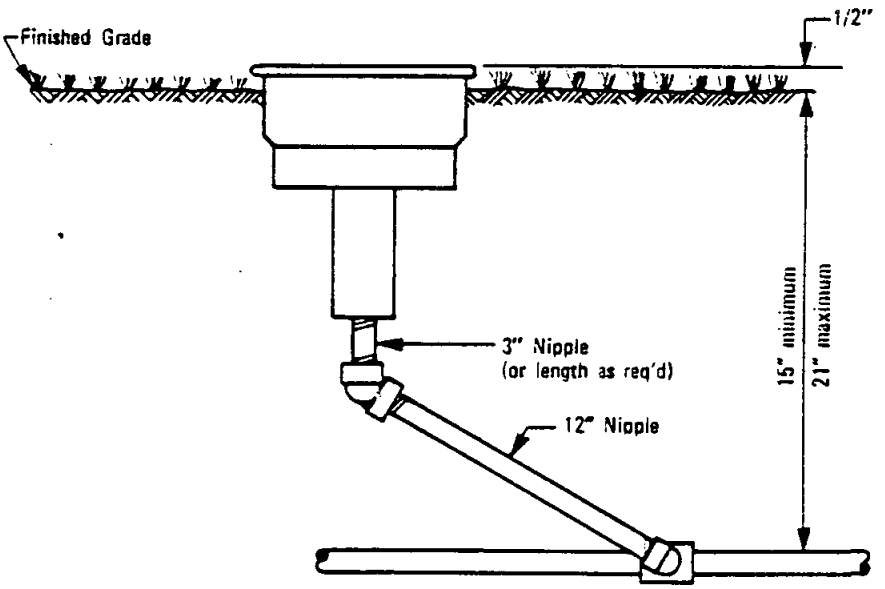

ELEVATION

NOTES

1. All fittings shall be P.V.C. Sch. 40.
2. All nipples shall be P.V.C. Sch. 80.
3. Teflon tape, 3/4" wide, shall be used on all threaded connections.
4. Short nipples shall not be used.

LEGEND ON PLANS

Show a number to indicate type head

Revision	By	Approved	Date

SAN DIEGO REGIONAL STANDARD DRAWING

LAWN SPRINKLER HEAD POP UP ROTARY (WITH SWING JOINT)

RECOMMENDED BY THE SAN DIEGO REGIONAL STANDARDS COMMITTEE

Coordinator R.C.E. 15807 Date Dec. 1975

DRAWING NUMBER I-3

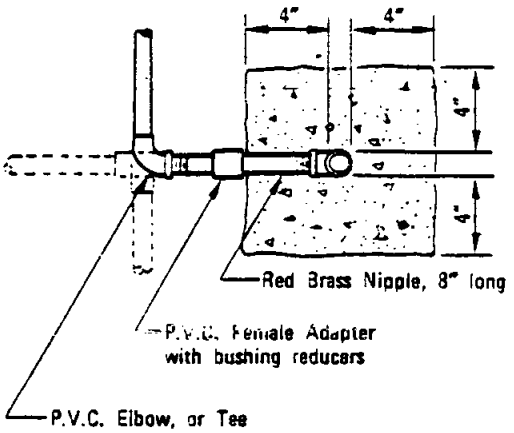

PLAN

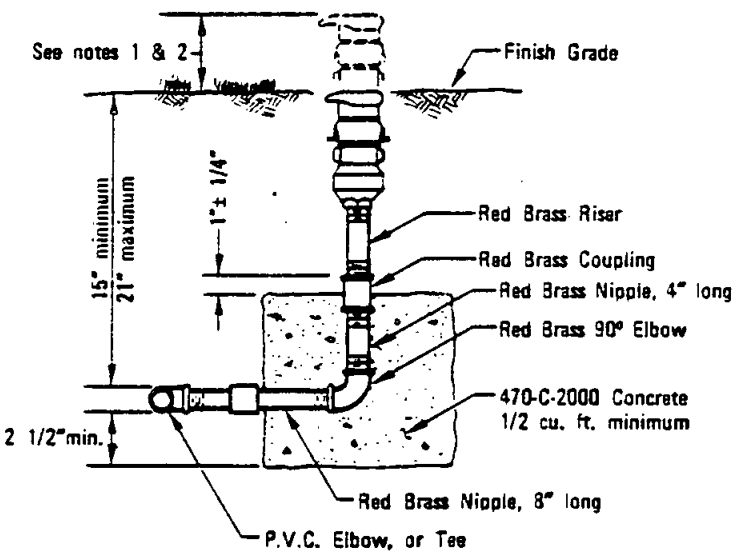

ELEVATION

COUPLER KEY-
SINGLE LUG

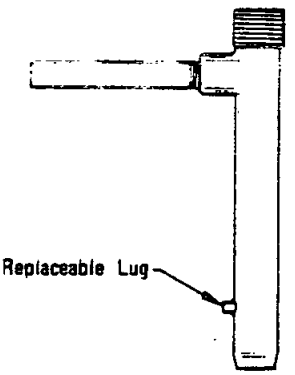

KEY FOR
LOCK TOP

NOTES
1. Quick coupling valves in lawn areas shall be set to grade.
2. Quick coupling valves in shrub areas shall be set 2 inches above grade.
3. Dimensions of concrete anchors are minimum.
4. Close nipples shall not be used.

LEGEND ON PLANS

Q.C.V. ◉

Revision	By	Approved	Date
Note 2	TRP	M.B.	10-72

SAN DIEGO REGIONAL STANDARD DRAWING

QUICK COUPLING VALVE

RECOMMENDED BY THE SAN DIEGO REGIONAL STANDARDS COMMITTEE

Coordinator R.C.E. 19807 — Dec. 1975 Date

DRAWING NUMBER I-5.1

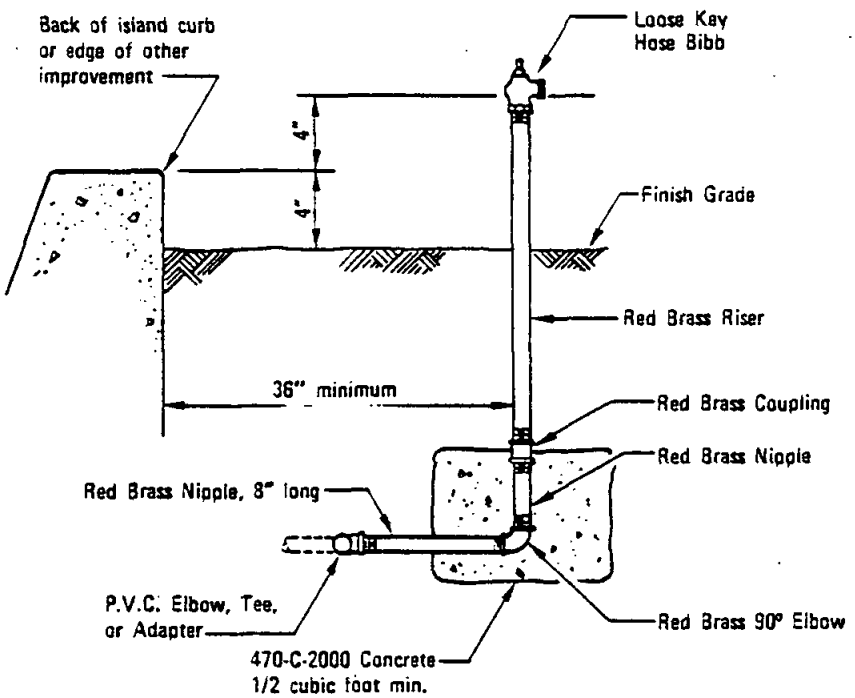

NOTES

1. Hose bibb shall be loose key operated, all brass or bronze construction, angle pattern with removable bonnet and stem assembly, replaceable seat washers and stem packing glands.
2. Unless otherwise specified, the hose connection thread shall be 3/4" male hose thread (pacific coast), and the riser opening thread shall be 3/4" female I.P.S. Discharge opening shall be 90° to riser opening.

LEGEND ON PLANS

RECOMMENDED BY THE SAN DIEGO REGIONAL STANDARDS COMMITTEE Allan A. Kershaw Dec. 1975 Coordinator R.C.E. 19807 Date	SAN DIEGO REGIONAL STANDARD DRAWING	Revision	By	Approved	Date
		Set Back	RP	M.S.	10-82
DRAWING NUMBER I-6.1	HOSE BIBB (GARDEN VALVE)				

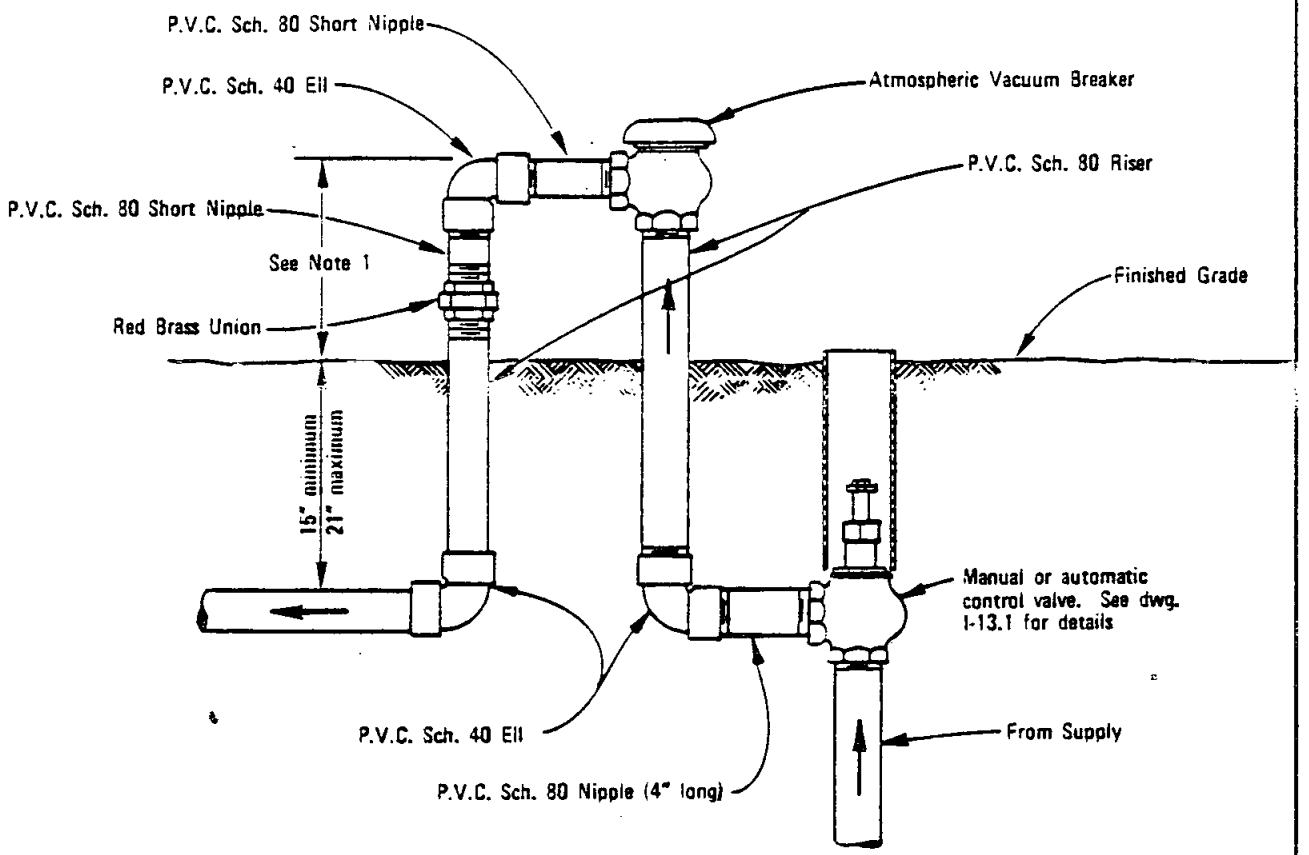

NOTES

1. Atmospheric vacuum breakers shall be installed approximately 6" above the finished grade and above a sufficient number of sprinkler heads closest to the vacuum breaker so that at no time will it be subjected to back pressure or drainage.
2. Close nipples shall not be used.
3. All fittings, including the atmospheric vacuum breaker, shall not be of smaller size than the valve.
4. Teflon tape, 3/4" wide, shall be used on all threaded connections.
5. For use on lines 2 inches and smaller.

LEGEND ON PLANS

Revision	By	Approved	Date
Union	TRP	M.B.	10-82

SAN DIEGO REGIONAL STANDARD DRAWING

BACKFLOW PREVENTER ATMOSPHERIC VACUUM BREAKER (2" & SMALLER)

RECOMMENDED BY THE SAN DIEGO REGIONAL STANDARDS COMMITTEE

Coordinator R.C.E. 19607 — Dec. 1975 Date

DRAWING NUMBER I-7.1

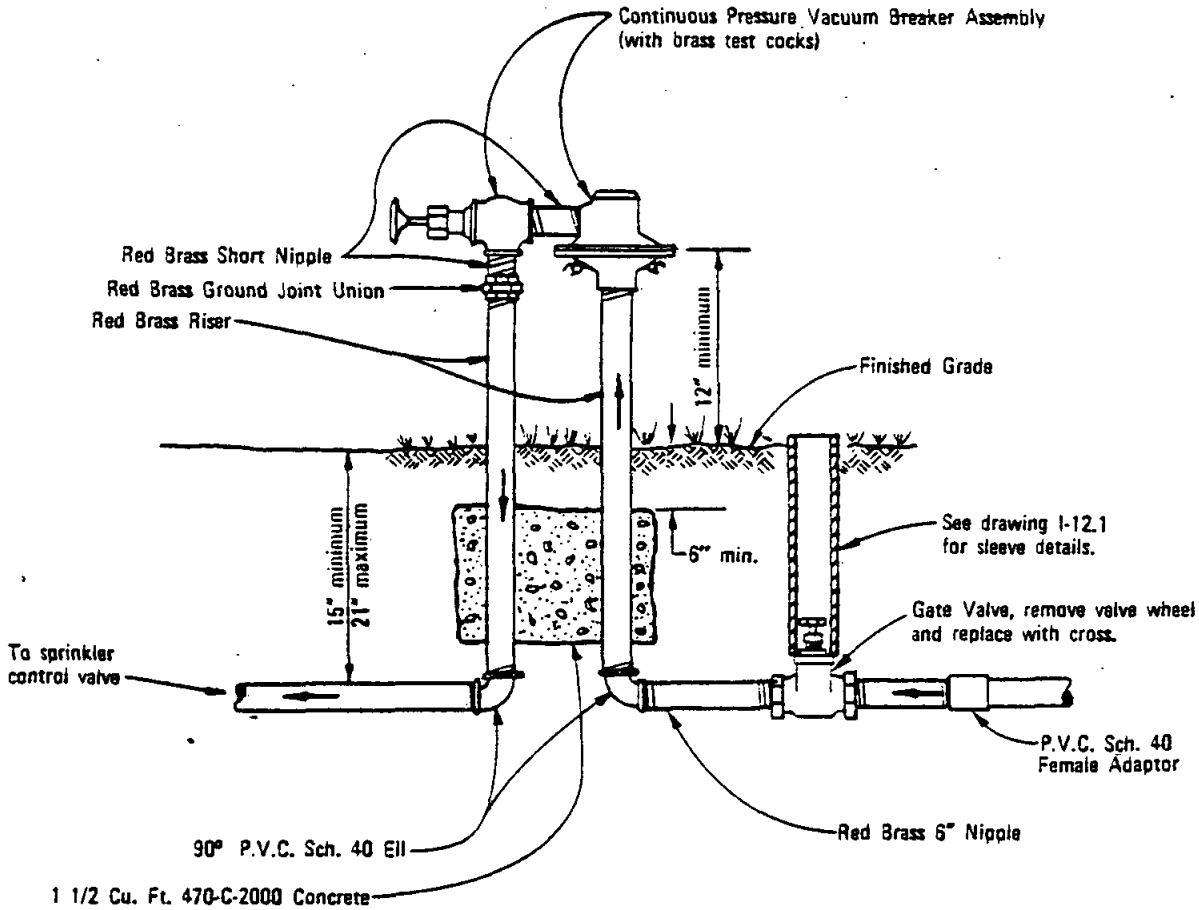

NOTES

1. Continuous pressure vacuum breakers shall be installed approximately 12 inches above finished grade and at the highest point in the line.
2. Continuous pressure vacuum breakers shall not be subjected to back pressure or drainage.
3. Teflon tape 3/4" wide shall be used on all threaded connections.
4. Close nipples shall not be used.

LEGEND ON PLANS

Ⓥ⊗

RECOMMENDED BY THE SAN DIEGO REGIONAL STANDARDS COMMITTEE	SAN DIEGO REGIONAL STANDARD DRAWING	Revision	By	Approved	Date
Coordinator R.C.E. 13807 Dec. 1975 Date	BACKFLOW PREVENTER · CONTINUOUS PRESS. VAC. BREAKER ASSY. (2" & SMALLER)	Note 1		D.S.	7-79
		Reference	TRP	M.B.	10-82
DRAWING NUMBER I-8.1					

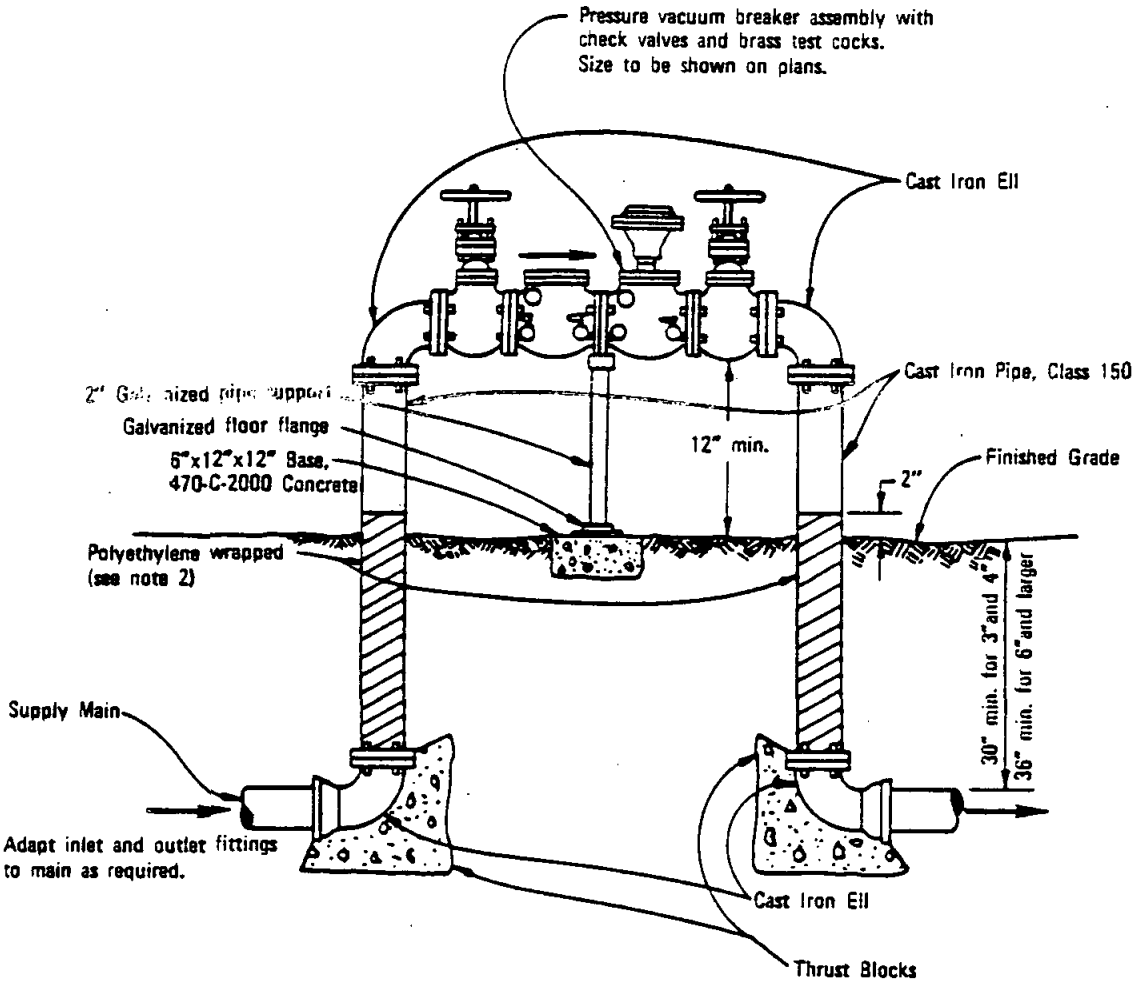

NOTES

1. All fittings on assembly 3" and larger shall be flanged.
2. Cast iron pipe shall be polyethylene wrapped with a 2" wide plastic backed adhesive tape. Use ½" overlap.
3. Cast iron pipe and fittings shall be cement mortar lined.
4. Pressure vacuum breaker assembly shall be installed above a sufficient number of sprinkler heads closest to the vacuum breaker assembly so that at no time will it be subjected to back pressure or drainage.
5. All exposed cast iron shall be painted with one coat of red lead and two finish coats of exterior enamel.
6. All fittings 2" and smaller shall be red brass.

LEGEND ON PLANS

Revision	By	Approved	Date
Note 1,6	TRP	M.B.	10-82

SAN DIEGO REGIONAL STANDARD DRAWING

BACKFLOW PREVENTER REDUCED PRESS. VAC. BREAKER ASSEMBLY

RECOMMENDED BY THE SAN DIEGO REGIONAL STANDARDS COMMITTEE

Coordinator R.C.E. 19807 — Dec. 1975 Date

DRAWING NUMBER 1-9.1

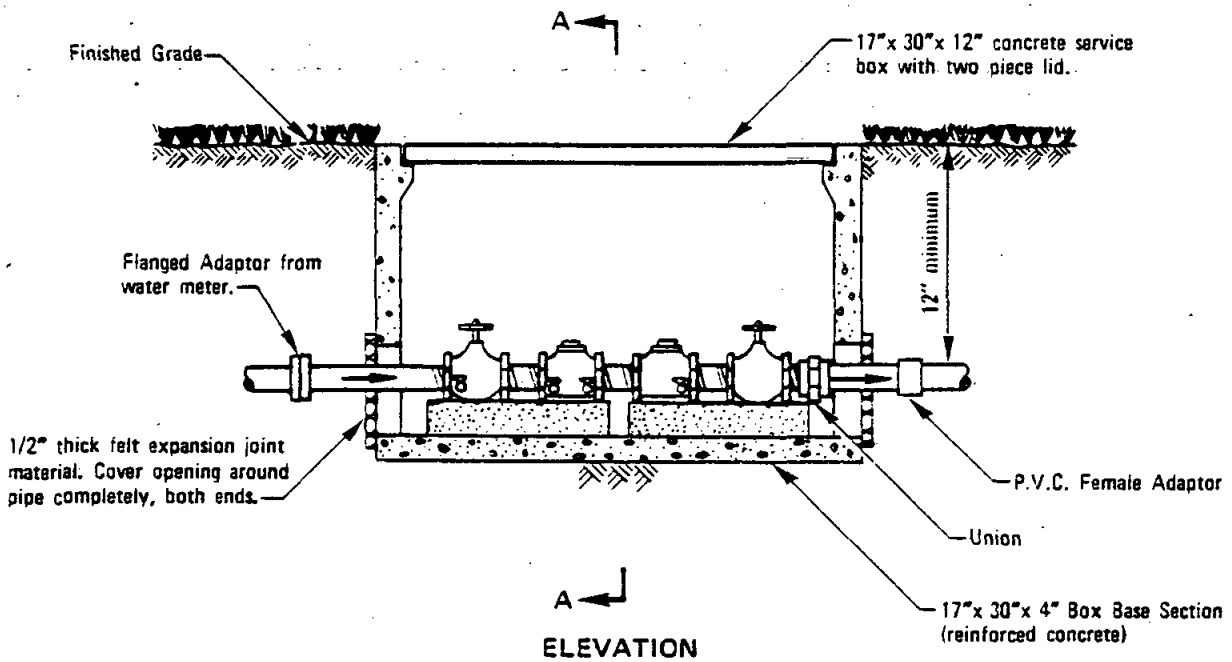

ELEVATION

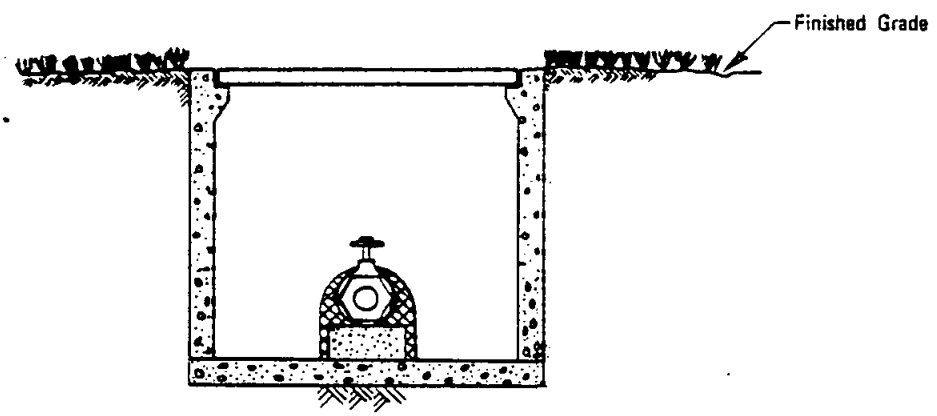

SECTION A–A

NOTES

1. Not for use in traffic areas.
2. All check valves shall have test cocks.
3. Use concrete block supports (2 req'd) when needed to match shallow meter installation.
4. All nipples and pipe fittings shall be red brass.
5. Gate valve handwheel shall be red brass or bronze.

LEGEND ON PLANS

RECOMMENDED BY THE SAN DIEGO REGIONAL STANDARDS COMMITTEE

Coordinator R.C.E. 19807 — Dec. 1975 Date

DRAWING NUMBER 1-10.1

SAN DIEGO REGIONAL STANDARD DRAWING

BACKFLOW PREVENTER DOUBLE CHECK VALVE ASSEMBLY (2" & SMALLER)

Revision	By	Approved	Date
Title	TRP	M.B.	10-82

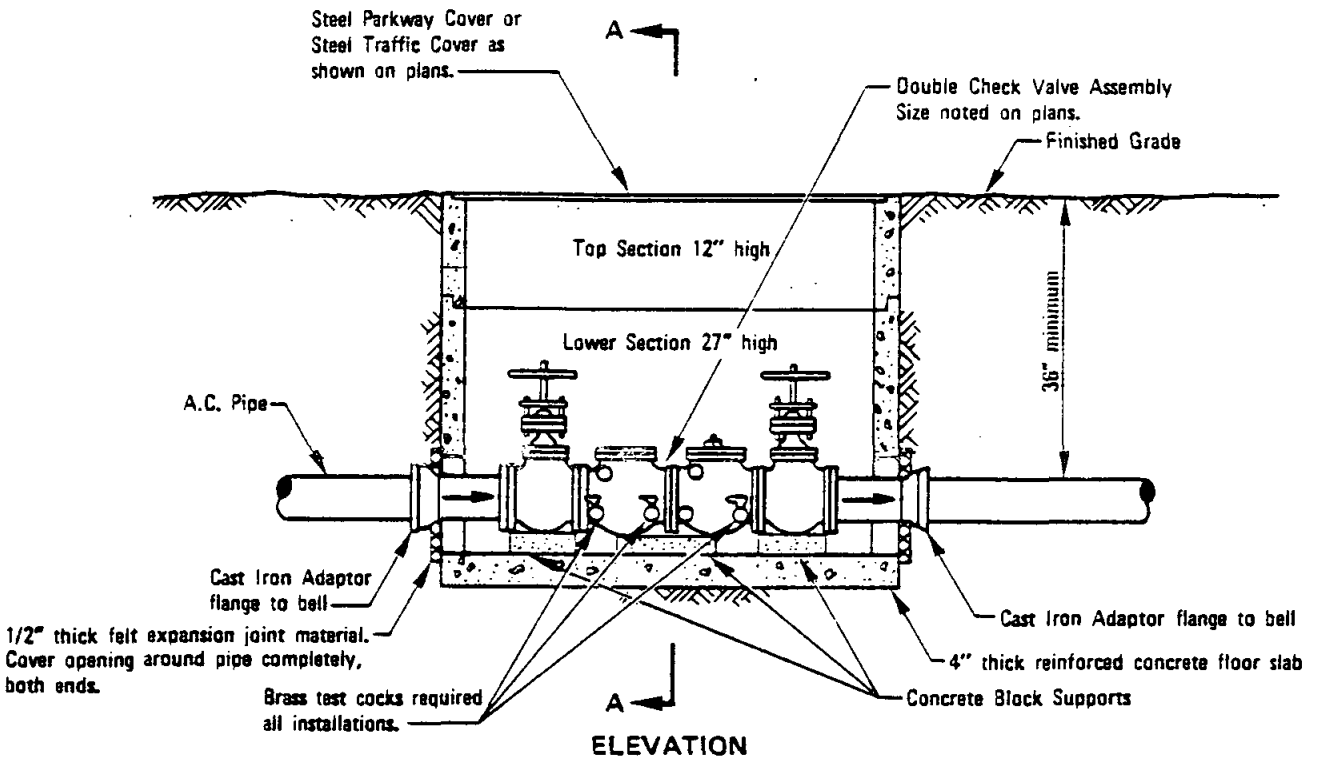

ELEVATION

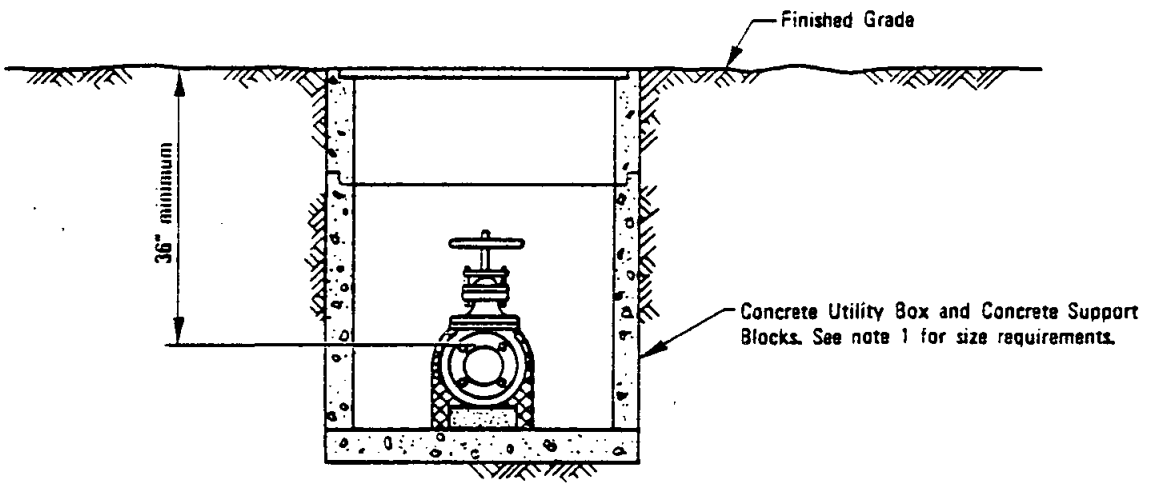

SECTION A–A

NOTES

1. 3" and 4" pipe: 2'-6" x 4'-0" utility box with 4" walls.
   6" and 8" pipe: 2'-6" x 6'-0" utility box with 4" walls.
2. All exposed cast iron shall be painted with one coat of red lead and two finish coats of exterior enamel.

LEGEND ON PLANS

Revision	By	Approved	Date
Title	TRP	M.B.	10-32

SAN DIEGO REGIONAL STANDARD DRAWING

BACKFLOW PREVENTER · DOUBLE CHECK VALVE ASSY. (3" & LARGER)

RECOMMENDED BY THE SAN DIEGO REGIONAL STANDARDS COMMITTEE

Coordinator R.C.E. 19807 — Dec. 1975 Date

DRAWING NUMBER I-11.1

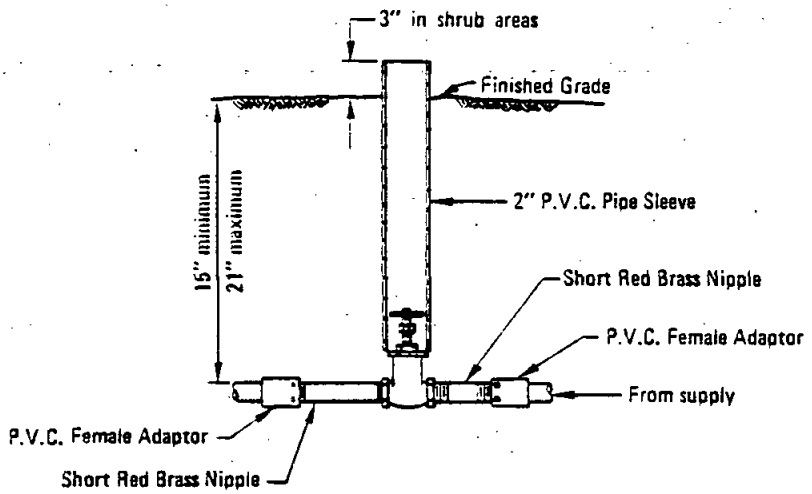

STANDARD INSTALLATION

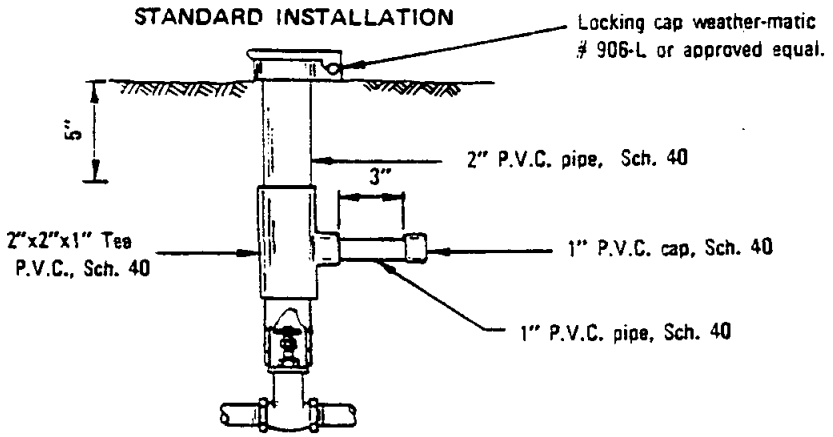

ALTERNATE PIPE
SLEEVE INSTALLATION

NOTES

1. All valves shall be furnished with a standard manual control valve bronze cross handle.
2. All valves shall be installed within 12" of the water main, unless otherwise shown on the plans.
3. Close nipples shall not be used.

LEGEND ON PLANS

⊗ G. V.

RECOMMENDED BY THE SAN DIEGO REGIONAL STANDARDS COMMITTEE Coordinator R.C.E. 19807 Dec. 1975 Date	SAN DIEGO REGIONAL STANDARD DRAWING	Revision	By	Approved	Date
		Union		M.B.	10-82
DRAWING NUMBER 1-12.1	GATE VALVE (2" AND SMALLER)				

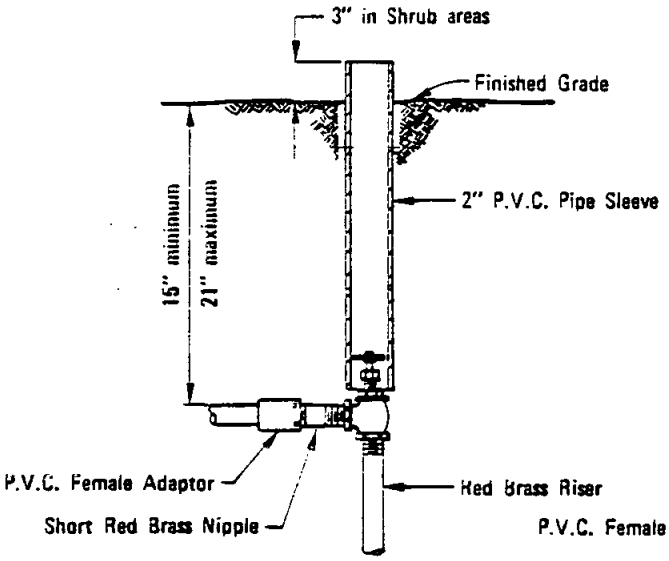

ANGLE VALVE

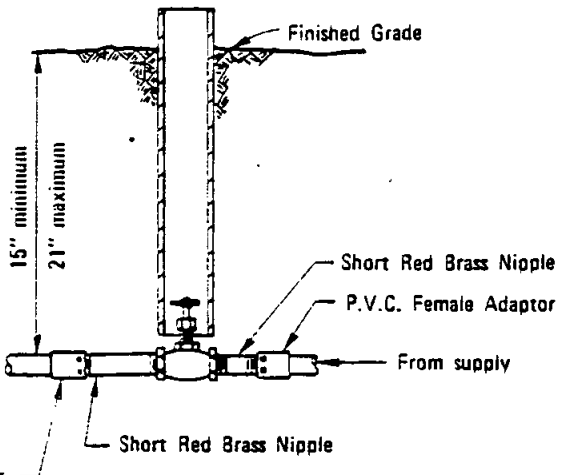

GLOBE VALVE
(special cases only)

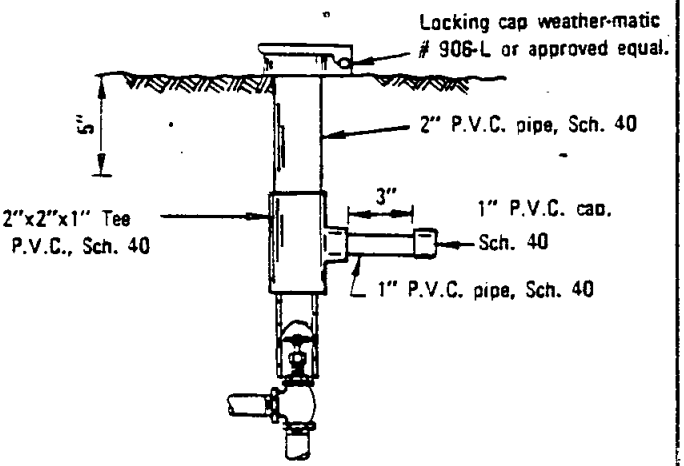

ALTERNATE PIPE
SLEEVE INSTALLATION

NOTES

1. All Manual Valves shall be furnished with a standard manual control valve bronze cross handle.
2. All valves shall be installed with 12" of the water main, unless otherwise shown on the plans.
3. All Manual Valves shall be furnished with a removable bonnet and packing gland nut.
4. Close Nipples shall not be used.

LEGEND ON PLANS

M.C.V.

Revision	By	Approved	Date
Union	TRP	M.B.	10-82

SAN DIEGO REGIONAL STANDARD DRAWING

MANUAL VALVES

RECOMMENDED BY THE SAN DIEGO REGIONAL STANDARDS COMMITTEE

Coordinator R.C.E. 19807 — Dec. 1975 Date

DRAWING NUMBER I-13.1

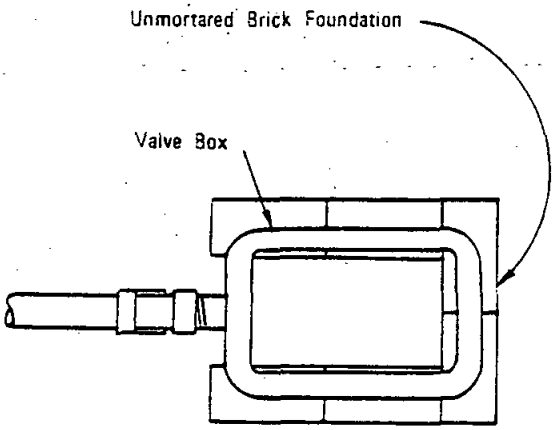

PLAN

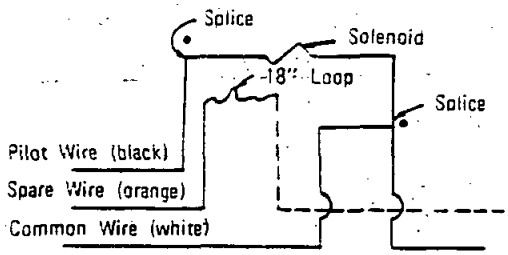

TYPICAL ELEMENTARY DIAGRAM FOR WIRING ELECTRICAL REMOTE CONTROL VALVE

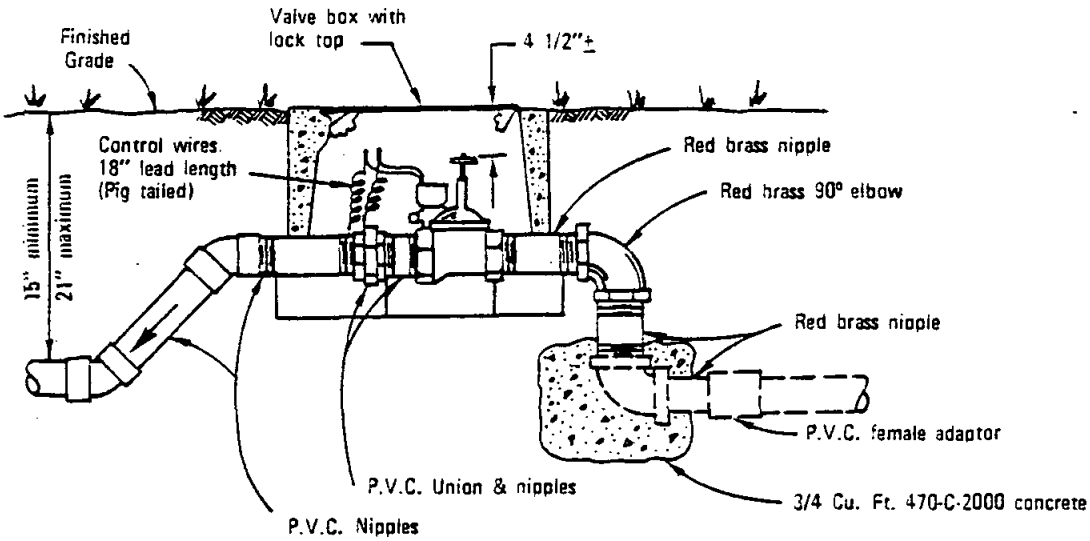

ELEVATION

NOTES

1. No splicing shall be made outside of the valve box except that made in a pull-box. See Standard Drawing I-15 for splice details.
2. Close nipples shall not be used.
3. Spare wires terminating in valve boxes shall have their ends insulated, the same as for a splice.
4. When two or more valves are installed in the same location, they shall be in manifold using red brass fittings, with a gate valve installed at the start of the manifold.
5. All valves shall be installed with a union on the downstream side of the valve. The union shall be P.V.C.

LEGEND ON PLANS
▼ R.C.V.

RECOMMENDED BY THE SAN DIEGO REGIONAL STANDARDS COMMITTEE Dec. 1975 Chairman R.C.E. 10807 Date	SAN DIEGO REGIONAL STANDARD DRAWING	Revision	By	Approved	Date
		Valve	TRP	M.B.	10-82
DRAWING NUMBER I-14.1	REMOTE CONTROL VALVE				

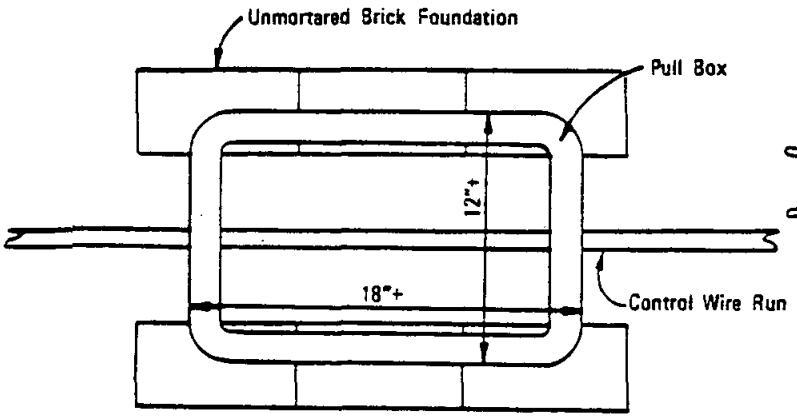

PLAN VIEW

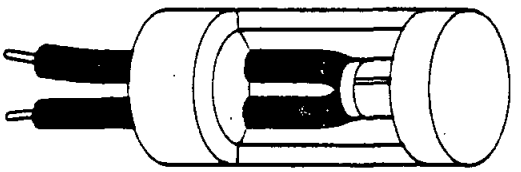

PEN–TITE WIRE CONNECTOR

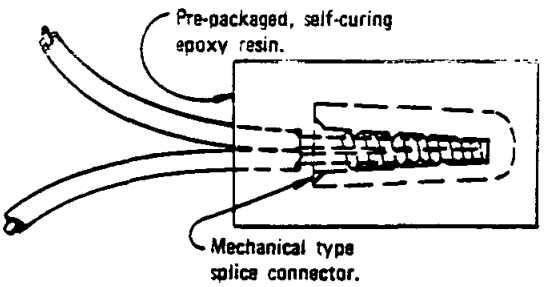

SCREW TYPE CONNECTOR

SPLICE DETAILS

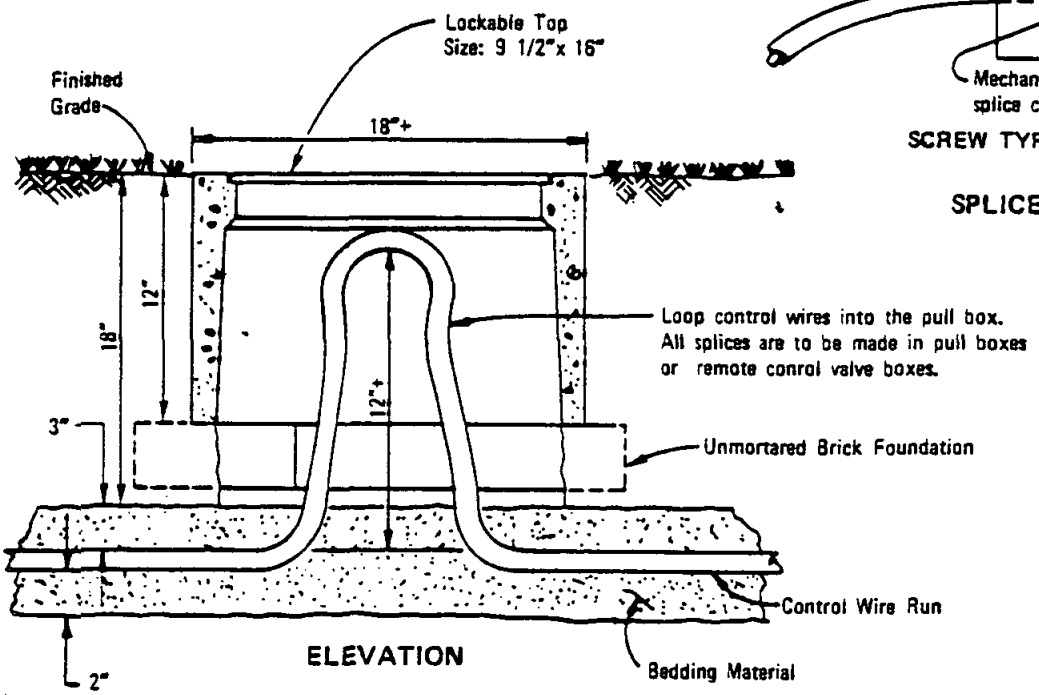

ELEVATION

NOTES

1. Install pull boxes as shown on plans.
2. At junctions where runs combine, splice common ground in pull box.
3. Pull box cover shall be permanently marked "ELECTRIC".
4. Conductors for each controller clock shall be harnessed separately and at sufficient intervals to maintain a definite bundle.
5. All splices shall be made with a properly set mechanical splice connector entirely enclosed in self-curing epoxy resin and shall be completely water-proof.
6. All spare wire ends shall be insulated in the same manner as wire splices.

LEGEND ON PLANS

---□--- P.B.

Revision	By	Approved	Date

SAN DIEGO REGIONAL STANDARD DRAWING

ELECTRICAL PULL BOX FOR DIRECT BURIAL CONTROL WIRES AND SPLICE DETAILS

RECOMMENDED BY THE SAN DIEGO REGIONAL STANDARDS COMMITTEE

Coordinator R.C.E. 19807 Dec. 1975 Date

DRAWING NUMBER I-15

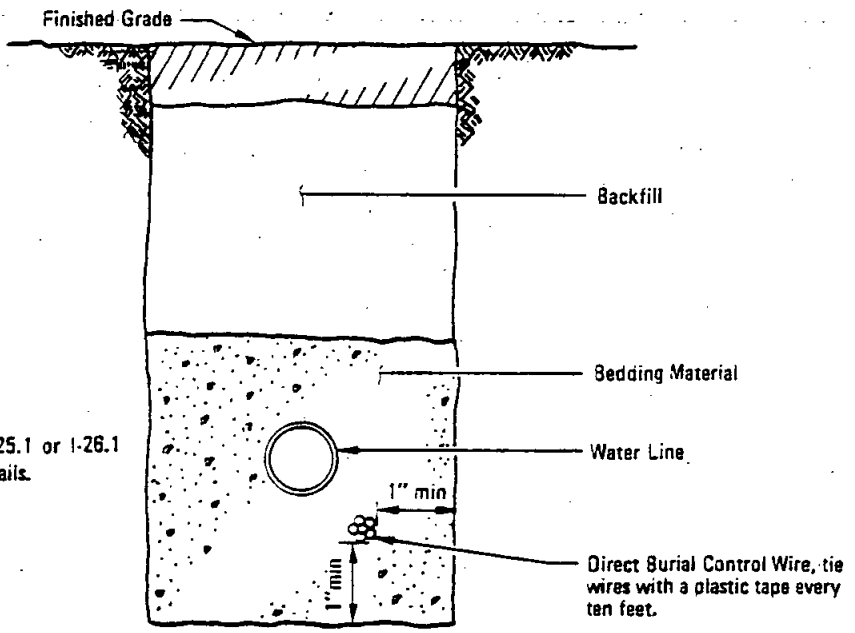

NOTE
See Standard Drawing I-25.1 or I-26.1 for water line trench details.

NORMAL LOCATIONS OF CONTROL WIRES

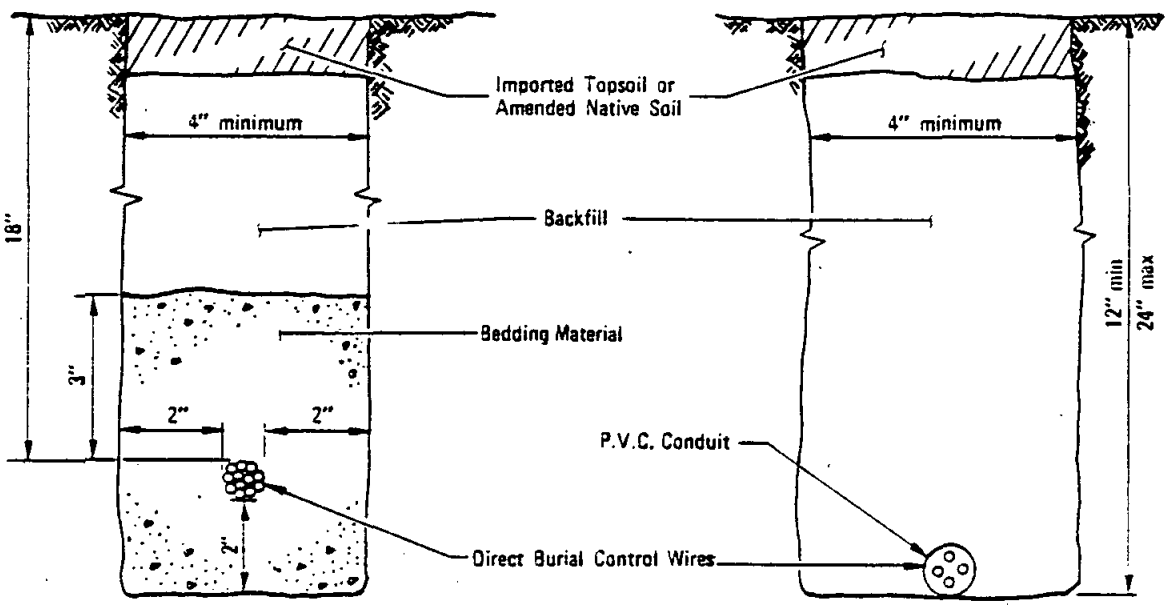

ALTERNATE LOCATION OF CONTROL WIRES

RECOMMENDED BY THE SAN DIEGO REGIONAL STANDARDS COMMITTEE Dec. 1975 Coordinator R.C.E. 19807 Date	SAN DIEGO REGIONAL STANDARD DRAWING	Revision	By	Approved	Date
		Reference	TRP	M.B.	10-72
DRAWING NUMBER I-16.1	DIRECT BURIAL CONTROL WIRE				

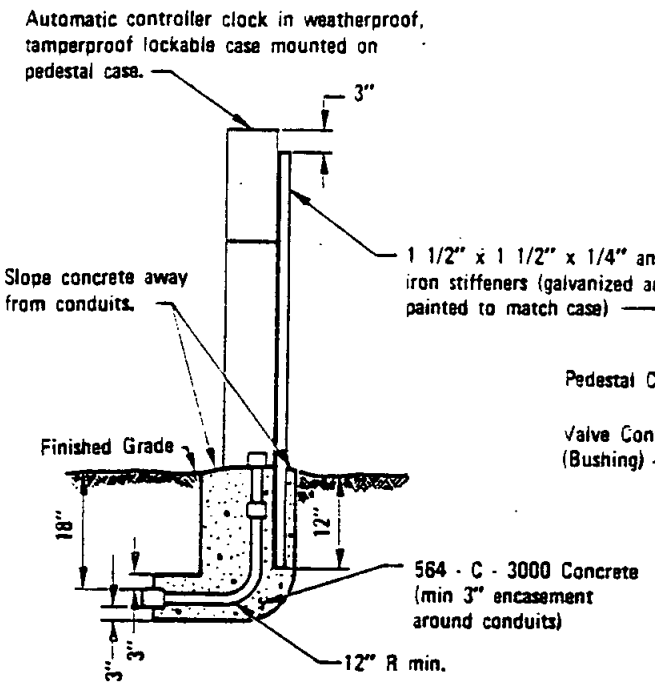

SIDE VIEW

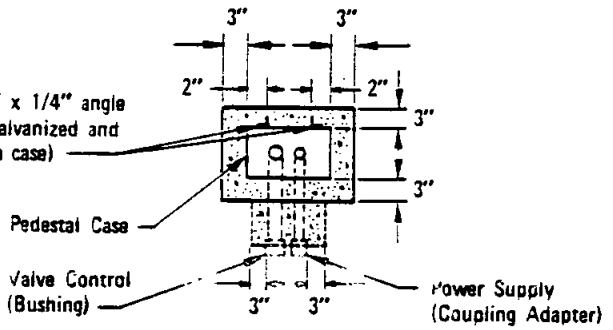

PLAN VIEW

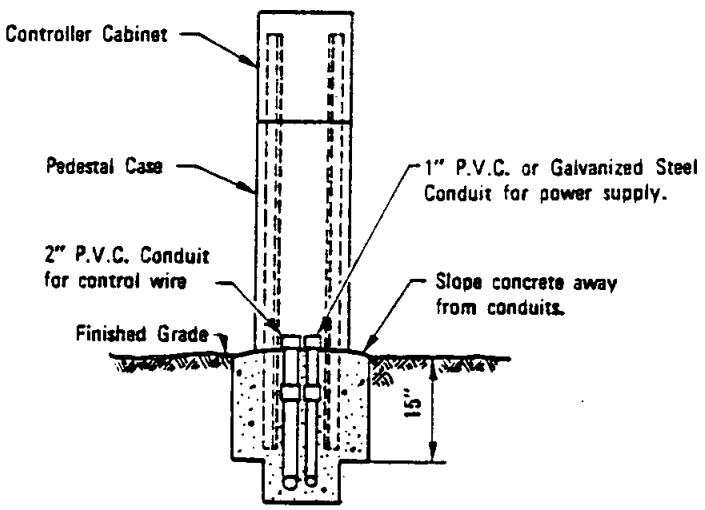

ELEVATION

NOTES

1. Where two or more controllers are mounted on a common concrete base, a minimum of three inches shall be left between controller cabinets.
2. Anchor controller pedestal to base as required by manufacturer.
3. Make all electrical connections inside controller cabinet.
4. For location of supply conduit and conductors, see electrical plans.
5. Stiffeners shall be fastened to controller and pedestal cases by 3/16" x 3/4" O.N. cadium plated stove bolts not more than 12" on center (minimum 6 bolts per stiffener).
6. Controller shall be grounded at power supply by ground wire.

LEGEND ON PLANS

Revision	By	Approved	Date
Conduit	TRP	M.B.	10-82

SAN DIEGO REGIONAL STANDARD DRAWING

IRRIGATION SYSTEMS ELECTRIC CONTROLLER CLOCK PEDESTAL MOUNTING

RECOMMENDED BY THE SAN DIEGO REGIONAL STANDARDS COMMITTEE

Coordinator R.C.E. 19807 — Dec. 1975 Date

DRAWING NUMBER I-17.1

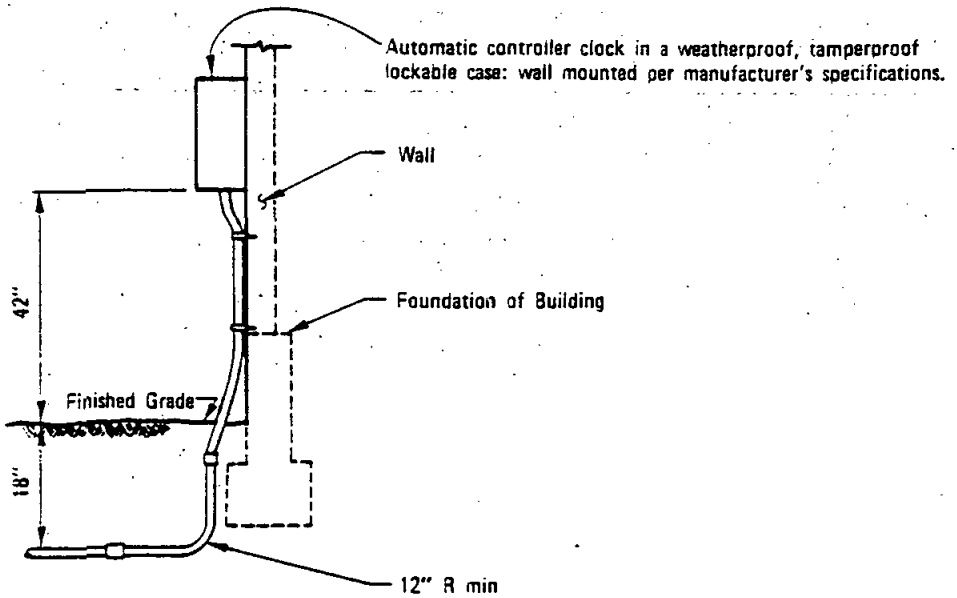

SIDE VIEW

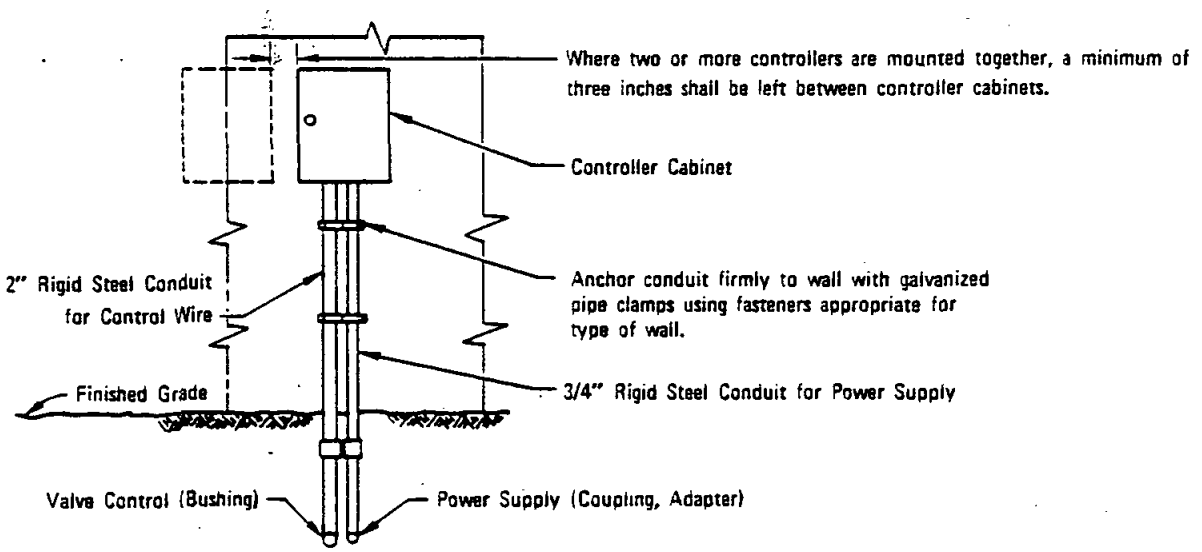

ELEVATION

NOTES

1. For location of supply conduit and conductor, refer to the plans.
2. Controller shall be grounded at power supply by ground wire.
3. Make all electrical connections inside controller cabinet.

LEGEND ON PLANS

RECOMMENDED BY THE SAN DIEGO REGIONAL STANDARDS COMMITTEE	SAN DIEGO REGIONAL STANDARD DRAWING	Revision	By	Approved	Date
Coordinator R.C.E. 15807 Date Oct. 1975	IRRIGATION SYSTEMS ELECTRIC CONTROLLER CLOCK WALL MOUNTING				
DRAWING NUMBER I-18					

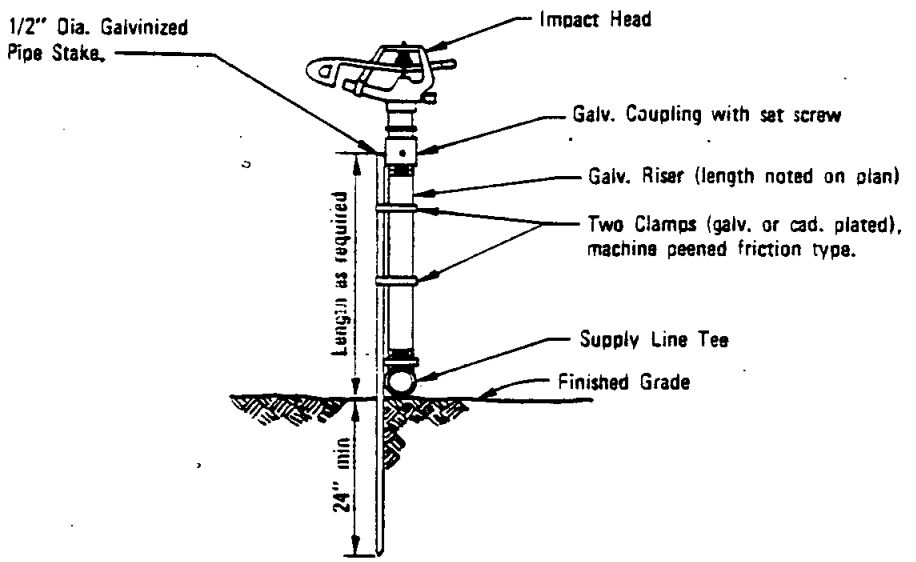

LEVEL INSTALLATION

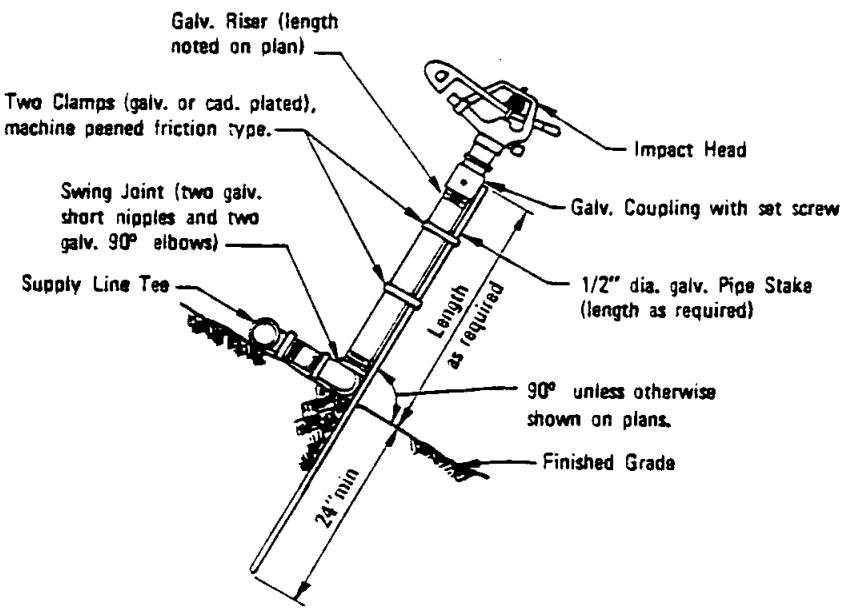

SLOPE INSTALLATION

LEGEND ON PLANS

Show a number to indicate type head

Revision	By	Approved	Date
Stake	TRP	M.B.	10-82

SAN DIEGO REGIONAL STANDARD DRAWING

IMPACT HEAD ABOVE GROUND PIPE INSTALLATIONS

RECOMMENDED BY THE SAN DIEGO REGIONAL STANDARDS COMMITTEE

Coordinator R.C.E. 19807 Date Dec. 1975

DRAWING NUMBER 1-19.1

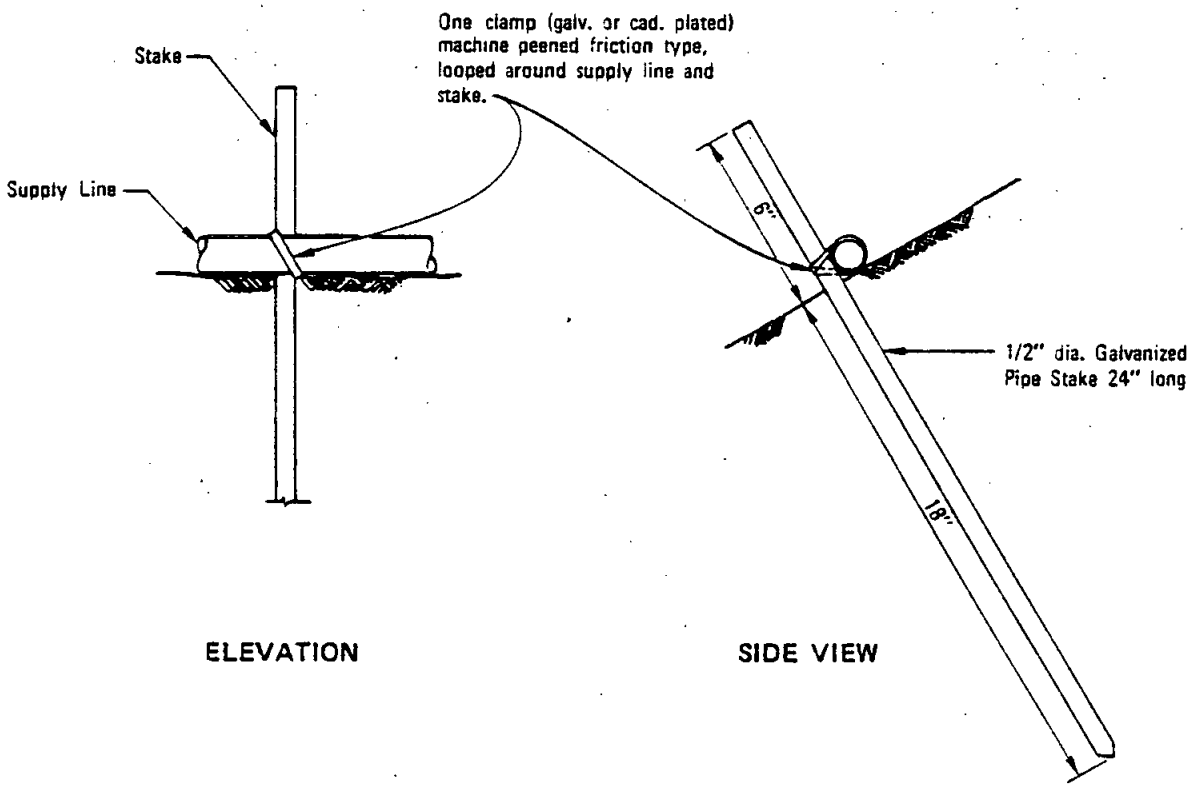

NOTE

Stake shall be placed no greater than 15' apart and at each riser.

RECOMMENDED BY THE SAN DIEGO REGIONAL STANDARDS COMMITTEE Oct. 1973 Chairman R.C.E. 19887 Date	SAN DIEGO REGIONAL STANDARD DRAWING	Revision	By	Approved	Date
	PINNING OF PIPE ABOVE GROUND PIPE INSTALLATIONS				
DRAWING NUMBER I-20					

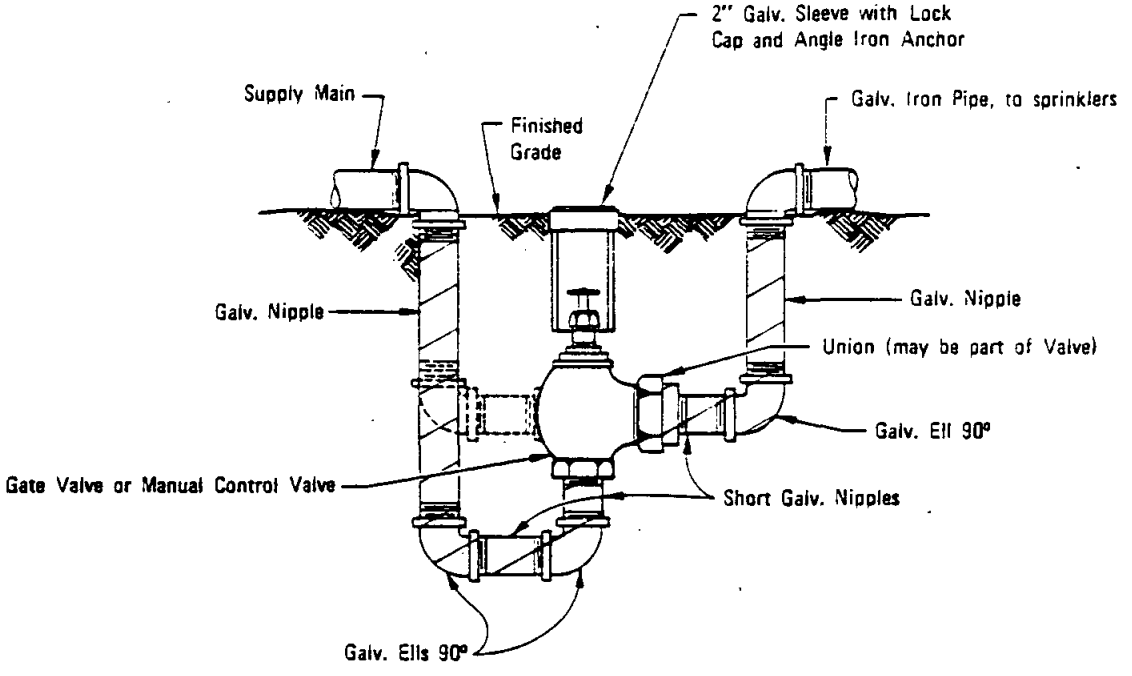

NOTE

All Galvanized Pipe, Nipples and Fittings installed underground shall be wrapped with 2" wide plastic backed adhesive tape, use ½" overlap.

LEGEND ON PLANS

M.C.V.

G.V.

Revision	By	Approved	Date
Note	[illegible]	D.S.	7-79

SAN DIEGO REGIONAL STANDARD DRAWING

MANUAL CONTROL VALVE AND GATE VALVE INSTALLATION FOR ABOVE GROUND PIPE INSTALLATIONS

RECOMMENDED BY THE SAN DIEGO REGIONAL STANDARDS COMMITTEE

Coordinator R.C.E. 19807 Dec. 1975 Date

DRAWING NUMBER I-21

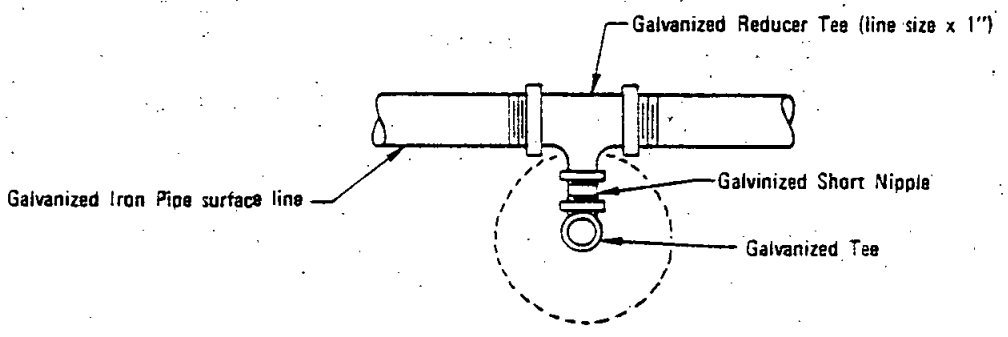

PLAN

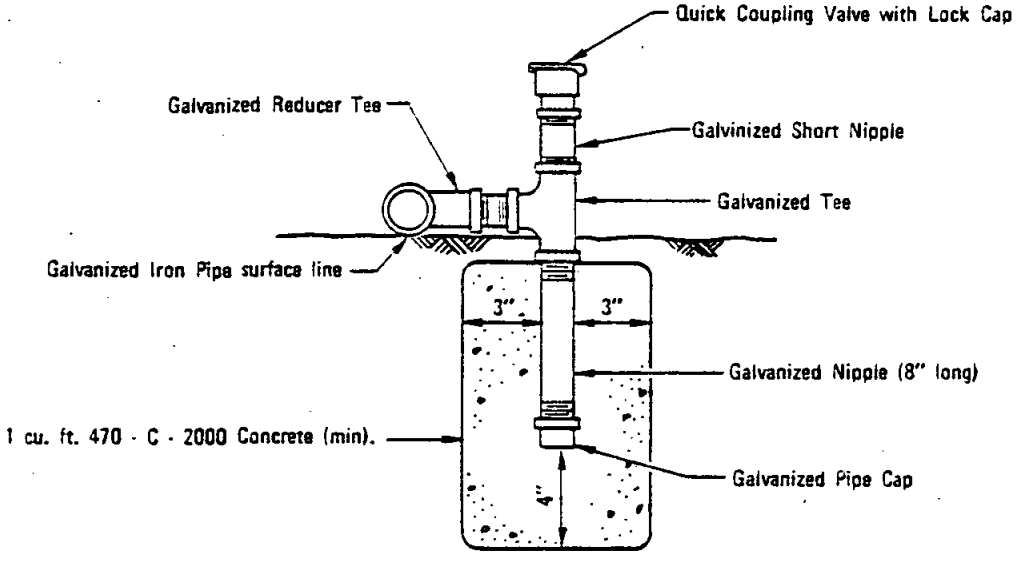

ELEVATION

LEGEND ON PLANS

RECOMMENDED BY THE SAN DIEGO REGIONAL STANDARDS COMMITTEE Dec. 1975 Coordinator R.C.E. 19807 Date	SAN DIEGO REGIONAL STANDARD DRAWING	Revision	By	Approved	Date
	QUICK COUPLER ASSEMBLY ABOVE GROUND PIPE INSTALLATIONS				
DRAWING NUMBER I-22					

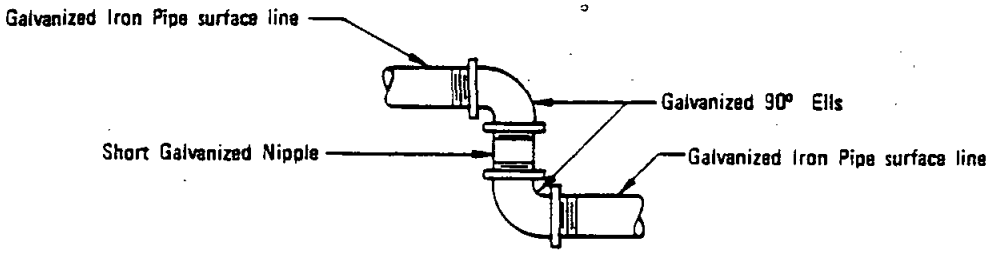

SWING JOINT DETAIL

PLAN

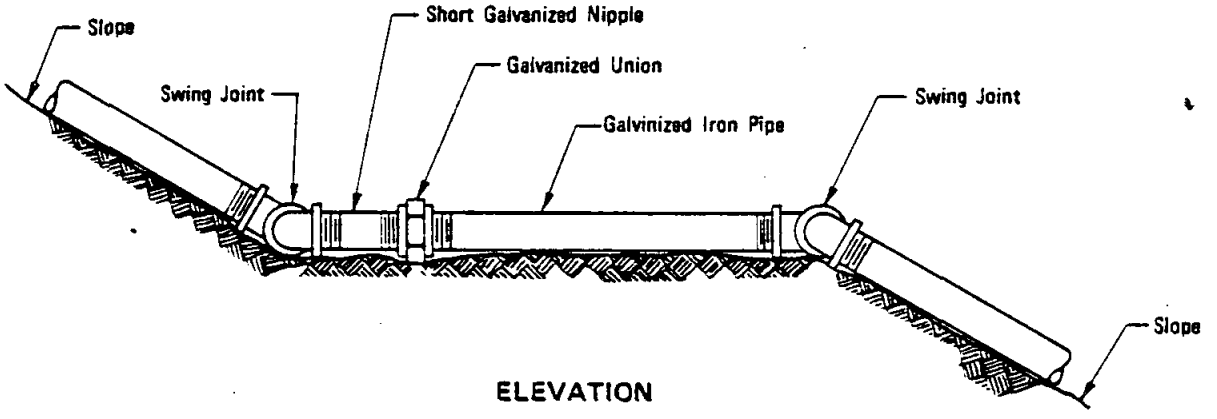

ELEVATION

NOTE

Swing Joints shall be used at each change of grade.

LEGEND ON PLANS

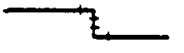

Revision	By	Approved	Date

SAN DIEGO REGIONAL STANDARD DRAWING

SWING JOINT AND PIPE INSTALLATION ON SLOPES ABOVE GROUND PIPE INSTALLATIONS

RECOMMENDED BY THE SAN DIEGO REGIONAL STANDARDS COMMITTEE

Coordinator R.C.E. 19807 — Dec. 1975 Date

DRAWING NUMBER I-23

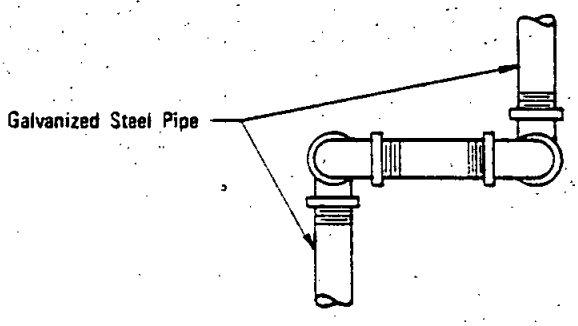

PLAN

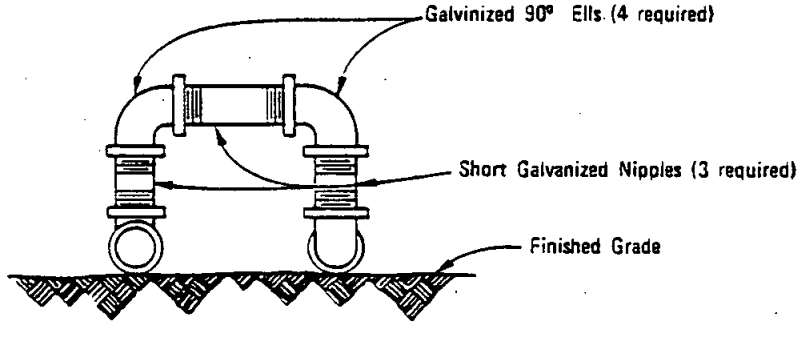

ELEVATION

NOTES

1. Double swing joint shall be used where changes of grade and alignment occur simultaneously.
2. Double swing joint shall be used for expansion joint on long runs of galvanized pipe. (300' maximum runs)

LEGEND ON PLANS

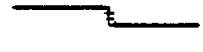

RECOMMENDED BY THE SAN DIEGO REGIONAL STANDARDS COMMITTEE Dec. 1975 Coordinator R.C.E. 15807 Date	SAN DIEGO REGIONAL STANDARD DRAWING	Revision	By	Approved	Date
	DOUBLE SWING JOINT ABOVE GROUND PIPE INSTALLATIONS				
DRAWING NUMBER I-24					

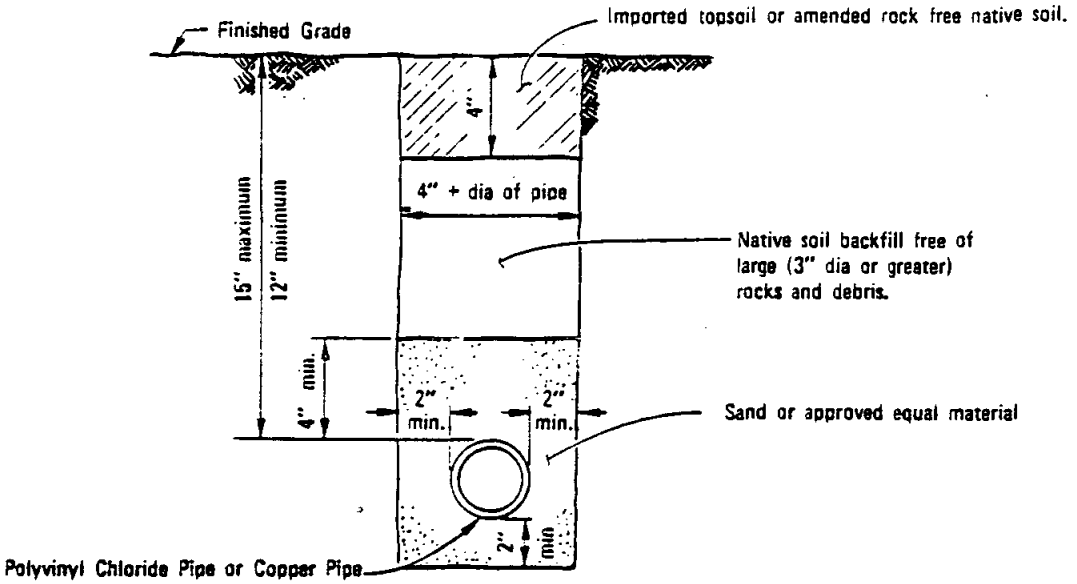

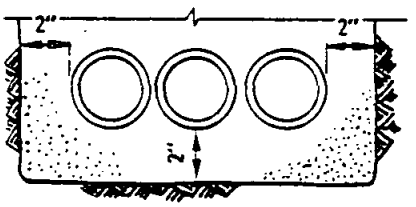

Multiple Pipe Installation Detail
(non-pressure pipe only)

NOTES

1. Backfill material shall be compacted to a relative compaction of 90% or more.
2. All P.V.C. pipe shall lay free in the trench with no induced strain and with sufficient allowance for expansion and contraction as recommended by the manufacturer.
3. Teflon tape, ¼" wide, shall be used on all threaded connections.
4. The letter W shall be stamped or chiseled on the improvement (curb—sidewalk) directly above the pressure pipeline.
5. All plastic pressure pipe under pavement shall be installed in a P.V.C. sleeve.

Revision	By	Approved	Date
Title	TRP	M.B.	10-82

SAN DIEGO REGIONAL STANDARD DRAWING

TRENCH DETAIL NON-PRESSURE PIPE (2" AND SMALLER)

RECOMMENDED BY THE SAN DIEGO REGIONAL STANDARDS COMMITTEE

Allan A. Kershaw — Dec. 1975
Coordinator R.C.E. 19807 — Date

DRAWING NUMBER I-25.1

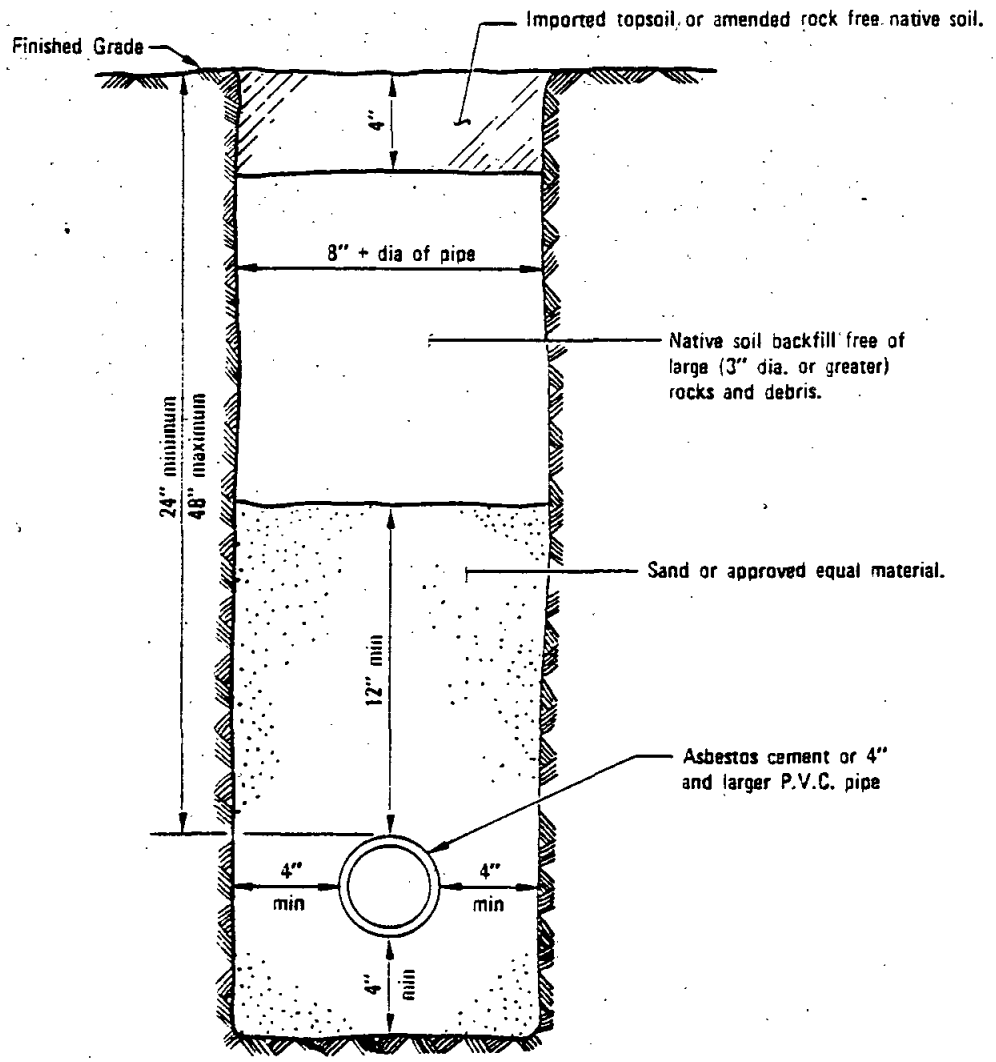

NOTES

1. Backfill material shall be compacted to a relative compaction of 90% or more.
2. All pipeline fittings shall be cast iron, short body, Class 250, cement mortar lined and polyethylene wrapped. All fittings shall have thrust blocks or anchors.
3. The letter W shall be stamped or chiseled on the improvement (curb—sidewalk) directly above the pressure pipeline.
4. No P.V.C. pressure pipeline shall be installed within 3' of any line, unless otherwise specified.

RECOMMENDED BY THE SAN DIEGO REGIONAL STANDARDS COMMITTEE Coordinator R.C.E. 19807 Dec. 1975 Date	SAN DIEGO REGIONAL STANDARD DRAWING	Revision	By	Approved	Date
		Title	TRP	M.B.	10-82
DRAWING NUMBER I-26.1	TRENCH DETAIL PRESSURE PIPE				

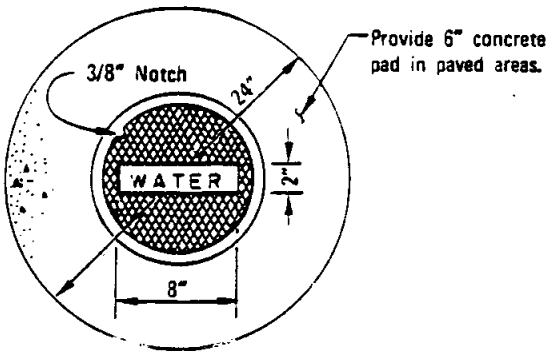

PLAN

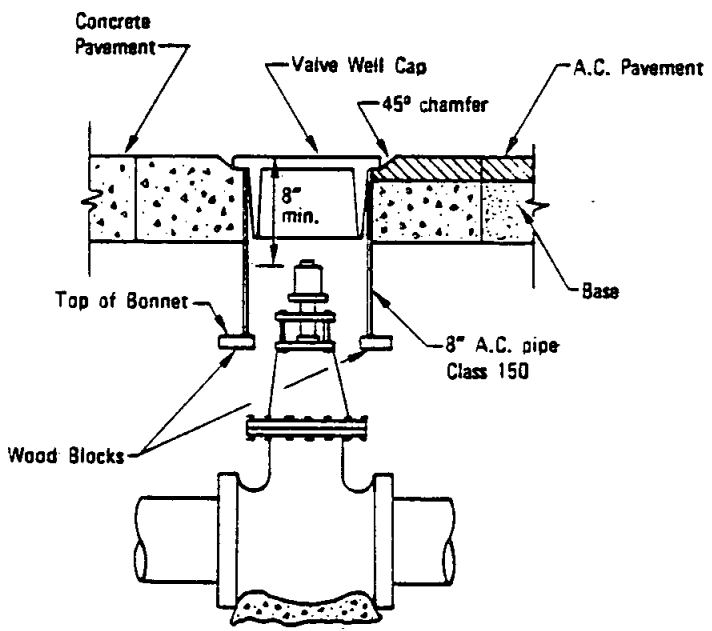

ELEVATION

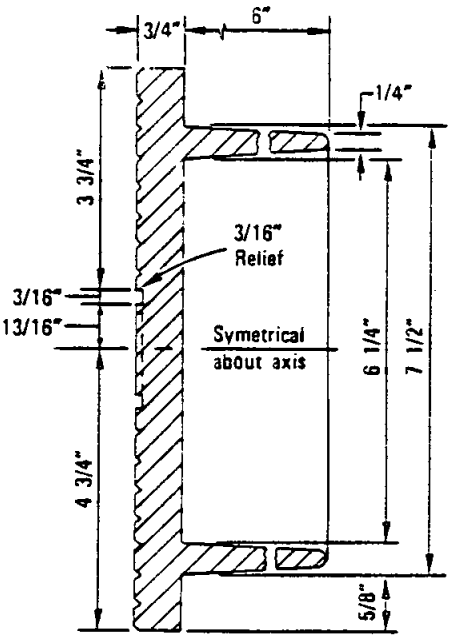

CAST IRON
VALVE WELL CAP

LEGEND ON PLANS

Revision	By	Approved	Date

SAN DIEGO REGIONAL STANDARD DRAWING

VALVE WELL AND COVER

RECOMMENDED BY THE SAN DIEGO REGIONAL STANDARDS COMMITTEE

Coordinator R.C.E. 19807 — Dec. 1975 Date

DRAWING NUMBER 1-27

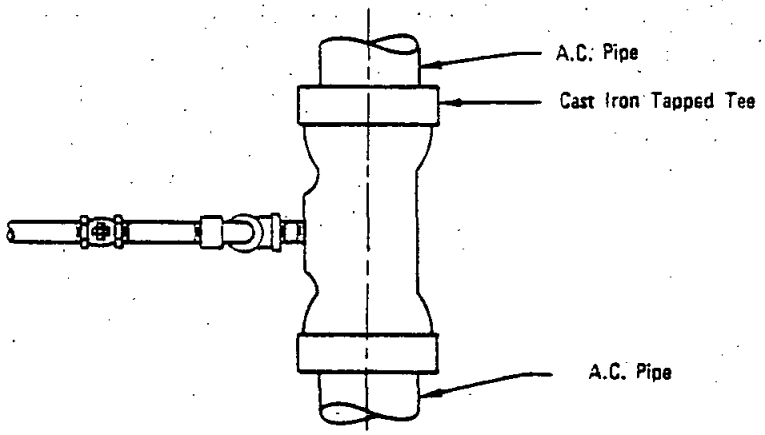

PLAN

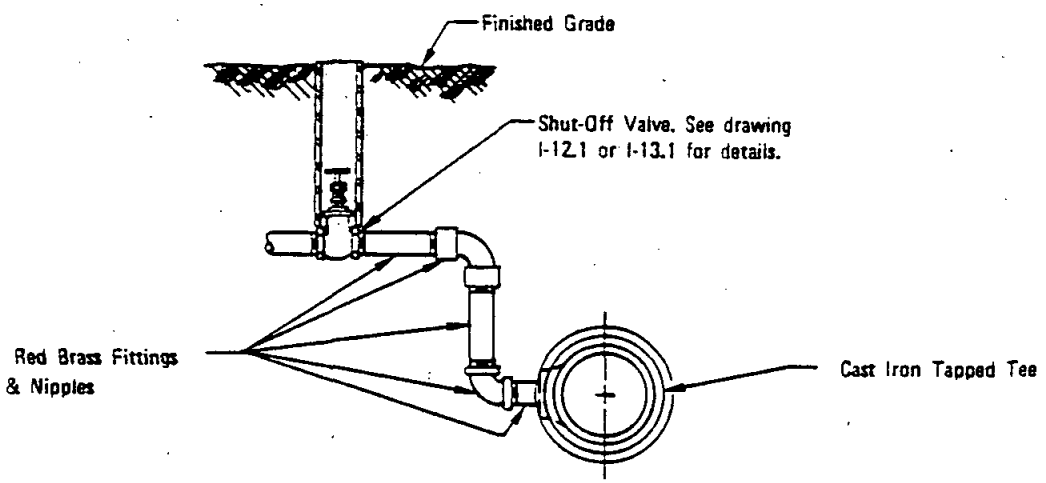

ELEVATION

NOTES

1. Close nipples shall not be used.
2. Cast iron tapped tee shall be short body, class 250, cement mortar lined and polyethylene wrapped.
3. All tapped tees shall have a type - A support block. See Standard Drawing W-19.

LEGEND ON PLANS

RECOMMENDED BY THE SAN DIEGO REGIONAL STANDARDS COMMITTEE Dec. 1975 Coordinator R.C.E. 19807 Date	SAN DIEGO REGIONAL STANDARD DRAWING	Revision	By	Approved	Date
		Reference	TRP	M.B	10-92
DRAWING NUMBER I-28.1	CONNECTION DETAIL FOR NEW ASBESTOS CEMENT SUPPLY MAINS				

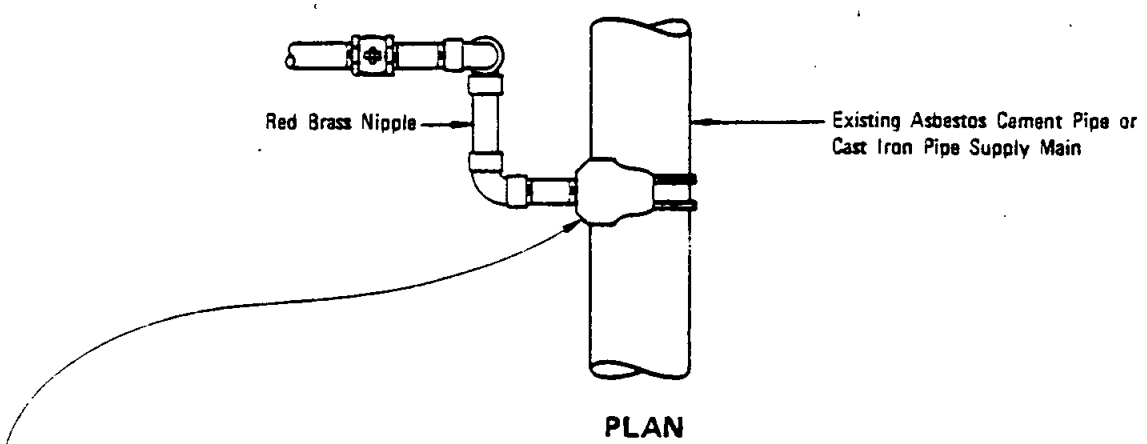

PLAN

May Be: Bronze, double strap service clamp; cast iron tapped clamp coupling with stainless steel bolts; cast iron boltless tapping sleeve; or cast iron (cement mortar lined) cutting in tapped tee.

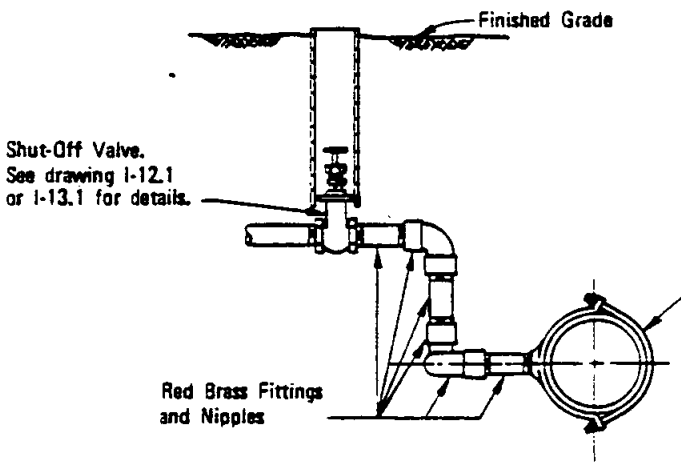

ELEVATION

NOTE

Close nipples shall not be used.

LEGEND ON PLANS

Revision	By	Approved	Date
Reference	TRP	M. B.	10-82

SAN DIEGO REGIONAL STANDARD DRAWING

CONNECTION DETAIL FOR EXISTING SUPPLY MAINS

RECOMMENDED BY THE SAN DIEGO REGIONAL STANDARDS COMMITTEE

Coordinator R.C.E. 19807 — Dec. 1975 Date

DRAWING NUMBER I-29.1

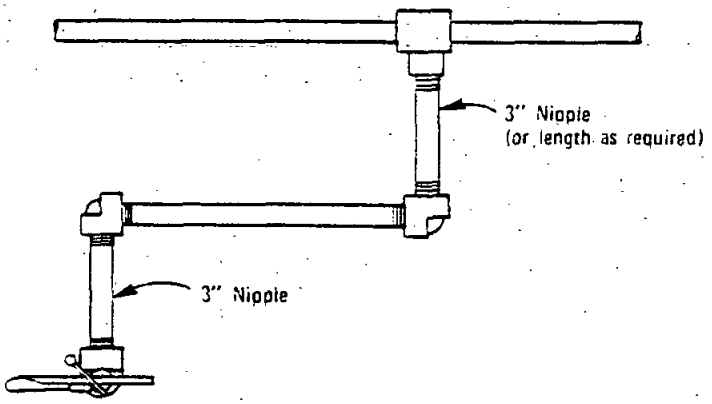

PLAN

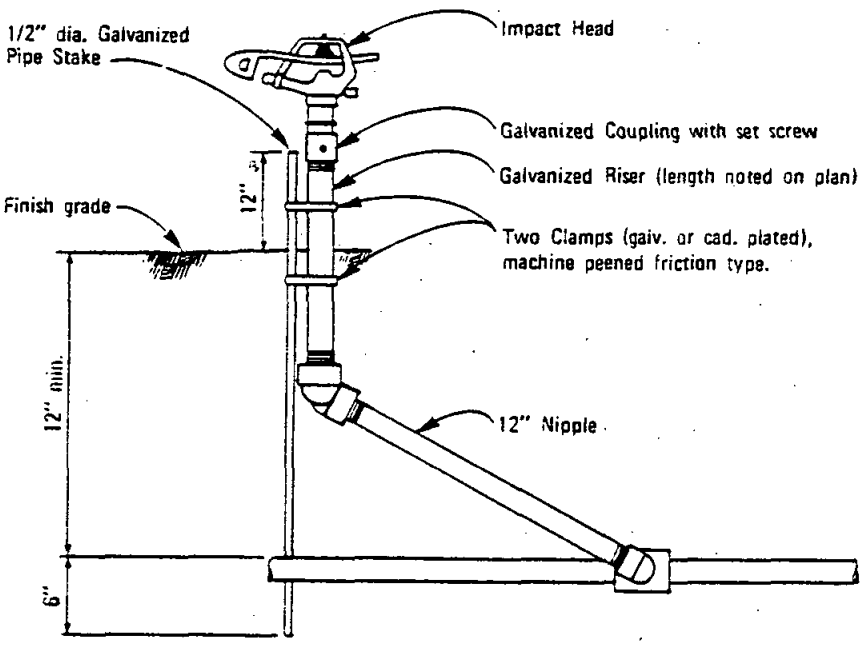

ELEVATION

NOTES

1. All fittings shall be P.V.C. Sch. 40 (except as noted).
2. All nipples shall be P.V.C. Sch. 30 (except as noted).
3. Teflon tape, 3/4" wide, shall be used on all threaded connections.
4. Short nipples shall not be used.

LEGEND ON PLANS

Show a number to indicate type head

RECOMMENDED BY THE SAN DIEGO REGIONAL STANDARDS COMMITTEE Coordinator R.C.E. 25291 Date	SAN DIEGO REGIONAL STANDARD DRAWING	Revision	By	Approved	Date
DRAWING NUMBER 1-30	IMPACT HEAD (WITH SWING JOINT)				

LANDSCAPING

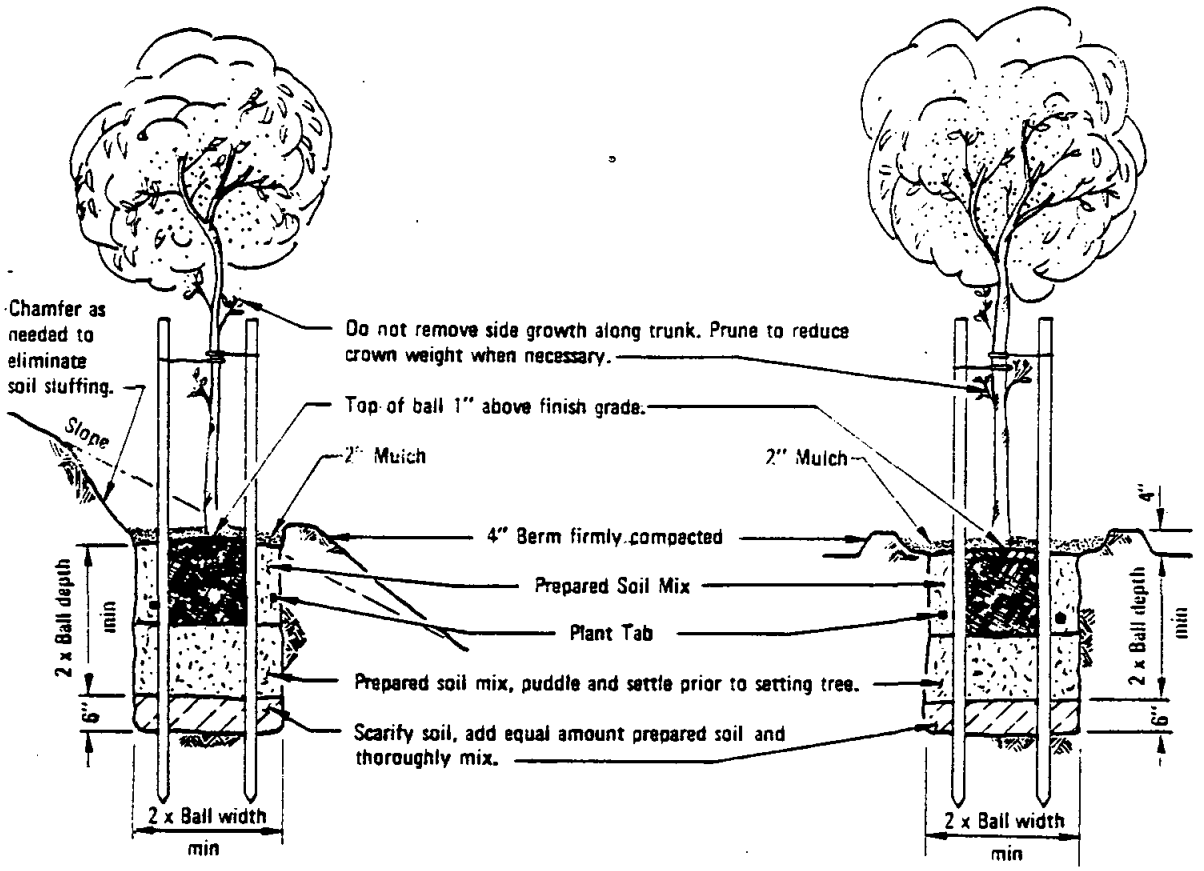

TREE PLANTING - SLOPES

TREE PLANTING - LEVEL GROUND

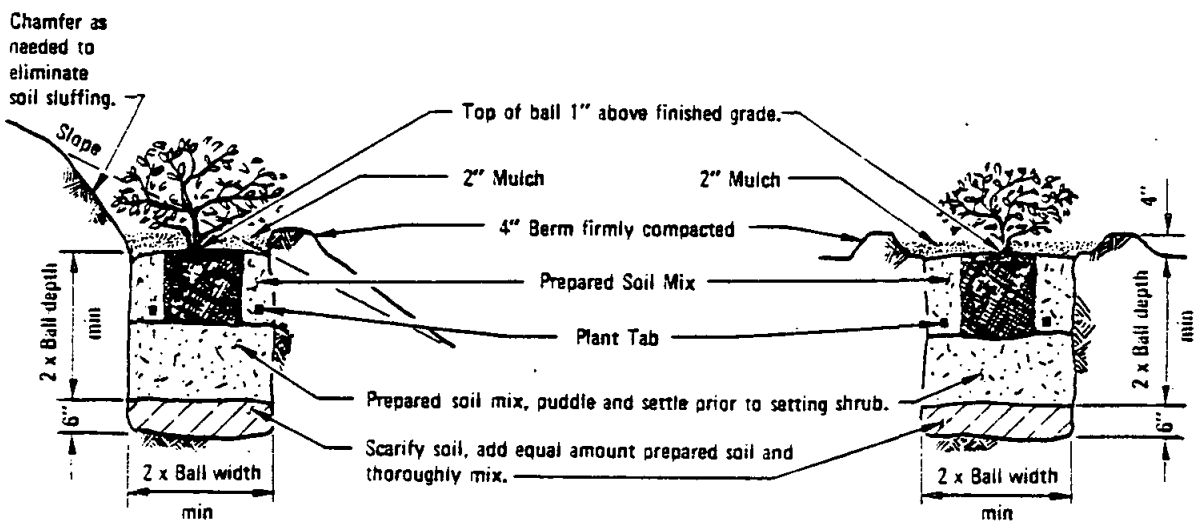

SHRUB PLANTING - SLOPES

SHRUB PLANTING - LEVEL GROUND

Revision	By	Approved	Date

SAN DIEGO REGIONAL STANDARD DRAWING

TREE AND SHRUB PLANTING

RECOMMENDED BY THE SAN DIEGO REGIONAL STANDARDS COMMITTEE

Coordinator R.C.E. 19807 — Dec. 1975 Date

DRAWING NUMBER L-1

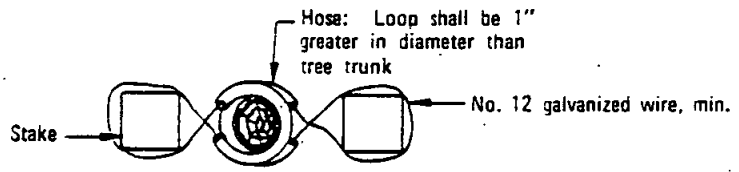

PLAN

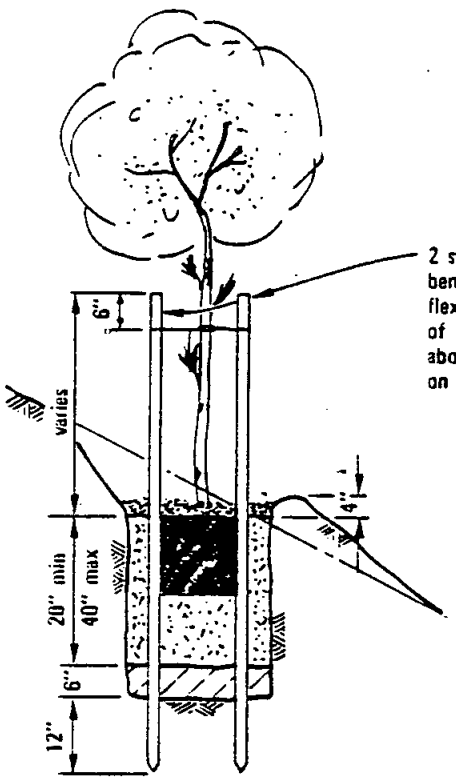

TREE STAKING – SLOPES

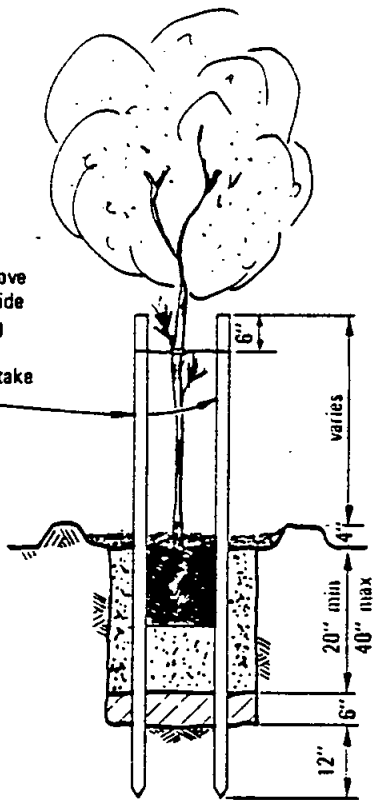

TREE STAKING – LEVEL GROUND

RECOMMENDED BY THE SAN DIEGO REGIONAL STANDARDS COMMITTEE	SAN DIEGO REGIONAL STANDARD DRAWING	Revision	By	Approved	Date
Chairman R.C.E. 19807 Date Dec. 1975		Plan	SC	D. S.	7.79
DRAWING NUMBER L-2	TREE STAKING				

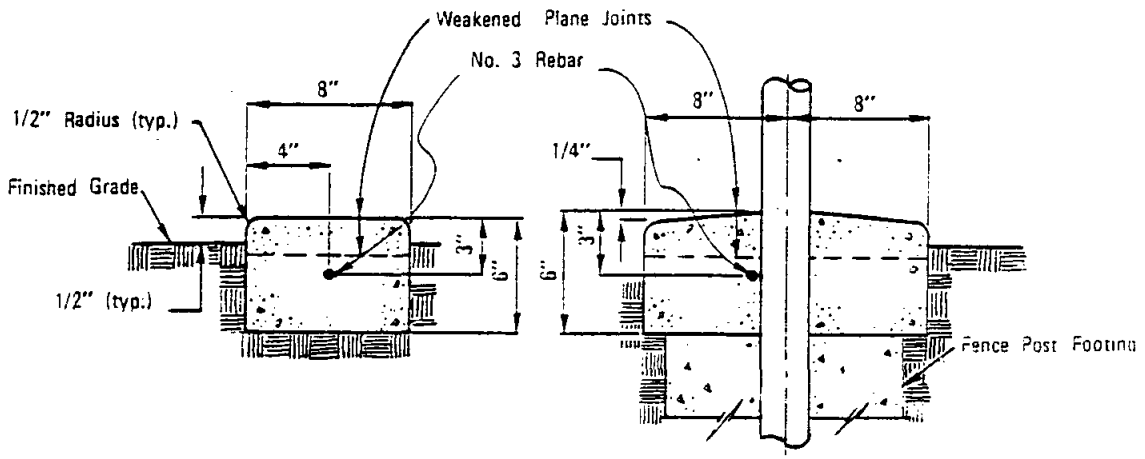

TYPE A
SHRUB AREAS

TYPE B .
UNDER FENCES

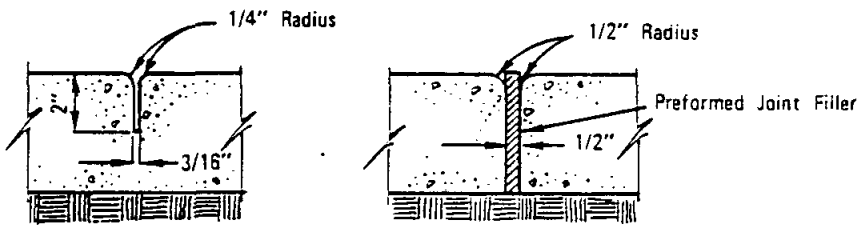

WEAKENED PLANE JOINT
MAX. 20 FT. O. C.

EXPANSION JOINT
MAX. 120 FT. O. C.

NOTES:

1. Rebar shall be continuous with 12 inch overlap at splices.
2. Concrete shall be class 517-C-2500 and same color as any adjacent concrete.
3. Install weakened plane joints at each fence post.
4. Install expansion joints where the mowing strip abuts any concrete improvement.

Revision		Approved	Date	SAN DIEGO REGIONAL STANDARD DRAWING	RECOMMENDED BY THE SAN DIEGO REGIONAL STANDARDS COMMITTEE
				CONCRETE MOWING STRIP	Harry R. Hecht Oct 1982 Chairman R.C.E. C13768 Date
					DRAWING NUMBER L-3

MISCELLANEOUS

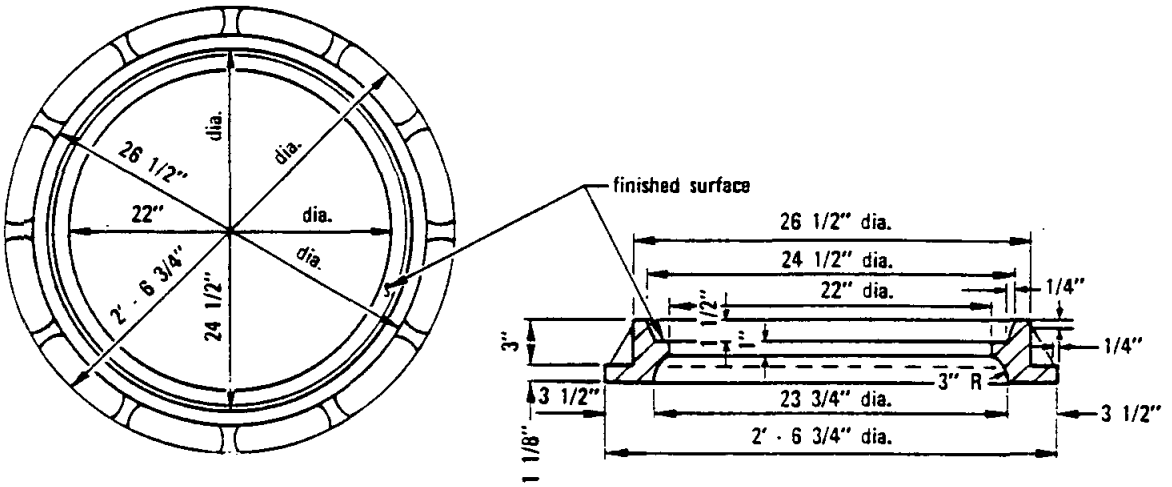

MANHOLE COVER FRAME
CAST IRON WT. 175 LB.

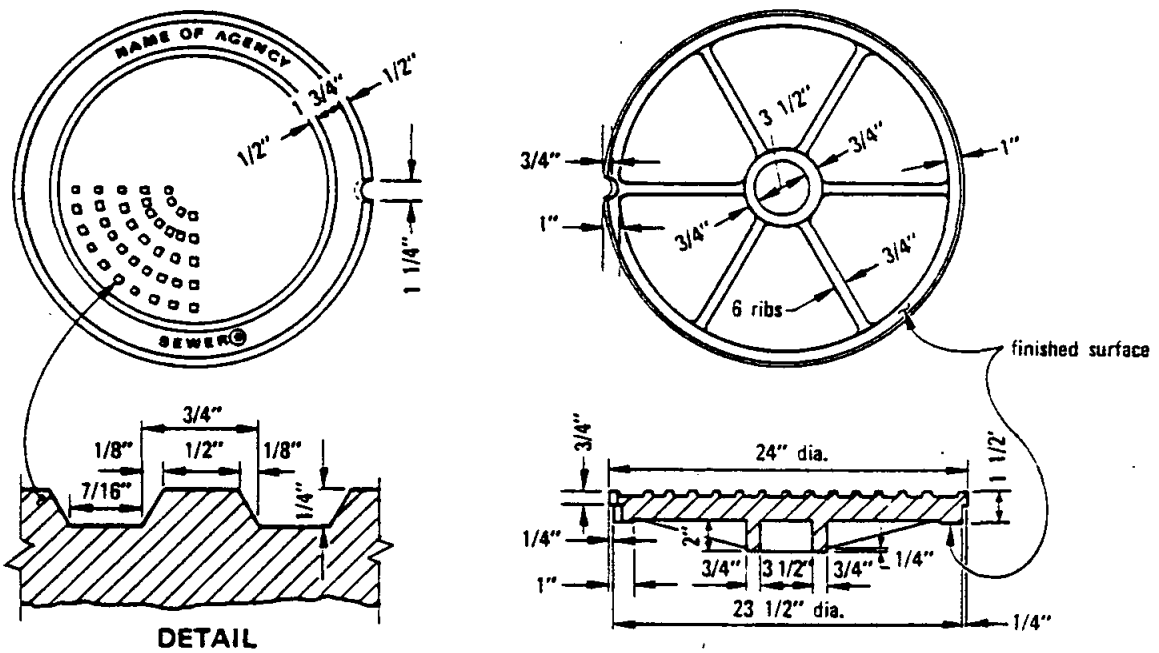

MANHOLE COVER
CAST IRON WT. 155 LB.

NOTES

1. Frame and cover shall be cast iron.
2. Weights: Frame 175 lbs.
   Cover 155 lbs.

FOR	MARK
Sewer Projects	Sewer
Storm Drain Projects	Storm Drain
Water Projects	Water

Revision	By	Approved	Date

SAN DIEGO REGIONAL STANDARD DRAWING

24" MANHOLE FRAME AND COVER HEAVY DUTY

RECOMMENDED BY THE SAN DIEGO REGIONAL STANDARDS COMMITTEE

Coordinator R.C.E. 19807 — Dec. 1975 Date

DRAWING NUMBER **M-1**

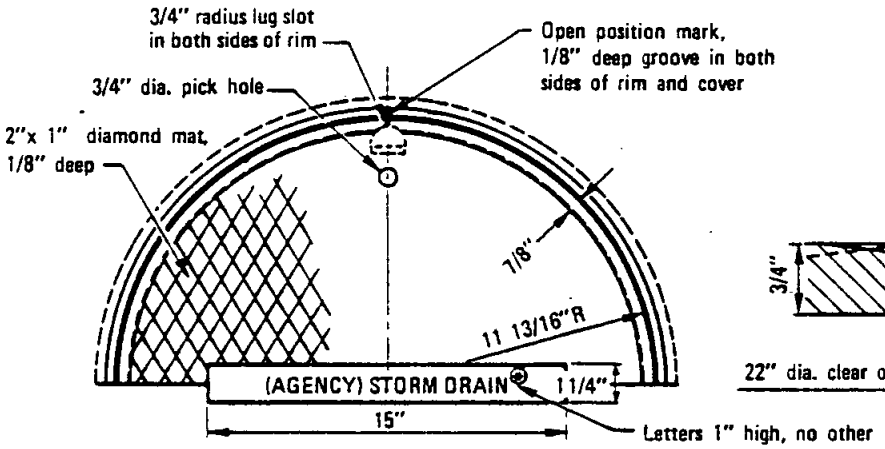

TOP OF FRAME & COVER

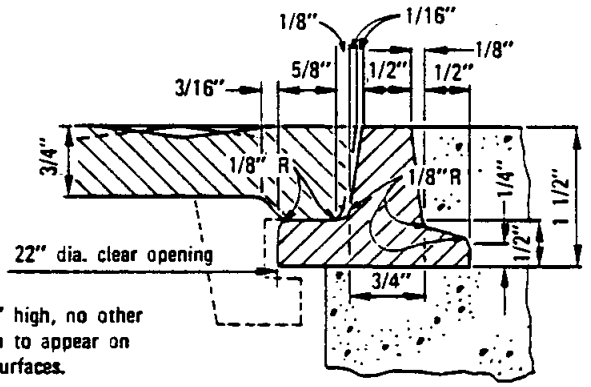

SECTION THROUGH RIM

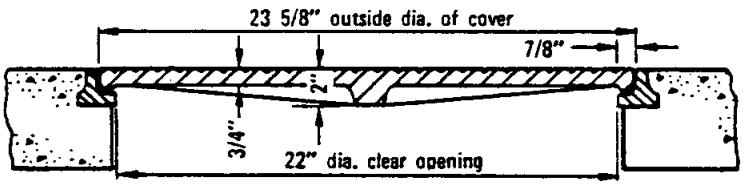

SECTION THROUGH FRAME & COVER

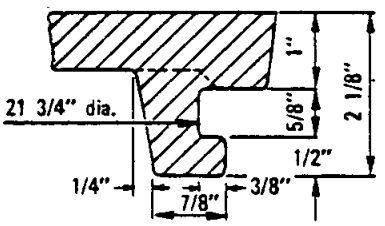

SECTION THROUGH LUG

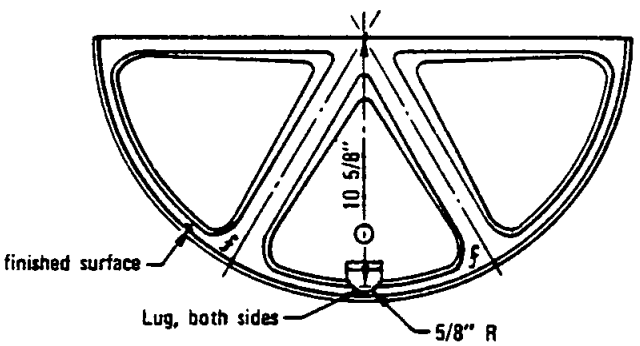

BOTTOM OF COVER

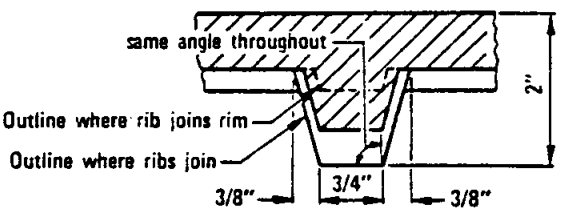

SECTION THROUGH RIB AT MID RADIUS

NOTES

1. Frame and cover shall be cast iron.
2. Frame and cover for use in non-traffic area only.
3. Weights: Frame 30 lbs
   Cover 100 lbs

FOR	MARK
Sewer Projects	Sewer
Storm Drain Projects	Storm Drain
Water Projects	Water

RECOMMENDED BY THE SAN DIEGO REGIONAL STANDARDS COMMITTEE

Dec. 1975

Coordinator R.C.E. 19807 Date

DRAWING NUMBER M-2

SAN DIEGO REGIONAL STANDARD DRAWING

24" MANHOLE FRAME AND COVER LIGHT DUTY

Revision	By	Approved	Date

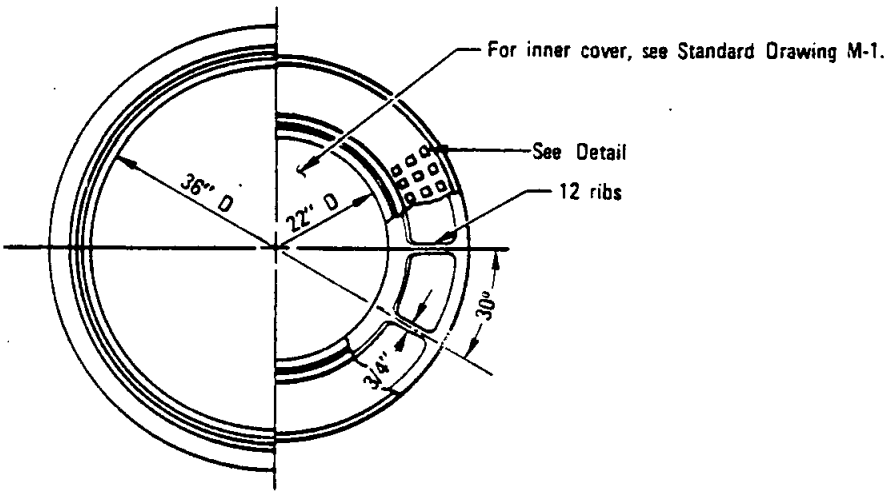

HALF PLAN FRAME & COVER

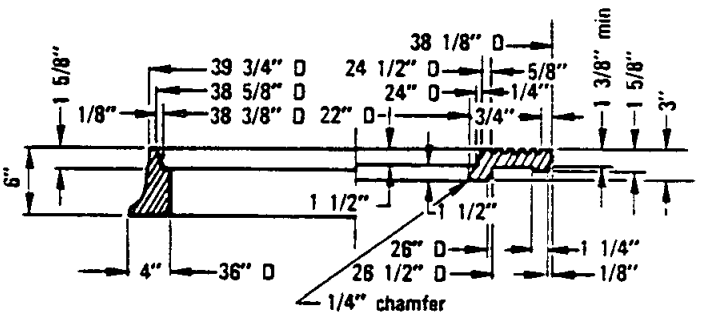

HALF SECTION FRAME & COVER

NOTES

1. Weights:
   - Inner Cover = 155 lbs
   - Outer Cover = 300 lbs.
   - Frame = 330 lbs.
2. Material: Cast Iron
3. Machine seats to prevent noise
4. Fillet radii to be 1/2".

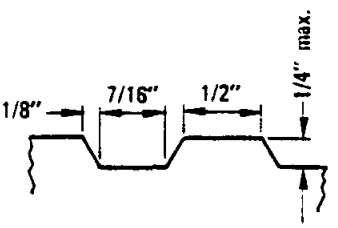

DETAIL

Revision	By	Approved	Date

SAN DIEGO REGIONAL STANDARD DRAWING

36" MANHOLE FRAME AND TWO CONCENTRIC COVERS HEAVY DUTY

RECOMMENDED BY THE SAN DIEGO REGIONAL STANDARDS COMMITTEE

Coordinator R.C.E. 19807 — Dec. 1975 Date

DRAWING NUMBER **M-3**

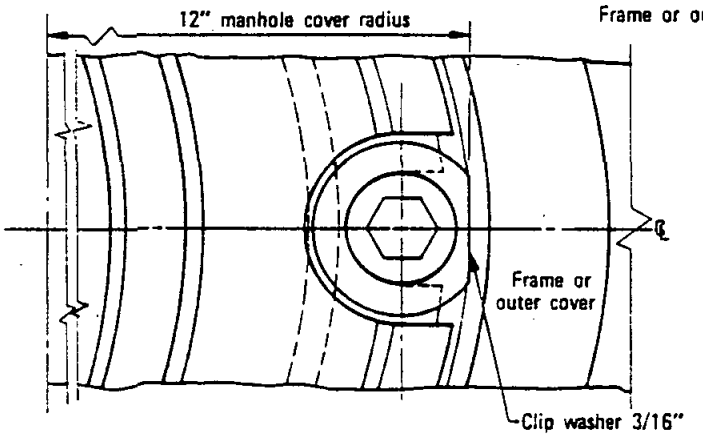

DETAIL PLAN

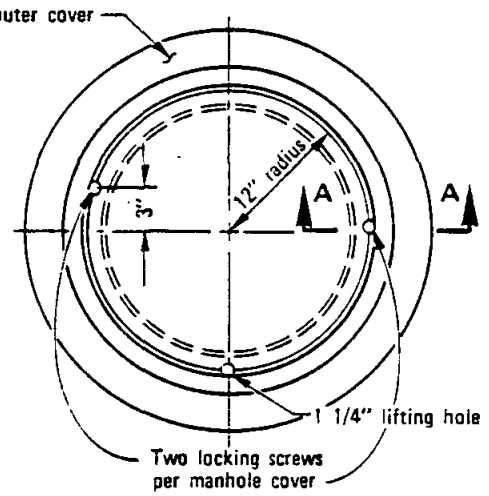

NOTE
For manhole frame and cover details, see Standard Drawing M-1 (single cover).

Drill and tap hole, install 5/8"x 1 1/2" stainless steel, hexagonal socket head cap screw (2 required), Unified National Coarse Thread – 11 per inch – with 1 1/2" O.D. x 11/16" I.D. x .078" thick stainless steel washer.
Use 18-8 stainless steel, A.S.T.M. Standard Specification A-276,Type 300 series.

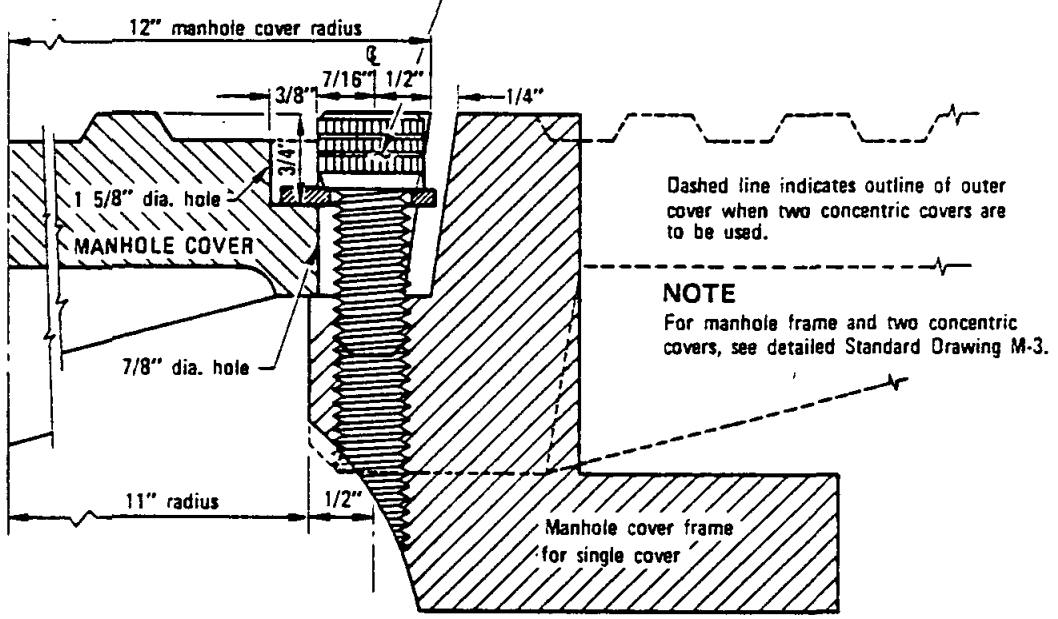

NOTE
For manhole frame and two concentric covers, see detailed Standard Drawing M-3.

SECTION A–A

RECOMMENDED BY THE SAN DIEGO REGIONAL STANDARDS COMMITTEE	SAN DIEGO REGIONAL STANDARD DRAWING	Revision	By	Approved	Date
Coordinator R.C.E. 19807 Date Dec. 1975	MANHOLE COVER LOCKING DEVICE				
DRAWING NUMBER M-4					

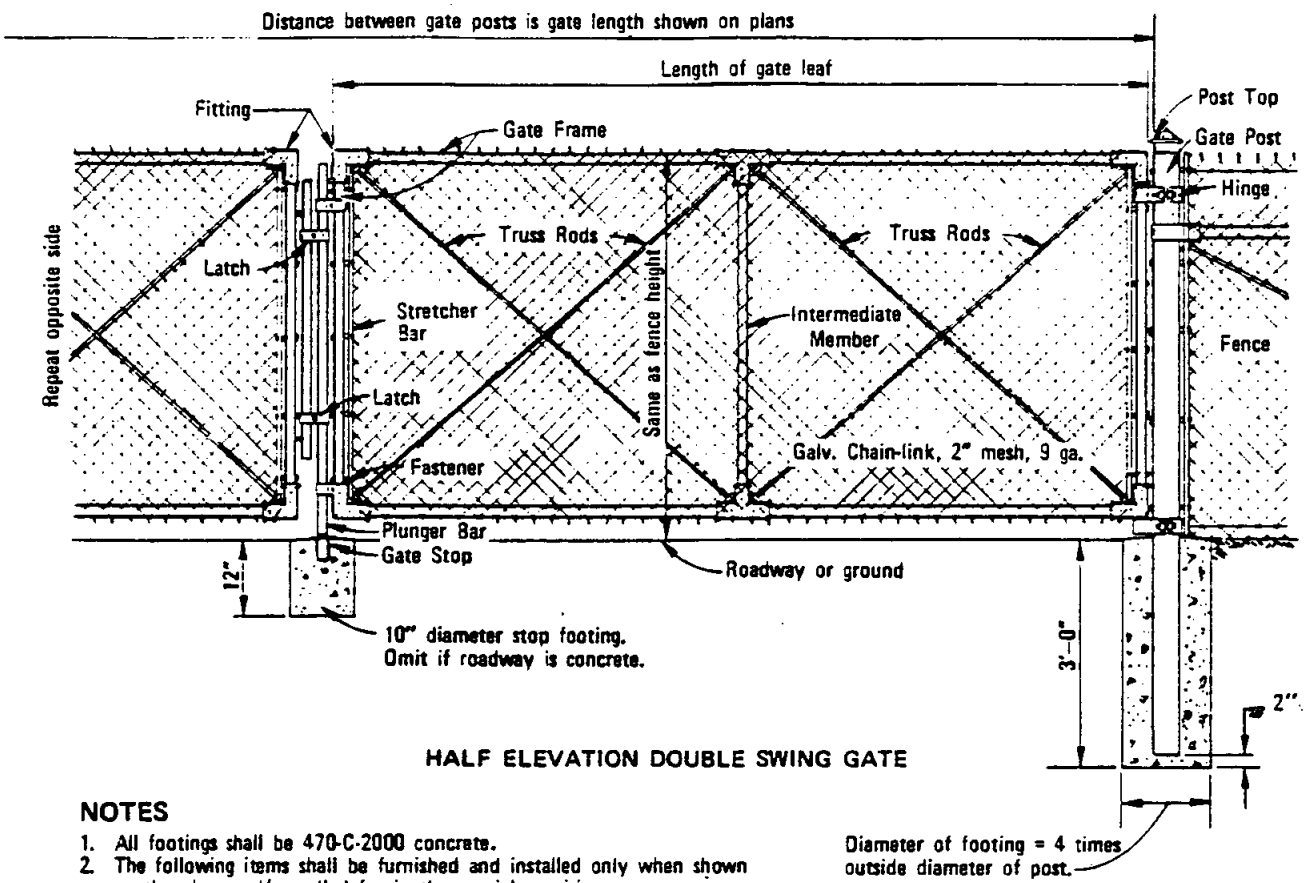

HALF ELEVATION DOUBLE SWING GATE

NOTES

1. All footings shall be 470-C-2000 concrete.
2. The following items shall be furnished and installed only when shown on the plans and/or called for in the special provisions:
   a. Barbed wire
   b. Extension post
3. Chain link fence shall conform to Section 206-6 of the Standard Specifications for Public Works Construction unless specifically noted on this drawing.

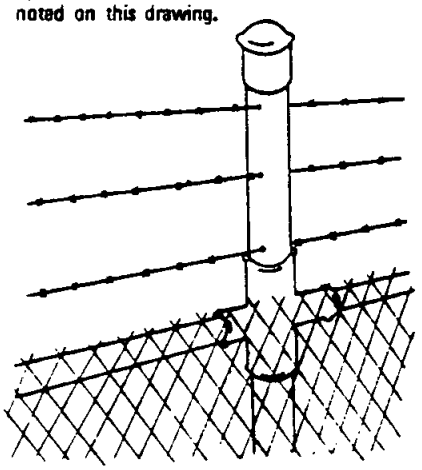

EXTENSION POST AND BARBED WIRE

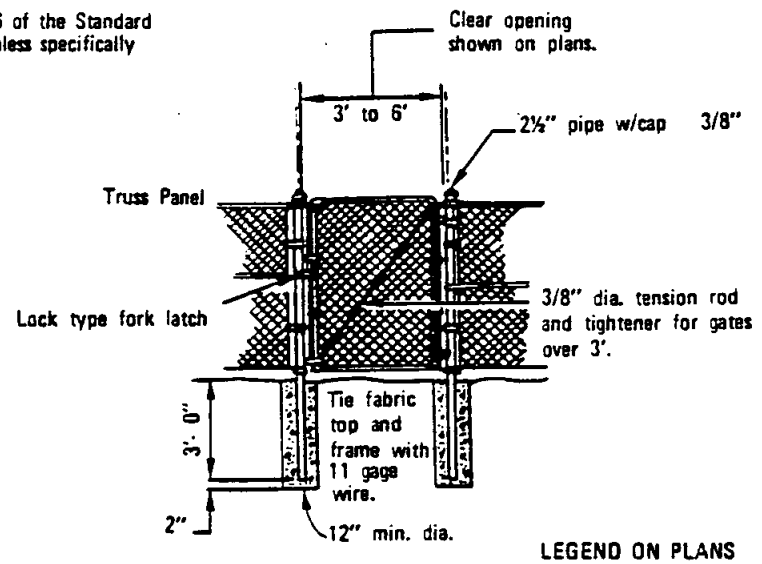

WALK GATE

LEGEND ON PLANS

Revision	By	Approved	Date
Walk gate	TRA	M.B.	10-82

SAN DIEGO REGIONAL STANDARD DRAWING

RECOMMENDED BY THE SAN DIEGO REGIONAL STANDARDS COMMITTEE

Coordinator R.C.E. 19807 — Dec. 1975 Date

CHAIN LINK GATE

DRAWING NUMBER M-5.1

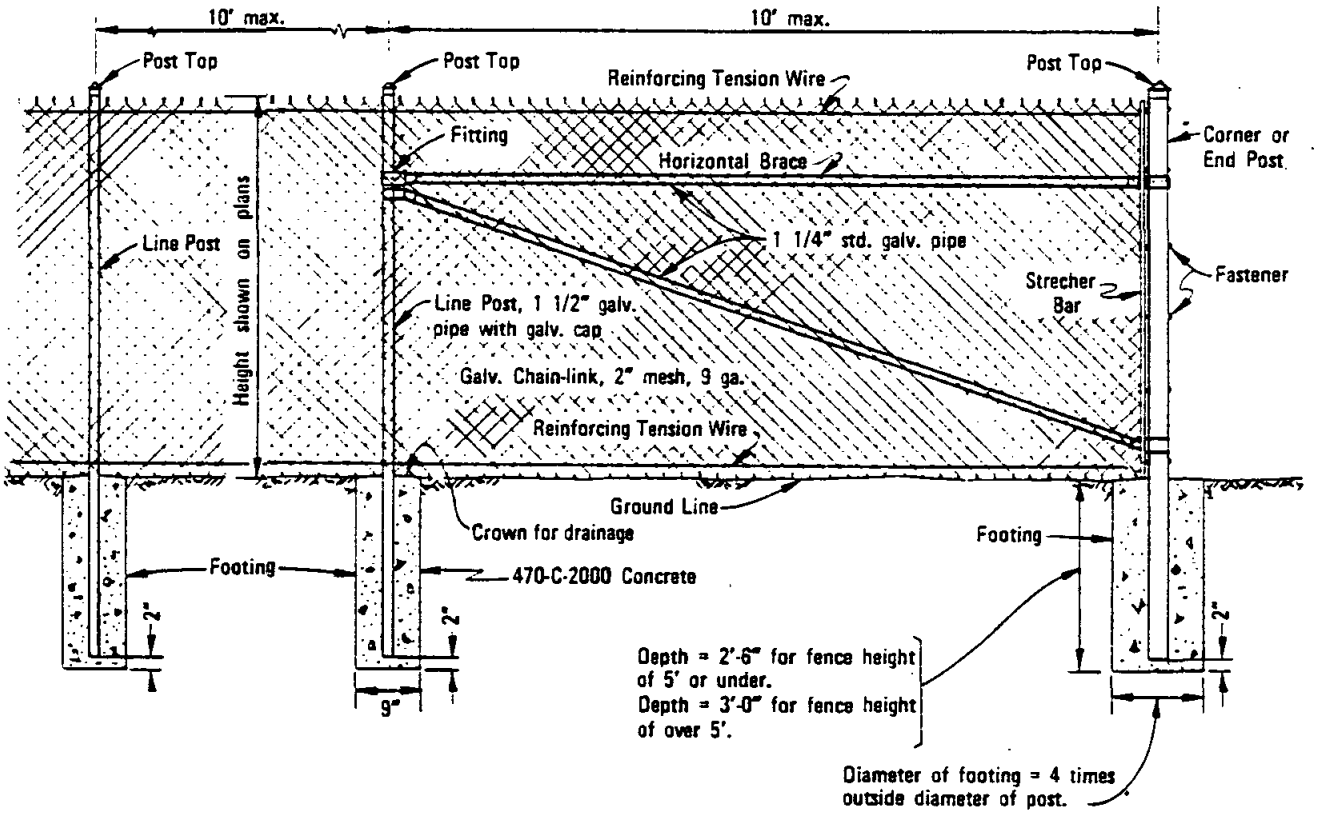

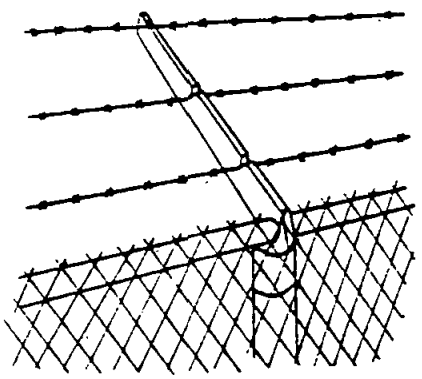

EXTENSION ARM AND BARBED WIRE

NOTES

1. All footings shall be 470-C-2000 concrete.
2. The following items shall be furnished and installed only when shown on the plans and/or called for in the special provisions:
   a. Barbed Wire
   b. Extension Arm
   c. Top Horizontal Rail
3. Chain link fence shall conform to Section 206-6 of the Standard Specifications for Public Works Construction unless specifically noted on this drawing.

LEGEND ON PLANS

RECOMMENDED BY THE SAN DIEGO REGIONAL STANDARDS COMMITTEE

Dec. 1975

Coordinator R.C.E. 19807 Date

DRAWING NUMBER M-6.1

SAN DIEGO REGIONAL STANDARD DRAWING

CHAIN LINK FENCE

Revision	By	Approved	Date
Note 3	TRP	M.B.	10-82

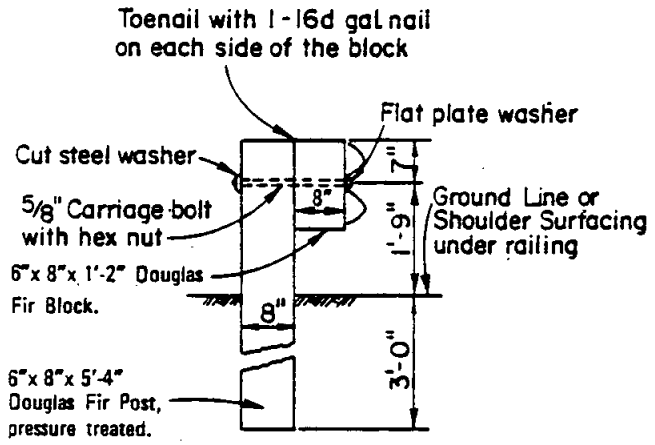

SECTION AT SUPPORT

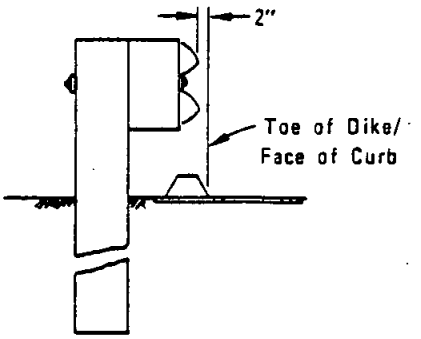

SECTION AT BERM

Post spacing 6'-3" C. to C.

LINE POSTS

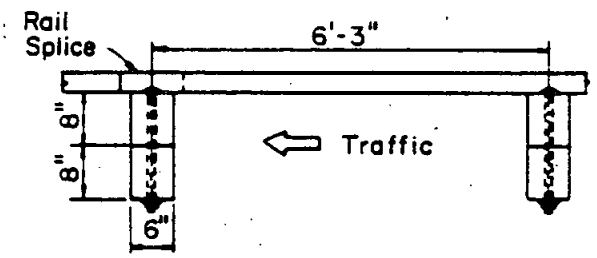

PLAN

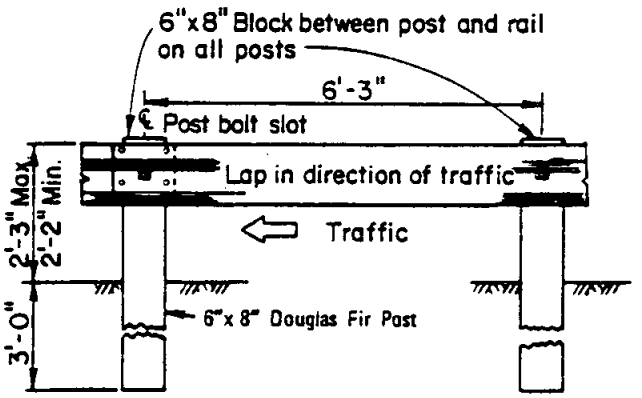

ELEVATION

NOTE

See Standard Drawing M-8 for additional details.

Revision	By	Approved	Date

SAN DIEGO REGIONAL STANDARD DRAWING

METAL BEAM GUARD RAIL INSTALLATION

RECOMMENDED BY THE SAN DIEGO REGIONAL STANDARDS COMMITTEE

Coordinator R.C.E. 19807 — Dec. 1975 Date

DRAWING NUMBER **M-7**

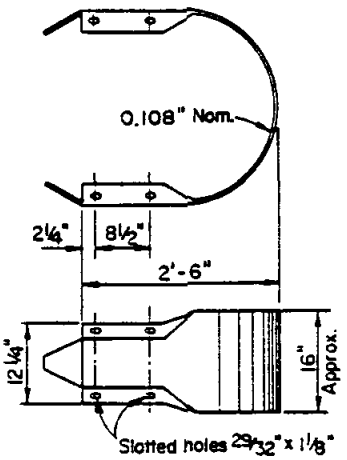

RETURN SECTION

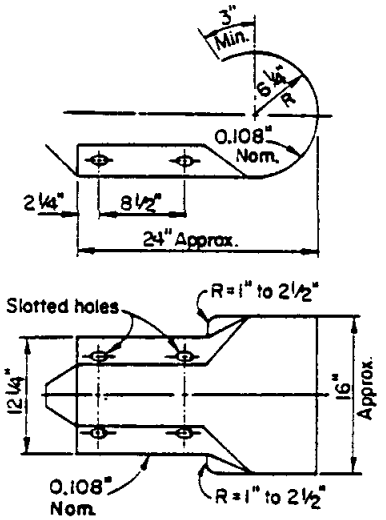

TERMINAL SECTION
TYPE "A"

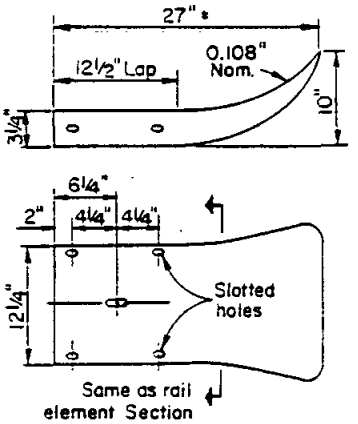

TERMINAL SECTION
TYPE "B"

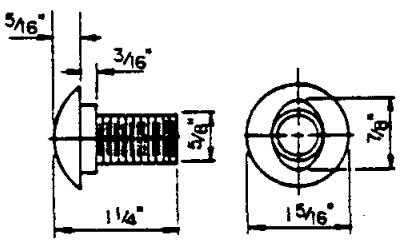

5/8"⌀ BUTTON HEAD BOLT

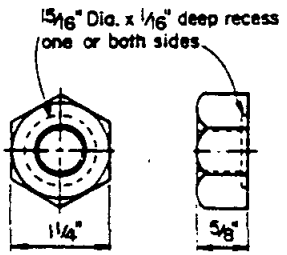

5/8" ⌀ RECESS NUT

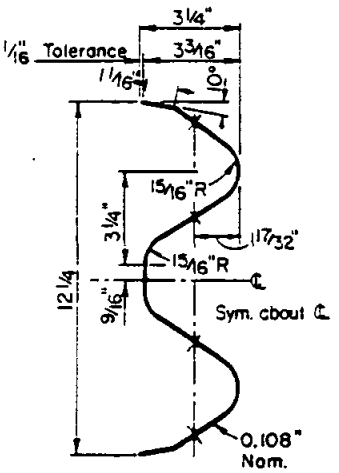

SECTION THRU RAIL ELEMENT

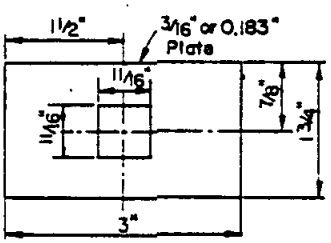

FLAT PLATE WASHER

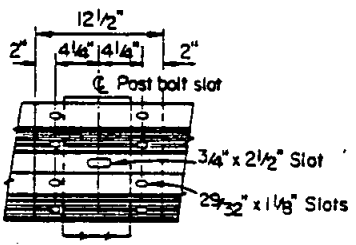

5/8" x 1¼" Button head oval shoulder bolts with 1¼ recessed hex nuts - Total: 8 per splice and 4 per terminal section
Lap in direction of traffic.

RAIL SPLICE

NOTES

1. See Standard Drawing M-7 for guard rail installation.
2. All metal elements shall be galvanized.

RECOMMENDED BY THE SAN DIEGO REGIONAL STANDARDS COMMITTEE Oct. 1975 Coordinator R.C.E. 13867 Date	SAN DIEGO REGIONAL STANDARD DRAWING	Revision	By	Approved	Date
	METAL BEAM GUARD RAIL DETAILS				
DRAWING NUMBER M-8					

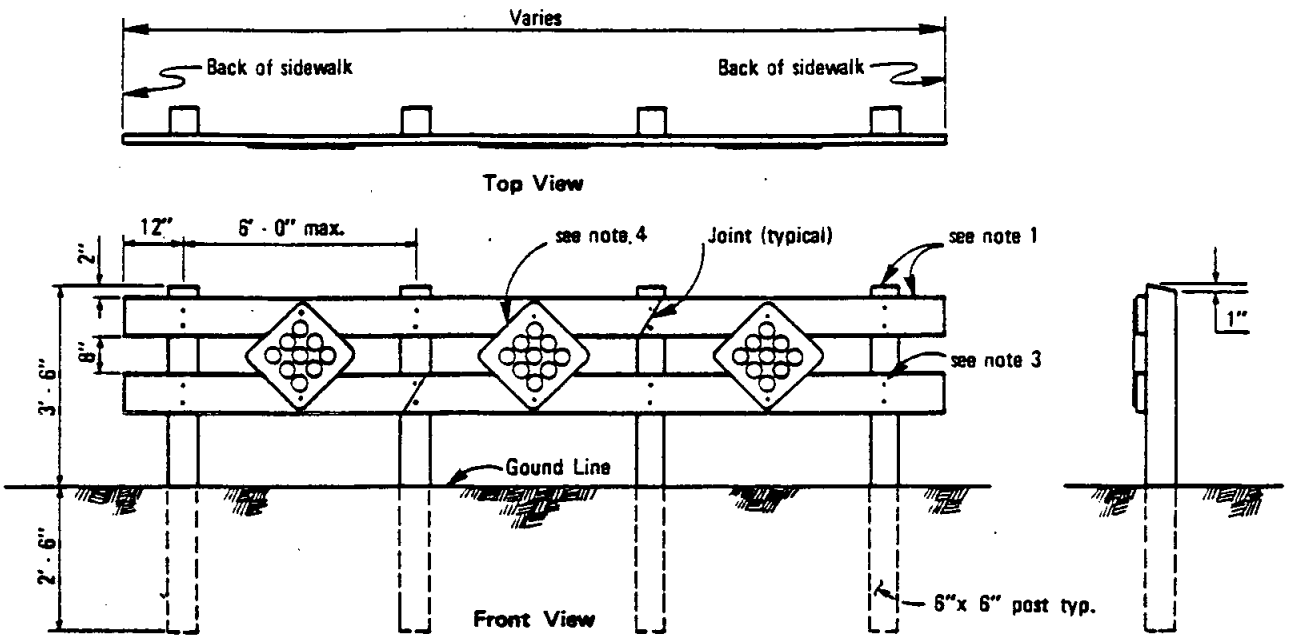

CONTINUOUS BARRICADE

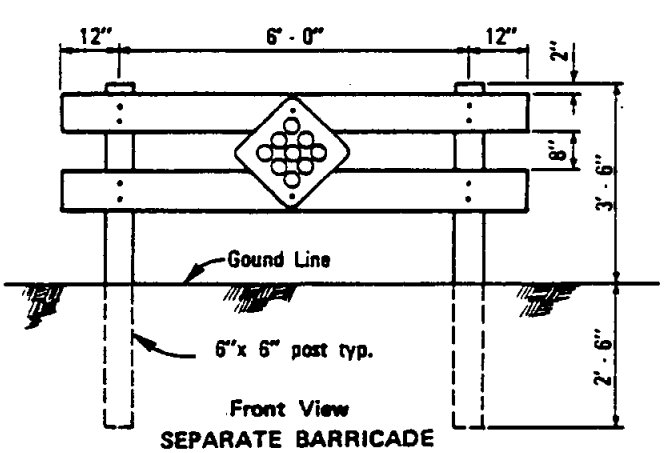

SEPARATE BARRICADE

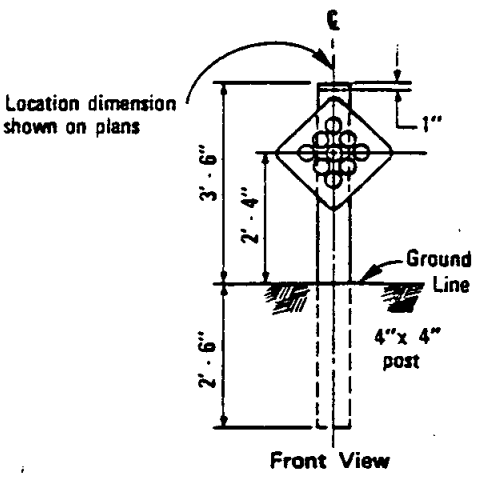

GUARD POST

NOTES

1. Posts to be structural grade redwood or pressure treated (with wood preservative) Douglas Fir, surfaced four sides; cross pieces to be 2"x 8" select grade Douglas Fir, surfaced four sides.
2. All exposed portions of barricades shall be painted with two coats of white exterior enamel over prime coat.
3. Connections shall be made with 3/8"x 6" galvanized lag screws with one (1) washer each. Reflector sign fasteners to be 3/8"x 1½" galvanized lag screws.
4. Reflector signs - California Type N. Size 18"x 18" - Yellow with nine (9) - 3¼" reflectors (center mount).
   a. Reflectors shall be red for use on dead end streets, in all other cases they shall be yellow. Reflector material shall be plastic or other approved reflectorized material.
   b. Sign material shall be aluminum alloy 6061-T6 or 5052-H38, aluminum thickness 0.063 inches.
5. Six foot long hat section metal post per Caltrans Std. Plan A74-A optional for guard post.

LEGEND ON PLANS

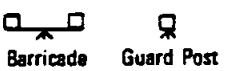

Revision	By	Approved	Date
Cont. Barric.	[illegible]	D.S.	7-79
Post	TRP	M.B.	10-82

SAN DIEGO REGIONAL STANDARD DRAWING

GUARD POST AND BARRICADE

RECOMMENDED BY THE SAN DIEGO REGIONAL STANDARDS COMMITTEE

[illegible] Dec. 1975
Coordinator R.C.E. 19807 Date

DRAWING NUMBER M-9.1

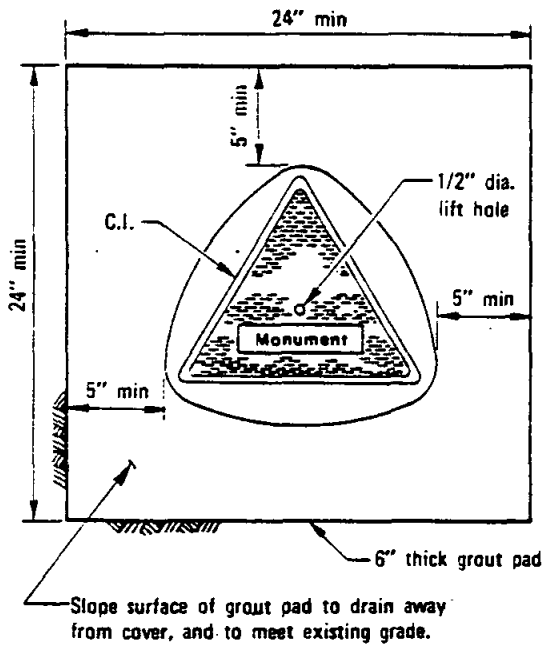

PLAN—IN UNPAVED AREA

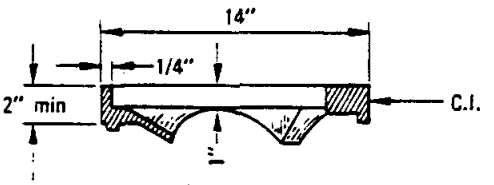

RISER RING

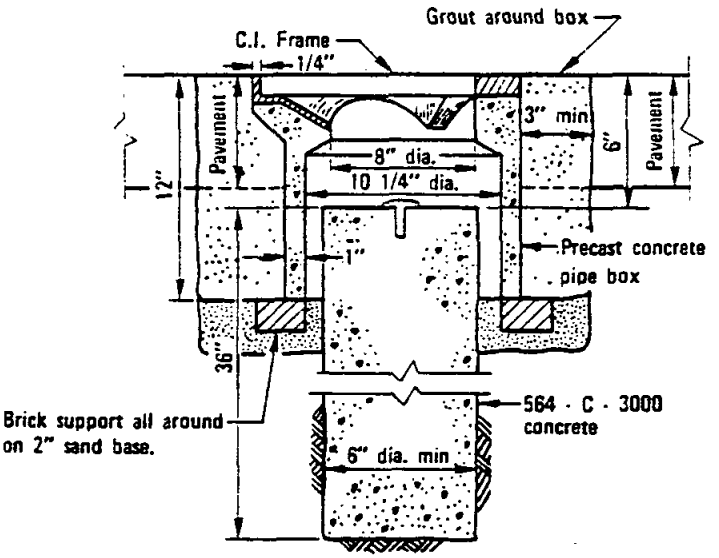

TYPICAL MONUMENT SECTION IN PAVED AREA

NOTES

1. Cover and frame to be cast integrally with pipe box.
2. Monument base may be cast in place or precast.
3. Form and taper exposed upper 6" of cast in place base to a top diameter of 5". (Precast base shall be sand backfilled).
4. Monument marker shall be a domed brass, 3" in diameter.
5. Monument Location:
   a) Set on all centerline intersections unless actual location is modified by the Agency and shown in modified location on map. When centerline intersection is impractical, offset 5 feet on centerline of major street, (see detail at right). If neither centerline can be occupied, two monuments will be set in line around the front on the perimeter of a 10-foot diameter circle, whose center is the point.
   b) Set on centerline at intervals not exceeding 1000 feet on straight runs.
   c) Set on centerline at points of curvature.
   d) Set on center at center points of cul-de-sacs.
   e) Set on centerline when center point of cul-de-sac is offset from centerline.
   f) These standards may be modified at the discretion of the Agency in cases where strict compliance therewith results in more monuments than it considers necessary. The following technique for reducing the number of monuments will be routine.
   g) Substitution of one monument on the "Point of Intersection" for monuments at the "Beginning of Curve" and the "Ending of Curve" when the "Point of Intersection" falls within the pavement area.
   h) Deletion of any monument otherwise required by these standards when its position can be determined by turning one angle from a point on a straight line between two other monuments, providing such point is not more than 300 feet from the point on which the deleted monument would have been placed.

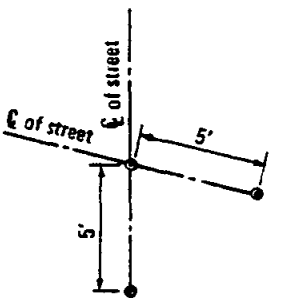

Alternate location of monument. Tie distances shown on final subdivision map if alternate location is used.

LOCATION OF STREET SURVEY MONUMENT

RECOMMENDED BY THE SAN DIEGO REGIONAL STANDARDS COMMITTEE Dec. 1975 Coordinator R.C.E. 19807 Date	SAN DIEGO REGIONAL STANDARD DRAWING	Revision	By	Approved	Date
		Notes	JC	D.S.	7-79
DRAWING NUMBER M-10	STREET SURVEY MONUMENT				

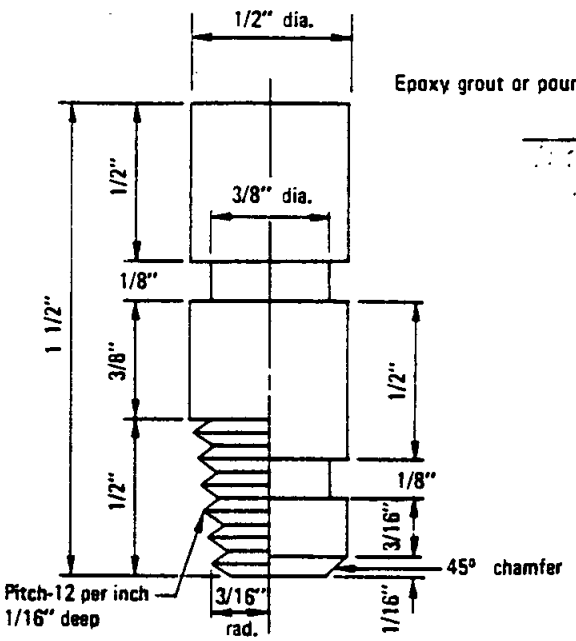

TYPE–A TYPE–B

ELEVATION

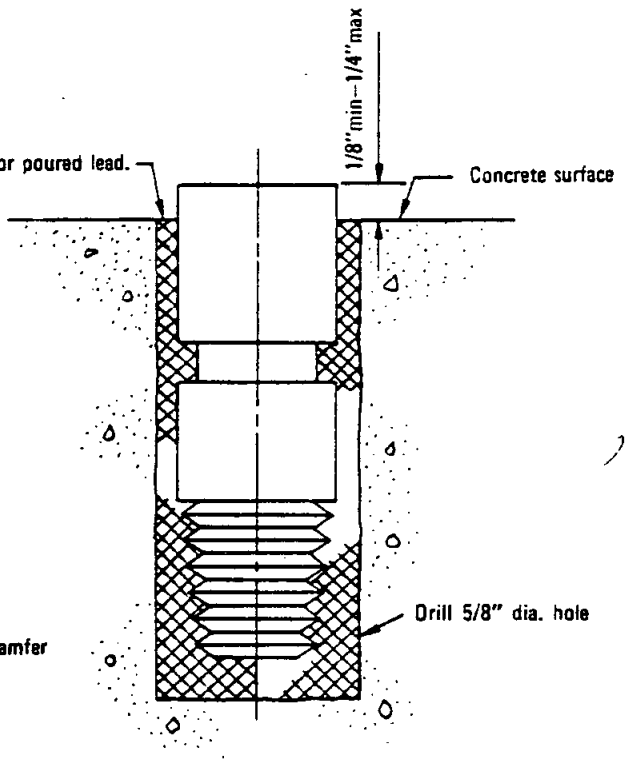

INSTALLATION IN EXISTING CONCRETE

(Typical for Type A or B)

NOTES

1. Material - Brass A.S.T.M. B-16. All machine tolerances 1/64"±, machine finish.
2. May be installed in fresh concrete at time of installation of concrete structure.
3. Location—in most stable, permanent location in vicinity, such as in base for street light standard or traffic signal (behind sidewalk), in curb (not near joint, on curve or near trees), on top of drainage headwall, in foundation for building or retaining wall or in concrete pads for transformers, pump stations etc.

Revision	By	Approved	Date

SAN DIEGO REGIONAL STANDARD DRAWING

BENCH MARK-BRASS PLUG

RECOMMENDED BY THE SAN DIEGO REGIONAL STANDARDS COMMITTEE

Coordinator R.C.E. 19807 Dec. 1975 Date

DRAWING NUMBER M-11

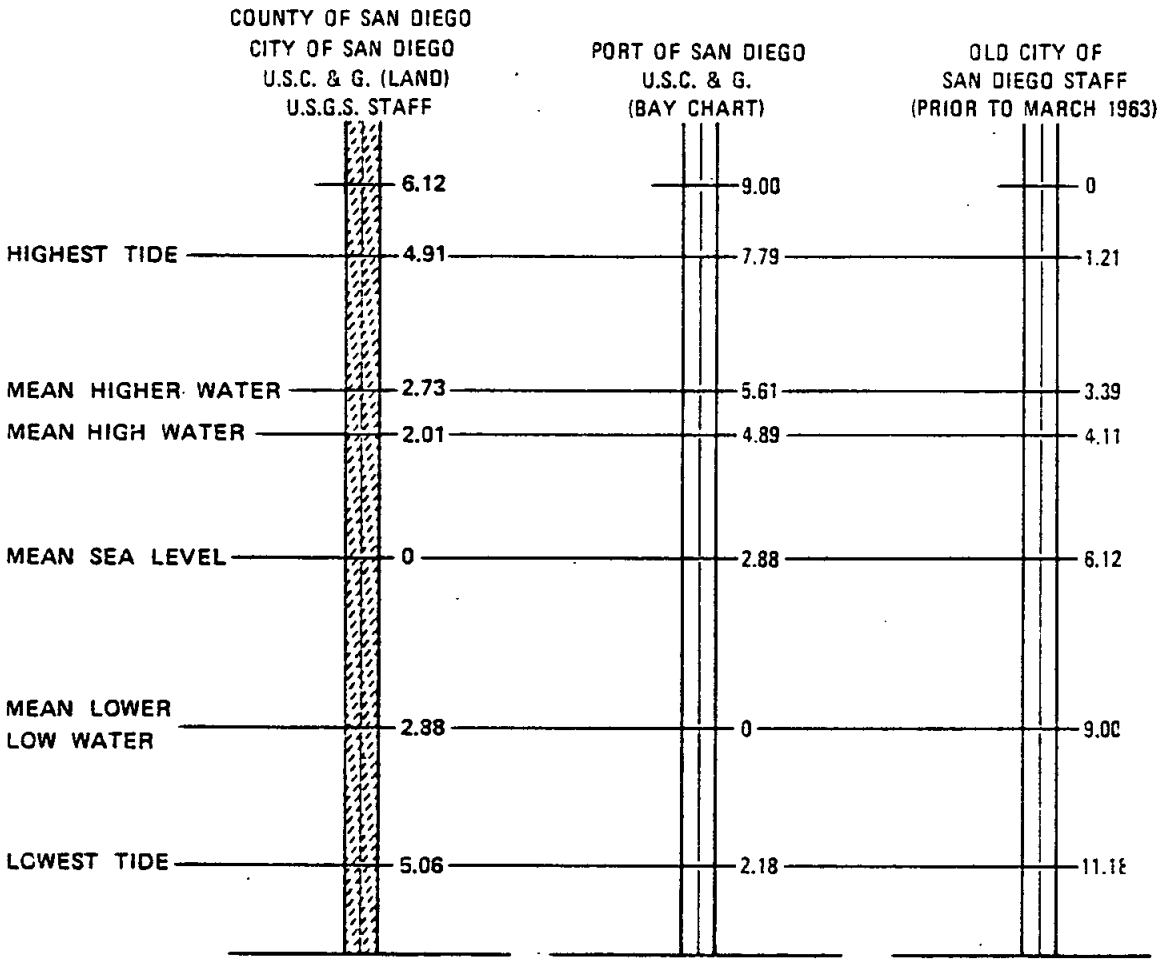

LEGEND

U.S.C. & G.	=	United States Coast and Geodetic Survey.
U.S.G.S.	=	United States Geological Survey.
MEAN HIGH WATER	=	Mean of all high water in San Diego Bay.
MEAN HIGHER WATER	=	Mean of all higher water in San Diego Bay. Bay charts and topography up to the mean high tide based on zero at the mean lower low water.

SOURCE

Data based on U.S.C. & G. "Sea Level Datum of 1929".

RECOMMENDED BY THE SAN DIEGO REGIONAL STANDARDS COMMITTEE

Coordinator R.C.E. 19807 — Dec. 1975 Date

DRAWING NUMBER **M-12**

SAN DIEGO REGIONAL STANDARD DRAWING

DATUMS

Revision	By	Approved	Date

FOUND MONUMENTS

Found monuments must denote the character of the monument, how it is identified and the record, or no record as applicable.

SET MONUMENTS - Criteria for Locating and Character

On subdivision boundaries, permanent monuments are required; and must be shown on the map at intervals as specified by the local agency. The location of such points that are inacceptable or will be destroyed by contruction may be established by ties to permanent reference monuments shown on the final map.

A permanent monument shall be no less substantial than the following:

a. An iron pipe of minimum two inch diameter not less than two feet in length placed upright in the ground so that the top of said pipe is flush with the surface. Said pipe shall be filled with a metal or cement plug at least three inches in depth and centered with a metal tack and disc; or

b. A metal plug with tack and disc set flush with the surface in portland cement conrete sidewalk, curb or pavement; or other monument satisfactory to the City Engineer or County Surveyor.

Lot corners and points of curves along street and alley right of way lines where portland cement concrete sidewalks, curbs or pavement exist, or will be constructed as part of the subdivision requirements, shall be identified with tack and disc set flush with the surface along an extension of the lot line at an approved offset, to be measured radially or at right angles to the right of way line in said sidewalk, curb or pavement. In case the sideline of the lot is not radial or at right angles to the right of way line a disc shall be set along an extension of the sideline at an offset to be measured radially or at right angles to the right of way line. Where no such concrete work exists, and none will be required to be constructed, all lot corners, angle points and points of curve shall be marked with a monument no less substantial than a one-half inch steel rod or pipe, 18 inches long, set flush with the surface.

LEGEND

- ● Fd 2" Iron Pipe Marked RCE XXXX or per Map XXX unless otherwise noted
- ■ Fd Street Survey Monument Stamped RCE XXXX or LS XXXX
- ◎ Set 2" x 24" Iron Pipe Marked RCE XXXX or LS XXXX
- □ Set Lead and Disc Stamped RCE XXXX or LS XXXX
- ○ Set ½" x 18" Iron Pipe Marked RCE XXXX or LS XXXX
- ⊡ Set Street Survey Monument Stamped RCE XXXX or LS XXXX per Standard Drawing M-10

The addition of other symbols is permissible where such will result in a clearer map.

The following notes should be used in the legend where applicable.

Unless otherwise shown on this map:

1. All lot corners except as described below will be monumented by a ½ inch by 18 inch iron pin stamped (RCE or LS number).

2. Lot corners along the sideline of dedicated street right of way will be monumented by a disc stamped (RCE or LS number), set along an extension of the lot line at an offset of___ in the (curb, sidewalk). The offset shall be measured radially, or at right angles, to the right of way line. (See example below.)

3. All points of curve of the sidelines of dedicated streets will be monumented by a disc stamped (RCE or LS number), set at an offset of___ in the (curb, sidewalk). The offset shall be measured radially.

EXAMPLE OF OFFSET DISCS

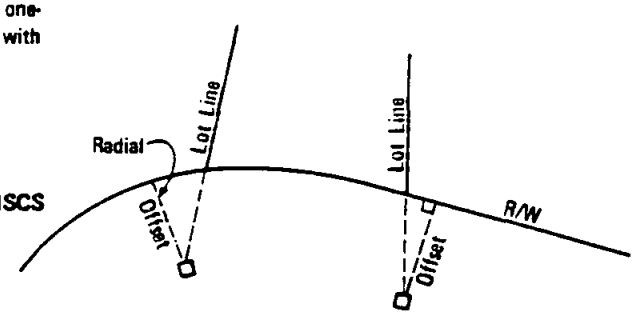

Revision	By	Approved	Date
Notes	SC	O.S.	7-79

SAN DIEGO REGIONAL STANDARD DRAWING

SURVEY MONUMENTS

RECOMMENDED BY THE SAN DIEGO REGIONAL STANDARDS COMMITTEE

Coordinator R.C.E. 15807 — Dec. 1975 Date

DRAWING NUMBER M-13

WEIGHT

1 Gram	= 15.4324 grains	1 Grain	= 0.0648 g.
1 Gram	= 0.0353 oz.	1 Ounce	= 28.3495 g.
1 Kg.	= 2.2046 lb.	1 Pound	= 0.4536 kg.
1 Kg.	= 0.0011 ton	1 Ton	= 907.1848 kg.
1 Ton (met)	= 1.1023 ton	1 Ton	= 0.9072 ton (met)

AREA

1 Sq. cm.	= 0.1550 sq. in.	1 Sq. in.	= 6.4516 sq. cm.
1 Sq. m.	= 10.7639 sq. ft.	1 Sq. ft.	= 0.0929 sq. m.
1 Sq. m.	= 1.1960 sq. yd.	1 Sq. yd.	= 0.8361 sq. m.
1 Hectare	= 2.4710 acres	1 Acre	= 0.4047 hectare
1 Sq. km.	= 0.3861 sq. mile	1 Sq. mile	= 2.5900 sq. km.
1 Sq. km.	= 247.10 acres	1 Acre	= 0.0040 sq. km.

VOLUME

1 Cu. cm.	= 0.0610 cu. in.	1 Cu in.	= 16.3872 cu. cm.
1 Cu. m.	= 35.3134 cu. ft.	1 Cu ft.	= 0.0283 cu. m.
1 Cu. m.	= 1.3079 cu. yd.	1 Cu yd.	= 0.7646 cu. m.

CAPACITY

1 Liter	= 61.0250 cu. in.	1 Cu. in.	= 0.0164 liter
1 Liter	= 0.0353 cu. ft.	1 Cu ft.	= 28.3162 liters
1 Liter	= 0.2642 gal. (U.S.)	1 Gal.	= 3.7853 liters
1 Liter	= 0.0284 bu. (U.S.)	1 Bu.	= 35.2383 liters

LENGTH

1 MM.	= 0.0394 in.	1 In.	= 25.4000 mm.
1 CM.	= 0.3937 in	1 In.	= 2.5400 cm.
1 Meter	= 3.2808 ft.	1 Ft.	= 0.3048 m.
1 Meter	= 1.0936 yd.	1 Yd.	= 0.9144 m.
1 Km.	= 0.6214 mile	1 Mile	= 1.6093 km.

METRIC PREFIX

MULTIPLE	PREFIX	MULTIPLE	PREFIX
1000000	mega	1/10	deci
1000	kilo	1/100	centi
100	hecto	1/1000	milli
10	deka	1/1000000	micro

TEMPERATURE

Degrees Farenheit = 9/5 (Degrees Celcius) + 32

Degrees Centigrade = 5/9 (Degrees Fahrenheit - 32)

RECOMMENDED BY THE SAN DIEGO REGIONAL STANDARDS COMMITTEE

Coordinator R.C.E. 19807 — Dec. 1975 Date

DRAWING NUMBER M-14

SAN DIEGO REGIONAL STANDARD DRAWING

METRIC EQUIVALENTS

Revision	By	Approved	Date
Equation	[illegible]	J. S.	7-79

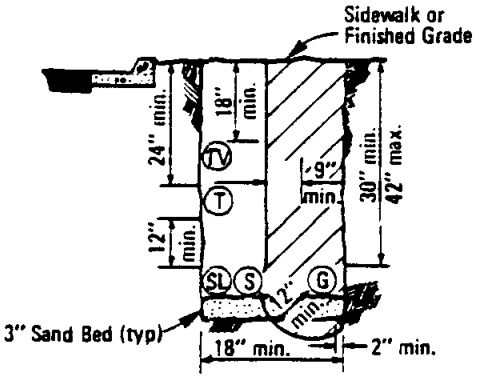

TYPE A (No Sidewalk)
TYPE B (Sidewalk)

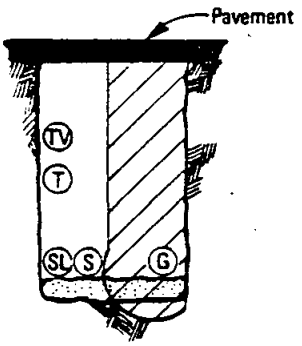

TYPE C

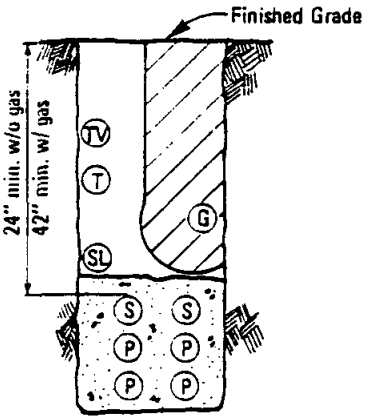

TYPE G
(Concrete Encased)

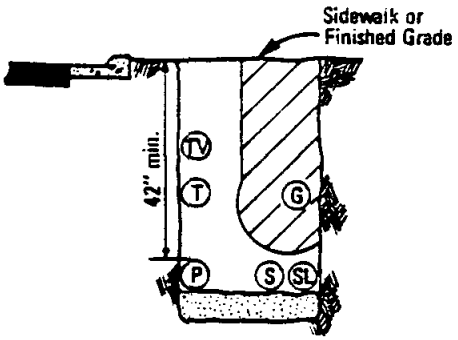

TYPE D (No Sidewalk)
TYPE E (Sidewalk)

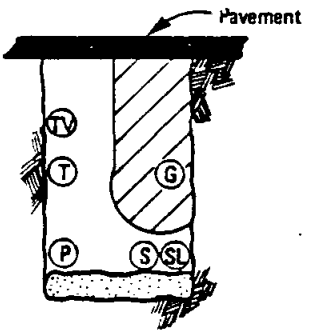

TYPE F

LEGEND

- (G) Gas Main
- (P) Primary Electric
- (S) Secondary Electric
- (T) Telephone
- (SL) Street Light Conduit
- (TV) Television Conduit
- Clear Zone

All dimensions are typical unless otherwise noted.

NOTES

1. Generally utilities are to be installed under the applicable specifications for the particular utility and the specifications of the owner Agency.
2. The location of utilities as shown by the Standard Drawing shall in no way violate existing codes or regulations applicable to individual utilities.
3. Gas main to be placed on property side of trench. Electric primary should be diagonally opposite gas main where possible (Types D, E and F).
4. Installation of sewer and/or water utilities are not permitted in the joint trench shown above.
5. Minimum depth of gas pipe may, subject to gas company inspectors approval, be reduced to 24" where necessary to clear foreign structure crossings.
6. Depth and width of trench varies.
7. When approved by all utilities concerned secondary electric, telephone and CATV may be concurrently installed with random separation.
8. CATV main or trunk line conduit required along all streets, except cul-de-sac streets less than 2500' in length which may be served by feeder lines only.
9. CATV 1½" feeder conduit shall run across streets with each power service line and capped at edge of sidewalk.
10. All CATV terminals and conduits shall be terminated at generally accepted locations and marked. A map shall be filed with the appropriate agency showing the location of the CATV system.
11. In no case shall CATV conduits be placed within 12" of electric or gas lines. Also conduits are not to be placed directly over gas lines.
12. CATV conduit may be placed with the TELCO conduit provided the TELCO minimum depth is held.
13. Types A, B and C apply when an electric secondary conduit only is used. Types D, E and F apply when an electric primary (and secondary) conduit is used.

Revision	By	Approved	Date
St. Light	[illegible]	O. S.	7-74

SAN DIEGO REGIONAL STANDARD DRAWING

JOINT TRENCH UTILITIES LOCATION

RECOMMENDED BY THE SAN DIEGO REGIONAL STANDARDS COMMITTEE

Coordinator R.C.E. 19807 — Dec. 1975 Date

DRAWING NUMBER M-15

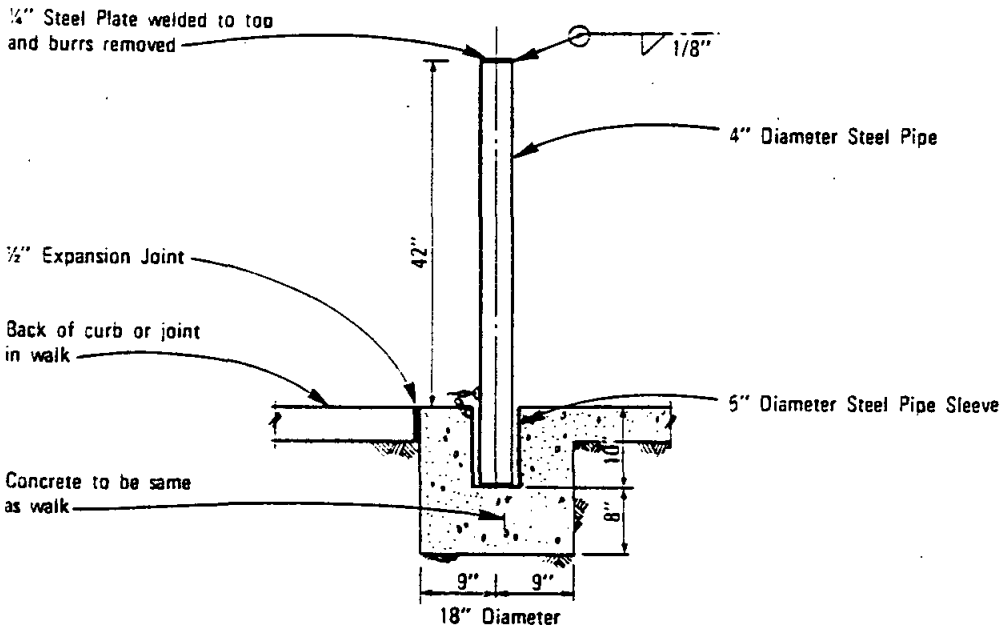

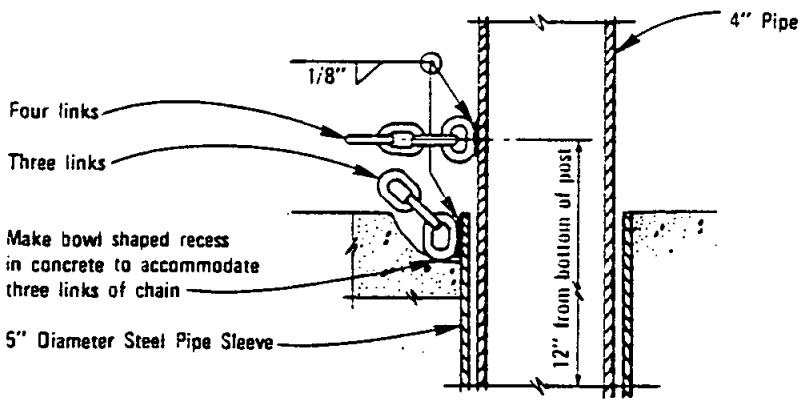

HASP DETAIL
(Showing Welds)

NOTES

1. Chain to be ¼" proof coil chain galvanized steel. Weld four links to post and three links to pipe sleeve.
2. All metal to be hot-dip galvanized after fabrication.

LEGEND ON PLANS

O

RECOMMENDED BY THE SAN DIEGO REGIONAL STANDARDS COMMITTEE Coordinator R.C.E. 25291 Date	SAN DIEGO REGIONAL STANDARD DRAWING	Revision	By	Approved	Date
DRAWING NUMBER M-16	DEMOUNTABLE POST				

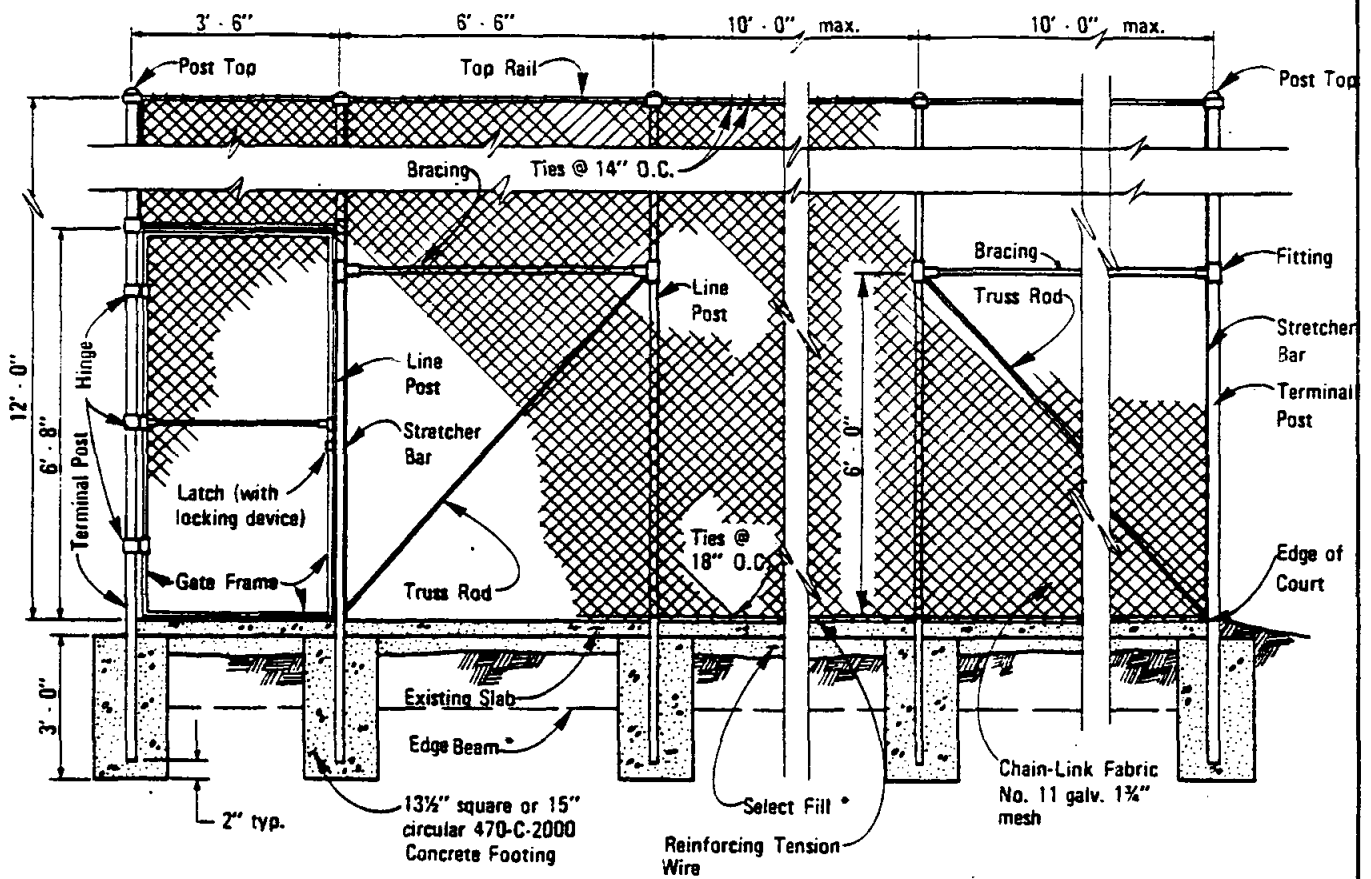

*For Edge Beam, Slab, and Select Fill details, see plans.

ELEVATION

DESCRIPTION	MIN. SIZE IN INCHES	MIN. WEIGHT PER LIN FT IN LBS
Line Post	2.375 O.D.	3.65
Terminal Post	2.875 O.D.	5.79
Top Rail	1.660 O.D.	2.27
Bracing	1.660 O.D.	2.27
Gate Frame	1.660 O.D.	2.27

NOTE

Chain-link fabric shall be erected on the interior side of the courts.

CAUTION: This standard is not to be used if any wind screen is to be applied to the fence.

Revision		Approved	Date

SAN DIEGO REGIONAL STANDARD DRAWING

TENNIS COURT FENCE CHAIN-LINK

RECOMMENDED BY THE SAN DIEGO REGIONAL STANDARDS COMMITTEE

Coordinator R.C.E. 25291 Date

DRAWING NUMBER M-17

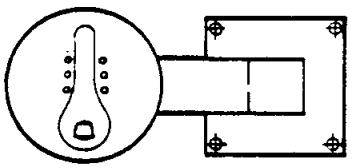

1. Drinking Fountain - Haws model 3376 or approved equal.
2. 3/8" dia. expansion anchors with flat (recessed heads) screws 4 places.
3. 1¼" P.V.C. pipe with sweep 90° ell connection to fountain drain.
4. 9½" x 16" concrete yard box with hinged locking top (Brooks No. 3HL or equal) set on red brick foundation.
5. 4" x 40 lin. ft. perforated underdrain pipe, encased in crushed rock (3/4" size). Pipe to be A.D.S. or equal.
6. 1" gate valve with red brass cross handle and union. Install as per Std. Dwg. I-12.1
7. 2" dia. galv. pipe sleeve with red brass lock cap per Std. Dwg. I-12.1.
8. Rigid copper pipe from gate valve to fountain assembly connection.
9. Concrete pavement.

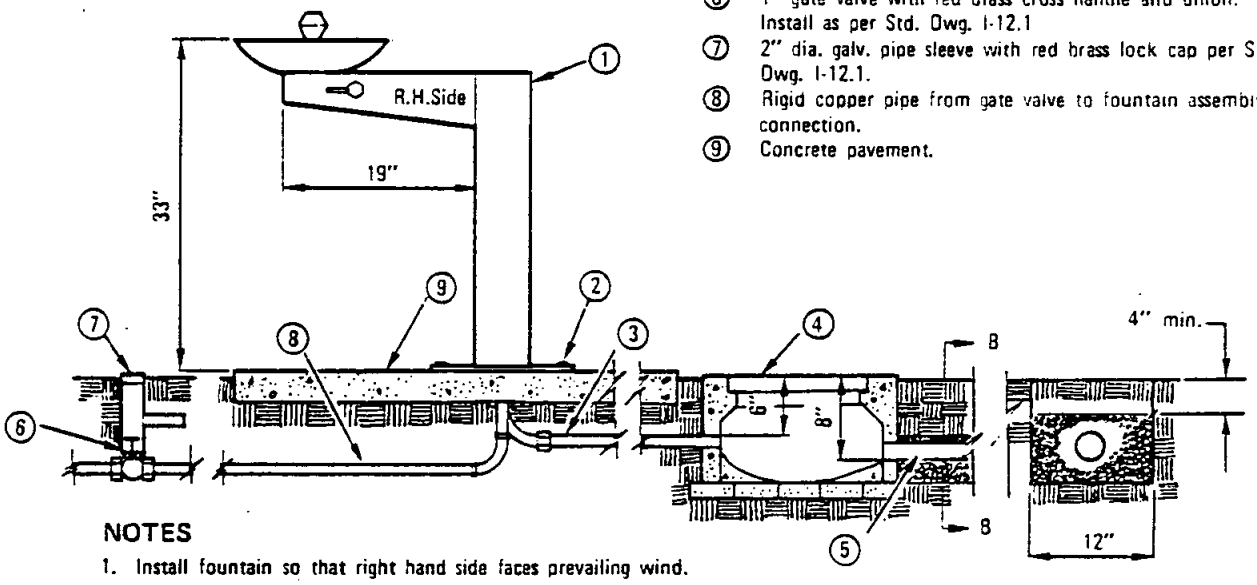

SECT B-B

NOTES

1. Install fountain so that right hand side faces prevailing wind.
2. Hand form a concrete bowl at bottom of yard box to facilitate sand clean out.
3. Perforated drain pipe and trench are to drain away from fountain at 1% min. slope. Keep drain in lawn areas.
4. Item no. 6 is a one inch gate valve. Use red brass bushing reducers to adapt to feed pipe.

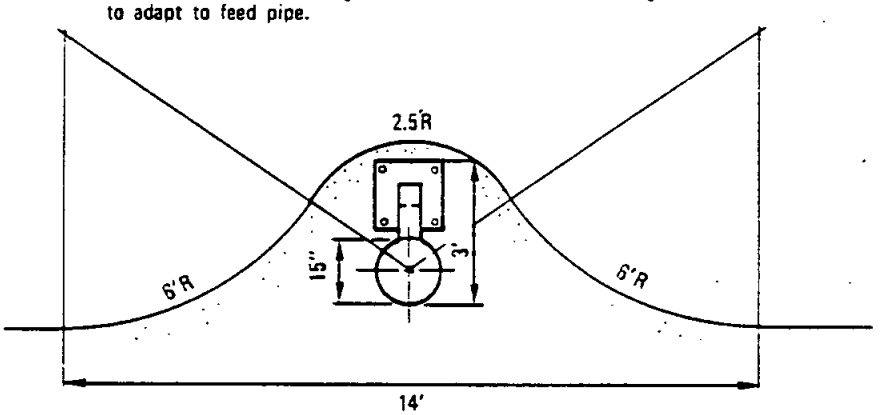

TYPICAL PLAN

LEGEND ON PLANS

RECOMMENDED BY THE SAN DIEGO REGIONAL STANDARDS COMMITTEE Chairman C.E. 013768 Date Oct 1982	SAN DIEGO REGIONAL STANDARD DRAWING	Revision	By	Approved	Date
DRAWING NUMBER M-18	DRINKING FOUNTAIN				

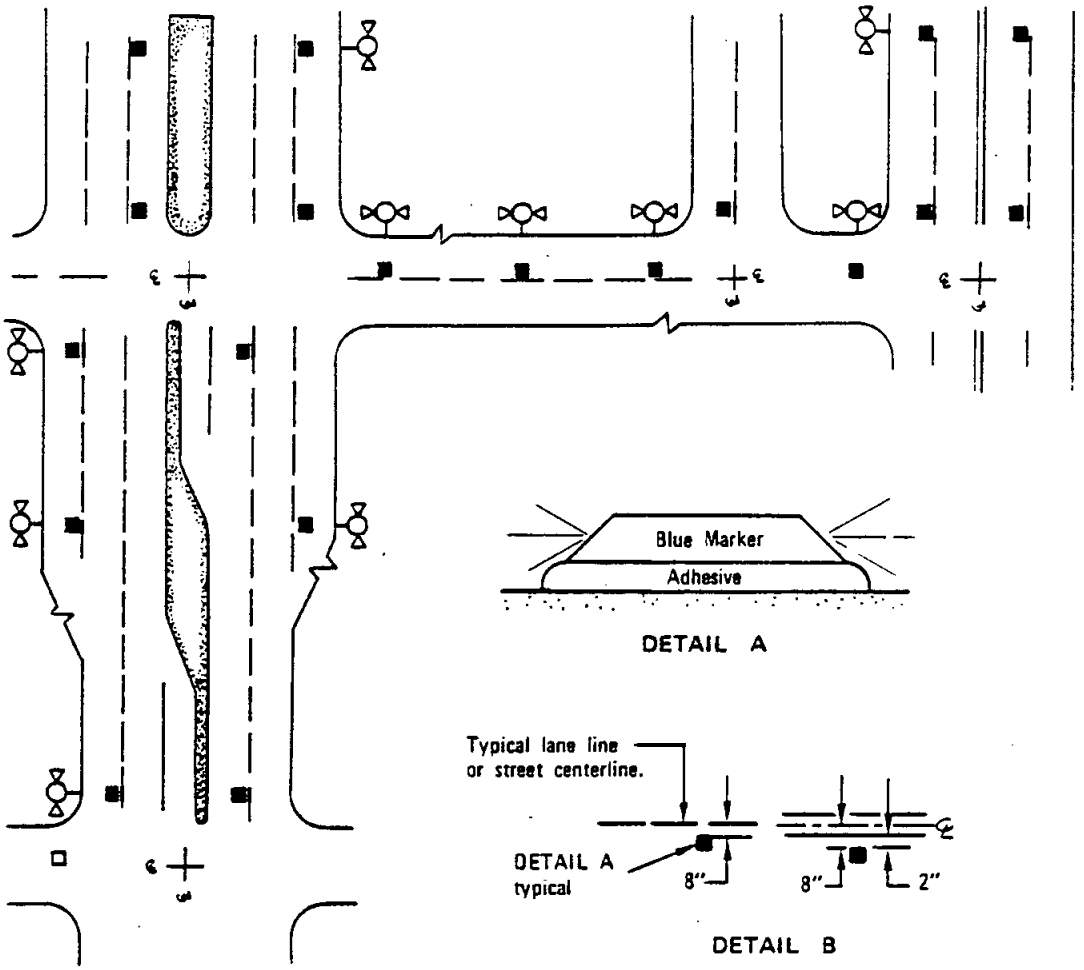

MARKERS – Shall be blue 2-way stimsonite lifelite 88AB or equal.

ADHESIVE – An ample amount of two part (A&B) epoxy or equal.

SURFACES – Clean and dry prior to installation per manufacturer's recommendations. Install markers with reflective surfaces facing oncoming vehicles and offset 2" from lane lines toward fire hydrant.

NOTES:

1. Fire Department will provide location(s) for all markers in PRD's, Commercial Lots and other areas outside of Public Right of Way.
2. Markers must be installed at all new and relocated hydrants and within all resurfacing projects.
3. For streets without lane lines or streets with raised pavement markers and no painted lane lines, install markers on centerline or in line with existing markers.

LEGEND ON PLANS

Marker ■

Fire Hydrant

Revision		Approved	Date

SAN DIEGO REGIONAL STANDARD DRAWING

FIRE HYDRANT MARKERS

RECOMMENDED BY THE SAN DIEGO REGIONAL STANDARDS COMMITTEE

Harry P. Holt Oct 1982

Chairman R.C.E. C13768 Date

DRAWING NUMBER M-19

SEWERAGE SYSTEMS

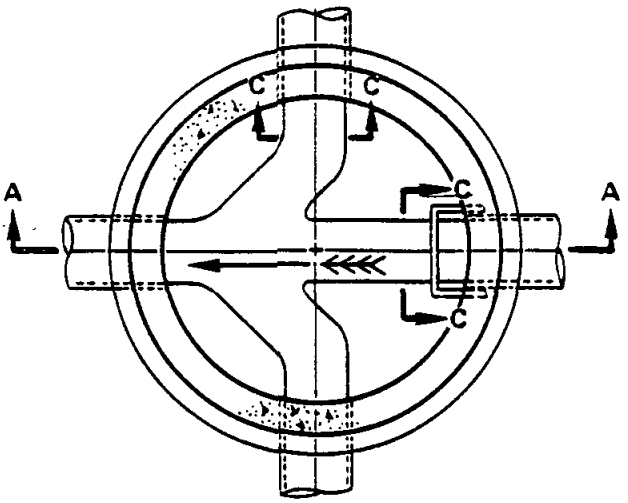

SECTION B–B

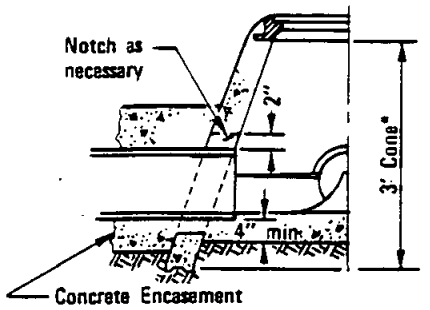

HALF SECTION SHALLOW MANHOLE

* Either Concentric or Eccentric Cone may be used.

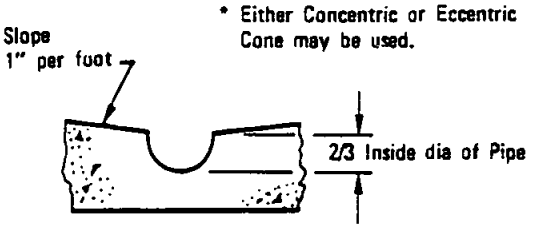

SECTION C–C

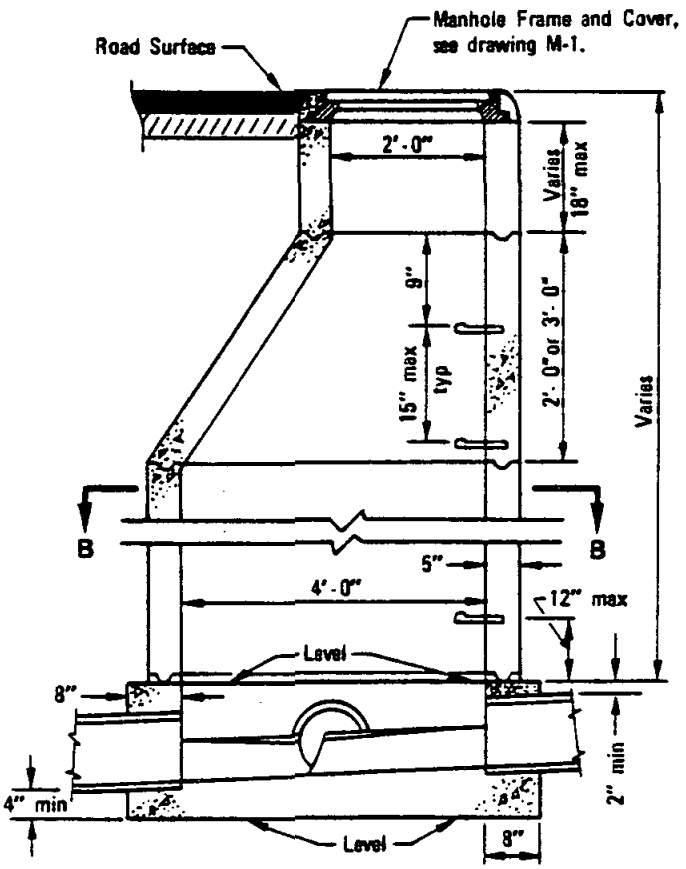

SECTION A–A

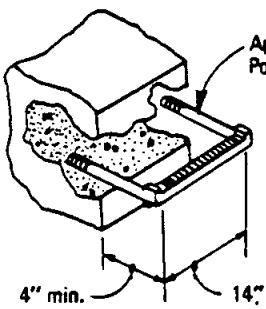

STEP DETAIL

NOTES:

1. Manhole frame and all joints shall be set in Class "C" mortar.
2. All precast components shall be manufactured in accordance with ASTM C-478 except step spacing.
3. Vertical wall of cone shall be on the upstream side of the manhole.
4. Concrete base shall be 564-C-3000.
5. Approved water stop required for plastic pipe connections.
6. Flexible pipe joints shall be required within 12" of inside face of manhole, except for plastic pipe.
7. Precast base permitted as approved by Agency.

LEGEND ON PLANS

—○— - —

M.H. No. 2

Revision	By	Approved	Date
Step Det.	[illegible]	O.S.	7-79
Note 6	TRP	M.B.	10-82

SAN DIEGO REGIONAL STANDARD DRAWING

MANHOLE 4' x 2' DIAMETER

RECOMMENDED BY THE SAN DIEGO REGIONAL STANDARDS COMMITTEE

[illegible] Dec. 1975

Coordinator R.C.E. 19807 Date

DRAWING NUMBER S-1.1

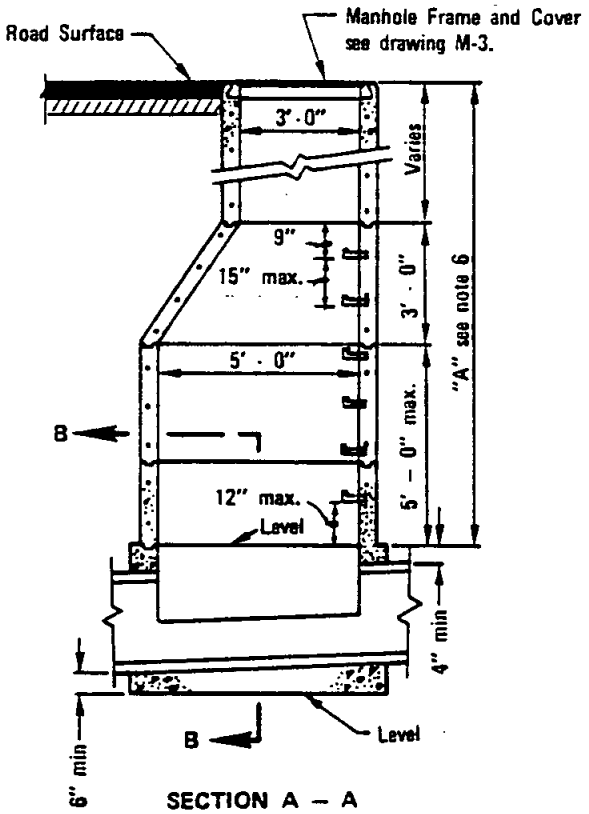

SECTION A – A

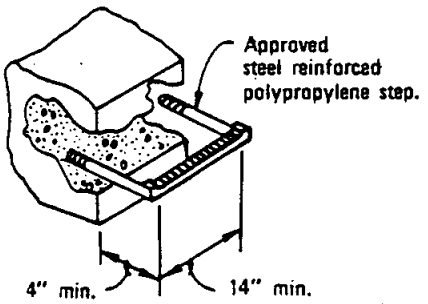

STEP DETAIL

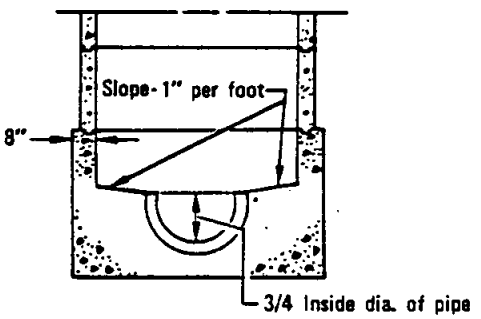

SECTION B – B

NOTES:-

1. Manhole frame and all joints shall be set in Class "C" motar.
2. All precast components shall be manufactured in accordance with ASTM C-478.
3. Vertical wall of cone shall be on the upstream side of the manhole.
4. Concrete base shall be 564-C-3000.
5. Approved water stop required for plastic pipe connections.
6. Precast sections shall be used within dimension "A" as required, in order of preference listed:
   A. Cone (notched for pipe if dimension "A" is less than 3').
   B. 6" to 24" of 3' diameter grade rings.
   C. 5' diameter shaft to maximum height of 60".
   D. Additional 3' diameter risers.
7. Flexible pipe joints shall be required within 12" of inside face of manhole except for plastic pipe.

LEGEND ON PLANS

M.H. No. 2

RECOMMENDED BY THE SAN DIEGO REGIONAL STANDARDS COMMITTEE

Coordinator R.C.E. 19807 — Dec. 1975 Date

DRAWING NUMBER S-2.1

SAN DIEGO REGIONAL STANDARD DRAWING

MANHOLE 5'x 3' DIAMETER

Revision	By	Approved	Date
Note 7	TAP	M.B.	10-82

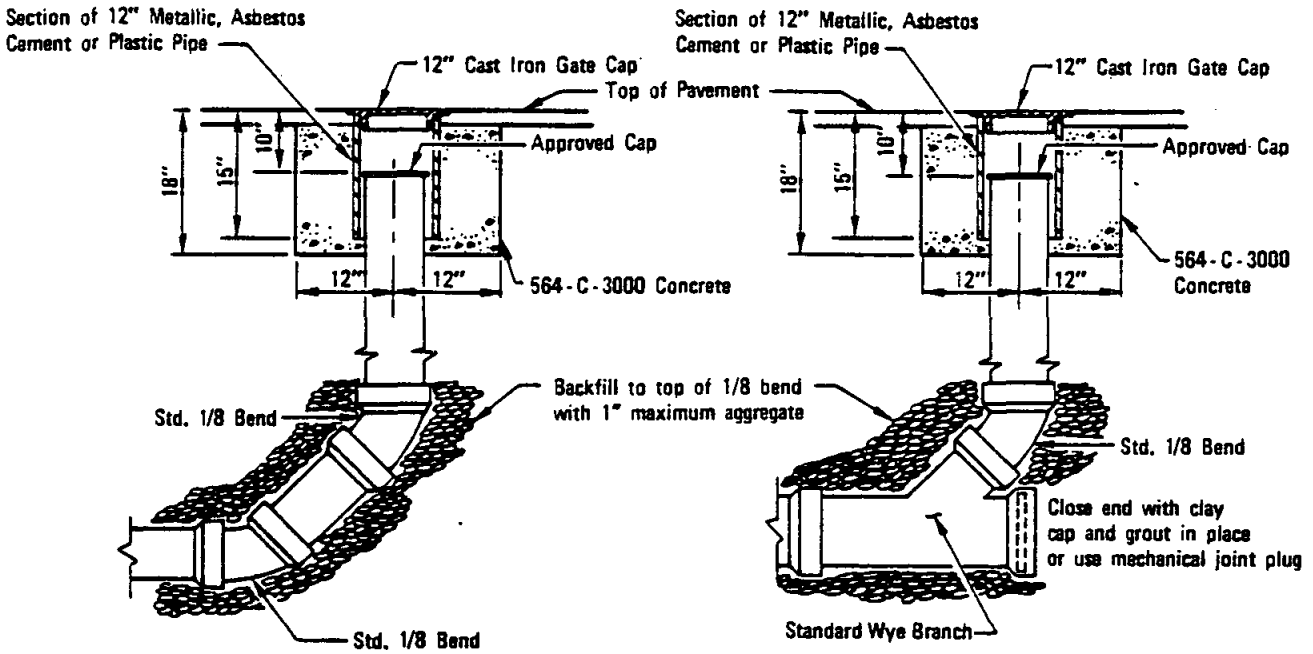

TYPE A

TYPE B

NOTES

1. Gate cap shall be labeled "Sewer".
2. Cleanouts may be used for either V.C.P. or plastic sewer mains.
3. Riser to be same diameter as sewer main.

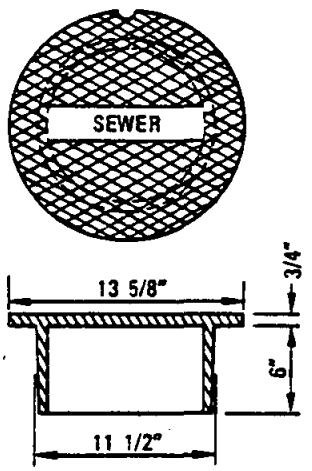

GATE CAP
(Heavy Duty)

LEGEND ON PLANS

Revision	By	Approved	Date

SAN DIEGO REGIONAL STANDARD DRAWING

SEWER MAIN CLEANOUT

RECOMMENDED BY THE SAN DIEGO REGIONAL STANDARDS COMMITTEE

Coordinator R.C.E. 19807 — Dec. 1975 Date

DRAWING NUMBER S-3

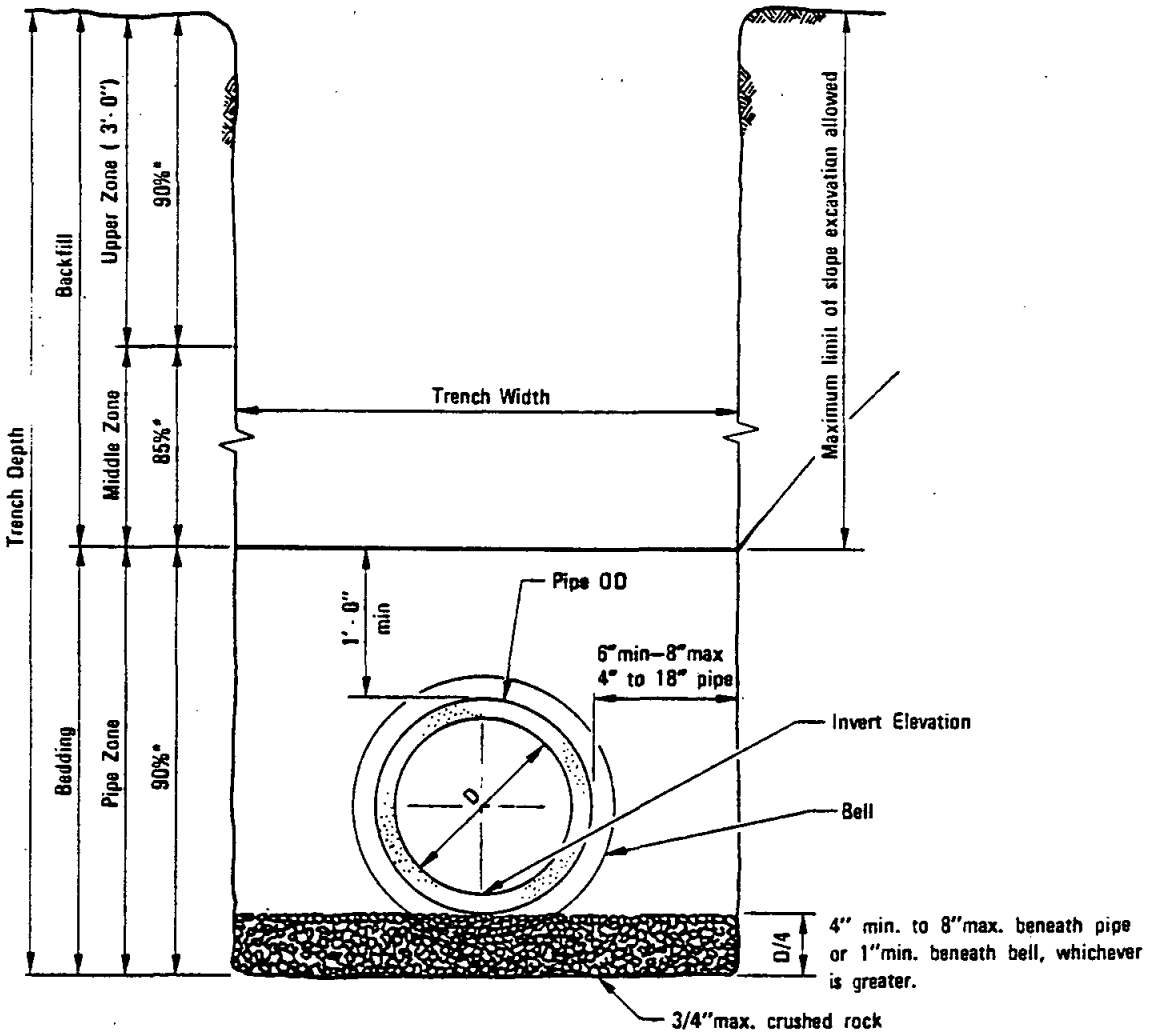

NOTES

1. For trenching in improved streets, see Standard Drawings G-24.1 or G-25.1 for trench resurfacing.
2. (*) indicates minimum relative compaction.
3. Minimum depth of cover from the top of pipe to finish grade for all sanitary sewer installations shall be 3'. For cover less than 3', see Standard Drawing S-7.1 for concrete encasement.

RECOMMENDED BY THE SAN DIEGO REGIONAL STANDARDS COMMITTEE Coordinator R.C.E. 19807 Dec. 1975 Date	SAN DIEGO REGIONAL STANDARD DRAWING	Revision	By	Approved	Date
		Bedding	TRP	M. B.	10-82
DRAWING NUMBER S-4.1	PIPE BEDDING AND TRENCH BACKFILL FOR SEWERS (STD. INSTALLATION)				

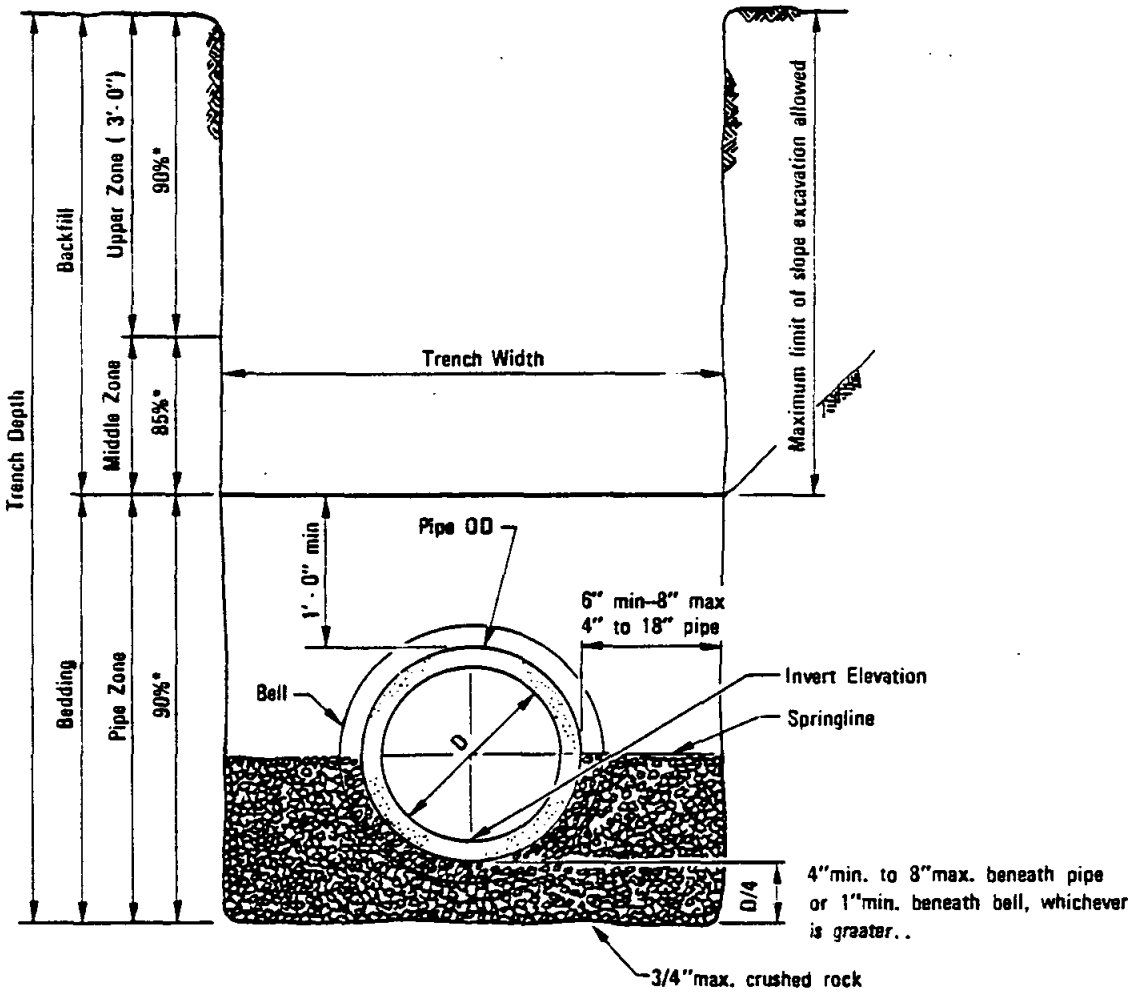

NOTES

1. For trenching in improved streets, see Standard Drawings G-24.1 or G-25.1 for trench resurfacing.
2. (*) indicates minimum relative compaction.
3. Minimum depth of cover from the top of pipe to finish grade for all sanitary sewer installations shall be 3'. For cover less than 3', see Standard Drawing S-7.1 for concrete encasement.

Revision	By	Approved	Date
Bedding	TRA	M.B.	10-82

SAN DIEGO REGIONAL STANDARD DRAWING

PIPE BEDDING AND TRENCH BACKFILL FOR SEWERS (ROCK TO SPRINGLINE)

RECOMMENDED BY THE SAN DIEGO REGIONAL STANDARDS COMMITTEE

Coordinator R.C.E. 19807 — Dec. 1975 Date

DRAWING NUMBER S-5.1

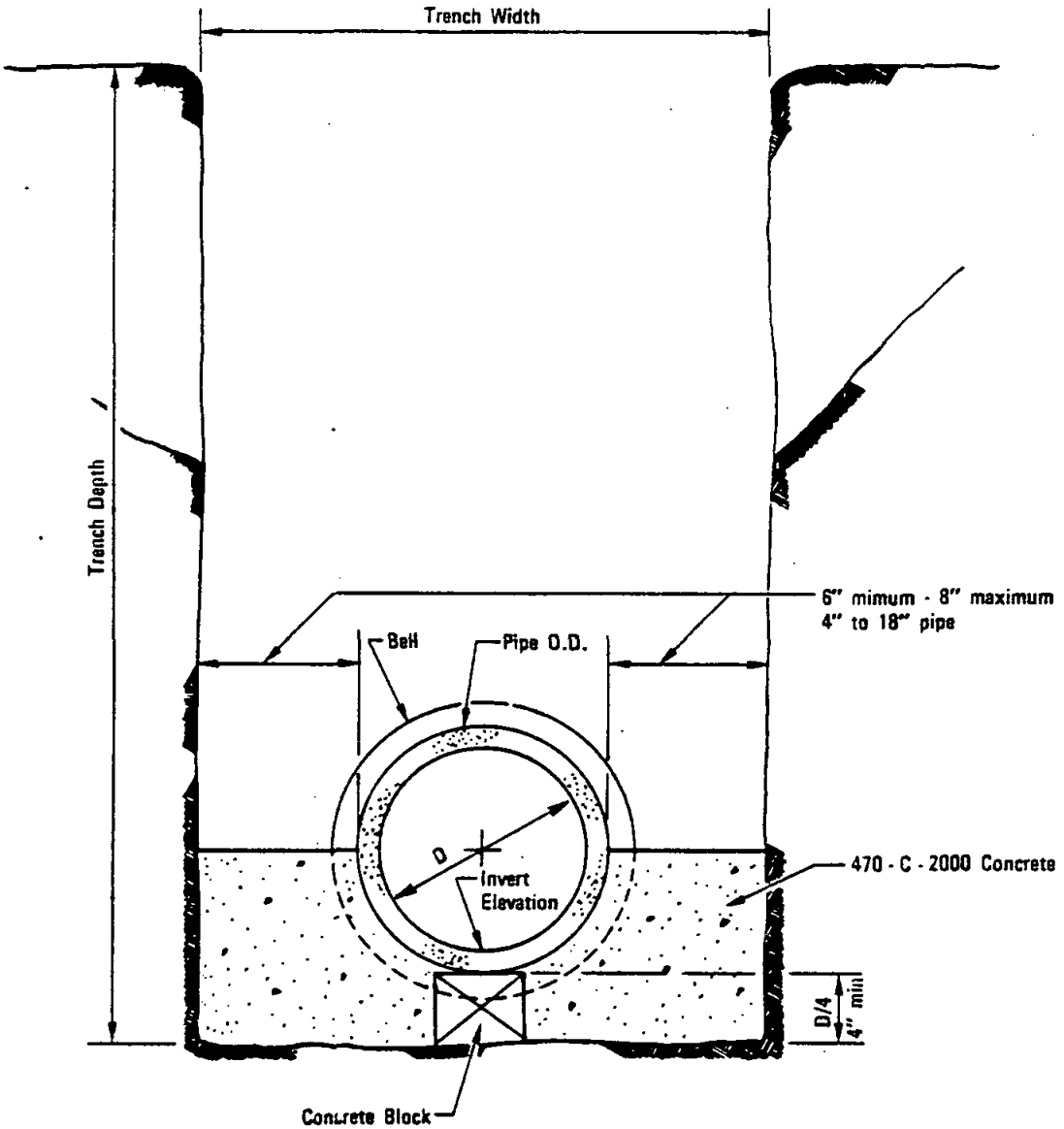

SECTION

LEGEND ON PLANS

RECOMMENDED BY THE SAN DIEGO REGIONAL STANDARDS COMMITTEE Coordinator R.C.E. 19807 Date Dec. 1979	SAN DIEGO REGIONAL STANDARD DRAWING	Revision	By	Approved	Date
	CONCRETE CRADLE				
DRAWING NUMBER S-6					

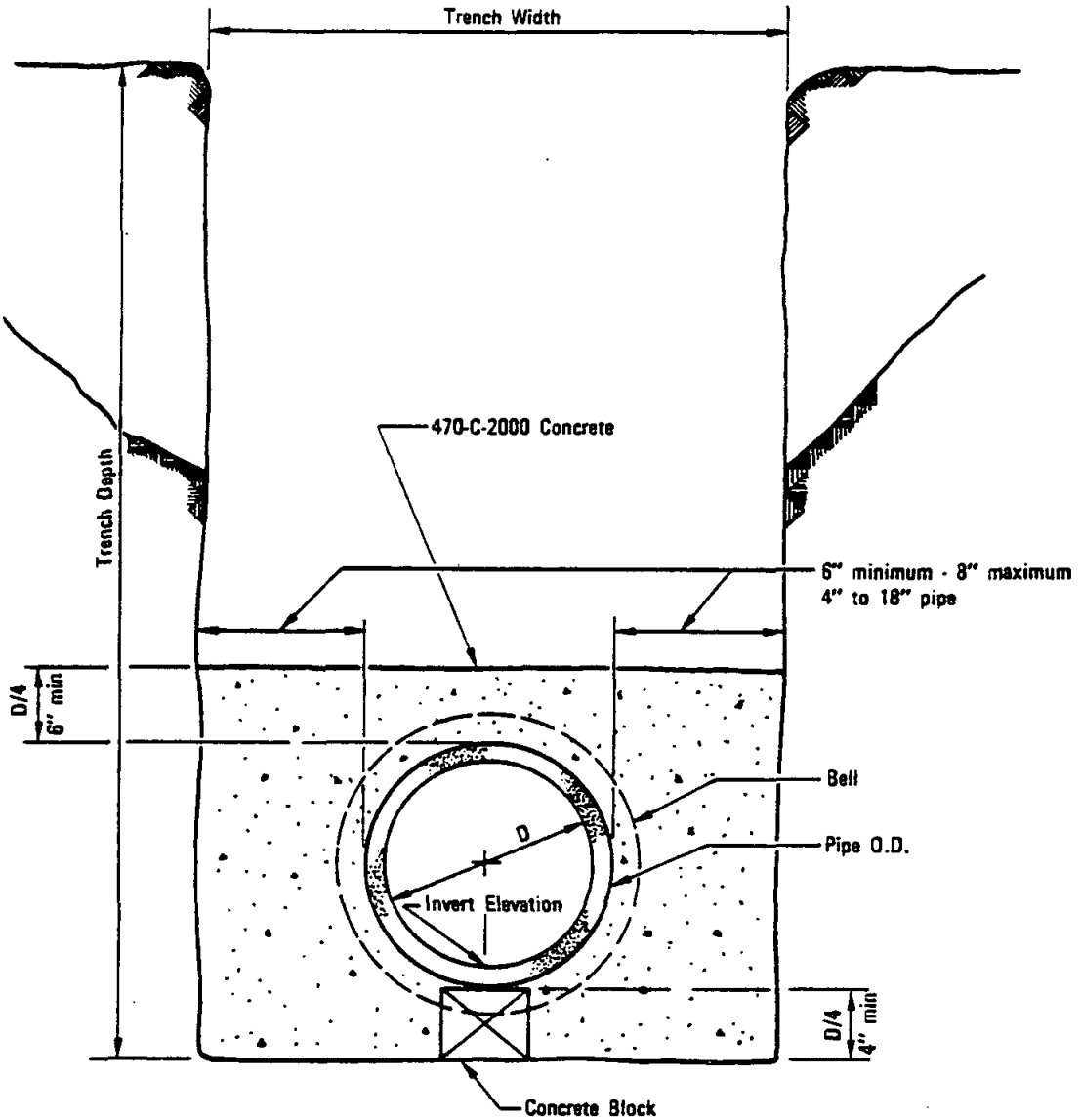

SECTION

NOTE:

Encase pipe to the nearest flexible joint.

LEGEND ON PLANS

Revision	By	Approved	Date
Note	TRP	M.B.	10-82

SAN DIEGO REGIONAL STANDARD DRAWING

CONCRETE ENCASEMENT

RECOMMENDED BY THE SAN DIEGO REGIONAL STANDARDS COMMITTEE

Coordinator R.C.E. 19807 — Dec. 1975 Date

DRAWING NUMBER S-7.1

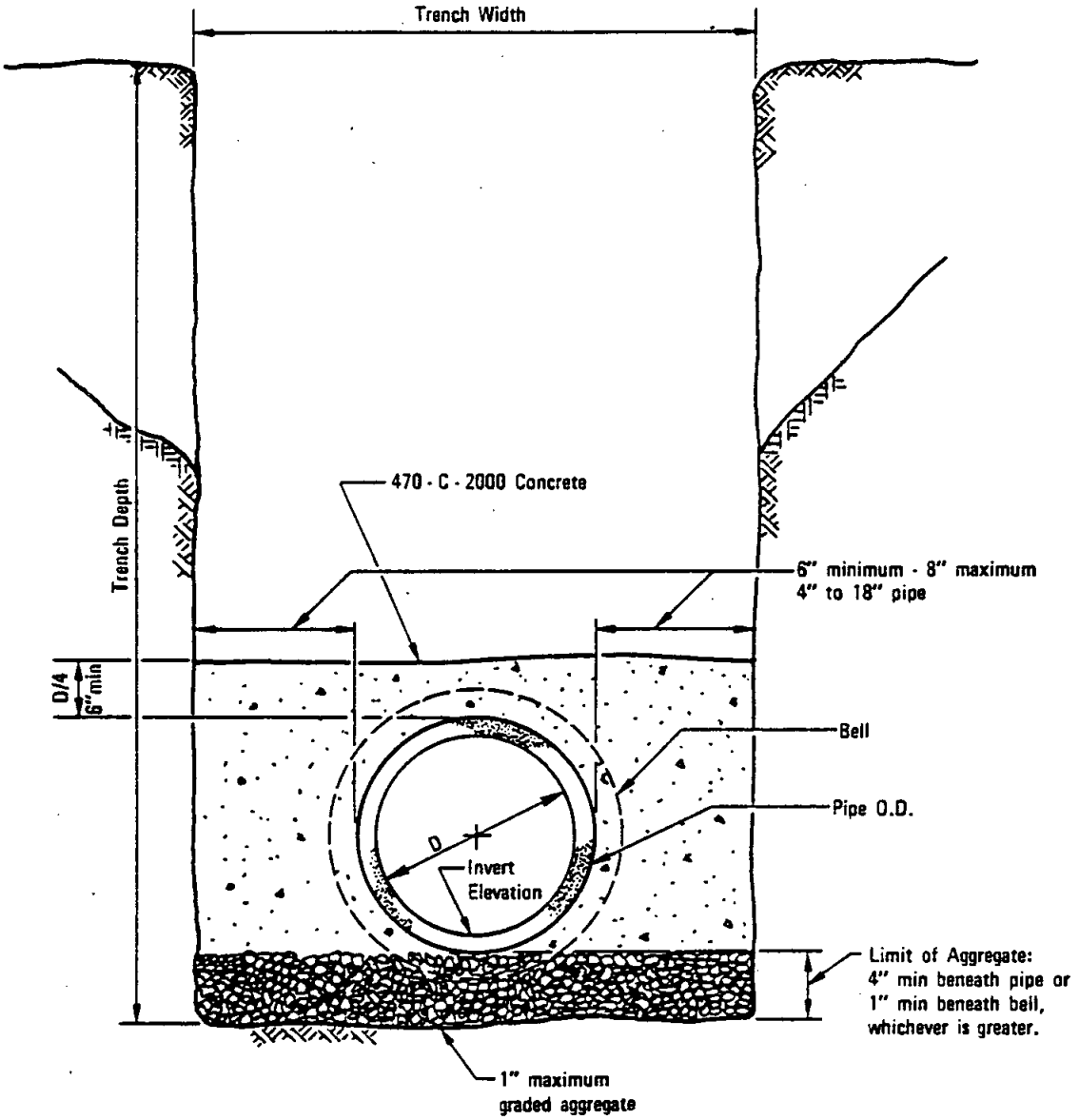

SECTION

LEGEND ON PLANS

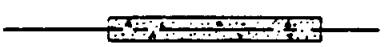

RECOMMENDED BY THE SAN DIEGO REGIONAL STANDARDS COMMITTEE	SAN DIEGO REGIONAL STANDARD DRAWING	Revision	By	Approved	Date
Coordinator R.C.E. 19807 Date Dec. 1975	CONCRETE BACKFILL				
DRAWING NUMBER S-8					

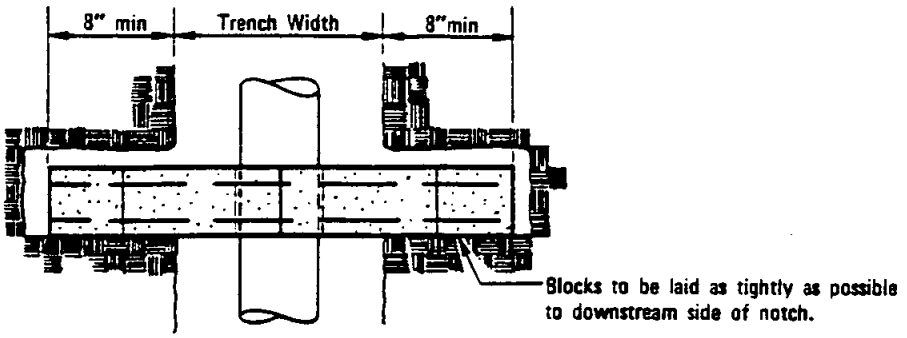

PLAN

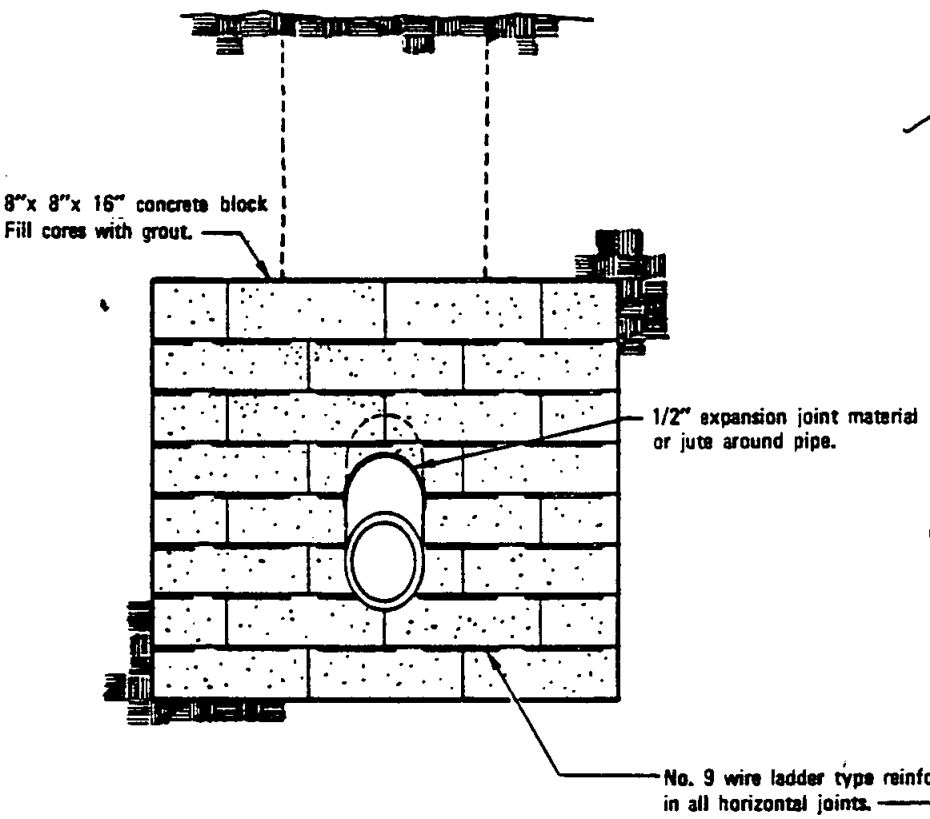

FRONT ELEVATION

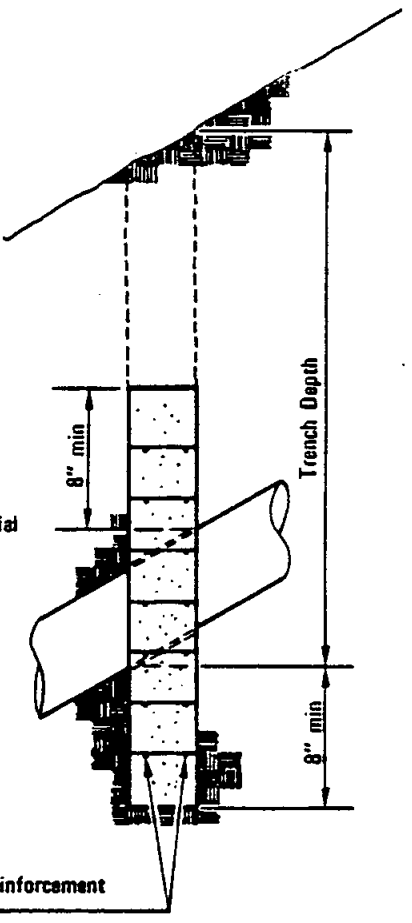

SIDE ELEVATION

LEGEND ON PLANS

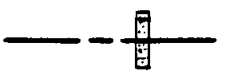

Revision	By	Approved	Date
Expan. jt.	TRP	M.B.	10-82

SAN DIEGO REGIONAL STANDARD DRAWING

CONCRETE ANCHOR

RECOMMENDED BY THE SAN DIEGO REGIONAL STANDARDS COMMITTEE

Coordinator R.C.E. 19807 — Dec. 1975 Date

DRAWING NUMBER S-9.1

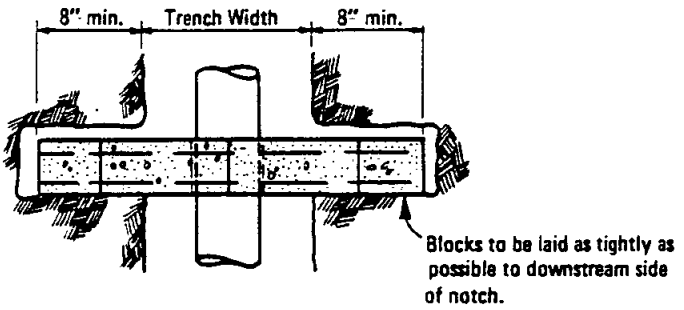

PLAN

NOTES

Type B:

1. No vertical joints permitted.
2. Horizontal joints must overlay by 2 corrugations.
3. Corrugations to run horizontally.
4. Front Elevation and Plan views similar to Type A.

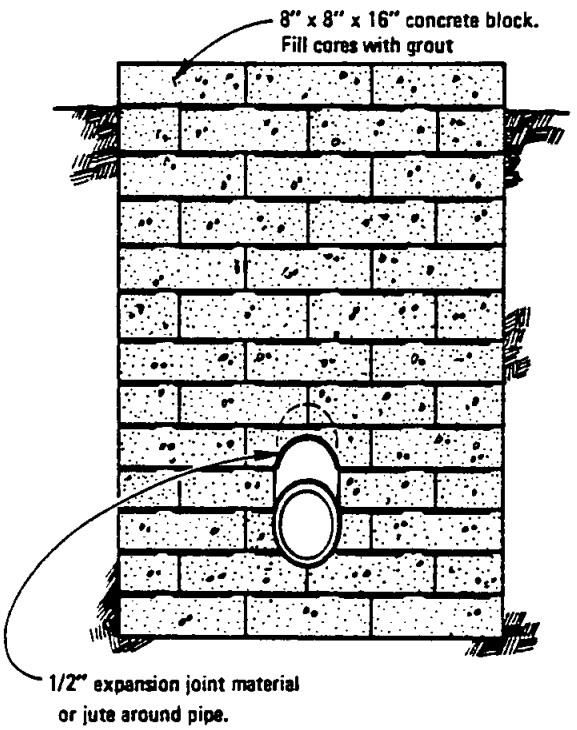

FRONT ELEVATION

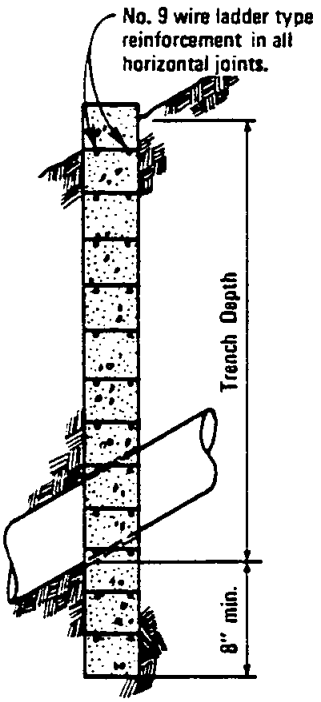

SIDE ELEVATION

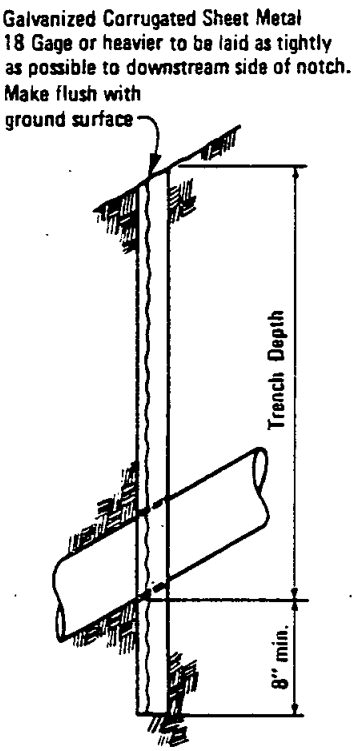

ELEVATION

TYPE A

TYPE B

LEGEND ON PLANS

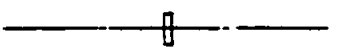

RECOMMENDED BY THE SAN DIEGO REGIONAL STANDARDS COMMITTEE Coordinator R.C.E. 19807 Dec. 1975 Date	SAN DIEGO REGIONAL STANDARD DRAWING	Revision	By	Approved	Date
		Type A		D. S.	7-79
		Chg. notes		M.B.	10-82
DRAWING NUMBER S-10.1	CUTOFF WALL				

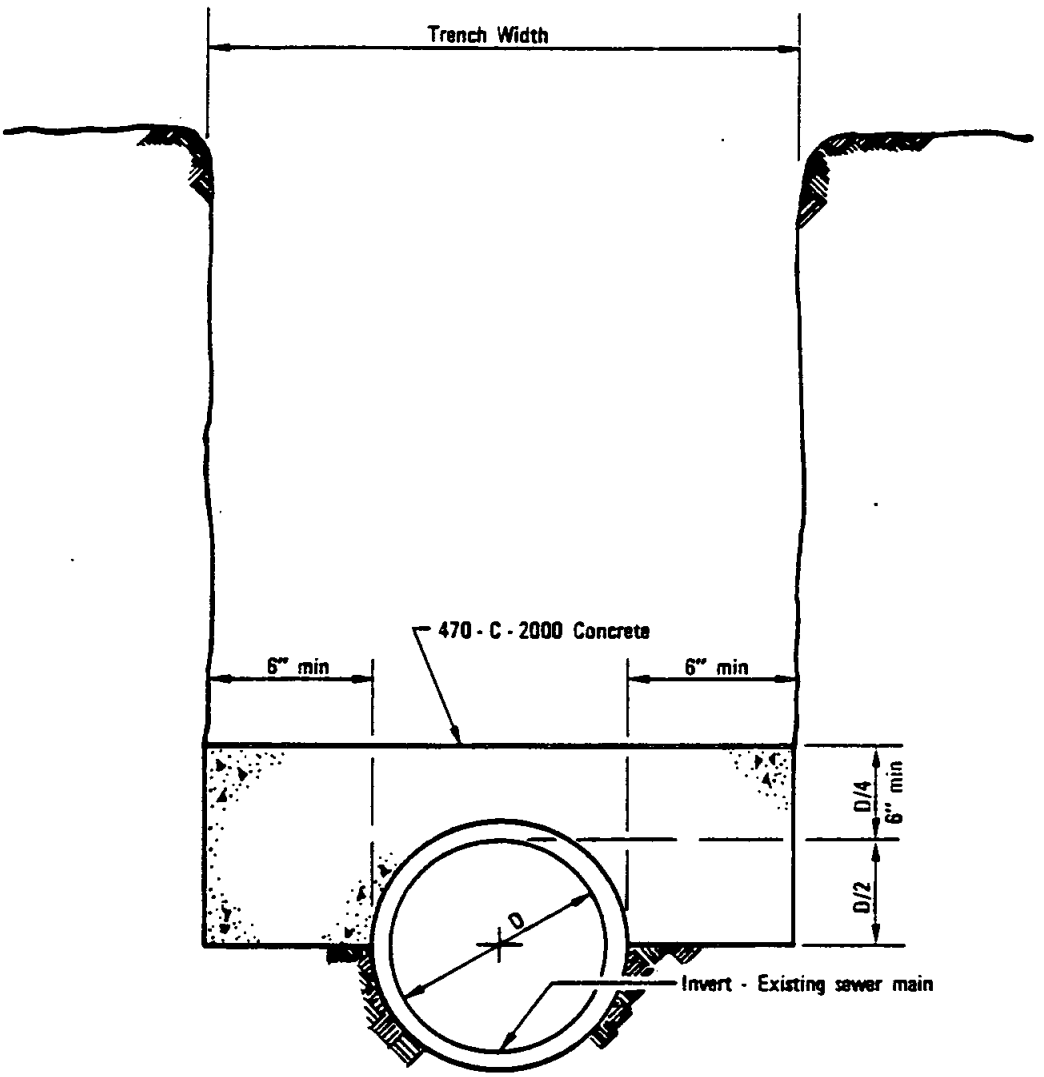

SECTION

LEGEND ON PLANS

Revision	By	Approved	Date

SAN DIEGO REGIONAL STANDARD DRAWING

CONCRETE PROTECTION FOR EXISTING SEWER PIPE

RECOMMENDED BY THE SAN DIEGO REGIONAL STANDARDS COMMITTEE

Coordinator R.C.E. 19867 Dec. 1975 Date

DRAWING NUMBER S-11

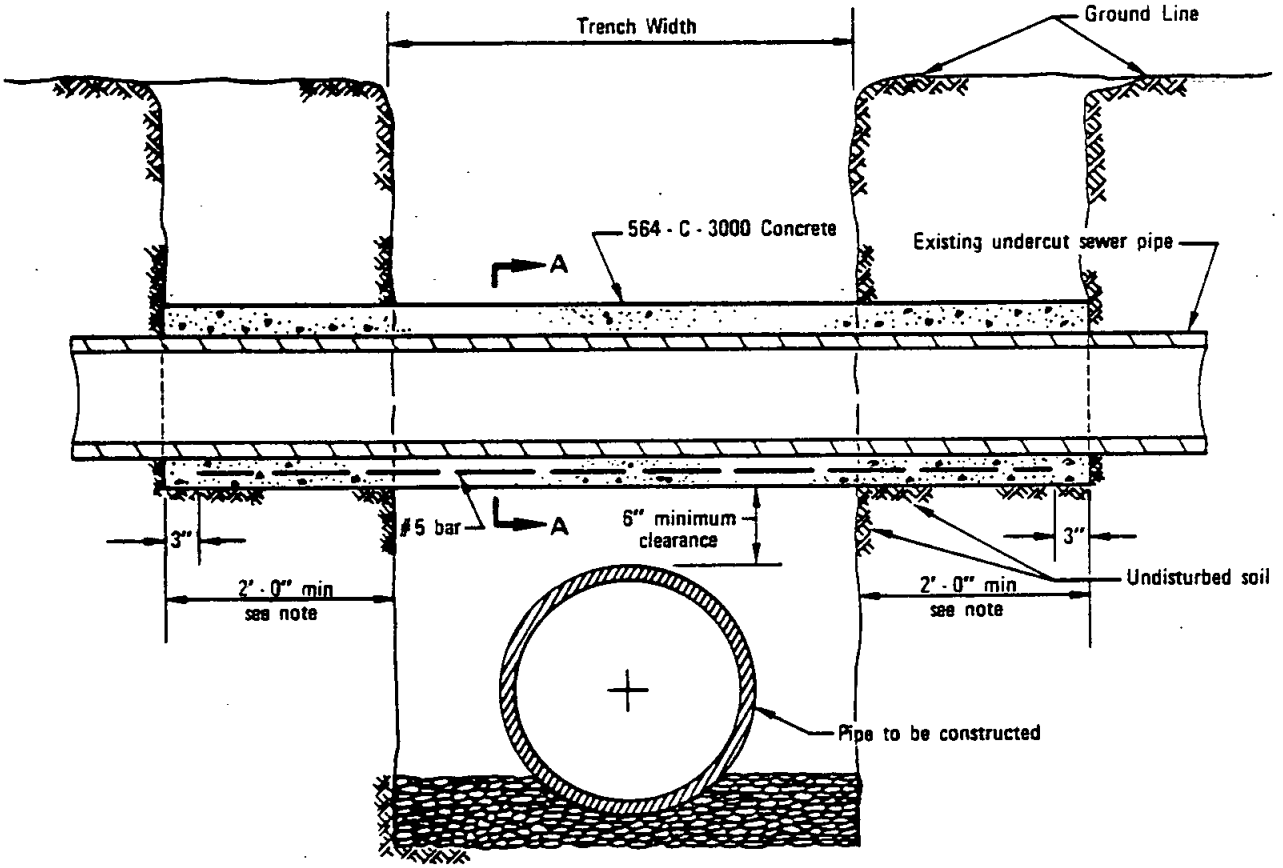

TYPICAL SECTION

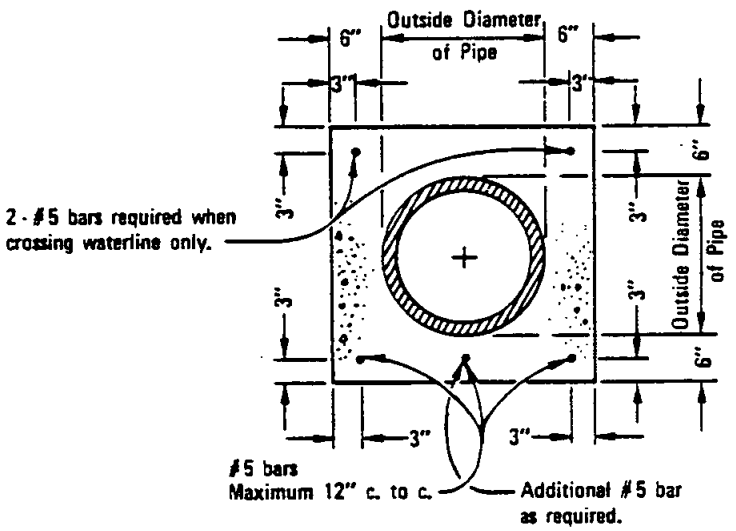

SECTION A–A

LEGEND ON PLANS

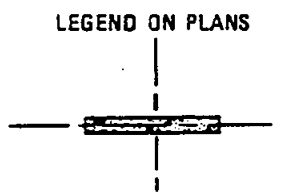

NOTE
For water line construction encasement shall extend to first joint beyond 2 feet at both sides of trench or to a distance of 4 feet, whichever is less.

RECOMMENDED BY THE SAN DIEGO REGIONAL STANDARDS COMMITTEE Dec. 1975 Coordinator R.C.E. 19887 Date	SAN DIEGO REGIONAL STANDARD DRAWING	Revision	By	Approved	Date
DRAWING NUMBER S-12	CONCRETE SUPPORT FOR UNDERCUT SEWER PIPE				

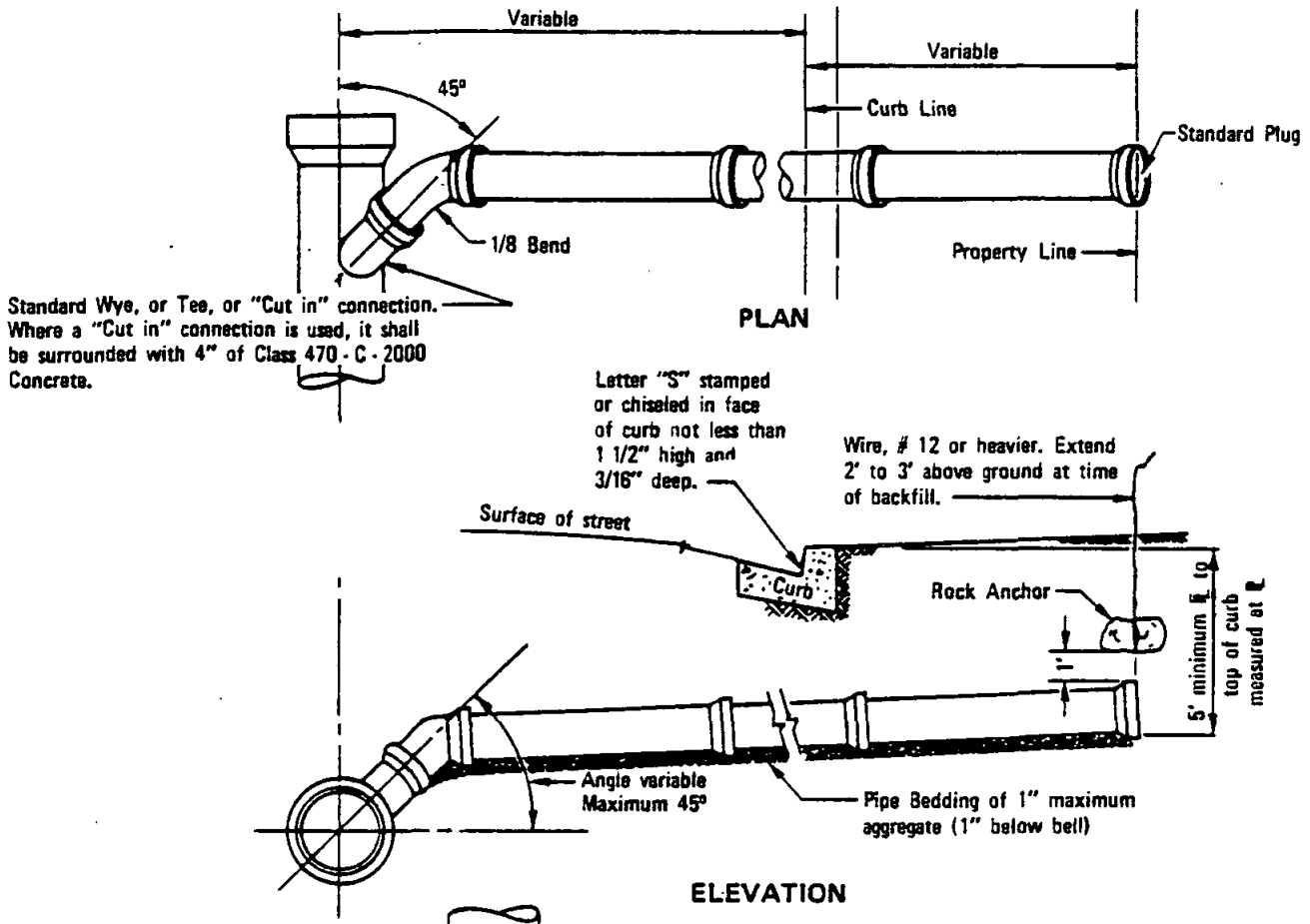

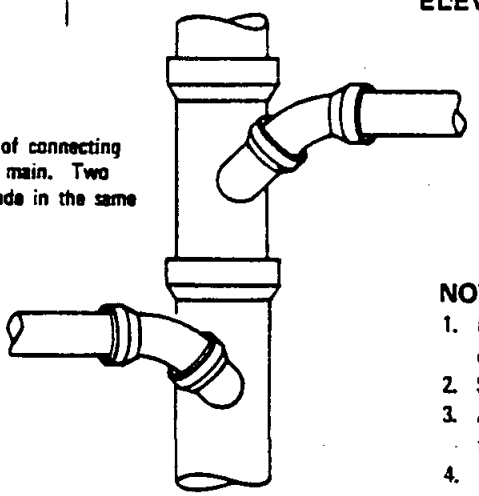

Detail showing the manner of connecting opposite laterals to a sewer main. Two connections shall not be made in the same length of pipe.

NOTES

1. In no case shall a lateral connect to the sewer main directly on top of the pipe.
2. Sewer laterals shall have a minimum slope of 2%.
3. All joints on sewer lateral pipe shall be compression type or approved solvent weld.
4. Lateral shall extend to property line unless otherwise shown on plans.

LEGEND ON PLANS

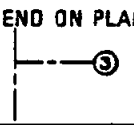

Revision	By	Approved	Date

SAN DIEGO REGIONAL STANDARD DRAWING

HOUSE CONNECTION (SEWER LATERAL)

RECOMMENDED BY THE SAN DIEGO REGIONAL STANDARDS COMMITTEE

Coordinator R.C.E. 19887 Dec. 1975 Date

DRAWING NUMBER S-13

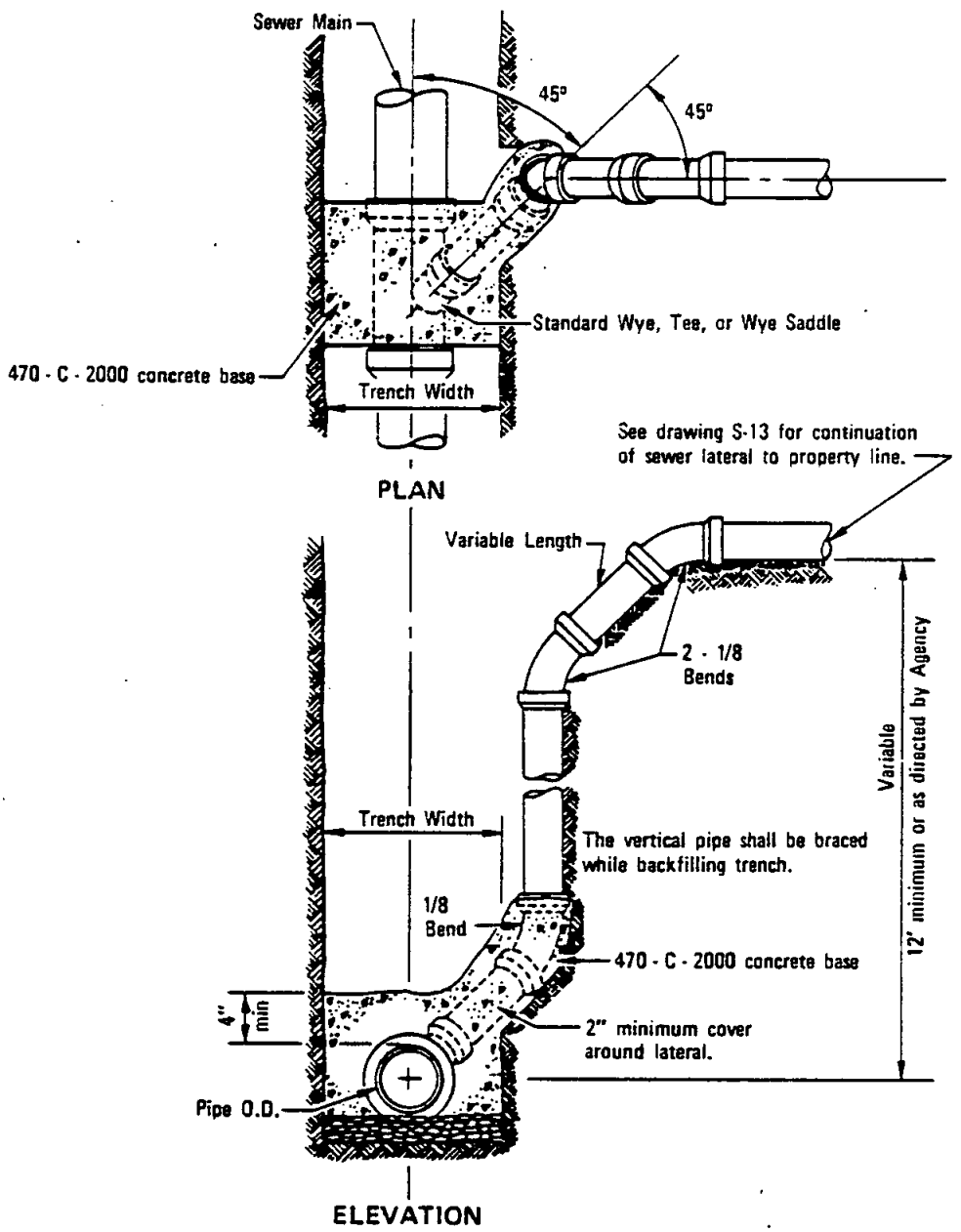

NOTE
All joints on sewer lateral pipe shall be compression type or approved solvent weld.

LEGEND ON PLANS

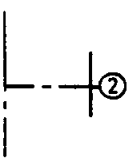

RECOMMENDED BY THE SAN DIEGO REGIONAL STANDARDS COMMITTEE Oct. 1975 Coordinator R.C.E. 19887 Date	SAN DIEGO REGIONAL STANDARD DRAWING	Revision	By	Approved	Date
	DEEP CUT HOUSE CONNECTION (SEWER LATERAL)				
DRAWING NUMBER S-14					

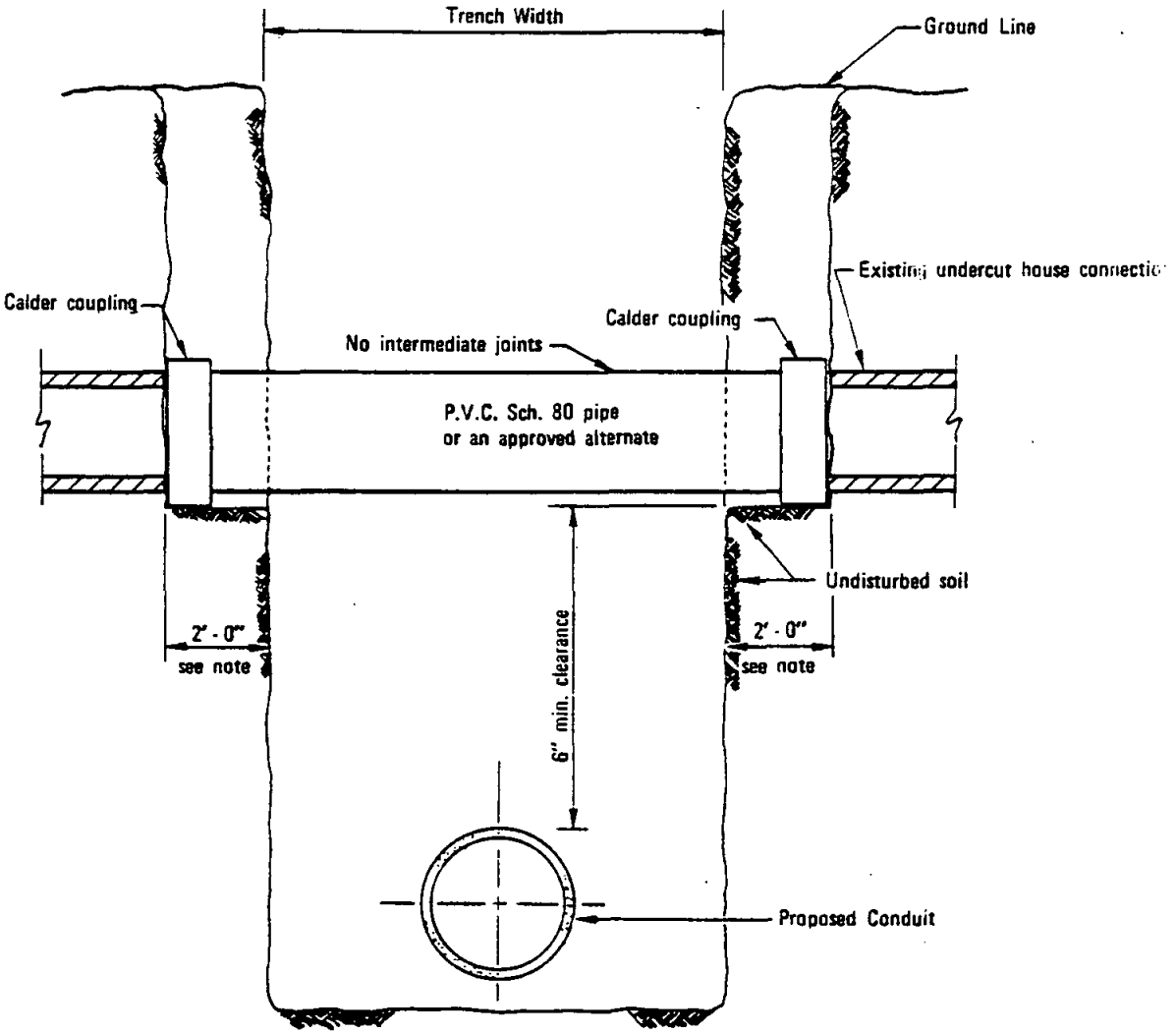

TYPICAL SECTION

NOTE

For water line construction repair pipe shall extend to first joint beyond 2 ft. at both sides of trench or to a distance of 4 ft., whichever is less.

Revision	By	Approved	Date

SAN DIEGO REGIONAL STANDARD DRAWING

HOUSE CONNECTION SEWER REPAIR

RECOMMENDED BY THE SAN DIEGO REGIONAL STANDARDS COMMITTEE

Coordinator R.C.E. 19807 — Dec. 1975 Date

DRAWING NUMBER S-15

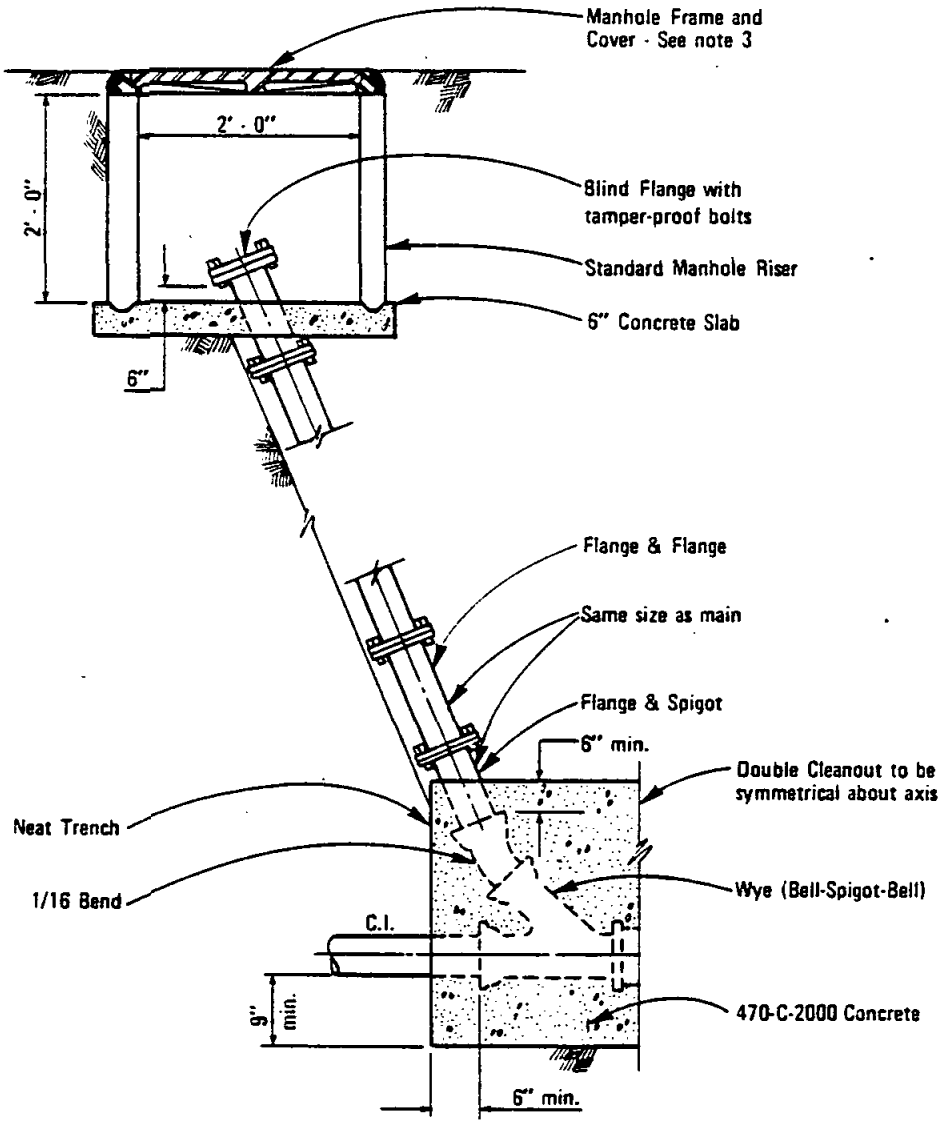

NOTES

1. Similar poly vinyl chloride components may be used in accordance with A.S.T.M. Standard Specification D-3033.
2. Concrete slab to be 564-C-3000
3. Use heavy duty manhole frame and cover, Std. Dwg. M-1, in areas subject to vehicular traffic; use light duty manhole frame and cover, Std. Dwg. M-2, in all other locations.

LEGEND ON PLANS

C.O.

RECOMMENDED BY THE SAN DIEGO REGIONAL STANDARDS COMMITTEE Coordinator R.C.E. 25291 Date	SAN DIEGO REGIONAL STANDARD DRAWING	Revision	By	Approved	Date
DRAWING NUMBER S-16	CLEANOUT-SEWER FORCE MAIN				

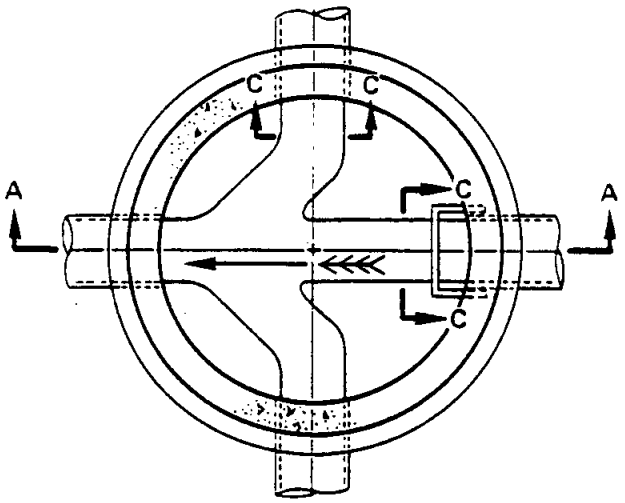

SECTION B–B

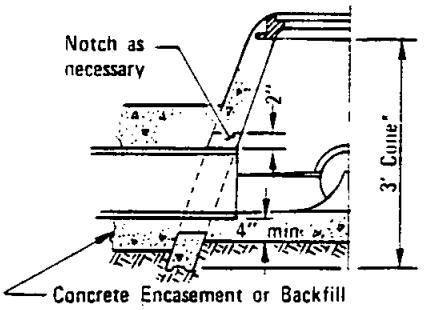

HALF SECTION SHALLOW MANHOLE

* Either Concentric or Eccentric Cone may be used.

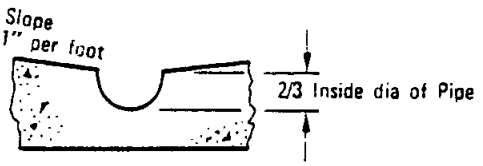

SECTION C–C

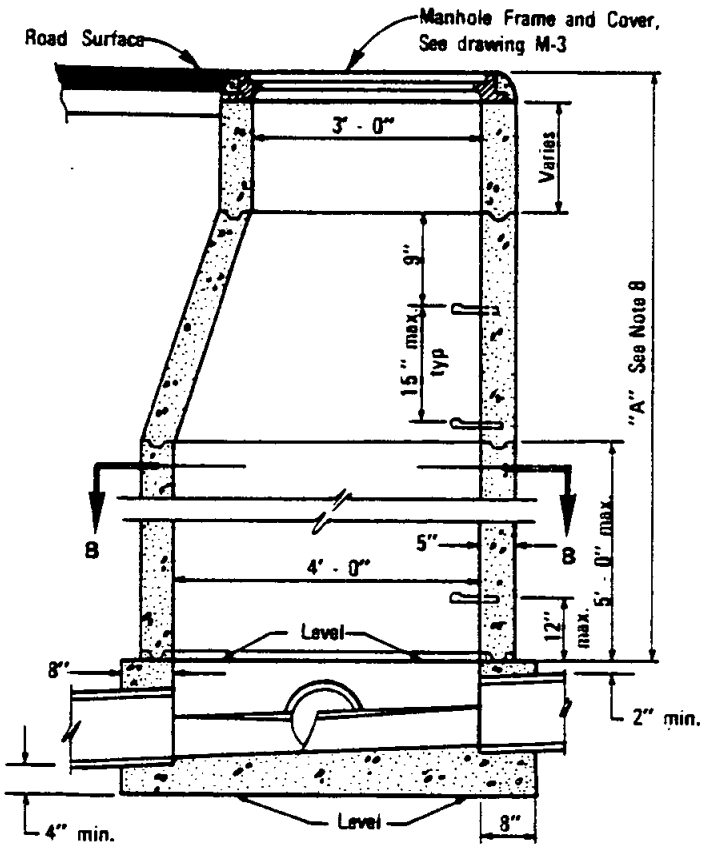

SECTION A-A

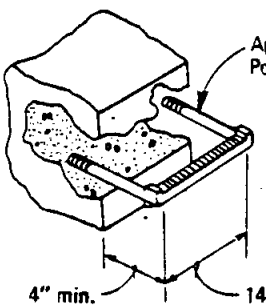

STEP DETAIL

NOTES

1. Manhole frame and all joints shall be set in Class "C" mortar.
2. All precast components shall be manufactured in accordance with ASTM C-478 except step spacing.
3. Vertical wall of cone shall be on the upstream side of the manhole.
4. Concrete base shall be 564-C-3000.
5. Approved water stop required for plastic pipe connections.
6. Flexible pipe joints shall be required within 12" of inside face of manhole. (except for plastic pipe)
7. Precast base permitted as approved by Agency.
8. Precast sections shall be used within dimension "A" as required, in order of preference listed:
   A. Cone (notched for pipe if dimension "A" is less than 3').
   B. 6" to 24" of 3' diameter grade rings.
   C. 4' diameter shaft to maximum height of 60".
   D. Additional 3' diameter risers.

LEGEND ON PLANS

—○— - ——

M.H. No. 2

Revision		Approved	Date
Notes	KRP	M.B.	10-82

SAN DIEGO REGIONAL STANDARD DRAWING

MANHOLE - 4' x 3' DIAMETER
(FOR 15" MAX. DIA. PIPE)

RECOMMENDED BY THE SAN DIEGO REGIONAL STANDARDS COMMITTEE

Coordinator R.C.E. 25291 Date

DRAWING NUMBER S-17.1

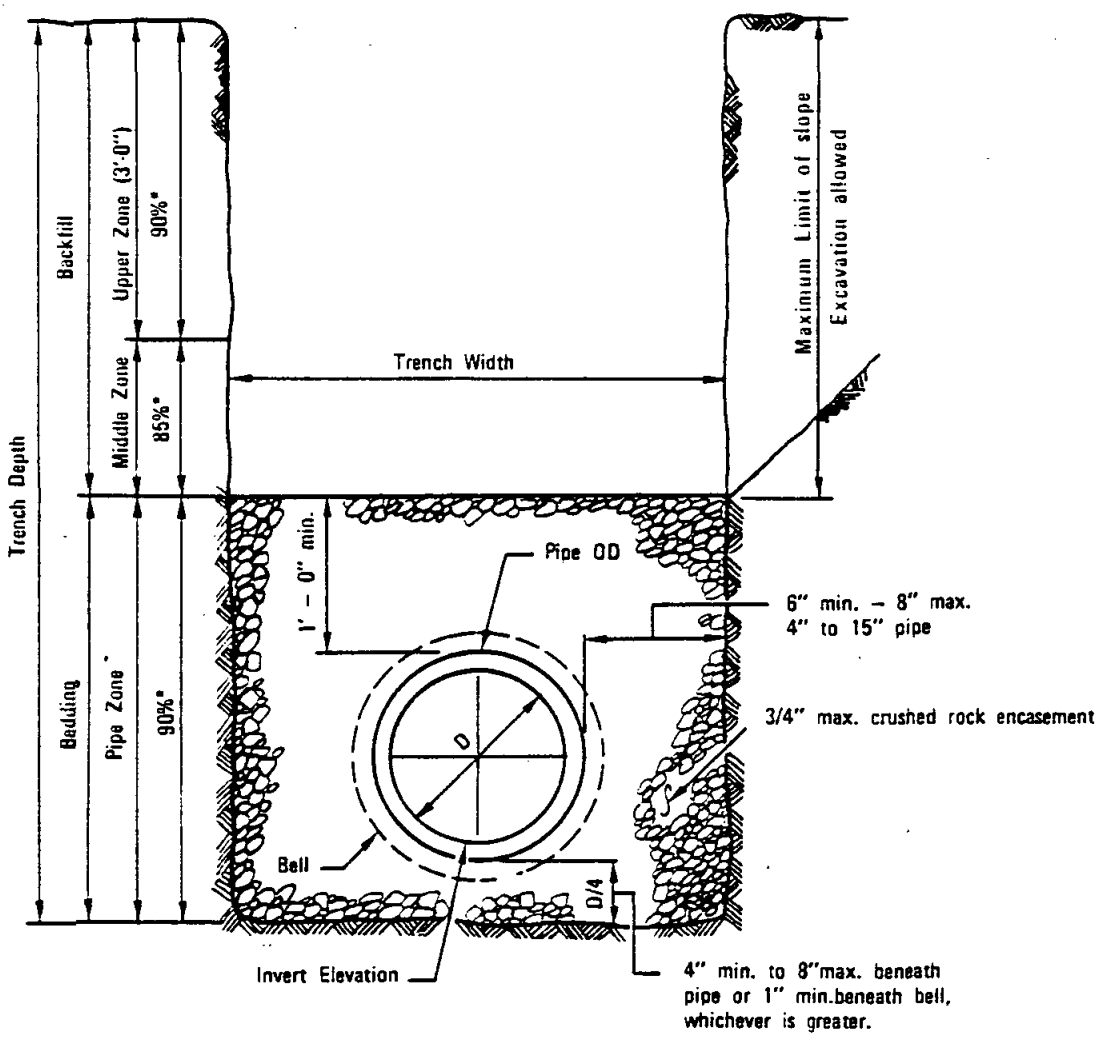

NOTE :

1. (*) Indicates minimum relative compaction.

RECOMMENDED BY THE SAN DIEGO REGIONAL STANDARDS COMMITTEE Chairman R.C.E. C13758 Date Oct 1982	SAN DIEGO REGIONAL STANDARD DRAWING	Revision	By	Approved	Date
DRAWING NUMBER S-18	PIPE BEDDING AND TRENCH BACKFILL IN ROCK ENVELOPE				

WATER SYSTEMS

NOTES

1. Service clamp and gasket required on 4" A.C. pipe.
2. Tap not permitted in milled sections of A.C. pipe.

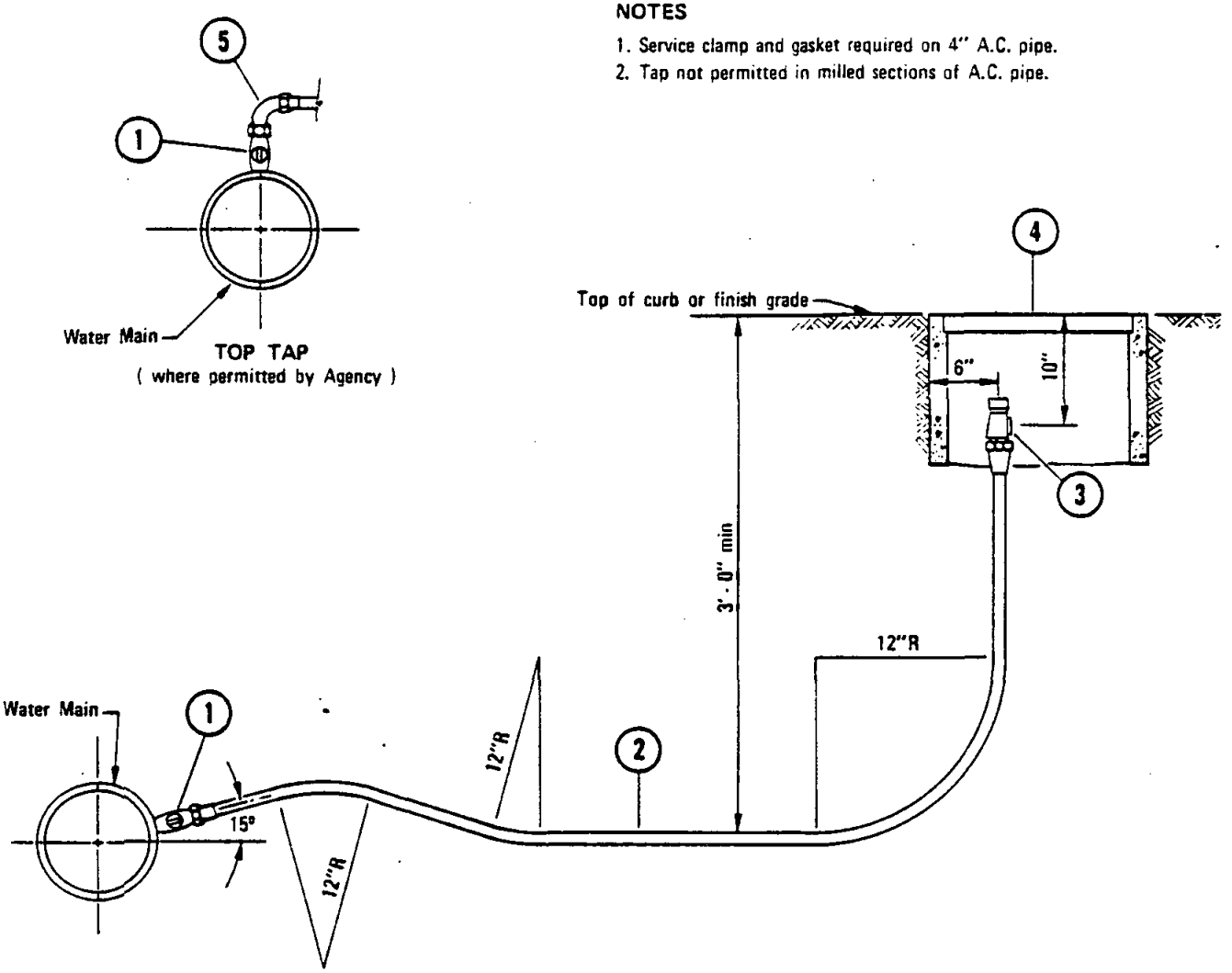

1. Bronze Corporation Stop (installed with key on side and open tap) and Adaptor as required by Agency.
   Note: On steel mains use clamp or weld on coupling as required by Agency.
   Install insulating bushing as required by Agency.
2. Copper Tubing or Plastic Pipe (no intermediate joints permitted without approval of the Agency).
3. Bronze Angle Service Stop with Locking Device and Meter Coupling attached.
4. Meter Box (see Standard Drawing W-15 for location).
5. 90° Ell

LEGEND ON PLANS

1" — W

Revision	By	Approved	Date
Notes		D.S.	7-79

SAN DIEGO REGIONAL STANDARD DRAWING

1" WATER SERVICE

RECOMMENDED BY THE SAN DIEGO REGIONAL STANDARDS COMMITTEE

Coordinator R.C.E. 19807 — Dec. 1975 Date

DRAWING NUMBER **W-1**

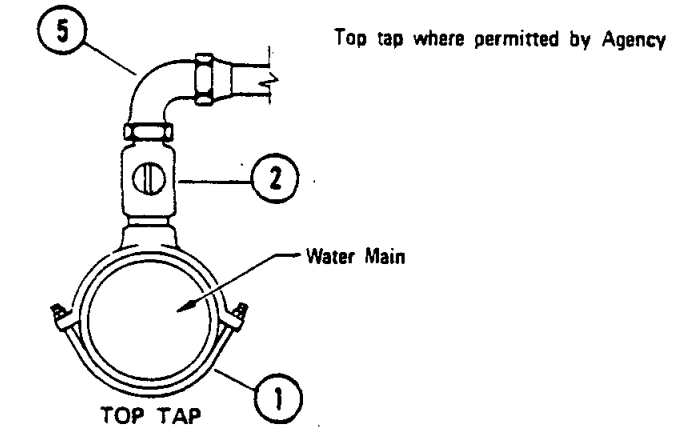

TOP TAP
(where permitted by Agency)

NOTE

Silver Soldered Joints may be used where approved by the Agency.

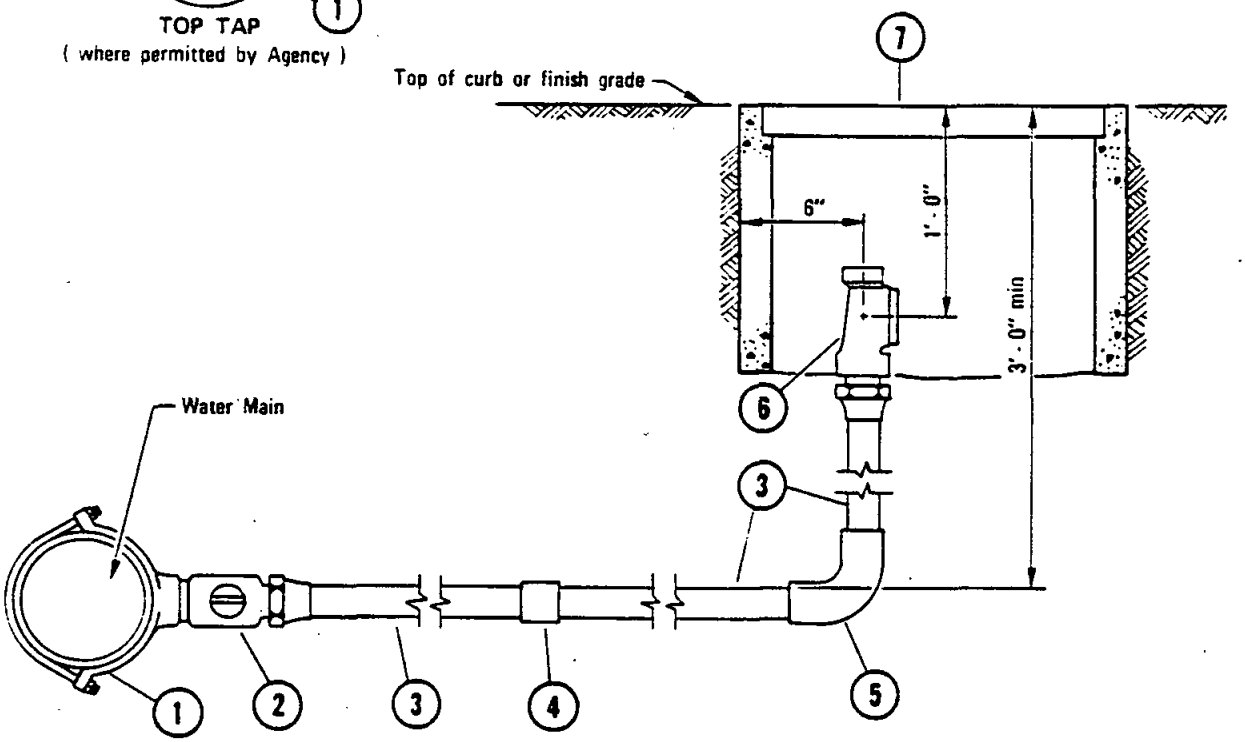

1. Bronze Service Clamp (double strap). On steel mains use clamp or weld on coupling as required by Agency. Install insulating bushing as required by Agency.
2. Bronze Corporation Stop (installed with key on side and open tap).
3. Copper Tubing or Plastic Pipe except where otherwise specified by the Agency.
4. Coupling as required by Agency when service is 20' or longer, except on Polyethylene Pipe.
5. 90° Ell
6. Bronze Angle Service Stop with Locking Device and adaptable to 1 1/2" and 2" Meter Flange.
7. Meter Box (see Standard Drawing W-15 for location).

LEGEND ON PLANS

2" (W)

RECOMMENDED BY THE SAN DIEGO REGIONAL STANDARDS COMMITTEE Coordinator R.C.E. 19807 Dec. 1975 Date	SAN DIEGO REGIONAL STANDARD DRAWING	Revision	By	Approved	Date
		Notes		D.S.	7-79
DRAWING NUMBER W-2	1½" AND 2" WATER SERVICES				

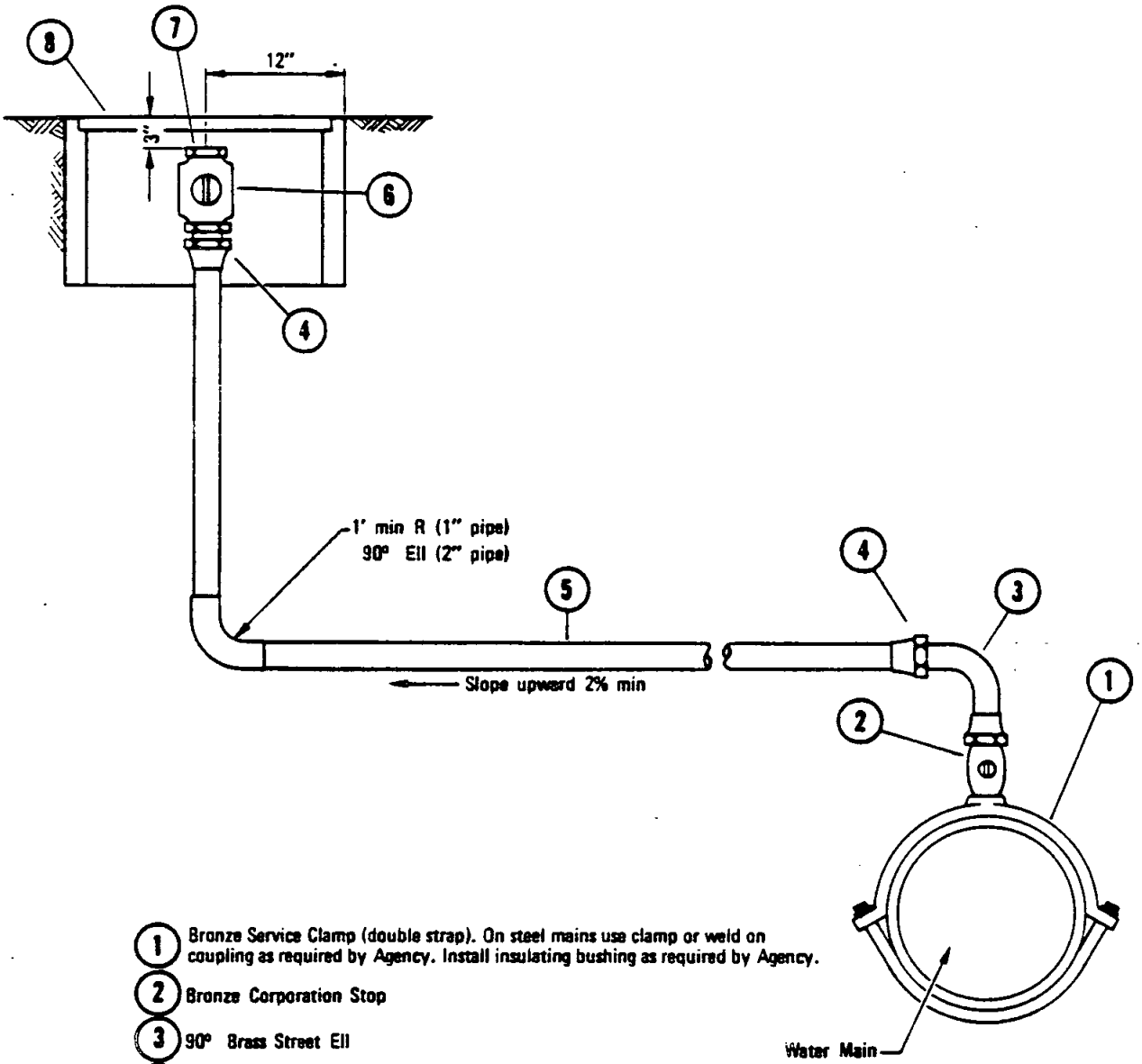

1. Bronze Service Clamp (double strap). On steel mains use clamp or weld on coupling as required by Agency. Install insulating bushing as required by Agency.
2. Bronze Corporation Stop
3. 90° Brass Street Ell
4. Pipe to Tubing Adaptor
5. Copper Tubing
6. Ball Valve
7. Brass Plug
8. Meter Box (see Standard Drawing W-15 for location).

LEGEND ON PLANS

Revision	By	Approved	Date
Notes	[illegible]	D.S.	7-79

SAN DIEGO REGIONAL STANDARD DRAWING

1" AND 2" MANUAL AIR RELEASES

RECOMMENDED BY THE SAN DIEGO REGIONAL STANDARDS COMMITTEE

[signature] Dec. 1979

Coordinator R.C.E. [illegible] Date

DRAWING NUMBER W-3

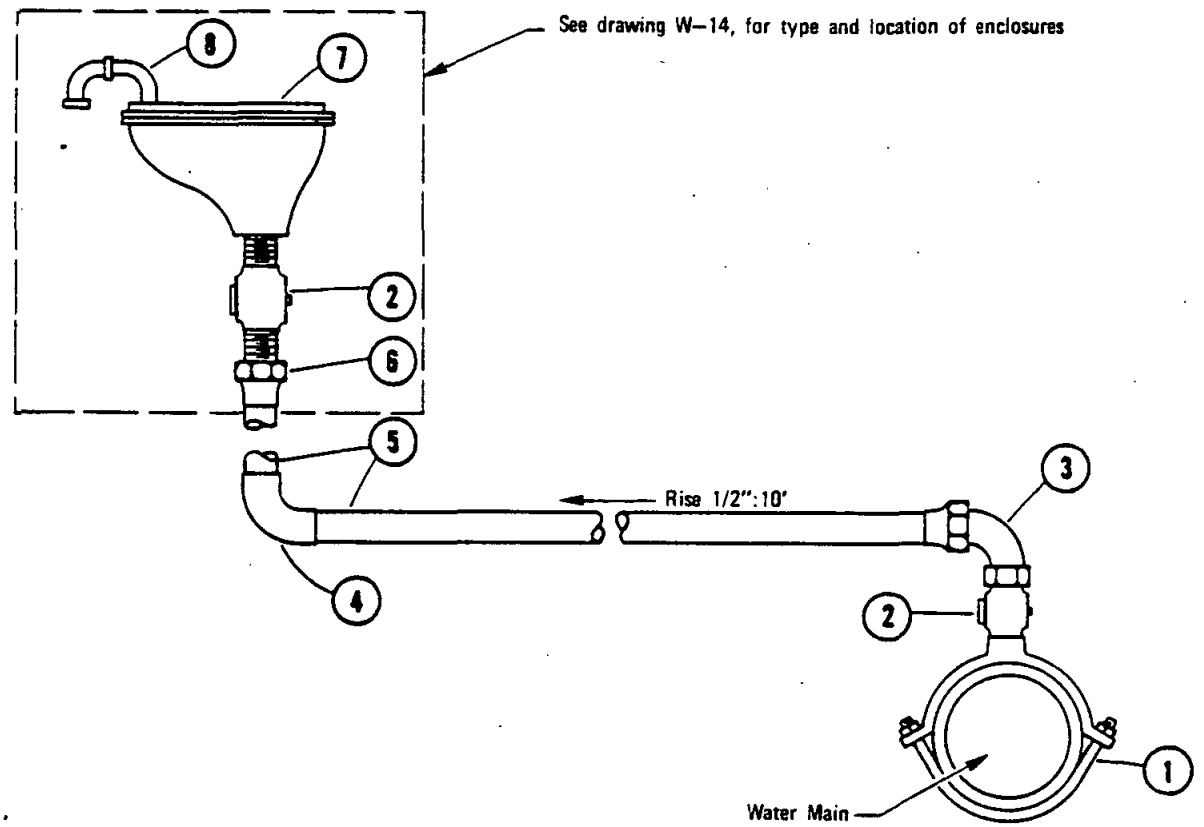

1. Double Strap Bronze Service Clamp. On steel mains use clamp or weld on coupling as required by Agency. Install insulating bushing as required by Agency.
2. Corporation Stop
3. Pipe x Tubing 90° Ell
4. 90° Sweat Ell
5. Copper Tubing
6. Female Adaptor
7. Air and Vacuum Valve
8. 2-90° Ells (not required in above metal ground enclosures).

LEGEND ON PLANS

RECOMMENDED BY THE SAN DIEGO REGIONAL STANDARDS COMMITTEE

Coordinator R.C.E. 19607 — Dec. 1975 Date

DRAWING NUMBER **W-4**

SAN DIEGO REGIONAL STANDARD DRAWING

1" AND 2" AIR AND VACUUM VALVES

Revision	By	Approved	Date
Notes	JC	O.S.	279

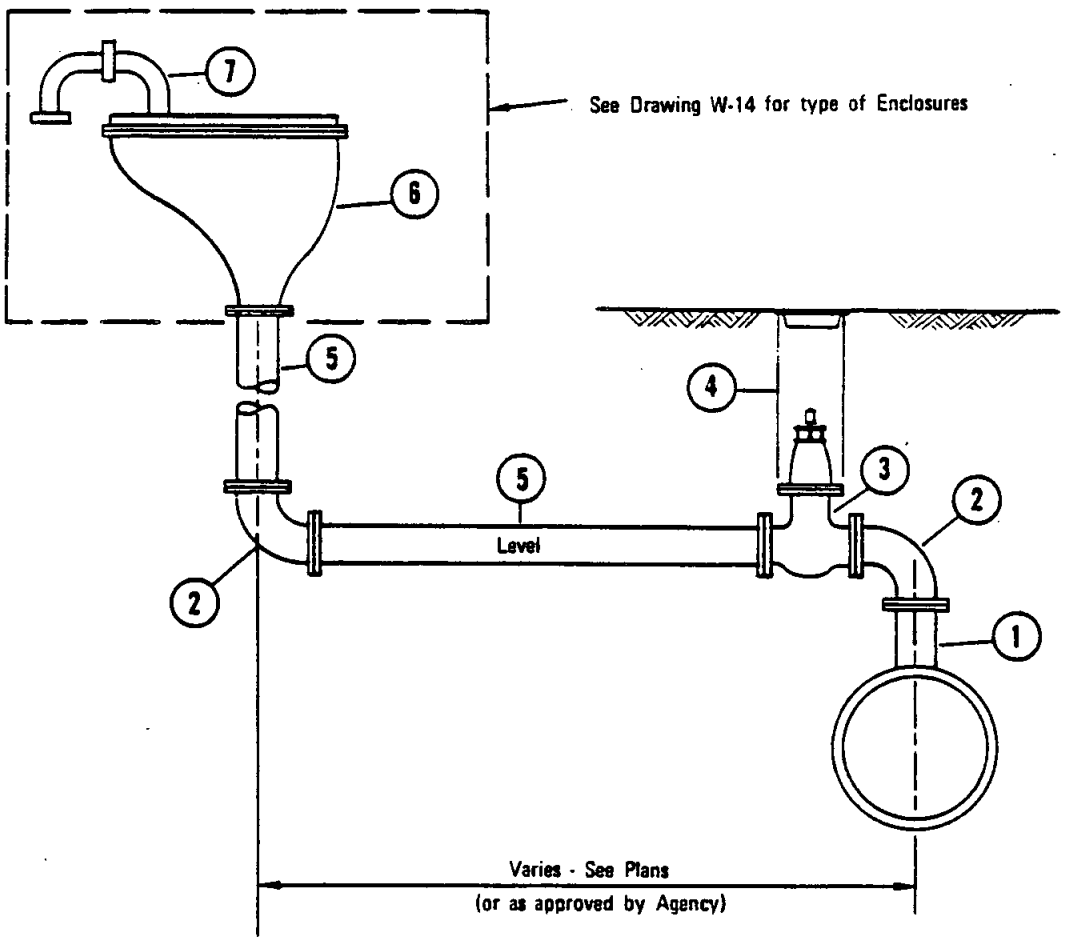

1. Flanged Outlet, Cement Lined and Coated Steel
2. Flanged, 90° Ell, Cement Lined and Coated Steel
3. Valve
4. Valve Well and Cap (see Standard Drawing W-12)
5. Steel Pipe, Cement Lined and Coated
6. Air and Vacuum Valve
7. 2 90° Ells (not required with above ground metal enclosures)

LEGEND ON PLANS

Revision	By	Approved	Date

SAN DIEGO REGIONAL STANDARD DRAWING

4" AND 6" AIR AND VACUUM VALVES

RECOMMENDED BY THE SAN DIEGO REGIONAL STANDARDS COMMITTEE

Coordinator R.C.E. 19807 — Dec. 1975 Date

DRAWING NUMBER W-5

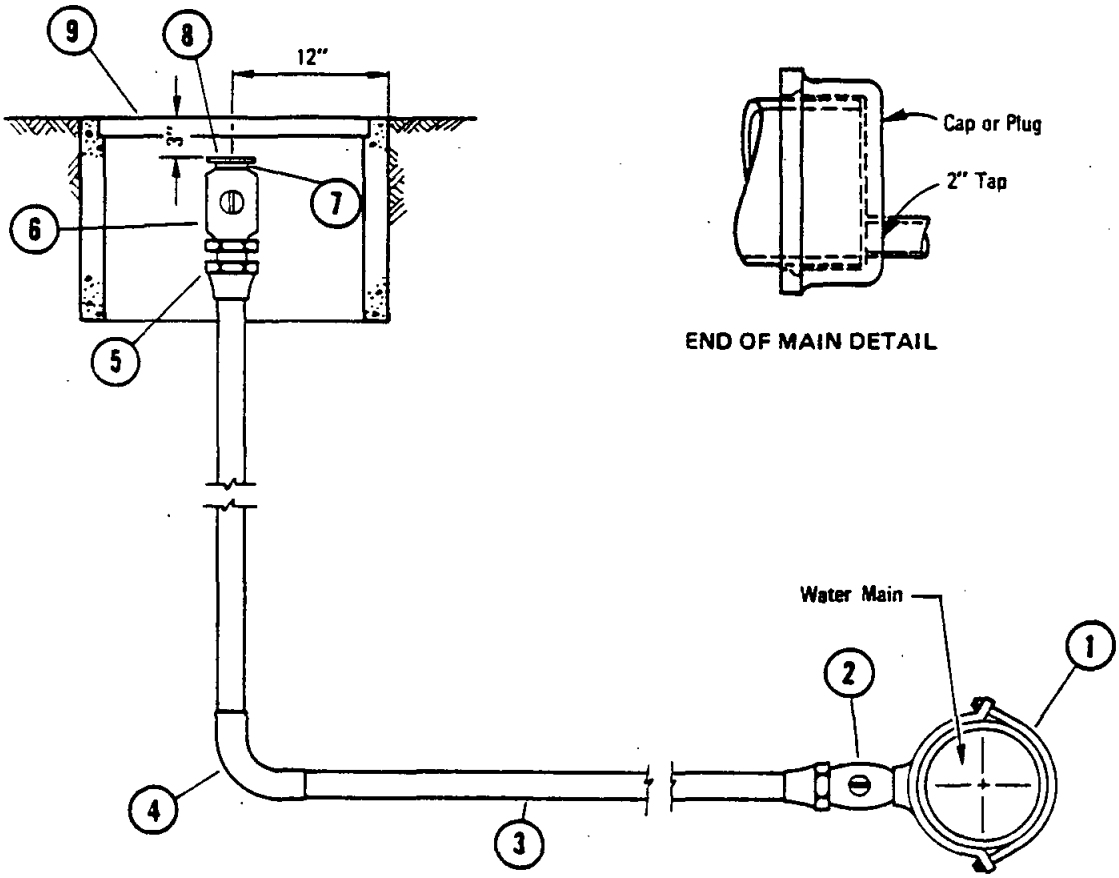

1. Bronze Service Clamp (double strap). On steel mains use clamp or weld on coupling as required by Agency. Install insulating bushing as required by Agency.
2. Bronze Corporation Stop (installed with key on side and open tap) and adaptor as required by Agency.
3. Copper Tubing
4. 90° Ell
5. Pipe to Tubing Adaptor
6. Ball Valve
7. Brass 2" Iron Pipe Thread x 2 1/2" Hose Pipe Thread Adaptor.
8. 2 1/2" Hose Cap with chain, Brass.
9. Meter Box (see Standard Drawing W-15 for location).

LEGEND ON PLANS

RECOMMENDED BY THE SAN DIEGO REGIONAL STANDARDS COMMITTEE

Coordinator R.C.E. 19807 — Dec. 1975 Date

DRAWING NUMBER W-6

SAN DIEGO REGIONAL STANDARD DRAWING

2" BLOW-OFF ASSEMBLY - TYPE A

Revision	By	Approved	Date
Detail		O.S.	7-79

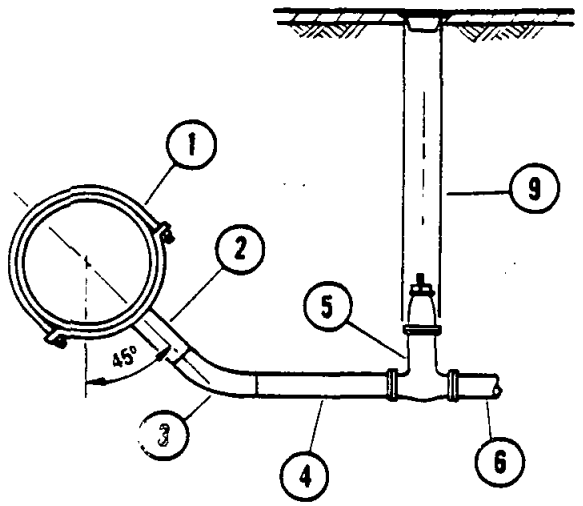

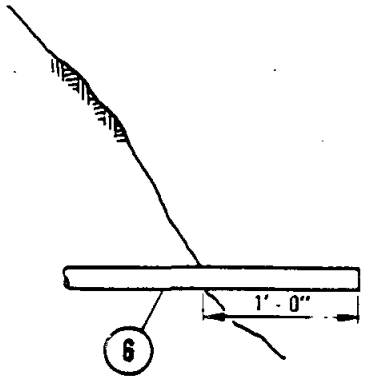

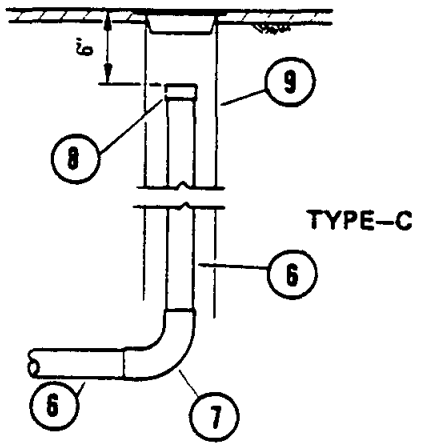

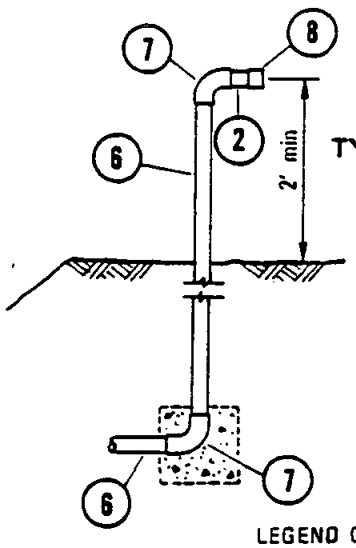

1. Bronze Service Clamp (double strap) or Pretapped Coupling. On steel mains use clamp or weld on coupling as required by Agency. Install insulating bushing as requried by Agency.
2. 2" Nipple (2"x 3")
3. 45° Ell
4. 2" Nipple (2"x 6")
5. 2" Valve
6. 2" Pipe
7. 90° Ell
8. 2" Threaded Cap
9. Valve Well Installation, See Standard Drawing W-12

NOTES

1. Type of installation and materials to be specified by Agency.
2. See Standard Drawing W-6 for end of main detail.

LEGEND ON PLANS

Revision	By	Approved	Date
Notes	SC	D.S	7-79

SAN DIEGO REGIONAL STANDARD DRAWING

2" BLOW-OFF ASSEMBLIES TYPES B, C AND D

RECOMMENDED BY THE SAN DIEGO REGIONAL STANDARDS COMMITTEE

Coordinator R.C.E. 19807 — Dec. 1975 Date

DRAWING NUMBER W-7

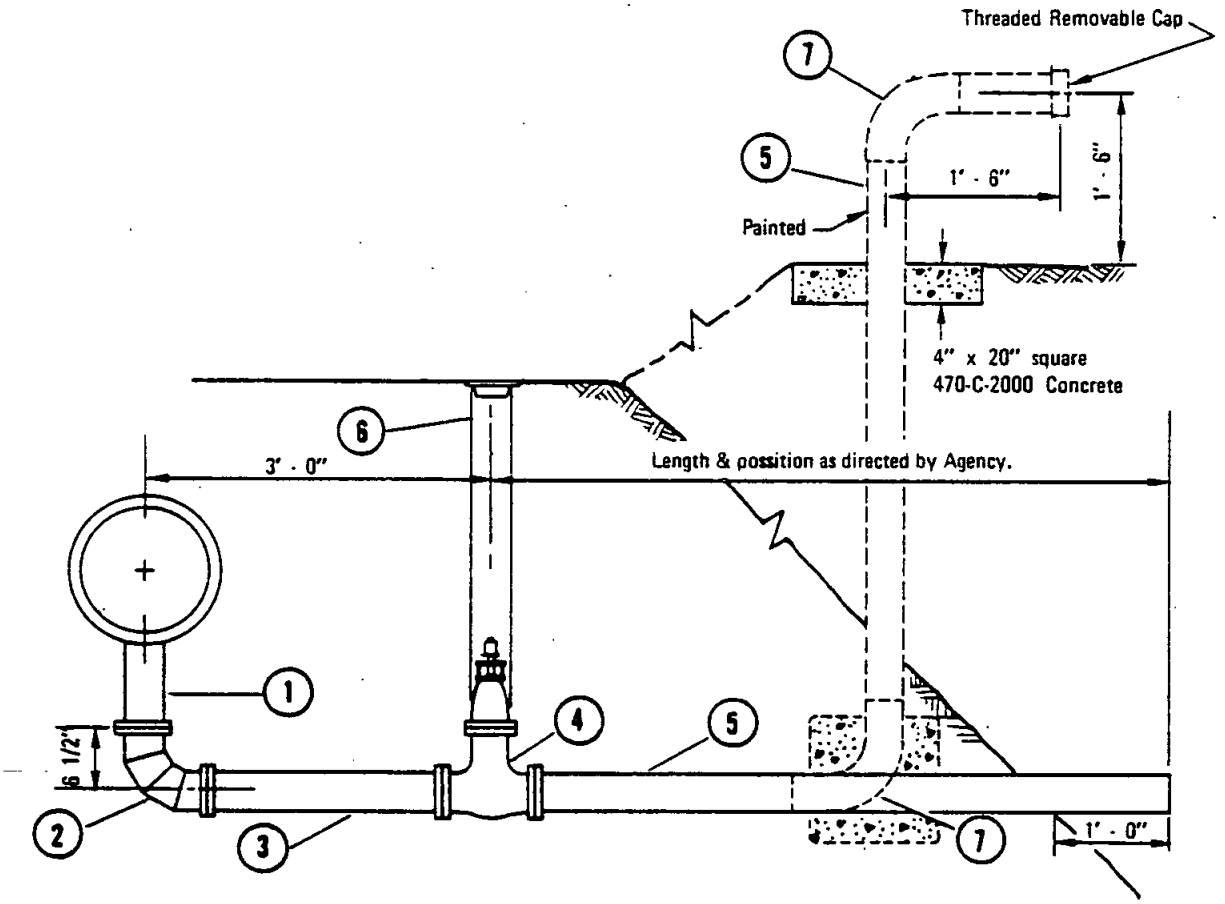

1. Flanged Tee or Welded Saddle.
2. Short Radius 90° Flanged Bend, Cement Lined and Coated.
3. Steel Pipe, Cement Lined and Coated.
4. Flanged Valve.
5. Steel Pipe (or P. V. C. Schedule 80 Pipe Where Permitted by Agency).
6. Valve Well (See Standard Drawing W-12).
7. 90° Bend (Same Material as Item 5).

LEGEND ON PLANS

RECOMMENDED BY THE SAN DIEGO REGIONAL STANDARDS COMMITTEE Coordinator R.C.E. 19807 Date Dec. 1975	SAN DIEGO REGIONAL STANDARD DRAWING	Revision	By	Approved	Date
DRAWING NUMBER W-8	4" AND 6" BLOW-OFF ASSEMBLIES TYPE A				

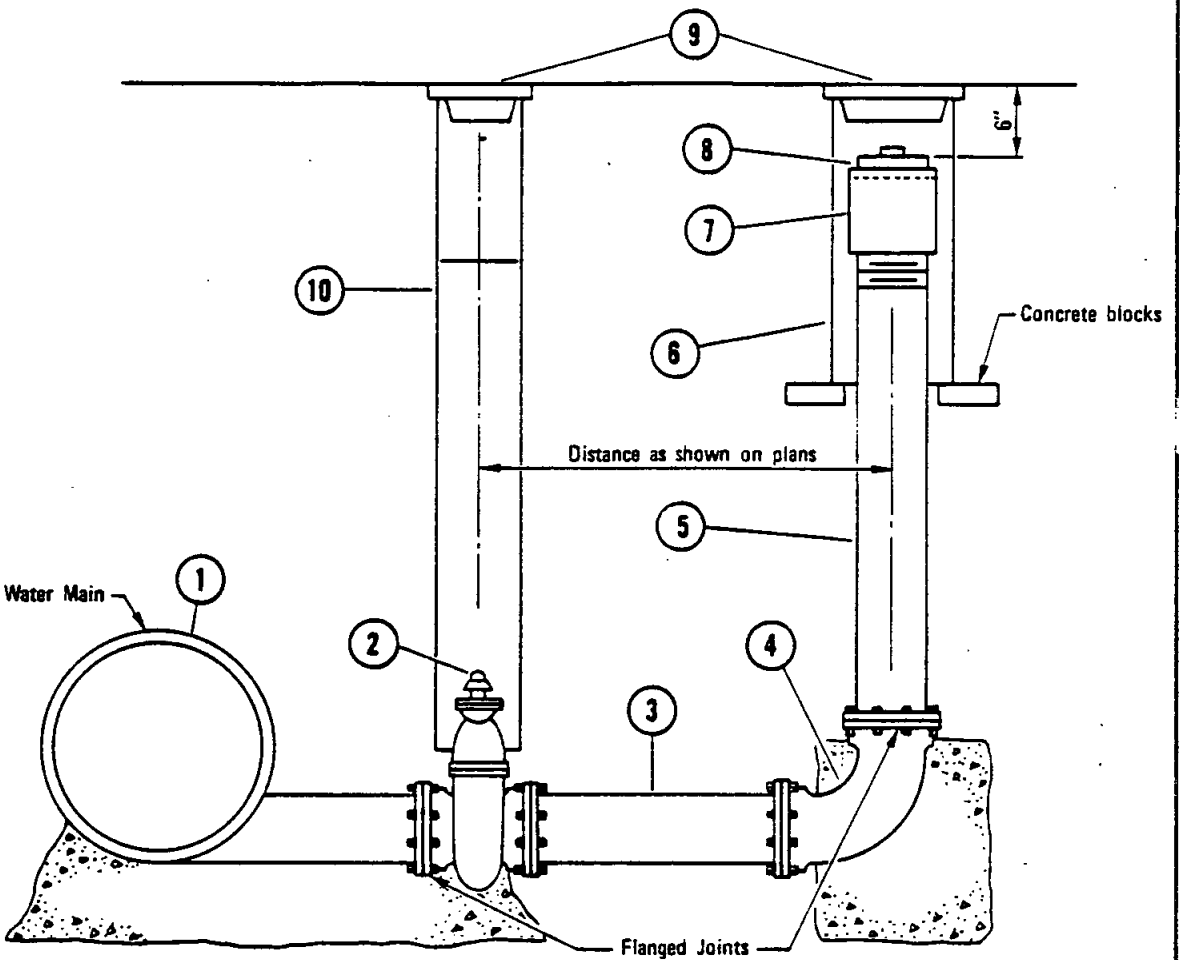

1. Main Size x Flanged Outlet, cement lined and coated.
2. Flanged Gate Valve (F x RT for A.C. Pipe).
3. Cast Iron Pipe or A.C. Pipe (6 1/2' min for A.C. Pipe).
4. F x F 90° Bend (F x RT for A.C. Pipe).
5. Galvanized Iron Pipe, threaded and flanged.
6. 10" Class 200 A.C. Pipe Gate Well.
7. Galvanized Iron Coupling, threaded.
8. Galvanized Iron Plug.
9. Gate Well Cap with 4" skirt.
10. Valve Well (see Standard Drawing W–12).

LEGEND ON PLANS

Revision	By	Approved	Date

SAN DIEGO REGIONAL STANDARD DRAWING

4" AND 6" BLOW-OFF ASSEMBLIES TYPE B

RECOMMENDED BY THE SAN DIEGO REGIONAL STANDARDS COMMITTEE

Coordinator R.C.E. 19807 — Dec. 1975 Date

DRAWING NUMBER W-9

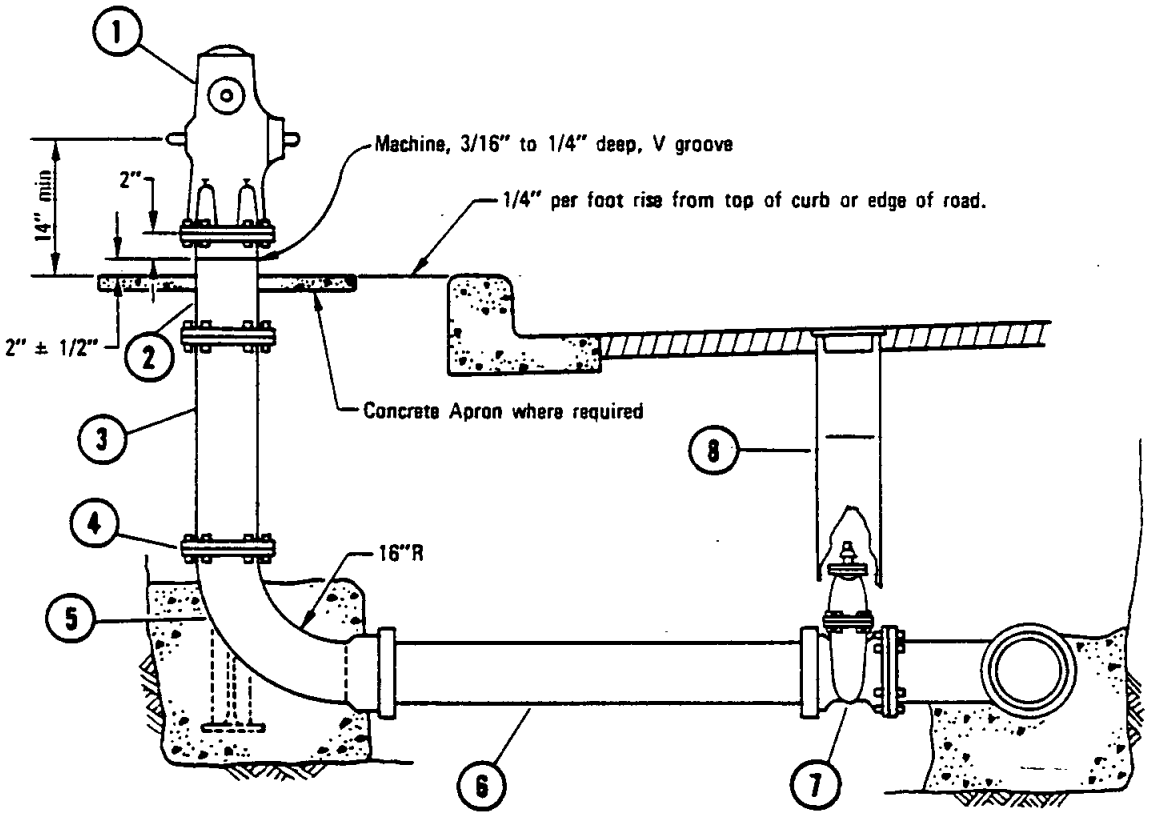

NOTE

Items 2, 3 & 6 may be cement lined and coated flanged steel pipe where permitted by Agency.

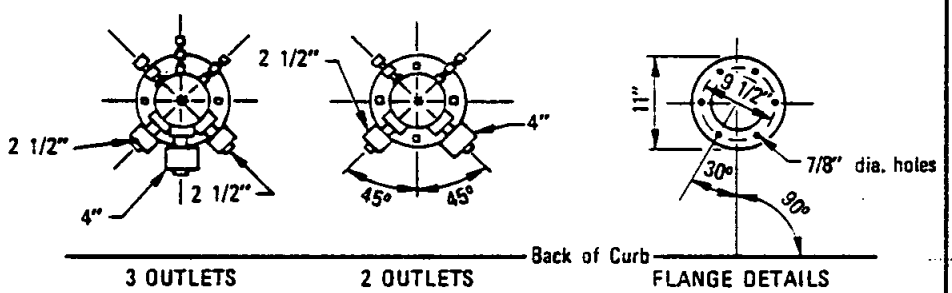

1. Fire Hydrant
2. 12" long Extension Spool
3. Extension Spool
4. 3/4"x 3" Hex. Head Machine Bolts and Nuts, Typical.
5. Hydrant Ell
6. Asbestos Cement Pipe
7. Valve
8. Valve Well Installation (see Standard Drawing W-12)

LEGEND ON PLANS

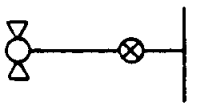

RECOMMENDED BY THE SAN DIEGO REGIONAL STANDARDS COMMITTEE

Coordinator R.C.E. 19867 Date Dec. 1975

DRAWING NUMBER W-10

SAN DIEGO REGIONAL STANDARD DRAWING

6" FIRE HYDRANT

Revision	By	Approved	Date

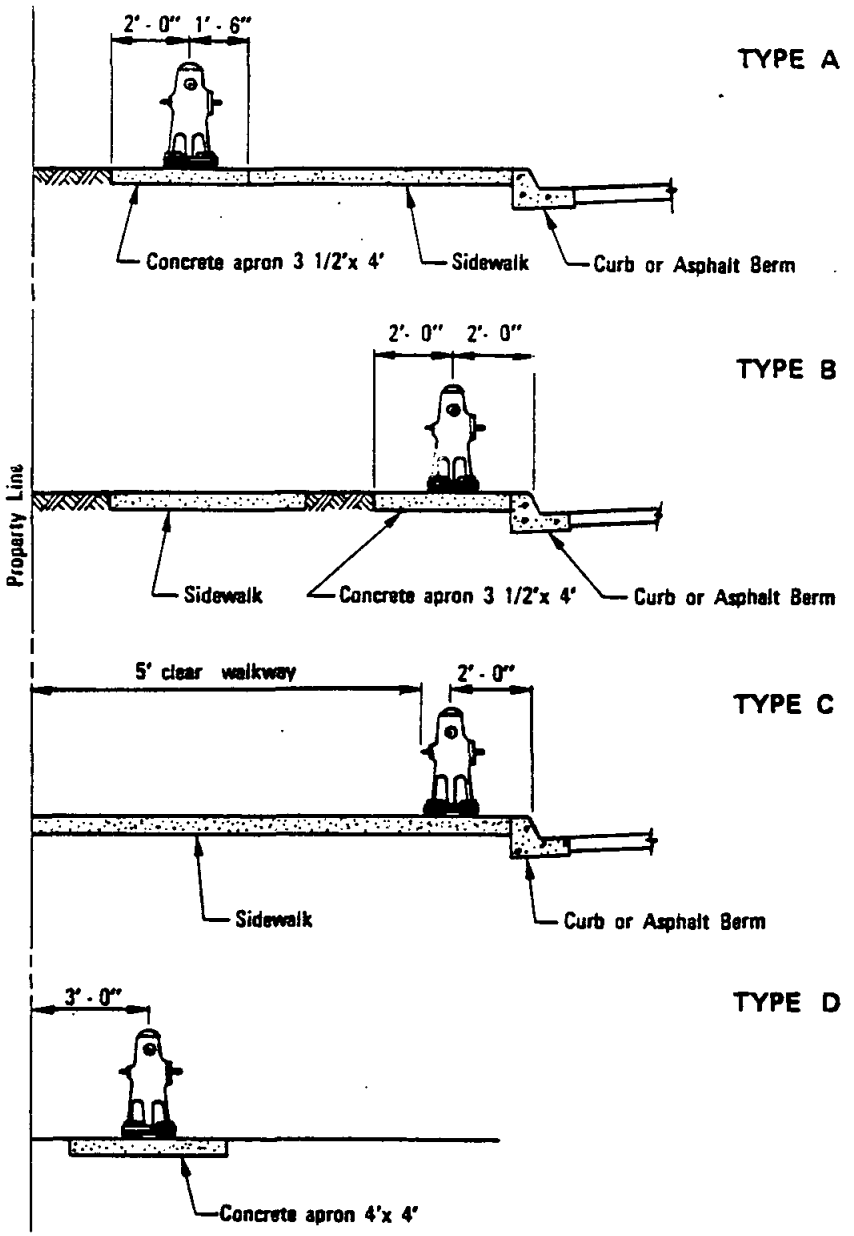

NOTES:

1. Apron, where required by Agency, shall be 4" thick (520-C-2500) concrete.
2. When distance from hydrant to the top or toe of slope is less than 2'–0", special hydrant installation will be required by Agency.
3. Where hydrant is not protected by a vertical face of curb protective posts are required. See Standard Drawing W-16 for details.
4. Hydrant shall be located 5' minimum from curb return and 3' minimum from driveway or any fixed obstruction.

Revision	By	Approved	Date
Notes	TRP	M.S.	10-82

SAN DIEGO REGIONAL STANDARD DRAWING

FIRE HYDRANT LOCATIONS

RECOMMENDED BY THE SAN DIEGO REGIONAL STANDARDS COMMITTEE

Coordinator R.C.E. 19807 — Dec. 1975 Date

DRAWING NUMBER W-11.1

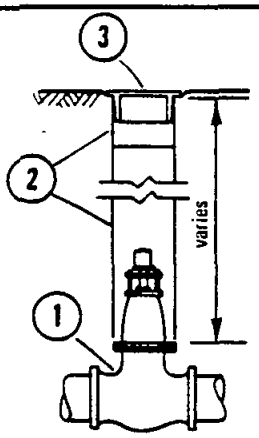

TYPE–A

1. Valve
2. 8" Asbestos Cement Pipe, Class 150
3. 8" Valve Well Cap with 4" Skirt

NOTES

1. Provide clamp or felt to hold pipe sections (item 2) together during backfill.
2. Pipe shall be saw or machine cut on each end, no beveled sections will be permitted.
3. The final adjustment to finish grade may be made with an asbestos cement ring of 1" minimum height.

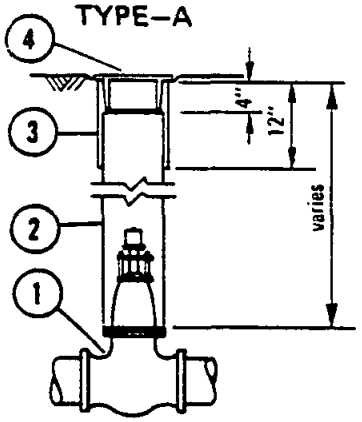

TYPE–B

1. Valve
2. 8" O.D. Steel Pipe, or 10 Ga. Asphalt Coated and Lined.
3. 8 5/8" O.D. Steel Pipe or 10 Ga. Asphalt Coated and Lined.
4. 8" Valve Well Cap with 4" Skirt

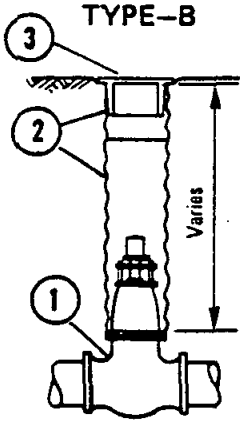

TYPE–C

1. Valve
2. 8" Corrugated Steel Pipe, 16 Gage
3. 8" Valve Well Cap with 4" Skirt

NOTE

Pipe sections shall be tack welded together.

GENERAL NOTES

1. Clearance around cover shall permit lifting by hand without damage to pipe. Maximum clearance shall be 3/16".
2. See Standard Drawing W-13 for valve stem extension, when required by Agency.

RECOMMENDED BY THE SAN DIEGO REGIONAL STANDARDS COMMITTEE

Coordinator R.C.E. 19807 Date Dec. 1975

DRAWING NUMBER W-12

SAN DIEGO REGIONAL STANDARD DRAWING

VALVE WELL INSTALLATION

Revision	By	Approved	Date

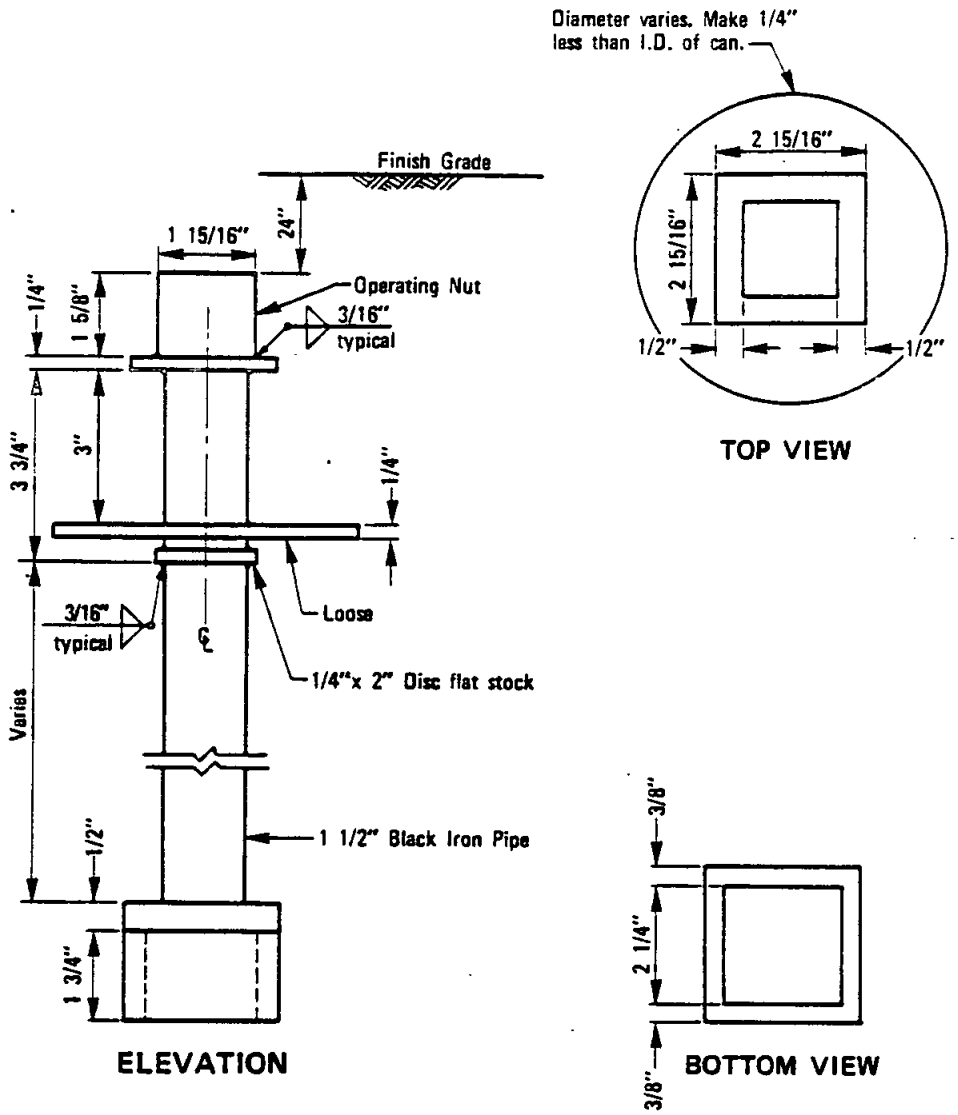

NOTES

1. Extension to be used when top of valve nut is 5' or more below finish grade.
2. Paint all finished surfaces with asphalt varnish.

Revision	By	Approved	Date

SAN DIEGO REGIONAL STANDARD DRAWING

VALVE STEM EXTENSION

RECOMMENDED BY THE SAN DIEGO REGIONAL STANDARDS COMMITTEE

Coordinator R.C.E. 19807 — Dec. 1975 Date

DRAWING NUMBER **W-13**

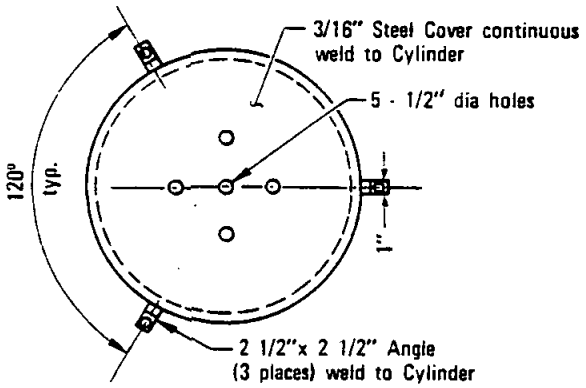

PLAN

Valve Size	Dia	H
1" & 2"	14"	24"
4"	14"	30"
6"	16"	36"

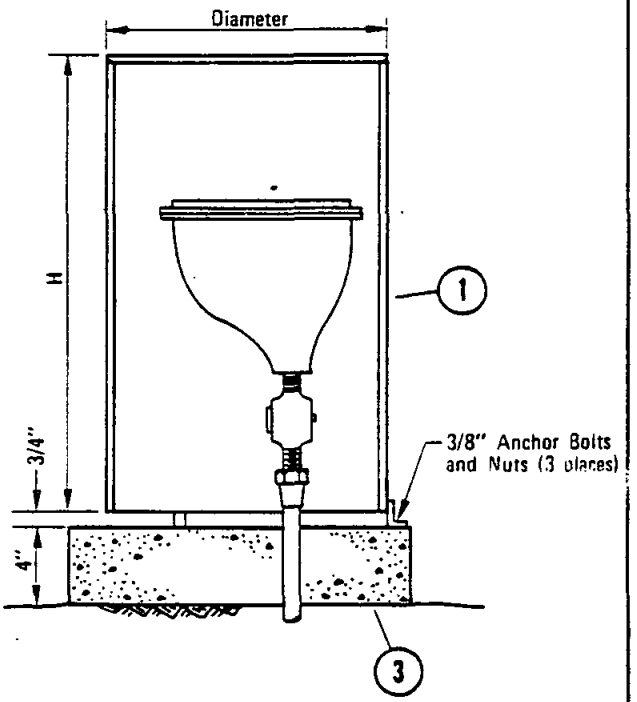

TYPE A

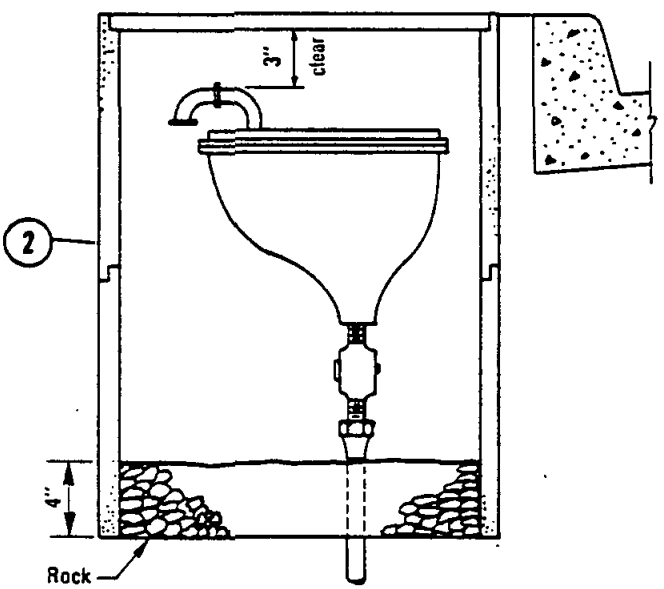

TYPE B

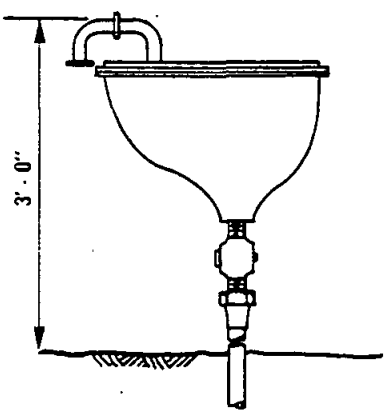

TYPE C

1. Steel enclosure, paint as specified by Agency.
2. Meter box, see Standard Drawing W-15 for location.
3. 2' x 2' pad, 470 - C - 2000 Concrete

RECOMMENDED BY THE SAN DIEGO REGIONAL STANDARDS COMMITTEE

Allen A Kershaw Dec. 1975
Coordinator R.C.E. 19807 Date

DRAWING NUMBER W-14

SAN DIEGO REGIONAL STANDARD DRAWING

AIR AND VACUUM VALVE ENCLOSURES

Revision	By	Approved	Date

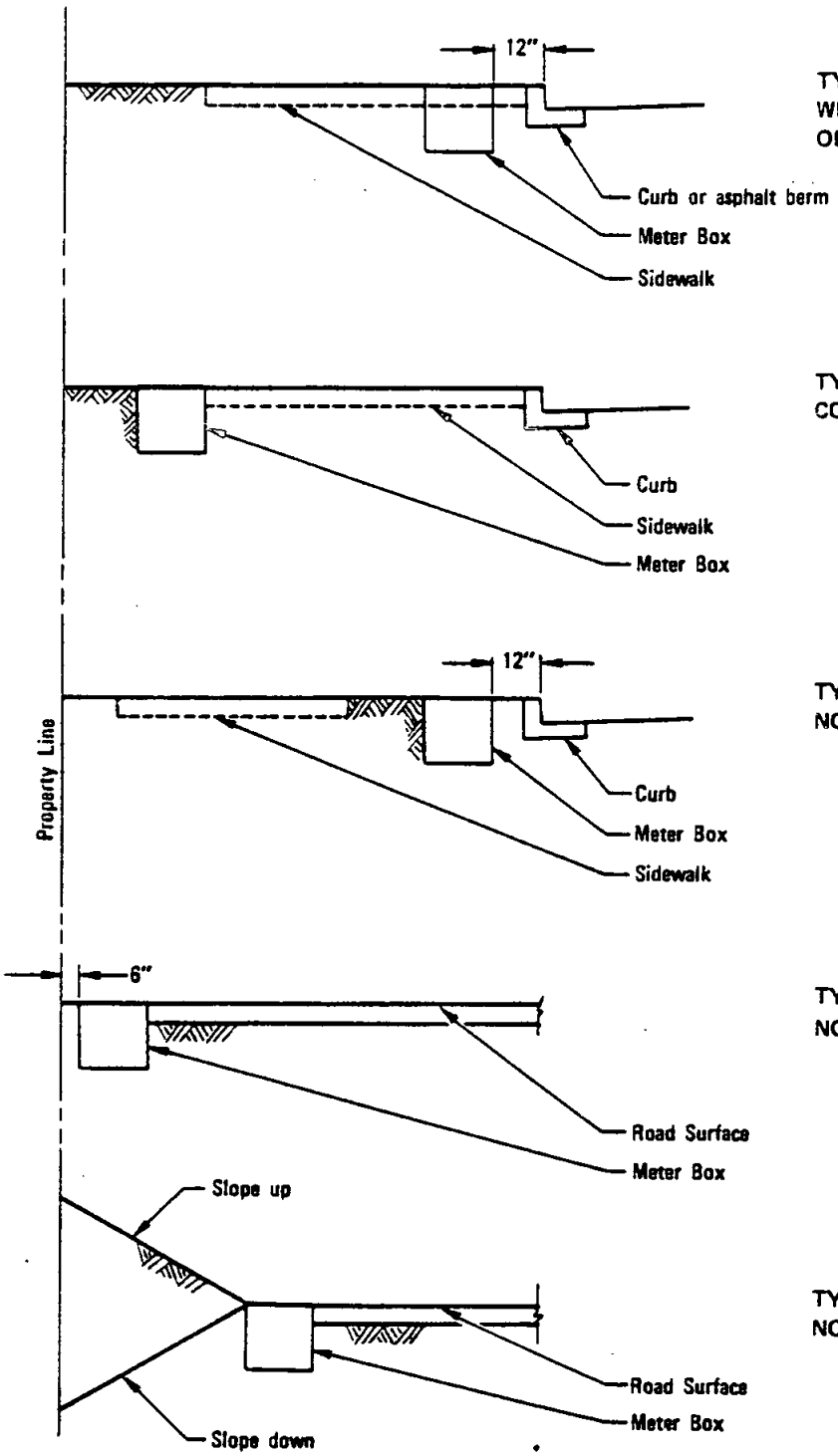

TYPE *A1
WITH OR WITHOUT COMMERCIAL
OR RESIDENTIAL SIDEWALK

TYPE *A2
CONTIGUOUS SIDEWALK

TYPE B
NON-CONTIGUOUS SIDEWALK

TYPE C
NO CURB

TYPE D
NO CURB

* Agency to determine alternate

Revision	By	Approved	Date

SAN DIEGO REGIONAL STANDARD DRAWING

METER BOX LOCATIONS

RECOMMENDED BY THE SAN DIEGO REGIONAL STANDARDS COMMITTEE

Coordinator R.C.E. 19807 Dec. 1975 Date

DRAWING NUMBER W-15

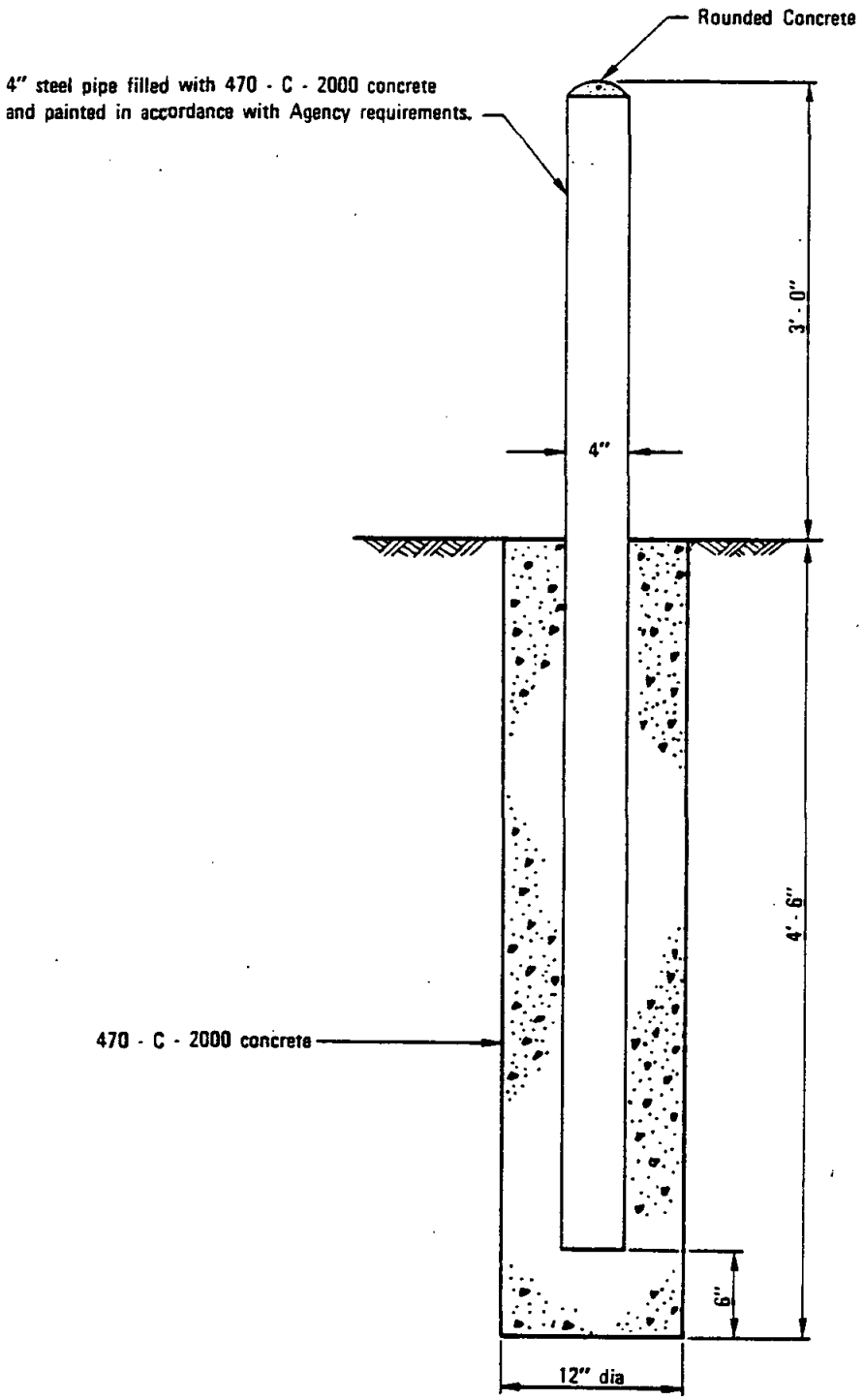

RECOMMENDED BY THE SAN DIEGO REGIONAL STANDARDS COMMITTEE Coordinator R.C.E. 15807 Date Dec. 1975	SAN DIEGO REGIONAL STANDARD DRAWING	Revision	By	Approved	Date
DRAWING NUMBER W-16	PROTECTION POST				

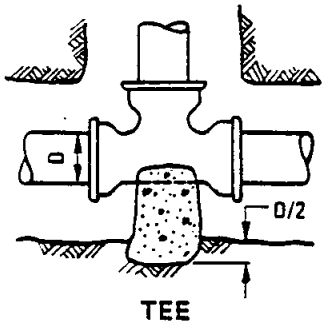

TEE

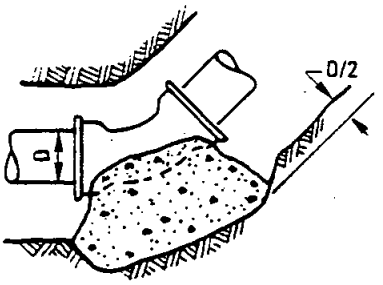

HORIZONTAL OR
VERTICAL BEND

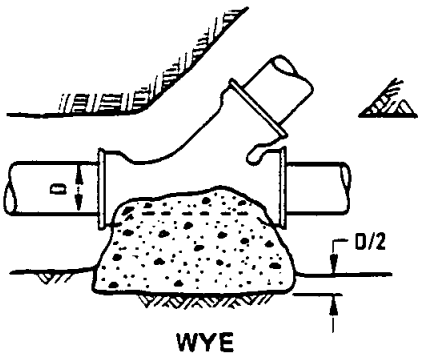

WYE

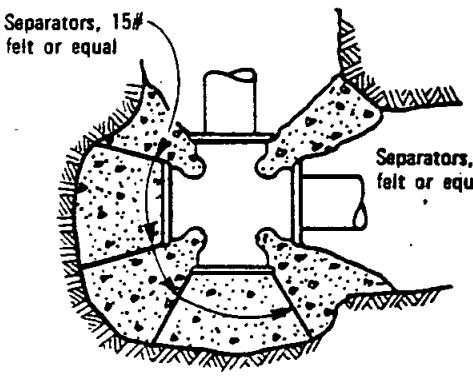

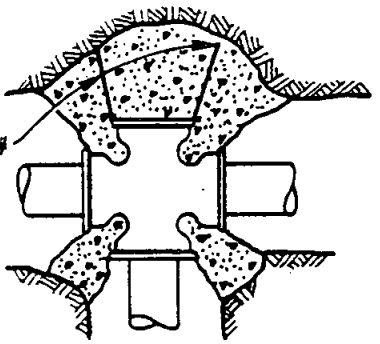

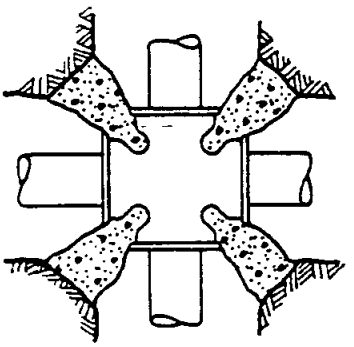

CROSS BLOCKING

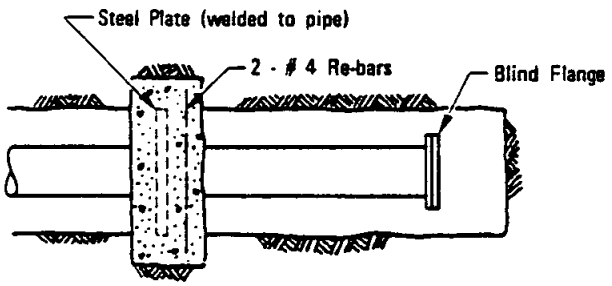

STEEL PIPE
PLAN

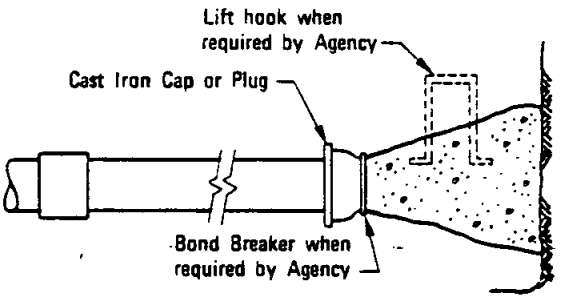

A.C. PIPE
ELEVATION

DEAD END BLOCKING

NOTES

1. Concrete shall be 470 - C - 2000.
2. See Standard Drawing W-18 for bearing areas.

Revision	By	Approved	Date

SAN DIEGO REGIONAL STANDARD DRAWING

CONCRETE THRUST BLOCKS

RECOMMENDED BY THE SAN DIEGO REGIONAL STANDARDS COMMITTEE

Coordinator R.C.E. 19807 — Dec. 1975 Date

DRAWING NUMBER **W-17**

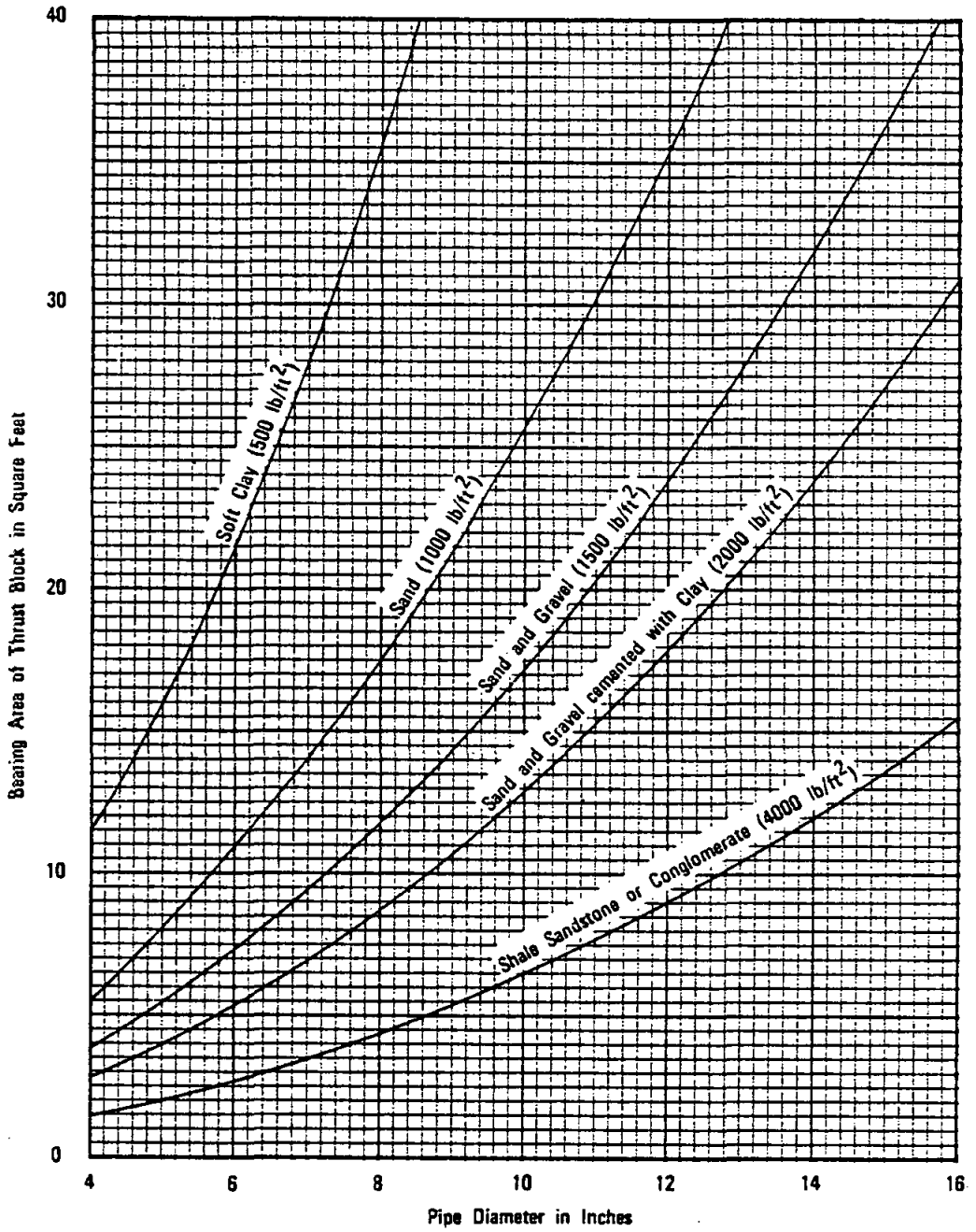

NOTES

1. Based on 225 psi test pressure and bearing values of dry soils.
2. Values from curves are for tees and deadends, i.e.; straight line thrust.
   For 90° bend: 1.4 value from curve.
   For 45° bend: 0.8 value from curve.
   For 22 1/2° bend: 0.4 value from curve.
3. For conditions not covered by curves, special thrust blocks must be computed and approved.

RECOMMENDED BY THE SAN DIEGO REGIONAL STANDARDS COMMITTEE Oct. 1975 Coordinator R.C.E. 19867 Date	SAN DIEGO REGIONAL STANDARD DRAWING	Revision	By	Approved	Date
DRAWING NUMBER W-18	THRUST BLOCK BEARING AREAS				

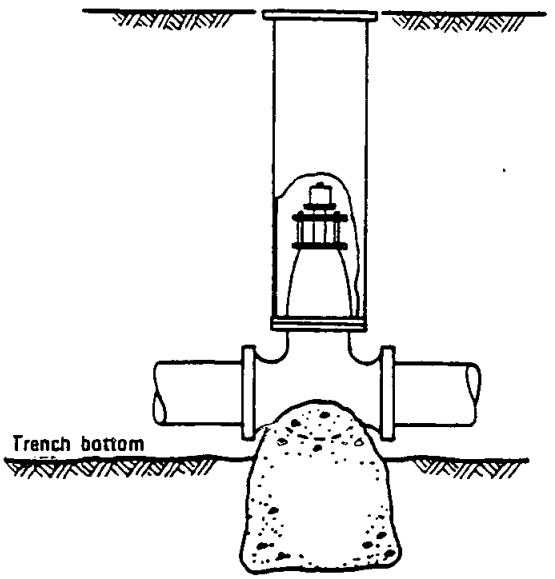

TYPE–A SUPPORT BLOCK

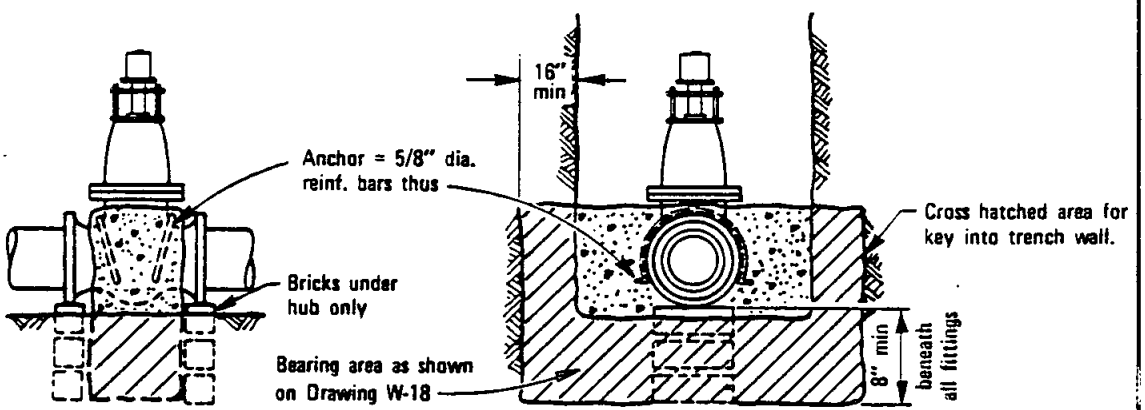

TYPE–B THRUST BLOCK

NOTE

Concrete shall be 470-C-2000.

Revision	By	Approved	Date

SAN DIEGO REGIONAL STANDARD DRAWING

CONCRETE VALVE BLOCKING

RECOMMENDED BY THE SAN DIEGO REGIONAL STANDARDS COMMITTEE

Coordinator R.C.E. 19807 — Dec. 1975 Date

DRAWING NUMBER **W-19**

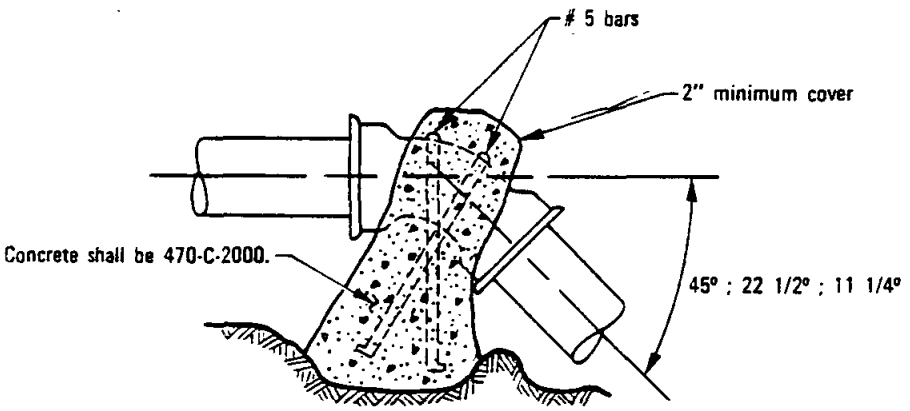

Pipe Nominal Dia	Cubic Ft. Of Concrete Required per 100 P.S.I. Pressure*		
	45°	22 1/2°	11 1/4°
4	7	4	2
6	15	8	4
8	27	14	7
10	**	21	11
12	**	**	16

* Increase volumes shown in proportion to pressures existing when pressure testing pipeline.

** Special design required.

RECOMMENDED BY THE SAN DIEGO REGIONAL STANDARDS COMMITTEE

Coordinator R.C.E. 19807 Dec. 1975 Date

DRAWING NUMBER W-20

SAN DIEGO REGIONAL STANDARD DRAWING

ANCHOR BLOCK (VERTICAL BEND ONLY)

Revision	By	Approved	Date

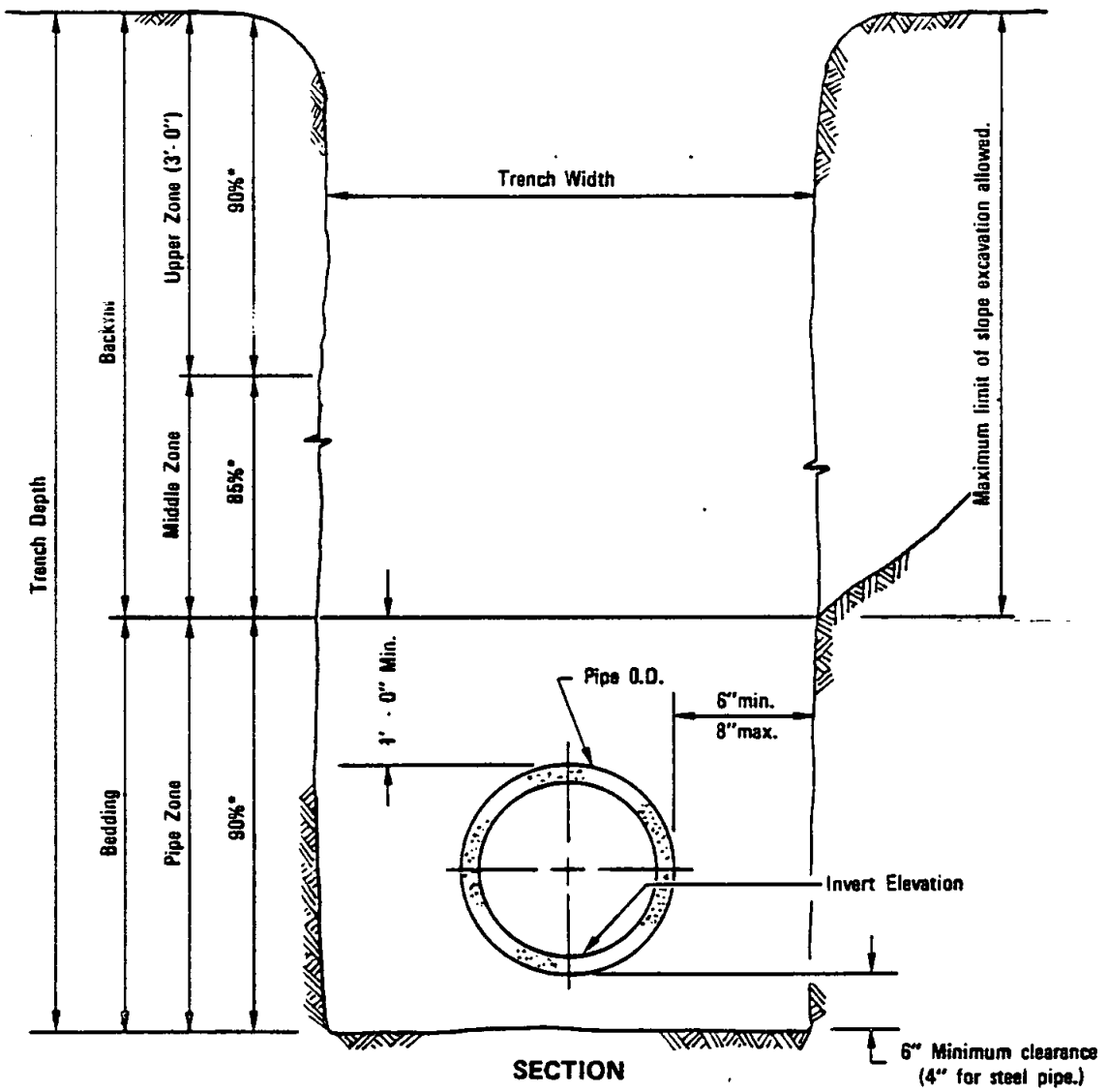

SECTION

NOTES

1. For trenching on improved streets see standard drawing G-24.1 or G-25.1 for resurfacing details.
2. (*) indicates minimum relative compaction.

Revision	By	Approved	Date
Section		O.S	7-77
Reference		M.B.	10-82

SAN DIEGO REGIONAL STANDARD DRAWING

PIPE BEDDING AND TRENCH BACKFILL FOR WATER MAINS

RECOMMENDED BY THE SAN DIEGO REGIONAL STANDARDS COMMITTEE

Coordinator R.C.E. 19807 — Dec. 1975 Date

DRAWING NUMBER W-21.1

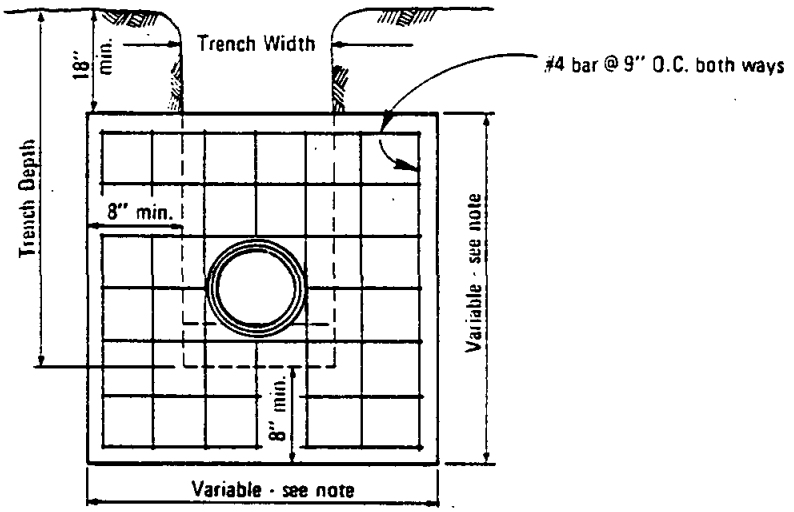

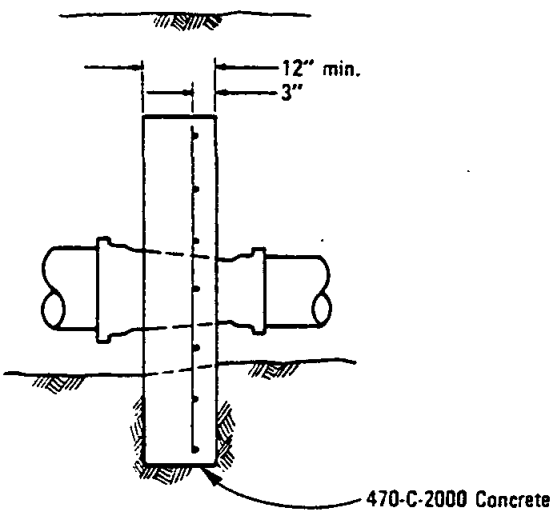

NOTE:
Bearing area shall be the difference between the bearing areas required for thrust anchorage of mains on each side of reducer as found from Std. Dwg. W-18 plus the area of the trench opening, except that minimum dimensions shown shall be adhered to.

RECOMMENDED BY THE SAN DIEGO REGIONAL STANDARDS COMMITTEE Coordinator R.C.E. 25291 Date	SAN DIEGO REGIONAL STANDARD DRAWING	Revision	By	Approved	Date
DRAWING NUMBER W-22	THRUST ANCHOR FOR WATER MAIN REDUCER - 4 THRU 16 INCH				

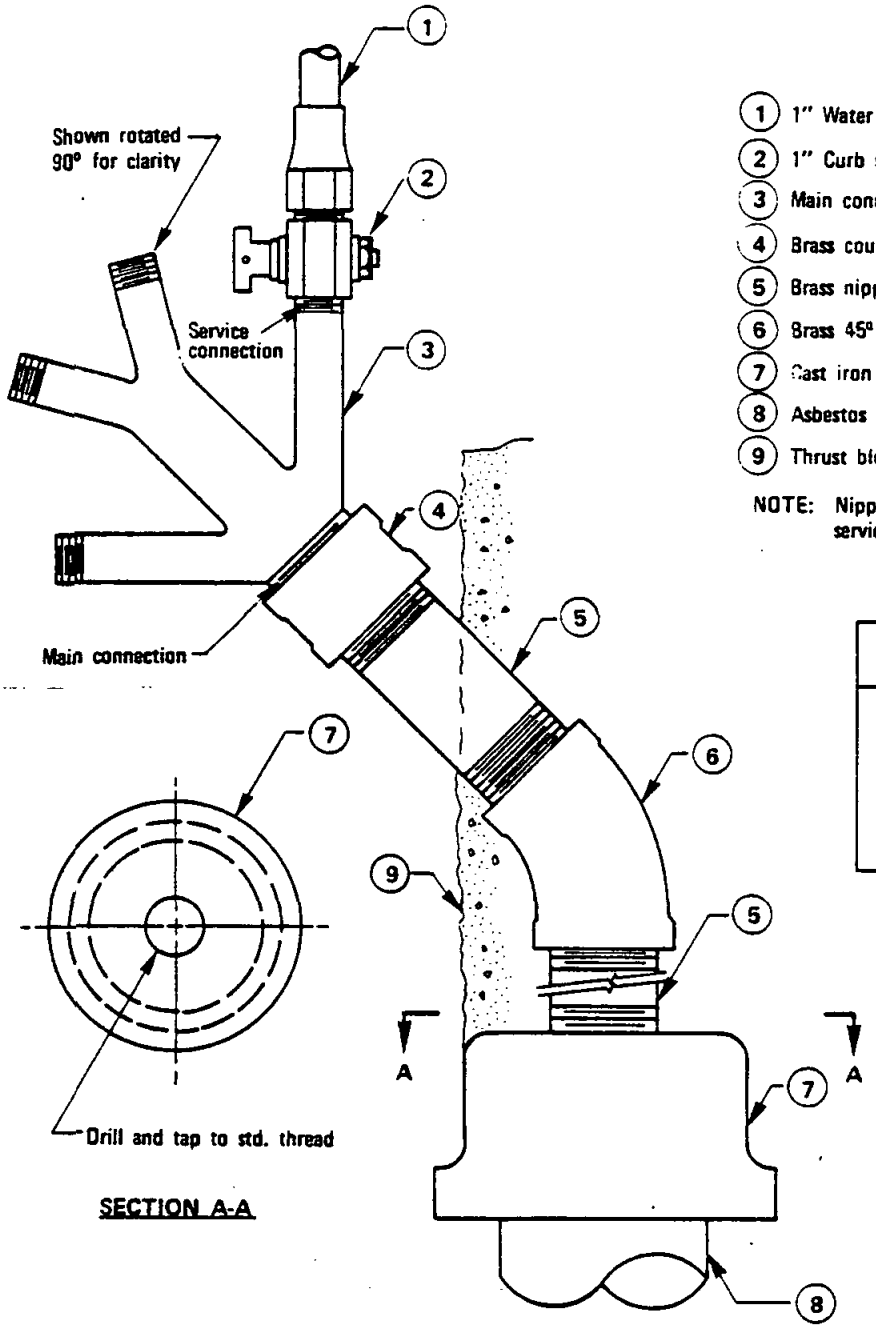

SECTION A-A

ELEVATION

1. 1" Water service per Dwg W-1
2. 1" Curb stop
3. Main connection X multiple branch connection
4. Brass coupling or 45° elbow
5. Brass nipple - 4" min. length
6. Brass 45° elbow
7. Cast iron cap
8. Asbestos cement pipe
9. Thrust block per Dwg W-17

NOTE: Nipple lengths to be sufficient to allow service connection to clear thrust block.

Service Connection	Main Connection Item 5
2	1¼"
3	1½"
4	2"
6	2½"
8	3"

Revision		Approved	Date

SAN DIEGO REGIONAL STANDARD DRAWING

MULTIPLE SERVICE ASSEMBLY DEAD END MAIN

RECOMMENDED BY THE SAN DIEGO REGIONAL STANDARDS COMMITTEE

Coordinator R.C.E. 25291 Date

DRAWING NUMBER W-23

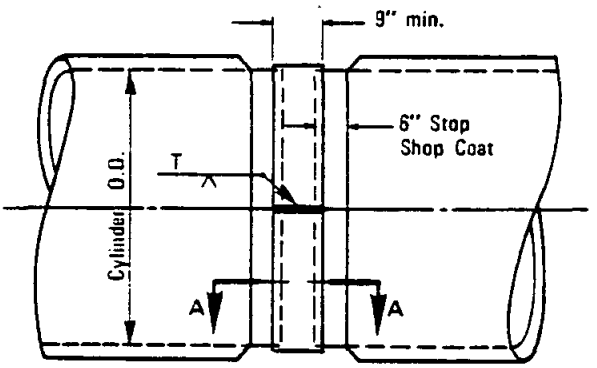

ELEVATION

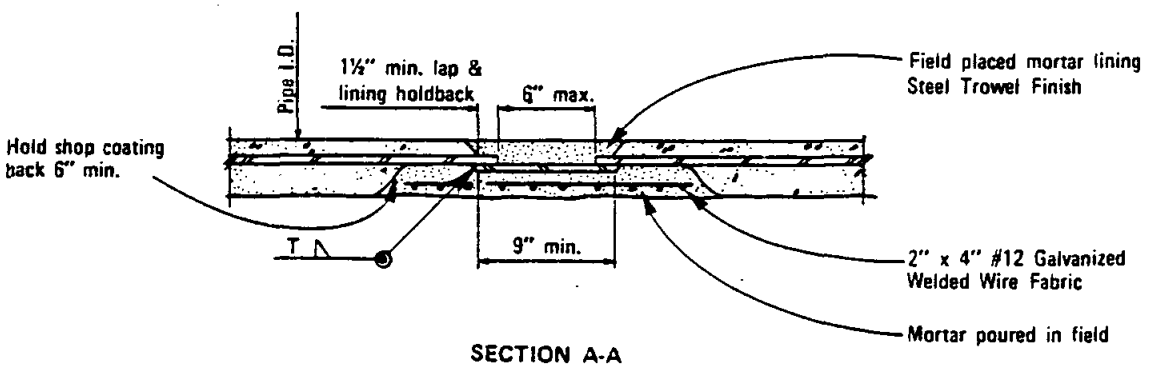

SECTION A-A

NOTE:

Contractor shall provide handholes as required to complete the work

RECOMMENDED BY THE SAN DIEGO REGIONAL STANDARDS COMMITTEE Coordinator R.C.E. 25291 Date	SAN DIEGO REGIONAL STANDARD DRAWING	Revision	By	Approved	Date
DRAWING NUMBER W-24	SPLIT BUTT STRAP				

INDEX

-A-

Drawing No.

AIR AND VACUUM VALVE
- 1" and 2" W-4
- 4" and 6" W-5

AIR RELEASE VALVE
- Manual. W-3

ALLEY
- Apron, Concrete G-17
- Concrete, Pavement. G-21

ANCHOR, PIPE
- Concrete. S-9.1
- Thrust. W-22
- Valve W-19
- Vertical Bend W-20

-B-

BACKFILL, PIPE TRENCH
- Irrigation. 1-25.1,1-26.1
- Sewer S-4.1, S-5.1, S-18
- Storm Drain D-60.1
- Water Main. W-21.1

BARRICADE, STREET M-9.1

BENCH MARK, BRASS PLUG. M-11

BERM, ASPHALT CONCRETE. G-5

BLOCK, CONCRETE
- Anchor. W-20, W-22
- Thrust. W-17, W-22
- Valve W-19

BLOW-OFF, WATER
- 2". W-6, W-7
- 4" and 6" W-8, W-9

BROW DITCH. D-75.1

BUTT STRAP, SPLIT W-24

-C-

Drawing No.

CATCH BASIN
- Corrugated Steel Pipe, Type A, B D-16
- Grate Top, Type G, I. D-8.1, D-29.1
- Side Opening, Type F. D-7.1

CHANNEL, DRAINAGE
- Cutoff Wall D-72
- Debris Fence. D-82
- Earthen D-74
- Lined, Concrete D-70, D-71
- Pipe Connection D-73

CLEANOUT
- Sewer, Force Main S-16
- Sewer, Gravity. S-3
- Storm Drain, Type A, B. . . . D-9, D-10
- Storm Drain, Notes and Details D-11

CONCRETE
- Backfill, Sewer S-8
- Collar, Pipe. D-62
- Cradle, Sewer S-6
- Cutting G-11
- Encasement, Sewer S-7.1, S-12
- Lug, Pipe D-63
- Mowing Strip. L-3
- Removal and Replacement . . . G-11

CORRUGATED STEEL PIPE
- Inlets, Type A, B D-16, D-17
- Slotted Drain D-18.1, D-19

CULVERT, BOX
- Double. D-77
- Debris Fence. D-82
- Miscellaneous Details D-81.1
- Single. D-76
- Triple. D-78
- Wingwalls, Type A, B & C. . . D-79
- Wingwalls, Warped D-80.1

CURB AND GUTTER
- Combined. G-2
- Median. G-6
- Monolithic With Sidewalk. . . G-3.1
- Removal and Replacement . . . G-11
- Rolled. G-4.1

INDEX

Drawing No.

Separate. G-1

CURB INLET
- Apron, Concrete D-20
- Grate D-14.1,D-15.1
- Notes and Details D-11
- Opening D-12.1
- Rolled Curb D-6.1
- Type A, B, D; Side Opening Only. D-1.1, D-2.1, D-4
- Type C; Side Opening w/Grate D-3.1
- Type J Median D-45

CURB OUTLET
- Concrete, Type A. D-25
- Pipe. D-27

CURTAIN WALL. D-38

CUTOFF WALL
- Alley Pavement. G-23
- Channel D-72
- Street Pavement G-22
- Trench. S-10.1

-D-

DATUMS. M-12

DEBRIS FENCE. D-82

DIKE, A.C. G-5

DISSIPATOR, ENERGY
- Concrete. D-41, D-42, D-43
- Rip Rap D-40.1

DITCH; BROW, TERRACE. D-75.1

DOWNDRAIN
- Asphalt Concrete. D-22
- Flume D-23
- Pipe. D-24

DRINKING FOUNTAIN M-18

Drawing No.

DRIVEWAY
- Concrete. G-14.1, G-26
- Location. G-15.1, G-16
- Width G-16

-E-

ELECTRICAL EQUIPMENT, PEDESTAL. . E-33

ENCASEMENT
- Sewer Pipe. S-7.1
- Sewer Pipe, Undercut. S-12

-F-

FENCE
- Chain Link. M-6.1
- Debris Fence. D-82
- Tennis Court. M-17

FIRE HYDRANT
- 6" Hydrant. W-10
- Loactions W-11.1
- Markers M-19

FLUME DOWN DRAIN. D-23

FOUNTAIN, DRINKING. M-18

FRAME
- Grate D-13
- Manhole M-1, M-2, M-3

-G-

GRATE
- Frame D-13
- Type G1 & G2. . . . . D-14.1
- Type G4 . . . . . D-15.1

GUARD RAIL, METAL BEAM
- Details M-8
- Installation. M-7

GUTTER
- Cross G-12.1
- Cross, Mid-Block. G-13.1

INDEX

Drawing No.

-H-

HEADWALL
- Gravity Type. D-32, D-33
- L Type. D-36, D-37
- Straight, Type A, B D-30, D-31
- Warped. D-44
- Wing and U Type D-34, D-35

HYDRANT MARKERS, FIRE M-19

-I-

INLET APRON D-39.1

INLET, DRAIN
- Corrugated Steel Pipe,
  - Type A & B. D-16, D-17
- Slotted,
  - Corrugated Steel Pipe . . . D-18.1, D-19

-J-

JOINT TRENCH. M-15

-L-

LATERAL
- Sewer S-13
- Sewer, Deep Cut S-14
- Sewer, Repair S-15
- Water W-1, W-2

LIGHTING
- Grounding E-2
- Ornamental. E-1

LUG, CONCRETE D-62

-M-

MANHOLE, FRAME AND COVER
- 24" Heavy Duty. M-1
- 24" Light Duty. M-2
- 36" Two Concentric Covers . . M-3
- Locking Device. M-4

Drawing No.

MANHOLE, SEWER
- 4' x 2' Diameter. S-1.1
- 4' x 3' Diameter. S-17.1
- 5' x 3' Diameter. S-2

MEDIAN CURB INLET D-45

METER BOX LOCATION. W-15

METRIC EQUIVALENTS. M-14

MONUMENT
- Bench Mark. M-11
- Street Survey M-10
- Survey. M-13

MOWING STRIP, CONCRETE. L-3

-P-

PAVEMENT, CONCRETE
- Alley Section G-21
- Joints. G-10
- Width 40' or Less G-18
- Width 40' to 62'. G-19
- Width 53' to 69'. G-20

PEDESTAL ELECTRICAL EQUIP E-33

PIPE
- Collar. D-62
- Lug D-63
- Rounded Ends. D-61
- Slotted D-18.1, D-19

PLANTING, TREE AND SHRUB. L-1, L-2

POST
- Demountable M-16
- Guard M-9.1
- Protection. W-16

-R-

RAILING, METAL BEAM M-7, M-8

INDEX

Drawing No.

-S-

SIDEWALK
- Drain Outlet. D-27
- Joint Details G-10
- Joint Locations G-9
- Monolithic Curb G-3.1
- Pipe Underdrain D-27
- Removal and Replacement . . . G-11
- Typical Section G-3.1, G-7.1

SPRINKLER
- Above Ground Installation . . I-21, I-22, I-23
- Controller Mounting I-17.1, I-18
- Connection, Main. I-28.1, I-29.1
- Head, Fixed Spray I-1
- Head, Pop Up Rotary I-3
- Head, Pop Up Spray. I-2.1
- Head, Impact. I-19.1, I-30
- Pull Box, Electrical. I-15
- Trench Detail I-25.1, I-26.1

STAKING, TREE L-2

-T-

TENNIS COURT FENCE. M-17

TERRACE DITCH D-75.1

THRUST ANCHORS
- Bearing Area. W-18
- Concrete. W-17, W-19 W-20

TRENCH DETAILS
- Irrigation. I-25.1, I-26.1
- Joint Utilities M-15
- Resurfacing G-24.1, G-25.1
- Sewer S-4.1, S-5.1, S-18
- Storm Drain D-60.1
- Water Main. W-21.1

Drawing No.

-U-

UNDERDRAIN, SIDEWALK
- Pipe. D-27
- Concrete, Reinforced. D-25

-V-

VALVE, SPRINKLER
- Check I-10.1, I-11.1
- Gate. I-12.1
- Hose Bibb I-6.1
- Manual. I-13.1, I-21
- Remote Control. I-14.1
- Quick Coupling. I-5.1, I-22
- Well. I-27

VALVE, WATER
- Air and Vacuum. W-4, W-5
- Blocking, Concrete. W-19
- Enclosure, Air and Vacuum . . W-14
- Stem Extension. W-13
- Well Installation W-12