September 2014

County of San Diego
Department of Public Works
Flood Control Section

San Diego County

HYDRAULIC DESIGN MANUAL

San Diego County
Hydraulic Design Manual

September 2014

County of San Diego
Department of Public Works
Flood Control Section

[THIS PAGE INTENTIONALLY LEFT BLANK]

TABLE OF CONTENTS

TABLE OF CONTENTS i
LIST OF APPENDICES v
LIST OF FIGURES vii
LIST OF TABLES ix
ACKNOWLEDGEMENTS xi
1 Introduction 1-1
1.0 Abbreviations/acronyms 1-1
1.1 Purpose and Scope 1-9
1.2 Policies 1-9
1.3 Drainage Law 1-10
1.4 Authority and Jurisdiction of the County of San Diego 1-10
1.5 Use of Standard Drawings 1-11
1.6 References 1-11
2 Street Drainage and Inlets 2-1
2.1 Introduction 2-1
2.2 Design Criteria 2-1
2.2.1 Roadway Drainage 2-1
2.2.2 Inlets 2-1
2.3 Design Procedure 2-4
2.3.1 Gutter Flow 2-4
2.3.2 Inlet Design 2-5
2.4 References 2-11
3 Storm Drains 3-1
3.1 Introduction 3-1
3.2 Design Criteria 3-1
3.2.1 Hydraulic Capacity 3-1
3.2.2 Manning Roughness Coefficient 3-1
3.2.3 Alignment and Curvature 3-1
3.2.4 Cleanouts 3-3
3.2.5 Required Maintenance Easement Widths 3-4
3.2.6 Deep-Cover Conduits and Culverts 3-5
3.2.7 Water-Tight Joints 3-5
3.2.8 Buoyancy 3-5
3.2.9 Pipe Abrasion 3-5

3.2.10 Allowable Materials ... 3-6
3.2.11 Storm Drain Plans ... 3-6

3.3 Hydraulic Design of Storm Drains ... 3-6

3.3.1 Basic Design Procedure ... 3-6
3.3.2 Storm Drain Analysis – Uniform Flow ... 3-7
3.3.3 Storm Drain Analysis -- Pressure Flow ... 3-7
3.3.4 Storm Drain Analysis -- HGL Calculations ... 3-8
3.3.5 Downstream Control (Tailwater) Elevation ... 3-8
3.3.6 Energy Loss Calculations ... 3-10

3.4 Outlet Protection ... 3-22

3.5 References ... 3-22

4 Culverts ... 4-1

4.1 Introduction ... 4-1

4.2 General Design Criteria ... 4-1

4.2.1 Hydraulic Criteria ... 4-1
4.2.2 Special Culvert Considerations ... 4-1

4.3 Hydraulic Design of Culverts ... 4-2

4.3.1 Inlet Control ... 4-3
4.3.2 Outlet Control ... 4-3
4.3.3 Selection of Design Condition ... 4-4
4.3.4 Outlet Velocity and Protection ... 4-4

4.4 References ... 4-4

5 Open Channels ... 5-1

5.1 Introduction ... 5-1

5.2 Types of Open Channels ... 5-1

5.2.1 Natural and Designed Alluvial-Bed Channels ... 5-1
5.2.2 Grass-Lined Channels ... 5-2
5.2.3 Wetland-Bottom Channels ... 5-2
5.2.4 Riprap-Lined Channels ... 5-2
5.2.5 Concrete-Lined Channels ... 5-2
5.2.6 Other Types of Channel Lining ... 5-3
5.2.7 Selection of Channel Type ... 5-3

5.3 General Design Criteria ... 5-3

5.3.1 Hydraulic Capacity ... 5-3
5.3.2 Manning Roughness Coefficient ... 5-3
5.3.3 Uniform Flow and Varied Flow ... 5-3
5.3.4 Vertical and Horizontal Alignment ... 5-3
5.3.5 Maximum Permissible Velocity ... 5-4
5.3.6 Subcritical and Supercritical Flow ... 5-5
5.3.7 Freeboard ... 5-6
5.3.8 Flow Transitions ... 5-7
5.3.9 Access and Safety ... 5-8
5.3.10 Environmental Permitting ... 5-9

5.3.11 Maintenance 5-9

5.4 Design Criteria – Stabilization of Existing Channels 5-9

5.4.1 Existing Channels and Channel Stabilization 5-10
5.4.2 Bank-Lined Channels 5-10
5.4.3 Bio-Engineered Channel Stabilization 5-10
5.4.4 Design of Storm Drain Outlets 5-11

5.5 Design Criteria – Grass-Lined Channels 5-11

5.5.1 Longitudinal Channel Slopes 5-11
5.5.2 Roughness Coefficient 5-11
5.5.3 Low Flow and Trickle Channels 5-11
5.5.4 Bottom Width 5-13
5.5.5 Freeboard and Flow Depth 5-13
5.5.6 Side Slopes 5-14
5.5.7 Grass Lining 5-14
5.5.8 Horizontal Channel Alignment and Bend Protection 5-14
5.5.9 Maintenance 5-14
5.5.10 Water Quality Design Parameters 5-14

5.6 Design Criteria – Wetland Bottom Channel 5-15

5.6.1 Longitudinal Channel Slope 5-15
5.6.2 Roughness Coefficients 5-15
5.6.3 Low-Flow and Trickle Channels 5-15
5.6.4 Bottom Width 5-15
5.6.5 Freeboard and Flow Depth 5-15
5.6.6 Side Slopes 5-16
5.6.7 Horizontal Channel Alignment and Bend Protection 5-16
5.6.8 Maintenance 5-16

5.7 Design Criteria – Riprap-Lined Channels 5-16

5.7.1 Longitudinal Channel Slope 5-16
5.7.2 Roughness Coefficients 5-16
5.7.3 Low Flow and Trickle Channels 5-17
5.7.4 Bottom Width 5-17
5.7.5 Freeboard and Flow Depth 5-17
5.7.6 Side Slopes 5-17
5.7.7 Horizontal Channel Alignment 5-18
5.7.8 Rock Riprap Material 5-18
5.7.9 Rock Riprap Stone Weight and Gradation 5-18
5.7.10 Riprap Thickness 5-19
5.7.11 Bedding Requirements 5-20
5.7.12 Toe Protection 5-21
5.7.13 Channel Bend Protection 5-22
5.7.14 Transition Protection 5-22
5.7.15 End Treatment and Special Conditions 5-22
5.7.16 Concrete-Grouted Riprap 5-23
5.7.17 Riprap on Steep Longitudinal Slopes 5-23

5.8 Design Criteria – Concrete-Lined Channels 5-24

5.8.1 Longitudinal Channel Slope 5-24

5.8.2 Roughness Coefficients ... 5-24
5.8.3 Channel Bottom Cross-Slope ... 5-24
5.8.4 Bottom Width ... 5-24
5.8.5 Freeboard ... 5-24
5.8.6 Concrete Lining Section ... 5-24
5.8.7 Safety ... 5-25
5.8.8 Special Consideration for Supercritical Flow ... 5-25

5.9 Design Criteria – Other Channel Linings ... 5-25

5.10 Design Procedures – General Open-Channel Flow ... 5-25

5.10.1 Uniform Flow Computation ... 5-26
5.10.2 Gradually Varying Flow ... 5-26
5.10.3 Rapidly Varying Flow ... 5-27
5.10.4 Design Procedure – Critical Flow ... 5-27
5.10.5 Design Procedures – Supercritical Flow ... 5-30
5.10.6 Design Procedures – Superelevation ... 5-32

5.11 Design Procedures – Alluvial (Movable-Bed) Channels ... 5-33

5.11.1 Basic Design Procedure ... 5-34
5.11.2 Equilibrium Slope ... 5-34
5.11.3 Composite Manning Roughness Coefficient ... 5-35
5.11.4 Sediment Supply and Transport Analysis ... 5-35
5.11.5 Upstream Sediment Supply ... 5-35
5.11.6 Erodible Sediment Size ... 5-36
5.11.7 Other Channel Scour Considerations ... 5-36

5.12 Design Procedures – Channel Grade Control and Drop Structures ... 5-36

5.12.1 Sloping Grouted Boulder Drop Structure ... 5-37
5.12.2 Drop Structures Used for Grade Control ... 5-39
5.12.3 Grade Control Sills Used for Grade Control ... 5-39

5.13 References ... 5-40

6 Detention Basins ... 6-1

6.1 Introduction ... 6-1

6.2 Design Criteria ... 6-2

6.2.1 Protection Levels (Release Rate) ... 6-2
6.2.2 Jurisdictional Dams ... 6-3
6.2.3 Grading and Embankment Slopes ... 6-3
6.2.4 Standard Features (Inlets, Outlets, and Emergency Spillways) ... 6-4
6.2.5 Detention Facility Plans ... 6-5
6.2.6 Maintenance Criteria ... 6-5
6.2.7 Conjunctive Use of Detention Facilities ... 6-6

6.3 Design Procedure - Detention Routing Analysis ... 6-6

6.3.1 Basic Data ... 6-6
6.3.2 Storage Routing Calculations ... 6-7

6.4 Design Procedure - Outlet Structures and Spillways ... 6-8

6.4.1 Culverts ... 6-8

6.4.2 Weirs 6-8
6.4.3 Orifices 6-10
6.4.4 Riser Structures 6-11
6.4.5 Perforated Risers 6-12
6.4.6 Combination Outlets 6-12
6.4.7 Trash Racks and Debris Control 6-12
6.4.8 Buoyancy 6-12

6.5 References 6-13

6.5.1 Internet Resources 6-13
6.5.2 General References 6-13

7 Energy Dissipation 7-1

7.1 Introduction 7-1

7.2 General Design Criteria 7-1

7.3 Hydraulic Design 7-1

7.3.1 Riprap Aprons 7-1
7.3.2 Stilling Basins 7-2
7.3.3 Dissipater Rings 7-3
7.3.4 Impact Structure (SD-RSD No. D-41) 7-3

7.4 References 7-4

8 Debris Barriers and Basins 8-1

8.1 Introduction 8-1

8.2 General Design Criteria 8-1

8.3 Hydraulic Design of Debris Basins and Barriers 8-1

8.3.1 Debris Racks 8-2
8.3.2 Debris Posts 8-3
8.3.3 Permanent Desiltation Basins 8-3
8.3.4 Debris Basins 8-4

8.4 References 8-4

LIST OF APPENDICES

Appendix A – Manning Roughness Coefficients

Appendix B – Pipe Material

Appendix C – Culvert Design Nomographs

Appendix WB – Hydraulic Design Manual Workbook

[THIS PAGE INTENTIONALLY LEFT BLANK]

LIST OF FIGURES

Figure 2-1.1 Flow Depth for Major, Prime, Arterial, Collector, Commercial, and Industrial Roads ... 2-12
Figure 2-1.2 Flow Depth for Major, Prime, Arterial, Collector, Commercial, and Industrial Roads ... 2-13
Figure 2-2.1 Flow Depth for All Roads ... 2-14
Figure 2-2.2 Flow Depth for All Roads ... 2-15
Figure 2-3 Recommended Inlet Location Downstream of Longitudinal Grade Change ... 2-16
Figure 2-4 6-inch Gutter and Roadway Discharge-Velocity Chart ... 2-17
Figure 2-5 8-inch Gutter and Roadway Discharge-Velocity Chart ... 2-18
Figure 2-6 Interception Capacity of Curb Opening Inlet on Continuous Grade ... 2-19
Figure 2-7 Capacity of Grate Inlets in Sump Locations ... 2-20
Figure 2-8 Slotted Drain Inlet Capacity in Sump Locations ... 2-21
Figure 3-1 Definition Sketch for Angle of Deflection (θ), Angle of Confluence (φ), and Bend Radius (Δ) ... 3-23
Figure 3-2 Definition Sketch for Storm Drain Hydraulic Calculations ... 3-23
Figure 3-3 Definition Sketch for Lugged Connections ... 3-24
Figure 3-4 Definition Sketch for Transition Cone Angle ... 3-24
Figure 3-5 Invert Benching Configurations ... 3-25
Figure 3-6 Hydraulic Properties of Circular Pipe ... 3-26
Figure 3-7 Basic Structure Head Loss Coefficients for San Diego Regional Standard Cleanouts (see Equation 3-20) ... 3-27
Figure 4-1 Definition Sketch for Culverts ... 4-5
Figure 4-2 Low-Water Crossing ... 4-6
Figure 4-3 Sample Inlet Control Nomograph ... 4-7
Figure 4-4 Sample Outlet Control Nomograph ... 4-8
Figure 5-1 Example of a Grass-Lined Channel ... 5-42
Figure 5-2 Example of Wetland-Bottom Channel ... 5-42
Figure 5-3 Example of Riprap-Lined Channel ... 5-43
Figure 5-4 Example of Concrete-Lined Channel ... 5-43
Figure 5-5 Example of Bank-Lined Channel ... 5-44
Figure 5-6 Example of Concrete Trickle Channel ... 5-44
Figure 5-7 Definition Sketch for Riprap Bank Protection Sizing ... 5-45
Figure 5-8 Specific Energy Curve ... 5-45
Figure 5-9 Supercritical Contraction Angle Definitions ... 5-46
Figure 5-10 Example of Sloping Grouted Boulder Drop Structure ... 5-46
Figure 5-11 Layout for Freeboard Superelevation Allowance ... 5-47
Figure 5-12 Design Nomographs for Riprap on Steep Channels ... 5-48
Figure 5-13 Typical Subcritical Transition Sections and Loss Coefficients ... 5-50
Figure 5-14 Minimum Stone Weight for Riprap Channel Sideslopes ... 5-51
Figure 5-15 Design Nomograph for Supercritical Contraction Transition Length and Wave Angle ... 5-52
Figure 5-16 Cross-Section Hydraulic Elements ... 5-53
Figure 5-17 Normal Depth Nomograph ... 5-54
Figure 5-18 Critical Depth Nomograph ... 5-55
Figure 5-19 Grouted Riprap Drop Structure (for Illustration Only) ... 5-56

Figure 6-1 California DSOD Jurisdictional Dam Thresholds 6-14
Figure 6-2 Example of Inflow Hydrograph and Outflow Hydrograph 6-15
Figure 6-3 Example of Stage-Discharge Curve 6-16
Figure 6-4 Sharp-Crested Weir Configurations 6-17
Figure 6-5 Typical Orifice Configurations 6-17
Figure 6-6 Hydraulic Control Through a Typical Riser Structure 6-18
Figure 6-7 Plan and Section of Typical Flood Control Detention Basin 6-19
Figure 6-8 Riser Structure Design Nomograph 6-20
Figure 7-1 San Diego Regional Standard Rock Riprap Apron Layout 7-5
Figure 7-2 Impact Basin Energy Loss Nomograph 7-6
Figure B-1 Estimated Years to Perforation for Metal Culverts B-13

LIST OF TABLES

Table 2-1 Weir Coefficients for Inlets in Sag Locations 2-7
Table 2-2 Orifice Coefficients for Inlets in Sag Locations 2-8
Table 3-1 Maximum Cleanout Spacing 3-3
Table 3-2 Allowable Pipe Sizes for Lug Connections 3-4
Table 3-3 Minimum Easement Widths 3-4
Table 3-4 Coincidental Frequency Table 3-9
Table 3-5 Simplified Lugged Connection Head Loss Coefficients 3-12
Table 3-6 Expansion Loss Coefficients Under Open Channel Conditions 3-13
Table 3-7 Contraction Loss Coefficients Under Open Channel Conditions 3-14
Table 3-8 Expansion Loss Coefficient (K_E) for Sudden Enlargement Under Pressure Flow Conditions 3-15
Table 3-9 Expansion Loss Coefficient (K_E) for Gradual Enlargement Under Pressure Flow Conditions 3-15
Table 3-10 Contraction Loss Coefficient (K_C) for Sudden Contraction Under Pressure Flow Conditions 3-16
Table 3-11 Simplified Structure Head Loss Coefficient, K 3-17
Table 3-12 Summary of Head Loss Equations 3-18
Table 3-13 Equivalent Diameters for San Diego Regional Standard Cleanouts 3-19
Table 3-14 Benching Correction Factors (C_B) 3-20
Table 3-15 Entrance Loss Coefficients for Storm Drains and Culverts (Outlet Control, Full or Partly Full) 3-21
Table 5-1 Maximum Permissible Velocities for Lined and Unlined Channels 5-5
Table 5-2 Limitations on Flow Energy for Rectangular and Trapezoidal Channels 5-6
Table 5-3 Channel Bottom Riprap Protection 5-16
Table 5-4 Standard Rock Riprap Gradations 5-17
Table 5-5 Standard Riprap Gradations 5-19
Table 5-6 Minimum Riprap Layer Thickness 5-20
Table 5-7 California Layered Rock Slope Protection 5-21
Table 5-8 Concrete-Grouted Riprap Gradations 5-23
Table 5-9 Transition Length Coefficients for Subcritical Open Channels. 5-30
Table 5-10 Superelevation Curvature Coefficients 5-33
Table 5-11 Channel Drop Structures 5-37
Table 5-12 Sloping Riprap Channel Drop Design Chart – Part 1 5-38
Table 5-13 Sloping Riprap Channel Drop Design Chart – Part 2 5-39
Table 6-1 Broad-Crested Weir Coefficient (C_{BCW}) as Function of Effective Head Over Weir and Breadth of Weir 6-10
Table 6-2 Orifice Coefficient for Different Edge Conditions 6-11
Table 7-1 Rock Size for Riprap Aprons at Storm Drain Outlets 7-2
Table 8-1 Classification of Debris 8-2
Table A-1 Average Manning Roughness Coefficients for Pavement and Gutters A-3
Table A-2 Average Manning Roughness Coefficients for Closed Conduits A-4
Table A-3 Average Manning Roughness Coefficients for Small Open Channels Conveying Less than 50 cfs A-5
Table A-4 Average Manning Roughness Coefficients for Larger Open Channels A-5
Table A-5 Average Manning Roughness Coefficients for Natural Channels A-6

Table B-1 RCP Class and Recommended Usage B-1
Table B-2 Maximum Height of Cover for RCP B-5
Table B-3 Deflection and Curvature for Straight RCP B-8
Table B-4 Radius of Curvature for Beveled RCP B-9
Table B-5 Anticipated Additional Service Life for Steel and Aluminum Pipes with Bituminous Coatings B-10
Table B-6 Maximum Height of Cover for CMP with 2-2/3” x ½” Annular and Helical Corrugations B-11
Table B-7 Maximum Height of Cover for Structural Steel Plate Circular Pipe with 6”x2” Corrugations B-12

ACKNOWLEDGEMENTS

This manual has been prepared under the direction of the San Diego County Flood Control Advisory Commission:

District No. *	Commissioner
1	Harriet Acton
2	Richard Augustine
2	Dennis Bowling
3	Paul Edward Cooley
4	Jonathan Hardy
5	Hadley Johnson
5	Kenneth Wood

** District is conterminous with Board of Supervisor's District*

The San Diego County Hydraulic Design Manual (previously titled "Hydraulic Design and Procedure Manual") was first published in December 1969, and last updated in July 2005. This Manual retains many of the design criteria from previous editions, yet makes appropriate changes keep pace with current design practice. This Manual also aims to provide more uniformity between City of San Diego and County drainage design standards.

Significant efforts on the part of County staff, project consultants, and volunteer reviewers helped shape the current edition of this Manual. Anthony Barry was the executive Project Manager for the County of San Diego. AECOM (Gerard Dalziel, Project Manager) authored the Manual, with assistance from Rick Engineering. A volunteer Advisory Committee, made up of public and private sector engineers, provided review comments and recommendations. Their time and input is greatly appreciated.

Project Management	County of San Diego, DPW, Watershed Protection Program DPW, Flood Control Section	Cid Tesoro, P.E. Sara Agahi, P.E. Anthony Barry, P.E. Jim Zhu, P.E.
Project Consultant	AECOM	Gerard Dalziel, P.E. Richard Leja, P.E. Yvana Kuhn, P.E.
Sub-Consultant	Rick Engineering	Dennis Bowling, P.E. Roberta Cronquist, P.E.
Advisory Committee	Mark Seits, P.E. (Chair)	HDR Engineering, Inc.
	Cid Tesoro, P.E.	County WPP
	Sara Agahi, P.E.	County WPP
	Jim Zhu, P.E.	County FCE
	Anthony Barry, P.E.	County FCE
	Jim Menkel, P.E.	County CIP
	Shou-Tai An, P.E.	County PDS LD
	Miles Safa, P.E.	County WPP
	Jeremy Fantaroni	County WPP
	Glen Van Peski, P.E.	City of Carlsbad
	Jim Newton, P.E.	City of Coronado

Dennis Davies, P.E.	City of El Cajon
Edward Deane, P.E.	City of Encinitas
Owen Tunnel, P.E.	City of Escondido
Marty Eslambolchi, P.E.	City of Oceanside
Jim Nabong, P.E.	City of San Diego
Lisa Adams, P.E.	City of San Diego
Jamal Batta, P.E.	City of San Diego
Rick Alzaga, P.E.	City of San Marcos
Julie Procopio, P.E.	City of Santee
Moe Zarabi	City of Santee
Eric Mosolgo, P.E.	Brown and Caldwell
David Cooper, P.E.	Bureau Veritas
Wayne Chang, P.E.	Chang Consultants
Aklilu Tesfemichael	Geosyntec
Eylon Shamir	Hydrologic Research Center
Richard Lucera, P.E.	RBF Consulting
Tory Walker, P.E.	Tory R. Walker Engineering
Luis Parra, P.E.	Tory R. Walker Engineering
Jake Gusman, P.E.	WEST Consultants
Joseph Hill, P.E.	WFS Inc.
Robert Reiner	Wynn Engineering

Others Present	Jim Hettinger, P.E.	Nolte Associates
	Justin W. Griffiths, P.E.	Nolte Associates
	Tim Brownson, P.E.	Caltrans

Much of the information and recommendations presented in this Manual are the result of previously published efforts of many talented engineers and scientists. The authors have made every effort to cite the original authors and researchers whose contributions form the basis of the Manual.

1 INTRODUCTION

1.0 ABBREVIATIONS/ACRONYMS

a	curb inlet depression
A	area
A_{in}	cross-sectional area of the inflow pipes
A_{out}	cross-sectional area of the outflow pipes
A_O	area of the orifice
A_1	surface area at elevation h_1
A_2	surface area at elevation h_2
A_e	effective (clogged) grate area
AASHTO	American Association of State Highway and Transportation Officials
ACB	articulated concrete block
AGC	Associated General Contractors
APWA	American Public Works Association
$AR^{2/3}$	section factor
b	drainage structure diameter or equivalent diameter (Equation 3-20)
	the channel bottom width (Figure 5-18)
	length of weir crest (Equation 6-11)
b_1	upstream top width of flow
b_3	downstream top width of flow
C	curvature coefficient
C_A	area clogging factor
C_B	benching correction factor
C_{BCW}	broad-crested weir coefficient
C_D	relative flow depth correction factor
C_{HO}	horizontal orifice coefficient
C_L	clogging factor
C_O	orifice coefficient (Equation 2-18; 6-12)
	relative flow correction factor (Equation 3-19; 3-22)
C_P	plunging flow correction factor
C_{SCW}	sharp-crested weir coefficient

C_W	weir discharge coefficient
cfs	cubic feet per second
Caltrans	California Department of Transportation
CAP	corrugated aluminum pipe
CIPP	cast in place concrete pipe
CMP	corrugated metal pipe
D	diameter
	hydraulic depth (Equation 5-10; 5-11)
	distance from the start of curve to point of first maximum superelevation (Equation 5-19)
d	flow depth
d_c	critical depth
D_i	inflow pipe diameter
d_o	effective depth of flow at curb face
d_{out}	depth of flow in clean out
D_o	outflow pipe diameter (Equation 3-20; 3-21; 3-23)
	diameter or width of culvert or storm drain (Equation 7-1)
D_r	minimum required diameter for a circular pipe
$\mathrm{D_r}$	apron thickness
$\mathrm{D_{rw}}$	apron thickness at crest
d_S	estimated probable maximum depth of scour
d_{50}	median diameter of bed material
DFG	Department of Fish and Game
DSOD	Division of Safety of Dams
E	energy
E	curb-opening inlet efficiency
EGL	energy grade line
$\mathrm{EGL_{i+1}}$	EGL at the upstream end of the run
$\mathrm{EGL_i}$	downstream control elevation
FCD	Flood Control District
FEMA	Federal Emergency Management Agency
FHWA	Federal Highways Administration
FIRM	Flood Insurance Rate Map
FISRWG	Federal Interagency Stream Restoration Working Group

f_0	Darcy-Weisbach friction factor
FR	Froude Number
FR_1	upstream Froude Number
FR_3	downstream Froude Number
ft	feet
ft/ft	feet per foot
ft^2	square feet
ft^3/s	cubic feet per second
fps	feet per second
g	gravitational acceleration
H	head above weir crest, excluding velocity head (Equations 6-5; 6-6; 6-7; 6-10)
	depth of water above apex of v-notch (Equation 6-9)
h	curb opening height (Equation 2-9)
	elevation of water above the orifice (Equation 6-13)
h_1	lower bounding elevation
h_2	upper bounding elevation
H_1	head above of weir crest upstream of crest
H_2	head above of weir crest downstream of crest
H_f	head loss due to pipe friction
h_{fr}	minimum required freeboard
$(h_{fr})_{SUBCRITICAL}$	minimum design freeboard for subcritical flow designs
$(h_{fr})_{SUPERCRITICAL}$	minimum design freeboard for supercritical flow designs
H_L	structure head loss
H_O	effective head above orifice (Equation 6-12)
	kinetic energy of flow entering the dissipater (Equation 7-4)
h_p	plunge height above centerline of outflow pipe
h_R	elevation of the crest of the riser orifice
H_t	energy loss
h_T	water surface elevation
H_v	velocity head
H_W	height of the weir crest
HDPE	high density polyethylene pipe
HEC-22	Federal Highway Administration's *Urban Drainage Design Manual*

HGL	hydraulic grade line
I_n	inflow rate at a time step *n*
I_{n+1}	inflow rate at a time step *n+1*
K	simplified structure head loss coefficient (Equation 3-18)
	coefficient (Equation 5-6)
	conveyance (Equation 5-9)
K_b	bend loss coefficient
K_c	contraction loss coefficient
K_e	expansion loss coefficient
K_E	expansion loss coefficient, pressure flow
K_{IN}	entrance loss coefficient
K_j	junction loss coefficient
K_O	initial or basic loss coefficient
K_{OUT}	outlet loss coefficient
K_{tc}	contraction transition coefficient
K_{te}	expanding transition coefficient
L	length
L'	length of clear opening of installed inlet
L_a	minimum riprap apron length
L_b	apron length
L_c	length coefficient (Equation 5-14)
	length of transition curve (Equation 5-19)
L_e	effective length
L_t	transition length
L_T	length of clear opening of inlet for total interception
L_W	weir length (Equation 2-8)
	characteristic wavelength (Equation 5-3; 5-4)
$(L_W)_{SUBCRITICAL}$	characteristic wavelength for subcritical flow
$(L_W)_{SUPERCRITICAL}$	characteristic wavelength for supercritical flow
lbs	pounds
Manual	Hydraulic Design Manual
MUSLE	Modified Universal Soil Loss Equation
n	Manning roughness coefficient
n_c	Manning roughness coefficient for the composite channel

n_o	Manning roughness coefficient for areas above the wetland area
n_w	Manning roughness coefficient for the wetland area
O_n	outflow rate at a time step *n*
O_{n+1}	outflow rate at a time step *n+1*
P	perimeter
P_e	effective grate perimeter length
P_o	wetland perimeter of channel cross-section above the wetland area
P_w	wetland perimeter of the wetland channel bottom
PCC	point of compound curvature
PRC	point of reverse curvature
Q	discharge (Equation 2-1; 3-9)
	interception capacity of the curb inlet (Equation 2-2)
	inlet capacity (Equation 2-8; 2-9; 2-16; 2-18)
	flow rate (Equation 3-1; 3-4; 5-8; 5-11)
	flow over weir crest (Equation 6-5; 6-7; 6-8; 6-9)
	discharge over the weir (Equation 6-10; 6-11)
	flow through the orifice (Equation 6-12; 6-13)
$Q_{APPROACH}$	total flow approaching the grate
Q_i	inflow to structure
Q_{in}	flow from the inflow
$Q_{INTERCEPT,FRONT}$	frontal discharge intercepted by grated inlet
$Q_{INTERCEPT, SIDE}$	side discharge intercepted by grated inlet
Q_L	flow from the lateral pipes
Q_o	outflow from structure
Q_{out}	flow from the outflow
Q_S	side discharge (Equation 2-12)
	flow over submerged sharp-crested weir (Equation 6-8)
Q_{SIDE}	side flow
Q_W	frontal flow approaching the grated inlet
r	radius of curvature at centerline of channel
R	hydraulic radius
RCP	reinforced concrete pipe
RE	Reynolds Number
Regional Board	Regional Water Quality Control Board

S	slope
S_c	critical slope
S_f	friction slope
S_n	storage within a detention facility at a time step n
S_{n+1}	storage within a detention facility at a time step $n+1$
S_o	longitudinal slope
S_S	specific gravity of sediment
S_x	street cross slope (not the longitudinal slope of gutter)
SD-RSD	San Diego Regional Standard Drawings
SG	specific gravity of rock riprap
STORM	Los Angeles County Flood Control District's *Storm Drain Analysis Program PC/RD4412*
SUSMP	Standard Urban Storm Water Mitigation Plan
SWRCB	State Water Resources Control Board
T	total spread of water in the roadway (Equation 2-11)
	top width of flow area (Equation 5-10; 5-11)
T_W	top width of water surface
Δt	time interval
ΔT_w	difference in the top width of the normal water surface upstream and downstream of the transition
u	mean design velocity
USACE	U.S. Army Corps of Engineers
USDOT	U.S. Department of Transportation
USFWS	U.S. Fish and Wildlife Service
v	velocity
V	velocity
V_A	bank velocity
v_C	critical velocity
v_{in}	incoming flow velocity
V_L	velocity of the lateral pipes
V_M	mean channel velocity
v_{out}	outgoing flow velocity
v_o	outflow velocity
V_O	splash-over velocity

v_O	velocity of flow entering the dissipater
v_1	upstream flow velocity
v_2	downstream flow velocity
V_1	storage volume between elevation h_1
V_2	storage volume between elevation h_2
W	width
W_e	effective width of the grate
W_{MIN}	theoretical minimum rock weight
WSPG	Los Angeles County Flood Control District Water Surface Pressure Gradient; hydraulic analysis computer software program
ΔW	difference in the top width of the normal water surface upstream and downstream of the transition
y	depth of flow
y_e	equivalent depth of flow entering the dissipater
y_1	upstream depth of flow
y_3	downstream depth of flow
Δy	allowances for other hydraulic phenomenon
Δy	rise in water surface between design water surface at centerline of channel and outside water surface elevation
z	channel side slope
Z_C	section factor for critical flow computation
θ	cone angle
	deflection angle (Equation 3-20; 3-22)
	wall angle as related to the channel centerline (Equation 5-15; 5-17)
	angle of v-notch (Equation 6-9)
φ	angle of confluence
α	outside slope face angle with horizontal
β	wave angle
β_1	initial wave angle
Δ	bend radius (Figure 3-1)
	angle of curvature (Equation 3-11)
ρ	density of water
τ_0	shear stress
γ	specific weight of water

ν	kinematic viscosity of water
$(h/2)\sin\theta$	adjustment for curb inlet throat width (h) and angle of throat incline (θ)
$\dfrac{Cv^2T_W}{rg}$	superelevation allowance
$v^2/2g$	velocity head

Definitions:

Governing Agency: municipality that will issue a permit.

1.1 PURPOSE AND SCOPE

This Hydraulic Design Manual (Manual) establishes design standards and procedures for stormwater drainage and flood management facilities in San Diego County, California. These design standards and procedures provide guidance to local jurisdictions, design engineers, developers, contractors, and others in the selection, design, construction, and maintenance of stormwater drainage and flood management facilities. This Manual covers the following topics:

- Street Drainage and Inlets
- Storm Drains
- Culverts
- Open Channels
- Detention Basins
- Energy Dissipaters
- Debris Basins and Barriers

This manual limits its content to the planning and design infrastructure in the context of stormwater conveyance and flood management. For issues of stormwater quality, readers are directed to other resources, and specifically to the San Diego County Standard Urban Storm Water Mitigation Plan (SUSMP) (2011).

1.2 POLICIES

Application of Design Standards. It is the policy of the County of San Diego that stormwater drainage and flood management facilities adhere to the criteria presented in this Manual whenever possible. Governmental agencies and engineers shall utilize this Manual in planning new facilities and in their review of proposed work by developers, private parties, and other government agencies where the County has discretionary approval of these projects.

Exceptions to Design Standards. The County of San Diego recognizes that it is not possible to prescribe design standards and procedures for all situations. For instance, there are many already-developed areas within the San Diego region that do not fully conform to the drainage standards presented in this Manual. Upgrading existing facilities in previously developed areas to conform to all policies, criteria, and standards outlined in this Hydraulic Design Manual can be difficult, if not impractical, outside the context of complete redevelopment or renewal.

Exceptions may be made when the Director of Public Works determines that (1) the strict application of the design and procedures to a specific situation may result in unreasonable requirement for a particular project; and (2) an exception to standard drainage criteria would not detrimental to public health, life, or safety.

The design standards and procedures outlined in this Manual have been formulated so that their application in the overall planning and design of drainage and flood management facilities should be reasonable, practical, and economical in the vast majority of situations, so that such exceptions should be quite rare.

Engineers and planners should also consider that certain critical facilities might require a higher level of protection than the minimum protection levels stated in this Manual. Governing Agencies may require that critical infrastructure or emergency facilities have additional protection so their functioning will not be compromised during large flood events. Such

extraordinary protection levels will be considered on a case-by-case basis at the discretion of County of San Diego or governing agency.

Preference for Natural Conveyance Systems. The County of San Diego recognizes the inherent benefits of natural conveyance systems and systems designed with natural materials (i.e., drainageways and channels lined with vegetation rather than concrete or hardscape material) for protecting the beneficial uses of local water resources. These benefits include enhanced water quality and habitat, as well as aesthetic value. Therefore, the County prefers natural or naturally-lined conveyance systems as the most desirable form of drainage and flood management facilities. Natural or naturally-lined conveyance systems should be used whenever feasible from an economic and design standpoint, and when such a conveyance system would not be detrimental to public health, life, or safety.

Update of Design Standards. The criteria described by this Manual shall be revised and updated as necessary to reflect advances in drainage engineering and water resources management.

1.3 DRAINAGE LAW

The body of legal case law concerning drainage is too extensive for a comprehensive discussion in this Manual. However, there are many legal principles that might affect landowners and the design engineers involved in the design, construction, and maintenance of drainage facilities. Drainage law in California is based on several principles that can essentially be described as "good neighbor" policies of what constitutes reasonable action (for example, Keys v. Romley, 1966 et al.). These principles are:

- Every landowner has right to discharge surface water in a reasonable manner.
- Lower landowners have an obligation to accept upper landowners naturally flowing surface waters.
- Every landowner must take reasonable care to avoid damage to adjacent properties.

Many court decisions regarding drainage law have based upon these principles. For instance, it is generally accepted that upstream landowners may not increase the volume or velocity of surface flows to the detriment of downstream landowners. Readers of this Manual are encouraged to have a familiarity with drainage law and practice their drainage design, construction, and maintenance in a manner consistent with "good neighbor" policies.

1.4 AUTHORITY AND JURISDICTION OF THE COUNTY OF SAN DIEGO

The California State Legislature passed the Flood Control District Act in 1966, and then amended it in 1985. The Flood Control District Act created the San Diego County Flood Control District (FCD) and authorized it to protect the land, properties, facilities, and people within the unincorporated areas of the County from damage caused by storm and floodwaters. Further legislative authorizations for the FCD and its activities pertaining to stormwater drainage and flood management can be found in the following sources:

<u>State of California Subdivision Map Act</u>

- Division 2 Chapter 4 Article 1 §66474.7
- Division 2 Chapter 4 Article 5 §66483
- Division 2 Chapter 4 Article 6 §66488

San Diego County Code of Regulatory Ordinances

- Watershed Protection, Stormwater Management, and Discharge Control Ordinance (Title 6, Division 7, Chapter 8)
- Excavation And Grading, Clearing, And Watercourses Ordinance (Title 8, Division 7)
- Flood Damage Prevention Ordinance (Title 8, Division 11)
- Subdivision Ordinance (Title 8, Division 1)
- Drainage Fee Ordinance (Title 8, Division 10, Chapter 2)
- County Building Code (Title 5, Division 1)
- Resource Protection Ordinance (Ordinance Nos. 7968, 7739, 7685 and 7631)
- Zoning Ordinance (Ordinance No. 5281; Part 5, Sections 5307 b and c, 5450-5472, and 5500-5522)

1.5 USE OF STANDARD DRAWINGS

This Manual incorporates by reference the San Diego Regional Standard Drawings (SD-RSD), and designers may safely assume that these standard drawings are compatible with the guidelines presented in this Manual. Standard drawings published by the American Public Works Association (APWA) for Southern California, the California Department of Transportation (Caltrans), Los Angeles County Department of Public Works, and Orange County Department of Public Works might be appropriate for use when the San Diego Regional Standards are silent regarding a particular design situation. Other resources may also be used for the design of stormwater drainage and flood management facilities, subject to review and approval by the governing agency.

1.6 REFERENCES

County of San Diego. (January 2011). County of San Diego Standard Urban Storm Water Mitigation Plan. San Diego, California.

[THIS PAGE INTENTIONALLY LEFT BLANK]

2 STREET DRAINAGE AND INLETS

2.1 INTRODUCTION

Roadway drainage and inlet design are critical components of a stormwater drainage system. The surface drainage system must be consistent with the capacity of the storm conveyance system immediately downstream (discussed in Section 3). The design of roadway drainage and inlets is guided by the following principles:

- Promote the safe passage of pedestrian and vehicular traffic, and maintain public safety and manage flooding during storm events.
- Minimize capital and maintenance costs of the drainage system.

This chapter summarizes the general design criteria for roadway drainage and inlet design in San Diego County and describes the methods to apply when designing these drainage systems.

2.2 DESIGN CRITERIA

The capacity of surface drainage system (street capacity and inlet interception capacity) must be consistent with that of the stormwater conveyance system immediately downstream. The roadway conveyance capacity is constrained by the width, depth, and velocity of flow.

2.2.1 Roadway Drainage

1. Roadway cross-sections must have the capacity to convey the peak discharge from a 50-year design event, within constraints on flow width, depth, and velocity.
2. For prime arterial, major, collector, commercial, and industrial roads the maximum flow width is 20 feet or to the top of curb or dike, if present, whichever is less, during the 100-year design event (Figure 2-1.1 and Figure 2-1.2).
3. All road cross-sections must have the capacity to convey the peak discharge from a 100-year design event without causing damage to property adjacent to the right-of-way. In practice, this means that the peak 100-year discharge must be contained within the limits of the right-of-way of the road cross-section (Figure 2-2.1).
4. The maximum depth of flow in the roadway shall allow 0.1 foot (1.2 inches) of freeboard below the top of curb during a 50-year design event (Figure 2-2.2).
5. The maximum value of the product of the mean velocity times the maximum depth shall be less than 6 ft^2/second. Section 2.3 discusses the calculation of flow width, depth, and velocity.

2.2.2 Inlets

2.2.2.1 Inlet Location

Mandatory Inlet Locations

Storm drain inlets must be placed at prescribed locations in order to protect the public safety and provide a minimally functional storm drainage system. These locations include:

1. Locations where flow in roadway cross-section exceeds the limitations prescribed in Section 2.2.1, above;

2. Low points in the roadway profile, such as sumps;
3. On the upstream side of super-elevated roadway cross-sections (located in a manner such that no more than 0.1 acre contributes to flow crossing traffic lanes);
4. At intersections where flow is directed towards the intersection without relief from a cross gutter; and
5. Bridge transitions.

The designer shall locate inlets in a manner to minimize the necessity of cross-gutters, and avoid locating inlets where they would necessitate a local depression at the median.

Recommended Inlet Locations

The designer may desire to locate inlets at locations in addition to the minimally prescribed locations in order to improve the function of a storm drain system. These locations include:

1. Locations where there is a change to the roadway cross-slope.
2. Downstream of changes in roadway longitudinal slope, especially in locations of reduced roadway grade to prevent sedimentation and increase safety. Locating inlets at the downstream side of longitudinal roadway grade changes allow the designer to utilize the higher depth developed by the reduced longitudinal grade in the roadway. Because water depth changes gradually due to momentum, it is more efficient to locate the inlet a minimum distance from the beginning point of the vertical curve (Figure 2-3).

Local Street Intersections with Arterial or Collector Streets. Where local streets intersect with arterial or collector streets, the grade of the arterial or collector street shall continue uninterrupted. For drainage purposes, a cross gutter may be used perpendicular to the local street to covey flow across the intersection when necessary. The cross gutter shall be sufficient to convey runoff across the intersection with a spread equivalent to that allowed on the street.

Collector or Arterial Street Intersections. In the case where two collector or arterial streets intersect, the longitudinal grade of the more major street shall be maintained as much as possible. No form of cross gutter shall be constructed across major streets for drainage purposes. Cross gutters across the intersection may be considered for collector streets, but only in rare cases and with governing agency approval.

2.2.2.2 Inlet Capacity

Capacity of Inlets on Continuous Grade

Inlets on continuous grade shall be designed to intercept a minimum of 85 percent of the peak discharge from the 50-year design event wherever practical. That is to say, 15 percent of the flow may be allowed to bypass the inlet. The bypassed flow must be included in the capacity calculations for the next downstream inlet, whether it be on continuous grade or within a sump.

Capacity of Inlets in Sumps

Inlets located in sump locations must be able to intercept the peak discharge from a 100-year design event. Inlets within sump locations require a secondary (emergency) outlet for sump waters whenever practical. Designers should note that the secondary outlet need not be another drainage structure, but might be accomplished by a swale (with appropriate drainage easement, when needed) that allows water to flow between dwelling units (See Section 2.2.1).

2.2.2.3 Inlet Types and Configurations

There are four basic types of inlets (catch basins) that may be applied within the context of roadway drainage: (1) curb-opening (standard) catch basins; (2) grated catch basins; (3) combination curb-opening-grated catch basins; and (4) slotted drain catch basins. In addition to roadway drainage catch basins, there are similar catch basins that may be applied in contexts outside of the roadway.

Standard Curb-Opening Inlets

Standard curb-opening inlets are usually the most practical type of roadway drainage. They tend to resist clogging and offer little interference to vehicular, bicycle, or pedestrian traffic. Depressed curb inlets are more efficient hydraulically than curb inlets without a depression.

Grated Catch Basin Inlets

Grated catch basins are openings in the gutter that are covered by one or more grates, through which water flows. When located on flat continuous grades, grate inlets can be more efficient than curb-opening inlets. The design of a grate inlet must consider hydraulic efficiency; vehicular, bicycle and pedestrian safety; and structural adequacy.

The efficiency of a grated inlet on a continuous grade increases when part of the flow is allowed to bypass the inlet because there is a greater depth of flow over the grate. Grated catch basin inlets are generally not recommended in the following situations:

- at median curbs;
- in sumps or where the roadway grade is less than one percent;
- on roadways with a grade of greater than five percent, unless used in combination with a curb opening when practical.

The designer is advised to keep pedestrian and vehicular considerations in mind when proposing grated catch basins, as they have a potential to interfere with vehicular, bicycle, and pedestrian traffic. Grated inlets must not extend into traffic lanes. Grated inlets shall always be designed perpendicular to the path of travel (for bike lanes).

Combination Catch Basin Inlets

Combination inlets allow designers to take advantages of the features of both curb opening inlets and grate inlets. When a grate inlet is desired, a combination inlet is recommended wherever practical.

Slotted Drain Catch Basin Inlets

A slotted drain intercepts sheet flow and conveys it through a pipe immediately below the slots and parallel to the curb. Slotted drain catch basin inlets are most effective when street slopes are shallow. Their primary advantage is that they offer little interference to vehicular, bicycle, or pedestrian traffic.

Inlet Configuration

With combination inlets, the grate inlet must be located on the downstream side of the curb opening when the combination inlet is located on continuous grade, or in the middle of the curb opening when the inlet is located within a sump. This allows the curb opening to skim off debris and prevent clogging of the grate.

2.2.2.4 Inlet Depression

When a shoulder or parking lane separates the curb inlet from traffic lanes, a maximum depression depth of 0.33 feet (4 inches) is allowed; when an inlet is adjacent to traffic lanes (for instance, at medians), 0.17 feet (2 inches) of depression is allowed.

2.2.2.5 Advantages and Disadvantages of Inlet Systems

a. Care should be taken when placing depressed curb inlets on high speed collector or arterial roadways that require the use of metal beam guard railing. The current Caltrans Standard Plan for the installation of metal beam guard railing requires that if dike is required the maximum height is 4" and 2" under and upstream of the end of treatment. Since a depressed curb inlet has a curb height of 10" it is not in compliance with the Caltrans Standard Plan.

b. Depressed curb inlets require a 10' transition in curb height; depending on location this transition can also interfere with the placement of curb ramps depending on the inlet's location.

c. Slotted drains are difficult to clean as they provide limited access. Their use is also a problem when overlaying a roadway as they create a trough which may be a problem for bicycles.

d. Trench drains should be added as an alternative to slotted pipe; it is easier to maintain and can be raised with overlay projects.

2.3 DESIGN PROCEDURE

2.3.1 Gutter Flow

This manual calculates flow depth and velocity under the assumption of uniform flow for typical roadway cross-sections with 6-inch and 8-inch curb heights, standard gutter widths, and 2 percent cross-slope. The conveyance is determined using the Uniform Flow (Manning) Equation:

$$Q = \frac{1.49}{n} A R^{2/3} S^{1/2} \qquad (2\text{-}1)$$

where...

Q = discharge (ft^3/s);
n = Manning roughness coefficient (Imperial dimensions consistent with the 1.49 coefficient);
A = flow area (ft^2);
R = hydraulic radius (ft); and
S = longitudinal gutter slope (not roadway cross-slope) (ft/ft).

Figure 2-4 and Figure 2-5 provide the depth and velocity of flow versus the longitudinal slope and discharge for standard 6-inch and 8-inch curb and gutter configurations, respectively. The designer is referred to the Federal Highway Administration's *Urban Drainage Design Manual* (HEC-22) for guidance for other curb and gutter configurations. Curb and gutter configurations other than a San Diego Regional Standard 6-inch curb and gutter require prior approval from the governing agency. For projects within the unincorporated areas of San Diego County, approval from the Transportation Division will be required.

2.3.2 Inlet Design

2.3.2.1 Curb Inlets

Curb Inlets on Grade

Full Interception

The capacity of a curb inlet on continuous grade depends on gutter slope, depth of flow in the gutter, the dimensions of the curb opening, and the amount of depression at the catch basin. Equation 2-2 describes the capacity (Q) of a curb inlet assuming full (100 percent) interception.

$$Q/L_T = 0.7\left(a+y\right)^{3/2} \qquad (2\text{-}2)$$

where …

Q = interception capacity of the curb inlet (ft^3/s);
y = depth of flow approaching the curb inlet (ft);
a = depth of depression of curb at inlet (ft);
L_T = length of clear opening of inlet for total interception (ft).

Figure 2-6 illustrates the relationship between interception capacity, depth of approaching flow, and curb inlet depression, and may be used to determine curb inlet interception capacity. Section 2.3.1 describes the method used to calculate the depth of flow approaching the curb inlet. When a shoulder or parking lane separates the curb inlet from traffic lanes, a maximum depression depth of 0.33 feet (4 inches) is allowed; when an inlet is adjacent to traffic lanes (for instance, at medians), 0.17 feet (2 inches) of depression is allowed (see Section 2.2.2.4). The minimum curb opening length is L'=4 feet (L=5 feet); the maximum curb opening length is L'=20 feet (L=21 feet). The total length of the curb inlet (L) includes the length of the upstream and downstream face of the curb inlet (equal to an additional 1 foot of length for a SD-RSD Type B inlet).

Partial Interception

It is not always possible to intercept all gutter flow with a single inlet, and a portion of the approaching flow will continue past the inlet area as "bypass flow." The curb inlet must intercept a minimum of 85 percent of the approaching flow where practical (see Section 2.2.2.2). The designer may account for this flow bypass using the following procedure:

Step 1. Determine the clear opening length required to intercept 100 percent of the approaching flow, L_T:

$$L_T = \frac{Q_{APPROACH}}{0.7\left(a+y\right)^{3/2}} \qquad (2\text{-}3)$$

Step 2. Compute the efficiency (E) for the opening length (L') of the curb inlet to be installed:

$$E = 1-\left[1-\left(\frac{L'}{L_T}\right)\right]^{1.8} \quad for\ L' < L_T \qquad (2\text{-}4)$$

where ...

E = curb-opening inlet efficiency;
L' = length of clear opening of installed inlet (ft); and

L_T = length of clear opening of inlet for total interception (ft).

For the minimum required efficiency of E=0.85, this general equation reduces to the following expression:

$$L'_{E=0.85} = 0.65 L_T \qquad (2\text{-}5)$$

Step 3. Calculate the amount of flow intercepted by the inlet and the bypass flow, and apply to the bypass flow to the roadway flow calculations and inlet capacity calculations downstream.

$$Q_{INTERCEPT} = EQ_{APPRROACH} \qquad (2\text{-}6)$$

$$Q_{BYPASS} = Q_{APPROACH} - Q_{INTERCEPT} = (1 - E) Q_{APPROACH} \qquad (2\text{-}7)$$

Curb Inlets in Sag

Curb inlets in sags or sump locations operate as weirs at shallow depths, and operate as orifices as water depth increases. The designer shall estimate the capacity of the inlet under each condition and adopt a design capacity equal to the smaller of the two results. When designing the size of a facility, the designer shall use the larger of the sizes obtained by solving for the two conditions.

Inlets in sumps act as weirs for shallow depths, which can be described using Equation 2-8:

$$Q = C_W L_W d^{3/2} \qquad (2\text{-}8)$$

where ...

Q = inlet capacity (ft^3/s);
C_W = weir discharge coefficient (see Table 2-1)
L_W = weir length (ft); and
d = flow depth (ft).

Table 2-1 presents appropriate weir coefficient values and lengths for various inlet types.

At higher flow depths, curb inlets operate in a manner more typical of an orifice (Equation 2-9).

$$Q = 0.67 hL(2gd_o)^{1/2} \qquad (2\text{-}9)$$

where ...

Q = inlet capacity (ft^3/s);
h = curb opening height (ft);
L = curb opening length (ft);
g = gravitational acceleration (ft^2/s); and
d_o = effective depth of flow at curb face (ft).

Table 2-1 Weir Coefficients for Inlets in Sag Locations

Inlet Type	Coefficient	Weir Length	Equation Valid
	C_W	L_W	
Grate Inlet Against Curb	3.00	$L+2W$ (1)	$d<1.79\left(A_o/L_W\right)$
Grate Inlet, Flow from All Sides	3.00	$2(L+W)$ (1)	$d<1.79\left(A_o/L_W\right)$
Curb Opening Inlet	3.00	L'	$d<h$
Depressed Curb Opening Inlets Less than L'=12 ft(2)	3.00	$L'+1.8W$	$d<h$
Slotted Inlets	2.48	L (1)	$d<0.2\ ft$

(1) Weir length shall be reduced by 50% to account for clogging. (2) "Depressed Curb Opening Inlets" refers to curb inlets with depression larger the width of the gutter (for example, SD-RSD No. 20, "Concrete Apron for Curb Inlet"). The width (W) of the curb opening depression is measured perpendicular to the face of the curb opening.

The effective depth of flow at the curb face includes the curb depression, and must be adjusted for the curb inlet throat configuration. The San Diego Regional Standard curb inlet opening (SD-RSD No. D-12) has an inclined throat, and therefore the effective depth of flow at the curb face is given by the expression:

$$d_o=(y+a)-\frac{h}{2}\sin\theta \qquad (2\text{-}10)$$

where ...

y = depth of flow in adjacent gutter (ft);

a = curb inlet depression (ft);

$(h/2)\sin\theta$ = adjustment for curb inlet throat width (h) and angle of throat incline (θ). For a standard 6-inch curb inlet opening with a 4-inch depression (SD-RSD No. D-12), $(h/2)\sin\theta$=3.1 inches (0.26 ft).

Table 2-2 presents appropriate orifice coefficient values and lengths for various inlet types. In general, if an inlet is functioning as an orifice, the depth of flow is very deep and it is recommended that the design of the inlet be re-considered to avoid this condition.

2.3.2.2 Grated Inlets

Grated Inlets on Grade

The capture efficiency of grated inlets on grade depends on the width and length of the grate and the velocity of the flow approaching the grate. When the approaching flow velocity is slow and the flow width does not exceed the grate width, the grate inlet might be able to intercept all of the approaching flow. In cases where the width of the approaching flow exceeds the grate width, very little of the approaching flow that exceeds the grate width will be intercepted by the inlet. When the velocity of the approaching flow is too high, the flow will "splash over" the grate. Both these phenomena contribute to flow bypass of grate inlets, which is analogous to the bypass flow discussed in relation to curb opening inlets on grade.

Table 2-2 Orifice Coefficients for Inlets in Sag Locations

Inlet Type	Coefficient	Orifice Area	Equation Valid
	C_O	A_O	
Grate Inlet	0.67	Clear Opening Area (1),(2)	$d > 1.79\left(A_O / L_W\right)$
Curb Opening Inlet	0.67	hL	$d + \left(h/2\right) > 1.4h$
Slotted Inlets	0.80	LW (2)	$d < 0.4\,ft$

(1) Actual grate opening area for SD-RSD No. 15 Drainage Structure Grate is A_O=4.7 ft^2. (2) Orifice area shall be reduced by 50 percent to account for clogging

The actual length and width of the grate is the overall dimension of the grate less the width of any bars or vanes. A single San Diego Regional Standard No. D-15 grate has an actual length of L=3.0 ft and an actual width of W=1.6 ft. To account for the effects of clogging of grated inlet on grade, the actual length and width of the grate is reduced by a factor of fifty percent (C=0.50). Therefore, the effective length and width of a SD-RSD D-15 grate inlet are L_e=1.5 ft and W_e=0.8 ft, respectively. The Federal Highway Administration's *Urban Drainage Design Manual* (HEC-22) provides guidance for other grate types and configurations.

The procedure to determine the interception capacity of a grated inlet on grade is as follows:

Step 1. Divide the flow approaching the inlet ($Q_{APPROACH}$) into frontal discharge (Q_W) and side flow (Q_S), (i.e., flow exceeding the width of the grate).

$$Q_W = Q_{APPROACH}\left[1-\left(1-\frac{W_e}{T}\right)^{2.67}\right] \qquad (2\text{-}11)$$

$$Q_S = Q_{APPRROACH} - Q_W \qquad (2\text{-}12)$$

where ...

Q_W = portion of approaching flow within the width of the grate (ft^3/s);
$Q_{APPROACH}$ = total flow approaching the grate (ft^3/s);
T = total spread of water in the roadway (ft);
Q_S = side discharge (ft^3/s); and
W_e = effective width of the grate (ft). A San Diego Regional Standard No. D-15 grate has an effective width W_e=0.8 ft. The Federal Highway Administration's *Urban Drainage Design Manual* (HEC-22) provides guidance for other grate types and configurations.

Step 2. Compare the approach velocity to the splash-over velocity. The splash-over velocity for a single San Diego Regional Standard No. D-15 grate is 2.0 fps. The designer is referred to the Federal Highway Administration's *Urban Drainage Design Manual* (HEC-22) for guidance for other grate types and configurations. When the approach velocity is less than the splash-over velocity, it can be assumed that the grate intercepts all of the approaching frontal discharge. When the approach velocity exceeds the splash-over velocity, calculate the amount of frontal discharge (Q_W) intercepted by the grate. This is determined by Equation 2-13:

$$Q_{INTERCEPT,FRONT} = \left(1.0 - 0.09\left(V - V_O\right)\right)Q_W \qquad (2\text{-}13)$$

where ...

$Q_{INTERCEPT,FRONT}$ = frontal discharge intercepted by grated inlet (ft^3/s);
V = velocity of flow approaching inlet (ft/s);
V_O = splash-over velocity (V_O=2.0 ft/s for a standard D-15 grate); and
Q_W = frontal flow approaching the grated inlet (ft^3/s).

Step 3. Determine the amount of side flow (Q_{SIDE}) that is intercepted by the grate.

$$Q_{INTERCEPT,SIDE} = \frac{Q_{SIDE}}{\left(1 + \frac{0.15V^{1.8}}{S_x L_e^{2.3}}\right)} \qquad (2\text{-}14)$$

where ...

$Q_{INTERCEPT,\,SIDE}$ = side discharge intercepted by grated inlet (ft^3/s);
Q_{SIDE} = side flow (i.e., flow outside the width of the grate) (ft^3/s);
V = velocity of flow approaching inlet (ft/s);
S_x = street cross slope (<u>not</u> the longitudinal slope of gutter) (ft/ft); and
L_e = effective length of the grate (ft). A San Diego Regional Standard No. D-15 grate has an effective length of L_e=1.5 ft. The Federal Highway Administration's *Urban Drainage Design Manual* (HEC-22) provides guidance for other grate types and configurations.

Step 4. Calculate the amount of flow intercepted by the inlet and the bypass flow, and apply the bypass flow to the roadway flow calculations and inlet capacity calculations downstream.

$$Q_{INTERCEPT,TOTAL} = Q_{INTERCEPT,SIDE} + Q_{INTERCEPT,FRONT} \qquad (2\text{-}15)$$

Grated Inlets in Sag

A grated inlet in a sag location operates as a weir at shallower depths, and as an orifice at larger depths. The transition from weir flow to orifice flow depends on factors such as grate size and bar configuration. The designer shall estimate the capacity of the inlet under both weir flow and orifice flow conditions, then adopt a design capacity equal to the smaller of the two results. Figure 2-7 provides a nomograph for calculating the capacity of grated inlets in sag locations.

Step 1. Calculate the capacity of a grate inlet operating as a weir, using the weir equation (Equation 2-16) with a length equivalent to perimeter of the grate. When the grate is located next to a curb, disregard the length of the grate against the curb.

$$Q = C_W P_e d^{3/2} \qquad (2\text{-}16)$$

where …

Q = inlet capacity of the grated inlet (ft^3/s);
C_W = weir coefficient (C_W=3.0 for U.S. Traditional Units);
P_e = effective grate perimeter length (ft); and
d = flow depth approaching inlet (ft).

To account for the effects of clogging of a grated inlet operating as a weir, a clogging factor of fifty percent (C_L=0.50) shall be applied to the actual (unclogged) perimeter of the grate (P):

$$P_e = (1 - C_L)P \qquad (2\text{-}17)$$

where ...

P_e = effective grate perimeter length (ft);
C_L = clogging factor (C_L=0.50); and
P = actual grate perimeter (ft) (i.e., the perimeter less the total width of bars or vanes); $P=2W+L$ for grates next to a curb and $P=2(L+W)$ for grates with flow approaching from all sides. A single San Diego Regional Standard No. D-15 grate has an actual perimeter of P=6.2 ft when placed against curb and P=9.2 ft when flow approaches from all sides.

Step 2. Calculate the capacity of a grate inlet operating as an orifice. Use the orifice equation (Equation 2-18), assuming the clear opening of the grate reduced by a clogging factor C_A=0.50 (Equation 2-19). A San Diego Regional Standard No. D-15 grate has an actual clear opening of A=4.7 ft^2. The Federal Highway Administration's *Urban Drainage Design Manual* (HEC-22) provides guidance for other grate types and configurations.

$$Q = C_O A_e \left(2gd\right)^{1/2} \qquad (2\text{-}18)$$

$$A_e = (1 - C_A)A \qquad (2\text{-}19)$$

where …

Q = inlet capacity of the grated inlet (ft^3/s);
C_O = orifice coefficient (C_O=0.67 for U.S. Traditional Units);
g = gravitational acceleration (ft/s^2);
d = flow depth above inlet (ft);
A_e = effective (clogged) grate area (ft2);
C_A = area clogging factor (C_A=0.50); and
A = actual opening area of the grate inlet (i.e., the total area less the area of bars or vanes). The actual opening area for a San Diego Regional Standard No. D-15 grate is A=4.7 ft^2. The Federal Highway Administration's *Urban Drainage Design Manual* (HEC-22) provides guidance for other grate types and configurations.

Step 3. Use more conservative of the two results.

2.3.2.3 Combination Inlets

The procedure for calculating the capacity of a combination of a curb opening inlet and grate inlet assumes that the curb opening inlet is placed upstream of the grated inlet.

Step 1. Determine the portion of flow intercepted by the curb-opening part of the inlet (see Section 2.3.2.1).

Step 2. Determine the depth, width, and velocity of the flow that bypasses the curb opening part of the inlet.

Step 3. Determine the portion of flow intercepted by the grated inlet (see Section 2.3.2.2).

2.3.2.4 Slotted Inlets

Slotted drains shall only be specified with prior agency approval. When located on a grade, slotted inlets function as a side-flow weir, much like curb-opening inlets. The Federal Highway

Administration (FHWA, 1996) suggests that the hydraulic capacity of slotted inlets corresponds closely to the hydraulic capacity of curb-opening inlets when the slot openings are greater than 1.75 inches. Therefore, the designer may use the equations developed for curb opening inlets presented in Section 2.3.2.1 when the slot openings are greater than 1.75 inches. When located in a sump, slotted inlets can function either as a weir or an orifice. As with grated inlets, the designer shall estimate the capacity of the inlet under both weir flow and orifice flow conditions, then adopt a design capacity equal to the smaller of the two results. Table 2-1 and Table 2-2 provide guidance for the appropriate coefficients to apply in the weir and orifice equations. Figure 2-8 presents a nomograph for the design of slotted inlets in sumps.

As with grate inlets, a clogging factor (C_L) shall be applied to the actual (unclogged) length of a slotted inlet (L):

$$L_e = (1 - C_L)L \qquad (2\text{-}20)$$

where ...

L_e = effective grate perimeter length;
C_L = clogging factor (C_L=0.50); and
L = actual (unclogged) length of the slotted inlet (ft)

2.4 REFERENCES

American Public Works Association. (1981) "Urban Storm Water Management." Special Report No. 49.

American Society of Civil Engineers. (1992). *Design and Construction of Urban Stormwater Management Systems.* ASCE Manual of Practice No. 77/WEF Manual of Practice No. FD-20. New York.

Orange County (California) Environmental Management Agency. (January 1996). *Orange County Local Drainage Manual*.

U.S. Department of Transportation, Federal Highway Administration. (August 2001). *Urban Drainage Design Manual, 2nd Edition.* Hydraulic Engineering Circular No. 22. FHWA-NHI-01-021.

U.S. Department of Transportation, Federal Highway Administration. (September 2001). Hydraulic Design Of Highway Culverts, Hydraulic Design Series No. 5, 2nd Edition. FHWA-NHI-01-020.

Figure 2-1.1

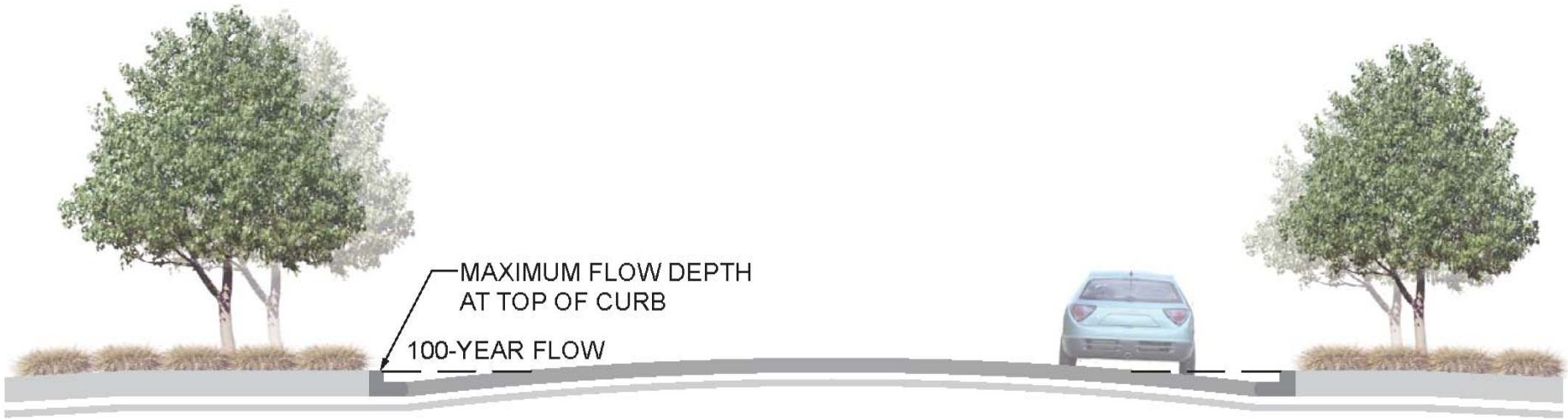

Figure 2-1.1 Flow Depth for Major, Prime, Arterial, Collector, Commercial, and Industrial Roads

Figure 2-1.2

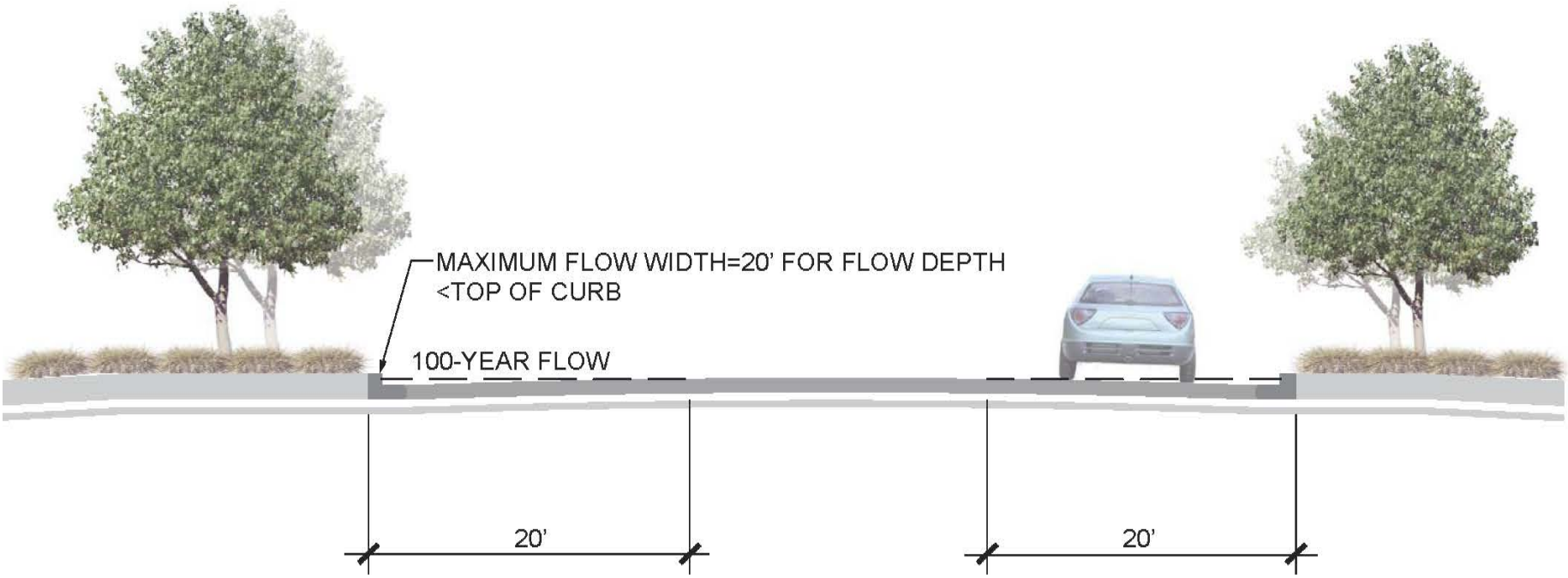

Figure 2-1.2 Flow Depth for Major, Prime, Arterial, Collector, Commercial, and Industrial Roads

Figure 2-2.1

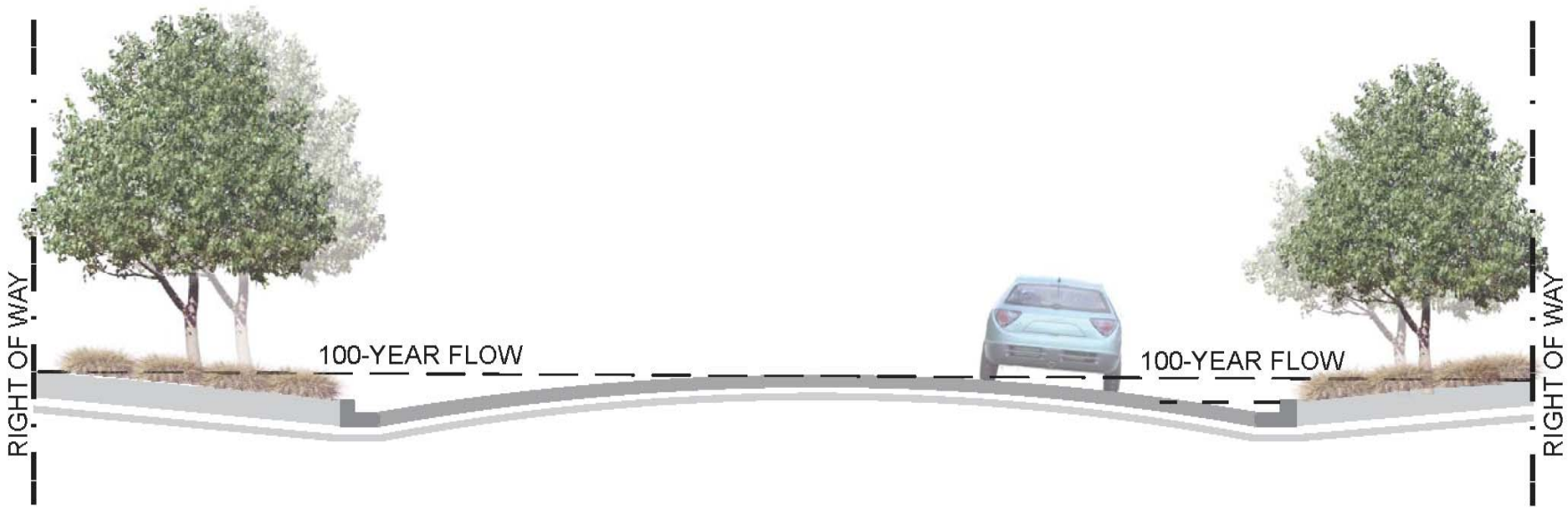

Figure 2-2.1 Flow Depth for All Roads

Figure 2-2.2

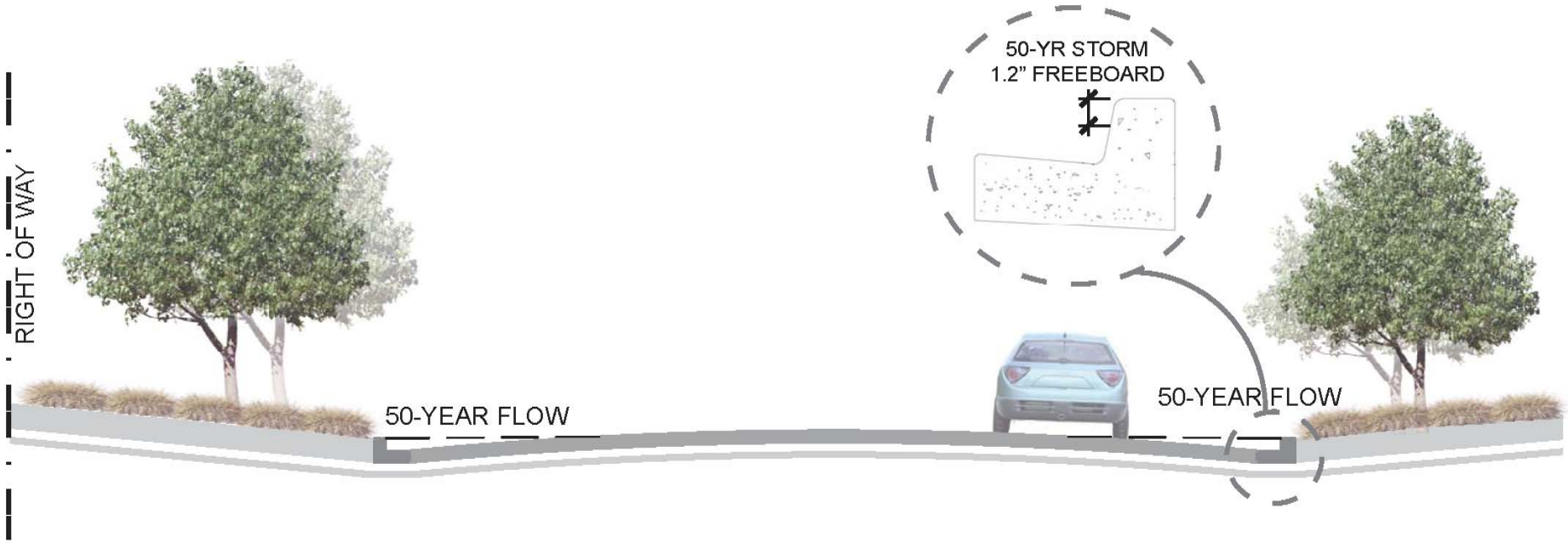

Figure 2-2.2 Flow Depth for All Roads

Figure 2-3

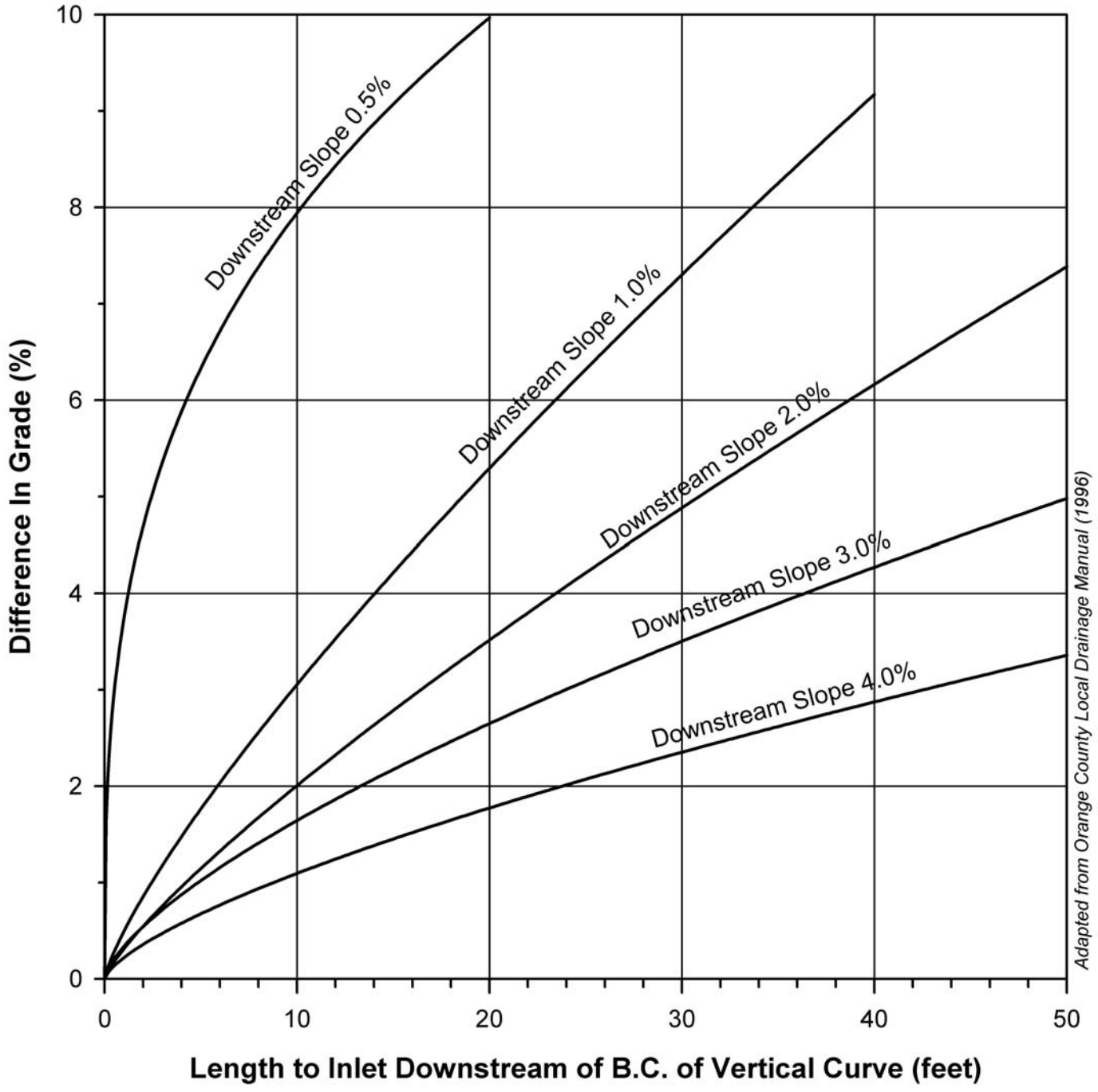

Figure 2-3 Recommended Inlet Location Downstream of Longitudinal Grade Change

Figure 2-4

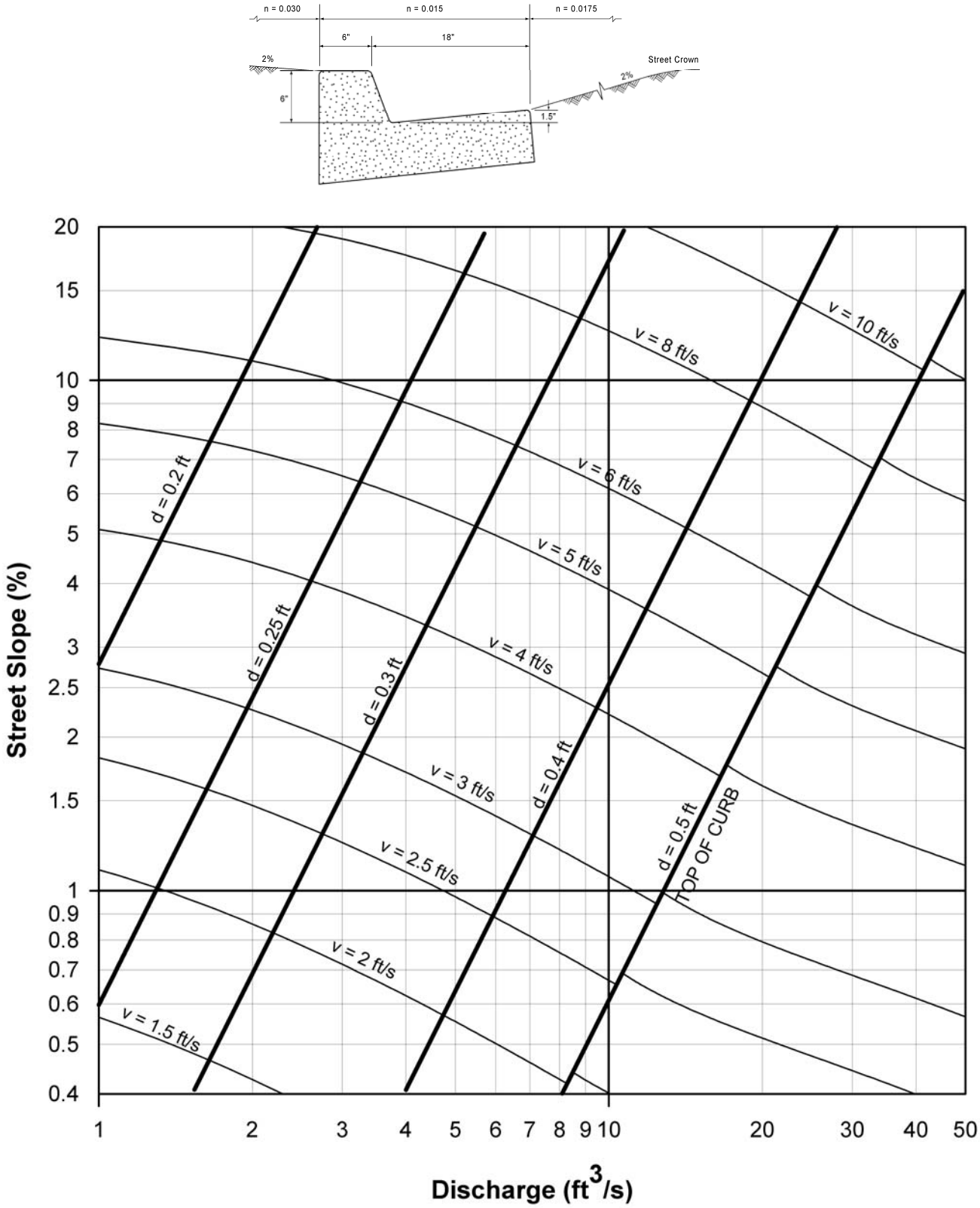

Figure 2-4 6-inch Gutter and Roadway Discharge-Velocity Chart

Figure 2-5

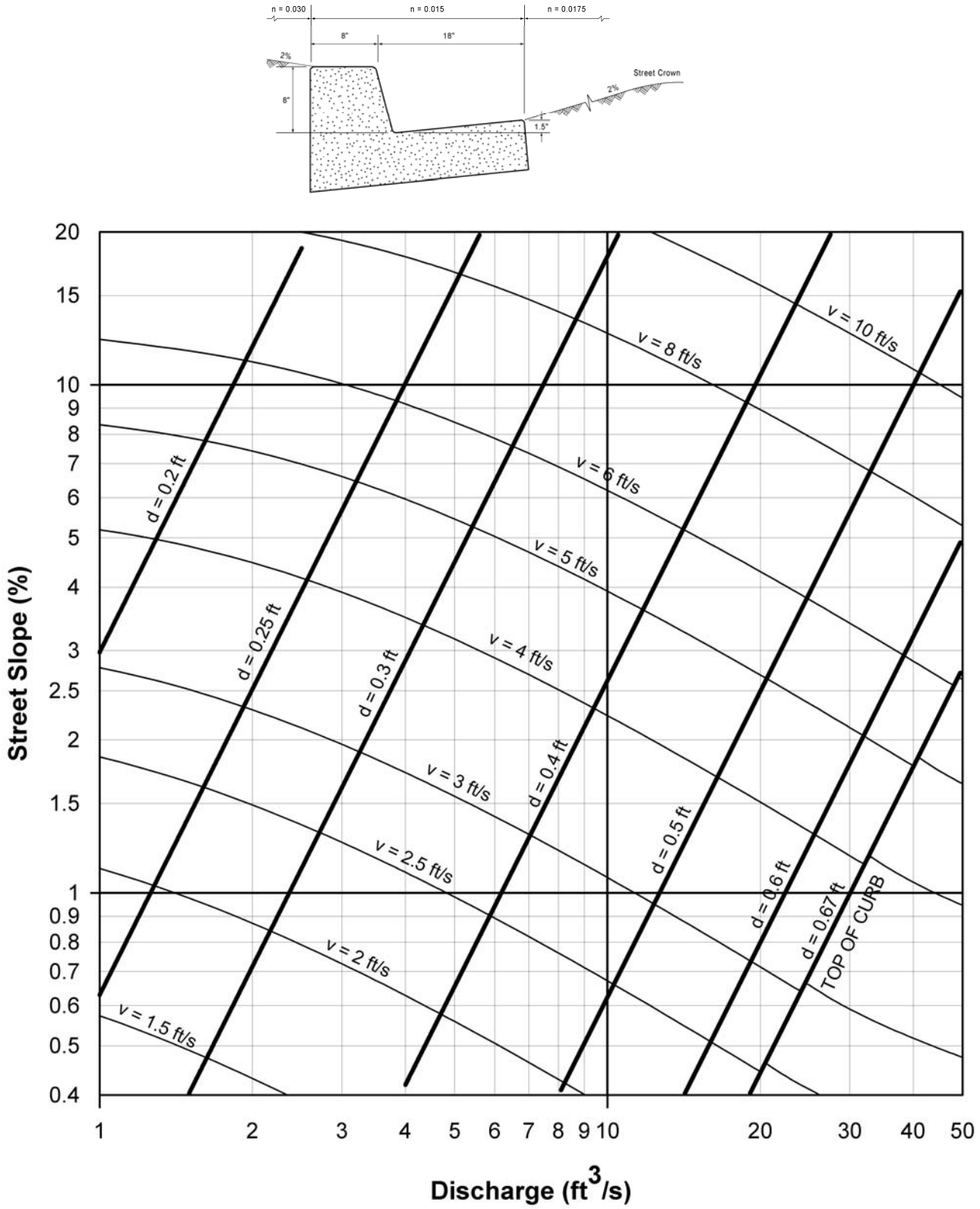

Figure 2-5 8-inch Gutter and Roadway Discharge-Velocity Chart

Figure 2-6

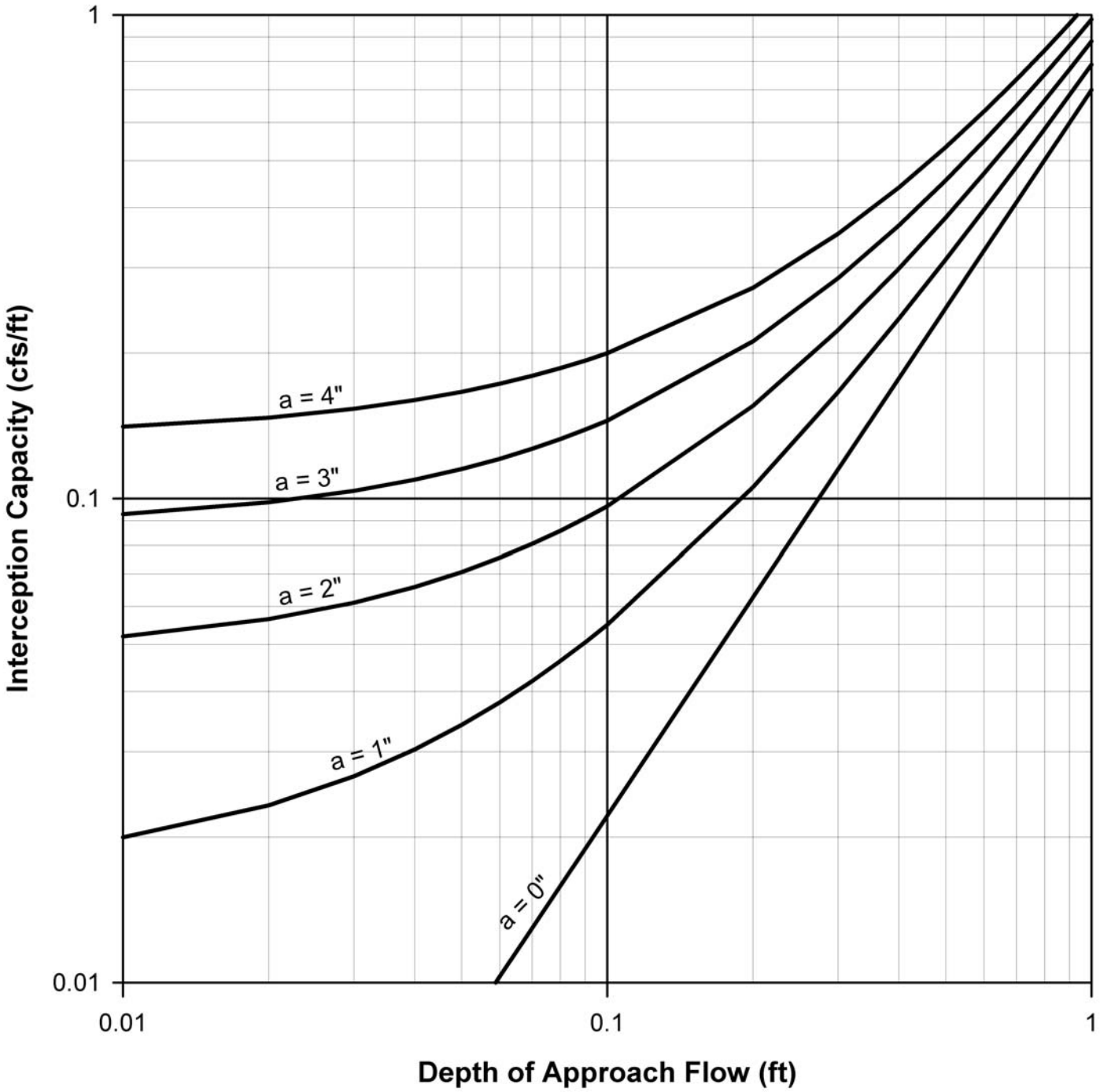

Figure 2-6 Interception Capacity of Curb Opening Inlet on Continuous Grade

Figure 2-7

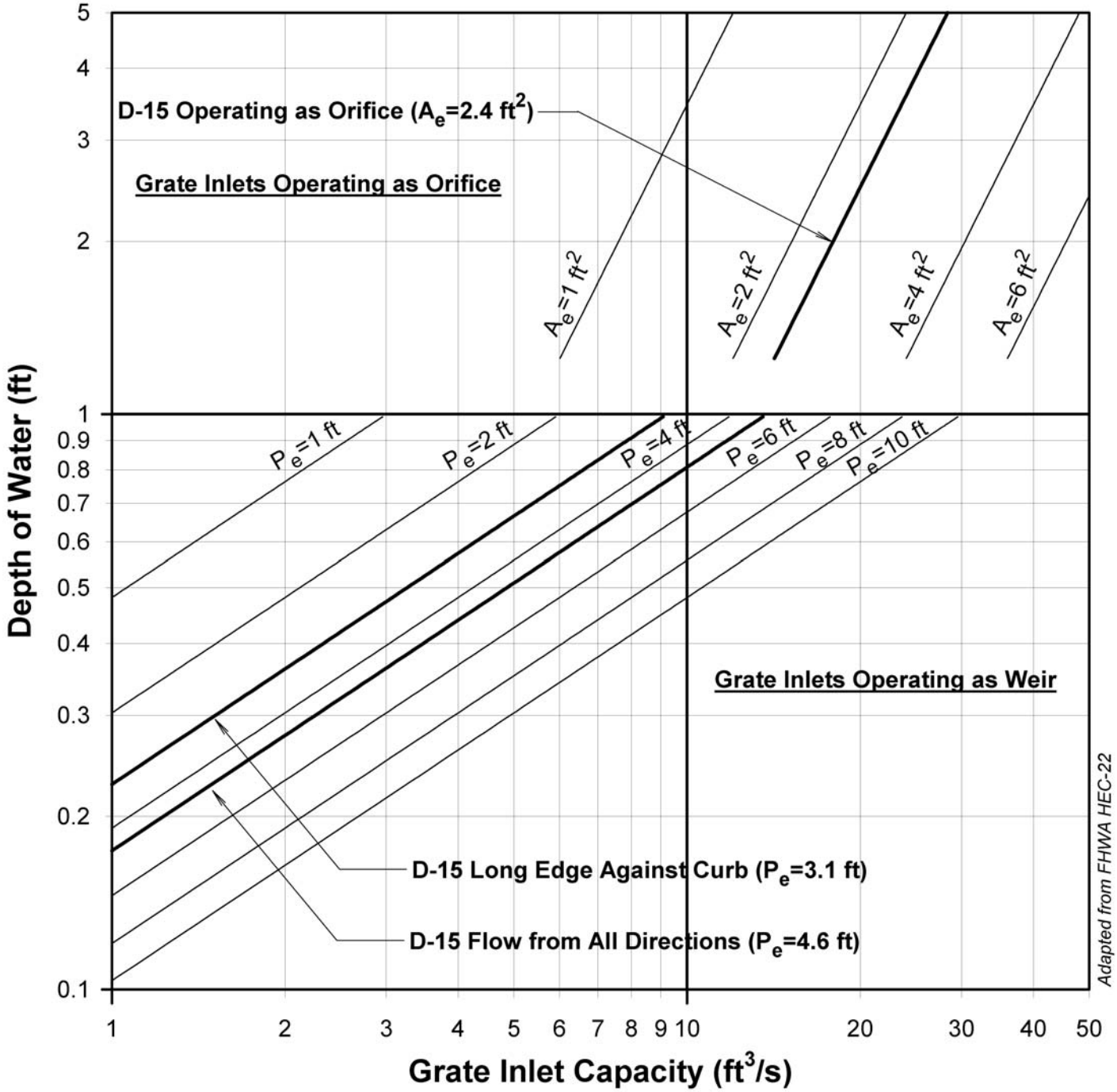

Figure 2-7 Capacity of Grate Inlets in Sump Locations

Figure 2-8

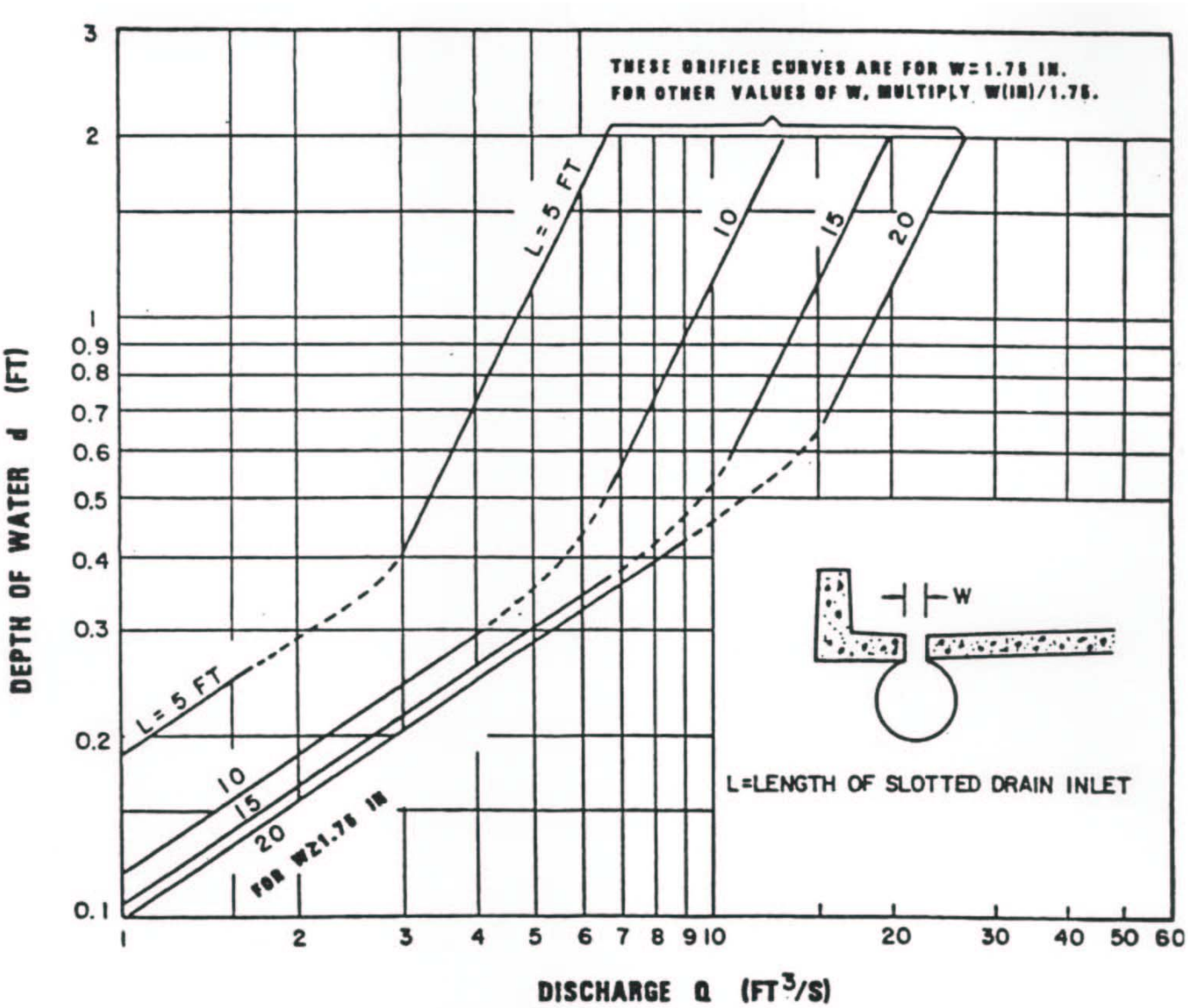

Slotted drain inlet capacity in sump locations.

Figure 2-8 Slotted Drain Inlet Capacity in Sump Locations

[THIS PAGE INTENTIONALLY LEFT BLANK]

3 STORM DRAINS

3.1 INTRODUCTION

Underground conduits operate in conjunction with surface drainage to maintain public safety and manage flooding during storm events. Storm drainage systems, which may include the combination of underground conduits and streets, must have the capacity to convey the peak discharge from a 100-year design event without affecting property located adjacent to the right-of-way. Street drainage systems shall meet the criteria regarding the maximum flow width, depth, and velocity as described in Chapter 2 of this Manual. To satisfy these criteria, it is often necessary to supplement surface drainage with underground conveyance. This chapter summarizes the general design criteria for underground drainage conduit in San Diego County, and describes the methods to apply when designing these systems.

3.2 DESIGN CRITERIA

3.2.1 Hydraulic Capacity

Storm drains conveying flow within the right-of-way of a public road, or across a public road (i.e., across the centerline of a roadway) shall have the capacity to convey the peak discharge from a 100-year design event. However, governing agencies may require that additional or alternate storm frequencies be evaluated based on individual project circumstances, such as; local requirements, private roads, sump locations, steep slopes, etc. The conduit shall convey the design flow with the hydraulic grade line (HGL) maintaining a minimum freeboard of 1.0 ft below the ground surface or gutter flow line during the design event.

At a minimum, storm drains within the public right-of-way shall not be less than 18 inches in diameter. The cross-sectional area of the pipe shall not decrease when proceeding down gradient within the storm drain system. Diversion of drainage is not allowed (i.e., all water entering a storm drain system must be discharged within the same drainage basin or watershed that it was collected in).

This Manual references its design criteria and procedures to storm drain conduit with a circular cross-section. These criteria and procedures can be adapted to other cross-section shapes (e.g., arches, other non-circular or non-rectangular shapes) with due care. It is important to note that cross-section shapes must be compared using their section factor ($AR^{2/3}$), and not simply on the basis of cross-sectional area and perimeter.

3.2.2 Manning Roughness Coefficient

Appendix A provides a table of recommended Manning Roughness Coefficients for underground conduits.

3.2.3 Alignment and Curvature

3.2.3.1 Horizontal Alignment

Storm drains shall adhere to a straight alignment or a circular curve of uniform radius within the same run of pipe (i.e., from one clean-out, inlet, or other drainage structure to another), or follow the alignment of overlying streets whenever reasonable. Where practical, storm drains shall run perpendicular to the slope contours in cases where the slope is 20 percent or steeper. Storm drains

shall not be placed within a slope parallel to slope contours in cases where the slope is 20 percent or steeper.

The horizontal alignment of a storm drain system shall maintain a minimum horizontal clearance from potable water mains and sanitary sewer lines. The distance between the outside diameter of a storm drain and the outside diameter of other wet utilities shall not be less than 5 feet without prior approval by the governing agency.

The material type, length of pipe segments, and bevel of joints limit the curvature of the storm drain. Appendix B presents additional information on pipe alignment based on pipe characteristics.

When designing the junction of two storm drain pipes, priority shall be given to the larger of the connecting storm drains. Flow from the lateral (i.e., the smaller storm drain pipe) shall not oppose the flow in the main line, without prior approval from the governing agency. Specifically, when the angle of confluence (φ) is measured from the centerline of the main line, the angle of confluence shall be less than or equal to 90 degrees at all times. Figure 3-1 illustrates the definition of angle of confluence used in this manual. The angle of confluence shall be further limited to 60 degrees in cases where:

1. The lateral is 36 inches in diameter or larger;
2. The lateral flow is greater than or equal to 10 percent of the main-line flow;

3.2.3.2 Vertical Alignment

The vertical alignment of a storm drain systems shall: (1) maintain a depth of cover to sufficient to avoid damage to the facility from overhead traffic loads; (2) minimize conflicts with other underground utilities; and (3) minimize potential buoyancy problems (in cases where a groundwater table is present).

The minimum grade of storm drain pipe shall be 0.5 percent. The governing agency may approve flatter grades where no other practical solution is available.

Storm drain conduit shall be protected from surface disturbances and displacements with soil or other cover. The minimum soil cover above a storm drain facility depends on storm drain material type and strength, size of the conduit, cover material, bedding conditions, and traffic loading. For practical purposes, the range of these conditions cannot be delineated fully in this Manual. The designer shall determine the required cover based on project conditions, maintaining a minimum soil cover of 2 feet, or 1 foot below a pavement subgrade, whichever is greater.

The maximum soil cover above a storm drain facility depends on storm drain material type and strength, size of the conduit, cover material, bedding conditions, and traffic loading. Appendix B provides maximum soil loading for reinforced concrete pipe; the designer may specify alternate materials with prior agency approval and demonstration that the material is adequate for the design load. The designer shall confirm that the design strength of the conduit will be adequate for the soil loading conditions. When there is more than 15 feet of soil cover, special design conditions may apply (see “Deep-Cover Culverts” Section 3.2.6 and “Minimum Easement Widths,” Section 3.2.5).

Best design practice for the vertical alignment within cleanouts, junction structures, or equivalent drainage structures is to provide a minimum of 0.1 foot of fall across the structure. When increasing the pipe diameter in the downgrade direction, the standard practice is to match the crowns (soffits) of the incoming and outgoing storm drain pipes when possible. The designer may vary from this practice in consultation with the governing agency.

3.2.4 Cleanouts

Cleanouts are structures that allow access for maintenance for a storm drain facility. The designer shall specify cleanouts at prescribed locations within a storm drain facility, and at specific locations in relation to the horizontal and vertical curvature of a pipe alignment.

Inlet structures may be used as clean-outs for pipes less than or equal to 36 inches in diameter. Pipes larger than 36 inches in diameter require separate clean-out structures or inlets structures specially modified to provide for maintenance of the facilities. When an inlet structure is used as a clean-out structure, particular attention should be paid to the hydraulic grade line to maintain 1.0 foot of freeboard below the inlet flow line.

3.2.4.1 Cleanouts: General Location

Cleanouts shall be located at prescribed locations within a storm drain alignment to provide a maintainable drainage system:

1. at the point where a storm drain facility transfers from private to public maintenance, or enters or exits a public right-of-way;
2. at points where the storm drain pipe size changes; and
3. at regular intervals along the storm drain alignment as prescribed in Table 3-1.

Table 3-1 Maximum Cleanout Spacing

Pipe D	Maximum Cleanout Spacing
< 30"	300 ft
< 42"	400 ft
< 60"	600 ft
≥ 60"	800 ft

3.2.4.2 Cleanouts: Horizontal Curves and Angle Points

Cleanouts shall be located within road alignments with horizontal curves as follows:

1. within 50 feet of the end of all horizontal curves;
2. at the point of compound curvature (PCC) and point of reverse curvature (PRC) of all curves; and
3. all horizontal angle points, except as described in (4), below.
4. A single horizontal angle point of 11.25 degrees or less is required(unless thrust calculations are included) without a cleanout in cases where:
    a. the angle point does not connect a horizontal and vertical curve; and
    b. the angle point is located within 50 feet of another cleanout or outfall.

3.2.4.3 Cleanouts: Circular Curves in a Vertical Plane or at Angle Points

Cleanouts shall be located within road alignments with circular curves within the vertical plane as follows:

1. the end of a circular curve within the vertical plane as it intersects a pipe with flatter grade, unless that intersection is within 50 feet of another structure;

2. all vertical angle points, *except* as noted in (3), below; and
3. a single vertical angle point of 10 degrees or less is allowed without a cleanout in cases where:
   a. the angle point does not connect a horizontal and vertical curve; and
   b. the angle point is located within 10 feet of another cleanout or outfall.

Manufactured, water-tight deflection points may be used to obtain up to 30 degrees of vertical deflection within 10 feet of a storm drain outfall. When the storm drain is less than 48 inches in diameter and the outfall is extended downgrade during future construction, this deflection point shall be replaced with a clean-out structure.

3.2.4.4 Concrete Lugs

Concrete lugs are connections between two storm drains that do not provide maintenance access directly above from the surface. Concrete lugs are allowed when:

1. minimum cleanout spacing requirements have been satisfied; and
2. there is a cleanout within 50 feet; and
3. the connecting pipe or lateral is smaller than the main line pipe as outlined in Table 3-2.

Table 3-2 Allowable Pipe Sizes for Lug

Main Line Pipe Diameter	Lateral Pipe Diameter
24"	18" Maximum
30"	21" Maximum
36"	24" Maximum
42"	30" Maximum
48"	30" Maximum
54" Minimum	36" Maximum

3.2.5 Required Maintenance Easement Widths

Table 3-3 lists the minimum easement width required for underground storm drainage facilities. These minimum easement widths assume conventional storm drain installation with a cover of 15 feet. Storm drains with cover between 15 feet and 25 feet will require an additional 2 feet of easement width for every foot of cover over 15 feet. Storm drains with cover deeper than 25 feet or other special conditions may warrant additional easement width, and require agency consultation and approval.

Table 3-3 Minimum Easement Widths

Pipe Diameter or Equivalent	Minimum Easement Width
< 36"	10 ft
≤ 60"	15 ft
≤ 84"	20 ft
≤ 108"	25 ft
> 108"	30 ft

Storm drains and easements shall be placed on one side of lot ownership lines in new development. In existing developments, storm drains easements shall follow lot ownership lines to the maximum extent practicable.

It is preferred that storm drain easements be established exclusively for storm drainage facilities. Joint use easements with other wet utilities (i.e., potable water and sanitary sewer) will be permitted when circumstances warrant, so long as the facilities within the joint-use easement maintain the minimum separation between wet utilities as outlined in Section 3.2.3.

All storm drain easements shall have physical access from the public right-of-way. In cases where such access requires a road (e.g., a steep slope or grade differential), the access easement shall be a minimum of 15 feet wide. The access road shall be a minimum of 12 feet wide, with a 15 percent maximum grade.

Permanent structural improvements shall not be constructed over storm drain easements. Facilities such as parking lots, recreation fields and trails, maintenance access roads, and fencing may be approved at the discretion of the governing agency.

3.2.6 Deep-Cover Conduits and Culverts

When pipe is under cover of 25 feet or more, the storm drain shall be over-sized by 6 inches in order to provide for future interior repairs or re-lining.

3.2.7 Water-Tight Joints

Water-tight joints storm drain system shall be specified in prescribed locations and situations:

1. Where the Hydraulic Grade Line (HGL) will exceed the inside crown (soffit) of the pipe by more than 5 feet for more than 40 feet of pipe length for the design storm.
2. Where pipe grade exceeds 20 percent.
3. Where the pre-project geologic investigation (i.e., soils report) indicates that groundwater levels might exceed the pipe invert elevation.

3.2.8 Buoyancy

Buoyancy calculations will be provided under the following conditions:

1. Where the soils report indicates that the maximum groundwater elevation is above the bottom of the drainage structure.
2. Where the drainage structures are adjacent to the ocean, estuary, levee, or other water body that will cause the maximum groundwater elevation to rise above the bottom of the drainage structure.
3. Where the drainage structures are adjacent to a stormwater basin or other facility where infiltration of water in the area of the proposed drainage structure is anticipated.
4. Other conditions, that in the judgment of the District Engineer may cause groundwater elevations to rise above the bottom of the drainage structure.

The buoyancy calculations shall be prepared in accordance with the methodology outlined in American Concrete Pipe Association's Design Data 22 (October 2007).

3.2.9 Pipe Abrasion

In cases where a storm drain pipe is expected to carry a large amount of debris or abrasive sediment material, or high velocity (20 feet per second [fps] and greater), it shall have measures

to provide sufficient design life for the facility. The pipe material will dictate the type and degree of protection required. When protection is warranted, the invert of the pipe (i.e., the bottom 90 degrees of the pipe) shall be protected on all straight-aways, and the invert and walls (i.e., the lower 180 degrees of the pipe) shall be protected on all curves.

3.2.10 Allowable Materials

There is a wide variety of materials that may be used for construction of a drainage system, including: reinforced concrete pipe, cast-in-place concrete conduit, corrugated steel pipe, corrugated aluminum pipe, high-density polyethylene, and other materials. The specified material shall be approved by the governing agency, have a minimum design life of 60 years, and shall meet the design criteria outlined in Appendix B.

The selection of pipe material shall consider factors such as strength of the conduit under maximum or minimum cover, high velocity (20 fps and greater), bedding and backfill conditions, anticipated loading, length of sections, ease of installation, corrosive action of surrounding soils, expected deflection, and cost of maintenance. Where field conditions indicate the use of one pipe material in preference to others (for instance, corrosive soil conditions, presence of a groundwater table, or a seawater outfall), the reasons shall be clearly presented in the plans and specifications.

3.2.11 Storm Drain Plans

Storm drain plans shall provide a minimum amount of information regarding storm drain design and construction, including:

- Plan and profile for all public storm drains greater than or equal to 18-inch diameter; and
- Stationing, which shall increase in the up-grade direction from the lower end of the storm drain pipe; and
- Hydraulic Grade Line (HGL) of the flow within the pipe, including hydraulic jumps; and
- Design flow and velocity (100-year, and additional as required); and
- Pipe design load rating or equivalent information (depending on pipe material, this might include pipe gauge or wall thickness); and
- Flow and velocity at the outfall of the pipe.

3.3 HYDRAULIC DESIGN OF STORM DRAINS

This section presents general procedures for hydraulic design and evaluation of storm drains. The designer is assumed to possess a basic working knowledge of storm drain hydraulics and is encouraged to review textbooks and other technical literature available on the subject.

3.3.1 Basic Design Procedure

Storm drain capacity analysis shall account for changes in flow conditions (open channel versus pressure flow) in the hydraulic grade line (HGL) calculations. Figure 3-2 provides a definition sketch for storm drain hydraulic computations.

The procedure for storm drain design proceeds as follows:

Step 1. Size storm drain system on a preliminary basis assuming uniform, steady flow conditions for the peak design discharge.

Step 2. Check the initial pipe sizes using the energy equation, accounting for all head losses.

Step 3. Adjust the pipe size and vertical alignment as necessary to provide minimum HGL freeboard (Figure 3-2).

3.3.2 Storm Drain Analysis – Uniform Flow

When a storm drain is not flowing full, the storm drain operates as an open channel and the hydraulic properties can be calculated using open channel techniques. The flow in a conduit operating as an open channel can be evaluated numerically using the Uniform Flow Equation:

$$Q = \frac{1.49}{n} A R^{2/3} S_f^{1/2} \qquad (3\text{-}1)$$

where …

Q = flow rate (ft^3/s);
n = Manning roughness coefficient (no dimension);
A = flow area (ft^2);
R = hydraulic radius (ft); and
S_f = friction slope, typically assumed to be equivalent to longitudinal slope of storm drain (S_o) (ft/ft)

During full-flow conditions, the **flow area** and **hydraulic radius** for a circular pipe of diameter (D) can be simplified to the following relationships:

$$A = A_{full} = \frac{\pi D^2}{4} \qquad (3\text{-}2)$$

$$R = R_{full} = \frac{D}{4} \qquad (3\text{-}3)$$

Therefore, the minimum required diameter for a **circular pipe** (D_r) needed to convey a particular design flow (Q) can be calculated as:

$$D_r = \left(\frac{2.16nQ}{\sqrt{S_o}} \right)^{3/8} \qquad (3\text{-}4)$$

The pipe diameter is specified as the next standard pipe size larger than the minimum required (D_r). An analogous procedure can be followed for alternative conduit shapes. Figure 3-6 (page 3-26) illustrates the hydraulic properties for circular pipes, assuming that the friction coefficient (Manning roughness coefficient) does <u>not</u> vary with depth.

3.3.3 Storm Drain Analysis -- Pressure Flow

When a storm drain is flowing under a pressure flow condition, the friction slope (S_f) and longitudinal slope of the storm drain (S_o) may not be equivalent. Therefore, the energy and hydraulic grade lines cannot be calculated using the Uniform Flow Equation. The capacity calculations generally proceed upstream from the storm drain outlet, accounting for all energy losses through each pipe run and drainage structure. These losses are added to the EGL and accumulate to the upstream end of the storm drain. The HGL is then determined by subtracting the velocity head, (H_v) from the EGL at each change in the EGL slope.

3.3.4 Storm Drain Analysis -- HGL Calculations

The designer shall check the available energy at all junctions and transitions to determine whether the flow in the storm drain will be pressurized due to backwater effects, even when the design flow is less than the full flow capacity of the storm drain.

To calculate the Energy Grade Line (EGL) for a storm drain system, divide the system into "runs" of pipe between structures (clean-outs, inlets, junctions, or other structures) or changes in grade. The slope of the pipe shall be constant within each run. Starting with the downstream control elevation (EGL_i) for the most downstream run of pipe, first calculate the friction losses and bend losses through the pipe and then the losses across the upstream drainage structure. The EGL at the upstream end of the run (EGL_{i+1}) will be the sum of the downstream control elevation, friction losses, and structure losses, and will be the downstream control elevation for the next run of pipe:

$$EGL_{i+1} = EGL_i + \left(\Sigma H_L\right)_{PIPE} + \left(\Sigma H_L\right)_{STRUCTURES} \qquad (3\text{-}5)$$

Figure 3-2illustrates the components used in the energy grade line and head loss calculations. The hydraulic grade line (HGL) is then calculated by subtracting the velocity head ($v^2/2g$) from the energy grade line:

$$HGL_i = EGL_i - \frac{v_i^2}{2g} \qquad (3\text{-}6)$$

EGL elevations must always decrease in the downstream direction, and must always increase in the upstream direction. On the other hand, HGL elevations may increase or decrease at structure locations regardless of the direction considered. For instance, the HGL will increase in the downstream direction within a pipe when there is a hydraulic jump.

3.3.5 Downstream Control (Tailwater) Elevation

The hydraulic analysis of a storm drain system typically begins at the downstream outfall. The controlling water surface elevation at the point of discharge is commonly referred to as the tailwater. At the outfall, one of several conditions will be encountered: another closed conduit; outfall to a drainage or natural channel, storage facility, reservoir, lake, or detention facility; a free outfall; or a tidally influenced outfall. The tailwater elevation criteria described here are for the purpose of determining HGL and EGL elevations only; Chapter 7, "Energy Dissipation" describes tailwater elevation criteria for energy dissipation calculations.

For free outfalls, the initial water surface elevation (tailwater) shall be assumed to be equivalent to the soffit elevation. For outfalls into other drainage facilities, a drainage channel, reservoir, or detention facility, the initial water surface elevation shall be set at the 100-year water surface elevation calculated for the channel or described on the appropriate Flood Insurance Rate Map (FIRM) or County floodplain map at the location of the outfall. In cases where the storm drain outfall condition is tidally influenced, it is usually sufficient to use the historic high tide elevation as the tailwater elevation. In cases where storm surge is a concern or for other situations with unusual tailwater conditions, the appropriate design outfall tailwater elevation shall be chosen in consultation with the governing agency.

If the outfall channel is a river or stream, it may be necessary to consider the joint or coincidental probability of the two hydrologic events occurring at the same time to adequately determine the elevation of the tailwater in the receiving stream. The relative independence of the discharge

from the tributary system can be qualitatively evaluated by a comparison of the drainage area of the main stem to the area of the tributary. For example, if the tributary system has a drainage area much smaller than that of the main stem, the peak discharge from the tributary may be out of phase with the peak discharge from the main stem. Table 3-4_provides a comparison of discharge frequencies for coincidental occurrence for a 100 year design storm. This table can be used to establish an appropriate tailwater WSEL for the tributary based on the expected coincident storm frequency in the main stem. For example, if the main stem has a drainage area of 1000 acres and the tributary has a drainage area of 10 acres the ratio of main stem drainage area to tributary drainage area is 2000 to 20 which equals 100 to 1. From Table 3-4 for the 100 year design storm occurring over both areas, the flow rate in the main stem will equal that of a 25 year storm when the tributary flow rate reaches its 100 year peak. Conversely, when the flow rate in the main stem reaches its 100 year peak at the outfall of the tributary, the flow rate from the tributary will have fallen to the 25 year flow rate.

Table 3-4 Coincidental Frequency Table

Area Ratio	100 Year Coincidental Frequency	
	Main Stem	Tributary
10,000 to 1 and Greater	2 100	100 2
Between 9,999 to 1 and 1,000 to 1	10 100	100 10
Between 999 to 1 and 100 to 1	25 100	100 25
Between 99.9 to 1 and 10 to 1	50 100	100 50
Between 9.99 to 1 and 1 to 1	100 100	100 100

Coincidental Channel Hydraulic Calculations

The engineer may use the 100 year WSEL in the main stem as the tailwater elevation for all mainline hydraulic calculations in the tributary regardless of the relative sizes of the drainage areas.

Where the engineer, for the purpose of analyzing the mainline hydraulics in the tributary, proposes to use two different frequencies, one for main stem and a different frequency for the tributary drainage system, two design water surfaces must be calculated:

1. The water surface in the main stem will be the WSEL of the larger frequency as shown in Table 3-4 (100). The tributary would then use the lower frequency shown in Table 3-4 (5,10 etc.) for its mainline hydraulic calculations. For example, for a drainage area ratio between 100 to 1 and 999 to1 and a 100 year storm the main stem control WSEL would be calculated using a 100 year storm and the mainline hydraulics in the tributary would be calculated using a 25 year storm.
2. In the second case, the water surface in the main stem will be the WSEL of the smaller frequency as shown in Table 3-4 (2, 10 etc.). The tributary would then use the larger

frequency shown in Table 3-4 (100) for its mainline hydraulic calculations. For example, for a drainage area ratio between 100 to 1 and 999 to 1 and 100 year storm the main stem control WSEL would be calculated using a 25 year storm and the mainline hydraulics in the proposed drainage facility would be calculated using a 100 year storm.

The two resulting hydraulic grade lines for the proposed facility would be compared and the more prohibitive one would be used for design.

Where the NRCS method is used, for both main stem and tributary, to establish the design flow rates, the main stem tailwater WSELs shall be calculated using the peak flow in the main stem calculated using the main stem depth area reduction factor. The mainline hydraulic calculations in the tributary shall be calculated using the peak flow in the tributary calculated using the tributary area depth reduction factors.

Control WSEL Elevations

Where there is a mapped floodplain or floodway shown on the applicable FIRM or County floodplain map for the watercourse, the 100 year tailwater WSEL elevation shall be the floodway elevation or, if there is no floodway, the base flood elevation shown on the FIRM or County floodplain map plus 1.00 foot. The increase in control WSEL depth is to allow for the future increase in flood elevations due to encroachment into the floodplain.

3.3.6 Energy Loss Calculations

This Manual presents a standard energy-loss method for use in the hydraulic analysis of storm drain systems, in which head loss is calculated as a proportion of velocity head ($v^2/2g$). The standard energy-loss method is appropriate for storm drain analysis in most typical cases. Though not discussed in detail in this Manual, energy loss calculation methods based on pressure-momentum theory are also acceptable, and may be more appropriate in some cases (e.g., systems with steep gradients).

Numerous computer programs are available for computing energy loss and hydraulic grade lines, including a variety of proprietary computer software packages. The design engineer should be aware of the energy loss method used by a particular computer program, and recognize the limitations of any software and/or energy loss method applied. The County accepts analyses using software from the appropriate FEMA approved list.

Minor pipe losses and structure losses need not be calculated in situations where minor losses will not significantly affect the performance of the drainage system. The design engineer's best judgment will determine whether to calculate minor losses in cases where the HGL is significantly below freeboard requirements, cases with low pipe velocities, or in cases where backwater does not affect other properties.

3.3.6.1 Pipe Losses – Friction

Friction Losses – Open Channel

For open channel conditions under sub-critical flow, the friction slope of a pipe (S_f) and the longitudinal slope of the storm drain (S_o) may be assumed equivalent. As a result, the energy grade line and hydraulic grade line may be parallel as the flow approaches normal depth:

$$H_f = S_f L \approx S_o L \qquad (3\text{-}7)$$

where …

H_f = head loss due to pipe friction (ft);
S_o = longitudinal pipe slope (not the S_f) of pipe (ft/ft);
S_f = friction slope (not the S_o) of pipe (ft/ft); and
L = length of pipe (ft).

Friction Losses – Pressure Flow

When the downstream control elevation is higher than the downstream crown elevation, the storm drain pipe is surcharged. When a storm drain is flowing under such a pressure flow condition, the friction slope (S_f) and longitudinal slope of the storm drain (S_o) may not be equivalent. In this case, friction loss (H_f) is computed using the expression:

$$H_f = S_f L \tag{3-8}$$

where …

H_f = head loss due to pipe friction (ft);
S_f = friction slope (not the S_o) of pipe (ft/ft); and
L = length of pipe (ft).

The friction slope for a pipe under full-flow conditions can be derived from Manning's equation as follows:

$$S_f = \left(\frac{Qn}{0.46D^{8/3}} \right)^2 \tag{3-9}$$

where …

S_f = friction slope (ft/ft);
Q = discharge (ft^3/s);
n = Manning roughness coefficient; and
D = pipe diameter (ft).

3.3.6.2 Pipe Losses - Bend Losses

The bend loss coefficient (K_b) is primarily a function of the angle of curvature (Δ). The head losses for bends, in excess of that caused by an equivalent length of straight pipe, is expressed as:

$$H_L = K_b \frac{v_2^2}{2g} \tag{3-10}$$

$$K_b = 0.0033\Delta \tag{3-11}$$

where …

Δ = angle of curvature (degrees).

Equation 3-11 is most appropriate for bends with radii between eight and twenty times the diameter of storm drain ($8D<R<20D$). For tighter radius bends ($R<8D$), the design engineer shall multiply the value of K_b determined in Equation 3-11 by the quantity $1+D/R$. Bend losses do not need to be calculated when the radius of curvature is more than 20 times the diameter of the storm drain ($R>20D$). Head loss due to pipe bends shall be applied at the exit of the bend (point of

curvature). For abrupt angular changes in alignment, use the structure loss defined in Section 3.3.6.5.

3.3.6.3 Structure Losses – Lugged Connections

Structural head losses occur where a lateral pipe is connected to a larger main line of storm drain system without the use of a clean-out structure (i.e., lugged connections) (Figure 3-3). These head losses depend on the relative magnitude and velocity (momentum) of the incoming and outgoing flow, the angle of confluence, and the relative size of the incoming and outgoing pipes.

Lugged Connections – Simplified Method

Because the calculation of junction losses can be quite complex, a simplified head loss may be used for the design of storm drain systems with low velocity head and minimal hydraulic constraints (i.e., systems with ample HGL freeboard). This method is also useful for developing preliminary design estimate for head loss in more complex drainage systems.

$$H_L = \frac{v_{out}^2}{2g} - K_j \frac{v_{in}^2}{2g} \qquad (3\text{-}12)$$

where …

H_L = head loss at junction (ft);
v_{in}, v_{out} = incoming and outgoing flow velocity, respectively (ft/s);
K_j = junction loss coefficient, as given in Table 3-5;
g = gravitational acceleration (32.2 ft/s^2)

Junction head losses are applied at the exit of the junction. Table 3-5 provides a list of simplified junction head loss coefficients.

Table 3-5 Simplified Lugged Connection Head Loss Coefficients

Angle of Confluence, φ (degrees)	Junction Head Loss Coefficient, K_j
90	0.25
60	0.35
45	0.50
30	0.65
15	0.85

Lugged Connections – Energy-Momentum Method

For the design and evaluation of storm drain systems with high velocity head or having significant hydraulic constraints, it is appropriate to account more accurately for the relative magnitude, direction, and velocity of flows through the junction as well as the size of the inflow and outflow pipes. In this case, head loss at a lugged connection is calculated as:

$$H_L = \frac{Q_{out} v_{out} - Q_{in} v_{in} - Q_L v_L \cos\varphi}{0.5g(A_{out} + A_{in})} + \frac{v_{in}^2}{2g} - \frac{v_{out}^2}{2g} \qquad (3\text{-}13)$$

where …

Q = flow from the inflow (*in*), outflow (*out*), and lateral pipes (*L*), (ft^3/s);

v = velocity of the inflow (*in*), outflow (*out*), and lateral pipes (*L*), (ft^3/s);
φ = angle of confluence;
A = cross-sectional area of the inflow (*in*) and outflow (*out*) pipes (ft^2); and
g = gravitational acceleration (32.2 ft/s^2)

3.3.6.4 Structure Losses – Transitions with No Clean-Out

Transition structures, where pipe diameters expand or contract outside the context of a clean-out structure, introduce head loss to a storm drain system. The head loss coefficient used in these situations is primarily a function of inflow and outflow pipe diameter, as well as the suddenness of the transition and whether the pipe is operating under open-channel or pressure-flow conditions. Figure 3-4 presents a definition sketch for transition structure cone angles (θ).

Expansion Losses – Open Channel Condition

Equation 3-14 describes expansion head loss under open flow conditions. The expansion loss coefficient (K_e) depends on the suddenness of the expansion and the relative size of the inflow and outflow pipes. Table 3-6 presents expansion loss coefficients for storm drains under open-channel conditions.

Table 3-6 Expansion Loss Coefficients Under Open Channel Conditions

	Expansion Loss Coefficient, K_e	
Cone Angle (θ)	**D_2/D_1=3**	**D_2/D_1=1.5**
10°	0.17	0.17
20°	0.40	0.40
45°	0.86	1.06
60°	1.02	1.21
90°	1.06	1.14
120°	1.04	1.07
180°	1.00	1.00

$$H_L = K_e\left(\frac{v_1^2 - v_2^2}{2g}\right) \qquad (3\text{-}14)$$

where …

K_e = expansion loss coefficient (Table 3-6);
v_1, v_2 = upstream and downstream flow velocity, respectively (ft/s);
g = gravitational acceleration (32.2 ft/s^2)

Contraction Losses – Open Channel Conditions

Equation 3-15 describes contraction head loss under open flow conditions. Note that the velocity head term in the open-channel contraction loss equation is the downstream velocity head less the upstream velocity head, which is the opposite of the expansion head loss equation. For gradual contractions, the contraction coefficient is assumed half the expansion loss coefficient ($0.5K_e$, see Table 3-6). Table 3-7 provides values for sudden contraction loss coefficients under open channel conditions.

$$H_L = K_c \left(\frac{v_2^2 - v_1^2}{2g} \right) \qquad (3\text{-}15)$$

where …

K_c = contraction loss coefficient ($0.5K_e$ or Table 3-7)
v_1, v_2 = upstream and downstream flow velocity, respectively (ft/s);
g = gravitational acceleration (32.2 ft/s^2)

Table 3-7 Contraction Loss Coefficients Under Open Channel Conditions

D_2/D_1	Contraction Loss Coefficient, K_c
approaching 0	0.5
0.4	0.4
0.6	0.3
0.8	0.1
1.0	0.0

Expansion Losses – Pressure Flow

Expansion of the flow area in a storm drain under submerged conditions will result in a shearing action between the incoming high velocity jet and the surrounding conduit boundary. As a result, eddy currents and turbulence dissipate much of the kinetic energy. The head loss is expressed as:

$$H_L = K_E \frac{v_1^2}{2g} \qquad (3\text{-}16)$$

where …

v_1 = upstream flow velocity (ft/s);
K_E = expansion loss coefficient, pressure flow (Table 3-8 and Table 3-9).

The value of the expansion loss coefficient (K_E) varies from approximately 1.0 for a sudden expansion to 0.2 for a well-designed expansion transition. Table 3-8 and Table 3-9 present loss coefficients for pressure flow conditions for sudden and gradual expansions, respectively.

Table 3-8 Expansion Loss Coefficient (K_E) for Sudden Enlargement Under Pressure Flow Conditions

	Velocity V_1 (ft/s)												
D_2/D_1	**2.00**	**3.00**	**4.00**	**5.00**	**6.00**	**7.00**	**8.00**	**10.00**	**12.00**	**15.00**	**20.00**	**30.00**	**40.00**
1.20	0.11	0.10	0.10	0.10	0.10	0.10	0.10	0.09	0.09	0.09	0.09	0.09	0.08
1.40	0.26	0.26	0.25	0.24	0.24	0.24	0.24	0.23	0.23	0.22	0.22	0.21	0.20
1.60	0.40	0.39	0.38	0.37	0.37	0.36	0.36	0.35	0.35	0.34	0.33	0.32	0.32
1.80	0.51	0.49	0.48	0.47	0.47	0.46	0.46	0.45	0.44	0.43	0.42	0.41	0.40
2.00	0.60	0.58	0.56	0.55	0.55	0.54	0.53	0.52	0.52	0.51	0.50	0.48	0.47
2.50	0.74	0.72	0.70	0.69	0.68	0.67	0.66	0.65	0.64	0.63	0.62	0.60	0.58
3.00	0.83	0.80	0.78	0.77	0.76	0.75	0.74	0.73	0.72	0.70	0.69	0.67	0.65
4.00	0.92	0.89	0.87	0.85	0.84	0.83	0.82	0.80	0.79	0.78	0.76	0.74	0.72
5.00	0.96	0.93	0.91	0.89	0.88	0.87	0.86	0.84	0.83	0.82	0.80	0.77	0.75
10.00	1.00	0.99	0.96	0.95	0.93	0.92	0.91	0.89	0.88	0.86	0.84	0.82	0.80
∞	1.00	1.00	0.98	0.96	0.95	0.94	0.93	0.91	0.90	0.88	0.86	0.83	0.81

D_2/D_1 = ratio of diameter of larger pipe to smaller pipe; V_1 = velocity in smaller pipe (upstream of transition).

Table 3-9 Expansion Loss Coefficient (K_E) for Gradual Enlargement Under Pressure Flow Conditions

	Angle of Cone										
D_2/D_1	**2º**	**6º**	**10º**	**15º**	**20º**	**25º**	**30º**	**35º**	**40º**	**50º**	**60º**
1.1	0.01	0.01	0.03	0.05	0.10	0.13	0.16	0.18	0.19	0.21	0.23
1.2	0.02	0.02	0.04	0.09	0.16	0.21	0.25	0.29	0.31	0.35	0.37
1.4	0.02	0.03	0.06	0.12	0.23	0.30	0.36	0.41	0.44	0.50	0.53
1.6	0.03	0.04	0.07	0.14	0.26	0.35	0.42	0.47	0.51	0.57	0.61
1.8	0.03	0.04	0.07	0.15	0.28	0.37	0.44	0.50	0.54	0.61	0.65
2.0	0.03	0.04	0.07	0.16	0.29	0.38	0.46	0.52	0.56	0.63	0.68
2.5	0.03	0.04	0.08	0.16	0.30	0.39	0.48	0.54	0.58	0.65	0.70
3.0	0.03	0.04	0.08	0.16	0.31	0.40	0.48	0.55	0.59	0.66	0.71
∞	0.03	0.05	0.08	0.16	0.31	0.40	0.49	0.46	0.60	0.67	0.72

D_2/D_1 = ratio of diameter of larger pipe to smaller pipe; Angle of cone is angle in degrees between the side of the tapering section.

Contraction Losses – Pressure Flow

For loss due to contraction of cross-sectional flow area in a storm drain under submerged condition is expressed in the form:

$$H_L = K_C \frac{v_2^2}{2g} \qquad (3\text{-}17)$$

where …

K_C = contraction loss coefficient (Table 3-10 and

v_2 = downstream flow velocity (fps).

Contraction loss coefficient (K_C) varies from approximately 0.4 for large pipe size differences (greater than 10:1) to approximately 0.1 for minor pipe size differences. Table 3-10 presents contraction loss coefficients for pressure flow conditions.

Table 3-10 Contraction Loss Coefficient (K_C) for Sudden Contraction Under Pressure Flow Conditions

	Velocity V_1 (ft/s)												
D_2/D_1	**2.0**	**3.0**	**4.0**	**5.0**	**6.0**	**7.0**	**8.0**	**10.0**	**12.0**	**15.0**	**20.0**	**30.0**	**40.0**
1.1	0.03	0.04	0.04	0.04	0.04	0.04	0.04	0.04	0.04	0.04	0.05	0.05	0.06
1.2	0.07	0.07	0.07	0.07	0.07	0.07	0.07	0.08	0.08	0.08	0.09	0.10	0.11
1.4	0.17	0.17	0.17	0.17	0.17	0.17	0.17	0.18	0.18	0.18	0.18	0.19	0.20
1.6	0.26	0.26	0.26	0.26	0.26	0.26	0.26	0.26	0.26	0.26	0.25	0.25	0.24
1.8	0.34	0.34	0.34	0.34	0.34	0.34	0.33	0.33	0.32	0.32	0.32	0.29	0.27
2.0	0.38	0.38	0.37	0.37	0.37	0.37	0.36	0.36	0.35	0.34	0.33	0.31	0.29
2.2	0.40	0.40	0.40	0.39	0.39	0.39	0.39	0.38	0.37	0.37	0.35	0.33	0.30
2.5	0.42	0.42	0.42	0.41	0.41	0.41	0.40	0.40	0.39	0.38	0.37	0.34	0.31
3.0	0.44	0.44	0.44	0.43	0.43	0.43	0.42	0.42	0.41	0.40	0.39	0.36	0.33
4.0	0.47	0.46	0.46	0.46	0.45	0.45	0.45	0.44	0.43	0.42	0.41	0.37	0.34
5.0	0.48	0.48	0.47	0.47	0.47	0.46	0.46	0.45	0.45	0.44	0.42	0.38	0.35
10.0	0.49	0.48	0.48	0.48	0.48	0.47	0.47	0.46	0.46	0.45	0.43	0.40	0.36
∞	0.49	0.49	0.48	0.48	0.48	0.47	0.47	0.47	0.46	0.45	0.44	0.41	0.38

D_2/D_1 = ratio of diameter of larger pipe to smaller pipe; V_1 = velocity in smaller pipe (downstream of transition).

3.3.6.5 Structures Losses – Inlets, Junctions, and Clean-Outs

Significant head losses can occur at a clean-out structure, whether or not one or more lateral storm drains confluence with the main line storm drain. Head losses in a clean-out are due to various reasons, including incoming and outgoing pipe size, angle of confluence, relative flow rates, and design details of the cleanout itself.

Inlets, Junctions, and Cleanouts - Simplified Method

Because of the difficulty in evaluating hydraulic losses at junctions due to the many complex conditions of pipe size, geometry of the junction and flow combinations, it can sometimes be impractical to perform detailed head loss calculations for drainage structures. This section presents a simplified method for calculating head loss calculations at drainage structures. This simplified method may be used for the design of storm drain systems with low velocity head and minimal hydraulic constraints (i.e., systems with ample HGL freeboard). This method is also useful for developing preliminary design estimate for head loss in more complex drainage systems.

The head loss for a particular structure can be estimated using Equation 3-18:

$$H_L = K\frac{v_o^2}{2g} \qquad (3\text{-}18)$$

where …

H_L = head loss at drainage structure (ft);
K = simplified structure head loss coefficient (ft);
v_o = outflow velocity (ft/s); and
g = gravitational acceleration (32.2 ft/s^2)

Table 3-11 presents values for the simplified head loss coefficient (K) across a drainage structure. This head loss can be used to estimate the drop between pipe crowns needed to offset energy losses at the structure, thus helping to avoid a submerged flow condition.

Table 3-11 Simplified Structure Head Loss Coefficient, K

Structure Configuration	Simplified Head Loss Coefficient, K
Inlet – Straight Run	0.50
Inlet – Angled Through	
90	1.50
60	1.25
45	1.10
22.5	0.70
Clean-Out – Straight Run	0.15
Clean-Out – Angled Through	
90	1.00
60	0.85
45	0.75
22.5	0.45

Inlets, Junctions, and Cleanout - Composite Method

For the design and evaluation of storm drain systems with high velocity head or having significant hydraulic constraints, it may be necessary to complete more detailed calculations to account for the various factors contributing to head loss. The head loss at clean-out or other drainage structures is expressed as an initial or basic loss ($K_o v^2/2g$) modified by several correction factors:

$$H_L = C_D C_Q C_P C_B \left(K_O \frac{v_2^2}{2g} \right) \qquad (3\text{-}19)$$

where …

H_L = structure head loss (ft);
C_D = relative flow depth correction factor;
C_Q = relative flow correction factor;
C_P = plunging flow correction factor;
C_B = benching correction factor;
K_O = initial or basic loss coefficient;
v_2 = outflow velocity (ft/s); and
g = gravitational acceleration (32.2 ft/s^2).

Table 3-12 below summarizes the head loss equations under conditions discussed above.

Table 3-12 Summary of Head Loss Equations

Head Loss	Condition	Equation
Expansion	Open Channel	$H_L = K_e\left(\frac{v_1^2 - v_2^2}{2g}\right)$
Contraction	Open Channel	$H_L = K_c\left(\frac{v_2^2 - v_1^2}{2g}\right)$
Expansion	Pressure Flow	$H_L = K_E\frac{v_1^2}{2g}$
Contraction	Pressure Flow	$H_L = K_C\frac{v_2^2}{2g}$
Simplified	Inlets, junctions, and cleanouts	$H_L = K\frac{v_o^2}{2g}$
Composite	Inlets, junctions, and cleanouts	$H_L = C_D C_Q C_P C_B\left(K_O\frac{v_2^2}{2g}\right)$

Basic Structure Loss Coefficient (K_o)

The initial or basic loss at a clean-out structure is defined as:

$$K_O = 0.1\left(\frac{b}{D_O}\right)\left(1-\sin\theta\right)+1.4\left(\frac{b}{D_O}\right)^{0.15}\sin\theta \qquad (3\text{-}20)$$

where …

K_O = initial or basic loss coefficient;
b = clean-out structure diameter or equivalent diameter (ft);
D_o = outflow pipe diameter (ft); and
θ = deflection angle.

This basic equation is valid only when the water level in the receiving inlet, junction, or cleanout is above the invert of the incoming pipe. In cases where this is not true, the structure losses are assumed to be zero. For non-circular drainage structures, the equivalent structure diameter is defined as the diameter of a circular structure having the equivalent area of the actual non-circular one. Table 3-13 and Figure 3-7 (page 3-27) present basic head loss for standard clean-outs in the San Diego region.

Table 3-13 Equivalent Diameters for San Diego Regional Standard Cleanouts

SD-RSD Standard Cleanout	Length (ft)	Width (ft)	Area (ft^2)	Equivalent Diameter (ft)
A-4	4	4	16	4.5
A-5	5	4	20	5.0
A-6	6	4	24	5.5
A-7	7	4	28	6.0
A-8	8	4	32	6.4

Relative Pipe Diameter and Flow Depth Correction Factor (C_D)

Equation 3-21 describes the correction factor that accounts for the relative pipe diameter and flow depth within a drainage structure. The relative flow depth correction factor depends on the depth of flow within the structure, which in this case is measured relative to the crown of the outlet pipe. When the flow depth in the structure above the crown of the outlet pipe (d_{out}-D_o) is much higher relative to the outlet pipe diameter (D_o) (i.e., there is submerged flow or a high-pressure condition), the correction factor is based on the relative diameters of the inflow and outflow pipes. In cases where the relative flow depth is lower, or not significantly larger than the diameter of the outlet pipe, the correction factor is a function of the flow depth relative depth to the outlet pipe diameter. For practical purposes, the correction factor for relative pipe diameter and flow depth need not be greater than C_D=3.0.

$$C_D = \begin{cases} 0.5\left(\dfrac{d_{out}}{D_o}\right)^{0.6} & (d_{out})/D_o < 3.2 \\ \left(\dfrac{D_o}{D_i}\right)^{3} & (d_{out})/D_o \geq 3.2 \end{cases} \qquad (3\text{-}21)$$

where …

C_D = relative flow depth correction factor;
d_{out} = depth of flow in clean out, measured as the difference between the HGL and the upstream invert of the outlet pipe (ft);
D_o = outflow pipe diameter (ft); and
D_i = inflow pipe diameter (ft).

Relative Flow Correction Factor (C_Q)

A correction factor can be applied when a lateral inflow to a cleanout where the incoming flow is greater than 10 percent of the main line flow. When the incoming lateral flow is less, this head loss equation is invalid and C_Q=1.0.

$$C_Q = \left(1 - 2\sin\theta\right)\left(1 - \frac{Q_i}{Q_o}\right)^{0.75} + 1 \qquad (3\text{-}22)$$

where …

C_Q = relative flow correction factor;
Q_i = inflow to structure (ft^3/s);
Q_o = outflow from structure (ft^3/s);
θ = deflection angle.

Plunging Flow Correction Factor (C_P)

When water falls into a structure, either from an inlet or from a lateral significantly above the invert of the structure, a plunging flow correction factor should be applied to the basic structure head loss.

$$C_P = 1 + 0.2\left(\frac{h_p}{D_o}\right)\left(\frac{h_p - d_{out}}{D_o}\right) \qquad (3\text{-}23)$$

where …

C_P = plunging flow correction factor;
h_p = plunge height above centerline of outflow pipe, measured as the difference in elevation between the highest incoming pipe invert and the centerline of the outlet pipe (ft);
d_{out} = depth of flow in clean out, measured as the difference between the HGL and upstream invert of the outlet pipe (ft); and
D_o = diameter of outlet pipe (ft).

Benching Correction Factor (C_B)

"Benching" the invert of a drainage structure can reduce head loss by directing flow through the structure. The benching correction factor depends on the type of benching that is specified, and whether flow in the structure is submerged. Figure 3-5 illustrates invert benching for a drainage structure. Table 3-14 presents benching correction factor for submerged and unsubmerged flow for various benching configurations; for intermediate conditions ($1.0<d_{out}/D_o<3.2$), the designer may interpolate linearly between the tabulated values.

Table 3-14 Benching Correction Factors (C_B)

Benching Type	Submerged Flow $d_{out}/D_o \geq 3.2$	Unsubmerged Flow $d_{out}/D_o \leq 1$
Flat or Depressed Floor	1.00	1.00
Half Bench	0.95	0.15
Full Bench	0.75	0.07

3.3.6.6 Entrance Losses

When runoff enters a storm drain system from open channels or other locations other than street inlets, an energy loss occurs at the entrance in the form of a contraction loss. The head loss at storm drain entrances is expressed as:

$$H_L = K_E \frac{v^2}{2g} \qquad (3\text{-}24)$$

The entrance loss coefficient (K_E) for storm drain systems is the same as the entrance loss coefficient used for the entrance loss calculation for culverts. Table 3-15 provides a list of recommended entrance loss coefficients.

Table 3-15 Entrance Loss Coefficients for Storm Drains and Culverts (Outlet Control, Full or Partly Full)

Type of Structure and Design of Entrance	Coefficient K_E
Concrete Pipe	
Projecting from Fill, Socket End (Groove-End)	0.2
Projecting from Fill, Square-Cut End	0.5
Headwall or Headwall and Wingwalls	
Socket End of Pipe (Groove-End)	0.2
Square-Edge	0.5
Rounded (Radius = D/12)	0.2
Mitered to Conform to Fill Slope	0.7
End-Section Conforming to Fill Slope *	0.5
Beveled Edges, 33.7º or 45º Bevels	0.2
Side- or Slope-Tapered Inlet	0.2
Corrugated Metal Pipe or Pipe-Arch	
Projecting from Fill (No Headwall)	0.9
Headwall or Headwall and Wingwalls Square-Edge	0.5
Mitered to Conform to Fill Slope, Paved or Unpaved Slope	0.7
End-Section Conforming to Fill Slope	0.5
Beveled Edges, 33.7º or 45º Bevels	0.2
Side- or Slope-Tapered Inlet	0.2
Box, Reinforced Concrete	
Headwall Parallel to Embankment (No Wingwalls)	
Square-Edged on 3 Edges	0.5
Rounded on 3 edges to Radius of D/12 or B/12, or Beveled Edges on 3 Sides	0.2
Wingwalls at 30º to 75º to Barrel	
Square-Edged at Crown	0.4
Crown Edge Rounded to Radius of D/12 or Beveled Top Edge	0.2
Wingwall at 10º to 25º to Barrel	
Square-Edged at Crown	0.5
Wingwalls Parallel (Extension of Sides)	
Square-Edged at Crown	0.7
Side- or Slope-Tapered Inlet	0.2

** Note: "End Sections conforming to fill slope," made of either metal or concrete, are the sections commonly available from manufacturers. From limited hydraulic tests they are equivalent in operation to a headwall in both inlet and outlet control. Some end sections, incorporating a closed taper in their design have a superior hydraulic performance. These latter sections can be designed using the information given for the beveled inlet.*

3.3.6.7 Outlet Losses

When the storm drain system discharges into open channels, additional losses occur at the outlet in the form of expansion losses. These losses are due to several causes. Even after accounting for expansion losses, in most storm drain outlets, the flow velocity in the storm drain is greater than the allowable or actual flow velocity in the downstream channel. Therefore, energy-dissipating facilities are used to remove excess energy from the storm drain flow (see Section 8). In addition, the alignment of the storm drain at the outlet may not be the same as the downstream channel. Therefore, energy is lost in changing the flow direction between the storm drain to the downstream channel. The head loss at storm drain outlets is expressed as:

$$H_L = K_{OUT} \frac{v_1^2}{2g} \qquad (3\text{-}24)$$

An outlet loss coefficient (K_{OUT}) of 1.0 shall be used for all storm drain outlets.

3.4 OUTLET PROTECTION

Storm drain outlets shall be constructed with erosion protection when they discharge to unlined channels or drainage courses. Chapter 7 of this Manual discusses the requirements for outlet protection.

3.5 REFERENCES

American Concrete Pipe Association. (October 2007). Design Data, Flotation of Circular Concrete Pipe.

American Public Works Association. (1981) "Urban Storm Water Management." Special Report No. 49.

American Society of Civil Engineers. (1992). *Design and Construction of Urban Stormwater Management Systems.* ASCE Manual of Practice No. 77/WEF Manual of Practice No. FD-20. New York.

City of Los Angeles, Bureau of Engineering, Storm Drain Design Division. (1968). *Hydraulic Analysis of Junctions.* Office Standard No. 115.

U.S. Department of Transportation, Federal Highway Administration. (August 2001). *Urban Drainage Design Manual, 2nd Edition.* Hydraulic Engineering Circular No. 22. FHWA-NHI-01-021.

U.S. Department of Transportation, Federal Highway Administration. (September 2001). Hydraulic Design Of Highway Culverts, Hydraulic Design Series No. 5, 2nd Edition. FHWA-NHI-01-020.

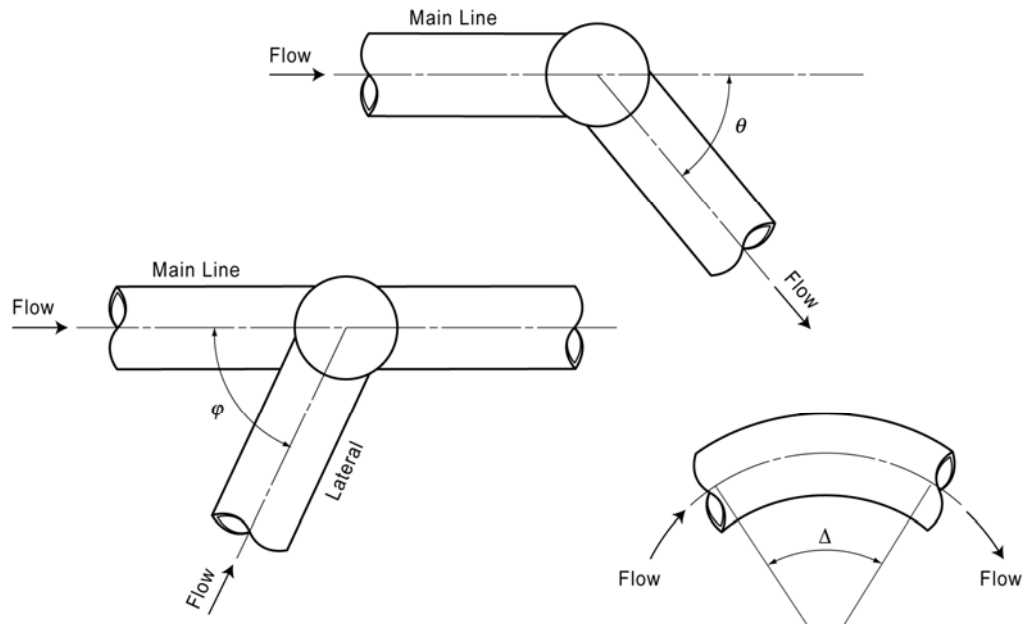

Figure 3-1 Definition Sketch for Angle of Deflection (θ), Angle of Confluence (φ), and Bend Radius (Δ)

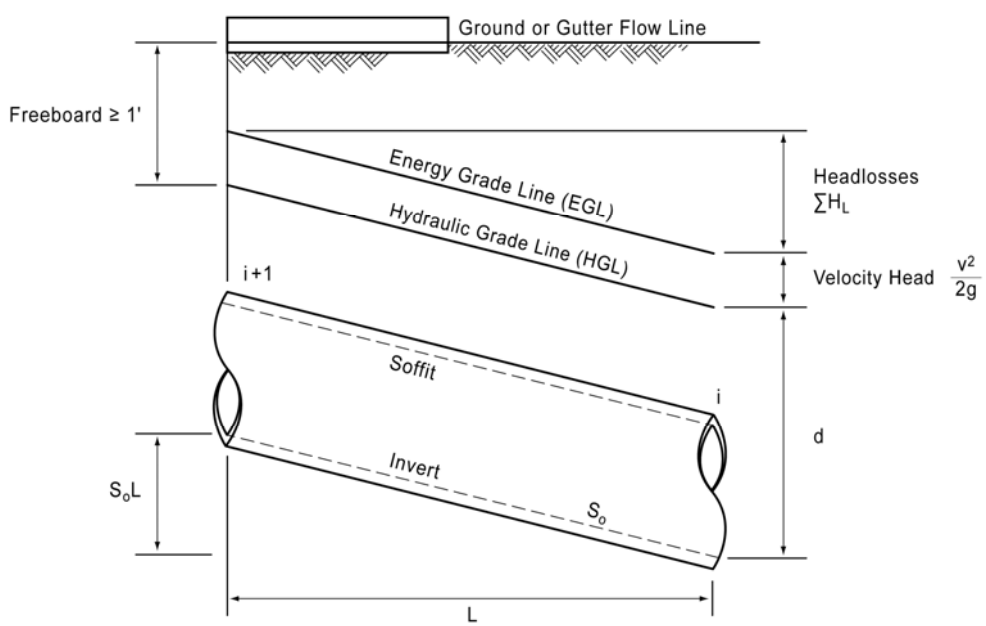

Figure 3-2 Definition Sketch for Storm Drain Hydraulic Calculations

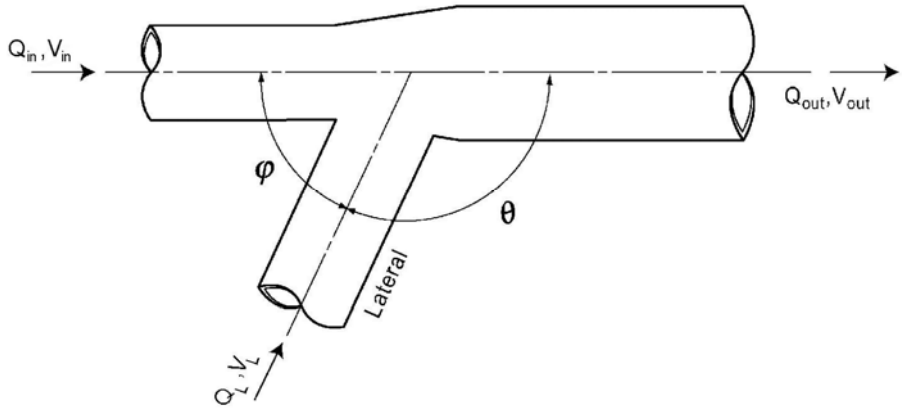

Figure 3-3 Definition Sketch for Lugged Connections

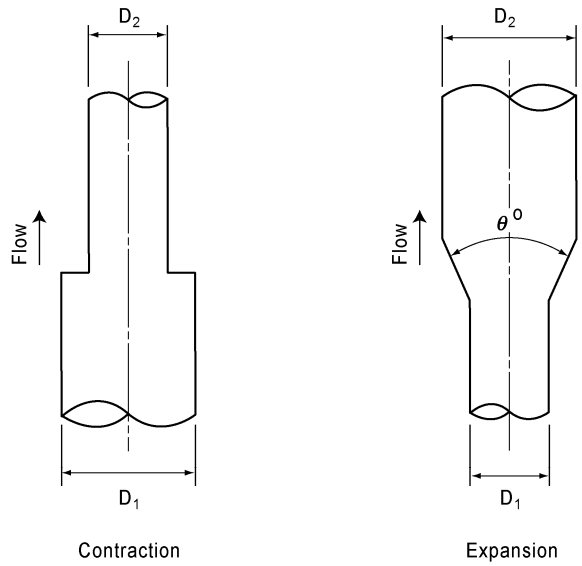

Figure 3-4 Definition Sketch for Transition Cone Angle

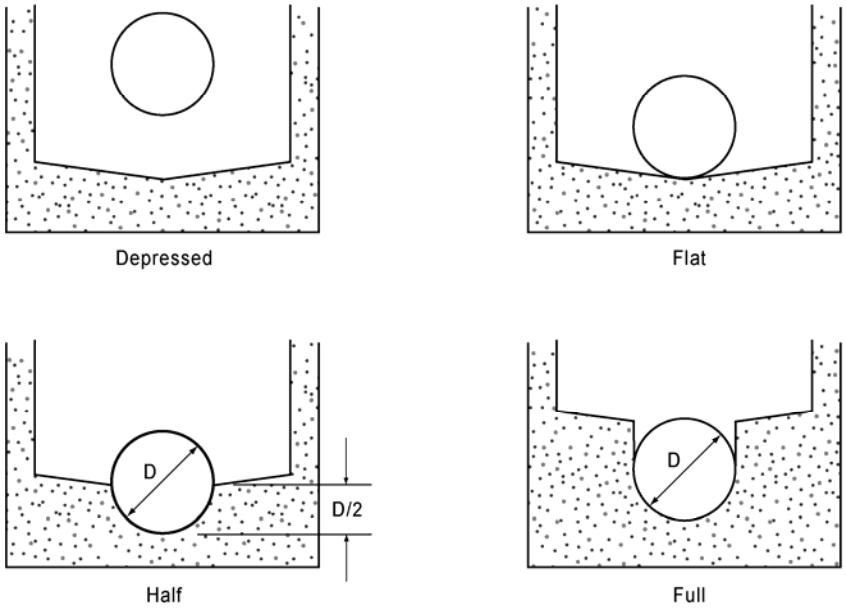

Figure 3-5 Invert Benching Configurations

Figure 3-6

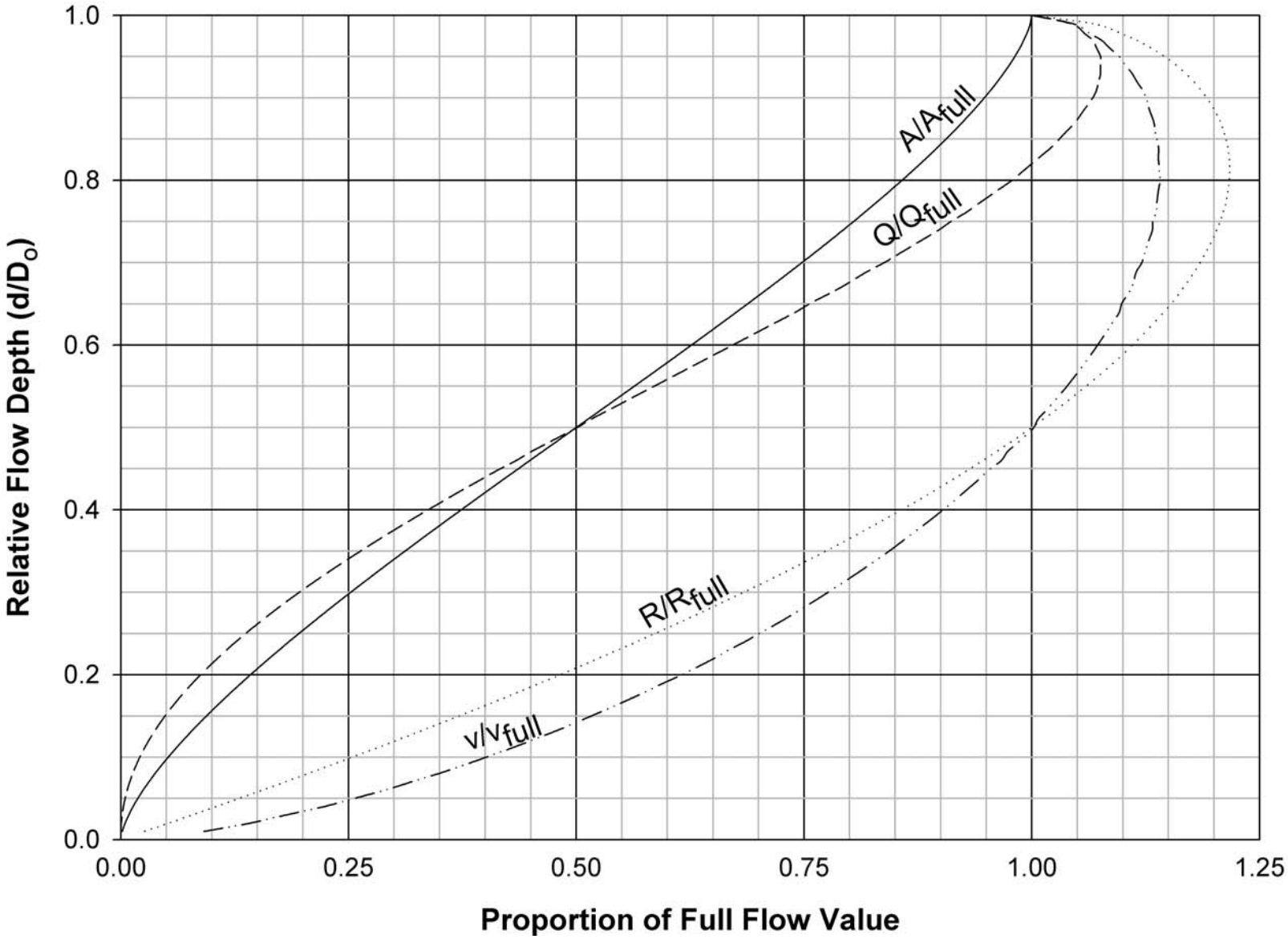

Figure 3-6 Hydraulic Properties of Circular Pipe

Figure 3-7 Basic Structure Head Loss Coefficients for San Diego Regional Standard Cleanouts (see Equation 3-20)

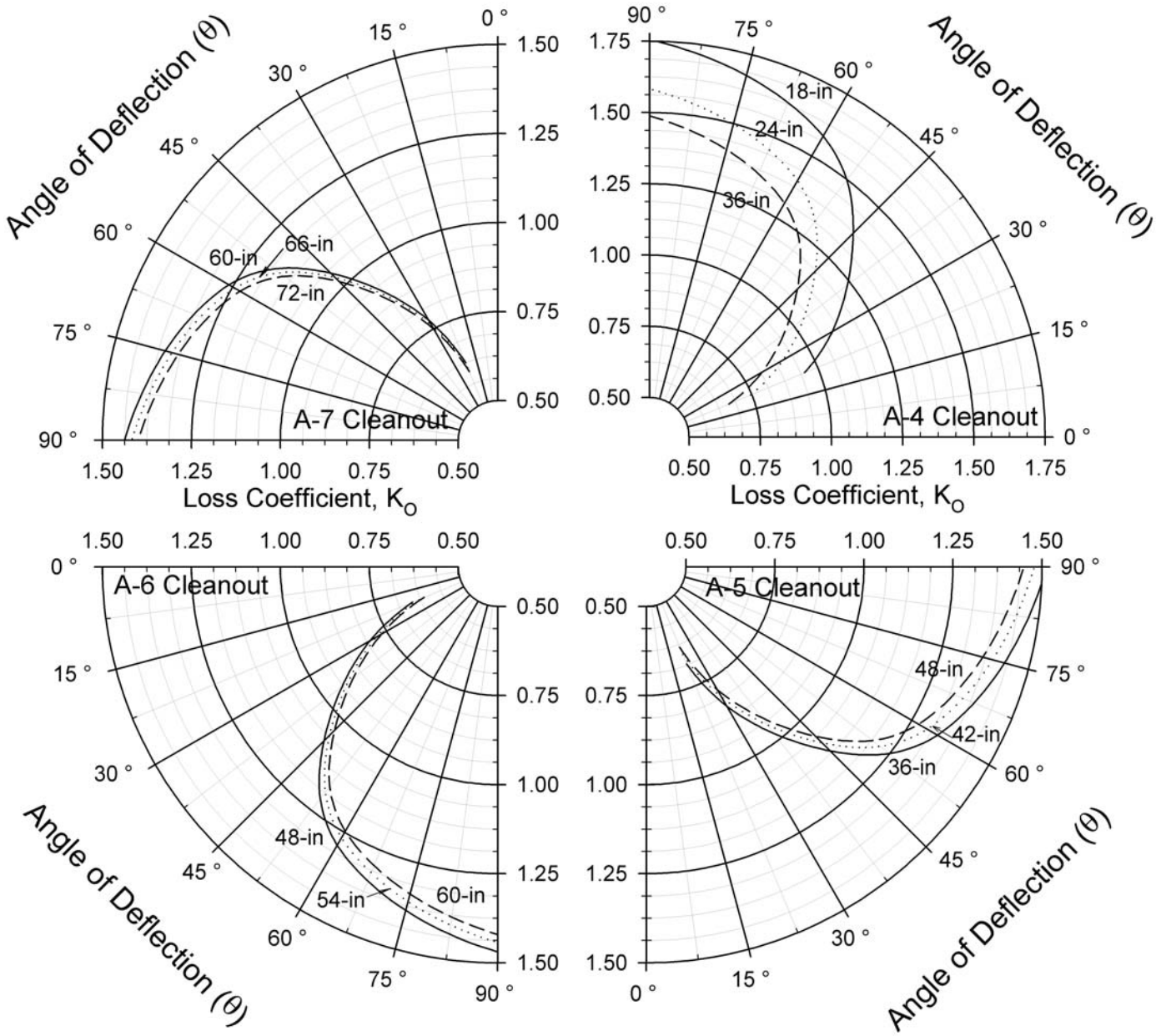

Figure 3-7 Basic Structure Head Loss Coefficients for San Diego Regional Standard Cleanouts (see Equation 3-20)

[THIS PAGE INTENTIONALLY LEFT BLANK]

4 CULVERTS

4.1 INTRODUCTION

Culverts are hydraulically short conduits typically used to convey surface water through a highway or railroad embankment, or other type of obstruction. Culverts are usually designed to take advantage of submergence in order to increase the capacity of the conduit. This Manual provides only a basic level of information on culvert design criteria and design procedures. The Federal Highway Administration's *Hydraulic Design of Highway Culverts* (Hydraulic Design Series No. 5, 2001) provides further information on culvert design.

4.2 GENERAL DESIGN CRITERIA

4.2.1 Hydraulic Criteria

Culverts shall be designed to convey the peak 100-year design flow for public roads. Whenever practical, the culvert shall maintain a minimum gradient of 0.5 percent, or a flow velocity of 4 feet per second when flowing one-quarter full. When outlet velocities exceed permissible velocities for the outlet channel, suitable outlet protection (e.g., energy dissipation or channel lining) shall be provided.

For culvert facilities within the public right-of-way, the minimum culvert size shall be an 18-inch diameter round pipe. This Manual generally references its culvert design criteria and procedures to circular and rectangular cross-sections. These criteria and procedures can be adapted to equivalent cross-sections (e.g., arches and other non-circular or non-rectangular shapes) with due care. Culverts with non-standard cross-section shapes must also adhere to the design criteria in this Manual. Multiple barrel culverts are acceptable, so long as each barrel meets minimum gradient and velocity criteria.

Appendix A, Table A-1, provides recommended Manning Roughness coefficients for culvert.

Culvert headwater elevations shall maintain a freeboard of at least one foot below the roadway centerline or the top of the curb (whichever is lower) and one foot below the finished floors of structures within the zone influenced by the culvert headwater. When a culvert crossing increases the existing limits of flooding, the project owner shall obtain appropriate documentation from affected property owners as required by the governing agency Figure 4-1 provides a definition sketch for a typical culvert installation. A culvert headwall or other slope protection is required when the headwater elevation exceeds the top of the culvert conduit.

Culverts shall follow the alignment and grade of the natural channel whenever possible. In cases where the barrel cannot be aligned with the channel flow line, the angle of flow approaching the inlet shall be less than 90 degrees and the additional head loss due to approach angle shall be accounted for at the entrance of the culvert (see Table 3-15).

4.2.2 Special Culvert Considerations

4.2.2.1 Pipe Material

There is a wide variety of materials that may be used for construction of a drainage system, including: reinforced concrete pipe, cast-in-place concrete conduit, corrugated steel pipe, corrugated aluminum pipe, high-density polyethylene, and other materials. The specified material shall be approved by the governing agency, have a minimum design life of 60 years, and shall meet the design criteria outlined in Appendix B.1 through B.5. Where field conditions dictate the

use of one pipe material in preference to others (e.g., corrosive soil conditions, presence of a groundwater table, or a seawater outfall), the reasons shall be clearly presented in the plans and specifications.

4.2.2.2 Debris Considerations

When a culvert is anticipated to pass significant amounts of debris, the design shall maintain or accelerate the velocity of flow approaching the culvert rather than creating a pond at the entrance, and the design flow shall be increased by an appropriate bulking factor to account for the debris. Multiple barrel culverts have an increased susceptibility to clogging due to debris and sediment. When two or more barrels are used at a culvert crossing, the culvert design shall provide for sufficient maintenance access from the upstream side of the crossing. Chapter 8 ("Debris Barriers and Basins") of this Manual discusses debris barriers or trash racks.

4.2.2.3 Deep Cover Culverts

When the culvert is under cover of 25 feet or more, the culvert shall be over-sized by 6 inches in order to provide for future interior repairs or re-lining.

4.2.2.4 Pipe Abrasion

In cases where a culvert is expected to carry a large amount of debris or abrasive sediment material, it shall be outfitted with protective measures to provide sufficient design life for the facility. When protection is warranted, the invert of the pipe (i.e., the bottom 90 degrees of the pipe) shall be protected on all straight-aways, and the invert and walls (i.e., the lower 180 degrees of the pipe) shall be protected on all curves. The pipe material will dictate the type and degree of protection required.

4.2.2.5 Low-Water Crossings

Low-water crossings (also known as dip crossings, at-grade crossings, or "Arizona crossings") are concrete aprons placed across the streambed to permit vehicles passage at low flow, and permit debris and sediment to pass during periods of high flow. Dip crossings may be used for secondary access crossings of shallow streams, where installation of a culvert or bridge is impractical. Low-water crossings are also often useful as temporary installations, which will be replaced later by an "all-weather" facility.

Designers are encouraged to consult with the governing agency before project submittal in cases where low-water crossings might be proposed. Low-water crossings are not typically permitted for public roads. The designer shall consider the effects on upstream and downstream conditions or adjacent properties. Low-water crossings (if allowed) must conform to criteria in City of San Diego Supplemental Regional Standard Drawing No. SDD-101 (Figure 4-2).

4.2.2.6 Buoyancy Protection

Headwalls, endwalls, slope paving or other means of anchoring to provide buoyancy protection should be considered for all non-concrete culverts. Buoyancy is more serious with steepness of the culvert slope, depth of the potential headwater (debris blockage may increase), flatness of the upstream fill slope, height of the fill, large culvert skews, or mitered ends.

4.3 HYDRAULIC DESIGN OF CULVERTS

The design engineer may complete a culvert analysis using computer programs (e.g., U.S. Army Corps *HEC-RAS River Analysis System*, FHWA *HY-8 Culvert Analysis*, and proprietary programs), or they may use the graphical procedure outlined in the Federal Highway

Administration's *Hydraulic Design of Highway Culverts* (Hydraulic Design Series No. 5, 2001). This basic graphical procedure calculates the culvert headwater following three basic steps:

Step 1. Calculate headwater assuming inlet control (see Section 4.3.1).

Step 2. Calculate headwater assuming outlet control (see Section 4.3.2).

Step 3. Select the maximum headwater elevation from the results of the inlet and outlet control as the design condition.

This minimum performance design procedure provides a conservative design that will help assure adequate performance under the least favorable hydraulic conditions. Figure 4-3 and Figure 4-4 at the end of this Chapter provide examples of inlet-control and outlet-control headwater nomographs, respectively. Appendix C provides selected nomographs from FHWA HDS No. 5.

4.3.1 Inlet Control

Inlet control occurs when the culvert barrel is capable of conveying more flow than the inlet will accept. The control section of a culvert operating under inlet control is located just inside the entrance. Critical depth occurs at or near this location, and the flow regime immediately downstream of the culvert entrance is supercritical. This shallow, high-velocity flow characterizes culverts under inlet control.

Because inlet hydraulic control is upstream, only the headwater and the inlet configuration truly affect culvert performance. The headwater depth (H_W) is measured from the invert of the inlet control section to the surface of the upstream pool. Inlet configuration is characterized by the inlet face area; inlet edge configuration; and inlet shape. The designer should be sure to account for these factors when selecting and applying an appropriate inlet control design nomograph.

Inlet Area. The inlet area is the cross-sectional area of the face of the culvert. Generally, the inlet face area is the same as the barrel area, but for tapered inlets the face area is enlarged, and the control section is at the throat.

Inlet Edge. The inlet edge configuration describes the entrance type. Some typical inlet edge configurations are thin edge projecting, mitered, square edges in a headwall, and beveled edge.

Inlet Shape. The inlet shape is usually the same as the shape of the culvert barrel; however, it may be enlarged as in the case of a tapered inlet. Whenever the inlet face is a different size or shape than the culvert barrel, the possibility of an additional control section within the barrel exists.

Inlet control can be described as unsubmerged, in transition, or submerged. For unsubmerged or low headwater conditions (approximately $H_W/D \leq 1$), the entrance of the culvert operates as a weir and the upstream water surface elevation can be predicted for a given flow rate. For headwaters submerging the culvert entrance (approximately $H_W/D>1.5$), the entrance of the culvert operates as an orifice. The flow transition zone between low headwater (weir control) and the high headwater flow condition (orifice control) is not well defined. Check the weir control condition and orifice control condition and use the most conservative result.

4.3.2 Outlet Control

Outlet control flow occurs when the culvert barrel is not capable of conveying as much flow as the inlet opening will accept. Either subcritical or pressure flow exists in the culvert barrel under these conditions. Therefore, the control section for outlet-controlled flow in a culvert is located at the barrel exit or further downstream. Culverts flowing under outlet control are characterized by relatively deep, lower velocity flow.

All of the factors influencing the performance of a culvert operating under inlet control also influence culverts in outlet control. In addition, the barrel characteristics (roughness, area, shape,

length, and slope) and the tailwater elevation affect culvert performance in outlet control. Refer to Section 3.3.5 for a more complete discussion about tailwater elevation.

4.3.3 Selection of Design Condition

The culvert design condition is determined by comparing the calculated culvert headwater assuming inlet control with the calculated culvert headwater assuming outlet control. The condition with the higher culvert headwater elevation is the design condition.

4.3.4 Outlet Velocity and Protection

Suitable outlet protection (e.g., riprap or channel lining) must be provided when outlet velocities exceed permissible velocities for the outlet channel lining material. Chapter 7 ("Energy Dissipation") discusses the various types and the design of energy dissipaters. This section describes how to calculate outlet velocity of a culvert.

When the controlling headwater is based on inlet control, determine the normal depth and velocity in the culvert barrel. The outlet velocity is assumed to be the same as the velocity within the barrel at normal depth.

When the controlling headwater is under outlet control, and the outlet is not submerged, the depth of flow at the outlet shall be taken as the larger of the tailwater depth and the critical depth in the culvert barrel. The outlet velocity may be determined by dividing the discharge rate by the cross-sectional flow area within the barrel based on the chosen depth.

4.4 REFERENCES

U.S. Department of Transportation, Federal Highway Administration. (September 2001). *Hydraulic Design of Highway Culverts*. Hydraulic Design Series No. 5, 2nd Edition. FHWA-NHI-01-020.

U.S. Department of Transportation, Federal Highway Administration. (May 1987). *HY-8 Microcomputer Program Applications Guide*. FHWA-ED-87-101.

Figure 4-1

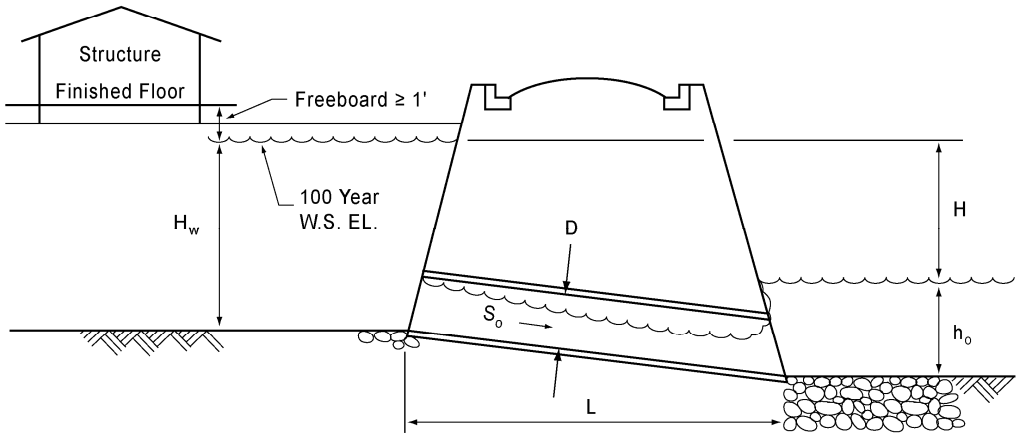

Figure 4-1 Definition Sketch for Culverts

Figure 4-2

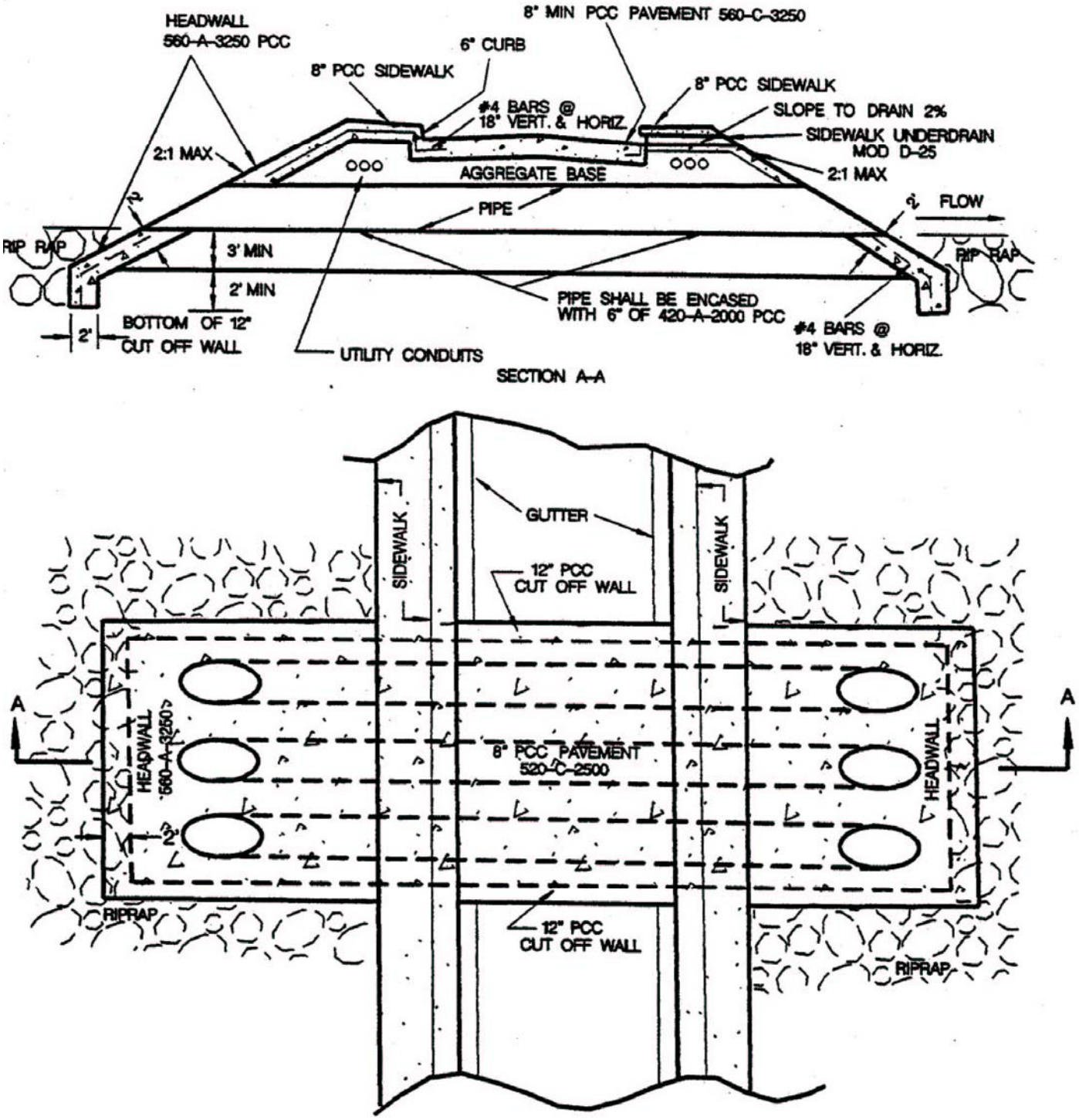

Figure 4-2 Low-Water Crossing

Figure 4-3

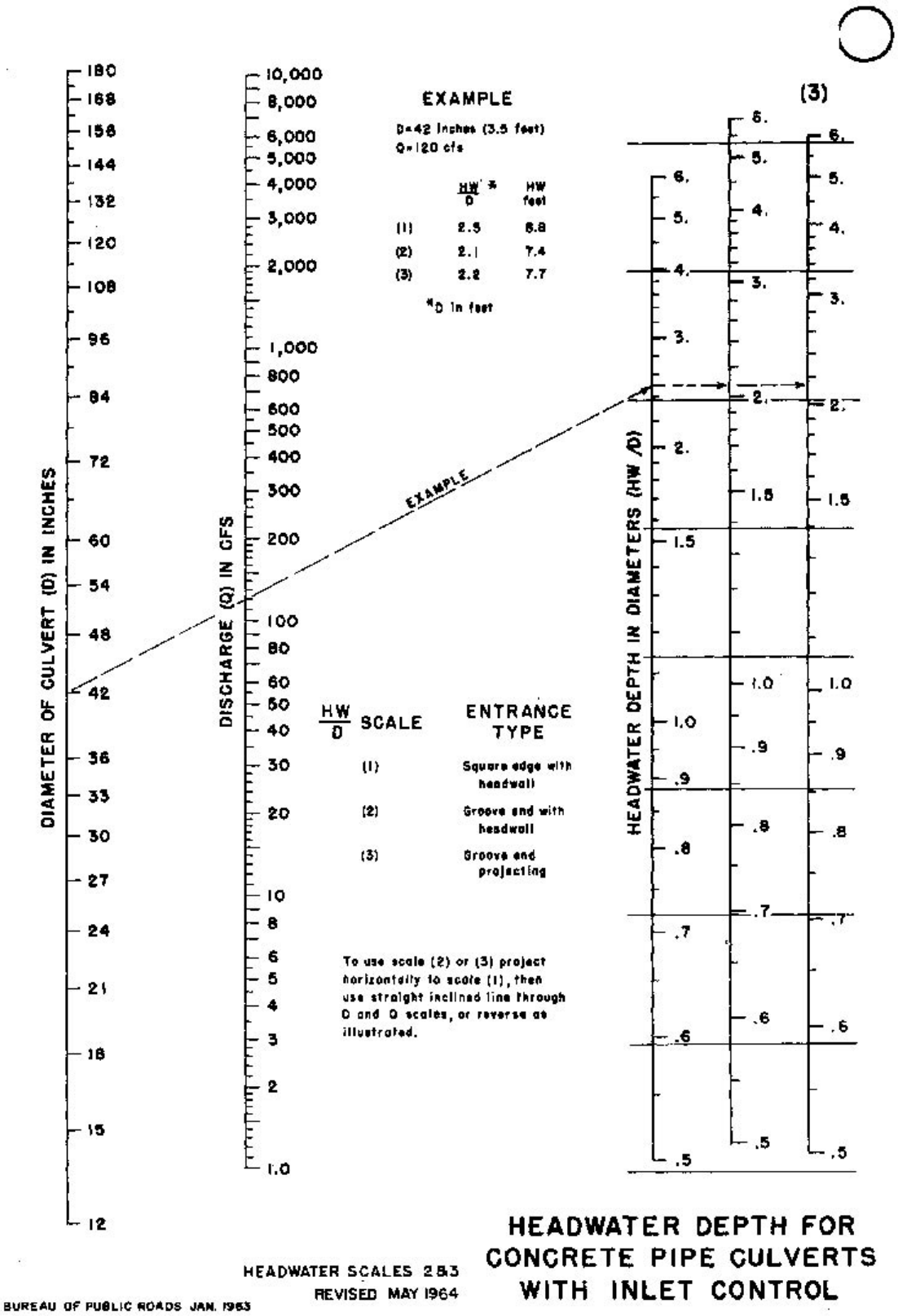

Figure 4-3 Sample Inlet Control Nomograph

Figure 4-4

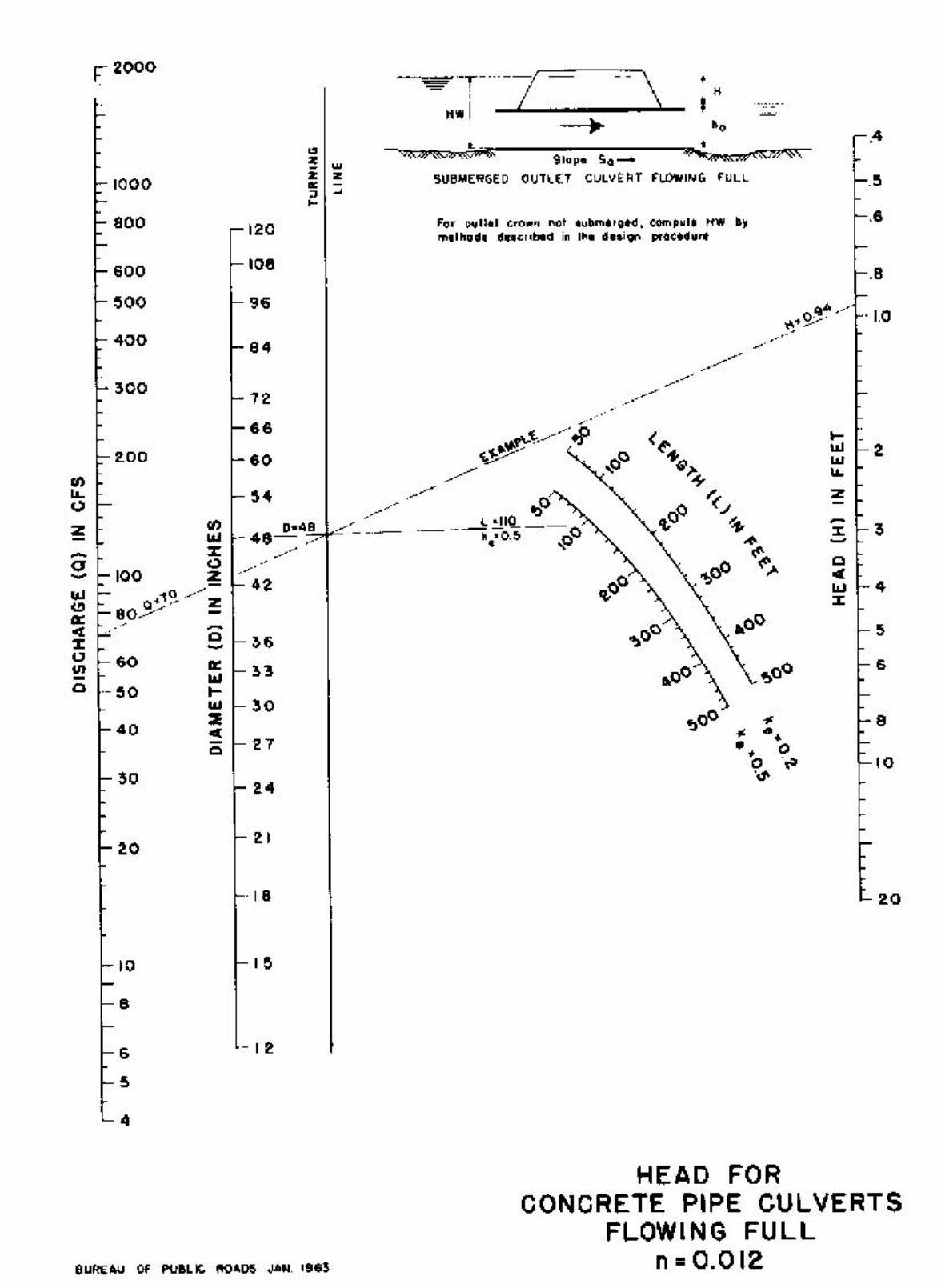

Figure 4-4 Sample Outlet Control Nomograph

5 OPEN CHANNELS

5.1 INTRODUCTION

This Chapter presents technical standards and design criteria for the evaluation and design of natural and engineered open channels, and discusses design standards for various channel types that might be encountered or used in the County of San Diego. This Manual provides only the minimum hydraulic standards for channel evaluation and design.

This Chapter opens with a discussion of the types of open channels and a general approach for the selection of the appropriate channel type for a particular design situation (Section 5.2). Next is a discussion of general open channel design criteria (Section 5.3), which apply to all improved channels, followed by criteria that are specific to a particular channel type (Section 5.4 through Section 5.9).

This Manual discusses open-channel design procedures in the context of channels with rectangular and trapezoidal cross-sections. The criteria and methods can be adapted to other cross-section shapes (e.g., parabolic or composite shapes) with due care.

The ultimate responsibility for a functional channel design lies with the engineer in charge of the design. The execution of this responsibility may require additional analyses and stricter design standards than the minimum standards presented in this Manual.

Lifetime maintenance is critical to maintain the hydraulic capacity and intended function of an open channel facility. Special attention shall be taken to provide appropriate safety measures (e.g., gates, guard rails, and/or fencing) and maintenance access for open channels.

This Manual encourages the design engineer to review related textbooks and other technical literature on the subject for more in-depth discussions on open-channel hydraulics and channel design. Section 5.13 provides a list of related publications that may prove helpful.

5.2 TYPES OF OPEN CHANNELS

Open channels can be categorized as either natural or engineered. Natural channels include all watercourses that are carved and shaped naturally. Engineered channels are those constructed by human efforts. Open channels can be separated into six different types:

- Natural or Designed Alluvial-Bed Channels
- Grass-Lined Channels
- Wetland-Bottom Channels
- Riprap-Lined Channels
- Concrete-Lined Channels
- Other Channel Linings

5.2.1 Natural and Designed Alluvial-Bed Channels

A natural channel is a watercourse formed by natural processes. In general, a natural channel continually changes its position and shape within alluvial valley as a result of hydraulic forces acting on its bed and banks. When feasible, natural channels shall be kept undisturbed, and new development shall be placed at least one foot above 100-year water surface elevations.

A designed alluvial bed channel is a conveyance system designed and constructed to mimic the characteristic of a natural alluvial channel. Designed alluvial bed channels are allowed to change position and shape within channel banks, and most often involve a composite cross-section with low-flow channel and floodplain components.

5.2.2 Grass-Lined Channels

Grass-lined channels are engineered channels with grass or other short-stemmed vegetation lining its bottom and sides. Figure 5-1 illustrates a typical grass-lined channel. Grass-lined channels are often considered the most desirable "rigid" engineered channels from an aesthetic viewpoint. The channel storage, lower velocities, and the sociological benefits of grass-lined channels often create significant advantages over other types of engineered channels. The grass cover can stabilize the channel side slopes, minimize erosion of the channel surface, and control the movement of soil particles along the channel bottom. Low flow channels within the grass-lined channel may need to be concrete or rock-lined to minimize erosion and maintenance. Section 5.5 provides specific design criteria for grass-lined channels.

5.2.3 Wetland-Bottom Channels

Wetland-bottom channels utilize vegetative components and other natural materials in combination with structural measures to construct natural-like channels that are stable and resistant to erosion. Figure 5-2 illustrates a typical wetland-bottom channel. Wetland-bottom channels provide channel storage, slower velocities, and various multiple use benefits. Wetland bottom channels encourage the development of wetlands or certain types of riparian vegetation in the channel bottom. The potential benefits associated with a wetland bottom channel include habitat for aquatic, terrestrial, and avian wildlife and water quality enhancement as the base flows move through the marshy vegetation. The potential benefits of wetland-bottom channels should be measured against additional land requirements, maintenance requirements, and potential vector problems. Section 5.6 provides specific design criteria for wetland-bottom channels.

5.2.4 Riprap-Lined Channels

Riprap-lined channels are channels in which riprap is used for lining the channel banks and bottom. Figure 5-3 illustrates a typical riprap-lined channel. Riprap is a popular choice for erosion protection because the initial installation costs are often less than alternative methods for preventing erosion. However, the design engineer must be mindful that there are additional costs associated with riprap erosion protection since riprap installations require periodic inspection and maintenance. Riprap-lined channels may be permitted in areas of existing development where existing right-of-way limitations preclude the use of vegetated channels. Rock riprap lining might be appropriate in cases where: major flows such as the 100-year flood are found to produce channel velocities in excess of allowable non-eroding values, where channel side slopes must be steeper than 3H:1V, for low flow channels, and where rapid changes in channel geometry occur such as channel bends and transitions. Section 5.7 provides specific design criteria for riprap-lined channels.

5.2.5 Concrete-Lined Channels

Concrete-lined channels are rectangular or trapezoidal channels in which reinforced concrete is used for lining of the channel banks and/or bottom. Figure 5-4 illustrates a typical concrete-lined channel. Concrete-lined channels may be permitted only where existing right-of-way restrictions preclude the use of other channel types, and will be approved on a case-by-case basis. Section 5.8 provides specific design criteria for concrete-lined channels.

5.2.6 Other Types of Channel Lining

There are a variety of engineered channel liners available to the design engineer. These include gabion boxes and mattresses, cable-stayed articulated concrete block mattresses (ACB), interlocked concrete blocks, concrete revetment mats formed by injecting concrete into double-layer fabric forms, and various types of synthetic fiber liners. Section 5.9 discusses design criteria for engineered channel liners.

5.2.7 Selection of Channel Type

The County of San Diego prefers natural channels (refer to Section 1.2 for full explanation). Each type of channel must be evaluated for its longevity, integrity, maintenance requirements and costs, and general suitability for community needs, among other factors. Selection of a channel type that is most appropriate for the conditions that exist at a project site shall be based on a multi-disciplinary evaluation, which may include hydraulic, structural, environmental, sociological, maintenance, economic, and regulatory factors.

5.3 GENERAL DESIGN CRITERIA

This Section presents general hydraulic design standards that are applicable to all improved channels. Section 5.4 provides design criteria for natural and alluvial-bed channels. Section 5.5 through Section 5.9 discuss specific design standards and procedures for five types of fixed-bed channels: grass-lined channels, wetland bottom channels, riprap-lined channels, concrete-lined channels, and channels with other types of linings. The specific requirements for a particular type of channel may be more strict than the general design criteria outlined in this Section.

5.3.1 Hydraulic Capacity

All new open channels shall be designed, at a minimum, to safely confine and convey the runoff from the 100-year design event as prescribed by the current version of the *San Diego County Hydrology Manual*. The County of San Diego prefers that flows that can be conveyed in a 48-inch diameter pipe or smaller be conveyed within underground conduit rather than an open channel, except in an alluvium or heavy debris environment or where the channel may act as a storm water treatment facility.

5.3.2 Manning Roughness Coefficient

Selection of an appropriate channel roughness value for a given channel section is important for the hydraulic capacity analysis and design of open channel. The roughness value can vary significantly depending on the channel type and configuration, density and type of vegetation, depth of flows, and other hydraulic properties.

Appendix A provides recommended values for the Manning roughness coefficient for various channel and overbank types and conditions. Manning roughness coefficients for riprap channels shall be computed based on the criteria outlined in Section 5.7.2.

5.3.3 Uniform Flow and Varied Flow

Open channel drainage systems can be designed assuming uniform flow or varied (non-uniform) flow conditions. Section 5.10.1 presents the uniform flow equation and methods for calculating uniform flow and varied flow.

5.3.4 Vertical and Horizontal Alignment

Open channels shall have a minimum longitudinal gradient of 0.5 percent whenever practical. Flatter grades may be approved with prior consultation with the governing agency. Open channels

with grades flatter than 0.5 percent shall have provisions for the drainage of dry weather low flows.

Horizontal alignment changes of two degrees or less may be accomplished without the use of a circular curve for subcritical flow designs (F_R <1.0, see 0). Curves must be used for supercritical flow designs (F_R >1.0), no matter the degree of change in horizontal alignment. Curved channel alignments shall have super-elevated banks in accordance with Section 5.10.5.

Spiral transition curves shall be used upstream and downstream of curves for supercritical channel designs with reverse curves or horizontal alignments with consecutive circular curves. Spiral curves may also be used to reduce required superelevation allowances and cross-wave disturbances.

5.3.5 Maximum Permissible Velocity

The design of open channels shall be governed by maximum permissible velocity. This design method assumes that a given channel section will remain stable up to a maximum permissible velocity, provided that the channel is designed in accordance with the standards presented in this Manual. Table 5-1 presents the maximum permissible velocities for several types of natural, improved, unlined, and lined channels.

Regardless of these maximum permissible velocities, the channel section shall be designed to remain stable at the final design flow rate and velocity. The design flow may not always yield the highest flow velocity. Therefore, best practice is to confirm channel section stability during events smaller than the design flow. This may be accomplished by evaluating flows of specific more frequent storm events (e.g., 10-year, 2-year, etc.), or testing successive fractions (e.g., one-half, one-quarter, and further if necessary) of the design flow. However, only calculations for the full design flow are required to be submitted for review.

Additional geotechnical and geomorphological investigation and analyses may be required for natural channels or improved unlined channels to verify that the channel will remain stable based on the maximum design velocities.

Table 5-1 Maximum Permissible Velocities for Lined and Unlined Channels

Material or Lining	Maximum Permissible Average Velocity* (fps)
Natural and Improved Unlined Channels	
Fine Sand, Colloidal	1.50
Sandy Loam, Noncolloidal	1.75
Silt Loam, Noncolloidal	2.00
Alluvial Silts, Noncolloidal	2.00
Ordinary Firm Loam	2.50
Volcanic Ash	2.50
Stiff Clay, Very Colloidal	3.75
Alluvial Silts, Colloidal	3.75
Shales And Hardpans	6.00
Fine Gravel	2.50
Graded Loam To Cobbles When Noncolloidal	3.75
Graded Silts To Cobbles When Colloidal	4.00
Coarse Gravel, Noncolloidal	4.00
Cobbles And Shingles	5.00
Sandy Silt	2.00
Silty Clay	2.50
Clay	6.00
Poor Sedimentary Rock	10.0
Fully-Lined Channels	
Unreinforced Vegetation	5.0
Reinforced Turf	10.0
Loose Riprap	Per Table 5-3
Grouted Riprap	25.0
Gabions	15.0
Soil Cement	15.0
Concrete	35.0

** Maximum permissible velocity listed here is basic guideline; higher design velocities may be used, provided appropriate technical documentation from manufacturer. Shear stress calculations are also acceptable, provided the appropriate technical justification is provided.*

5.3.6 Subcritical and Supercritical Flow

Flow can be classified as critical, subcritical, or supercritical according to the level of energy in the flow. This energy is commonly expressed in terms of a Froude Number (F_R) and critical depth (d_c). Section 5.10.1 discusses the characteristics of critical flow and describes methods for determining Froude Number and critical depth. All channel design submittals shall include the calculated Froude Number (F_R) and critical depth (d_c) for each unique reach of channel to identify the flow state and verify compliance with these criteria.

Flow at or near the critical state (F_R=1.0 or d=d_c) is unstable. As a result, minor factors such as channel debris have the potential to cause severe and acute changes in flow depth. Whenever practicable, channels shall be designed to convey their design flow following the flow energy limitations described in Table 5-2. When necessary to convey flows at or near critical state ($0.80 < F_R < 1.20$), flow instabilities may be accommodated by providing additional freeboard.

Table 5-2 Limitations on Flow Energy for Rectangular and Trapezoidal Channels

Design Flow Condition	Froude Number
Subcritical	F_R <0.80
Supercritical	F_R >1.20

In rare cases, the specific energy relationship of a cross-section might result in a situation where flows less than the design flow may have a greater depth than the depth calculated for the design flow. The design engineer shall check supercritical channel designs to evaluate whether the channel will maintain freeboard requirements (Section 5.3.7) during flows less than the design flow (see suggested method in Section 5.3.5).

5.3.7 Freeboard

In the context of this Manual, freeboard is the additional height of a flood control facility (e.g., channel, levee, or embankment) measured above the design water surface elevation. All channel linings shall extend to the design freeboard height. In this way, the freeboard will provide a factor of safety when designing open channels. Freeboard shall be calculated using the maximum Manning roughness coefficient expected during the lifetime of the channel. Unless other information justifies a lower roughness value, the design engineer may assume the maximum lifetime channel roughness to be n=0.150.

Open channel facilities conveying a design flow of less than 10 cfs shall have a minimum freeboard of 0.5 feet. Open-channel facilities conveying a design flow of 10 cfs or more shall have a design freeboard based on a minimum freeboard of 1.0 foot, with allowances for velocity, super-elevation, standing waves, and/or other water surface disturbances such as slug flow. Section 0 and Section 5.10.5 provide design methods for calculating these allowances. Equation 5-1 and Equation 5-2 describe the minimum design freeboard for subcritical and supercritical flow designs, respectively:

$$\left(h_{fr}\right)_{SUBCRITICAL} = \max\begin{cases} 1.0 \\ 0.5 + \dfrac{v^2}{2g} + \dfrac{Cv^2T_W}{rg} + \Delta y \end{cases} \qquad (5\text{-}1)$$

$$\left(h_{fr}\right)_{SUPERCRITICAL} = 1.0 + 0.025vd^{1/3} + \frac{Cv^2T_W}{rg} + \Delta y \qquad (5\text{-}2)$$

where …

h_{fr} = minimum required freeboard (ft);
v = flow velocity (ft/s);
g = gravitational acceleration (32.2 ft/s^2);
$\dfrac{Cv^2T_W}{rg}$ = superelevation allowance (ft), see Section 5.10.6; and
Δy = allowances for other hydraulic phenomenon (ft), (e.g., standing waves, slug flow – see Section 5.10.5.3).

Superelevation allowance is a function of flow velocity, channel geometry, and channel alignment. Applying transition curves to the alignment may reduce the required superelevation allowance. Section 5.10.6 discusses the calculations of superelevation allowance in more detail. The superelevation allowance shall be applied to both banks of the channel. The superelevation allowance shall be applied to channel bends in the following manner:

- Begin at a point five times the characteristic wave length of the design flow ($5L_W$), measured from the downstream tangent point of the curve, with no superelevation allowance.
- Taper uniformly to the full superelevation allowance at a point three times the characteristic wave length of the design flow ($3L_W$), measured from the downstream tangent point of the curve.
- Maintain the full superelevation allowance through the curve.
- Continue the top of bank elevation level from the upstream tangent point of the curve to its intersection with the normal top of bank.

Figure 5-11 illustrates freeboard superelevation allowance. Equation 5-3 and Equation 5-4 describe the characteristic wave lengths for subcritical and supercritical flow, respectively.

$$\left(L_W\right)_{SUBCRITICAL} = 2T_W \tag{5-3}$$

$$\left(L_W\right)_{SUPERCRITICAL} = 2T_W\sqrt{FR^2 - 1} \tag{5-4}$$

where …

L_W = characteristic wavelength (ft);
T_W = top width of water surface (ft); and
FR = Froude Number (no dimension);

The freeboard under the lowest chord of bridge deck (i.e., the soffit elevation) shall be a minimum of 1 foot during the 100-year design event. In cases where the bridge has been designed to withstand hydraulic forces of floodwaters and impact from large floating debris, the water surface elevation upstream of the bridge shall maintain a freeboard of at least one foot below the roadway crest and the finished floors of structures within the zone influenced by the bridge headwater. When a bridge crossing increases the existing limits of flooding, the project owner shall obtain appropriate documentation from affected property owners as required by the governing agency.

This Manual only describes the County of San Diego's minimum freeboard requirements for open channel design. Major drainage ways involving road crossings or other types of crossings, streams that the Federal Emergency Management Agency (FEMA) has mapped as Special Flood Hazard Areas, or facilities that interface with Caltrans facilities might have significantly different freeboard requirements. For instance, FEMA has established freeboard requirements for channels with levees that can vary significantly from those outlined in this Manual.

5.3.8 Flow Transitions

Channel transitions occur in open channel design whenever there is a change in channel slope or shape and at junctions with other open channels or storm drain. Properly designed flow transitions mimic the expansion or contraction of natural flow boundaries as best as possible, as well as minimize surface disturbances from cross-waves and turbulence. Drop structures and

hydraulic jumps are special transitions where excess energy is dissipated by design. Transitions in open channels are generally designed for either subcritical or supercritical flow transitions.

Hydraulic jumps shall be designed to take place only within energy dissipation or drop structures, and not within an erodible channel. Subcritical transitions shall satisfy the minimum transition lengths described in Section 0. Supercritical transitions shall satisfy the minimum transition lengths described in Section 5.10.5. Special transitions such as drop structures and hydraulic jumps shall satisfy the specifications described in Section 5.12.

5.3.9 Access and Safety

5.3.9.1 Access

Any easement encompassing a channel shall be wide enough to provide for the channel structure and adequate maintenance access. Easements shall be placed on one side of lot or ownership lines in new developments and in existing development where conditions permit.

- The minimum width of any channel easement shall be the top width of channel plus 4 feet on each side of the channel.
- Channels with a top width of less than 40 feet require a minimum 12-foot wide service road parallel and adjacent to one side of the channel and a 4-foot wide access on the opposite side, whenever practicable.
- Channels 40 feet or more in top width require a minimum 12-foot wide service road on both sides of the channel, whenever practicable.

Service roads parallel to a channel facility may be omitted when the lack of a service road is not considered detrimental to the maintenance and integrity of the channel. The following are examples of circumstances where service roads parallel to the channel facility may be omitted:

- Channels with a bottom width of 8 feet or less, with a maximum design flow depth of 2 feet.
- Channels with a bottom width of more than 8 feet and a maximum design flow depth of more than 2 feet may omit access roads parallel to the channel when suitable exit-entry ramps are provided at street crossings and at other locations to facilitate travel of maintenance vehicles in the channel bottom. At a minimum, one access ramp must be provided at each end of the channel.

In all cases, vehicular access to the channel facility must be provided at intervals of 1000 feet or less, whenever practical. Access easements must be at least 12 feet wide, with a maximum grade of fifteen percent (15%).

Access ramps shall slope down in the down-gradient direction whenever practicable. Access ramps designed for personnel access shall have a maximum slope of 10 percent. When designed to accommodate vehicular traffic, maintenance access ramps shall be designed to County of San Diego private road standards.

5.3.9.2 Safety

Specific safety requirements shall be determined on a case-by-case basis in consultation with the governing agency. As a minimum, guardrails or other approved traffic barriers as described in the San Diego County *Traffic Manual* shall be provided when a channel is located next to traffic.

Fencing or access barriers, as required by the governing agency, is required for channels abutting residential developments, schools, parks, and pedestrian walkways as follows:

- Fencing is required for all concrete-lined or riprap-lined channels where the design frequency storm produces a velocity that exceeds 5 feet per second and 2 feet in depth or a combination thereof for a factor of ten (10) within five feet of the water's edge during design flow conditions. This requirement does not apply to brow ditches.
- Fencing or access barriers required for all unlined alluvial-bed, grass-lined, and wetland-bottom channels with sideslopes steeper than 4H:1V where the design frequency storm produces a velocity that exceeds 5 feet per second and 2 feet in depth or a combination thereof for a factor of ten (10) within five feet of the water's edge during design flow conditions.

Gates shall be provided for maintenance and emergency access at regular intervals, with 20-foot wide gates placed 1,000 feet on center and 4-foot gates placed 500 feet on center or portion thereof. Fencing or access barriers shall be located a minimum of 6 inches inside the easement boundary lines unless otherwise approved.

Any fence proposed that would be placed within a floodway, that would not be parallel to the direction of flow would need to be designed to ensure that it would not obstruct peak flows. Acceptable designs need to demonstrate that the proposed fence will: fail due to a force less than that of the site specific 1% annual chance peak flow, and; be tethered or anchored in such a way to ensure that the failed portions would not be swept downstream, or impede flow.

5.3.10 Environmental Permitting

Open channel facilities are often located within or adjacent to sensitive environmental areas. The design engineer must investigate which permits might be necessary from various agencies, including but not limited to: U.S. Army Corps of Engineers (e.g., Section 404 Wetland Permit), U.S. Fish and Wildlife Service, California Department of Fish and Game (e.g., Section 1600 Permit), California State Water Resources Control Board and Regional Water Quality Control Board (e.g., Section 401 Water Quality Certification), and California Coastal Commission. It is important that the final permits and/or permit conditions allow for the future and perpetual maintenance of a channel facility without the necessity of returning to a permitting agency for regular maintenance activities.

5.3.11 Maintenance

Where failure of an open-channel facility might cause flooding of a public road or structure, the facility shall have an operation and maintenance plan. These operation and maintenance plans shall specify regular inspection and maintenance at specific time intervals (e.g., annually before the wet season) and/or maintenance "indicators" when maintenance will be triggered (e.g., vegetation more than 6 inches in height). Operation and maintenance plans shall ensure that vegetation is removed or maintained on a regular basis to maintain the function of the facility.

Flood control channels require lifetime maintenance. The project owner and design engineer shall consult the governing agency for determination of which maintenance mechanism is required for a particular project. At a minimum, privately owned and maintained open channel facilities shall have a recorded easement agreement with a covenant binding on successors or other mechanism acceptable to the governing agency.

5.4 DESIGN CRITERIA – STABILIZATION OF EXISTING CHANNELS

Open channels are important drainage elements that contribute to the image and livability in an urban environment. The areas around open channels may have multiple uses that integrate trails, open space corridors, and wildlife habitat.

5.4.1 Existing Channels and Channel Stabilization

When designing a project that affects an existing drainage course, the design engineer shall evaluate the potential project effects on velocity, flow variation, width, depth, change in slope, scour, deposition, vegetation growth, effects to tributary streams, and other effects due to permanent structures within the channel (e.g., bridge piers) or other project conditions (e.g., changes to peak discharge). The project design shall evaluate the long-term effects within the project boundaries as well as upstream and downstream of the project, and channel alterations or channel stabilization shall be incorporated into the project when deemed necessary. Engineering judgment, the development process, and the guidelines of the governing agency will determine the requirements for the stabilization of drainage channels.

Natural channels shall remain in their natural state whenever practicable. New development shall be set back from natural floodplains when practicable, and placed at least one foot above 100-year water surface elevation. Because some natural channels tend to migrate horizontally, the required setback distance shall be determined through appropriate hydraulic and scour analyses that evaluate the stability, flow velocity, and materials of the subject drainageway. All modifications within the 100-year floodplain shall be done in accordance with currently adopted floodplain development and management regulations and guidelines of the governing agency.

The design engineer shall identify the capacity of a natural drainageway relative to a 100-year design event and delineate areas inundated by the 100-year design event, and assess the relative channel stability in both plan and profile.

When the stability analysis demonstrates that either bank erosion outside of the designated flow path (as defined by flowage easement and/or right-of-way), or that channel degradation is likely to occur, then an analysis of the magnitude and extent of the erosion may be necessary. In such a condition, the design engineer shall confer with the governing agency to determine:

- what additional analysis might be necessary (if any) to estimate the potential extent of lateral and vertical channel movements;
- what is the potential risk to the proposed development from channel degradation and/or bank failure;
- what solutions and/or remedies might be available to mitigate the potential risk due to the channel instability.

5.4.2 Bank-Lined Channels

Bank-lined channels are a type of channel stabilization where the banks are lined but the channel bottom remains in a natural state with minimal regrading. Figure 5-5 illustrates an example of a bank-lined channel. Bank-lined channel designs attempt to minimize scour of the channel bottom at the bank lining interface as well as maintaining a stable natural channel. The bank lining shall extend below calculated scour depths at the lining interface, if possible, and provide the minimum freeboard as outlined in Section 5.3.7. If not possible, the use of launchable riprap toe may be allowed based on Corps of Engineers EM 1110-2-1601 or FHWA HEC-11.

5.4.3 Bio-Engineered Channel Stabilization

Traditionally, the “hard lined” channel stabilization techniques (i.e., riprap, gabion, concrete, etc.) have been used to stabilize erosion problem areas. Bioengineering is an applied science that integrates structural, biological and ecological principles to construct living structures (plant communities) for erosion, sediment, and flood control purposes. In many instances, “bio-engineered” channel stabilization measures can be safely utilized in place of “hard lined”

measures, and these methods are encouraged whenever practical. Successful application of "bio-engineered" stabilization measures depends upon accurate diagnosis of the causes of channel stability problems, rather than just treating visible problem areas. Section 5.13 provides useful resources on bioengineered solutions for natural channel stabilization.

5.4.4 Design of Storm Drain Outlets

When proposing a new storm drain outlet that directs flow to an existing fluvial-bed or other natural (unarmored) channel, analyses shall be performed to demonstrate the ability of the receiving channel to perform reliably for many years under a range of post-project flow conditions (e.g. Q2 – Q100), without suffering stability failures due to excessive channel erosion or creating problems related to sediment deposition downstream. The assessment should consider the effect of both discharge and sediment on specific stream power and the expected effect in consideration of bed and bank materials, channel morphology, surficial geology, and floodplain width. The design procedures found in Section 5.11 may be applied to analyses of the existing channel to determine the long term reliability. See also sections 5.3.5 and 5.4.1 for related discussions. Storm drain outlets shall be constructed with erosion protection when they discharge to unlined channels or drainage courses. Chapter 7 of this Manual discusses the requirements for outlet protection.

5.5 DESIGN CRITERIA – GRASS-LINED CHANNELS

This Section presents minimum design criteria for grass-lined channels. The design engineer is responsible for confirming that a channel design meets these criteria, the general open-channel criteria outlined in Section 5.3, and any special considerations for a particular design situation.

5.5.1 Longitudinal Channel Slopes

Grass-lined channel slopes are dictated by maximum permissible velocity requirements. Where the natural topography is steeper then desirable, drop structures may be utilized to maintain design velocities. Grass-lined channels shall have a minimum longitudinal gradient of 0.5 percent whenever practical (see Section 5.3.4).

5.5.2 Roughness Coefficient

Appendix A (Table A-4) provides appropriate Manning roughness coefficients for grass-lined channels. The Manning roughness coefficient used in evaluating channel capacity shall assume a mature channel (i.e., substantial vegetation with minimal maintenance), resulting in a roughness coefficient of n=0.150. For evaluating channel slope and permissible velocity, the Manning roughness coefficient may assume a freshly mowed condition.

5.5.3 Low Flow and Trickle Channels

Waterways that are normally dry prior to urbanization will often have a continuous flow after urbanization because of lawn irrigation return flows, both overland and from ground water in-flow. Since continuous flow over grass will destroy a grass stand and may cause the channel profile to degrade, a *trickle channel* is required on all urban grass-lined channels. Usually, concrete trickle channels are preferred because of their ease of maintenance. Other types of trickle channels, such as rock-lined trickle channels, are acceptable if they are properly designed. Trickle channels are not appropriate for grass-lined channels intended for water quality treatment.

Trickle channels may not be practical on larger streams and rivers, or in channels located on sandy soils. In these cases, a *low flow channel* may be a more appropriate choice.

5.5.3.1 Trickle Channels

Trickle channels are recommended for grass-lined channels with a 100-year design flow less than or equal to 200 cfs. The trickle channel capacity shall convey 5 percent of the 100-year design flow rate or 5 cfs, whichever is greater. There is no freeboard requirement for trickle-channels. The flow capacity of the main channel shall be determined without considering the flow capacity of the trickle channel. Care shall be taken to ensure that low flows enter the trickle channel without flow paralleling the trickle channel or bypassing the inlets.

Trickle channels are not typically required for swales and other grass-lined channels conveying a 100-year peak runoff of 20 cfs or less. For these smaller channels, the design engineer shall evaluate the factors such as drainage slope, flow velocity, soil type, and upstream impervious area, and specify a trickle channel when needed based on their engineering judgment. Permeable Pavement Trickle Channel

Permeable pavements allow water to infiltrate through surfaces that would normally be impermeable, such as concrete channels. Pervious surface treatments have numerous benefits; they reduce the impacts of stormwater runoff by retaining the water sub-surface as it gradually infiltrates the soil; they hold the storm water in multiple air voids or cells which also assists in pollution control through degradation of hydrocarbons into carbon dioxide and water, and retaining metals in the structure keeps them from the groundwater table.

Design of permeable structures generally include a permeable surface such as asphalt or portland cement concrete over a base of fines, which help to filter the water, and uniformly graded gravel, which stores the water as it infiltrates through the ground below the structure. An uncompacted soil base is highly recommended, and construction practices which emphasize this are critical for groundwater recharge. Permeable pavement trickle channels shall have a minimum depth of 6 inches, with the Manning roughness coefficient determined as described in Appendix A.

Typical applications of permeable pavement trickle channels include porous asphalt, articulated concrete block, concrete pavers, and turf reinforcing mats.

Articulated Concrete Block

Articulated concrete blocks (ACBs) are a flexible revetment system that provide effective erosion control and can also include plantings to maintain a natural appearance. Articulated concrete blocks are effective and economical for a wide range of erosion problems, and are easily installed above or below the water line, as either cabled or non-cabled systems. An ACB system is comprised of a matrix of individual concrete blocks placed together to form an erosion-resistant revetment with a geotextile underlay for subsoil retention. Several varieties of ACB systems are available: interlocking, cable-tied and noncable-tied matrices, and open cell and closed cell varieties. Open cell units contain open voids within individual units that facilitate placement of aggregate and/or vegetated soil. Closed cell units are solid, concrete elements that are capable of allowing vegetation growth between adjacent units. ACB systems are well suited to channel lining applications, in particular, for lateral stream stability. The articulating characteristic allows the systems to be placed effectively at bends and regions of vertical change, such as sloping grade control structures.

Concrete Pavers

Concrete pavers, or porous paver blocks, are interlocking units which are partially pervious. Water drains through the areas between each block. These spaces can be filled with gravel or grass, and offer drainage and an attractive finish. In addition to trickle channels, paver blocks are

typically used in low traffic areas, such as walking paths or driveways. Concrete pavers should be limited to trickle channels that are not expected to convey much fine sediment.

Turf Reinforcing Mats

Turf reinforcing mats *have* many different names, including plastic geocells and reinforced turf. The sheets of connected cells stabilize the soil, while holding gravel in place or creating space for grass to grow. In addition to trickle channels, reinforced turf is used in pedestrian walkways, emergency access lanes, trails, and auxiliary parking.

Concrete Trickle Channel

Concrete trickle channels can help prevent erosion, silting, and excessive plant growth. Concrete trickle channels are not appropriate for wetland-bottom channels (see Section 5.6) or swales intended for water quality treatment. Figure 5-6 illustrates a typical concrete trickle channel. The concrete trickle channel shall have a minimum depth of 6 inches. A Manning roughness coefficient value of n=0.015 will be used to design the concrete trickle channel. At a minimum, concrete trickle channels shall be 6 inches thick with #4 reinforcement 12 inches on-center in each direction.

Rock-Lined Trickle Channel

Rock-lined trickle channels shall have a minimum depth of 12 inches, with the Manning roughness coefficient determined as described in Section 5.7.17. The minimum stone size for rock-lined trickle channels shall be 6 inches.

5.5.3.2 Low Flow Channels

Low-flow channels are used to contain relatively frequent flows within a recognizable channel section. Low-flow channels are recommended for channels with a 100-year flow greater than 200 cfs, and at a minimum have the capacity to convey the 2-year flow event with no freeboard. The overall flow capacity of the channel shall include the capacity of the low flow channel.

Low-flow channels shall have a minimum depth of 12 inches. The side slopes of the low-flow channel shall be 2.5H:1V to 3H:1V whenever practicable. The main channel depth limitations (Section 5.5.5) do not apply to the low-flow channel area of the overall channel cross-section. Wetland bottom channels are discussed in Section 5.6.3.

5.5.4 Bottom Width

The selection of the overall channel bottom width shall consider factors such as possible wetland mitigation requirements, constructability, channel stability and maintenance, multi-use purpose, and width of the low flow channel (if any).

5.5.5 Freeboard and Flow Depth

Swales and grass-lined channels conveying a 100-year flow less than or equal to 10 cfs shall have a minimum freeboard of 0.5 foot. Grass-lined channels conveying larger discharges shall meet the minimum freeboard requirements outlined in Section 5.3.7.

The recommended design depth of flow for a grass-lined channel (outside the low flow channel area) is 5.0 feet for a 100-year flow of 1,500 cfs or less whenever practical. Excessive depths shall also be avoided in channels with greater design flows to the maximum extent practicable. Section 5.3.9 discusses access and safety for open channels, including thresholds for flow depth and velocity.

5.5.6 Side Slopes

Side slopes of a grass-lined channel shall be not be steeper than 3H:1V.

5.5.7 Grass Lining

Satisfactory performance of a grass-lined channel depends on constructing the channel with the proper shape and preparing the area in a manner to provide conditions favorable to vegetative growth. Between the time of seeding and the actual establishment of the grass, the channel is unprotected and subject to considerable damage unless interim erosion protection is provided. Jute, plastic, paper mesh, hay mulch may be used to protect the waterway until the vegetation becomes established.

The grass lining for channels may be seeded or sodded with a grass species that is adapted to the local climate and will flourish with minimal irrigation. Channel vegetation is usually established by seeding. In the more critical sections of some channels, it may be desirable to provide immediate protection by transplanting a complete sod cover. All seeding, planting, and sodding shall conform to local landscape recommendations.

5.5.8 Horizontal Channel Alignment and Bend Protection

The potential for erosion increases along the outside bank of a channel bend due to the acceleration of flow velocities on the outside part of the bend. Thus, it is often necessary to provide erosion protection in natural or grass-lined channels that otherwise would not need protection.

The minimum radius for channels with a 100-year runoff of 20 cfs or less shall be 25 feet. For channels carrying larger flows, horizontal channels alignment shall be limited based on the presence of erosion protection.

No channel bend protection is required along bends where the radius is greater than two times the top width of the 100-year water surface or the channel is constructed in erosion-resistant soils. Channels without bend protection are not allowed to have a curvature with a radius of less than two times the 100-year flow top width or less than 100 feet, whichever is greater.

Channel bends built in areas with erosive soil conditions shall always have erosion protection. When erosion protection is provided, channels are allowed to have minimum radius equivalent to 1.2 times the 100-year flow top width, but in no case shall the radius of curvature be less than 50 feet.

Erosion protection shall extend downstream from the end of the bend a distance that is equal to the length of the bend measured along the channel centerline.

5.5.9 Maintenance

Grass-lined channels shall be maintained to ensure that vegetation is removed or maintained on a regular basis to maintain the function of the facility. The project owner shall ensure that appropriate mechanism is in place to provide maintenance for the lifetime of the facility.

5.5.10 Water Quality Design Parameters

When it is desired to use a grass-lined channel to meet water quality concerns it shall be designed to the guidelines presented in Section 5.5 in addition to any water quality requirements set forth in the appropriate Standard Urban Stormwater Mitigation Plan. In general, the grass-lined channel shall be designed to meet the water quality parameters (contact time, slope, etc.) while containing the desired flood control flow safely as defined in Section 5.5.

5.6 DESIGN CRITERIA – WETLAND BOTTOM CHANNEL

This Section presents minimum design criteria for wetland-bottom channels. The design engineer is responsible for confirming that a channel design meets these criteria, the general open-channel criteria outlined in Section 5.3, and any special considerations for a particular design situation.

When designing a wetland-bottom channel, the design engineer must consider both the interim ("new channel") condition and ultimate ("mature channel") condition. For the interim condition, the channel shall maintain non-erosive velocities under the design flow (Section 5.6.1). The design engineer shall evaluate the channel conveyance capacity under ultimate conditions (Section 5.6.2).

5.6.1 Longitudinal Channel Slope

The design engineer shall establish a longitudinal channel slope that maintains non-erosive velocities during the interim condition (a.k.a. the "new channel" condition), assuming minimal or immature wetland vegetation in the channel bottom. Table 5-1 provides guidelines for maximum permissible velocity. Wetland-bottom channels shall maintain a minimum longitudinal slope of 0.5 percent whenever practicable (see Section 5.3.4).

The design engineer may increase the maximum permissible velocity when temporary erosion control measures are properly installed and maintained during the interim condition. The design engineer may also employ temporary grade control structures to reduce the effective slope of the channel during the interim condition. The Froude Number for wetland-bottom portions of a channel during the interim condition shall not exceed $F_R = 0.7$. Where topography is steeper than desirable, permanent drop structures may be used to maintain design velocities.

5.6.2 Roughness Coefficients

Appendix A (Table A-5) provides recommended values for the Manning roughness coefficient for various channel types and overbank conditions. As discussed in Section 5.6.1, a Manning roughness coefficient assuming new channel condition may be used to determine the longitudinal channel slope. A Manning roughness coefficient representing full vegetated growth on the channel bottom (a.k.a. the "mature channel" condition) may be used to determine channel capacity and evaluate freeboard requirements. Unless other information justifies a different roughness value, the design engineer may assume a mature channel roughness of n=0.150 (typical of dense riparian vegetation).

5.6.3 Low-Flow and Trickle Channels

Concrete trickle channels are not permitted in wetland bottom channels. Low-flow channels may be used when the 100-year flow exceeds 1,000 cfs in wetland bottom channels. Low-flow channel design shall be as discussed in Section 5.5.3.2.

5.6.4 Bottom Width

The selection of the over-all channel bottom width shall consider factors such as ultimate conveyance requirements, constructability, channel stability, and maintenance.

5.6.5 Freeboard and Flow Depth

Wetland-bottom channels shall meet the minimum freeboard requirements outlined in Section 5.3.7. Whenever practicable, excessive depths and velocities shall be avoided for public safety considerations (see Section 5.3.9).

5.6.6 Side Slopes

Side slopes of wetland-bottom channels shall not be steeper than 3H:1V whenever practical. When the side slopes of a wetland-bottom channel are grass-lined, refer to the guidelines provided in Section 5.5.

5.6.7 Horizontal Channel Alignment and Bend Protection

Channel bends shall be designed according to the criteria provided in Section 5.5.8.

5.6.8 Maintenance

Wetland-bottom channels require a maintenance and operation plan, along with appropriate easements and mechanisms for assuring the perpetual maintenance of the facility. The project owner shall ensure that appropriate mechanism is in place to provide maintenance for the lifetime of the facility.

5.7 DESIGN CRITERIA – RIPRAP-LINED CHANNELS

This Section presents minimum design criteria for rock riprap-lined channels. Riprapped transitions and bends in otherwise non-riprap channels are also considered riprap-lined channels, and shall be designed in accordance with the design standards outlined in this Section. The design engineer is responsible for confirming that a channel design meets these criteria, the general open-channel criteria outlined in Section 5.3, and any special considerations for a particular design situation.

5.7.1 Longitudinal Channel Slope

The longitudinal slope of riprap-lined channels shall be dictated by maximum permissible velocity requirements. Table 5-3 summarizes the maximum permissible velocity for standard riprap gradations. Where topography is steeper than desirable, drop structures may be used to maintain design velocities (see Section 5.12).

Table 5-3 Channel Bottom Riprap Protection

Design Velocity (ft/s)	Rock Gradation
6-10	No. 2 Backing
10-12	¼ ton
12-14	½ ton
14-16	1 ton
16-18	2 ton
> 18	Special Design

5.7.2 Roughness Coefficients

The Manning roughness coefficient (n) for hydraulic computations shall be estimated for loose rock riprap using the Manning-Strickler equation (Equation 5-5). Equation 5-5 (Chang, 1992) does not apply to grouted rock riprap or to very shallow flow. Table 5-4provides Manning roughness coefficients for standard rock riprap classifications based on the Manning-Strickler method.

$$n = 0.0395 d_{50}^{1/6} \qquad (5\text{-}5)$$

where ...

n = Manning roughness coefficient (dimensionless); and

d_{50} = median stone diameter (feet).

Table 5-4 Standard Rock Riprap Gradations

##Rock Gradation [a]	Median Stone Weight (W_{50}) [c]	Median Stone Diameter (d_{50}) [d]	Manning n (Ungrouted) [e]
No. 3 Backing	5 lb	0.4 ft	0.034
No. 2 Backing	25 lb	0.7 ft	0.037
No. 1 Backing [b]	75 lb	1.0 ft	0.039
Light	200 lb	1.3 ft	0.041
¼ Ton	500 lb	1.8 ft	0.044
½ Ton	1000 lb	2.3 ft	0.045
1 Ton	2000 lb	2.9 ft	0.047
2 Ton	4000 lb	3.6 ft	0.049

(a) Except for 2 ton rock, classification is based upon Caltrans Method B Placement, which allows dumping of the rock and spreading by mechanical equipment. Local surface irregularities shall not vary from the planned grade by more than 1 foot, measured perpendicular to the slope. Two-ton rock requires special placement, see Caltrans (2002) or Greenbook for more information. (b) No. 1 Backing has same gradation as Facing Riprap. (c) per Caltrans (2002). (d) Assumes specific weight of 165 lb/ft3. The designer shall take care to apply a unit weight that is applicable to the type of riprap specified for the project, and adjust their calculations when necessary. (e) Based on Manning-Strickler relationship (Chang, 1988).

Where hydraulic radius is less than or equal to two times the maximum rock size, the roughness coefficient will be greater than indicated by Equation 5-5. In these cases, the design engineer shall use the method outlined in Section 5.7.17 to calculate the roughness of the channel. Appendix A (Table A-3) provides recommended Manning roughness coefficient (*n*) for grouted riprap applications. A 20% roughness coefficient reduction (N grouted = 0.80 N ungrouted) for grouted rip-rap shall be required for velocity-based design for energy dissipation/scour minimization measures applications. For channel capacity design, the roughness coefficients in Table 5-4 and Appendix A shall be used.

5.7.3 Low Flow and Trickle Channels

Riprap-lined channels conveying a 100-year peak runoff of 20 cfs or less do not require trickle channels. The design engineer shall evaluate the factors such as drainage slope, flow velocity, soil type, and upstream impervious area, and specify a trickle channel when needed based on their engineering judgment. Low-flow channels shall be designed in accordance with Section 5.5.3.2.

5.7.4 Bottom Width

The selection of the over-all channel bottom width shall consider factors such as ultimate conveyance requirements, constructability, channel stability, and maintenance.

5.7.5 Freeboard and Flow Depth

Riprap-lined channels shall meet the minimum freeboard requirements outlined in Section 5.3.7. Excessive depths and high velocities shall be avoided whenever practicable to maintain public safety. Section 5.3.9 discusses access and safety for open channels, including thresholds for flow depth and velocity.

5.7.6 Side Slopes

The side slopes of riprap-lined channel shall not ordinarily be steeper than 2H:1V, except in cases where an embankment stability analysis can justify a steeper side slope. The stability analysis should be completed in consultation with a soils engineer, and consider such factors such as: soil

characteristics; groundwater and river conditions; special construction methods and designs (e.g., hand-placed stone keyed well into the bank); shear forces of flow; angle of repose of the riprap; rapid water-level recession.

5.7.7 Horizontal Channel Alignment

Horizontal channel alignment shall be carefully coordinated with the riprap size and configuration (i.e., fully lined or bank-lined) and checked to ensure adequate erosion protection at the toe of the channel bank to account for variations in flow velocity through curves.

5.7.8 Rock Riprap Material

Rock used for riprap shall be hard, durable, angular in shape, and free from cracks, overburden, shale and organic matter. Neither the breadth nor thickness of a single stone shall be less than one-third of its length; rounded stone shall be avoided. Rock having a minimum specific gravity of 2.65 is preferred. Construction debris (e.g., broken concrete or asphalt) is typically not appropriate for use as riprap. Table 5-5 summarizes common rock riprap gradations from Caltrans and the APWA Southern California Greenbook. Section 200 of the Greenbook and Section 72 of the Caltrans Standard Specification provide more detailed specifications for rock riprap material.

5.7.9 Rock Riprap Stone Weight and Gradation

This section discusses the selection of rock riprap gradation for open channels with non-turbulent flow (e.g., not immediately downstream of stilling basins) and with longitudinal slopes of less than 2 percent. Section 5.7.17 provides guidance for riprap design for steep channels.

5.7.9.1 Rock Gradation

Caltrans has developed several standard rock gradations for riprap slope protection of stream banks and shores. Table 5-5 summarizes common rock riprap gradations from Caltrans and the APWA Southern California Greenbook. Figure 5-7 illustrates an example of riprap sizing for bank protection. Other standard riprap specifications, such as from the Federal Highways Administration (FHWA) or Corps of Engineers, are also acceptable for facility design in the County of San Diego when appropriately applied.

5.7.9.2 Minimum Stone Weight

Riprap channel design involves an iterative process between calculated roughness, stone stability, and channel geometry to achieve an economical and practical combination of channel factors and stone gradation. The design criteria outlined here and in following sections reference general APWA Southern California Greenbook and Caltrans standards. Other riprap-lined channel design methods such as the Corps of Engineers (EM 1110-2-1601) are also acceptable for facility design in the County of San Diego when appropriately applied.

Table 5-5 Standard Riprap Gradations

	Riprap Gradation								
Stone Weight	**2 Ton**	**1 Ton**	**½ Ton**	**¼ Ton [c]**	**375-lb [c]**	**Light [c]**	**N°. 1 Backing [c,d]**	**N°. 2 Backing**	**N°. 3 Backing**
4 Ton	0-5								
2 Ton	50-100	0-5							
1 Ton	95-100	50-100	0-5						
1000 lb		--	50-100	0-5					
700 lb					0-10				
500 lb		95-100	--	50-100	10-50	0-5			
200 lb			95-100	--	85-100	50-100	0-5		
75 lb				90-100	95-100	--	50-100	0-5	
25 lb				95-100		90-100	90-100	25-75	0-5
5 lb						95-100	--	90-100	25-75
2.2 lb							95-100		
1 lb									90-100

(a) Except for 2-ton rock, classification is based upon Caltrans Method B Placement, which allows dumping of the rock and spreading by mechanical equipment. Two-ton rock requires special placement, see Caltrans (2002) or APWA Southern California Greenbook for more information. (c) 375-lb Class Rock is from APWA Southern California Greenbook. (d) No. 1 Backing has same gradation as Facing Riprap.

For riprap installed on a channel bottom, rock gradation shall be based upon channel velocity as described in Table 5-3.

Caltrans' *Highway Design Manual* (Section 870) presents a simplified method for determining the minimum rock weight for the top (outside) layer of riprap bank protection. Equation 5-6 provides the minimum stone weight that will resist the forces of flowing water and remain stable on the slope of a river bank. The rock riprap shall extend up the side slopes to an elevation of the design water surface plus the calculated freeboard and superelevation. Figure 5-14 presents a nomograph for selection of minimum stone weight based on Equation 5-6.

$$W_{\min} = \frac{0.00002 V_A^{\,6} SG}{(SG-1)^3 \sin^3(\beta-\alpha)} \qquad (5\text{-}6)$$

where …

W_{MIN} = theoretical minimum rock weight (lbs);
V_A = bank velocity (ft/s), $V_A = KV_M$;
V_M = mean channel velocity (ft/s);
K = coefficient (K=0.67 for parallel flow; K=1.33 for impinging flow);
SG = specific gravity of rock riprap (no dimension);
β = 70 degrees (characteristic of randomly placed rubble); and
α = outside slope face angle with horizontal.

5.7.10 Riprap Thickness

Riprap layers must be thick enough to ensure mutual support and interlock between individual stones in each layer. The minimum riprap shall not be less than the diameter of the largest stone (d_{100}) or less than 1.5 times the median stone diameter ($1.5d_{50}$). Table 5-6 summarizes the recommended minimum layer thickness for standard Caltrans gradations. When riprap is placed

Table 5-6 Minimum Riprap Layer Thickness

Placement Method A	
Rock Gradation	**Minimum Layer Thickness (ft)**
8 ton	8.50
4 ton	6.80
2 ton	5.40
1 ton	4.30
½ ton	3.40
Placement Method B	
Rock Gradation	**Minimum Layer Thickness (ft)**
1 ton	5.40
½ ton	4.30
¼ ton	3.30
Light	2.50
Facing	1.80
Backing No. 1	1.80
Backing No. 2	1.25
Backing No. 3	0.75

Minimum layer thickness for Placement Method A is $1.50d_{50}$ and $1.875d_{50}$ for Placement Method B. These thickness calculations assume a specific weight of 165 lb/ft^3. The designer shall take care to apply a unit weight that is applicable to the type of riprap specified for the project, and adjust their calculations when necessary.

underwater, the riprap thickness shall be increased by at least 50 percent. The total thickness of a riprap installation is the sum of individual layer thicknesses (see Section 5.7.11).

5.7.11 Bedding Requirements

The long-term stability of riprap erosion protection is strongly influenced by proper bedding conditions. Properly designed bedding provides a buffer of intermediate-sized material between the channel bed and the riprap to prevent movement of soil particles through the voids in the riprap. Three types of bedding are in common use: generic single-layer granular bedding, multiple-layer granular bedding, and filter fabric.

Standard riprap installations include an outside layer, one or more inner layers, a backing layer, and filter fabric. Section 5.7.9 describes the determination of gradation of the outside rock layer. The composition of the inner layer(s), backing layer, and filter fabric are design to be progressively smaller to prevent migration of material through voids of the layers. Table 5-7 summarizes the appropriate layers for standard riprap installations. Alternate designs for riprap bedding are acceptable when accompanied by appropriate design calculations.

Filter fabric can provide adequate bedding for channel linings along uniform mild sloping channels where leaching forces are primarily perpendicular to the fabric. The design engineer shall use care in specifying using filter fabrics, and shall note appropriate construction methods on their plans and specifications. Some of the design considerations and limitations of filter fabric include:

Table 5-7 California Layered Rock Slope Protection

Outside Layer	Inner Layer	Backing	Fabric
8 ton	2 ton over ½ ton	1	B
8 ton	1 ton over ¼ ton	1 or 2	B
4 ton	½ ton	1	B
4 ton	1 ton over ¼ ton	1 or 2	B
2 ton	½ ton	1	B
2 ton	¼ ton	1 or 2	B
1 ton	LIGHT	NONE	B
1 ton	¼ ton	1 or 2	B
½ ton	NONE	1 or 2	B
¼ ton	NONE	1 or 2	A
Light	NONE	NONE	A
Facing (Backing)	NONE	NONE	A

Minimum permittivity for all filter fabrics is of 0.5 s^{-1}; see Caltrans Standard Specifications for exact definitions of Type A and Type B filter fabrics.

- Filter fabric shall only replace the bottom layer in a multi-layer granular bedding design.
- Due care shall be exercised during construction. Construction specifications shall prohibit direct dumping of riprap rock on the filter fabric, and granular bedding shall be placed on top of the filter fabric as a cushion whenever practicable.
- Due care shall be exercised when specifying filter fabric where seepage forces may run parallel with the fabric and cause piping along the bottom surface. In such situations, the fabric shall be folded vertically downward (similar to a cutoff wall) at regular intervals along the installation, particularly at the entrance and exit of the channel reach.
- Filter fabric shall be overlapped a minimum of 12 inches at roll edges with upstream fabric being placed on top of downstream fabric at the lap.

5.7.12 Toe Protection

Where only the channel sides are to be lined, additional riprap is needed to provide for long-term stability of the lining. In all cases, the toe of the riprap blanket shall extend a minimum of 3 feet below the proposed channel bed, and the thickness of the blanket below the proposed channel bed shall be increased to a minimum of three times the median stone size ($3d_{50}$). If the velocity in the channel exceeds the permissible velocity requirements of the soil comprising the channel bottom, a scour analysis shall be performed to determine if the toe requires additional protection. Riprap toe protection shall extend an additional 3 feet or two times median stone size ($2d_{50}$) below the calculated scour depth, if possible, whichever is deeper. If not possible, the use of launchable riprap toe may be allowed based on U.S. Army Corps of Engineers EM 1110-2-1601 or FHWA HEC-11.

Total scour depth is comprised of three components: (1) long-term aggradation and degradation of the river bed; (2) general scour due to contractions or other general scour phenomenon; and (3) local scour at a structure. An extensive discussion of geomorphic analysis procedures is beyond the scope of this Manual. Equation 5-7 (HEC-11, 2001) may be used to estimate the probable maximum depth of scour in straight channels, and channels having mild bends. Because the low point in the cross section may eventually move adjacent to the riprap (even if this is not the case in the existing condition), the scour depth (d_S) shall be measured from the lowest elevation in the cross section.

$$d_S = \begin{cases} 12 & d_{50} < 0.005\,ft \\ 6.5 d_{50}^{-0.11} & d_{50} > 0.005\,ft \end{cases} \qquad (5\text{-}7)$$

where …

d_S = estimated probable maximum depth of scour (ft); and

d_{50} = median diameter of bed material (ft)

The depth of scour predicted by Equation 5-7 must be added to the magnitude of predicted degradation and local scour (if any) to arrive at the total required toe depth.

Other scour equations, such as from Resource Consultants and Engineers, Inc. (1994) and U.S. Bureau of Reclamation (1984), are also acceptable for facility design when appropriately applied.

5.7.13 Channel Bend Protection

Riprap size shall be increased by one gradation through bends, unless calculations can demonstrate the stability of the straight-channel riprap gradation through the bend. For channels conveying 200 cfs or more, the minimum radius for a riprap-lined bend shall be 1.2 times the top width of design flow, and in no case be less than 50 feet. Riprap protection shall extend downstream from the end of the bend a distance that is equal to the length of the bend measured along the channel centerline.

5.7.14 Transition Protection

Turbulent eddies near rapid changes in channel geometry (e.g., transitions and bridges) amplify scour potential. At these locations, the riprap lining thickness shall be increased by one gradation, unless calculations can demonstrate stability of the smaller gradation through the transition section. Protection shall extend upstream from the transition entrance at least 5 feet and extend downstream from the transition exit at least 10 feet. Section 5.10 contains further discussion of transitions.

5.7.15 End Treatment and Special Conditions

Upstream and downstream ends of riprap-lined channels require particular attention from the design engineer. The end treatment can be accomplished by constructing a concrete cut-off wall, a riprap-filled trench, or thickening the riprap layer for a sufficient distance upstream and/or downstream. The Corps of Engineers' *Design of Flood Control Channels* (EM-1110-2-1603) provides specific guidance on end treatments for riprap channels. When failure of the riprap lining could seriously affect the health and safety of the public, the design engineer may consider constructing intermediate transverse cutoff walls at regular intervals to help preserve the integrity of the riprap channel lining.

5.7.16 Concrete-Grouted Riprap

Concrete-grouted riprap may be used when the calculated size of loose riprap is unreasonable or the installation of loose riprap is impractical. Grouted riprap requires less routine maintenance by reducing silt and trash accumulation and is particularly useful for lining low-flow channels and steep banks. Exposing the tops of individual stones and by cleaning excess grout from the projecting rock with a wet broom prior to curing provides the appropriate channel roughness.

Table 5-8 Concrete-Grouted Riprap Gradations

Rock Mass	Percentage Larger Than Class				
	½ ton	¼ ton	Light	Facing	Cobble
1 Ton	0-5	-	-	-	-
½ Ton (1000 lb)	50-100	0-5	-	-	-
¼ Ton (500 lb)	-	50-100	0-5	-	-
200 lb	90-100	-	50-100	0-5	-
75 lb	-	90-100	90-100	50-100	0-5
25 lb	-	-	-	90-100	95-100
Minimum Grout Penetration (inches)	18	14	10	8	6

The rock used for concrete-grouted riprap is slightly different from the standard gradation of rock riprap in that the smaller rock is reduced to allow greater penetration by the grout. Table 5-7 summarizes Caltrans rock riprap specifications for grouted applications. Grouting of rock gradations larger than 1 ton is typically not recommended.

Proper composition and placement of grouting is vital to the performance of the lining. Concrete used for rock grout shall meet all standards and shall be installed in accordance with procedures outlined in Greenbook Section 300-11 or Caltrans *Standard Specifications* Section 72-5. Table 5-8 provides the minimum penetration of concrete grout into the riprap matrix.

5.7.17 Riprap on Steep Longitudinal Slopes

The Federal Highway Administration (FHWA HEC-15, 1988) provides a graphically-based method to design rock riprap-lined channels on steep slopes (i.e., those designed for supercritical flow). This procedure shall also be used for rock riprap lined channels whose depth of flow is equal to or less than d_{50}.

5.7.17.1 Rock Size

Figure 5-12 (page 5-48) provides design curves that simplify riprap design for steep channels by median riprap size (d_{50}) for a given flow, channel slope, and channel width. The design curves were developed for channels with 3H:1V side slopes and bottom widths of 0 feet, 2 feet, 4 feet, 6 feet, and 8 feet. When the channel slope is not provided by one of the design curves, linear interpolation is used to determine the riprap size. This is done by extending a horizontal line at the given flow through the curves with slopes bracketing the design slope. A curve at the design slope is then estimated by visual interpolation. The design median stone size (d_{50}) is chosen at the point that the flow intercepts the estimated design curve. Linear interpolation can also be used to estimate the d_{50} size for bottom widths other than those supplied in the figures. For practical engineering purposes, the d_{50} size specified for the design shall be translated into standard riprap gradation.

5.7.17.2 Riprap Thickness for Steep Longitudinal Slopes

For riprap linings on steep slopes, the topmost riprap layer shall have a thickness of at least 1.25 times the median rock size ($1.25d_{50}$). The maximum resistance to the erosive forces of flowing water occurs when all rock is contained within the riprap layer thickness. Oversize rocks that protrude above the riprap layer reduce channel capacity and reduce riprap stability.

5.7.17.3 Riprap Placement on Steep Slopes

On steep slopes, riprap shall be placed using Caltrans Placement Method A; it shall never be placed by dropping it down the slope in a chute or pushing it down with a bulldozer.

5.7.17.4 Bedding Requirements on Steep Slopes

Either a granular bedding material or filter fabric may be used on steep slopes. Section 5.7.11 discusses bedding requirements.

5.8 DESIGN CRITERIA – CONCRETE-LINED CHANNELS

This Section presents minimum design criteria for concrete-lined channels. The design engineer is responsible for confirming that a channel design meets these criteria, the general open-channel criteria outlined in Section 5.3, and any special considerations for a particular design situation.

5.8.1 Longitudinal Channel Slope

Concrete-lined channels have the ability to accommodate supercritical flow conditions and thus can be constructed to almost any naturally occurring slope.

5.8.2 Roughness Coefficients

Appendix A (Table A-3 and Table A-5) provides Manning roughness coefficient for concrete-lined channels.

5.8.3 Channel Bottom Cross-Slope

The bottom of the concrete channel shall be constructed with a defined low flow channel or shall be adequately sloped to confine the low flows to the middle or one side of the channel cross-section as described in San Diego Regional Standard Drawings D-70 and D-71.

5.8.4 Bottom Width

There are no bottom width requirements for concrete-lined channels.

5.8.5 Freeboard

Concrete-lined channels conveying a 100-year flow less than or equal to 10 cfs shall have a minimum freeboard of 6 inches. Concrete-lined channels conveying more than 10 cfs shall meet the minimum freeboard requirements outlined in Section 5.3.7. There are no flow depth requirements for concrete-lined channels.

5.8.6 Concrete Lining Section

5.8.6.1 Thickness

In cases where a concrete channel is expected to carry a large amount of debris or abrasive sediment material at high velocities, it shall have a thickened lining section or other measures to provide sufficient design life for the facility. Concrete lining shall have a minimum thickness of 6 inches for flow velocities less than 30 fps and a minimum thickness of 8 inches for flow velocities of 30 fps and greater.

5.8.6.2 Concrete Detailing

Concrete channels shall be appropriately reinforced and jointed per San Diego Regional Standard Drawing No. D-70 or D-71 and SDD-100.

5.8.7 Safety

Concrete-lined channels shall provide appropriate safety measures as described in Section 5.3.9 of this Manual and San Diego Regional Standard Drawings No. D-70 or D-71 and SDD-100 to the satisfaction of the governing agency.

5.8.8 Special Consideration for Supercritical Flow

The design engineer shall give special consideration to supercritical flow and its potential effects when designing, specifying, and inspecting concrete channels. Care shall take taken to prevent excessive waves that may extend down the entire length of the channel (see Section 5.10.5.3). The design engineer shall consider the possibility of hydraulic jumps forming in the channel.

5.9 DESIGN CRITERIA – OTHER CHANNEL LININGS

Other channel linings include all channel linings that are not discussed in the previous sections. These include composite-lined channels, where two or more different lining materials are used. They also include gabions, soil cement linings, synthetic fabric and geotextile linings, preformed block linings, and reinforced soil linings. The wide range of composite combinations and other lining types does not allow a discussion of all potential linings in this Manual. For those linings not discussed in this Manual, supporting documentation will be required to support the use of the desired lining. Some of the items that should be addressed include:

- Structural integrity of the proposed lining.
- Interfacing between different linings.
- The maximum velocity and/or shear stress under which the lining will remain stable.
- Potential erosion and scour problems.
- Access for operations and maintenance.
- Long term durability of the product.
- Ease of repair of damaged section.
- Past case history (if available) of the lining system in similar applications.
- Potential groundwater mitigation issues (i.e. weepholes, underdrains, etc.)

These linings will be allowed on a case-by-case basis. The governing agency may reject the proposed lining system in the interests of operation, maintenance, and protecting the public safety.

5.10 DESIGN PROCEDURES – GENERAL OPEN-CHANNEL FLOW

An open channel is a conduit in which water flows with a free surface (non-pressurized flow). The hydraulics of an open channel can encompass many different flow conditions from steady state, uniform flow to unsteady, rapidly varying flow. The calculations for uniform and gradually varying flow are relatively straightforward and are based upon similar assumptions (i.e., parallel streamlines). In contrast, rapidly varying flow computations (e.g., hydraulic jumps and flow over spillways) can be very complex, and the solutions are generally empirical in nature. This Section

presents the basic equations and computational procedures for uniform, gradually varying and rapidly varying flow.

5.10.1 Uniform Flow Computation

Open-channel flow is uniform if the depth of flow is the same at every section of the channel. For a given channel geometry, roughness, discharge and slope, there is only one possible depth for maintaining uniform flow. This depth is referred to as the "normal depth." For uniform flow within a prismatic channel (i.e., uniform cross section), the water surface will be parallel to the channel bottom. While uniform flow rarely occurs in nature and is difficult to achieve in a laboratory, a uniform-flow approximation is generally adequate for planning and design purposes.

The computation of uniform flow and normal depth shall be based upon the Manning or Uniform Flow Equation:

$$Q = \frac{1.49}{n} A^{5/3} P^{-2/3} \sqrt{S} = \frac{1.49}{n} A R^{2/3} \sqrt{S} \qquad (5\text{-}8)$$

where ...

Q = flow rate (ft^3/s);
n = Manning roughness coefficient;
A = area (ft^2);
P = wetted perimeter (ft);
R = hydraulic radius, $R = A/P$ (ft); and
S = slope of the energy grade line (ft/ft).

For prismatic channels, the energy grade line (EGL), hydraulic grade line (HGL), and the bottom can be assumed parallel for uniform, normal depth flow conditions.

The variables dependant on channel cross-section geometry (i.e., area and hydraulic radius) can be lumped together as the *conveyance* (K) of the channel. This simplifies the Uniform Flow Equation to the following expression:

$$Q = K\sqrt{S} \qquad (5\text{-}9)$$

Figure 5-16 (page 5-53) presents equations for calculating many of the parameters required for hydraulic analysis of different channel sections.

Appendix A provides a list of Manning roughness coefficient values for many types of conditions that may occur in the San Diego Region. The Uniform Flow Equation and its constituent parameters are readily computed using hand-held calculators and personal computers.

5.10.2 Gradually Varying Flow

The most common occurrence of gradually varying flow in storm drainage is the backwater created by culverts, storm drain inlets, or channel constrictions. For these conditions, the flow depth will be greater than normal depth in the channel, and the water surface profile (a.k.a. "backwater curve") is computed using either the direct-step or standard step method. Many computer programs are available for the calculation of gradually-varied flow. The most general and widely used programs are the U.S. Army Corps of Engineers' *HEC-2 Water Surface Profiles* and *HEC-RAS River Analysis System* and the Los Angeles County Flood Control District's *Water Surface Pressure Gradient (WSPG)*. The County accepts analyses using software from the appropriate FEMA approved list. In addition, any use of HEC-RAS should conform to the HEC-RAS reference/guidance manual.

Direct-Step Method

The Direct-Step Method is best suited to the analysis of open prismatic channels. Water surface profiles in simple prismatic channels can be computed manually. Chow (1959) presents the basic method for applying the direct-step analysis. The Direct-Step Method is also available in many hand-held and personal computer programs.

Standard-Step Method

The Standard-Step Method is required for the analysis of irregular or non-uniform cross-sections. Because the Standard Step Method involves a more tedious iterative process, this Manual recommends that design engineers use computer programs such as HEC-RAS to accomplish these calculations.

5.10.3 Rapidly Varying Flow

Rapidly varying flow is characterized by very pronounced curvature of the water surface profile. The change in water surface profile may become so abrupt to result in a state of high turbulence. Calculation methods for gradually-varying flow (e.g., direct-step and standard-step methods) do not apply for rapidly-varying flow. There are mathematical solutions to some specific cases of rapidly varying flow, but the solutions to most rapidly varying flow problems rely on empirical data.

The most common occurrence of rapidly varying flow in storm drainage applications involves weirs, orifices, hydraulic jumps, non-prismatic channel sections (transitions, culverts and bridges), and non-linear channel alignments (bends). Each of these flow conditions require detailed calculations to properly identify the flow capacities and depths of flow in the given section. The design engineer must be cognizant of the design requirements for rapidly varying flow conditions and shall include all necessary calculations as part of the design submittal documents. This Manual refers the design engineer to the hydraulic references in Section 5.13 for the proper calculation methods to use in the design of drainage facilities with rapidly varying flow conditions.

5.10.4 Design Procedure – Critical Flow

The critical state of uniform flow through a channel is characterized by several important conditions regarding the relationship between the flow, specific energy, and slope of a particular hydraulic cross-section (Figure 5-8. Critical state is characterized by the following conditions:

1. The specific energy ($E=y+v^2/2g$) is a minimum for a given discharge (Q).
2. The discharge (Q) is a maximum for a given specific energy (E).
3. The specific force is a minimum for a given discharge (Q).
4. The velocity head ($v^2/2g$) is equal to half the hydraulic depth ($D/2$) in a channel of small slope.
5. The Froude Number is equal to $F_R=1.0$.

Typically, channels should not be designed to flow at or near critical state ($0.80<F_R<1.20$, see Section 5.3.6). If the critical state of uniform flow exists throughout an entire reach, the channel flow is critical and the channel slope is at *critical slope* (S_c). A slope less than S_c will cause subcritical flow. A slope greater than S_c will cause supercritical flow.

The criteria of minimum specific energy for critical flow results in the definition of the Froude Number (F_R) as follows:

$$FR = \frac{v}{\sqrt{gD}} \qquad (5\text{-}10)$$

where ...

F_R	=	Froude Number (dimensionless);
v	=	velocity (ft/s);
g	=	gravitational acceleration (ft/s^2);
A	=	channel flow area (ft^2);
D	=	hydraulic depth, $D=A/T$ (ft); and
T	=	top width of flow area (ft).

The critical depth in a given trapezoidal channel section with a known flow rate can be determined using the following method:

Step 1. Compute the section factor for critical flow computation (Z).

$$Z_C = A\sqrt{D} = \frac{Q}{\sqrt{g}} \qquad (5\text{-}11)$$

where ...

Z_C	=	section factor for critical flow computation;
A	=	channel flow area (ft^2);
D	=	hydraulic depth, $D=A/T$ (ft);
T	=	top width of flow area (ft).
Q	=	flow rate (ft^3/s); and
g	=	gravitational acceleration (32.2 ft/s^2)

Step 2. Determine the critical depth in the channel (d_c) from Figure 5-18, using appropriate values for the section factor for critical flow computation (Z_C), the channel bottom width, (b), and the channel side slope (z).

For other prismatic channel shapes, Equation 5-11 determines the critical depth using with the section factors provided in Chow (1959).

Design Procedures – Subcritical Flow

All open channels shall be designed with the limits as stated in Section 5.3 through Section 5.9. The following design procedures shall be used when the design runoff in the channel is flowing in a subcritical condition (F_R <1.0).

5.10.4.1 Transitions – Subcritical Flow

Subcritical transitions occur when transitioning one subcritical channel section to another subcritical channel section (expansion or contraction), or when a subcritical channel section is steepened to create a super critical flow condition downstream (e.g., a sloping spillway entrance). Figure 5-13 (page 5-50) presents several typical subcritical transition sections. The warped transition section, although most efficient, should only be used in extreme cases where minimum loss of energy is required since the section is very difficult and costly to construct. Conversely, the square-ended transition should only be used when either a straight-line transition or a cylinder-quadrant transition cannot be used due to topographic constraints or utility conflicts.

Subcritical Transitions – Contractions

The energy loss created by a contracting section may be calculated using the following equation:

$$H_t = K_{tc}\left(\frac{V_2^2}{2g} - \frac{V_1^2}{2g}\right) \qquad (5\text{-}12)$$

where ...

H_t = energy loss (ft);
K_{tc} = contraction transition coefficient;
v_1 = upstream velocity (ft/s);
v_2 = downstream velocity (ft/s); and
g = gravitational acceleration (32.2 ft/s^2).

Figure 5-13 (page 5-50) presents contraction loss coefficient (K_{tc}) values for the typical open-channel transition sections.

Subcritical Transitions– Expansions

The energy loss created by an expanding transition section may be calculated using the following equation:

$$H_t = K_{te}\left(\frac{V_1^2}{2g} - \frac{V_2^2}{2g}\right) \qquad (5\text{-}13)$$

Figure 5-13 (page 5-50) presents expansion loss coefficients (K_{te}) values for typical open-channel transition sections.

Subcritical Transition Length

The length of the transition section shall be long enough to keep the streamlines smooth and nearly parallel throughout the expanding (contracting) section. Experimental data and performance of existing structures have been used to estimate the minimum transition length necessary to maintain the stated flow conditions. Based on this information, the minimum length of the transition section shall be as follows:

$$L_t \geq 0.5 L_c(\Delta T_w) \qquad (5\text{-}14)$$

where ...

L_t = minimum transition length (feet);
L_c = length coefficient (dimensionless); and
ΔT_w = difference in the top width of the normal water surface upstream and downstream of the transition (feet).

Table 5-9 summarizes the transition length coefficients for subcritical flow conditions. These transition length guidelines are not applicable to cylinder-quadrant or square-ended transitions. For flow approach velocities of 12 fps or less, the transition length coefficient (L_c) shall be 4.5. This represents a 4.5L:1W expansion or contraction, or about a 12.5 degree divergence from the channel centerline. For flow approach velocities of more than 12 ft/sec, the transition length coefficient (L_c) shall be 10. This represents a 10L:1W expansion or contraction, or about a 5.75 degree divergence from the channel centerline.

Table 5-9 Transition Length Coefficients for Subcritical Open Channels.

Flow Approach Velocity (v) (ft/s)	Transition Length Coefficient (L_c)
≤ 12	4.5
> 12	10

5.10.5 Design Procedures – Supercritical Flow

All supercritical channels shall be designed within the limits as stated in Section 5.3 through Section 5.9. The following design procedures shall be used when channels are designed to flow in a supercritical condition (F_R >1.0).

Supercritical flow can become unstable in response to relatively minor disturbances to the channel cross section; even small obstructions can sometimes cause a hydraulic jump. Good design practice is to test supercritical flow stability during events smaller than the design flow by evaluating flows of specific more frequent storm events (e.g., 10-year, 2-year, etc.), or testing successive fractions (e.g., one-half, one-quarter, and further if necessary) of the design flow. However, only calculations for the full design flow are required to be submitted for review.

5.10.5.1 Transitions – Supercritical Flow

The design of supercritical flow transitions is more complicated than subcritical transition design due to the potential damaging effects of the oblique jump created by the transition. The oblique jump results in cross waves and higher flow depths that can cause damage if not properly accounted for in the design. Supercritical transitions can be avoided by designing a hydraulic jump, which must also be carefully designed to assure the jump will remain where the jump is designed to occur. Hydraulic jumps shall be designed to take place only within hardened parts of the channel, such as energy dissipation or drop structures, and not within erodible portions of the channel. Chapter 7 discusses energy dissipation devices.

Supercritical Transitions – Contractions

Figure 5-9 presents an example of a supercritical contracting transition, with upstream flow contracted from width b_1 to b_3 and a wall diffraction angle of θ. The oblique jump occurs at the points A and B where the diffraction angles start. Wave fronts generated by the oblique jumps on both sides propagate toward the centerline with a wave angle β1. Since the flow pattern is symmetric, the centerline acts as if there was a solid wall that causes a subsequent oblique jump and generates a backward wave front toward the wall with another angle β2. These continuous oblique jumps result in turbulent fluctuations in the water surface.

To minimize the turbulence, the first two wave fronts are designed to meet at the center and then end at the exit of the contraction. Using the contraction geometry, the length of the transition shall be as follows:

$$L_T = \frac{b_1 - b_3}{2\tan\theta} \qquad (5\text{-}15)$$

where ...

L_t = transition length (ft);
b_1 = upstream top width of flow (ft);
b_3 = downstream top width of flow (ft); and
θ = wall angle as related to the channel centerline (degrees).

Using the continuity principle,

$$\frac{b_1}{b_3} = \left(\frac{y_3}{y_1}\right)^{3/2} \left(\frac{FR_3}{FR_1}\right) \tag{5-16}$$

where ...

y_1 = upstream depth of flow (ft);
y_3 = downstream depth of flow (ft);
FR_1 = upstream Froude Number; and
FR_3 = downstream Froude Number.

Also, by the continuity and momentum principals, the following relationship between the Froude Number, wave angle, and wall angle is:

$$\tan\theta = \frac{\tan\beta_1\left[\left(1+8FR_1^2\sin^2\beta_1\right)^{1/2}-3\right]}{2\tan^2\beta_1+\left(1+8FR_1^2\sin^2\beta_1\right)^{1/2}-1} \tag{5-17}$$

where ...

β_1 = Initial wave angle (degrees).

By trial and error, this design procedure can be used to determine the transition length and wall angle. Figure 5-15 offers a faster solution than trial and error using Equation 5-16 and Equation 5-17 (above). Figure 5-15 can also be used to determine the wave angle (β), or may be used with the equations to determine the required downstream depth or width parameter if a certain transition length is desired or required.

To minimize the length of the transition section, the ratio of downstream and upstream flow depths should generally be greater than two and less than three ($2.0<y_3/y_1<3.0$). The downstream Froude Number should generally be greater than 1.7 ($FR_3>1.7$) to help avoid undulating hydraulic jumps downstream. For further discussion on oblique jumps and supercritical contractions, refer to Chow (1959).

Supercritical Transitions – Expansions

A properly designed expansion transition expands the flow boundaries at approximately the same rate as the natural flow expansion. Based on experimental and analytical data results, the minimum length of a supercritical expansion shall be as follows:

$$L_t \geq 1.5\left(\Delta W\right)FR_1 \tag{5-18}$$

where ...

L_t = Minimum transition length (feet);
ΔW = Difference in the top width of the normal water surface upstream and downstream of the transition; and
FR_1 = Upstream Froude Number.

5.10.5.2 Transition Curves

A transition curves may be used to reduce the required amount of freeboard or radius of curvature in a rectangular channel. The length of the transition curve measured along the channel centerline shall be determined as follows:

$$L_c = 2D = 0.32\frac{WV}{\sqrt{y}} \qquad (5\text{-}19)$$

where ...

L_c = length of transition curve (ft);
D = distance from the start of curve to point of first maximum superelevation (ft). Typically $D=3L_W$; see description of how to apply superelevation allowance in Section 5.3.7;
W = top width of design water surface (ft);
V = mean design velocity (ft/s); and
y = depth of design flow (ft).

The radius of the transition curves should be twice the radius of the main bend. Transition curves should be located both upstream and downstream of the main bend.

5.10.5.3 Slug Flow and Roll Waves

Steep channels with significantly rapid flows (F_R >2.0) are prone to developing pulsating flow profiles, often called slug flows or roll waves. These standing waves can cause flow to exceed freeboard limits and possible damage to the channel lining. The design engineer may resolve pulsating flow issues either by adjusting the channel slope to prevent the development of these waves or providing additional freeboard to account for the height of the standing waves.

Theoretically, slug flow will not occur when the Froude Number is less than two (F_R <2.0). To avoid slug flow when the Froude Number is greater than 2.0, the channel slope shall be as follows:

$$S \le \frac{12}{R_E} \qquad (5\text{-}20)$$

where ...

S = channel slope (ft/ft);
R_E = Reynolds Number, $R_E = \frac{uR}{\nu}$ (no dimensions);
u = mean design velocity (ft/s);
R = hydraulic radius (feet); and
ν = kinematic viscosity of water (ft^2/s).

More detailed discussion of pulsating flow is beyond the scope of this Manual. Several references, including Chow (1959) and Clark County (2000) provide further discussion of this topic. The Los Angeles County Flood Control District (1982) has developed nomographs for determining the appropriate freeboard allowance for roll wave height based on empirical research at the California Institute of Technology (Brock, 1967).

5.10.6 Design Procedures – Superelevation

Superelevation is the transverse rise in water surface that occurs around a channel bend, measured between the theoretical water surface at the centerline of a channel and the water surface elevation on the outside of the bend. Superelevation in bends shall be estimated from the following equation:

Table 5-10 Superelevation Curvature Coefficients

Flow Type	Cross Section	Type of Curve	Curvature C
Subcritical	Rectangular	No Transition	0.5
Subcritical	Trapezoidal	No Transition	0.5
Supercritical	Rectangular	No Transition	1.0
Supercritical	Trapezoidal	No Transition	1.0
Supercritical	Rectangular	with Spiral Transition	0.5
Supercritical	Trapezoidal	with Spiral Transition	1.0
Supercritical	Rectangular	with Spiral Banked Transition	0.5

$$\Delta y = \frac{CV^2 T_W}{\mathrm{rg}} \qquad (5\text{-}21)$$

where ...

Δy = rise in water surface between design water surface at centerline of channel and outside water surface elevation (ft);
C = curvature coefficient (see Table 5-10);
r = radius of curvature at centerline of channel (ft);
T_W = top width at the design water surface at channel centerline (ft);
V = mean channel velocity (ft/s); and
g = gravitational acceleration (ft/s^2).

The curvature coefficient (C) shall be 0.5 for subcritical flow conditions. For supercritical flow conditions, the curvature coefficient shall be 1.0 for all trapezoidal channels and for rectangular channels without transition curves, and 0.5 for rectangular channels with transition curves. Table 5-10provides superelevation curvature coefficients for various flow regimes, cross-section shapes, and types of curves.

Bends in supercritical channels create cross-waves and superelevated flow in the bend section as well as further downstream from the bend. In order to minimize these disturbances, best design practice is to design the channel radius of curvature to limit the superelevation of the water surface to 2 feet or less. This can be accomplished by modifying Equation 5-21 to determine the allowable radius of curvature of a channel for a given superelevation value.

5.11 DESIGN PROCEDURES – ALLUVIAL (MOVABLE-BED) CHANNELS

"Alluvial-bed channels" in the context of this Manual refers to channels with movable beds that operate in quasi-equilibrium with respect to longitudinal slope and cross-section. This Section outlines the basic procedures and concepts for the design of alluvial (movable-bed) channels. The procedures presented here are useful for small to moderate sized alluvial bed channels. Major channels warrant more thorough sediment transport analysis, usually involving computer modeling. Sediment transport analysis is not required for small ditches and swales. The design engineer is encouraged to explore the references provided in Section 5.13 of this Manual for more comprehensive discussions of alluvial-bed channel design.

The procedures outlined in this Manual shall not be used for the design of channels on active alluvial fan formations. In these instances the NFIP regulations should be followed.

5.11.1 Basic Design Procedure

The basic alluvial channel system consists of a composite cross-section with a low-flow channel and a flood-flow channel. The low flow channel section shall be designed to handle the channel forming discharge flow with no freeboard. In addition, the alluvial channel section design shall be checked for the 100-year flows to ensure that the system will be stable during and after major storm events. The following summarizes the recommended general alluvial channel design procedures:

Step 1. Identify the contributing watershed limits and determine the channel-forming discharge and the 100-year design storm discharge rates for the design reach.

Step 2. Obtain pertinent information, including: channel geometry, channel slope; channel resistance; and sediment size distribution (based on geotechnical analysis) for the upstream sediment supply reach (see Section 5.11.5). Calculate the hydraulic conditions based on the design discharges.

Step 3. After determining the applicability of the sediment transport equation (see Section 5.11.4), calculate the sediment supply from the upstream channel reach for the channel forming discharge. The calculated sediment supply is per unit width; the total sediment transport rate is obtained by multiplying the rate per unit width by the top width of the natural channel section.

Step 4. Determine the equilibrium slope (see Section 5.11.2) for the channel design reach under consideration using the upstream sediment supply rate. This usually requires a trial and error procedure. When the computed transport rate is equal to the upstream supply rate, the equilibrium slope for the design reach has been found.

Step 5. Based on the hydraulic conditions at equilibrium slope, estimate the largest particle size moving for armoring control check (see Section 5.11.6). Also, check the applicability of the equations used for the calculation by comparing hydraulic parameters with the range of parameters for the equations.

Step 6. If needed, design channel drop structures (see Section 5.12) and other necessary drainage structures to maintain the computed equilibrium channel slope for the design reach.

Step 7. Check the stability (horizontal and vertical) of the channel design reach (channel and overbanks) for the design storm events and provide channel protection measures where needed (see Section 5.7 and elsewhere).

5.11.2 Equilibrium Slope

The channel energy gradient slopes largely affect the resulting flow velocities, tractive forces, and sediment transport capacities of a given channel reach. A channel reach is considered to be at an equilibrium slope when the incoming sediment load (sediment supply) is equal to the outgoing sediment load (sediment transport). If the sediment transport capacity of a given channel reach is greater than sediment supply from the upstream reach, the channel reach will experience degradation (erosion and scour) because of flood flows picking up additional sediment particles from the channel bed and banks. If the sediment supply is greater than the sediment transport capacity, then the channel reach will experience aggradation as the flows drop off excess sediment particles. When a channel reach is in an equilibrium state, no substantial channel aggradation or degradation is expected. The equilibrium channel slope is typically determined based on the channel forming discharge rate (see Section).

5.11.3 Composite Manning Roughness Coefficient

Appendix A provides recommended values for the Manning roughness coefficient for various channel and overbank types and conditions. The composite Manning roughness coefficient is determined by the following equation (Chow, 1959):

$$n_c = \frac{\left(n_0^2 P_0 + n_w^2 P_w\right)^{0.5}}{\left(P_o + P_w\right)} \qquad (5\text{-}22)$$

where ...

n_c = Manning roughness coefficient for the composite channel;
n_o = Manning roughness coefficient for areas above the wetland area;
n_w = Manning roughness coefficient for the wetland area;
P_o = wetland perimeter of channel cross-section above the wetland area (feet)
P_w = wetland perimeter of the wetland channel bottom (feet).

5.11.4 Sediment Supply and Transport Analysis

A long reach of channel may be subjected to a general degradation or aggradation of the bed level over a long period of time. Anticipating degradation and aggradation accurately is important for determining design considerations such as adequate foundation depths.

Sediment routing analysis using a sediment routing model is the best method for estimating the general degradation and aggradation of a stream on a reach-by-reach basis. Examples of sediment routing computer models include HEC-RAS version 4.0 or later, the U.S. Army Corps of Engineers' *HEC-6 Scour and Deposition in Rivers and Reservoirs*, and proprietary models such as *QUASED* by Simons, Li & Associates; *FLUVIAL-12* by Howard Chang; *MIKE-21C* by the Danish Hydraulic Institute; and *ONETWOD* by Y. H. Chen (FERC, 1992). However, less elaborate methods using rigid bed hydraulic and sediment transport calculations may be used to estimate the relative balance between sediment transport capacity and sediment supply between adjacent reaches. The design engineer shall determine the level of sediment transport analysis required for a particular alluvial channel design project in consultation with the governing agency.

5.11.5 Upstream Sediment Supply

A major controlling factor when assessing channel response is the upstream sediment supply. Whether a channel degrades or aggrades depends on the balance between the incoming sediment supply and the transport capacity of the reach. This is especially true for channels where armoring does not occur.

Incoming sediment supply is very difficult to estimate. One practical way to estimate the incoming sediment supply is to select a supply reach. The supply reach must be close to its equilibrium condition. Usually, the sediment supply is determined from the following: (1) the sediment transport capacity at an upstream reach, using an appropriate maximum permissible velocity and estimated flow depth; (2) a natural channel reach upstream of the design reach that has not and will not be disturbed by human activities; or (3) an upstream channelized reach which has been in existence for many years and has not experienced a recent change in profile or cross section.

It is important to understand that the sediment supply system may be subjected to conditions that can drastically alter the sediment supply, such as urbanization and the construction of debris basins and detention ponds. In the long term, urbanization can reduce exposure to erosion and

reduce sediment supply. Likewise, detention basins and debris basins will trap and prevent sediment from entering the stream system.

5.11.6 Erodible Sediment Size

The sediment transport equations presented here are based on the assumption that all the sediment sizes present in the channel bed can be moved by the flow. If this is not true, armoring will take place, and the equations will not be applicable. Similarly, these equations do not apply to conditions when the bed material is cohesive. The bed shear stress is given by two closely-related equations:

$$\tau_0 = \gamma RS \qquad (5\text{-}23)$$

$$\tau_0 = (1/8)\rho f_0 V^2 \qquad (5\text{-}24)$$

where …

τ_0 = shear stress (lb/ft^2);
γ = specific weight of water (62.4 lb/ft^3);
R = hydraulic radius (ft);
S = energy slope (ft/ft);
ρ = density of water (lb/ft^3);
f_0 = Darcy-Weisbach friction factor; and
V = mean flow velocity (ft/s).

Equation 5-23 is usually the simplest to utilize. The diameter of the largest particle moving is then:

$$D = \tau_0 /(0.047(S_S - 1)\gamma) \qquad (5\text{-}25)$$

where …

D = diameter of the sediment (ft);
S_S = specific gravity of sediment;
0.047 = recommended value of Shields' parameter.

5.11.7 Other Channel Scour Considerations

Additional channel erosion and scour conditions such as anti-dune trough depth, channel bend scour, channel contraction scour, and local scour at abutments, piers, etc. might have significant design implications for an alluvial channel. FHWA HEC-18, "Evaluating Scour at Bridges" and several other references listed in Section 5.13 offer more detailed discussion of these considerations.

5.12 DESIGN PROCEDURES – CHANNEL GRADE CONTROL AND DROP STRUCTURES

The design of stable open channels (rigid and alluvial) often requires the use of channel drop and/or grade control structures to control the longitudinal slope of channels to keep design velocities within the acceptable limits.

Channel grade control and drop structures presented in this Section shall only be used when the inflow channel condition is subcritical (F_R <1.0). If the inflow channel condition is super critical (F_R >1.0), then an *energy dissipator* or *stilling basin* shall be used instead (see Chapter 8).

Channel grade control and drop structures may be constructed of many types of materials, including concrete, riprap, grouted riprap, gabions, sheet piles, or other materials. The selection of material and type of grade control depends in part on their hydraulic limitations (see Table 5-11for typical hydraulic limitations), aesthetic considerations, and other site conditions such as presence of abrasive sediment bed load. This Section presents minimum design criteria and charts to aid in the design of sloping grouted boulder grade control structure. Section 5.13 provides several references for channel drop and energy dissipation design with the detailed information available on other types of structures.

The effectiveness of grade control and drop structures is dependent on many factors including flow rates, tailwater depths, and type of structures. The structures also must function over a wide range of flow rates. Therefore, it is important to confirm performance during events smaller than the maximum design flow. This may be accomplished by evaluating flows of specific more frequent storm events (e.g., 10-year, 2-year, etc.), or testing successive fractions (e.g., one-half, one-quarter, and further if necessary) of the design flow. However, only calculations for the full design flow are required to be submitted for review.

Table 5-11 Channel Drop Structures

Description	Upstream Flow Regime	Max. Drop Height	Max. Unit Discharge	Max. Inflow Velocity	Upstream Cross-Section
		(ft)	(cfs/ft)	(ft/s)	
Sloping Riprap Drop Structure	Subcritical	10	35	7	Trapezoidal
Vertical Riprap Drop Structure	Subcritical	3	35	7	Trapezoidal
Straight Drop Structure	Subcritical	8	n/a	n/a	Rectangular
USBR Type IX Baffled Apron	Subcritical	n/a	60	n/a	Rectangular

5.12.1 Sloping Grouted Boulder Drop Structure

Sloping grouted boulder drop structures have gained popularity due to their design aesthetic and successful field application. Figure 5-10 illustrates a typical sloping grouted boulder drop structure. The sloping grouted boulder drop is designed to operate as a hydraulic jump dissipater, although some energy loss is incurred due to the roughness of the grouted rock slope. The quality of rock used and proper grouting procedure are very important to the structural integrity. The main design objectives are to maintain structural integrity and to contain erosive turbulence within the downstream basin.

Grouted boulder drops must be constructed of uniform size boulders grouted in place through the approach, sloping face, basin, and exit areas of the drop. Figure 5-19 illustrates the general configuration of the sloping grouted boulder drop structure, and Table 5-12 and Table 5-13summarize the design parameters for the drop structure.

5.12.1.1 Approach Apron

The grouted boulder drop structure has a 10-ft trapezoidal riprap approach section immediately upstream of its crest. The approach apron is provided to protect against the increasing velocities and turbulence that result as the water approaches the sloping portion of the drop structure. The width of the approach apron and the side slopes should match the upstream channel, and the

height of grouted boulder channel sides shall be equal to the depth of water in the upstream channel plus the required freeboard as described in Section 5.3.7.

A concrete cutoff wall shall be placed at the top of the slope and on the upstream side of the approach apron to reduce or eliminate seepage and piping through the structure (Section B-B, Figure 5-19). The depth of the cutoff wall shall be at least 1 ft, and extend the full depth of the riprap layer. Depending on the soil type and hydraulic forces acting on the drop structure, the cutoff wall may need to be deeper to lengthen the seepage flow path.

5.12.1.2 Drop

The slope of the drop structure shall not be steeper than 4H:1V (Table 5-12). Slopes flatter than 4H:1V usually increase expense, but some improvement in appearance may be gained. The side slopes and bottom width of the drop shall be the same as the upstream channel. The grouted boulders shall extend up the side slopes a height of the tailwater depth plus freeboard as projected from the downstream channel or the critical depth plus 1 foot, whichever is greater.

Table 5-12 Sloping Riprap Channel Drop Design Chart – Part 1

Maximum Unit Discharge	Maximum Allowable Chute Slope (S_o)		Downstream Apron Length (L_b)
(cfs/ft)	¼ Ton Riprap	Grouted Riprap	(ft)
0-15	7H:1V	4H:1V	15
15-20	8H:1V	5H:1V	20
20-25	10H:1V	6H:1V	20
25-30	12H:1V	7H:1V	25
30-35	13H:1V	8H:1V	25
> 35	Structure Not Allowed for Unit Discharges >35 cfs/ft		
Incoming Velocity	**Riprap Apron Thickness (D_r)**		
	(ft)	(ft)	
V ≤ 5 ft/s	1.75	2.6	
V > 5 ft/s	2.0	3.0	
	Riprap Apron Thickness at Crest (D_{rw})		
	(ft)	(ft)	
	$1.5D_r$	$1.25D_r$	

5.12.1.3 Exit Apron

The exit apron is necessary to minimize any erosion that may occur due to secondary currents. The bottom width and side slopes of the exit apron shall be the same as the downstream channel. The apron sides shall extend to a height equal to the tailwater depth plus the required freeboard. Table 5-12provides the length of the exit apron (L_b).

5.12.1.4 Drainage

Drop structure shall include appropriate structural analysis and analysis of geotechnical factors such as seepage. Weep drains should be considered for seepage and uplift control. A continuous manifold is preferred over a "point" system for weep drainage of a drop structure, as it provides more complete interception of subsurface drainage. Weep systems requires special attention during construction. The boulders can crush the pipes and alignment of the pipes between the

boulders can be difficult. Flexible outlet pipes shall be used to allow alignment of the pipes around the boulders when necessary.

5.12.2 Drop Structures Used for Grade Control

The natural topographic slope of a project reach can often be too steep for a stable alluvial channel or particular engineered channel design. In these cases, the grouted sloping boulder drop structure (Section 5.12.1) and other drop structure designs can used as grade control structures to limit longitudinal slope of a channel.

Table 5-13 Sloping Riprap Channel Drop Design Chart – Part 2

Channel Bottom Width (b)	Crest Wall Elevation (P)		
	$y_N \leq 4$ ft	$y_N > 4$ ft	
		$v_N \leq 5$ ft/s	$v_N > 5$ ft/s
(ft)	(ft)	(ft)	(ft)
≤ 20	0.1ft	0.2	0.2
20 – 60	0.1	0.4	0.2
60 – 100	0.1	0.5	0.3
> 100	0.2	0.5	0.3

The basic design procedure for grade control structures starts with the determination of a stable slope and configuration for the channel. For alluvial channels, the analysis should include discharges from the full floodplain flow to the dominant discharge. Section 5.10.6 explains the dominant or channel-forming discharge, and it is more fully explained in sediment transport texts such as Simons, Li and Associates (1982). The spacing of the grade control structures is based on the difference in slope between the natural topographic and projected stable slope.

5.12.3 Grade Control Sills Used for Grade Control

Control sills are another type of grade control structure that can be used to stabilize channels. Grade control sills can be constructed of concrete, or designed using materials such as gabion baskets or sheet piles. It is important that the sill extend below anticipated scour depths and far enough into adjacent channel banks to prevent flanking during high flow events. The top of the grade control sill should conform to the transverse channel cross-section profile when practicable.

The basic design procedure for grade control sills is to (1) determine a stable slope (Section 5.11.2), and then (2) determine spacing of the sills based on the difference in slope between the natural and projected stable slope. It is critical to take care to limit the vertical drop below grade control sills and provide adequate scour protection for the structure.

5.13 REFERENCES

A. J. Peterka. (1978). Hydraulic Design of Stilling Basins and Energy Dissipators, U. S. Department of the Interior, Bureau of Reclamation EM 25. Denver, Colorado.

Brater and King. (1976). *Handbook of Hydraulics.* McGraw-Hill Book Co., 6th Ed.

Brock, Richard R. (July 1967). Development of Roll Waves in Open Channels. California Institute of Technology Report No. KH-R-16.

California Department of Transportation (Caltrans). (2010). Standard Specifications for Construction of Local Streets and Roads. Sacramento, CA.

California Department of Transportation (Caltrans). (May 2012). Highway Design Manual. Sacramento, CA.

California Department of Transportation (Caltrans). (October 2000). California Bank and Shore Rock Slope Protection Design. FHWA-CA-TL-95-10/Caltrans Study No. 990TL03. Sacramento, CA.

Chang, Howard. (1992). Fluvial Processes in River Engineering. Reprint ed. Krieger Publishing: Malabar, Florida.

Chow, V. T. (1959). *Open Channel Hydraulics.* McGraw-Hill.

Clark County Regional Flood Control District. (August 12, 1999). *Hydrologic Criteria and Drainage Design Manual.*

Lane, E. W. (1957.) A study of the shape of channels formed by natural streams flossing in erodible material: M.R.D. Sediment Series No. 9, US. Army Engineer Division, Missouri River, Corps of Engineers, Omaha, NE.

Los Angeles County Flood Control District. (April 1979). User Manual, Water Surface Pressure Gradient Hydraulic Analysis Computer Program F0515P. Los Angeles, California.

Los Angeles County Flood Control District. (March 1982). Hydraulic Design Manual. Los Angeles, California.

Public Works Standards, Inc. (2003). Standard Specifications for Public Works Construction, 13th Edition. BNi Publications: Anaheim, CA.

Resource Consultants and Engineers, Inc. (1994). AMAFCA Sediment and Erosion Design Guide. RCE Ref. No. 90-5560.

Ritter, Dale F. (1986). Process Geomorphology. Wm C. Brown Publishers, Dubuque, Iowa.

Rosgen, D. (1996). *Applied River Morphology.*

Simons, Li & Associates. (1982). *Engineering Analysis of Fluvial Systems*. Simons, Li & Associates, Fort Collins, Colorado.

The Federal Interagency Stream Restoration Working Group (FISRWG). (2001). Stream Corridor Restoration: Principles, Processes, and Practices.U. S. Department of Transportation, Federal Highway Administration. (May 2001.) Evaluating Scour at Bridges. Hydraulic Engineering Circular No. 18 (HEC-18). FHWA NHI 01-001. Washington, D. C.

U.S. Army Corps of Engineers. (1993). *HEC-6 Scour and Deposition in Rivers and Reservoirs, User's Manual*. Hydrologic Engineering Center, Davis, California.

U.S. Army Corps of Engineers. (June 1994). *Hydraulic Design of Flood Control Channels.* EM 1110-2-1601.Washington, D.C.

U.S. Army Corps of Engineers. (October 1993). *River Hydraulics*. EM 1110-2-1416.

U.S. Army Corps of Engineers. (1991). *HEC-2 Water Surface Profiles. User Manual*, Version 4.6.2, May 1991

U.S. Army Corps of Engineers. (2005). *HEC-RAS River Analysis System. User Manual*, Version 3.1.3, May 2005.

U.S. Department of Agriculture Forest Service. (2002). *A Soil Bioengineering Guide for Streambank and Lakeshore Stabilization*.

U.S. Department of the Interior, Bureau of Reclamation. (1984). *Computing Degradation and Local Scour*. Technical Guideline for Bureau of Reclamation. Denver, Colorado. (As written by Ernest L. Pemberton and Joseph M. Lara).

U.S. Department of the Interior, Bureau of Reclamation. (1987). *Design of Small Dams.* Washington, D.C.

Figure 5-1 Example of a Grass-Lined Channel

Figure 5-2 Example of Wetland-Bottom Channel

Figure 5-3 Example of Riprap-Lined Channel

Figure 5-4 Example of Concrete-Lined Channel

Figure 5-5 Example of Bank-Lined Channel

Figure 5-6 Example of Concrete Trickle Channel

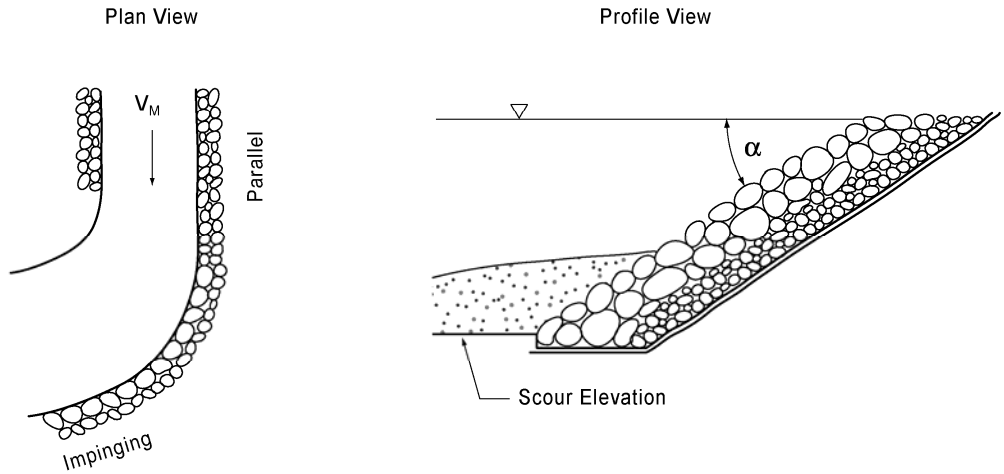

Figure 5-7 Definition Sketch for Riprap Bank Protection Sizing

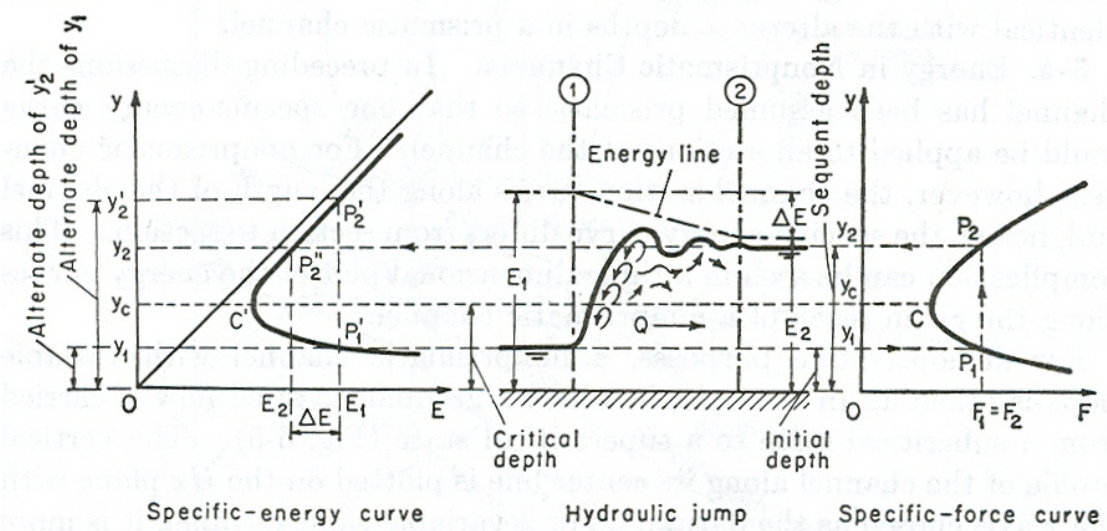

Chow (1959)

Figure 5-8 Specific Energy Curve

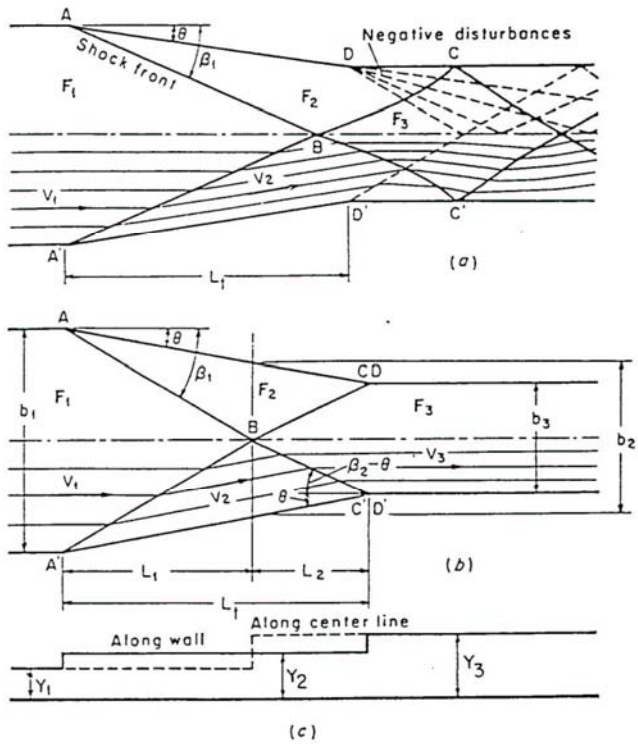

Chow (1959)

Figure 5-9 Supercritical Contraction Angle Definitions

Figure 5-10 Example of Sloping Grouted Boulder Drop Structure

Figure 5-11

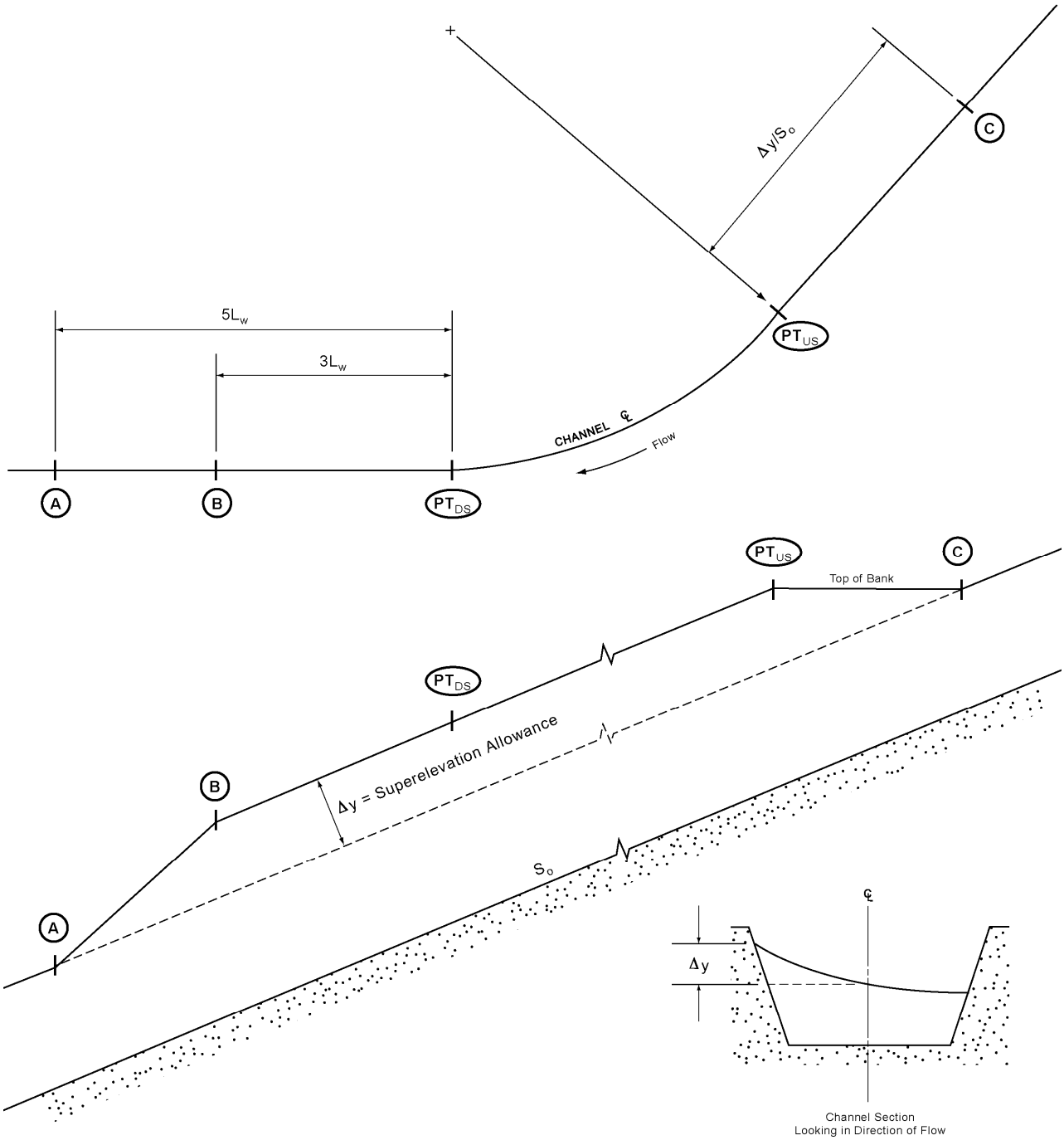

Figure 5-11 Layout for Freeboard Superelevation Allowance

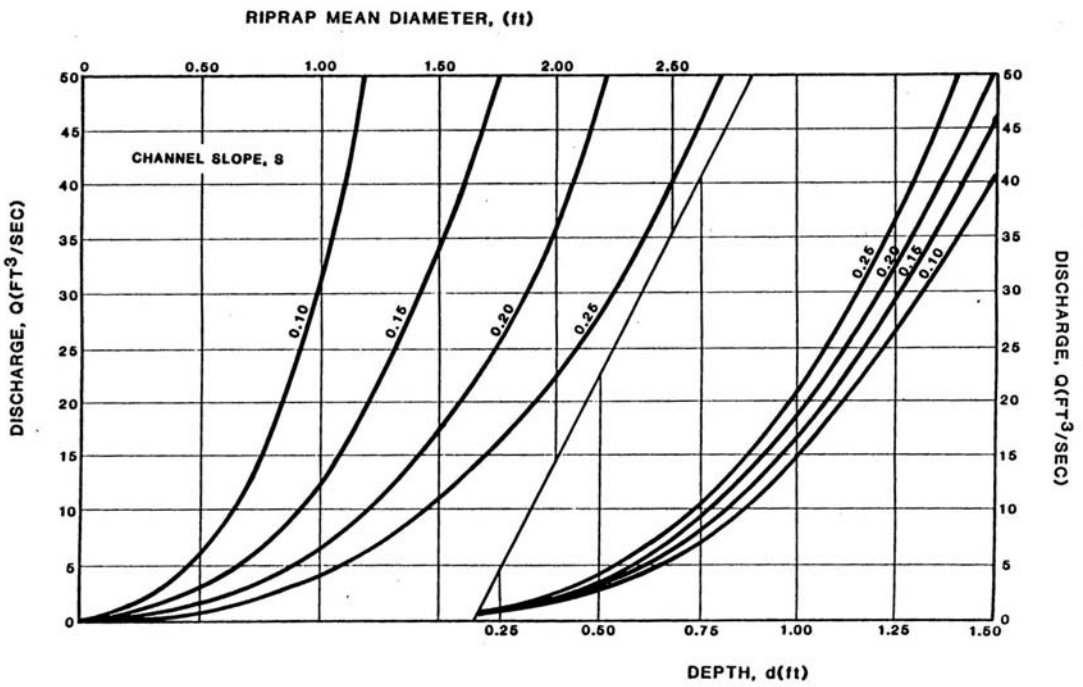

Triangular Channel (b=0, z=3)

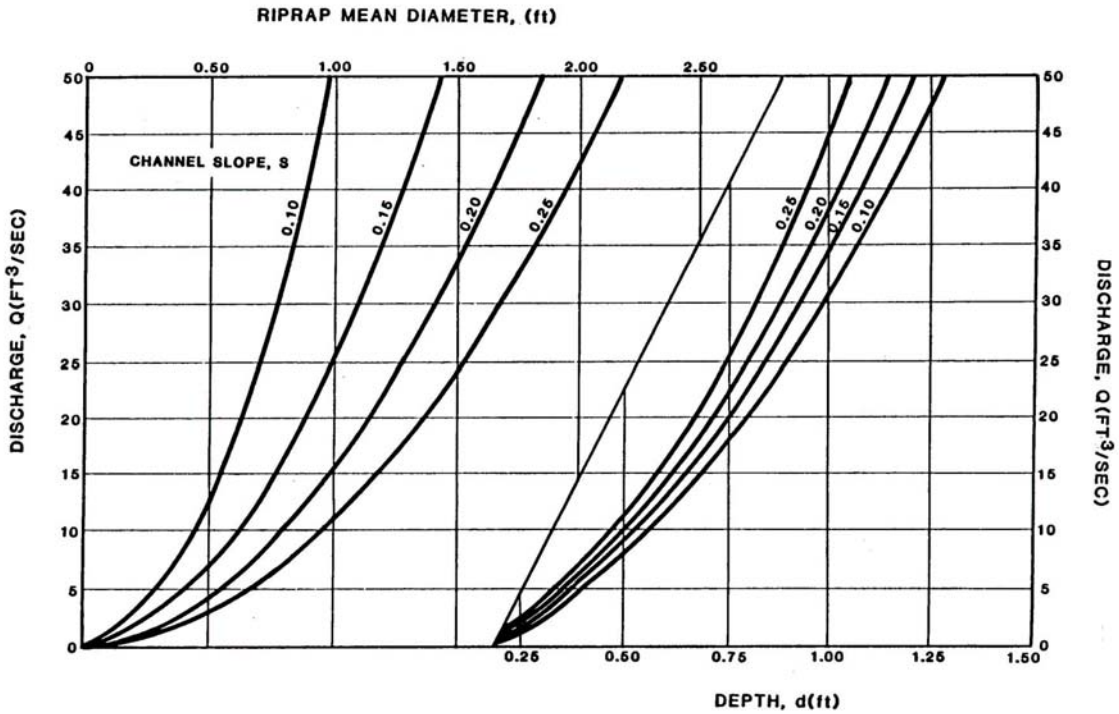

Trapezoidal Channel (b=2 ft, z=3)

Figure 5-12 Design Nomographs for Riprap on Steep Channels

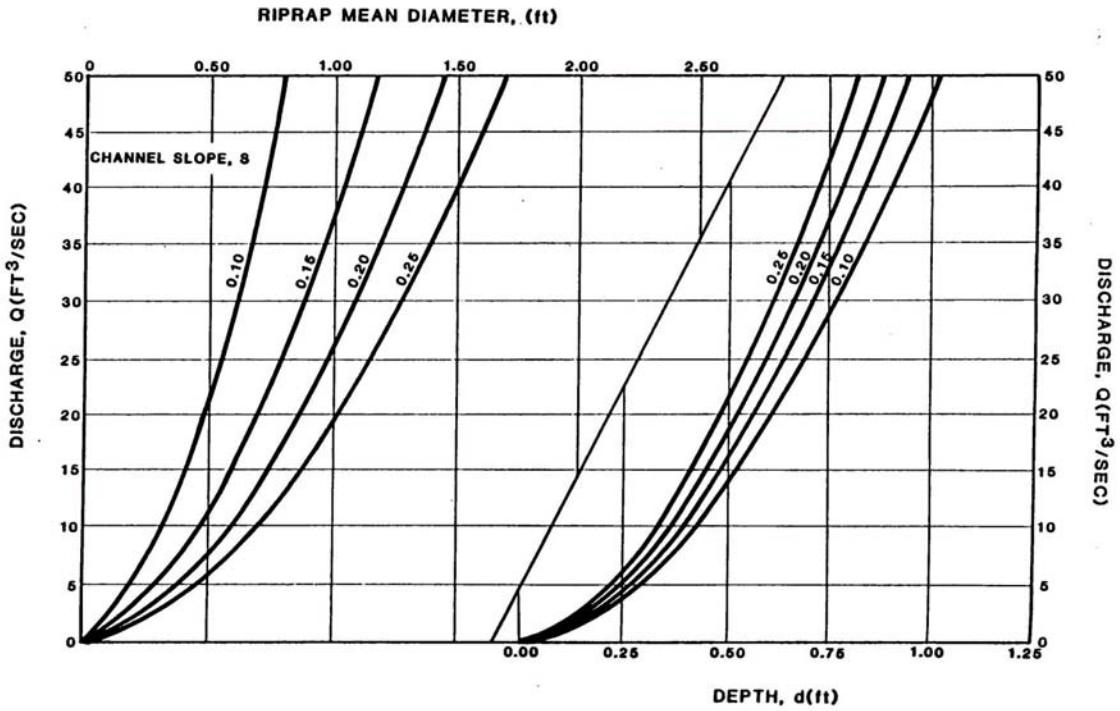

Trapezoidal Channel (b=4 ft , z=3)

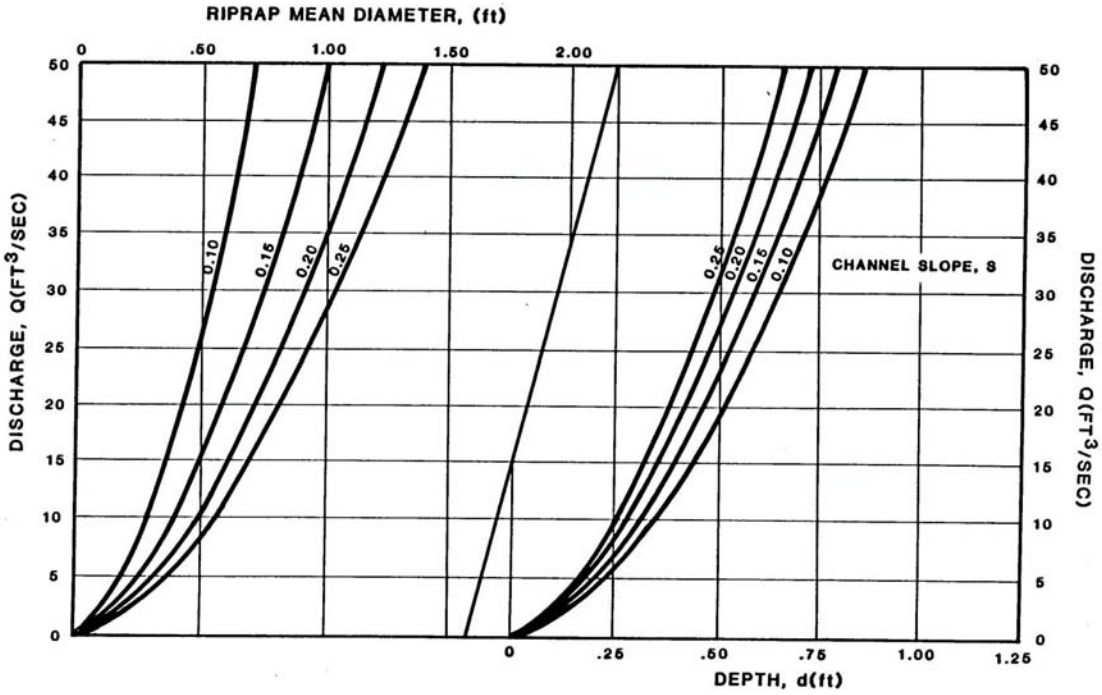

Trapezoidal Channel (b=6 ft, z=3)

Figure 5-12 Design Nomographs for Riprap on Steep Channels

Figure 5-13

Transition Type	Expansion Coefficient	Contraction Coefficient
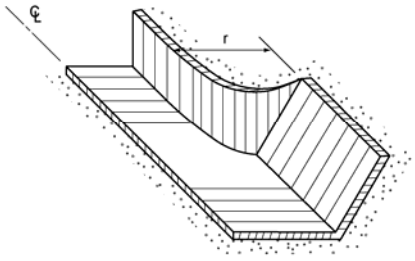 Cylindrical Quadrant	K_{te}=0.20	K_{tc}=0.15
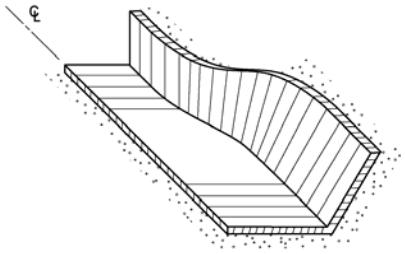 Warped	K_{te}=0.20	K_{tc}=0.10
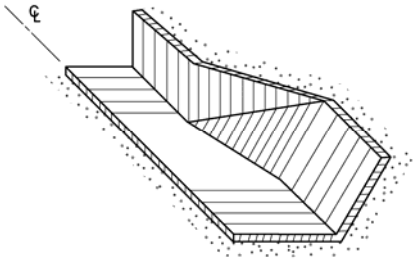 Wedge	K_{te}=0.50	K_{tc}=0.30
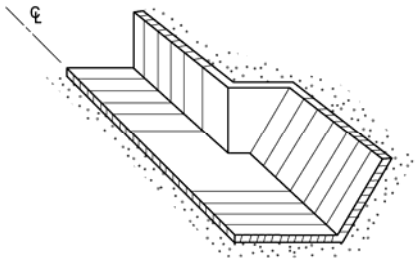 Square End	K_{te}=0.75	K_{tc}=0.30
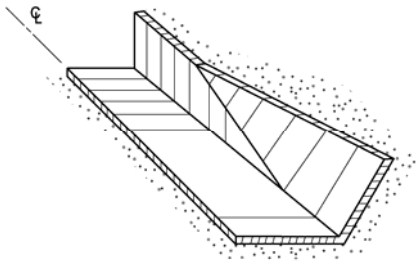 Straight-Line	K_{te}=0.50	K_{tc}=0.30

Figure 5-13 Typical Subcritical Transition Sections and Loss Coefficients

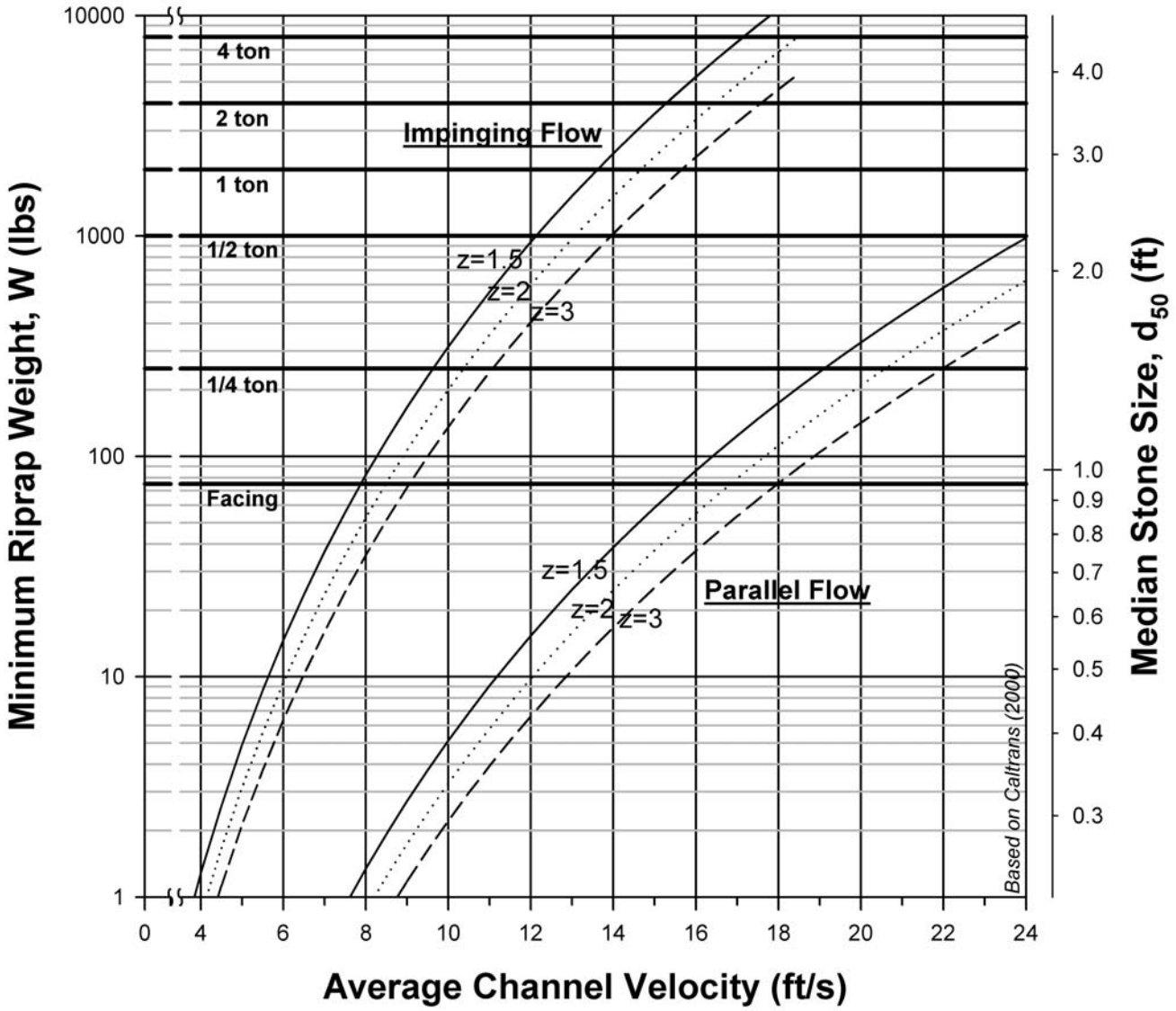

Figure 5-14 Minimum Stone Weight for Riprap Channel Sideslopes

Figure 5-15

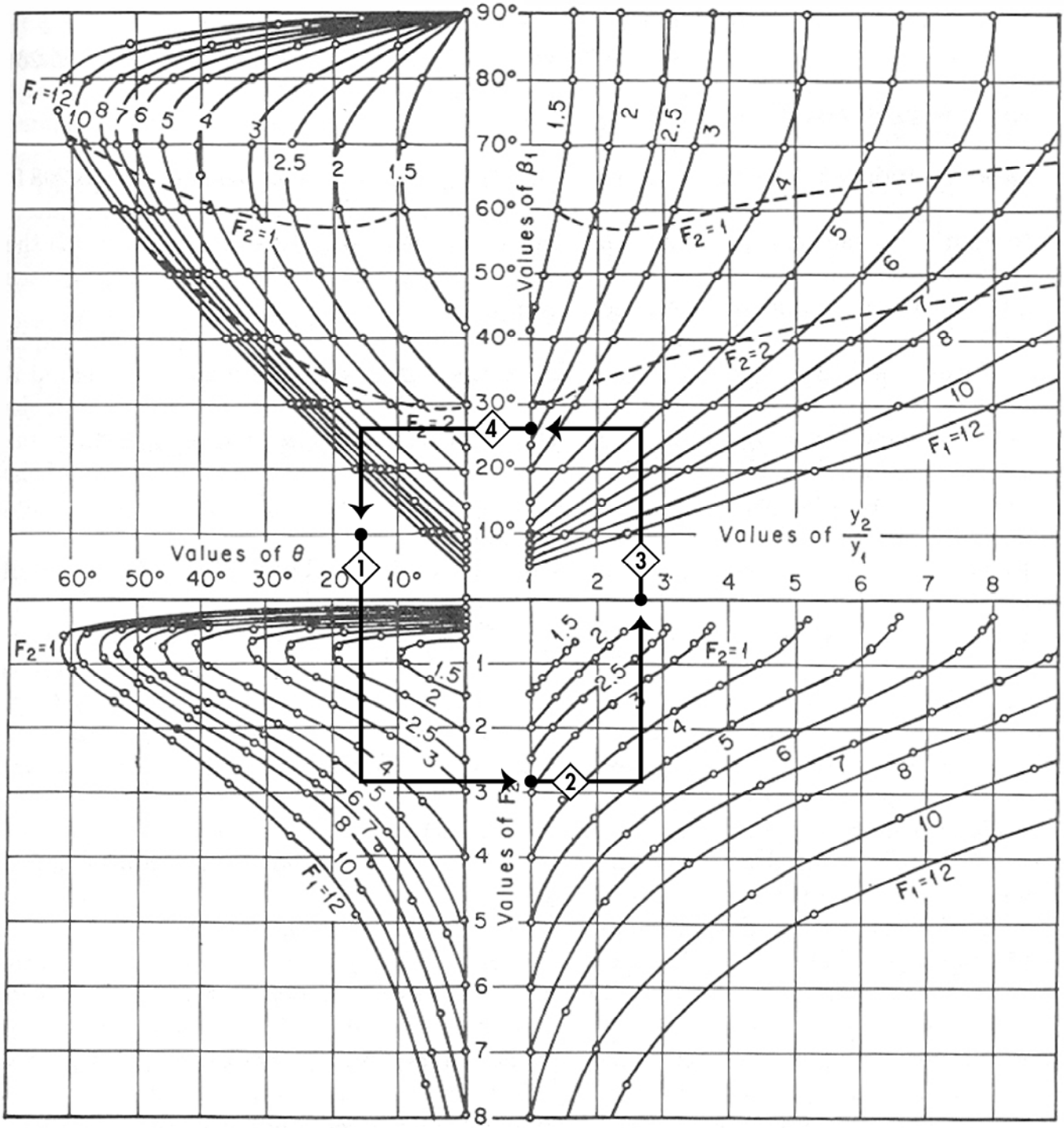

Example: For F_{R_1}=5.0 and θ=15º, (1) read F_{R_2}=2.8; (2) read y_2/y_1=2.75; (3) read β_1=27º; (4) read θ=15º (check).

Figure 5-15 Design Nomograph for Supercritical Contraction Transition Length and Wave Angle

Figure 5-16

Section	Area	Wet Perimeter	Hydraulic Radius	Top Width	Hydraulic Depth	Critical Section Factor
	(A)	(P)	(R)	(T)	(D)	($Z_C=AD^{0.5}$)
Rectangle	by	$b+2y$	$\frac{by}{b+2y}$	b	y	$by^{3/2}$
Trapezoid	$(b+zy)y$	$b+2y\sqrt{1+z^2}$	$\frac{(b+zy)y}{b+2y\sqrt{1+z^2}}$	$b+2zy$	$\frac{(b+zy)y}{b+2zy}$	$\frac{\left[(b+zy)y\right]^{3/2}}{\sqrt{b+2zy}}$
Triangle	zy^2	$2y\sqrt{1+z^2}$	$\frac{zy}{2\sqrt{1+z^2}}$	$2zy$	$y/2$	$\frac{\sqrt{2}}{2}zy^{5/2}$
Circle[(1)]	$\frac{1}{8}(\theta-\sin\theta)d_o^2$	$\frac{1}{2}\theta d_o$	$\frac{1}{4}\left(1-\frac{\sin\theta}{\theta}\right)d_o$	$\left(\sin\frac{\theta}{2}\right)d_o$ or $2\sqrt{y(d_o-y)}$	$\frac{1}{8}\left(\frac{\theta-\sin\theta}{\sin\frac{\theta}{2}}\right)d_o$	$\frac{\sqrt{2}}{32}\frac{(\theta-\sin\theta)^{3/2}}{(\sin\theta/2)^{1/2}}d_o^{5/2}$

(1) θ describes the angle that includes the chord corresponding to the water surface (see Figure 5-17), measured in radians; $\theta = 2\arcsin\left(\frac{2y}{d_O}-1\right)+\pi$

Figure 5-16 Cross-Section Hydraulic Elements

Figure 5-17

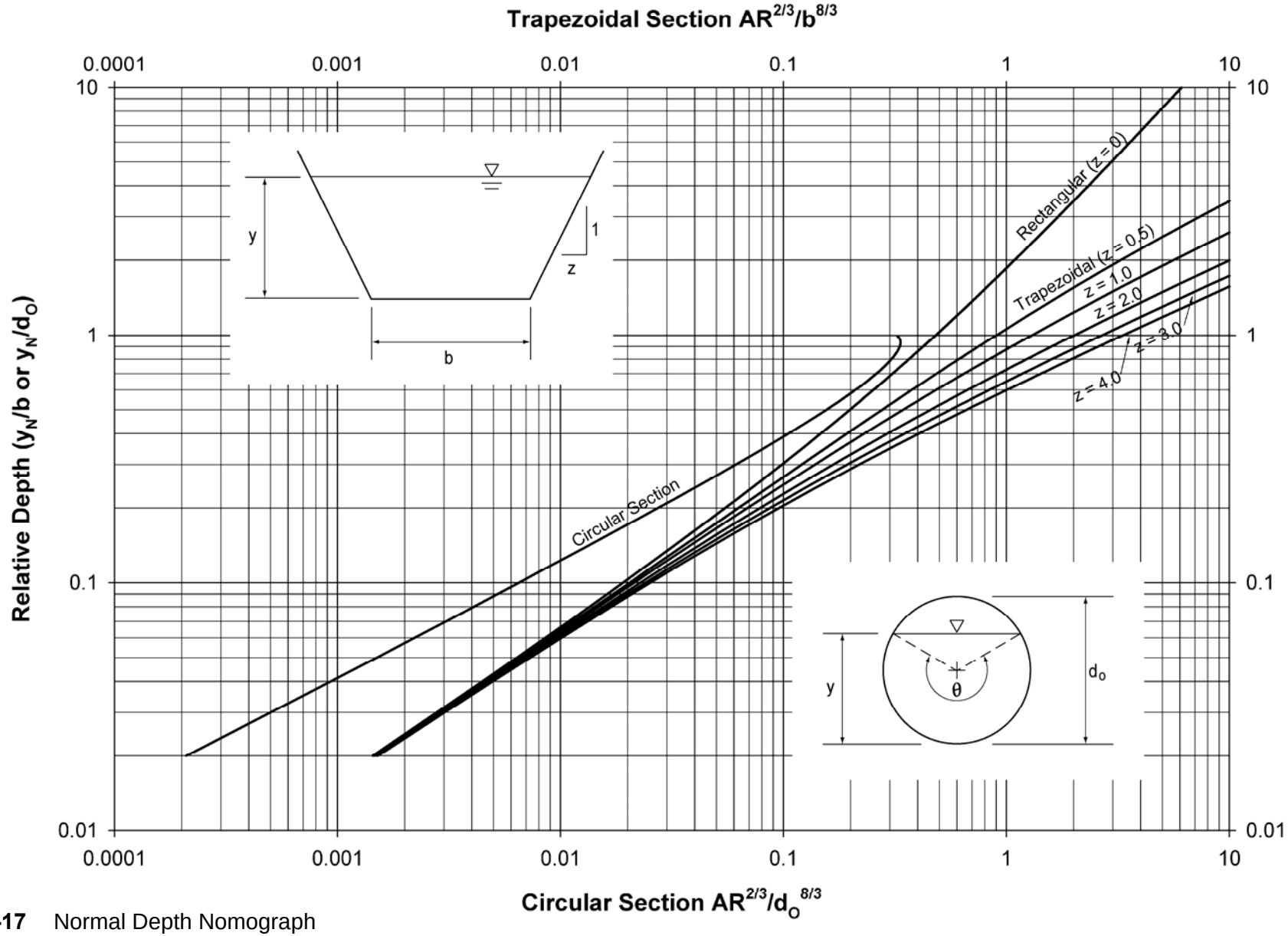

Figure 5-17 Normal Depth Nomograph

Figure 5-18

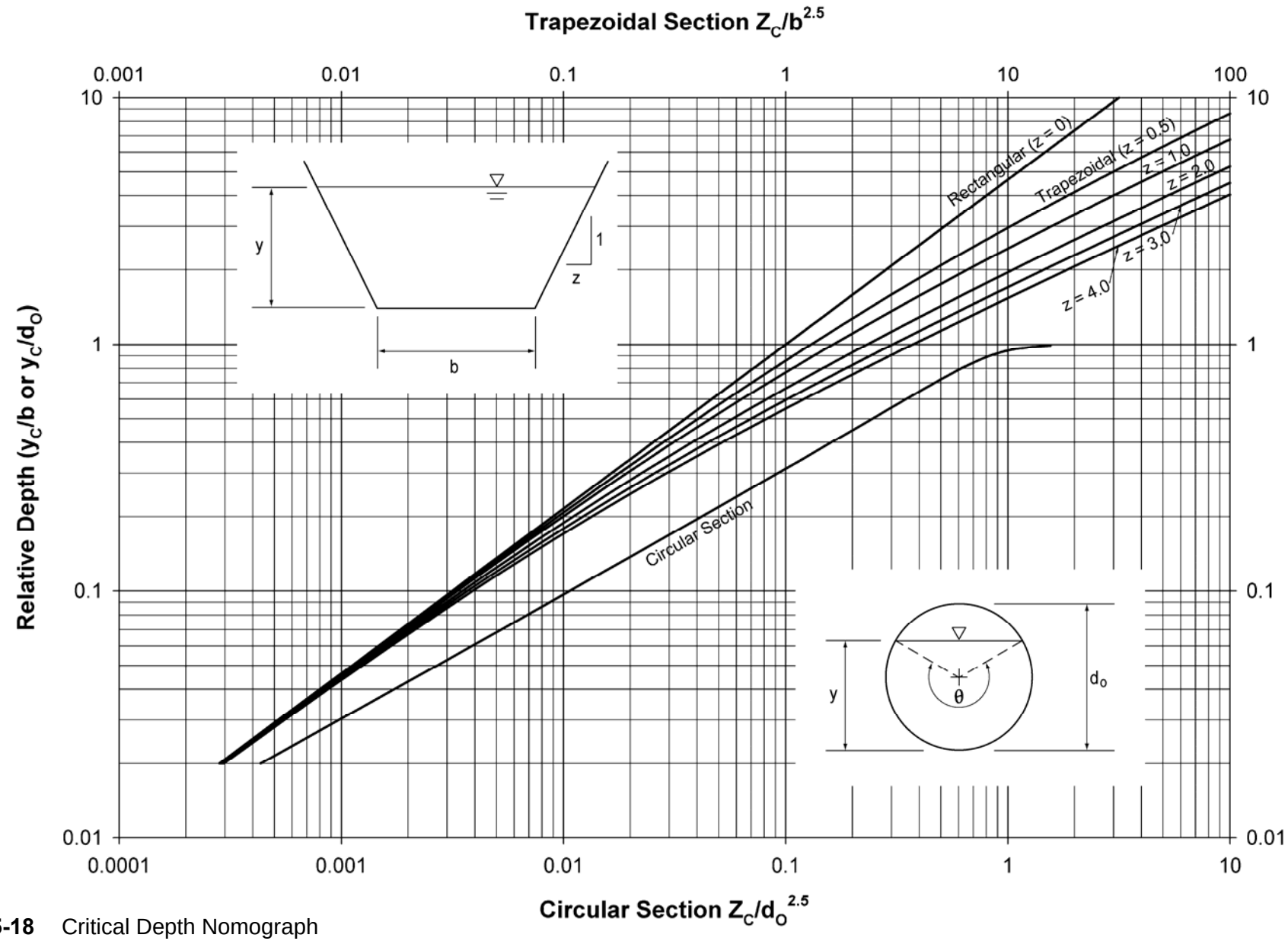

Figure 5-18 Critical Depth Nomograph

Figure 5-19

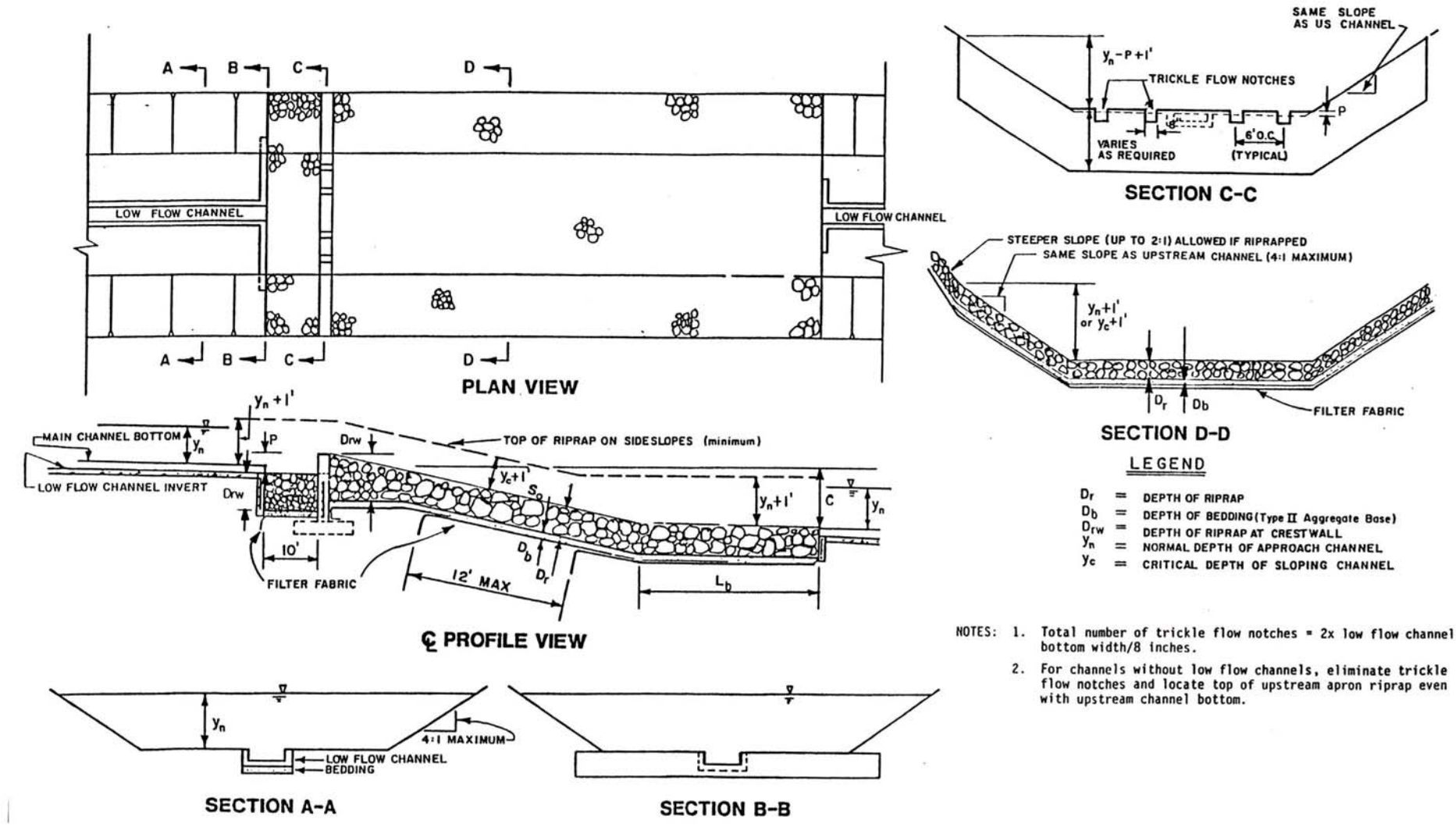

Figure 5-19 Grouted Riprap Drop Structure (for Illustration Only)

6 DETENTION BASINS

6.1 INTRODUCTION

The development of a site often results in an increase in peak discharges and velocities of runoff from the property. Stormwater detention facilities temporarily store storm runoff and release it in a controlled manner in order to reduce or eliminate flooding or other adverse effects downstream. The temporary storage of stormwater can often decrease the cost of downstream conveyance facilities and provide water quality benefits.

Storm water facilities in the San Diego Region are typically designed to convey ultimate (post-developed) condition peak flows. Therefore, detention basins have historically not been a major component of regional flood management. Detention facilities shall only be specified when necessary and approved by the governing agency.

This Chapter discusses general design criteria for stormwater detention, standard features of detention facilities, and maintenance issues. This Chapter also provides guidance on detention routing analysis and hydraulic design of stormwater detention facilities.

The discussion in this Manual focuses on stormwater detention planning and design in the context of stormwater conveyance and flood management (i.e., stormwater quantity). For a more detailed discussion of stormwater quality issues and design criteria, the design engineer is directed to other resources, including the San Diego County SUSMP. It is allowable to have dual-use facilities for hydromodification and flood peak flood attenuation. Reference your local jurisdiction's SUSMP for details on hydromodification design.

This Manual addresses stormwater detention facilities, which only temporarily detain storm water. Other facilities, commonly referred to as retention facilities, capture all the runoff from a watershed and have no outlet structures to release water downstream. While retention structures have many applications (e.g., water quality infiltration and irrigation), they are beyond the scope of this Manual. When designed only for peak flood attenuation, retention basins with standing water are discouraged.

Stormwater detention facilities can be classified in many ways based on their design characteristics. The discussion in this Manual focuses on dry-pond, on-line stormwater detention facilities. In many cases, site constraints or other project requirements may warrant consideration of alternative types of facilities. At a minimum, all detention facilities must meet the release rate criteria outlined in Section 6.2.1. This Manual's guidance on other detention facility features, routing calculations, and hydraulic design can be adapted and applied to these situations with due care, and specific design criteria developed in consultation with the governing agency. As a reference, the following paragraphs describe several categories of detention facilities.

Wet Pond versus Dry Pond. Water remains in wet pond detention facilities during the dry periods between storm events. Wet pond outlet structures are elevated above the lowest elevation of the basin. Wet ponds are only feasible when inflows into the pond exceed the loss rates from the pond due to infiltration and evaporation. Wet ponds often have aesthetic and water quality advantages, but can experience problems such as odors, floating debris, and vectors such as mosquitoes when not properly maintained. When designed only for peak flood attenuation, wet pond detention facilities are discouraged in San Diego County. Dry pond facilities drain completely between storm events, with outlets positioned at or below the lowest elevation of the basin.

Aboveground versus Belowground. Aboveground detention facilities typically consist of a depressed or excavated area, often with an earthen dam or embankment. Below ground facilities may be appropriate when there is not adequate surface area for aboveground detention. Underground facilities may have special hydraulic and maintenance requirements such as a forebay or pre-treatment of incoming flows, that must be considered carefully during the selection and design process.

On-Line versus Off-Line (Flow-By). On-line detention facilities are positioned such that all runoff from the upstream watershed must pass through the basin. Off-line detention facilities are positioned off the main line of flow. By "skimming off" only larger flows, off-line detention basins often require smaller outlet structures and sometime less storage volume than on-line detention facilities. Off-line facilities designed for flood reduction purposes are typically not as effective for water quality treatment as on-line facilities.

Regional versus On-Site. Regional detention facilities are designed to handle flows from relatively large watershed areas. On-site detention facilities are designed to attenuate flows from a particular site.

Hydraulically Independent versus Interconnected Facilities. Independent detention facilities might be connected to one another, but downstream facilities do not influence the hydraulics of the upstream facilities, i.e. the downstream water surface does not affect the outlet from the upstream facility. Interconnected detention facilities are directly connected to one another and interact hydraulically, i.e., the downstream water surface submerges the outlet from the upstream facilities. Reverse flow can occur through an inter-connected facility if back-flow prevention devices are not provided.

6.2 DESIGN CRITERIA

6.2.1 Protection Levels (Release Rate)

Detention basins may be required depending on site-specific conditions. Detention basin release rates must meet the requirements of local downstream drainage facilities. Examples of these conditions and requirements include:

- Downstream drainage facilities are insufficient to convey post-project peak design flows. The capacity of downstream conveyance systems shall be analyzed in accordance with this Manual and compared against the peak design runoff from the tributary watershed assuming fully improved conditions. If the downstream facilities are not improved, a detention basin may be required to reduce peak flows to the capacity of the existing downstream facility.
- The local drainage master plan limits the maximum peak flow in a particular facility. A detention basin may be required to reduce peak flows to the level prescribed by the drainage master plan.

Flood-control detention facilities are not required when the project discharges to a master-planned regional flood control facility designed to accommodate increased developed-condition flows. The design engineer shall confirm with the governing agency whether detention is required at a particular site. The magnitude of the peak flow and type of hydrograph shall be determined following methods outlined in the current version of the *San Diego County Hydrology Manual*.

The design engineer must also determine if there are other project-specific requirements based on the project's location in a particular watershed or applicable requirements outlined by other reviewing agencies. For instance, the San Diego Resource Protection Ordinance requires the attenuation of particular storm frequencies on certain watersheds, and agencies such as the California Coastal Commission, Regional Water Quality Control Board (Regional Board), and

the California Department of Water Resources, Division of Safety of Dams (DSOD) might have specific requirements for projects within their jurisdiction.

The design engineer shall confirm that outflow from a detention basin shall not have a detrimental effect on downstream facilities. In some cases detention facilities, while reducing peak on-site flows, might increase the peak flow from the watershed as a whole by delaying the on-site peak flow rate to coincide more closely with the peak from the larger watershed. Therefore, hydrologic and hydraulic analyses must extend downstream from the project site to determine the regional effect of a detention basin. The outflow hydrograph from a detention facility shall be routed (analyzed) through the downstream conveyance system to a reasonable point, typically to the next improved drainage facility.

Where there are undersized facilities downstream and when a basin is being used to mitigate post project downstream impacts, the basin capacity and outlet shall be designed such that the post-project peak flow rate shall be less than or equal to the pre-project flow rate for all frequency storms up to and including the 100 year event. Where the undersized offsite facility will be upsized to full capacity as part of the project, a basin will not be required to mitigate for the undersized facility. This does not relieve the project from other retention, treatment, or infiltration requirements discussed herein or in the agency's HMP and or SUMP regulations.

6.2.2 Jurisdictional Dams

The State of California defines a dam as any artificial barrier, together with appurtenant works, that impounds or diverts water (California Water Code, Division 3, Section 6002-6003). The State Division of Safety of Dams (DSOD) does not regulate structures that are 6 feet or less in height, regardless of storage capacity, nor do they regulate structures that have a storage capacity of 15 acre-feet or less, regardless of height. However, the DSOD does regulate any structure that meets the following criteria:

- Dams with the capacity to store over 15 acre-feet of water and 25 feet or more in height, measured from the natural bed of the stream or watercourse at the downstream toe of the barrier to the maximum possible water storage elevation. When the structure is not across a stream channel or watercourse, the height of the structure is measured from the lowest elevation of the outside limit of the barrier; or
- Dams over 6 feet high with the capacity to impound 50 acre-feet or more of water.

Figure 6-1 provides an illustration of DSOD depth and volume regulatory thresholds that define jurisdictional dams. Structures meeting the definition of jurisdictional dam have additional design criteria and require approvals from the DSOD, including special construction monitoring. The design engineer must consult with the governing agency and the DSOD when considering the construction of a detention facility that falls within DSOD jurisdictional limits.

6.2.3 Grading and Embankment Slopes

Dry-pond facilities shall have a low-flow or “trickle” channel to facilitate dry pond drainage between storm events. The base of all aboveground detention facilities shall have a minimum slope of one percent draining to the low-flow channel or the outlet. Forebays are recommended to capture and confine sediment and debris in one area of the detention facility.

Slopes of aboveground detention facilities shall have a side slopes of 3H:1V or milder whenever practical. Detention basins with slopes steeper than 3H:1V or where the maximum design water depth exceeds 3 feet shall be fenced to control access. The top of the embankment shall have 1 foot of freeboard above the maximum water surface elevation when the emergency spillway is conveying the maximum design flow (the 100-year undetained flow, see Section 6.2.1). The embankment shall be appropriately armored with riprap or other slope protection when necessary.

Detention facilities and embankments often have particular geotechnical considerations, and might require details such as impermeable clay or synthetic liners. Detailed design criteria for the geotechnical design of detention facility embankments are beyond the scope of this Manual. At a minimum, geotechnical investigations shall analyze the special conditions encountered at detention facilities, such as the potential for saturated soils and rapid drawdown. The design engineer may consult references such as the *Design of Small Dams* (U.S. Bureau of Reclamation, 1987) for further information.

6.2.4 Standard Features (Inlets, Outlets, and Emergency Spillways)

This section provides minimum design criteria for standard detention facility features such as inlets, outlets, and emergency spillways. Figure 6-7 (page 6-19) presents an illustration of the standard features of an aboveground detention basin.

6.2.4.1 Inlet Structures

Aboveground detention facilities shall have adequate energy dissipation and/or erosion protection at the facility inlet to avoid damage as flow enters the facility. Chapter 7 provides a discussion of energy dissipation devices. Incorporating forebays and sediment traps at inflow points to larger basins can reduce the amount of sediment and debris to the main part of the facility, and are encouraged whenever practical.

6.2.4.2 Outlet Structures

Outlet structures must be carefully designed to ensure proper facility operation, to facilitate maintenance, and to maintain safety. Outlet structures for detention facility shall be designed to safely convey the design release rate as discussed in Section 6.2.1. Outlet structures shall completely drain the facility within 96 hours of the end of the storm event. Anything longer than 96 hours requires a Vector Control Plan be submitted to ESO.

Outlet structures shall be constructed with no moving parts whenever practical. Collars or other anti-seepage devices shall be provided for all outlet structures conveying flow through a detention basin embankment. Appropriate energy dissipation shall be provided downstream of all detention facility outlet works (see Chapter 7).

Riser pipes and culvert outlet structures shall be equipped with debris racks, screens, or anti-vortex devices in order to help prevent clogging, and to prevent entry by unauthorized persons. These appurtenances shall be well secured but removable for the purposes of maintenance. Debris racks must not interfere with the hydraulic capacity of the outlet. Riser pipes or outlet structures with an inside dimension of 36 inches or larger and taller than 6 feet shall have ladder rungs or similar safety devices to facilitate access by maintenance personnel. See Section 6.4.8 for buoyancy issues.

6.2.4.3 Emergency Spillways

Emergency spillways provide a safe means for conveying flows in excess of the maximum design capacity of the outlet works. Spillways shall be designed to pass flow from an "undetained" 100-year design event (i.e., the maximum 100-year peak flow that enters the basin) as defined in the current version of the *San Diego County Hydrology Manual*. Spillways shall be appropriately protected to prevent excessive damage to the structure or adjacent property during spill events. Spillways shall have appropriate downstream energy dissipation (see Chapter 7).

6.2.4.4 Vegetation

Plans for aboveground detention facilities shall include a landscape-planting plan. The landscape plan is critical to the aesthetics and maintainability of the facility. The type of vegetation used to landscape an aboveground detention facility is a function of the frequency and duration of

inundation of the area, soil types, and potential conjunctive uses for the basin. A low flow vegetated channel to capture the first flush should be designed within the detention basin to satisfy stormwater criteria. See the local jurisdiction's SUSMP. Vegetation and plant detritus shall not interfere with the hydraulic function of inlets, outlets, or spillways. Large trees and shrubs are not recommended on dams or fill embankments (see DOSD requirements). High densities of vegetation may warrant an adjustment of the design storage volume of the facility.

6.2.4.5 Other Features

Appropriate signage warning that areas are subject to flooding during storm events shall be provided for detention facilities designed for conjunctive recreational use. Detention facilities located near roadways shall have guardrails or other safety measures acceptable to the governing agency. All detention facilities shall provide a debris/sediment depth gauge or other mechanism that will serve as a maintenance guide.

6.2.5 Detention Facility Plans

The design engineer shall note the following on detention facility drawings: maximum design inflow and velocity; maximum total design outflow and velocity from the outlet works; maximum design storage volume and water surface elevation in the facility; and the maximum design flow, depth, and velocity over the emergency spillway. Plans for detention facilities shall include appropriate details for the facility inlet, outlet structures, energy dissipaters, the emergency spillway, maintenance measures, and cross-sections of embankment fills.

6.2.6 Maintenance Criteria

All detention facilities require maintenance to ensure proper function throughout their lifetime. This section describes minimum measures required for the maintenance of detention facilities, including maintenance access, appropriate easements and environmental permitting, and plans for operation and maintenance.

6.2.6.1 Operation and Maintenance Plan

All detention facilities shall have an operation and maintenance plan. These operation and maintenance plans shall specify regular inspection and maintenance at specific time intervals (e.g., annually before the wet season) and/or maintenance "indicators" when maintenance will be triggered (e.g., an accumulation of 6 inches of sediment and debris, or the basin does not drain within 72 hours). Operation and maintenance plans shall ensure that vegetation is removed or maintained on a regular basis to preserve the function of the facility.

6.2.6.2 Maintenance Access

Detention facilities shall be accessible to maintenance personnel and equipment for the removal of accumulated silt and debris, and the maintenance and repair of inlets, outlets, spillways, and embankments. Aboveground detention facilities greater than 3 feet in depth with more than 1 acre-feet of storage volume must provide access for maintenance equipment whenever practical. The detention facility design shall provide stable access to the base of the facility, outlet works, inlets, and any forebays. Maintenance access roads shall be designed to County of San Diego private road standards.

6.2.6.3 Easements and Maintenance Mechanisms

All detention basins require lifetime maintenance. The project owner and design engineer shall consult the governing agency for determination of which maintenance mechanism is required for a particular project. At a minimum, privately owned and maintained detention facilities shall have a recorded easement agreement with a covenant binding on successors, or another

mechanism acceptable to the governing agency. The County of San Diego *Stormwater Standards Manual* provides more information on easements and maintenance mechanisms.

6.2.6.4 Environmental Permitting

Detention facilities are often located within or adjacent to sensitive environmental areas. The design engineer must investigate which permits might be necessary from various Agencies, including but not limited to: U.S. Army Corps of Engineers (e.g., Section 404 Wetland Permit), U.S. Fish and Wildlife Service, California Department of Fish and Game (e.g., Section 1600 Permit), California State Water Resource Control Board and Regional Water Quality Control Board (e.g., Section 401 Water Quality Certification), and California Coastal Commission. It is important that the final permits and/or permit conditions allow for the future and perpetual maintenance of a detention facility without the necessity of returning to the permitting agency.

6.2.7 Conjunctive Use of Detention Facilities

Conjunctive use means the use of a facility for two or more purposes. Because dry-pond detention facilities do not store water between storm events, it is often possible to propose conjunctive uses for detention facilities involving water quality treatment and active or passive recreation. Forebays are recommended to capture and confine sediment and debris in one area of the detention facility to enhance the possibilities for conjunctive use by reducing the scale of maintenance.

Conjunctive use of detention facilities for water quality treatment and flood management is acceptable, and encouraged when it is desirable and feasible. When an aboveground detention facility is used for both water quality and flood control, the flood storage volume shall be provided *in addition to* the storage volume designated for water quality treatment. If the facility takes more than 96 hours to drain, then the hydromodification volume should not be included in the detention routing analysis of the peak (100-year) flow. Design criteria for water quality facilities is beyond the scope of the Manual; the design engineer is referred to the County of San Diego's SUSMP or appropriate governing agency's stormwater quality manual for water quality aspects of detention basin design.

6.3 DESIGN PROCEDURE - DETENTION ROUTING ANALYSIS

This section presents general procedures for the hydrologic (routing) analysis of detention basin performance. By following the analysis procedures outlined here, the design engineer can design a detention facility design that successfully meets the release rate criteria outlined in Section 6.2.1.

6.3.1 Basic Data

Storage routing and design calculations primarily depend upon three basic data: (1) the inflow hydrograph, (2) the stage-storage relationship, and (3) the stage-discharge relationship for the outlet structures.

6.3.1.1 Inflow Hydrograph

The inflow hydrograph to a detention facility shall be determined using the methods outlined in the County of San Diego's SUSMP. Figure 6-2 illustrates the relationship between inflow and outflow hydrographs when routed through a detention facility.

6.3.1.2 Stage-Storage Curve

Stage-storage curves define the relationship between the depth of water (stage) and the storage (volume) available in the reservoir. Stage-storage curves are typically developed using topographic mapping and/or grading plans for the detention facility. Examples of equations that

may be used to estimate the stage-storage curve may be determined by either an average-end area calculation (Equation 6-1) or as the volume of a conic frustum (Equation 6-2):

$$V_{1,2} = \frac{(A_1 + A_2)}{2}(h_2 - h_1) \tag{6-1}$$

$$V_{1,2} = \frac{1}{3}\left(A_1 + A_2 + \sqrt{A_1 A_2}\right)(h_2 - h_1) \tag{6-2}$$

where …

$V_{1,2}$ = storage volume between elevations h_1 and h_2 (ft^3);
A_1, A_2 = surface area at elevation elevations h_1 and h_2, respectively (ft^2); and
h_1, h_2 = lower and upper bounding elevations, respectively (ft).

The stage-storage curve begins at the bottom of the storage basin or the maximum elevation of sediment or debris allowed in the operation and maintenance plan, whichever is greater. Volume reduction factors may be applied to account for vegetation and/or additional sediment and debris deposition within the detention facility when necessary.

6.3.1.3 Stage-Discharge Curve

Stage-discharge curves define a relationship between the depth of water in the detention facility and the outflow or release from its outlet structures. Section 6.4 describes the basic procedures for calculating discharges from outlet control structures. Figure 6-3 illustrates a typical stage-discharge curve.

6.3.2 Storage Routing Calculations

Routing is the process of analyzing flows entering and leaving a detention facility in order to determine the change of the water surface elevation within the facility over time. Storage routing calculations are typically performed using computer programs. The routing of flows through a detention facility is fundamentally based on conservation of mass (Inflow-Outflow=ΔStorage), approximated as a finite-difference as:

$$\frac{S_{n+1} - S_n}{\Delta t} = \frac{I_n + I_{n+1}}{2} - \frac{O_n + O_{n+1}}{2} \tag{6-3}$$

where …

S_n, S_{n+1} = storage within a detention facility at a time step n and $n+1$, respectively (ft^3);
Δt = time interval (sec);
I_n, I_{n+1} = inflow rate at a time step n and $n+1$, respectively (ft^3/s); and
O_n, O_{n+1} = outflow rate at a time step n and $n+1$, respectively (ft^3/s).

The most common method for performing routing analysis for a detention facility is the storage indication or modified Puls method. The storage indication method re-arranges the expression for mass conservation as:

$$\left(\frac{2S_{n+1}}{\Delta t} + O_{n+1}\right) = \left(\frac{2S_n}{\Delta t} - O_n\right) + (I_n + I_{n+1}) \tag{6-4}$$

The left-hand side of Equation 6-4 is usually called the storage indication number. The storage indication method facilitates the routing analysis of detention facilities, which can be accomplished by spreadsheet calculations or using computer programs such as the Corps of

Engineers' *HEC-1 Flood Hydrograph Package*, *HEC-HMS Hydrologic Modeling System*, or proprietary software packages.

6.4 DESIGN PROCEDURE - OUTLET STRUCTURES AND SPILLWAYS

The type and configuration of outlet structures and emergency spillway establish the hydraulic performance of a detention facility. This section describes the basic methods available to define the performance curve for common types of detention facility outlets, including: culverts, weirs, orifices, risers, perforated risers, and combination outlets.

6.4.1 Culverts

The hydraulic behavior of culverts is complex because different types of flows can occur depending upon the upstream downstream conditions, flow rate, and the barrel and inlet characteristics. Chapter 4 of this Manual presents guidance for the analysis of culvert flow.

6.4.2 Weirs

6.4.2.1 Sharp-Crested Weirs

Sharp-crested weirs have a relatively thin crest such that water will tend to develop a nappe as it flows over the crest (Figure 6-4). The capacity of a sharp-crested weir depends on the influence of end contractions. For a sharp-crested weir with no contractions, flow is calculated with the following equation:

$$Q = C_{SCW} L H^{3/2} \tag{6-5}$$

where …

Q = flow over weir crest (ft^3/s);
C_{SCW} = sharp-crested weir coefficient;
L = length of weir crest (ft);
H = head above of weir crest, excluding velocity head (ft); and
H_W = height of the weir crest (ft).

The weir coefficient C_{SCW} varies with the ratio of hydraulic head above the weir and the height of the weir (H/H_W). For U.S. traditional units, the weir coefficient can be calculated as:

$$C_{SCW} = 3.27 + 0.4\frac{H}{H_W} \tag{6-6}$$

A sharp-crested weir with two end contractions can be analyzed using the equation:

$$Q = C_{SCW}\left(L - 0.2H\right)H^{3/2} \tag{6-7}$$

When the tailwater behind a sharp-crested weir rises above the weir crest elevation, the submerged condition will reduce the discharge over the weir. The equation for a submerged sharp-crested weir is:

$$\frac{Q_S}{Q} = \left[1 - \left(\frac{H_2}{H_1}\right)^{3/2}\right]^{0.385} \tag{6-8}$$

where …

Q_S = flow over submerged sharp-crested weir (ft^3/s);

Q = flow over sharp-crested weir under un-submerged conditions with same upstream headwater (ft^3/s); and

H_1, H_2 = head above of weir crest upstream of crest and downstream of crest, respectively, excluding velocity head (ft).

6.4.2.2 V-Notch Weirs

V-notch weirs are a particular type of sharp-crested weir with a triangular cross-section. The discharge through a v-notch weir can be calculated from the following equation:

$$Q = 2.5 \tan\left(\frac{\theta}{2}\right) H^{5/2} \qquad (6\text{-}9)$$

where …

Q = flow over weir crest (ft^3/s);

θ = angle of v-notch (degrees) (ft); and

H = depth of water above apex of v-notch (ft).

6.4.2.3 Broad-Crested Weirs

In most cases, spillways traversing the top of an embankment are best modeled as broad-crested weirs. The equation for evaluating flow over a broad-crested weir is:

$$Q = C_{BCW} L H^{3/2} \qquad (6\text{-}10)$$

where …

Q = discharge over the weir (ft^3/s);

C_{BCW} = broad-crested weir discharge coefficient;

L = length of weir crest (ft);

H = head above of weir crest, excluding velocity head (ft);

The water surface elevation is measured at least 2.5 times the head above the weir elevation (2.5H) upstream of the weir crest when determining the broad-crested weir coefficients. Table 6-1 provides broad-crested weir coefficients based on the effective head over the weir and the breadth of the weir. A typical roadway crossing can be modeled as a broad-crested weir with a weir coefficient C_{BCW}=2.6; for other applications, a broad-crested weir coefficient of C_{BCW}=3.0 is usually appropriate.

When using the broad-crested weir model to evaluate the capacity of a spillway with a rectangular or trapezoidal cross-section, the length of the weir crest is set as the base width of the spillway channel (b). The velocity of flow over the crest spillway is calculated as it passes through critical depth at the control section:

$$v_c = 3.18\left(\frac{Q}{b}\right)^{1/3} \qquad (6\text{-}11)$$

where …

v_C = critical velocity (ft/s);

Q = discharge over the weir (ft^3/s);

b = length of weir crest (ft).

Table 6-1 Broad-Crested Weir Coefficient (C_{BCW}) as Function of Effective Head Over Weir and Breadth of Weir

Measured Head* (H)	Weir Crest Breadth, b (ft)										
(ft)	0.50	0.75	1.0	1.5	2.0	2.5	3.0	4.0	5.0	10.0	15.0
0.2	2.80	2.75	2.69	2.62	2.54	2.48	2.44	2.38	2.34	2.49	2.68
0.4	2.92	2.80	2.72	2.64	2.61	2.60	2.58	2.54	2.50	2.56	2.70
0.6	3.08	2.89	2.75	2.64	2.61	2.60	2.68	2.69	2.70	2.70	2.70
0.8	3.30	3.04	2.85	2.68	2.60	2.60	2.67	2.68	2.68	2.69	2.64
1.0	3.32	3.14	2.98	2.75	2.66	2.64	2.65	2.67	2.68	2.68	2.63
1.2	3.32	3.20	3.08	2.86	2.70	2.65	2.64	2.67	2.66	2.69	2.64
1.4	3.32	3.26	3.20	2.92	2.77	2.68	2.64	2.65	2.65	2.67	2.64
1.6	3.32	3.29	3.28	3.07	2.89	2.75	2.68	2.66	2.65	2.64	2.63
1.8	3.32	3.32	3.31	3.07	2.88	2.74	2.68	2.66	2.65	2.64	2.63
2.0	3.32	3.31	3.30	3.03	2.85	2.76	2.27	2.68	2.65	2.64	2.63
2.5	3.32	3.32	3.31	3.28	3.07	2.89	2.81	2.72	2.67	2.64	2.63
3.0	3.32	3.32	3.32	3.32	3.20	3.05	2.92	2.73	2.66	2.64	2.63
3.5	3.32	3.32	3.32	3.32	3.32	3.19	2.97	2.76	2.68	2.64	2.63
4.0	3.32	3.32	3.32	3.32	3.32	3.32	3.07	2.79	2.70	2.64	2.63
4.5	3.32	3.32	3.32	3.32	3.32	3.32	3.32	2.88	2.74	2.64	2.63
5.0	3.32	3.32	3.32	3.32	3.32	3.32	3.32	3.07	2.79	2.64	2.63
5.5	3.32	3.32	3.32	3.32	3.32	3.32	3.32	3.32	2.88	2.64	2.63

** H measured at least 2.5H upstream of weir.*

6.4.3 Orifices

A vertical orifice is a circular or rectangular opening, often located in a headwall or the sidewall of a riser structure. Figure 6-5 illustrates typical orifice configurations. The flow rate depends on the submergence of the orifice, effective height of the water above the center of the opening, and the size, shape, and edge treatment of the orifice.

For a single submerged orifice, the discharge can be determined using the standard orifice equation:

$$Q = C_O A_O \sqrt{2g(H_O)} \qquad (6\text{-}12)$$

where …

Q = orifice flow discharge (ft^3/s);
C_O = orifice discharge coefficient;
A_O = cross-sectional area of flow through the orifice (ft^2);
g = gravitational acceleration (32.2 ft/s^2);
H_O = effective head above orifice (ft); and

When the orifice is unsubmerged, the effective head H_O is measured from the centerline of the orifice to the upstream water surface elevation. For submerged orifices, the effective head is the difference in elevation of the upstream and downstream water surfaces.

When the orifice has sharp, clean edges (i.e., the material is thinner than the orifice diameter), an orifice discharge coefficient (C_O) of 0.6 is appropriate. For sharp, ragged edged orifices, such as

those produced by cutting openings in corrugated pipe with an acetylene torch, a value of C_O=0.40 should be used. The orifice coefficient should also be adjusted when the diameter of the orifice approaches the thickness of the orifice plate. Table 6-2 summarizes orifice discharge coefficient for different edge conditions. Pipes smaller than 1 foot in diameter may be analyzed as submerged orifices, as long as there is adequate headwater (H_O/D>1.5). Pipes larger than 1 foot in diameter are more appropriately analyzed as culverts (see Chapter 4). Flow through multiple orifices may be computed by summing the flow through the individual orifices.

Table 6-2 Orifice Coefficient for Different Edge Conditions

Edge Condition	Orifice Coefficient, Co
Sharp, Clean Edge (t<d)	0.60
Sharp, Ragged Edge (t<d)	0.40
Thick, Squared Edge (t>d)	0.80
Thick, Rounded Edge (t>d)	0.92

t *is thickness of orifice plate;* d *is diameter of orifice.*

6.4.4 Riser Structures

Riser structure is a general term for structures having inlet openings that are parallel to the water surface in the detention facility. Riser structures with circular cross-section are often called standpipes, and rectangular riser structures are often called inlet boxes. Figure 6-6 illustrates the hydraulic behavior of a typical riser structure. The hydraulic behavior of flow through a riser structure changes and must be analyzed differently depending on the stage in the basin. Flow through a riser structure generally proceeds through four phases: (1) riser weir flow control; (2) riser orifice flow control; (3) barrel inlet flow control; and (4) barrel pipe flow control. The USBR *Design of Small Dams* (1987) discusses the hydraulics of riser structures in more detail, and includes design nomographs (Figure 6-8) that may be used in the design of riser structures.

When the water surface reaches the top edge of the riser, flow will typically begin to pass through the structure in the manner of a sharp-crested weir (for sharp-crested weir equation and coefficients, see Section 6.4.2.1), with a crest length equivalent to the perimeter of the riser structure.

As the depth of water increases and submerges the top of the riser, the flow will transition to an orifice-type flow. This horizontal orifice flow depends upon the area of the top of the riser structure, and can be computed using the following equation:

$$Q = C_{HO} A_O \sqrt{2g(h - h_R)} \qquad (6\text{-}13)$$

where …

Q = flow through the orifice (ft^3/s);
C_{HO} = horizontal orifice coefficient;
A_O = area of the orifice (ft^2);
g = gravitational acceleration (ft/s^2);
h = elevation of water above the orifice (ft);
h_R = elevation of the crest of the riser orifice (ft).

The transition zone between weir and orifice flow for riser structures is not well defined. Though the transition from weir flow to orifice flow is gradual, it is commonly assumed to occur at a discrete water surface elevation (h_T) to simplify the analysis. The transition water surface

elevation ($h=h_T$) is found by calculating the point at which the weir equation and orifice equation yield the same discharge:

$$h_T = h_C + \frac{C_{HO} A_O}{C_{SCW} L} \qquad (6\text{-}14)$$

Thus, the weir equation is used for calculating flow through a riser structure for water surface elevations $h \leq h_T$ and the orifice equation for water surface elevations $h>h_T$.

As the water surface elevation rises further, the control can change to barrel inlet flow control and/or barrel pipe flow control. General best practice is to ensure that the outlet barrel has greater capacity than the riser structure under design conditions.

6.4.5 Perforated Risers

Perforated risers are a special case of orifice flow that can be used to obtain extended detention times. As such, they are often useful in water-quality treatment applications. Holes are normally spaced a minimum of three to four orifice diameters (center to center) apart, limiting the number of holes such that they do not compromise the overall integrity of the riser.

Assuming the riser is constructed of a relatively thin material, the perforations will operate as orifices. Therefore, the discharge through the orifices on the perforated risers is equivalent to the summation of the flow through individual orifices in the riser. The design engineer shall use care when specifying perforated risers, since they are often subject to clogging, and measures to reduce such clogging such as gravel jackets and/or wire mesh also have implications for the maintenance of the perforated riser.

6.4.6 Combination Outlets

Combinations of culverts, weirs, orifices, and riser structures can provide multiple-stage outlet control for different control volumes and storm frequencies. These combination outlets may have independent outlet controls, but often outlet structures will share a common outlet. Combination outlets require composite stage-discharge curves based on the hydraulic performance curves of the component outlet structures. The total discharge from the outlets will generally be the summation of its individual outlets, constrained by the capacity of common outlet conduits and possibly tailwater conditions. Figure 6-3 illustrates a typical stage-discharge curve for detention facility outlet works.

6.4.7 Trash Racks and Debris Control

Trash racks and debris control structures can be crucial to the successful operation of a detention facility, especially at it outlet works. Head losses from trash racks can generally be neglected when the clear-opening area of the trash rack is at least four times the clear-opening area of the inlet. Chapter 8 of this Manual provides additional guidance for trash racks and debris control.

6.4.8 Buoyancy

Buoyant forces create uplift forces that can damage detention basin riser structures. Outlet structures shall be anchored properly such that they will withstand buoyant forces. The design engineer shall consider resistance to buoyant forces both for the anchoring of the system as a whole and for major connecting components (e.g., band couplings) of the outlet structure. The design condition shall assume maximum design water surface elevation in the basin with no water inside the outlet structure (see Section 3.2.8 for buoyancy calculation conditions).

6.5 REFERENCES

6.5.1 Internet Resources

California Coastal Commission, *http://www.coastal.ca.gov/*

California Department of Fish and Game, *http://www.dfg.ca.gov/*

California Department of Water Resources, Division of Safety of Dams (DSOD), *http://damsafety.water.ca.gov/*

California State Water Resource Control Board, *http://www.swrcb.ca.gov/*

Regional Water Quality Control Board, San Diego Region, *http://www.waterboards.ca.gov/sandiego/*

U.S. Army Corps of Engineers, *http://www.usace.army.mil/*

U.S. Fish and Wildlife Service, *http://www.fws.gov/*

6.5.2 General References

American Society of Civil Engineers. (1993). *Design and Construction of Urban Stormwater Management Systems.* ASCE Manual of Practice No. 77.

Debo, Thomas N. and Andrew J. Reese. (2002). *Municipal Storm Water Management*, Second Edition. New York: CRC Press.

Haestad Methods and S. Rocky Durrans. (2003). *Stormwater Conveyance Modeling and Design*, First Edition. Waterbury, Connecticut: Haestad Press.

U.S. Department of the Interior, Bureau of Reclamation. (1987) *Design of Small Dams*, Third Edition.

U.S. Department of Transportation, Federal Highway Administration (FHWA). (1996). *Urban Drainage Design Manual.* Hydraulic Engineering Circular No. 22.

Virginia Department of Conservation and Recreation. (1999). *Virginia Stormwater Management Handbook*.

Figure 6-1

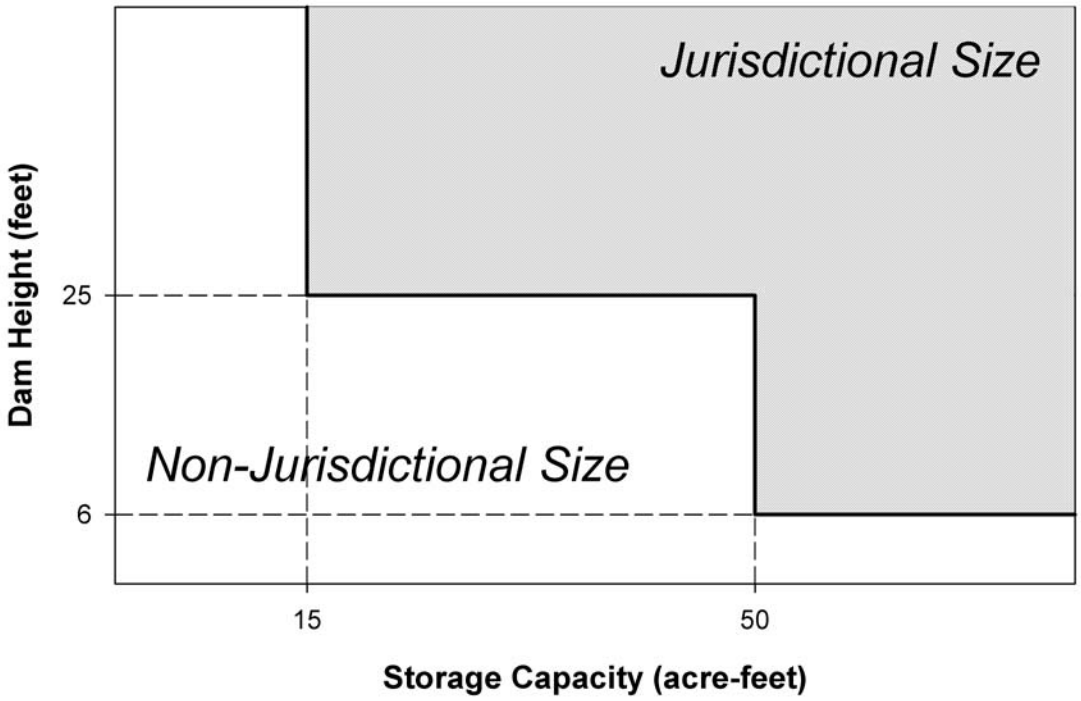

Figure 6-1 California DSOD Jurisdictional Dam Thresholds

Figure 6-2

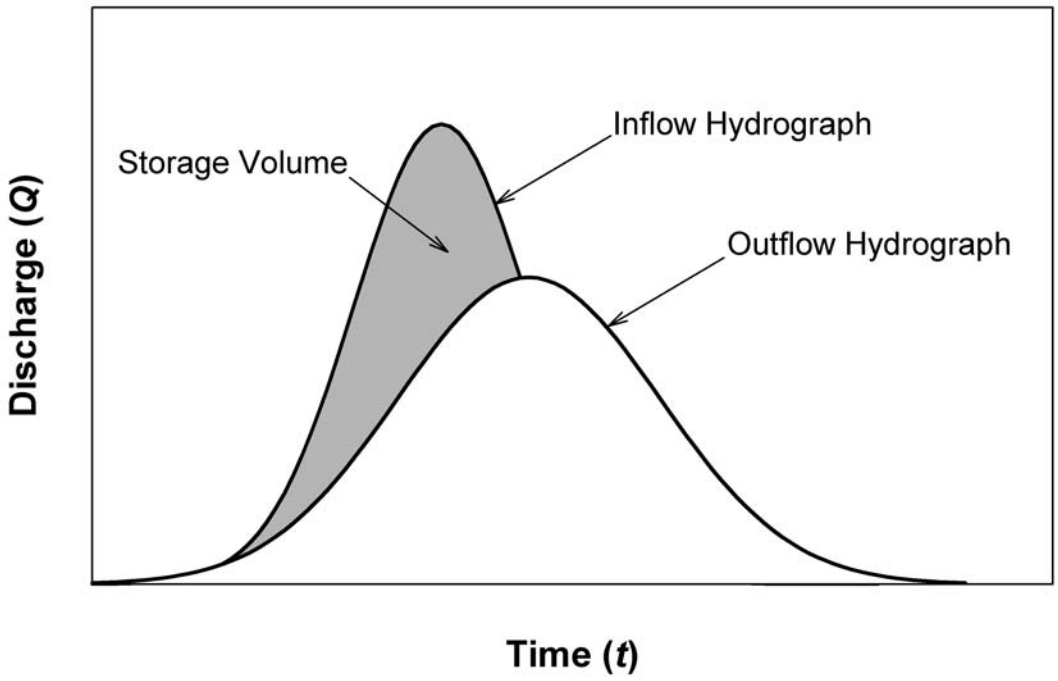

Figure 6-2 Example of Inflow Hydrograph and Outflow Hydrograph

Figure 6-3

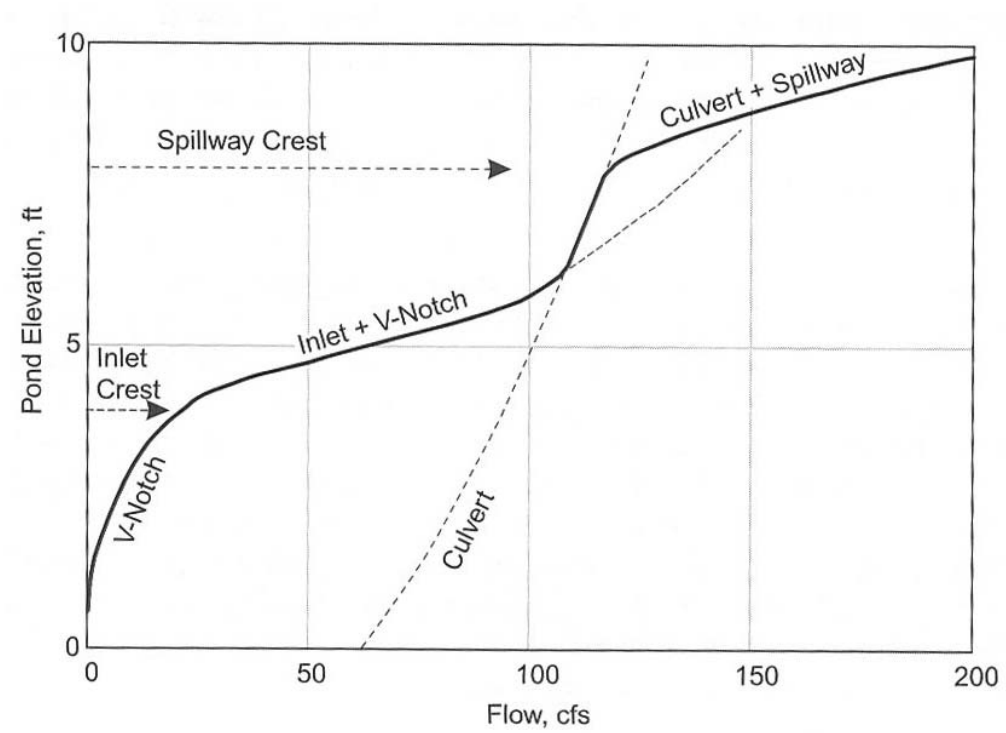

From Haestad and Durrans (2003)

Figure 6-3 Example of Stage-Discharge Curve

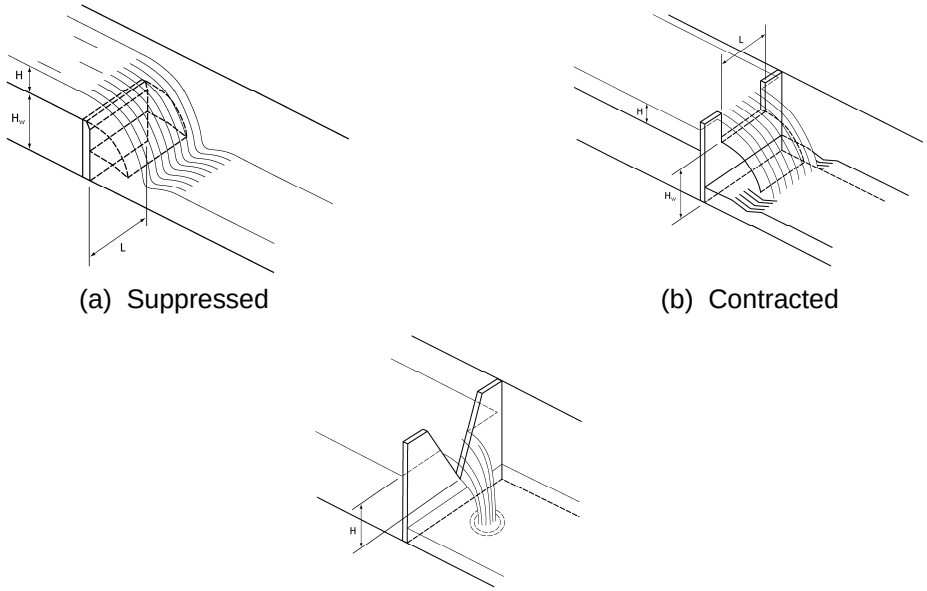

Figure 6-4 Sharp-Crested Weir Configurations

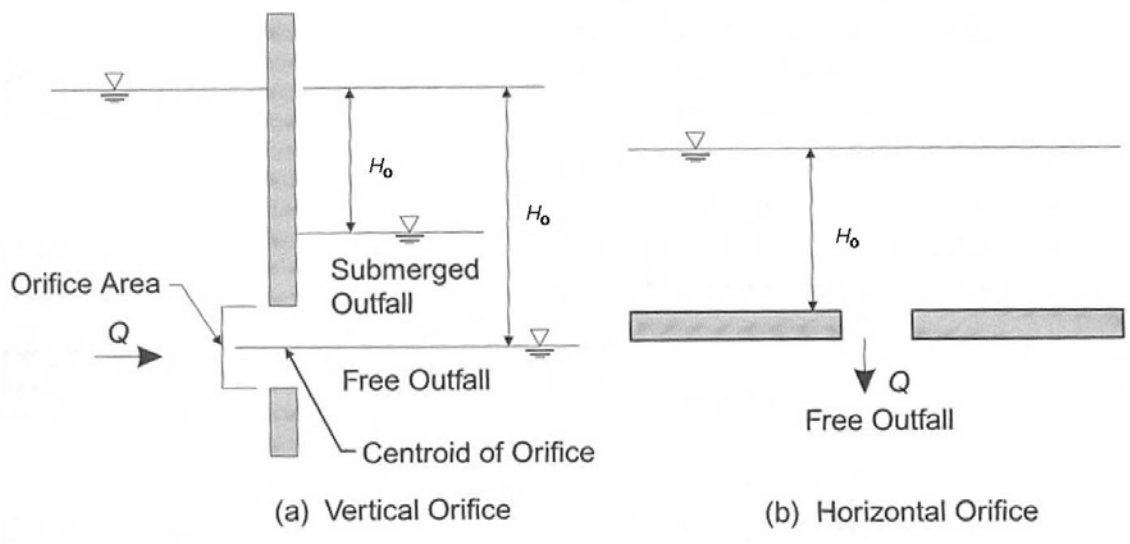

From Haestad and Durrans (2003)

Figure 6-5 Typical Orifice Configurations

Figure 6-6

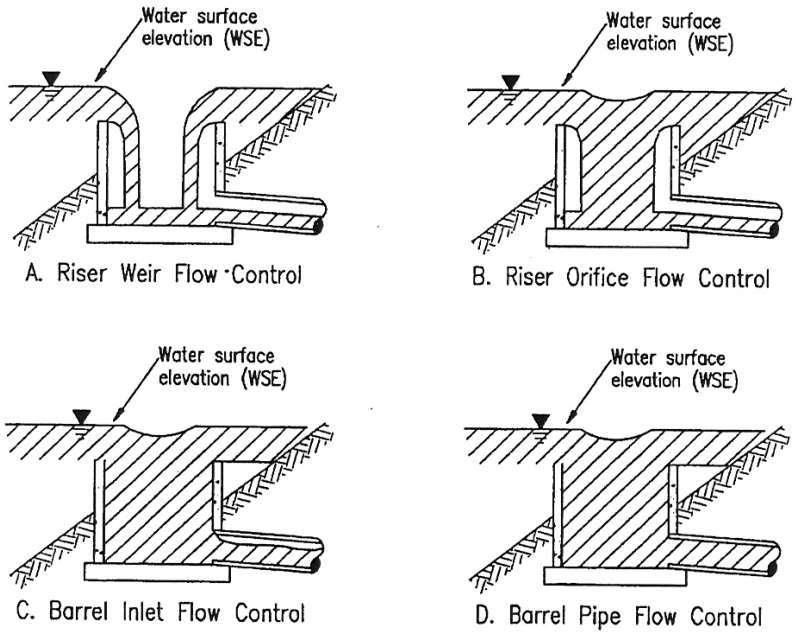

From Virginia DCR (1999)

Figure 6-6 Hydraulic Control Through a Typical Riser Structure

Figure 6-7

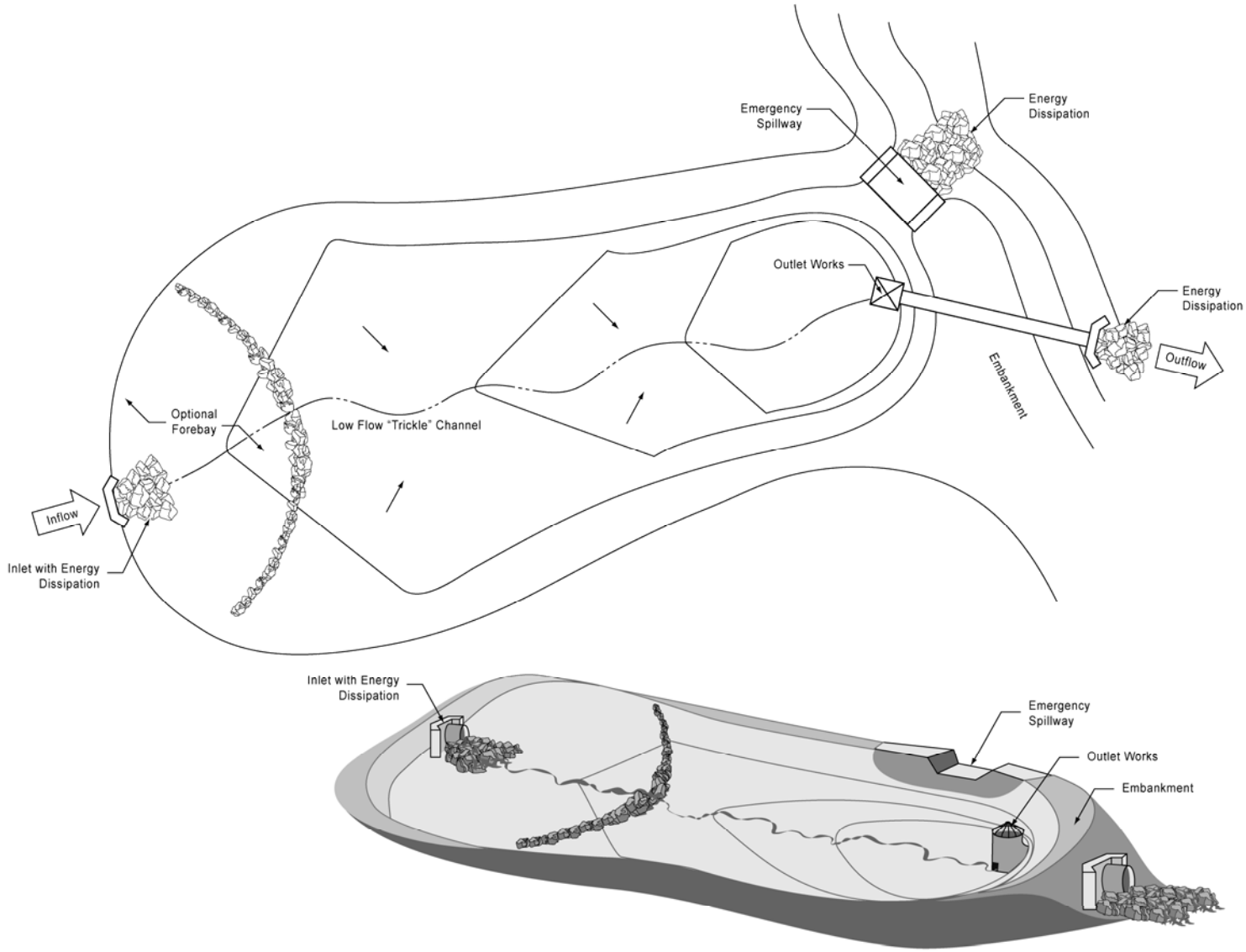

Figure 6-7 Plan and Section of Typical Flood Control Detention Basin

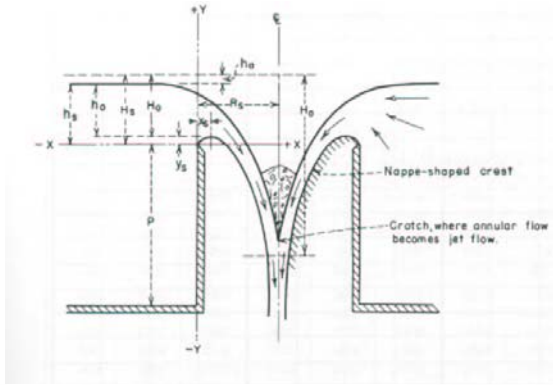

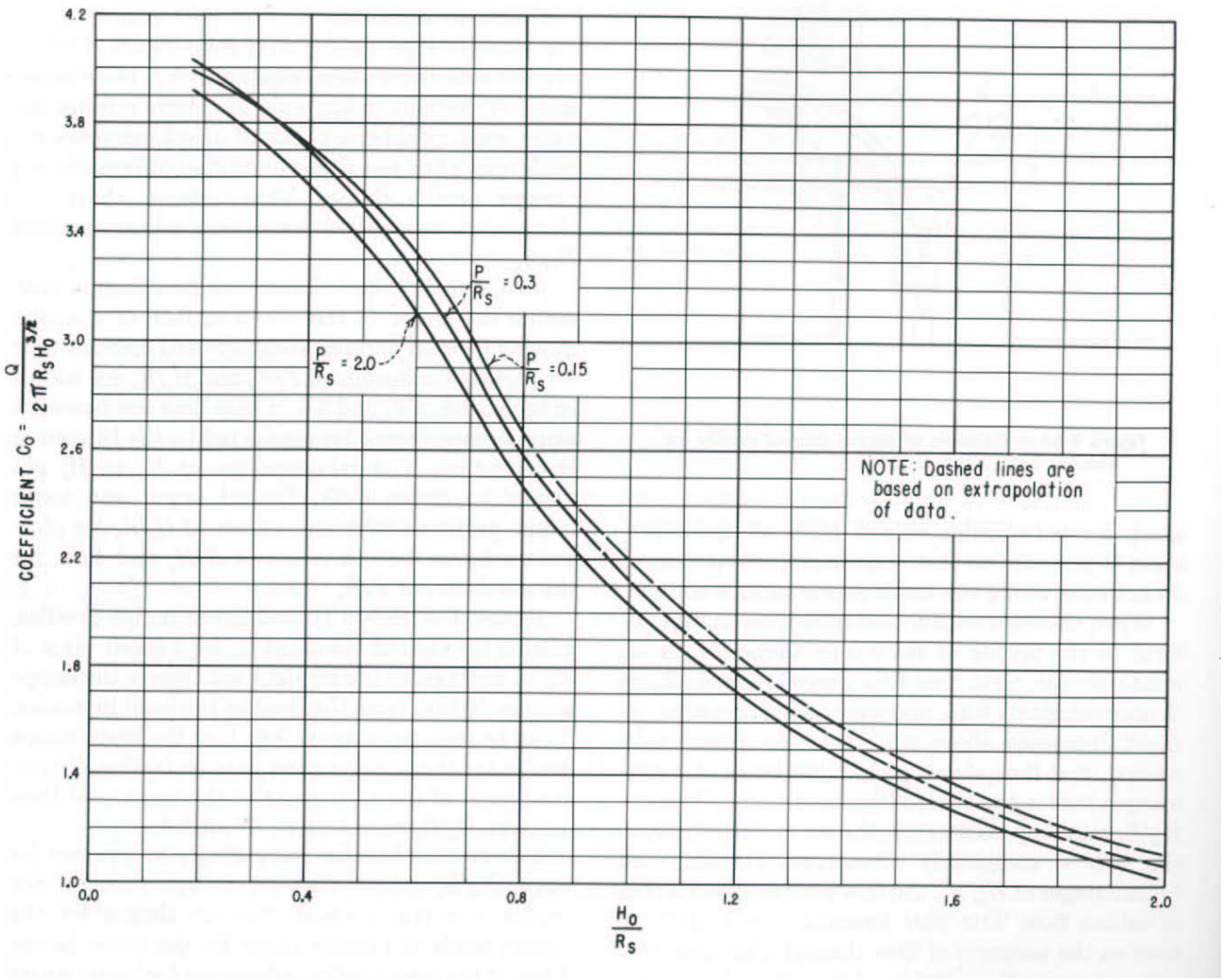

Figure 6-8 Riser Structure Design Nomograph

7 ENERGY DISSIPATION

7.1 INTRODUCTION

The development of a site often results in modifications to drainage characteristics, including increases in peak discharges and velocities of runoff from the property. Storm drain discharges into unlined channels or natural watercourses have the potential to cause erosion. This Chapter focuses on riprap aprons, which are the most common type of energy dissipater, but also summarizes several other methods for energy dissipation. The designer is encouraged to investigate reference sources for further discussion of energy dissipaters.

7.2 GENERAL DESIGN CRITERIA

Energy dissipation is required when a project increases the exit velocity and turbulence at a conduit outlet above the existing (pre-project) condition. However, if the velocity does not have the potential to be erosive, energy dissipation is not required. Energy dissipation may also be required when a project proposes to concentrate surface runoff into discrete discharge points (i.e. concentrating sheet flow and discharging into a stream via a down-drain, etc.). Energy dissipation shall reduce the velocity to non-erosive levels where practical, and shall be designed to handle the same design event as the storm drain, culvert, or other facility immediately upstream.

7.3 HYDRAULIC DESIGN

Selection of the most appropriate energy dissipater for use on a project site requires the consideration of a number of factors. In addition to the hydraulic parameters, the designer needs to consider safety factors, the potential for rock removal, economic feasibility, and other factors. For instance, the design engineer might specify a larger stone size or grouted riprap to prevent stones from being carried away by vandals. When energy dissipaters are used on a project, the designer shall submit design specifics with their drainage report.

Many structural devices can be used to provide energy dissipation. This Manual discusses some of the more common types that are applicable to a wide range of situations. The designer shall carefully consider the project requirements prior to using any of the following devices. If the project requires an energy dissipater that is not listed by this Manual, the designer shall contact the local governing agency prior to proceeding with design. This will enable the local governing agency and designer to coordinate design, submittal, inspection, and maintenance requirements. For the purposes of evaluating scour potential at an outlet structure, the engineer shall use the higher of the two velocities calculated by assuming critical and normal depth at the outfall.

7.3.1 Riprap Aprons

There are a number of methods available to determine the size of rock riprap aprons at a storm drain outfall. This Manual discusses the San Diego Regional Standard Drawing No. D-40 and City of San Diego Supplemental Standard Drawing No. SDD-100. Other methodologies are also available, such those developed by the U.S. Army Corps of Engineers and the U.S.D.A. Soil Conservation Service (now the Natural Resource Conservation Service). These methods are also acceptable when applied appropriately. Because of the empirical nature of many of the methods and their focus on particular situations, the designer must consider any method's applicability to the design situation.

Riprap apron energy dissipation shall conform to San Diego regional design standards (Standard Drawing No. D-40 and Supplemental Standard Drawing No. SDD-100) when reasonable. However, the lengths determined by regional standards are sometimes insufficient to reduce the velocities to non-erosive or pre-project levels. In these cases, the engineer shall apply a reasonable design procedure to determine an appropriate riprap design.

7.3.1.1 San Diego Regional Standard Drawing

Apron Length and Width. Riprap apron length and width are a function of the diameter or vertical dimension of the outlet pipe or culvert. The apron length shall be determined using the following equation, with a minimum length of 10 feet:

$$L_a = 4D_O \qquad (7\text{-}1)$$

where …

L_a = minimum riprap apron length (ft); and

D_o = diameter or width of culvert or storm drain (ft).

Where there is a well-defined channel downstream of the apron, the bottom width of the riprap apron shall be at least equal to the bottom width of the channel. The riprap apron shall extend at least one foot above the maximum tailwater elevation or the computed water surface elevation, whichever is greater. The side slopes of the riprap apron shall be 3H:1V whenever practical, but in no case be steeper than 1.5H:1V.

Where there is no well-defined channel downstream of the apron, the upstream width of the riprap apron shall be equal to twice the width of conduit or the width of the headwall, whichever is greater. The downstream width of the riprap apron shall be at least the width of the upstream end of the apron, plus one conduit diameter (D_o) on each side. Figure 7-1 illustrates the layout of the San Diego regional standard riprap apron.

Riprap Size and Thickness. Flow energy governs the size of the riprap used for energy dissipation. The San Diego Regional Standard Drawings use exit velocity as a surrogate for flow energy (Table 7-1). Riprap apron thickness shall be at least 1.5 times the nominal d_{50} of the specified riprap. Riprap shall be placed over a geotextile filter fabric, and a filter blanket material shall be placed under the fabric as appropriate. The equivalent diameter of stone (d_{50}) shall not exceed the diameter or vertical dimension of the outlet pipe, and the dimensions of the riprap apron shall be adjusted to accommodate the required stone size.

Table 7-1 Rock Size for Riprap Aprons at Storm Drain Outlets

Outlet Velocity (ft/s)	Rock Classification	Size of Stone, d_{50} (ft) [(a)]
6-10	No. 2 Backing	0.7
10-12	¼ Ton	1.8
12-14	½ Ton	2.3
14-16	1 Ton	2.9
16-18	2 Ton	3.6

[(a)] Assumes specific weight of 165 lb/ft^3. The designer shall take care to apply a unit weight that is applicable to the type of riprap specified for the project, and adjust their calculations if necessary.

7.3.2 Stilling Basins

There are a number of additional types of stilling basins, and it is beyond the scope of this Manual to provide detailed information on each of them. Information about their proper

application and design can be obtained from a number of sources, including the FHWA *Hydraulic Design of Energy Dissipaters for Culverts and Channels* (HEC-14), the U.S. Army Corps of Engineers' *Hydraulic Design Criteria* and *Engineer Manuals*, the Bureau of Reclamation's *Design of Small Canal Structures*, and other references. The use of riprap, SAF, and CSU stilling basins are allowed, subject to the approval of the governing agency.

7.3.3 Dissipater Rings

The use of dissipater rings in pipes and culverts can be an efficient manner to reduce exit velocities. FHWA HEC-14 provides a complete discussion of their use and design. Dissipater rings shall be modified to facilitate drainage behind the rings and prevent ponding within the culvert. The use of dissipater rings is limited to urban applications where velocities within the pipe are 20 fps and greater and where no significant bedloads are anticipated, or where other methods of energy dissipation are impracticable.

7.3.4 Impact Structure (SD-RSD No. D-41)

Design standards for the impact structure (also known as impact basin or stilling basin) depicted on San Diego Regional Standard Drawing No. D-41 are based on the USBR Type VI Basin. The original USBR basin has been modified to allow drainage of the basin during dry periods, which enhances the usefulness of the basin in urban environments. The width of D-41 is based on discharge from the storm drain or culvert; this width must be specified on drawings. Refer to Sections 7.3.1 and 7.3.2 for information on design standards for rip-rap aprons, also known as rock energy dissipaters, and stilling basins, respectively.

Figure 7-2 (FHWA HEC-14, 1983) provides a nomograph that may be used to estimate the energy loss through an impact structure. This energy loss can then be used to estimate the flow velocity exiting the impact structure. The energy loss through the structure is a function of the Froude Number of the flow entering the impact basin, calculated in this case as:

$$FR = v_O \Big/ \sqrt{g y_e} \qquad (7\text{-}2)$$

$$y_e = \sqrt{A/2} \qquad (7\text{-}3)$$

$$H_O = y_e + \frac{v_O^2}{2g} \qquad (7\text{-}4)$$

where …

FR	=	Froude Number of flow entering the impact structure;
v_O	=	velocity of flow entering the dissipater (ft/s);
g	=	gravitational acceleration (32.2 ft/s^2); and
y_e	=	equivalent depth of flow entering the dissipater, (ft)
A	=	area of flow entering the dissipater (ft^2); and
H_O	=	kinetic energy of flow entering the dissipater (ft).

To determine the energy loss in a stilling or concrete energy dissipater (impact basin), the Froude Number (FR) and the kinetic energy (Ho) for the flow entering the basin are calculated using Equations 7-3 and 7-4 respectively. The Froude Number is plotted on the bottom of Figure 7-2 and a vertical line drawn to the appropriate curve. A horizontal line is then drawn from the curve to the vertical axis to determine the percentage HL/Ho. For the RSD D41 concrete energy dissipater the "Impact Basin" curve is used. For other stilling basins, USBR Types II, III, and IV, the "Hydraulic Jump Horizontal Floor" curve is used.

Information on the original hydraulic design reference can be found in the *Hydraulic Design of Stilling Basins for Pipe or Channel Outlets* (Peterka, 1984). The designer is encouraged to use the design guidelines contained within the Regional Standard Drawings.

7.4 REFERENCES

Bradley, J.N. and Peterka, A.J. (1957). "Hydraulic design of stilling basins." Journal of the Hydraulics Division, American Society of Civil Engineering **83**(5), 1–15.

California Department of Transportation (Caltrans). (June 1996). *California Bank and Shore Rock Slope Protection Design, Practitioner's Guide and Field Evaluation of Riprap Methods.* FHWA-CA-TL-95-10/Caltrans Study No. F90TL03.

U.S. Department of Transportation, Federal Highway Administration (FHWA). (1983). *Hydraulic Design of Energy Dissipators for Culverts and Channels.* Hydraulic Engineering Circular No. 14. FHWA Publication No. EPD-86-110. Washington, D.C.

U.S. Army Corps of Engineers. (1970). *Storm Drain Outlets, Riprap Energy Dissipators*. Hydraulic Design Criteria 722-4 to 722-7. Washington, D.C.

U.S. Army Corps of Engineers. (July 1, 1991). *Hydraulic Design of Flood Control Channels*. Engineer Manual EM 1110-2-1601. Washington, D.C.

U.S. Department of Interior, Bureau of Reclamation. (1978). *Design of Small Canal Structures*. Denver, Colorado.

Figure 7-1

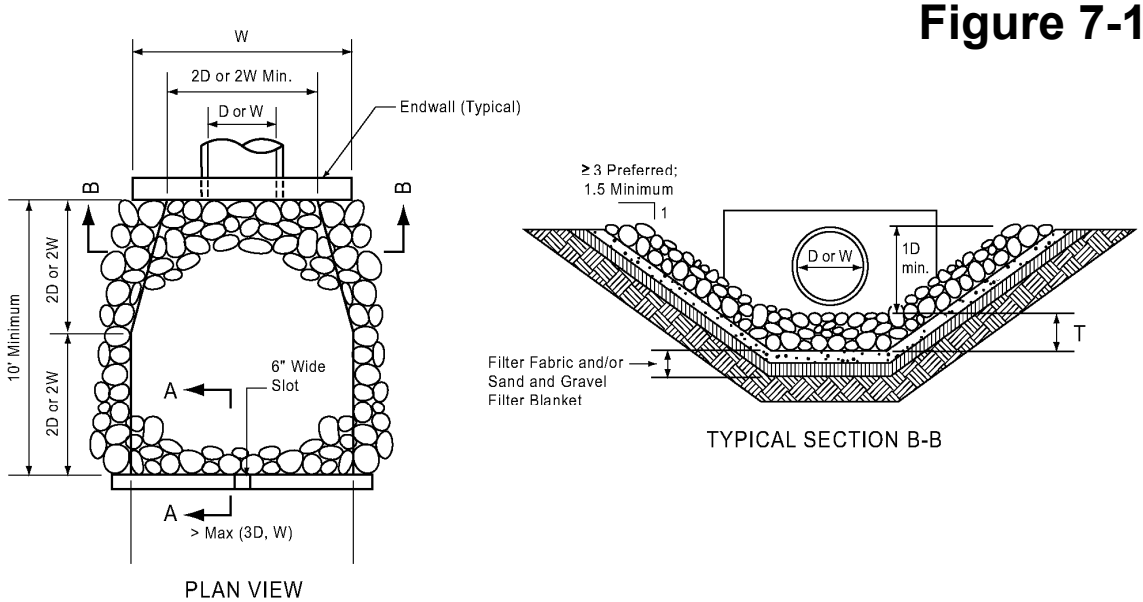

Figure 7-1 San Diego Regional Standard Rock Riprap Apron Layout

Figure 7-2

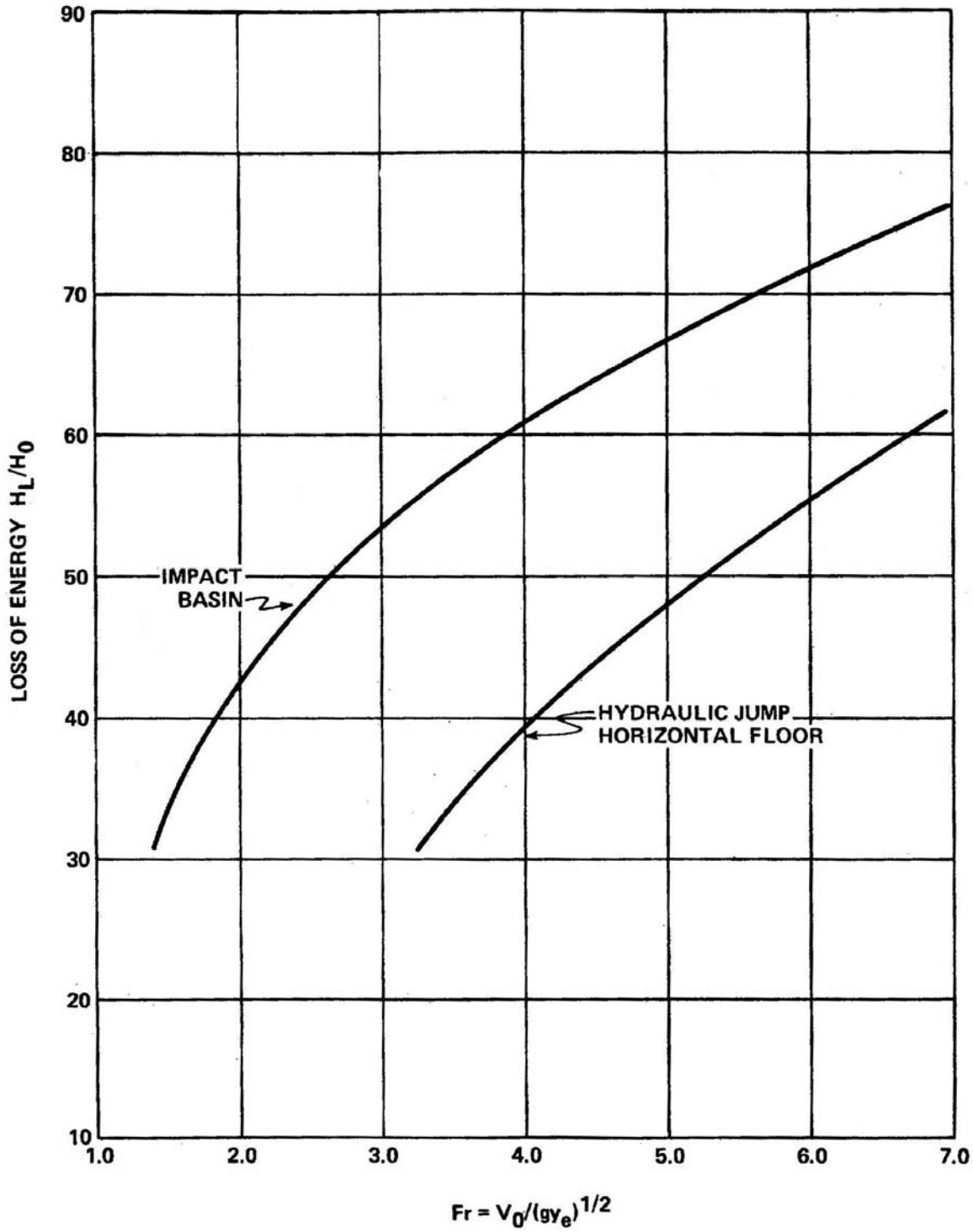

Figure 7-2 Impact Basin Energy Loss Nomograph

8 DEBRIS BARRIERS AND BASINS

8.1 INTRODUCTION

The use of trash racks and other barriers to protect culverts and underground pipes should be carefully considered on a case-by-case basis. Properly used debris barriers/basins prevent clogging and associated flooding; improperly used, they may curtail the conveyance capacity of a culvert or channel and increase flood risk.

8.2 GENERAL DESIGN CRITERIA

The purpose of debris basins and barriers is to reduce the potential for debris clogging channels, pipes, and culverts. When flows are likely to convey rock or other debris in sufficient size and volume to block or obstruct a culvert, some form of debris barrier or basin shall be used where necessary.

Debris basins and other debris facilities require perpetual maintenance to assure proper function. All debris facilities shall have an operation and maintenance plan that specifies regular inspection and maintenance at specific time intervals and/or maintenance "indicators" when maintenance activity will be triggered. Operation and maintenance plans shall ensure that vegetation and debris are removed or maintained on a regular basis to maintain the function of the facility.

The project owner and design engineer shall consult the governing agency for determination of the appropriate maintenance mechanism required for a particular project. At a minimum, privately owned and maintained debris facilities shall have a recorded easement agreement with a covenant binding on successors or other mechanism acceptable to the governing agency. Typically, the easement will cover the debris basin or an area around the debris barrier sufficient to provide adequate access and maintenance.

8.3 HYDRAULIC DESIGN OF DEBRIS BASINS AND BARRIERS

Several types of structures might be used to reduce the effect of debris on culverts and pipes. The first step in selecting the appropriate debris control device is to categorize the type of debris inflow. The U.S. Department of Transportation (USDOT, 1971) has developed the following classification of debris:

- Light floating debris – small limbs or sticks, orchard prunings, tules, and refuse
- Medium floating debris – limbs or large sticks
- Large floating debris – logs or trees
- Flowing debris – heterogeneous fluid mass or clay, silt, sand, gravel, rock, refuse, or sticks
- Fine detritus – fairly uniform bedload of silt, sand, gravel more or less devoid of floating debris, tending to deposit upon diminution of velocity
- Coarse detritus – coarse gravel or rock fragments carried as channel bedload at flood stage

Table 8-1 shows a matrix of commonly used structures and their generally acceptable use depending on expected debris characteristics. The following sections provide a general discussion of some of these structures.

Table 8-1 Classification of Debris

Debris Classification	Type of Structure: Debris Deflector	Debris Rack	Debris Riser	Debris Crib	Debris Basin and Dam
Light Floating Debris		X		X	
Medium Floating Debris	X	X			
Heavy Floating Debris	X				
Flowing Debris			X		X
Fine Detritus			X		X
Coarse Detritus			X	X	X
Boulders	X				

Where there is potential for debris production in the upstream watershed and where there are bridge piers or other obstructions in the channel, the engineer should consider the reduction in hydraulic capacity caused by the accumulation of debris on the obstruction. In absence of other analytical methods the engineer should assume an additional 2 feet of debris build up on each side of the obstruction for a total of 4 feet of additional width. Other documented methods may be used subject to approval by the governing agency.

8.3.1 Debris Racks

Debris racks provide a physical barrier across the upstream face of channels or culverts. Debris racks vary greatly in size and materials. Many factors influence the design of debris racks, including: (1) the size and type of debris; (2) the size of culvert or structure being protected; (3) the amount of flow; and (4) flooding issues.

Debris racks shall typically have an open area equivalent to approximately four times the flow area of the conduit or channel they are protecting to maintain flow conveyance and reduce head loss. The height of the rack shall typically extend above the expected depth of flow under the design storm. The design engineer shall consider the use of sloped racks to reduce the risk of pinning debris where applicable. Debris racks shall be well-secured but removable for the purposes of maintenance. The California Standard Specifications for Public Works Construction or “Greenbook” Standard Plan No. 361-0 offers details and specifications for a typical trash rack. Maintenance access to the debris rack is critical and must be provided. Access can take the form of an easement, public trail, or road. Finally, the design engineer shall specify debris racks only when special circumstances warrant their use.

8.3.2 Debris Posts

A debris post is a structural system of posts placed upstream of a culvert entrance causing debris to deposit before entering the culvert. The design engineer shall specify debris posts only when special circumstances warrant their use.

The posts shall be a minimum of 4 inches in diameter and are usually constructed of metal embedded in a concrete base. Posts are typically spaced at 1/3 of the culvert diameter to a maximum of 24 inches, and are placed upstream of the culvert entrance a distance of twice the culvert diameter where practicable.

The posts shall be designed assuming the barrier to be 100 percent effective in blocking the flow; the barrier will therefore act as a submerged sharp-crested weir with a height equivalent to the height of the debris posts. The design engineer must check that the water elevation spilling over the top of the weir will continue to flow towards the culvert and not flood the surrounding area.

Debris posts shall be embedded to a depth adequate to resist hydrostatic pressures and help prevent failures due to scour. San Diego Regional Standard Drawing No. D-82 provides a standard detail for debris barrier with an embedment depth that is appropriate for most typical applications. The Los Angeles Department of Public Works (1979) provides an equation for embedment depth that may be used when necessary due to special conditions such unusually high anticipated debris loads. The design engineer shall compare the embedment depth to the potential local scour depth near the debris posts and culvert entrance, and specify an appropriate embedment depth based on these values.

8.3.3 Permanent Desiltation Basins

Permanent desiltation basins are typically used to prevent siltation of downstream culverts or channels. The design engineer shall specify permanent desiltation basins only when special circumstances warrant their use.

Temporary desiltation basins used to control sediment generated during construction activities have special design requirements that are not addressed in this Manual. For information on designing temporary construction desiltation basins, the design engineer is encouraged to review the most recent State of California NPDES Permit dealing with storm water discharges associated with construction activities and the governing agency's storm water standards.

The design of permanent desiltation basins to prevent downstream sediment deposition from sources other than construction activities relies on a number of factors. The design engineer shall consider maintenance requirements during design. Vehicular access is a requirement for all basins (access can be in the form of a public road, easement, or other mechanism suitable to the governing agency). The design engineer is encouraged to consider the remoteness of a particular basin; this factor may make a larger basin requiring less frequent maintenance more practical than a smaller basin requiring maintenance that is more frequent.

The design engineer shall submit calculations demonstrating the inflow of sediment to the basin. A number of methods may be used to calculate sediment volumes, specifically the Flaxman Method, Corps of Engineers' *Los Angeles District Method for the Prediction of Debris Yield* (2000), and the Modified Universal Soil Loss Equation (MUSLE). The design engineer shall obtain agency approval prior to using other methods.

Permanent desiltation basins must drain within 96 hours and have a spillway capable of conveying the peak design flow without overtopping the basin. Desiltation basins falling under State jurisdiction (see Chapter 6, "Detention Basin Design") are typically not allowed. The design calculations shall include the maximum allowable sediment level within the basin. All

flood routing and outlet calculations shall be performed according to Chapter 6, Detention Basin Design.

8.3.4 Debris Basins

The use of debris basins is sometimes necessary to capture heavy debris loads, including large boulders. Typically, debris basins serve regional areas as opposed to specific developments or lots. While the design of debris basins is similar to that of desiltation and detention basins, the larger debris volumes and the potential for large rocks increase the importance of proper design. A detailed discussion of predicting debris yield and the design of debris basins is outside the scope of this Manual. The design engineer may consult one of the many references for debris yield calculation methods, including the Corps of Engineers' *Los Angeles District Method for Prediction of Debris Yield* (2000) or the Los Angeles County Department of Public Works' *Sedimentation Manual* (1993) for more information. Because of the potential for debris basins to affect numerous properties, the design engineer shall contact the governing agency prior to beginning design to coordinate the design criteria, submittal requirements, and any legal/regulatory issues.

8.4 REFERENCES

American Public Works Association and Associated General Contractors of Southern California (APWA-AGC). (2000). California Standard Specifications for Public Works Construction. 12th Edition.

Los Angeles County Department of Public Works. (June 1993). Sedimentation Manual.

Los Angeles County Flood Control District. (October 1979). Debris Dams and Basins Design Manual.

U.S. Army Corps of Engineers. (2000). Los Angeles District Method for Prediction of Debris Yield.

U.S. Department of Transportation, Federal Highways Administration. (1971). Debris Control Structures. Hydraulic Engineering Circular No. 9. FHWA Publication No. EPD-86-106. Washington, D.C.

APPENDIX A — MANNING ROUGHNESS COEFFICIENTS

The Manning roughness coefficient (n) is used to represent flow resistance in open-channel hydraulic computations. This Appendix offers a compilation of Manning roughness coefficients that may be used in the hydraulic design and evaluation of drainage facilities.

These values serve only as a basic guide. The procedure for selecting appropriate values for Manning roughness coefficient, especially in natural channel systems, is subjective and requires judgment and skill that is primarily developed through experience. For work where very accurate determination of water surface profile is necessary, the design engineer should consult the governing agency to obtain data regarding roughness coefficient values applicable to specific streams. The design engineer may also examine Flood Insurance Study data, or one of several references for more specific information on determining roughness coefficient. Refer to Chapter 5 for more detailed information on Manning roughness coefficients.

References

Barfuss, Steven and J. Paul Tullis. (1994). Friction factor test on high density polyethylene pipe. Hydraulics Report No. 208. Utah Water Research Laboratory, Utah State University. Logan, Utah.

Barnes, H.H. (1964). *Roughness Characteristics of Natural Channels*. U.S.G.S. Water Supply Paper No. 1849.

Chow, Ven Te. (1959). *Open Channel Hydraulics*. New York: McGraw-Hill.

Federal Highway Administration. (1988). *Design of Roadside Channels with Flexible Linings.* Hydraulic Engineering Circular No. 15 (HEC-15). U.S. Department of Transportation, Washington D.C.

Federal Highway Administration. (1996). *Urban Drainage Design Manual.* Hydraulic Engineering Circular No. 22 (HEC-22). U.S. Department of Transportation, Washington D.C.

Federal Emergency Management Agency. (2002) Flood Insurance Study for San Diego County. Community No. 06073.

Phillips, J.V., and Ingersoll, T.I. (1997). Comparison of verified roughness coefficients for gravel-bed stream in central Arizona with other areas of the western United States in Floodplain Management. Proceedings of 21st Annual Conference of the Association State Floodplain Managers. Little Rock, Arkansas, April 28-May 2, 1997. pages 154-158.

Thomsen, B.W., and H.W. Hjalmarson. (1991). Estimated Manning's roughness coefficients for stream channels and flood plains in Maricopa County, Arizona. Phoenix, Arizona: Flood Control District of Maricopa County.

[THIS PAGE INTENTIONALLY LEFT BLANK]

Table A-1 Average Manning Roughness Coefficients for Pavement and Gutters[1]

Concrete Gutter[2]	0.015
Concrete Pavement	
Float Finish	0.014
Broom Finish	0.016
Concrete Gutter with Asphalt Pavement	
Smooth Finish	0.013
Rough Texture	0.015
Asphalt Pavement	
Smooth Finish	0.013
Rough Texture	0.016

Based on FHWA HEC-22.

[1] Based on materials and workmanship required by standard specifications.
[2] Increase roughness coefficient in gutters with mild slopes where sediment might accumulate by 0.020.

Table A-2 Average Manning Roughness Coefficients for Closed Conduits[3]

Reinforced Concrete Pipe (RCP)	0.013
Corrugated Metal Pipe and Pipe Arch	
2-3/8 x 1/2 inch Corrugations	
Unlined	0.024
Half Lined	
Full Flow	0.018
d/D>=0.60	0.016
d/D<0.60	0.013
Fully Lined	0.013
3 x 1 inch Corrugations	0.027
6 x 2 inch Corrugations	0.032
Spiral Rib Pipe	0.013
Helically Wound Pipe	
18-inch	0.015
24-inch	0.017
30-inch	0.019
36-inch	0.021
42-inch	0.022
48-inch	0.023
Plastic Pipe (HPDE and PVC)	
Smooth	0.013
Corrugated	0.024
Vitrified Clay Pipe	0.014
Cast-Iron Pipe (Uncoated)	0.013
Steel Pipe	0.011
Brick	0.017
Cast-In-Place Concrete Pipe	
Rough Wood Forms	0.017
Smooth Wood or Steel Forms	0.014

[3] Based on materials and workmanship required by standard specifications.

Table A-3

Table A-3 Average Manning Roughness Coefficients for Small Open Channels Conveying Less than 50 cfs[4]

	Design Flow Depth		
Lining Type	**0 – 0.5 ft**	**0.5 – 2.0 ft**	**> 2.0 ft**
Concrete (Poured)	0.015	0.013	0.013
Air Blown Concrete	0.023	0.019	0.016
Grouted Riprap	0.040	0.030	0.028
Stone Masonry	0.042	0.032	0.030
Soil Cement	0.025	0.022	0.020
Bare Soil	0.023	0.020	0.020
Rock Cut	0.045	0.035	0.025
Rock Riprap	Based on Rock Size (See Section 5.7.2)		

Table A-4

Table A-4 Average Manning Roughness Coefficients for Larger Open Channels

Unlined Channels	
Clay Loam	0.023
Sand	0.020
Lined Channels	
Grass Lined (Well-Maintained)	0.035
Grass Lined (Not Maintained)	0.045
Wetland-Bottom Channels (New Channel)	0.023
Wetland-Bottom Channels (Mature Channel)	See Table A-5
Riprap-Lined Channels	See Section 5.7.2
Concrete (Poured)	0.014
Air Blown Mortar (Gunite or Shotcrete)[5]	0.016
Asphaltic Concrete or Bituminous Plant Mix	0.018

For channels with revetments or multiple lining types, use composite Manning roughness coefficient based on component lining materials.

[4] Based on materials and workmanship required by standard specifications.
[5] For air-blown concrete, use n=0.012 (if troweled) and n=0.025 if purposely roughened.

Table A-5

Table A-5 Average Manning Roughness Coefficients for Natural Channels

Minor Streams (Surface Width at Flood Stage < 100 ft)

Fairly Regular Section
- (A) Some Grass and Weeds, Little or No Brush 0.030
- (B) Dense Growth of Weeds, Depth of Flow Materially Greater Than Weed Height 0.040
- (C) Some Weeds, Light Brush on Banks 0.040
- (D) Some Weeds, Heavy Brush on Banks 0.060
- (E) For Trees within Channel with Branches Submerged at High Stage, Increase All Above Values By 0.015

Irregular Section, with Pools, Slight Channel Meander
- Channels (A) to (E) Above, Increase All Values By 0.015

Mountain Streams; No Vegetation in Channel, Banks Usually Steep, Trees and Brush along Banks Submerged at High Stage
- (A) Bottom, Gravel, Cobbles and Few Boulders 0.050
- (B) Bottom, Cobbles with Large Boulders 0.060

Flood Plains (Adjacent To Natural Streams)

Pasture, No Brush
- (A) Short Grass 0.030
- (B) High Grass 0.040

Cultivated Areas
- (A) No Crop 0.040
- (B) Mature Row Crops 0.040
- (C) Mature Field Crops 0.050

Heavy Weeds, Scattered Brush 0.050

Light Brush and Trees 0.060

Medium To Dense Brush 0.090

Dense Willows 0.170

Cleared Land with Tree Stumps, 100-150 Per Acre 0.060

Heavy Stand of Timber, Little Undergrowth
- (A) Flood Depth below Branches 0.110
- (B) Flood Depth Reaches Branches 0.140

APPENDIX B — PIPE MATERIAL

B.1 REINFORCED CONCRETE PIPE (RCP)

- At minimum, RCPs shall be manufactured of Type II Portland cement (see Table B-1). Type II Portland cement shall conform to ASTM C-150, with the following modifications:
  - Cement shall not contain more than 0.6 percent by weight alkalis, calculated as the percentage of Na_2O plus 0.658 times the percentage of K_2O, determined by either direct intensity flame photometry or the atomic adsorption method (per ASTM C-114).
  - Autoclave expansion shall not exceed 0.5 percent.
  - Mortar containing Portland cement and sand shall not expand in water more than 0.01 percent and shall not contract in air more than 0.048 percent.
- Type V Portland cement shall conform to ASTM C-150, with the modifications listed above for Type II Portland cement.
- Values for the soluble sulfate content of the proposed backfill, watershed soil, or runoff shall be provided when the soil resistivity measures less than 3000 ohm-cm.
- Use of porous concrete pipe with shell thickness of 1 inch or less is not advisable when soil or backfill pH is below 6.5.
- Protective coatings (e.g., coal tar or epoxy) shall be used when soil or backfill pH is below 5.5.
- Minimum cover for RCP shall be 2 ft when placed under unpaved areas or under flexible pavement or under flexible pavement.
- Minimum cover for RCP shall be 1 ft when placed under rigid pavements.
- Minimum pipe strength shall be determined by pipe diameter and depth of cover, with appropriate accounting for backfill placement method, as described in Table B-2.

B.2 CAST IN PLACE CONCRETE PIPE (CIPP)

Table B-1 RCP Class and Recommended Usage

	Diameter (inches)	Cracking D-Load	FHWA Use
Class I	60 – 108	800-D	Not adequate for highway uses.
Class II	12 – 108	1000-D	Use outside roadbed under moderately low depths of cover. Class II is required for pipe shaft manholes and drop inlets.
Class III	12 – 108	1350-D	Intended for normal culvert and storm drain uses.
Class IV	12 – 84	2000-D	Same as Class III, but will sustain higher over-fills
Class V	12 – 72	3000-D	High-strength pipe for sever loading conditions.

Cast in place concrete pipe construction shall conform to San Diego Standard Specifications ACI Standard 346-70, Standard Specifications for non-reinforced concrete pipe and Section 63 Caltrans Standard Specifications modified as follows:

1. The County of San Diego shall provide continuous field inspection on this project, or as otherwise required.
2. A soils engineer certificate shall be submitted certifying that the trench walls are able to stand vertically for the required heights and that the water tables in the trenches are below the bottom of the trench or the trench can be dewatered to allow construction, and the water table maximum elevation is enough to preclude future damage to the C.I.P.P.
3. For pipes with slopes less the 1%, the following provisions shall apply:

    a. Grade and Alignment Tolerance

    Departure from and return to established grade shall not exceed 3/8" plus or minus, per ten (10) lineal feet, and the maximum departure limited to ¾" from the theoretical flow line. In no event shall this variation result in ponding in excess of 3/8" deep.

    b. Conformity to Tolerances

    In order to conform to the preceding established flow line tolerances, the Contractor shall be permitted, but not limited to, exercising the following methods of construction; however, the County of San Diego shall have the option of requiring that any or all of these methods of construction be followed:

(i.) Use of laser-directed digging bucket during trench excavation.

(ii.) Use of Patented Canadas-Coulson "Trench Plane" to adjust final trench grade.

(iii.) Use of non-reinforced concrete grade rail to guide the pipe machine during placement of concrete in the pipe.

(iv.) Use of water within the pipe to check the flow line for variations in grade.

    c. General Provisions

    The Contractor, at his sole option, may elect to use, but is not to be limited to any or all of the following methods to restore, or correct flow line to specified tolerances:

(i.) Troweling, floating, screeding, and adding or removing concrete while in a plastic state.

(ii.) Removal of concrete to bring high points to flow line grade shall be permitted.

B.3 METAL PIPE

Use of any metal pipe will require reports covering any or all of the following:

- Watershed soil resistivity and pH values along the proposed pipe alignment.
- Soil resistivity and pH for imported backfill, if any.
- History and present condition of existing conduits in the watershed area, if any.

Metallic culverts on steep grades can present potential problems, particularly in areas with high erosion potential or high bed loading. Material flowing through these facilities at high velocities will cause excessive abrasion of the pipe inverts. Abrasion of the pipe coating or galvanization can accelerate the decomposition of metal through rusting (oxidation). Metallic pipe is not

recommended for culverts with flow in excess of 10 ft/s when high bed load and/or transport of abrasive material is anticipated without application of a protective coating. When protection is warranted, the invert of the pipe (i.e., the bottom 90 degrees of the pipe) shall be protected on all straight-aways, and the invert and walls (i.e., the lower 180 degrees of the pipe) shall be protected on all curves.

B.3.1 Corrugated Aluminum Pipe(CAP)

Corrugated aluminum is recommended for sea water applications, but should not be used when excessive wear from abrasive materials are present or expected in the flow.

- Aluminum alloy conduit may be used where the minimum resistivity of the soil, backfill, and effluent and the pH of the water and soil falls within the ranges specified below:

Resistivity	Acidity (pH)
500 ohm-cm	5.5<pH<8.5
1500 ohm-cm	5.0<pH<5.5 or 8.5<pH<9.0

- Pipe gage shall be selected to achieve minimum design life based upon Figure B-1. Minimum pipe thickness shall be 14 ga. Table B-5 may be used to determine addition service life due to application of protective coatings. For sea water applications, specify the next heavier gage than the gage calculated from Figure B-1.
- Minimum cover shall be 2 ft, or 1 ft below pavement subgrade, whichever is greater.
- Maximum cover shall be 15 ft.
- Neoprene gaskets shall conform to ASTM D-1506.

B.4 CORRUGATED METAL PIPE (CMP)

Corrugated metal pipe conduit is not appropriate for sea water exposure. In cases where a pipe is expected to carry a large amount of debris or abrasive sediment material, it shall have measures to provide sufficient design life for the facility.

- Pipe gage shall be selected to achieve minimum design life based upon Figure B-1. Minimum pipe thickness shall be 14 ga. Table B-5 may be used to determine addition service life due to application of protective coatings.
- When placed under unpaved areas or under flexible pavement, the minimum cover for CMP shall be 2 ft or one-half the pipe diameter ($0.5D_o$), whichever is greater
- When placed under rigid pavements, the minimum cover for CMP shall be 1.2 feet below slab or one-half the pipe diameter ($0.5D_o$), whichever is greater.
- Maximum cover over CMP shall be determined by corrugation type, pipe diameter, and thickness as described in Table B-6 and Table B-7.

B.5 HIGH DENSITY POLYETHYLENE PIPE (HDPE)

B.5.1 General Requirements

- HDPE pipe shall conform to current American Association of State Highway and Transportation Officials (AASHTO). Pipes with a diameter of 4 inches through 36 inches shall conform to AASHTO designation M-294, Type S (Smooth Interior). Pipes with a diameter of 42 inches through 48 inches shall conform to AASHTO designation M-294, Type D.

- The last 16 feet (typically two sections) at each exposed end of a culvert shall be constructed of reinforced concrete pipe (RCP) (Type C is not allowed).
- HDPE is not permitted in areas with running ground water or in areas with unstable trench walls.

B.5.2 HDPE Pipes 48 in Diameter and Smaller

- Pipe shall be backfilled with crushed rock in accordance with City of San Diego Standard Drawing SDD-110, Type C rock envelope, including appropriate filter fabric lining.
- The remainder of the trench shall be backfilled with the specified backfill material compacted to 90 percent Relative Compaction per California Test Method 216, as modified by the County of San Diego or ASTM D-1557, except for the portion in the pavement subgrade, which shall be compacted to 95 percent Relative Compaction.
- Pipe with less than 2 feet of cover under highway loading shall be concrete-encased in accordance with City of San Diego Standard Drawing SDD-110. The portion above the encasement shall be backfilled and compacted in accordance with the paragraph above.
- Maximum pipe cover shall not exceed the amount specified in the current Caltrans Design Manual.

B.5.3 HDPE Pipes Larger than 48 in

- Maximum fill height over the pipe shall not exceed 19.5 ft.
- 54-in and 60-in diameter corrugated HDPE shall be backfilled with concrete, slurry cement, or other "flowable fill material" satisfying Caltrans specifications. At minimum, this backfill shall be brought to a depth equivalent to 3/4 the pipe diameter.
- Trench width shall be a minimum of 1 ft wider than the outside diameter of the pipe on each side, in accordance with Caltrans Standard Specification 19-3.0062.
- Material placed above the level of the concrete backfill shall meet minimum Caltrans requirements for embankment material. Rocks, broken concrete, or other solid materials larger than 3 inches shall not be placed within 1 foot of the pipe. Compaction shall conform to Caltrans Standard Specification Section 19-5.
- When 54-in or 60-in diameter corrugated HDPE pipe is placed under rigid pavement with 3 feet or less of cover, the pipe shall be backfilled with concrete (or equivalent flowable fill material) to a level a minimum of 6 inches above the soffit of the pipe.
- When 54-in or 60-in diameter corrugated HDPE pipe is placed under flexible pavement with between 2 feet and 3 feet of cover, the pipe shall be backfilled with concrete (or equivalent flowable fill material) to a level a minimum of 6 inches above the soffit of the pipe. Pipes with less than 2 feet of cover require concrete backfill Highway Design Manual Index 854.9.

B.6 REFERENCES

City of San Diego. Drainage Design Manual. (April 1984). Document No. 768917.

County of San Diego Department of Public Works. (April 1993). Hydraulic Design and Procedure Manual.

County of San Diego Materials Lab. (2004). Memorandum: Requirements for Utilization of HDPE for Public/Private Improvements and Comments Regarding Metallic Pipe Subject to Scour. Intradepartmental Correspondence. January 14, 2004.

Table B-2 Maximum Height of Cover for RCP

COVER (ft)	RCP DIAMETER	12"	15"	18"	21"	24"	27"	30"	33"	36"	39"	42"	45"	48"	51"	54"	COVER (ft)
	Dead Load	350	309	286	267	254	243	234	227	255	250	244	238	234	230	226	
2.0	Live Load	1393	1323	1306	1281	1262	1248	1236	1226	1219	1125	1044	975	914	860	812	2.0
	Total Load	**1743**	**1632**	**1592**	**1549**	**1516**	**1491**	**1471**	**1454**	**1474**	**1375**	**1289**	**1213**	**1148**	**1090**	**1039**	
	Dead Load	426	377	349	327	311	298	288	280	315	308	301	295	289	284	280	
2.5	Live Load	817	776	766	751	740	732	725	719	719	723	722	715	670	631	595	2.5
	Total Load	**1243**	**1153**	**1115**	**1079**	**1052**	**1031**	**1014**	**1000**	**1034**	**1031**	**1024**	**1010**	**960**	**915**	**876**	
	Dead Load	497	441	410	385	366	352	340	331	373	365	358	349	344	337	333	
3.0	Live Load	515	490	483	474	467	462	457	454	454	456	456	453	453	451	451	3.0
	Total Load	**1013**	**931**	**893**	**859**	**834**	**814**	**798**	**785**	**827**	**822**	**814**	**803**	**797**	**789**	**784**	
	Dead Load	629	560	523	493	470	453	439	427	485	475	466	456	448	441	435	
4.0	Live Load	312	296	293	287	283	280	277	275	275	276	276	274	274	273	273	4.0
	Total Load	**942**	**857**	**816**	**780**	**753**	**733**	**716**	**703**	**760**	**752**	**742**	**730**	**723**	**714**	**709**	
	Dead Load	747	668	626	592	566	546	531	518	590	580	569	557	549	539	533	
5.0	Live Load	220	209	206	202	199	197	195	194	193	194	194	193	193	192	192	5.0
	Total Load	**968**	**878**	**832**	**794**	**766**	**744**	**726**	**712**	**784**	**775**	**763**	**751**	**742**	**732**	**726**	
	Dead Load	853	765	720	682	655	633	616	603	690	679	667	654	644	634	627	
6.0	Live Load	164	155	153	150	148	147	145	144	144	145	145	144	144	143	143	6.0
	Total Load	**1017**	**921**	**874**	**833**	**803**	**780**	**762**	**747**	**835**	**824**	**812**	**798**	**789**	**778**	**771**	
	Dead Load	947	853	805	766	736	714	696	682	785	773	760	746	736	725	717	
7.0	Live Load	127	120	119	117	115	113	112	112	111	112	112	111	111	111	111	7.0
	Total Load	**1074**	**974**	**924**	**883**	**852**	**828**	**809**	**794**	**897**	**886**	**872**	**858**	**848**	**836**	**829**	
	Dead Load	1031	932	883	842	812	789	771	756	875	863	849	834	824	812	804	
8.0	Live Load	101	96	95	93	92	91	90	89	89	89	89	89	89	88	88	8.0
	Total Load	**1132**	**1029**	**978**	**935**	**904**	**880**	**861**	**846**	**964**	**953**	**939**	**923**	**913**	**901**	**893**	
9.0	**Total Load**	**1194**	**1087**	**1036**	**993**	**961**	**937**	**918**	**903**	**1037**	**1025**	**1011**	**995**	**985**	**972**	**964**	**9.0**
10.0	**Total Load**	**1250**	**1141**	**1090**	**1047**	**1015**	**992**	**973**	**959**	**1108**	**1096**	**1082**	**1065**	**1055**	**1042**	**1034**	**10.0**
11.0	**Total Load**	**1301**	**1191**	**1141**	**1098**	**1067**	**1043**	**1026**	**1012**	**1177**	**1165**	**1151**	**1134**	**1123**	**1110**	**1103**	**11.0**
12.0	**Total Load**	**1347**	**1236**	**1187**	**1145**	**1115**	**1092**	**1075**	**1062**	**1242**	**1231**	**1217**	**1200**	**1190**	**1177**	**1170**	**12.0**
14.0	**Total Load**	**1426**	**1315**	**1269**	**1229**	**1201**	**1181**	**1166**	**1155**	**1365**	**1356**	**1343**	**1326**	**1317**	**1304**	**1297**	**14.0**
16.0	**Total Load**	**1490**	**1380**	**1338**	**1301**	**1276**	**1259**	**1247**	**1239**	**1477**	**1470**	**1458**	**1442**	**1434**	**1422**	**1417**	**16.0**
18.0	**Total Load**	**1541**	**1433**	**1396**	**1363**	**1341**	**1327**	**1318**	**1312**	**1578**	**1574**	**1564**	**1549**	**1543**	**1532**	**1528**	**18.0**
20.0	**Total Load**	**1582**	**1477**	**1445**	**1415**	**1397**	**1386**	**1380**	**1378**	**1670**	**1669**	**1661**	**1647**	**1643**	**1633**	**1631**	**20.0**
24.0	**Total Load**	**1642**	**1542**	**1519**	**1496**	**1485**	**1482**	**1483**	**1486**	**1828**	**1833**	**1830**	**1819**	**1820**	**1813**	**1816**	**24.0**
28.0	**Total Load**	**1679**	**1585**	**1570**	**1554**	**1550**	**1553**	**1560**	**1571**	**1955**	**1967**	**1969**	**1963**	**1969**	**1966**	**1973**	**28.0**
32.0	**Total Load**	**1703**	**1613**	**1605**	**1595**	**1597**	**1606**	**1619**	**1635**	**2058**	**2077**	**2085**	**2083**	**2094**	**2095**	**2107**	**32.0**
36.0	**Total Load**	**1718**	**1632**	**1629**	**1624**	**1631**	**1646**	**1664**	**1686**	**2141**	**2166**	**2180**	**2183**	**2198**	**2204**	**2220**	**36.0**
40.0	**Total Load**	**1727**	**1644**	**1645**	**1644**	**1656**	**1675**	**1698**	**1724**	**2208**	**2240**	**2258**	**2265**	**2286**	**2296**	**2317**	**40.0**

Table B-2 Maximum Height of Cover for RCP (Continued)

COVER (ft)	RCP DIAMETER	57"	60"	63"	66"	69"	72"	75"	78"	81"	84"	87"	90"	93"	96"	102"	108"	COVER (ft)
2.0	Dead Load	223	221	218	216	214	212	211	209	208	206	205	204	203	202	203	201	2.0
	Live Load	769	731	696	664	636	609	585	562	541	522	504	487	471	457	430	406	
	Total Load	**993**	**952**	**915**	**881**	**850**	**822**	**796**	**772**	**749**	**729**	**710**	**692**	**675**	**659**	**633**	**607**	
2.5	Dead Load	277	273	271	268	266	263	261	259	258	256	255	253	252	251	252	250	2.5
	Live Load	564	536	510	487	466	446	429	412	397	383	369	357	346	335	315	297	
	Total Load	**841**	**810**	**781**	**756**	**732**	**710**	**690**	**672**	**655**	**639**	**625**	**611**	**598**	**586**	**568**	**548**	
3.0	Dead Load	329	325	322	319	316	314	311	309	307	305	304	302	300	299	401	298	3.0
	Live Load	427	406	386	369	353	338	325	312	300	290	280	270	262	253	239	225	
	Total Load	**756**	**731**	**709**	**688**	**669**	**652**	**636**	**622**	**606**	**596**	**584**	**573**	**563**	**553**	**540**	**524**	
4.0	Dead Load	430	426	421	418	414	411	409	406	404	401	399	397	395	394	396	393	4.0
	Live Load	273	273	273	273	273	273	262	252	243	234	226	218	211	205	193	182	
	Total Load	**704**	**699**	**695**	**691**	**688**	**685**	**671**	**658**	**647**	**636**	**626**	**616**	**607**	**599**	**589**	**576**	
5.0	Dead Load	527	522	518	513	510	506	503	500	497	495	492	490	488	486	490	486	5.0
	Live Load	192	192	192	192	192	192	192	192	192	192	192	192	186	180	170	160	
	Total Load	**720**	**715**	**710**	**706**	**702**	**699**	**696**	**693**	**690**	**687**	**685**	**683**	**675**	**667**	**660**	**647**	
6.0	Dead Load	621	615	610	606	601	598	594	591	588	585	583	580	578	576	581	577	6.0
	Live Load	143	143	143	143	143	143	143	143	143	143	143	143	143	143	143	143	
	Total Load	**765**	**759**	**753**	**749**	**745**	**741**	**738**	**735**	**732**	**729**	**726**	**724**	**722**	**719**	**727**	**720**	
7.0	Dead Load	711	705	700	695	690	686	682	679	676	673	670	668	665	663	669	665	7.0
	Live Load	111	111	111	111	111	111	111	111	111	111	111	111	111	111	113	113	
	Total Load	**822**	**816**	**811**	**806**	**802**	**796**	**794**	**790**	**787**	**784**	**782**	**779**	**777**	**775**	**782**	**778**	
8.0	Dead Load	797	791	786	781	776	772	769	765	761	758	756	753	751	748	756	752	8.0
	Live Load	88	88	88	88	88	88	88	88	88	88	88	88	88	88	90	90	
	Total Load	**886**	**880**	**874**	**869**	**865**	**861**	**857**	**853**	**850**	**847**	**845**	**842**	**840**	**837**	**846**	**842**	
9.0	**Total Load**	**957**	**951**	**945**	**940**	**936**	**932**	**928**	**924**	**921**	**918**	**915**	**913**	**911**	**908**	**918**	**914**	**9.0**
10.0	**Total Load**	**1027**	**1021**	**1016**	**1011**	**1006**	**1002**	**996**	**995**	**992**	**989**	**986**	**984**	**982**	**979**	**991**	**987**	**10.0**
11.0	**Total Load**	**1096**	**1090**	**1085**	**1080**	**1076**	**1072**	**1068**	**1065**	**1062**	**1059**	**1057**	**1054**	**1052**	**1050**	**1063**	**1059**	**11.0**
12.0	**Total Load**	**1163**	**1157**	**1152**	**1148**	**1144**	**1140**	**1137**	**1134**	**1131**	**1128**	**1126**	**1124**	**1122**	**1120**	**1135**	**1131**	**12.0**
14.0	**Total Load**	**1292**	**1287**	**1283**	**1279**	**1275**	**1272**	**1270**	**1267**	**1265**	**1263**	**1262**	**1260**	**1258**	**1257**	**1275**	**1272**	**14.0**
16.0	**Total Load**	**1412**	**1409**	**1405**	**1403**	**1400**	**1396**	**1397**	**1395**	**1394**	**1393**	**1392**	**1391**	**1390**	**1389**	**1411**	**1409**	**16.0**
18.0	**Total Load**	**1525**	**1523**	**1521**	**1519**	**1518**	**1517**	**1517**	**1516**	**1516**	**1516**	**1516**	**1516**	**1516**	**1516**	**1542**	**1542**	**18.0**
20.0	**Total Load**	**1630**	**1629**	**1629**	**1629**	**1629**	**1630**	**1631**	**1631**	**1632**	**1633**	**1634**	**1635**	**1636**	**1637**	**1668**	**1669**	**20.0**
24.0	**Total Load**	**1818**	**1821**	**1825**	**1828**	**1832**	**1835**	**1839**	**1842**	**1846**	**1850**	**1853**	**1857**	**1860**	**1863**	**1903**	**1908**	**24.0**
28.0	**Total Load**	**1980**	**1987**	**1994**	**2002**	**2009**	**2016**	**2032**	**2030**	**2037**	**2043**	**2050**	**2056**	**2062**	**2068**	**2118**	**2126**	**28.0**
32.0	**Total Load**	**2118**	**2130**	**2142**	**2153**	**2164**	**2175**	**2186**	**2196**	**2206**	**2218**	**2226**	**2235**	**2244**	**2253**	**2313**	**2326**	**32.0**
36.0	**Total Load**	**2237**	**2253**	**2269**	**2285**	**2300**	**2315**	**2329**	**2343**	**2357**	**2371**	**2383**	**2396**	**2408**	**2420**	**2490**	**2509**	**36.0**
40.0	**Total Load**	**2338**	**2359**	**2379**	**2399**	**2418**	**2437**	**2456**	**2474**	**2491**	**2508**	**2524**	**2540**	**2556**	**2571**	**2651**	**2675**	**40.0**

Table B-2 Maximum Height of Cover for RCP (Continued)

Design Criteria

General. D-load values given in the table indicate greater accuracy than warranted in field installation. Thus, when specifying, pipe should be classified in 50-D increments; for example. 800-D, 850-D.

Bedding. The above table is based on installations with ordinary bedding[1] and should not be used for other conditions, except as noted. D-loads given in the table are based on a load factor of 1.50. For classes of bedding with load factors other than 1.50, the corrected dead load may be obtained by multiplying the table's dead load by 1.50 and dividing by the desired dead load factor.

Backfill.[2] Based on Marston's curve for saturated topsoil, when $K\mu$ =0.150. The table is conservative for sands. gravels and cohesionless materials. The D-load should be recomputed for clay backfills, when $K\mu$>0.150, using the correct coefficient. The table has been computed using materials with a unit weight of 110 pounds per cubic foot. For materials having a unit weight other than 110 pounds per cubic foot, the correct dead load can be calculated by multiplying the dead load shown in the table by the desired unit weight and dividing by 110.

Trench Width. D-loads given in the table are based on trench widths (at top of pipe) of pipe OD plus 16 inches for pipe diameters 33 inches or less; and pipe OD plus 24 inches for pipe diameters greater than 33 inches. Pipe ODs are based on wall thicknesses given in the dimensional data table for Wall A pipe through 96-inch diameter, and on wall thicknesses given in table for large diameter pipe with 102- and 108-inch diameters. Thicker wall designs may require a slightly higher D-load classification.

For earth covers of two to eight feet, the tabulated dead load D-loads approach the maximum loads that occur at the transition trench width. The difference in dead load for wider trench widths or the projecting conduit conditions may be a small value, and the pipe may safety withstand the increase. For assurance, it will be necessary to recompute the D-loads for any installation change at any depth of cover.

Safety Factor. A safety factor of 1.0 against the occurrence of the 0.01-inch crack is assumed in the calculations. If a factor different than 1.0 is desired, corrected D-loads can be obtained by multiplying loads shown in the table by the desired safety factor.

Live Load. Live load distribution is calculated from AASHTO HS-20 for truck loads.[3] For different wheel loadings, correct live loads can be obtained by multiplying live loads shown in the table by the desired maximum wheel load in kips and dividing by 16. This table is limited to AASHTO live load distributions (a square at backfill depth, *H*, whose sides equal *1.75H*) for single truck loading with impact factors based on depth. A live load factor of 1.50, recommended in Iowa State College Bulletin 112 by Spangler for ordinary bedding or better, is used. For covers nine feet and greater, live loads are included in the indicated D-loads.

References:

(1) "Soil Engineering," Spangler. M. G. and Handy. R. L; Intext Educational Publishers, Third Edition, 1973.

(2) "Loads on Underground Conduits," Engineering Library 1-2, Ameron, 1973.

(3) "Standard Specification for Highway Bridges: American Association of State Highway and Transportation Officials (AASHTO), Twelfth Edition, 1973.

Table B-3 Deflection and Curvature for Straight RCP

Pipe Size	Wall Thickness	Outside Diameter	Bell Depth	Maximum Joint Opening	Minimum Radius*	Maximum Deflection
(inch)	(inch)	(inch)	(inch)	(inch)	(feet)	(degrees)
12	2	16	11/16	5/8	206	2.23
15	2	19	1	3/4	204	2.27
18	2-1/4	22-1/2	15/16	3/4	242	1.92
21	2-3/8	25-3/4	1-5/8	3/4	277	1.67
24	2-1/2	29	1-5/8	3/4	311	1.48
27	2-5/8	32-1/4	1-5/8	3/4	346	1.33
30	2-3/4	35-1/2	1-3/4	3/4	381	1.22
33	2-7/8	38-3/4	1-3/4	3/4	417	1.12
36	3-1/8	42-1/4	1-3/4	3/4	454	1.02
39	3-1/2	46	1-7/8	1	370	1.25
42	3-3/4	49-1/2	1-7/8	1	398	1.17
45	3-7/8	52-3/4	1-7/8	1	424	1.08
48	4-1/8	56-1/4	2	1	453	1.02
51	4-1/4	59-1/2	2	1	478	0.97
54	4-1/2	63	2	1	507	0.92
57	4-3/4	66-3/5	2	1	535	0.87
60	5	70	2	1	563	0.82
63	5-1/4	73-1/2	2	1	591	0.78
66	5-1/2	77	2	1	619	0.75
69	5-3/4	80-1/2	2	1	647	0.72
72	6	84	2-5/8	1	675	0.68
75	6-1/4	87-1/2	2-5/8	1	704	0.65
78	6-1/2	91	2-5/8	1	731	0.62
81	6-3/4	94-1/2	2-5/8	1	760	0.58
84	7	98	2-3/4	1	788	0.57
87	7-1/4	101-1/2	3	1	816	0.55
90	7-1/2	105	3	1	844	0.53
93	7-3/4	108-1/2	3	1	872	0.52
96	8	112	3	1	900	0.50

** Radius based upon 8-foot RCP segments; scale proportionally for other segment lengths.*

Table B-4

Table B-4 Radius of Curvature for Beveled RCP

Pipe Size	Minimum Radius of Curvature (feet)			
	8-ft Lengths	8-ft Lengths	4-ft Lengths	4-ft Lengths
(in)	5º Bevel One End	5º Bevel Both Ends	5º Bevel One End	5º Bevel Both Ends
12	91.5	45.5	45.0	22.5
15	91.0	45.0	45.0	22.5
18	91.0	45.0	44.5	22.5
21	91.0	45.0	44.0	22.0
24	91.0	45.0	44.0	22.0
27	90.5	44.5	44.0	22.0
30	90.5	44.5	44.0	22.0
33	90.5	44.5	43.5	22.0
36	90.0	44.5	43.5	22.0
39	90.0	44.0	43.5	22.0
42	90.0	44.0	43.0	21.5
45	89.5	44.0	43.0	21.5
48	89.5	43.5	42.0	21.0
51	87.5	41.5	41.0	20.5
54	87.5	41.5	40.5	20.5
57	89.0	43.0	42.5	21.5
60	87.0	40.0	39.5	20.0
63	87.0	40.5	40.5	20.5
66	86.5	41.0	40.0	20.0
69	86.5	41.0	40.0	20.0
72	85.5	39.5	39.0	19.5
75	86.0	40.5	39.5	20.0
78	86.0	40.5	40.0	20.0
81	86.5	40.0	39.5	20.0

Table B-5

Table B-5 Anticipated Additional Service Life for Steel and Aluminum Pipes with Bituminous Coatings

Environment				Bituminous Coating	Bituminous Coating and Paved Invert	Asbestos Bonded Bituminous Coating and Paved Invert
Location	**Probable Channel Slope**	**Probable Flow Velocity of Q_{10}**	**Channel Material[1]**			
Valley	< 2%	< 5 ft/s	Abrasive	6	15	20
			Non-Abrasive	8	15	20
Foothill	~ 3%	5 – 7 ft/s	Abrasive	6	12	20
			Non-Abrasive	8	15	20
Mountains	> 4%	> 7 ft/s	Abrasive	0	5	8
			Non-Abrasive	2	10	20

Notes:

1. Channel Materials. If there is no existing culvert, it may be assumed that the channel is potentially abrasive to culvert if sand and/or rocks are present. Presence of silt, clay, or heavy vegetation may indicate a non-abrasive flow. For continuous flow, the years of invert protection can be expected to be one-half of that shown.

2. Any bituminous coating may add up to 25 years of service on the backfill side of the culvert.

Table B-6

Table B-6 Maximum Height of Cover for CMP with 2-2/3" x ½" Annular and Helical Corrugations

Diameter (inches)	Maximum Height of Cover (feet)					
	Metal Thickness in Inches					
	0.052	**0.064**	**0.079**	**0.109**	**0.138**	**0.168**
12 to 15	100	100				
18	85	100				
21	73	91	100			
24	64	80	100			
30	51	64	80	100		
36	42	53	66	93	100	
42	36	46	57	80	100	
48		40	50	70	90	100
54			44	62	80	98
60				56	72	88
66				51	64	78
72					55	68
78						59
84						52

Table B-7 Maximum Height of Cover for Structural Steel Plate Circular Pipe with 6”x2” Corrugations

Diameter (inches)	Maximum Height of Cover (feet) 4-Bolt Seams Metal Thickness in Inches						
	0.109	0.138	0.168	0.19	0.22	0.25	0.28
60	67	87					
66	61	79	96				
72	56	72	88	99			
78	52	67	81	91			
84	48	62	76	85	99		
90	45	58	71	79	92		
96	42	54	66	74	86	99	
102	40	51	62	70	81	93	
108	37	48	59	66	77	88	99
114	35	46	56	62	73	83	94
120	34	43	53	59	69	79	89
126	32	41	50	56	66	75	85
132	31	39	48	54	63	72	81
138	29	38	46	51	60	69	77
144	28	36	44	49	58	66	74
150	27	35	42	47	55	63	71
156	26	33	41	45	53	61	68
162	25	32	39	44	51	59	66
168	24	31	38	42	49	56	64
174	23	30	36	41	48	54	61
180	22	29	35	39	46	53	59
186	21	28	34	38	44	51	57
192	21	27	33	36	42	49	56
198	20	26	31	35	41	47	54
204	19	25	30	34	39	45	52
210	18	24	29	32	38	43	51
216	18	23	28	31	37	42	49
222	17	22	27	30	35	40	48
228	16	21	26	29	34	39	47
234	16	20	25	28	33	38	46
240	15	20	24	27	32	36	44
246	15	19	23	26	30	35	43
252	14	18	22	25	29	34	42

Notes: (1) When flow velocities with full culvert at entrance exceed 5 ft/s, thicker metal invert plates shall be provided for values in shaded cells. (2) Special design is required for fill heights over 100 ft.

Figure B-1

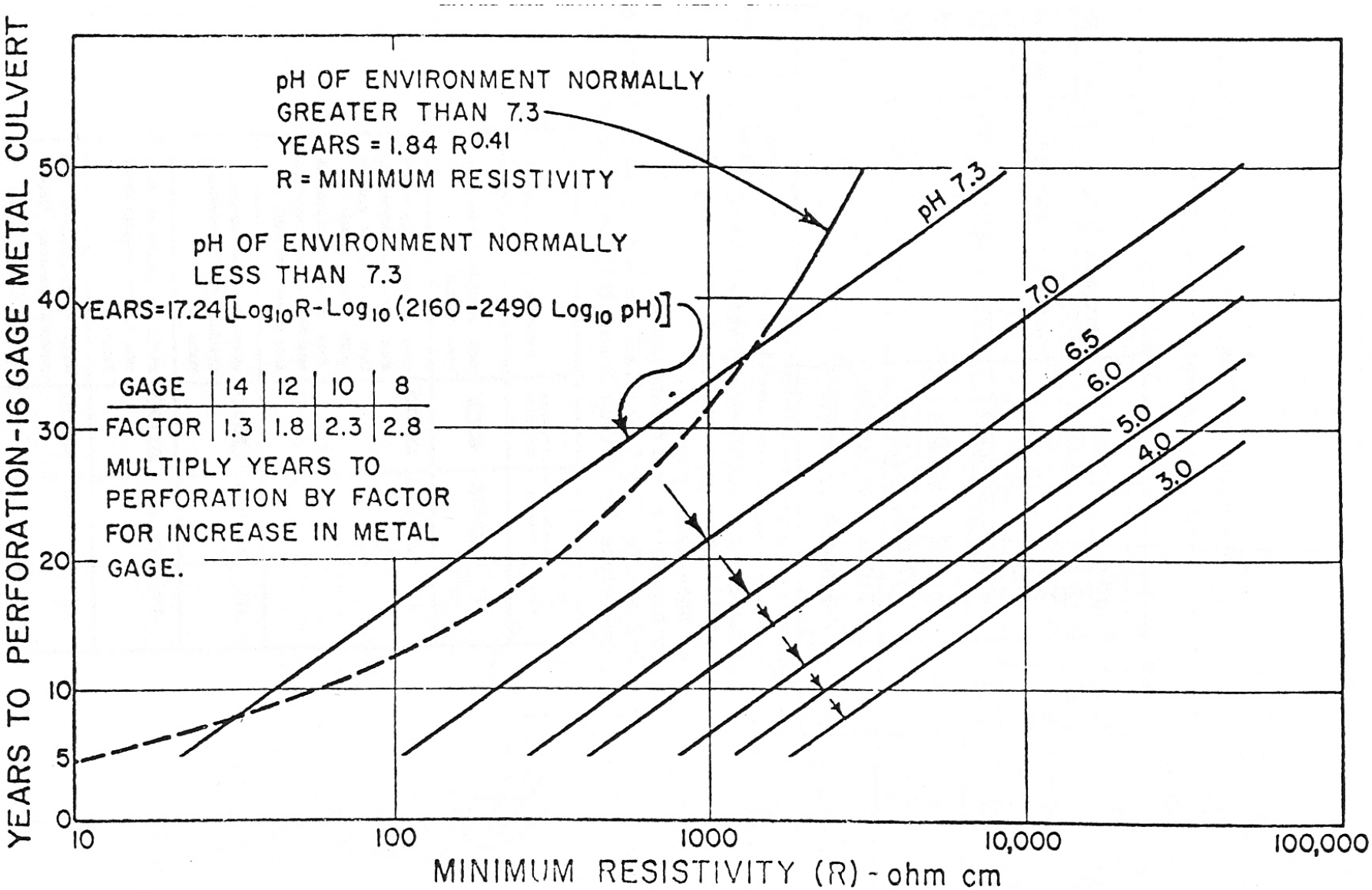

Figure B-1 Estimated Years to Perforation for Metal Culverts

[THIS PAGE INTENTIONALLY LEFT BLANK]

APPENDIX C — CULVERT DESIGN NOMOGRAPHS

This Appendix contains selected design nomographs from the Federal Highway Administration's Hydraulic Design Series No. 5, *Hydraulic Design of Highway Culverts* (2001). The design engineer should refer to HDS-5 for additional design nomographs and guidance on the application of these curves to culvert design.

Reference

Department of Transportation, Federal Highway Administration. (September 2001). *Hydraulic Design of Highway Culverts*. Hydraulic Design Series No. 5, 2nd Edition. Publication No. FHWA-NHI-01-020.

[THIS PAGE INTENTIONALLY LEFT BLANK]

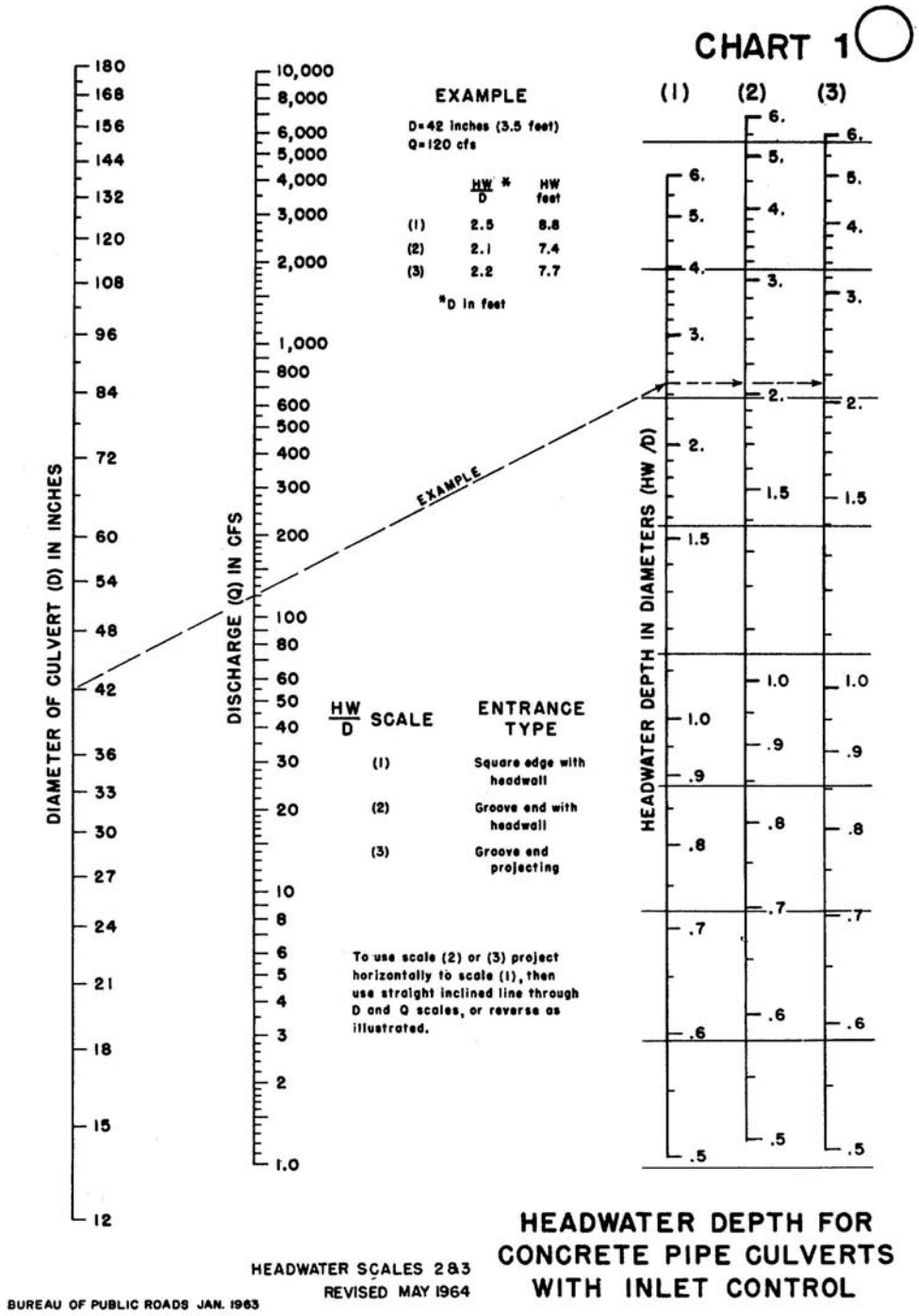
CHART 1
EXAMPLE
D=42 inches (3.5 feet)
Q=120 cfs
HW/D * HW feet
(1) 2.5 8.8
(2) 2.1 7.4
(3) 2.2 7.7
*D in feet
EXAMPLE
DIAMETER OF CULVERT (D) IN INCHES
DISCHARGE (Q) IN CFS
HEADWATER DEPTH IN DIAMETERS (HW/D)
(1) (2) (3)
HW/D SCALE
ENTRANCE TYPE
(1) Square edge with headwall
(2) Groove end with headwall
(3) Groove end projecting
To use scale (2) or (3) project horizontally to scale (1), then use straight inclined line through D and Q scales, or reverse as illustrated.
HEADWATER SCALES 2&3
REVISED MAY 1964
BUREAU OF PUBLIC ROADS JAN. 1963
HEADWATER DEPTH FOR CONCRETE PIPE CULVERTS WITH INLET CONTROL

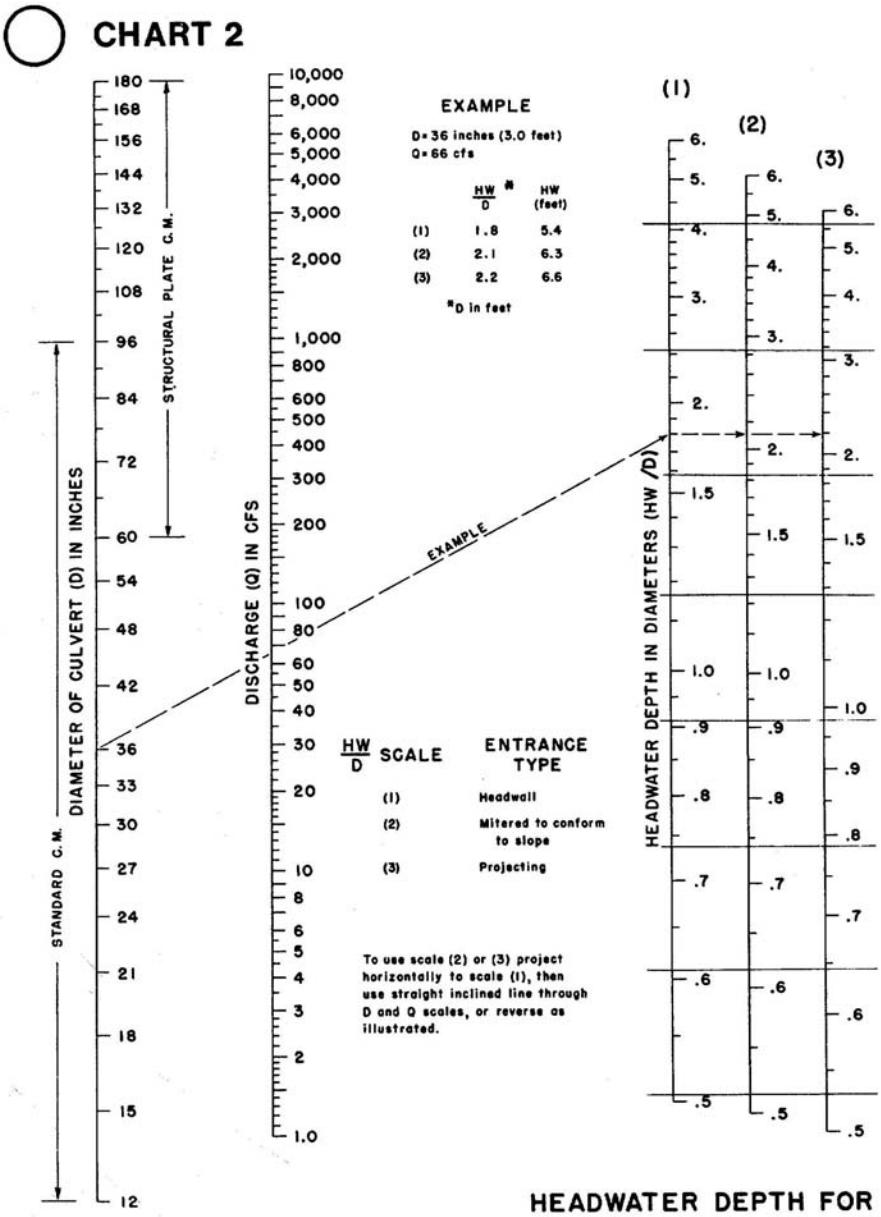
CHART 2
DIAMETER OF CULVERT (D) IN INCHES
STANDARD C.M.
STRUCTURAL PLATE C.M.
DISCHARGE (Q) IN CFS
EXAMPLE
D=36 inches (3.0 feet)
Q=66 cfs
HW/D * HW (feet)
(1) 1.8 5.4
(2) 2.1 6.3
(3) 2.2 6.6
*D in feet
HW/D SCALE
ENTRANCE TYPE
(1) Headwall
(2) Mitered to conform to slope
(3) Projecting
To use scale (2) or (3) project horizontally to scale (1), then use straight inclined line through D and Q scales, or reverse as illustrated.
HEADWATER DEPTH IN DIAMETERS (HW/D)
(1)
(2)
(3)
HEADWATER DEPTH FOR C. M. PIPE CULVERTS WITH INLET CONTROL
BUREAU OF PUBLIC ROADS JAN. 1963

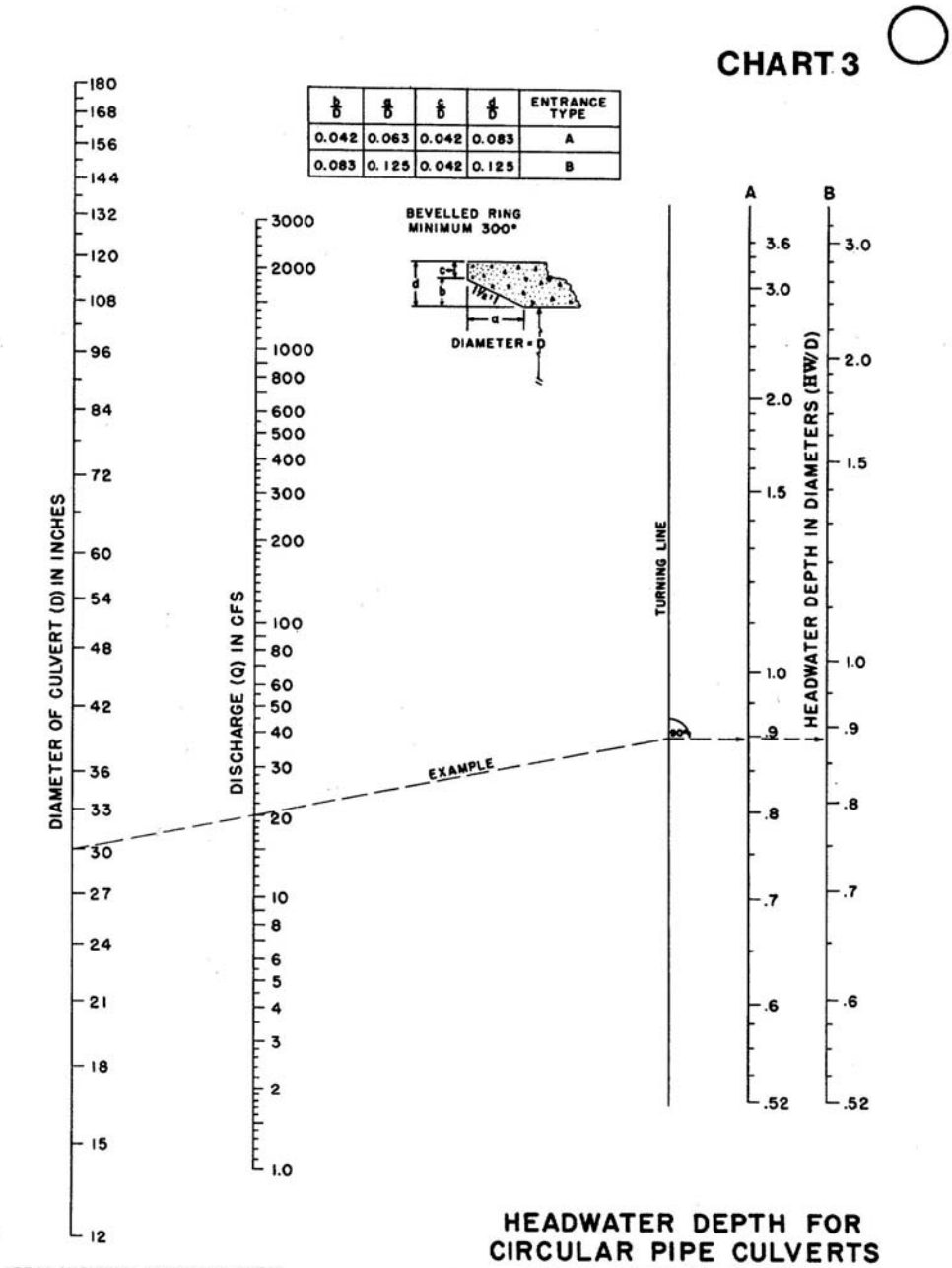

HEADWATER DEPTH FOR CIRCULAR PIPE CULVERTS WITH BEVELED RING INLET CONTROL

ERAL HIGHWAY ADMINISTRATION
MAY 1973

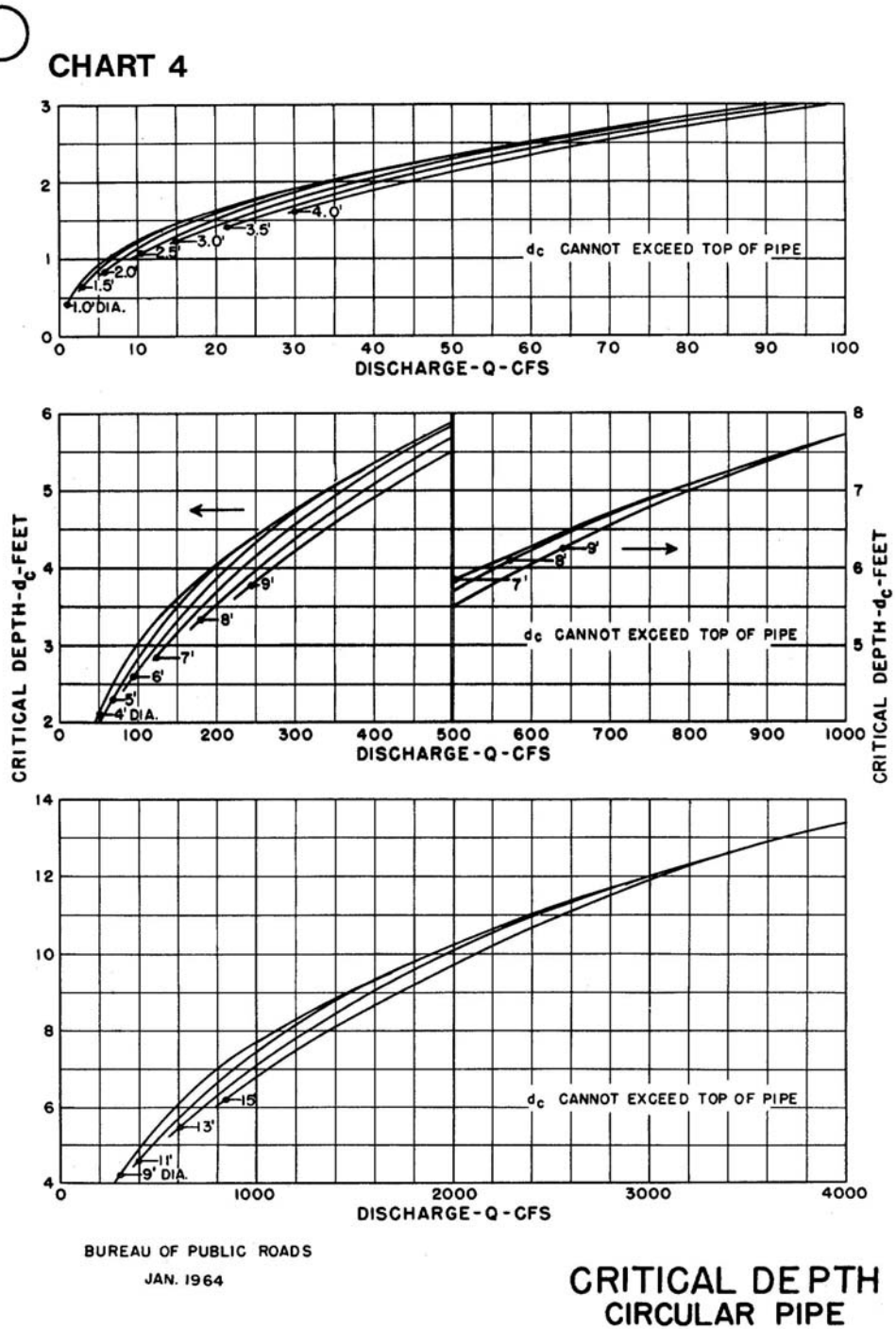

BUREAU OF PUBLIC ROADS
JAN. 1964

CRITICAL DEPTH
CIRCULAR PIPE

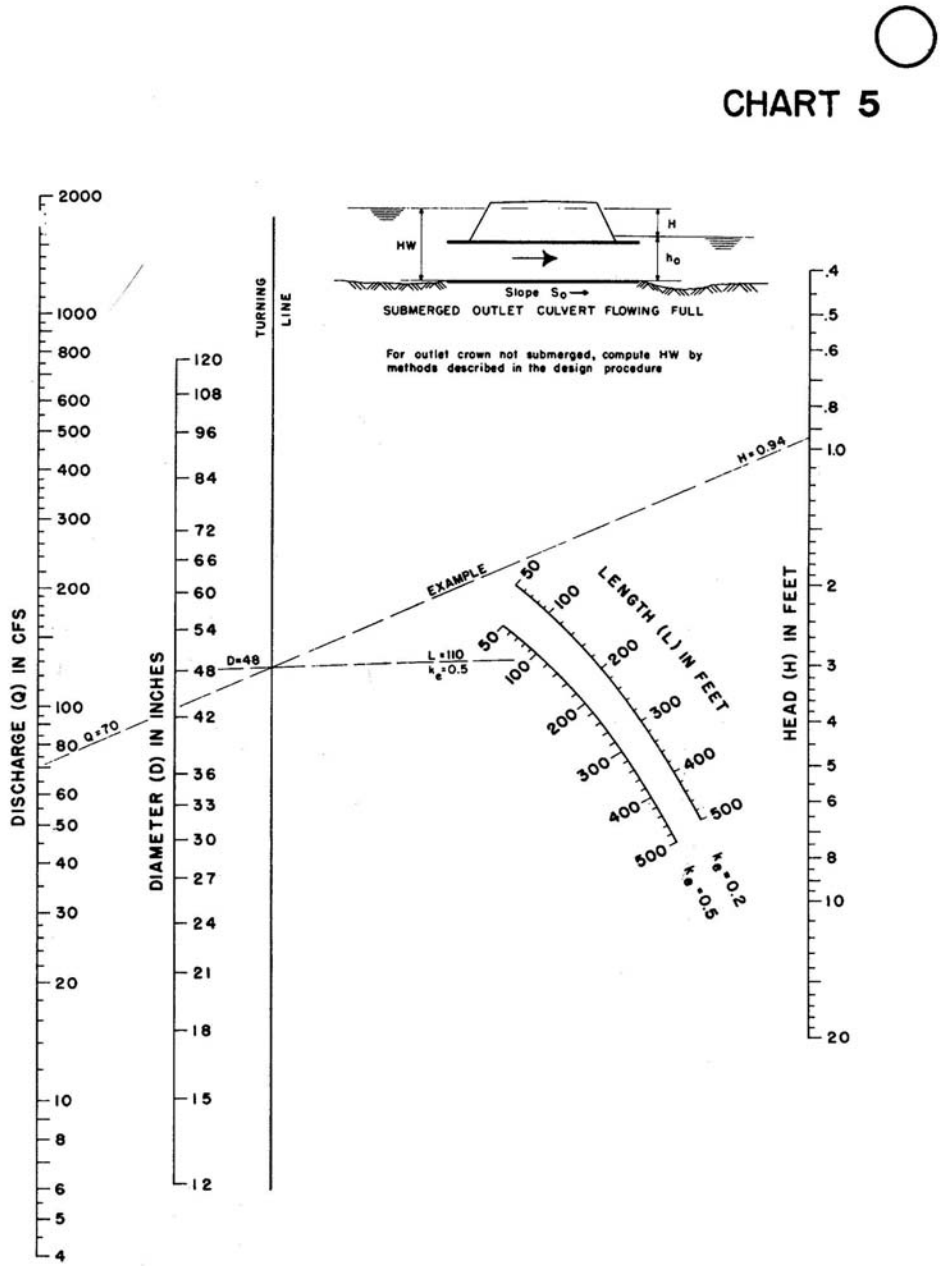

HEAD FOR
CONCRETE PIPE CULVERTS
FLOWING FULL
n = 0.012

BUREAU OF PUBLIC ROADS JAN. 1963

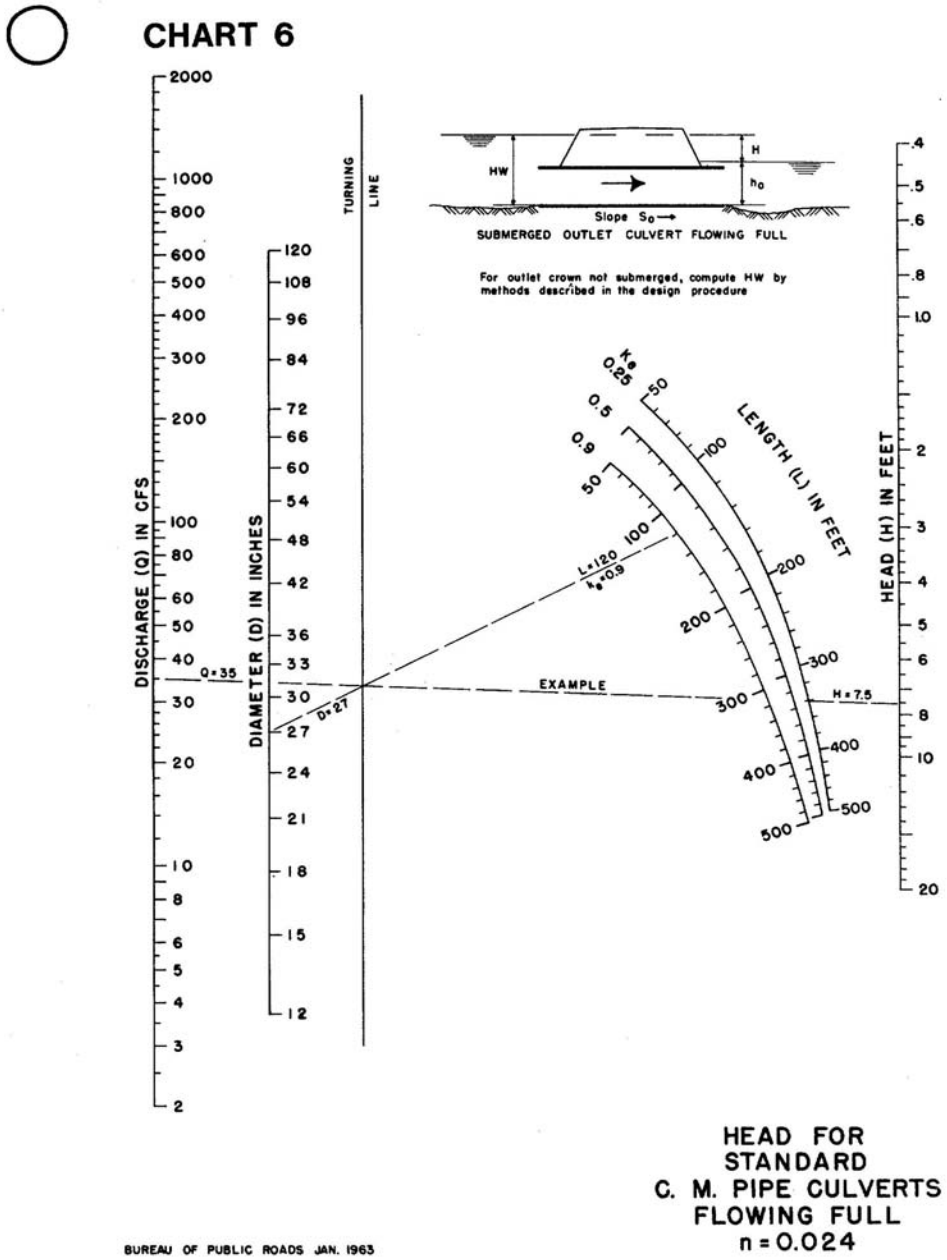
CHART 6
DISCHARGE (Q) IN CFS
DIAMETER (D) IN INCHES
TURNING LINE
HW
H
h_o
Slope S_o
SUBMERGED OUTLET CULVERT FLOWING FULL
For outlet crown not submerged, compute HW by methods described in the design procedure
K_e
0.25
0.5
0.9
LENGTH (L) IN FEET
HEAD (H) IN FEET
Q=35
D=27
L=120
K_e=0.9
EXAMPLE
H=7.5
HEAD FOR STANDARD C. M. PIPE CULVERTS FLOWING FULL n = 0.024
BUREAU OF PUBLIC ROADS JAN. 1963

CHART 7

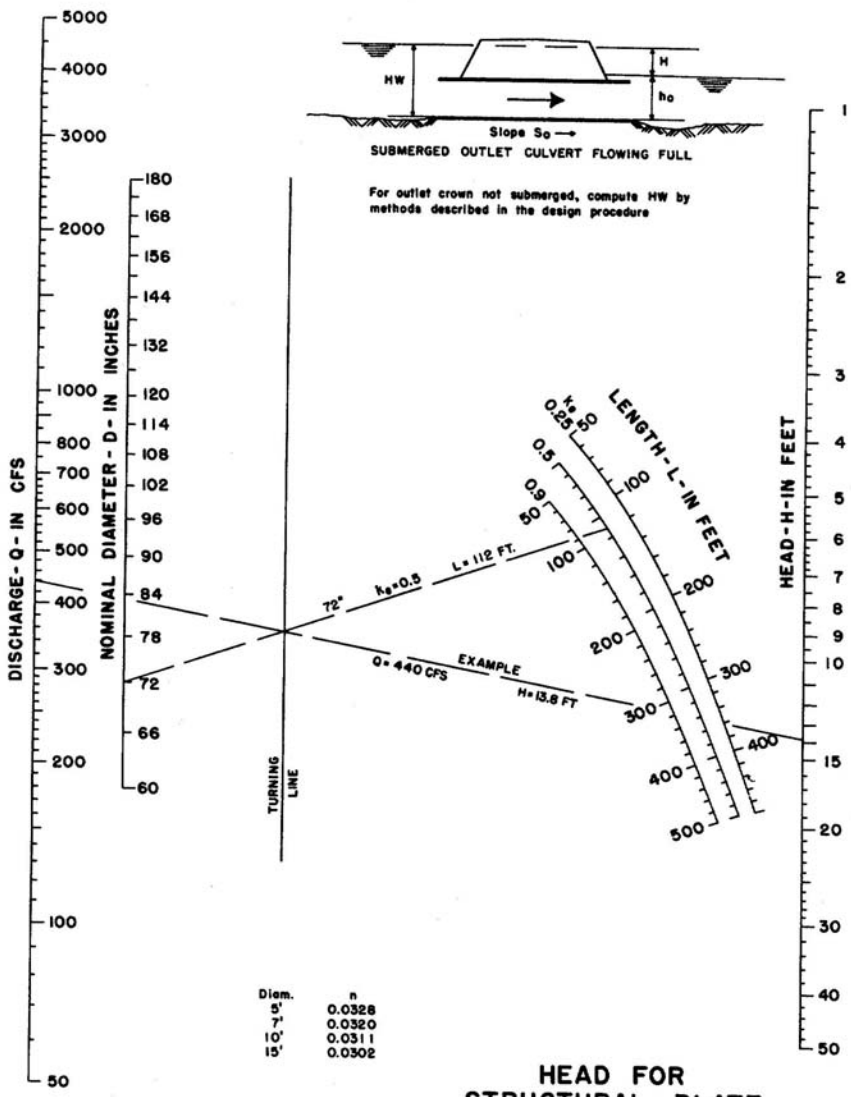

HEAD FOR
STRUCTURAL PLATE
CORR. METAL PIPE CULVERTS
FLOWING FULL
n = 0.0328 TO 0.0302

BUREAU OF PUBLIC ROADS JAN. 1963

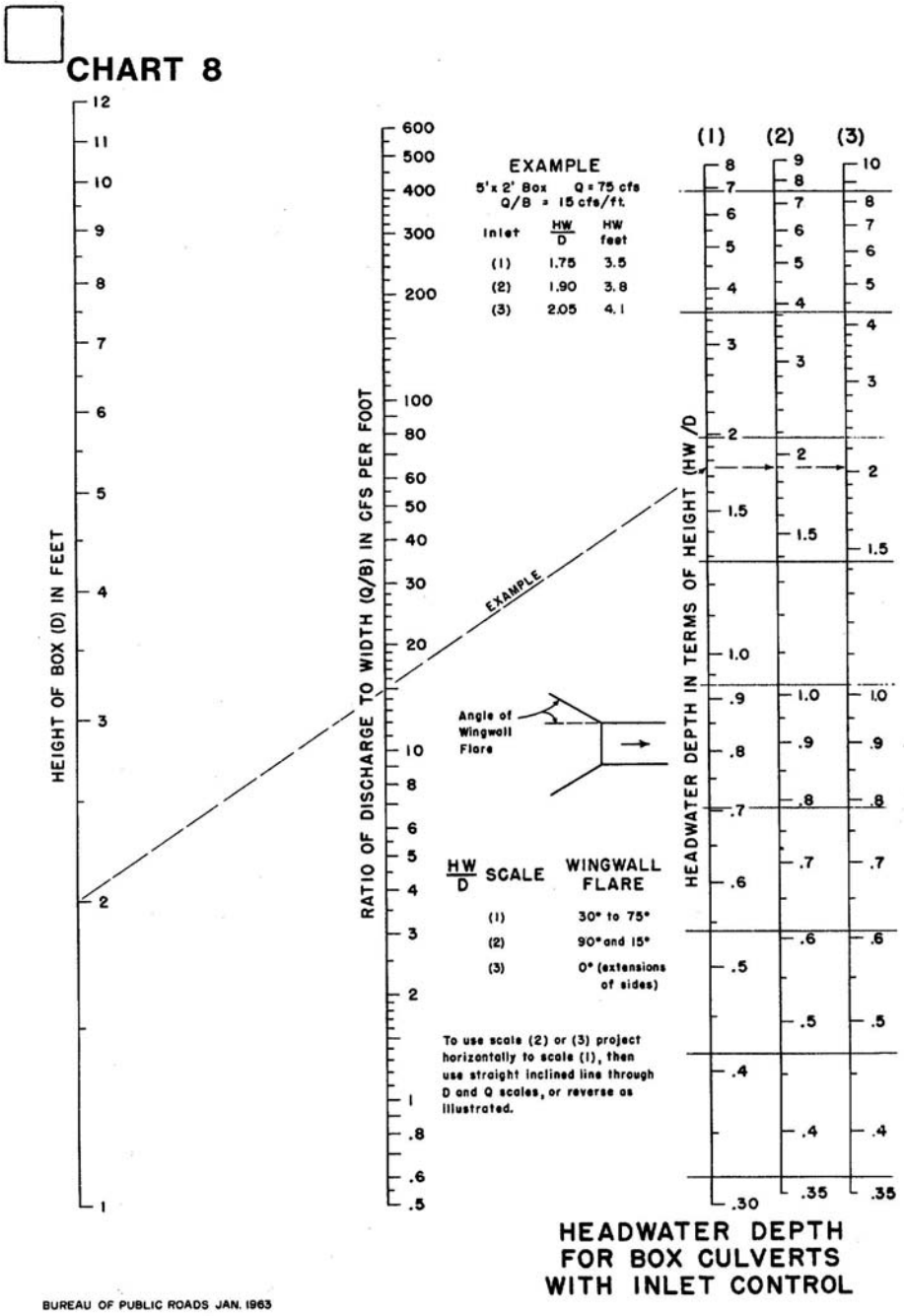
CHART 8
HEIGHT OF BOX (D) IN FEET
RATIO OF DISCHARGE TO WIDTH (Q/B) IN CFS PER FOOT
HEADWATER DEPTH IN TERMS OF HEIGHT (HW/D)
(1) (2) (3)
EXAMPLE
5'x 2' Box Q = 75 cfs
Q/B = 15 cfs/ft.
Inlet HW/D HW feet
(1) 1.75 3.5
(2) 1.90 3.8
(3) 2.05 4.1
EXAMPLE
Angle of Wingwall Flare
HW/D SCALE WINGWALL FLARE
(1) 30° to 75°
(2) 90° and 15°
(3) 0° (extensions of sides)
To use scale (2) or (3) project horizontally to scale (1), then use straight inclined line through D and Q scales, or reverse as illustrated.
HEADWATER DEPTH FOR BOX CULVERTS WITH INLET CONTROL
BUREAU OF PUBLIC ROADS JAN. 1963

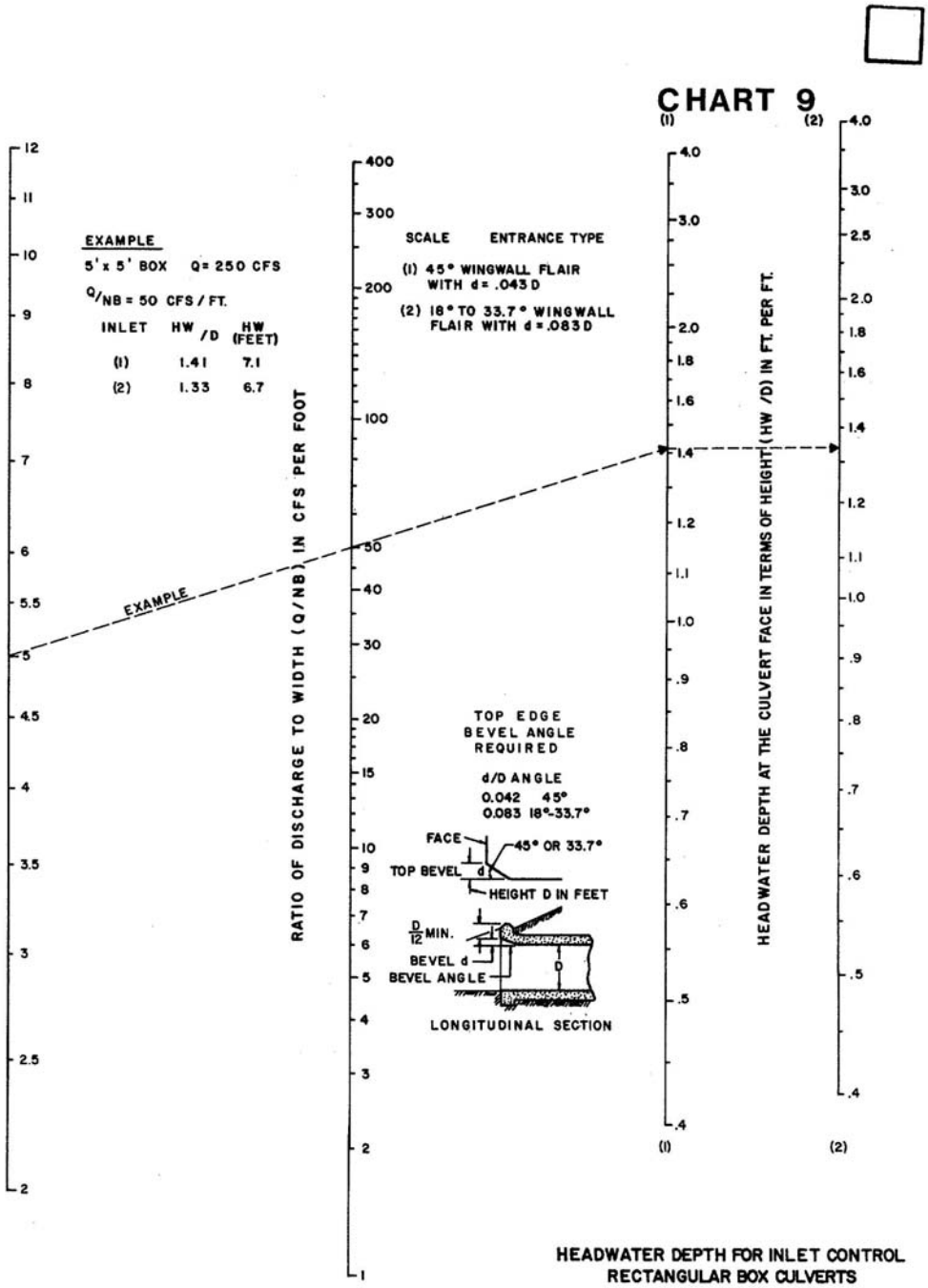

HEADWATER DEPTH FOR INLET CONTROL
RECTANGULAR BOX CULVERTS
FLARED WINGWALLS 18° TO 33.7° & 45°
WITH BEVELED EDGE AT TOP OF INLET

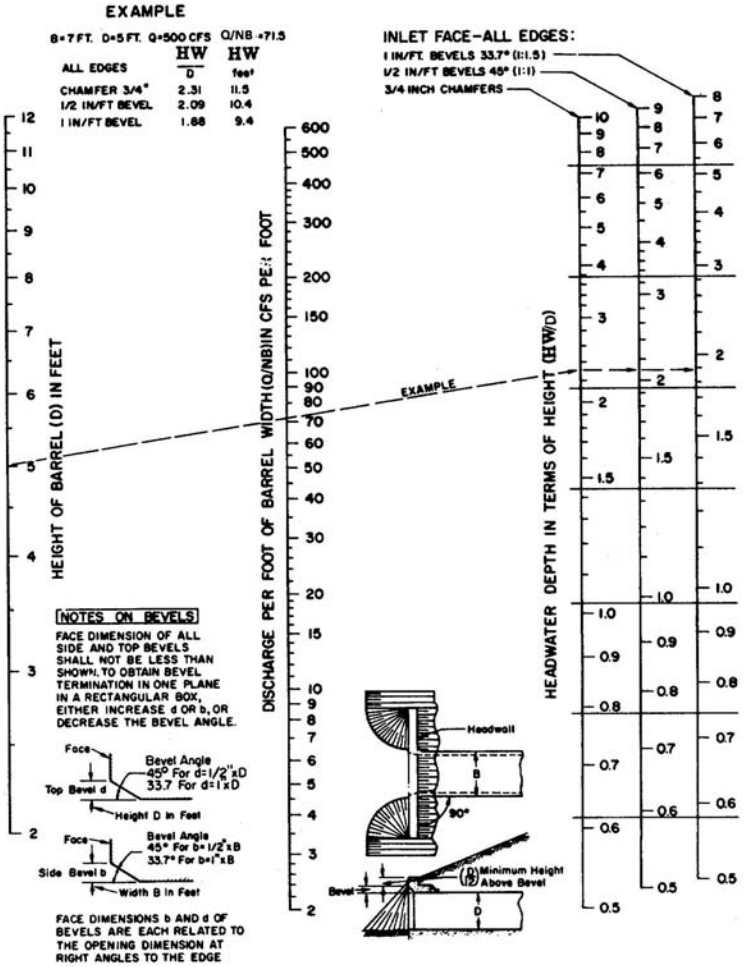
CHART 10
EXAMPLE
B=7 FT. D=5 FT. Q=500 CFS Q/NB =71.5
HW/D
HW feet
ALL EDGES
CHAMFER 3/4" 2.31 11.5
1/2 IN/FT BEVEL 2.09 10.4
1 IN/FT BEVEL 1.88 9.4
INLET FACE-ALL EDGES:
1 IN/FT. BEVELS 33.7° (1:1.5)
1/2 IN/FT BEVELS 45° (1:1)
3/4 INCH CHAMFERS
HEIGHT OF BARREL (D) IN FEET
DISCHARGE PER FOOT OF BARREL WIDTH (Q/NB) IN CFS PER FOOT
HEADWATER DEPTH IN TERMS OF HEIGHT (HW/D)
EXAMPLE
NOTES ON BEVELS
FACE DIMENSION OF ALL SIDE AND TOP BEVELS SHALL NOT BE LESS THAN SHOWN. TO OBTAIN BEVEL TERMINATION IN ONE PLANE IN A RECTANGULAR BOX, EITHER INCREASE d OR b, OR DECREASE THE BEVEL ANGLE.
Face
Top Bevel d
Bevel Angle 45° For d=1/2"xD 33.7 For d=1xD
Height D in Feet
Side Bevel b
Bevel Angle 45° For b=1/2"xB 33.7° For b=1"xB
Width B in Feet
FACE DIMENSIONS b AND d OF BEVELS ARE EACH RELATED TO THE OPENING DIMENSION AT RIGHT ANGLES TO THE EDGE
Headwall
90°
Bevel
Minimum Height Above Bevel
FEDERAL HIGHWAY ADMINISTRATION
MAY 1973
HEADWATER DEPTH FOR INLET CONTROL
RECTANGULAR BOX CULVERTS
90° HEADWALL
CHAMFERED OR BEVELED INLET EDGES

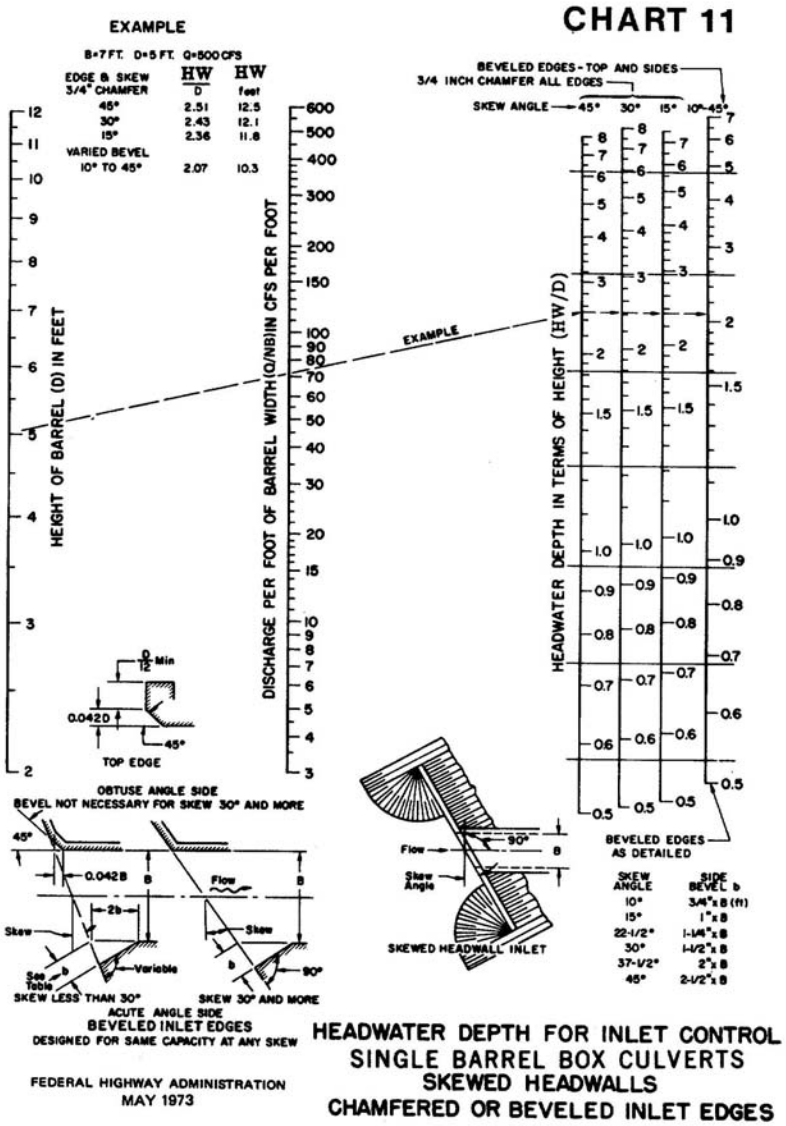
CHART 11
EXAMPLE
B=7 FT. D=5 FT. Q=500 CFS
EDGE & SKEW 3/4" CHAMFER
HW/D
HW feet
45° 2.51 12.5
30° 2.43 12.1
15° 2.36 11.8
VARIED BEVEL 10° TO 45° 2.07 10.3
HEIGHT OF BARREL (D) IN FEET
DISCHARGE PER FOOT OF BARREL WIDTH (Q/NB) IN CFS PER FOOT
EXAMPLE
BEVELED EDGES - TOP AND SIDES
3/4 INCH CHAMFER ALL EDGES
SKEW ANGLE 45° 30° 15° 10° 45°
HEADWATER DEPTH IN TERMS OF HEIGHT (HW/D)
D/12 Min
0.042D
45°
TOP EDGE
OBTUSE ANGLE SIDE
BEVEL NOT NECESSARY FOR SKEW 30° AND MORE
0.042B
Flow
Skew
2b
See Table
Variable
SKEW LESS THAN 30°
SKEW 30° AND MORE
ACUTE ANGLE SIDE
BEVELED INLET EDGES
DESIGNED FOR SAME CAPACITY AT ANY SKEW
Skew Angle
SKEWED HEADWALL INLET
BEVELED EDGES AS DETAILED
SKEW ANGLE
SIDE BEVEL b
10° 3/16"x B (ft)
15° 1"x B
22-1/2° 1-1/16"x B
30° 1-1/2"x B
37-1/2° 2"x B
45° 2-1/2"x B
FEDERAL HIGHWAY ADMINISTRATION
MAY 1973
HEADWATER DEPTH FOR INLET CONTROL
SINGLE BARREL BOX CULVERTS
SKEWED HEADWALLS
CHAMFERED OR BEVELED INLET EDGES

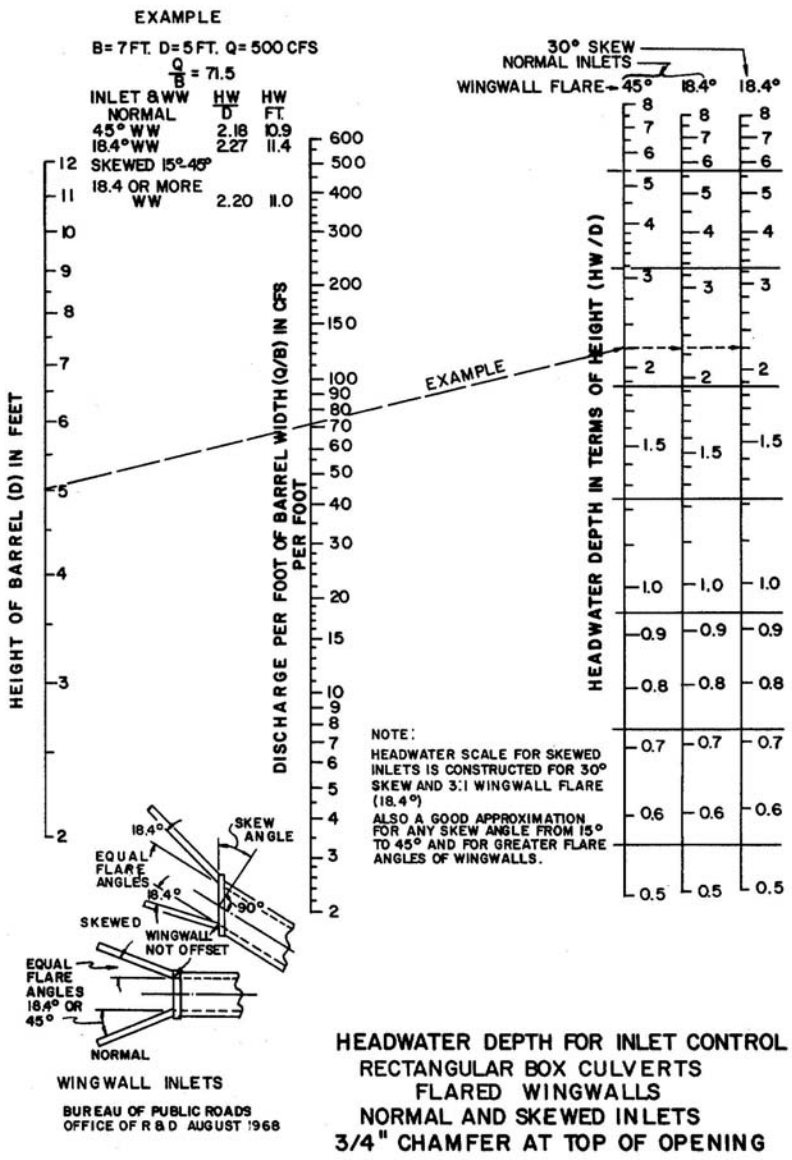
CHART 12
EXAMPLE
B= 7 FT. D= 5 FT. Q= 500 CFS
Q/B = 71.5
INLET & WW NORMAL HW/D HW FT.
45° WW 2.18 10.9
18.4° WW 2.27 11.4
SKEWED 15°-45°
18.4 OR MORE WW 2.20 11.0
30° SKEW NORMAL INLETS
WINGWALL FLARE 45° 18.4° 18.4°
HEIGHT OF BARREL (D) IN FEET
DISCHARGE PER FOOT OF BARREL WIDTH (Q/B) IN CFS PER FOOT
HEADWATER DEPTH IN TERMS OF HEIGHT (HW/D)
EXAMPLE
NOTE:
HEADWATER SCALE FOR SKEWED INLETS IS CONSTRUCTED FOR 30° SKEW AND 3:1 WINGWALL FLARE (18.4°)
ALSO A GOOD APPROXIMATION FOR ANY SKEW ANGLE FROM 15° TO 45° AND FOR GREATER FLARE ANGLES OF WINGWALLS.
SKEW ANGLE
EQUAL FLARE ANGLES
SKEWED
WINGWALL NOT OFFSET
EQUAL FLARE ANGLES 18.4° OR 45°
NORMAL
WINGWALL INLETS
BUREAU OF PUBLIC ROADS
OFFICE OF R & D AUGUST 1968
HEADWATER DEPTH FOR INLET CONTROL
RECTANGULAR BOX CULVERTS
FLARED WINGWALLS
NORMAL AND SKEWED INLETS
3/4" CHAMFER AT TOP OF OPENING

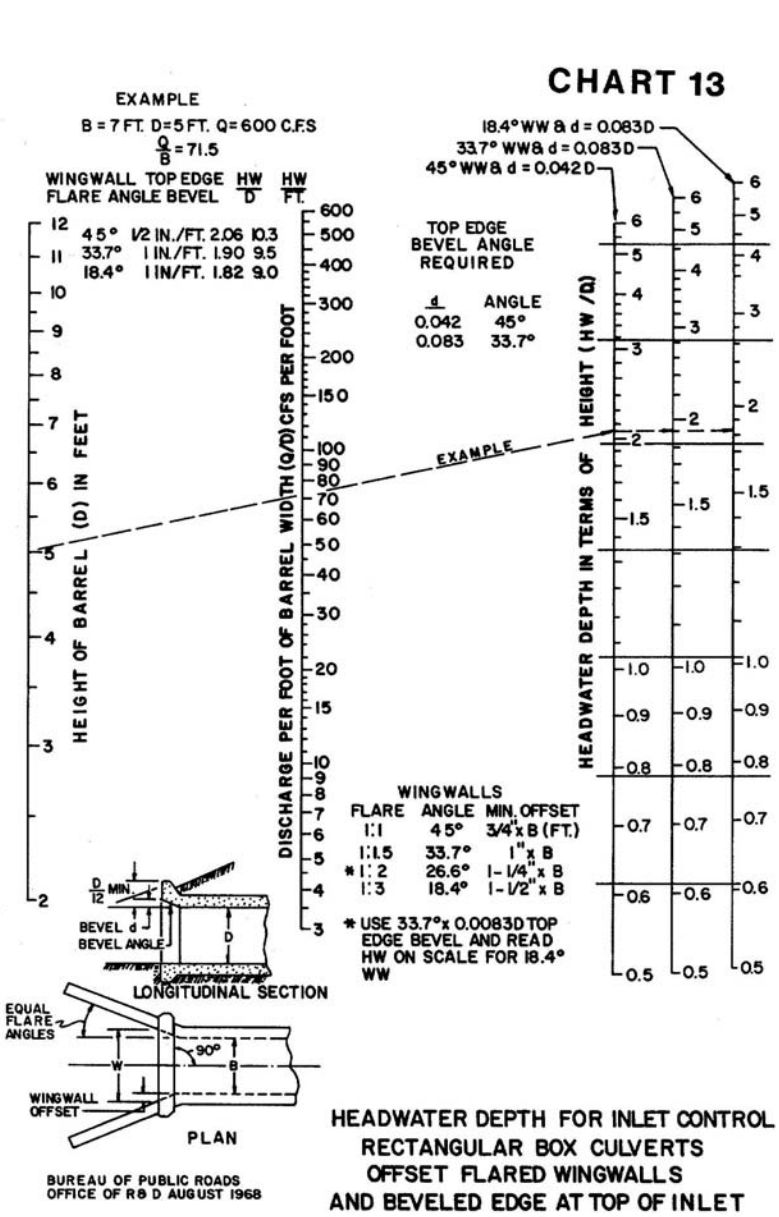
CHART 13
EXAMPLE
B = 7 FT. D=5 FT. Q=600 C.F.S
Q/B = 71.5
WINGWALL FLARE ANGLE
TOP EDGE BEVEL
HW/D
HW/FT.
45° 1/2 IN./FT. 2.06 10.3
33.7° 1 IN./FT. 1.90 9.5
18.4° 1 IN/FT. 1.82 9.0
HEIGHT OF BARREL (D) IN FEET
DISCHARGE PER FOOT OF BARREL WIDTH (Q/D) CFS PER FOOT
18.4° WW & d = 0.083D
33.7° WW & d = 0.083D
45° WW & d = 0.042D
TOP EDGE BEVEL ANGLE REQUIRED
d ANGLE
0.042 45°
0.083 33.7°
EXAMPLE
HEADWATER DEPTH IN TERMS OF HEIGHT (HW/D)
WINGWALLS
FLARE ANGLE MIN. OFFSET
1:1 45° 3/4" x B (FT.)
1:1.5 33.7° 1" x B
* 1:2 26.6° 1-1/4" x B
1:3 18.4° 1-1/2" x B
* USE 33.7° x 0.0083D TOP EDGE BEVEL AND READ HW ON SCALE FOR 18.4° WW
D/12 MIN.
BEVEL d
BEVEL ANGLE
D
LONGITUDINAL SECTION
EQUAL FLARE ANGLES
90°
W
B
WINGWALL OFFSET
PLAN
BUREAU OF PUBLIC ROADS
OFFICE OF R & D AUGUST 1968
HEADWATER DEPTH FOR INLET CONTROL
RECTANGULAR BOX CULVERTS
OFFSET FLARED WINGWALLS
AND BEVELED EDGE AT TOP OF INLET

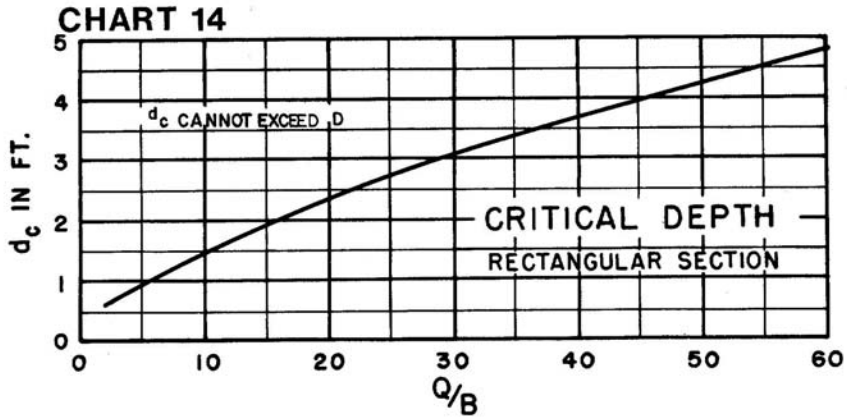

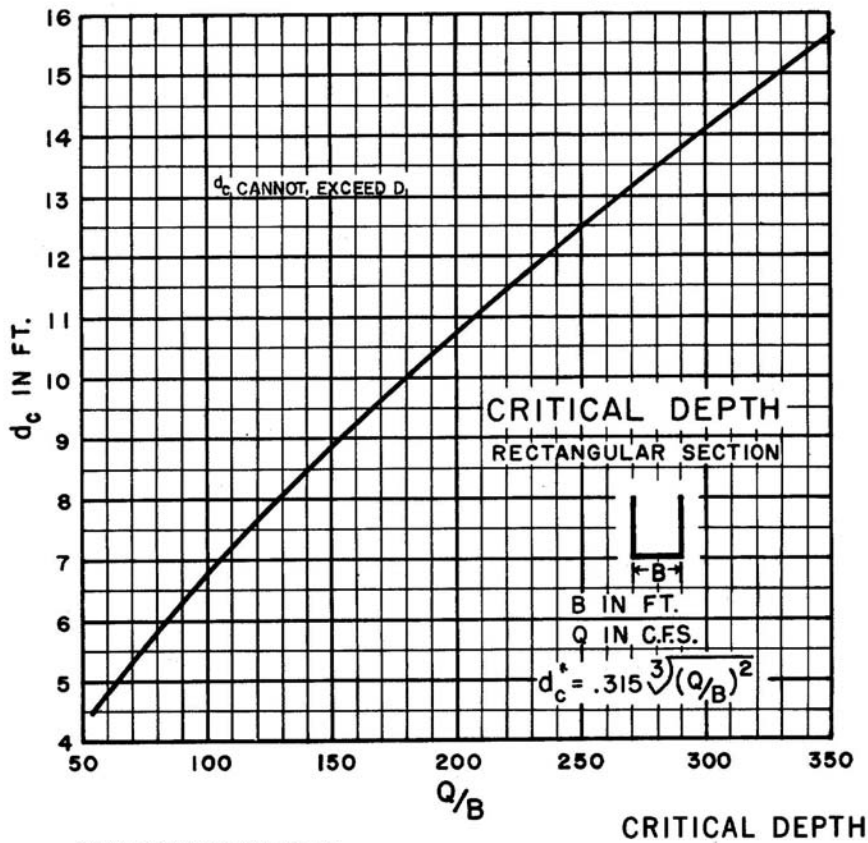

BUREAU OF PUBLIC ROADS JAN. 1963

5-38

CRITICAL DEPTH
RECTANGULAR SECTION

CHART 15

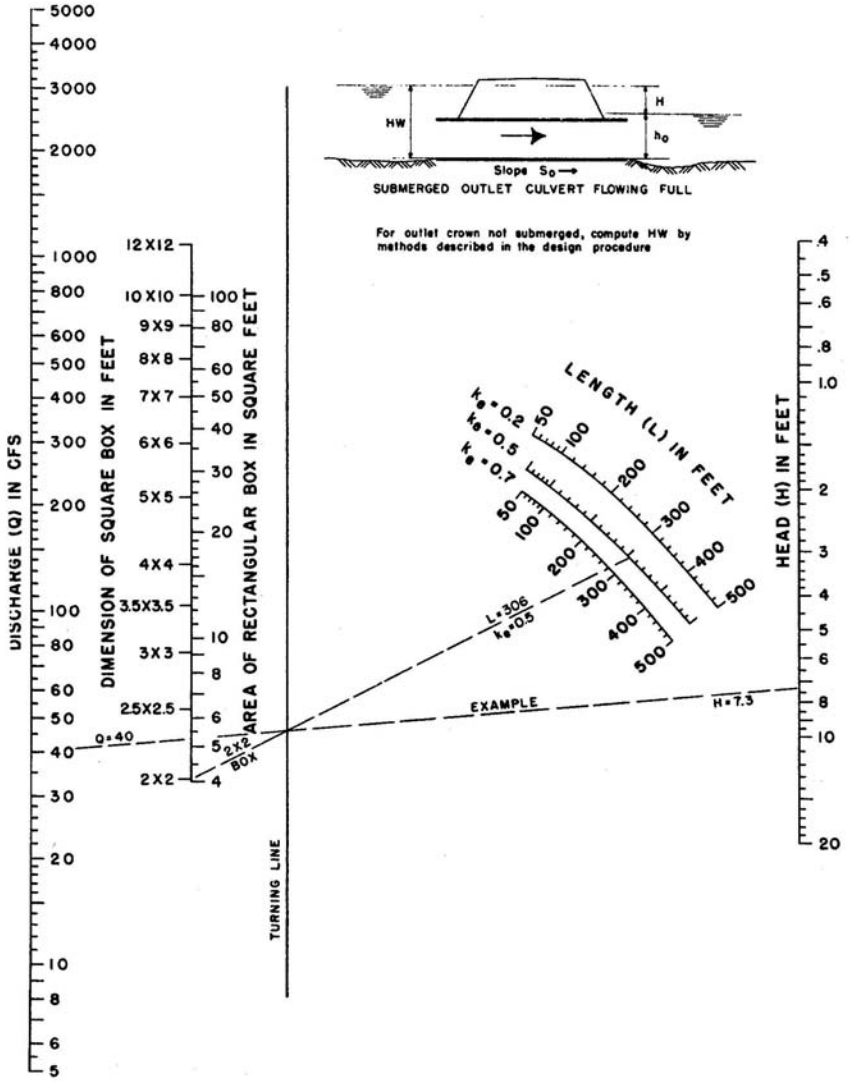

HEAD FOR CONCRETE BOX CULVERTS FLOWING FULL n = 0.012

AU OF PUBLIC ROADS JAN. 1963

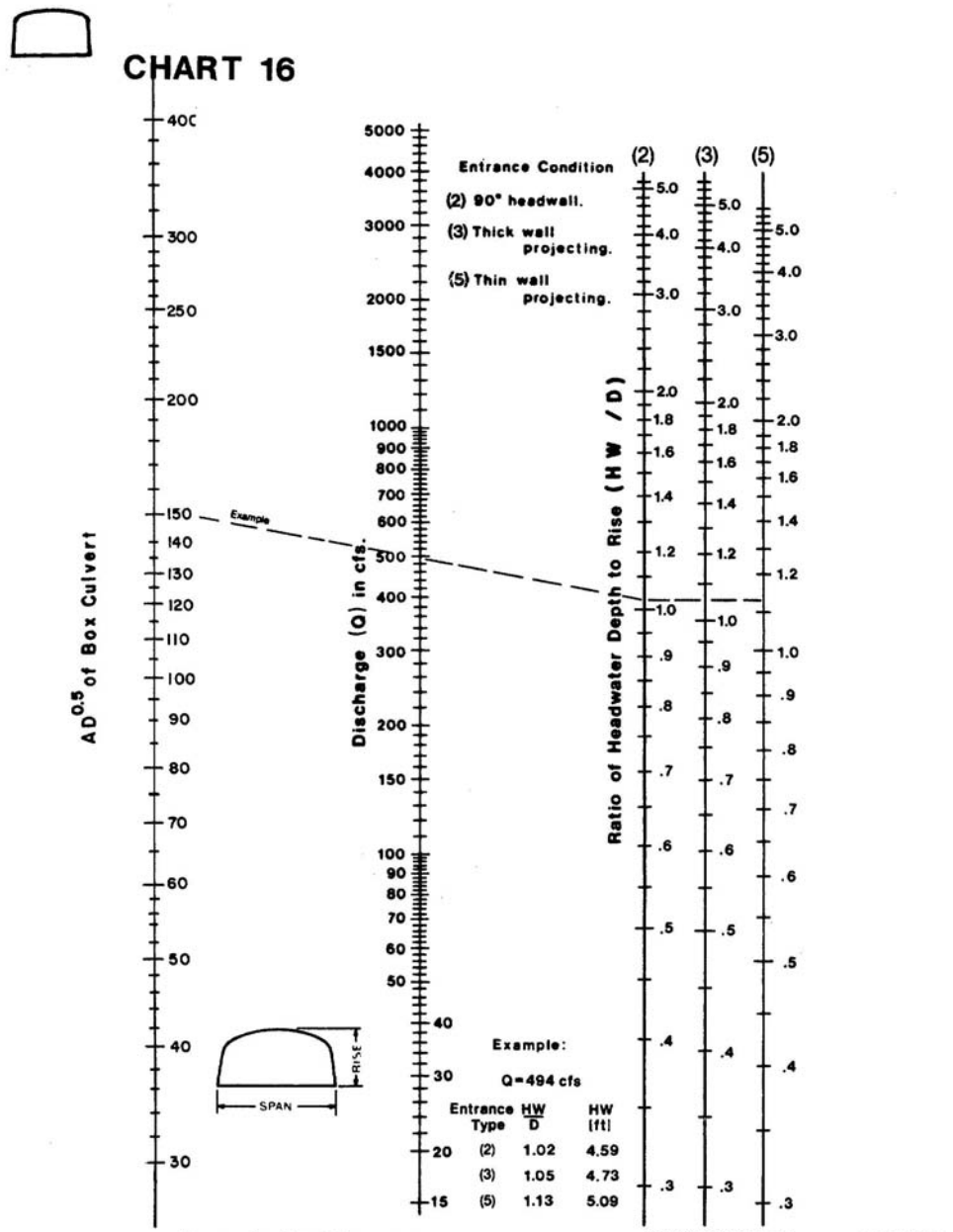

Nomographs adapted from material furnished by Kaiser Aluminum and Chemical Corporation

HEADWATER DEPTH FOR C.M. BOX CULVERTS RISE / SPAN < 0.3 WITH INLET CONTROL

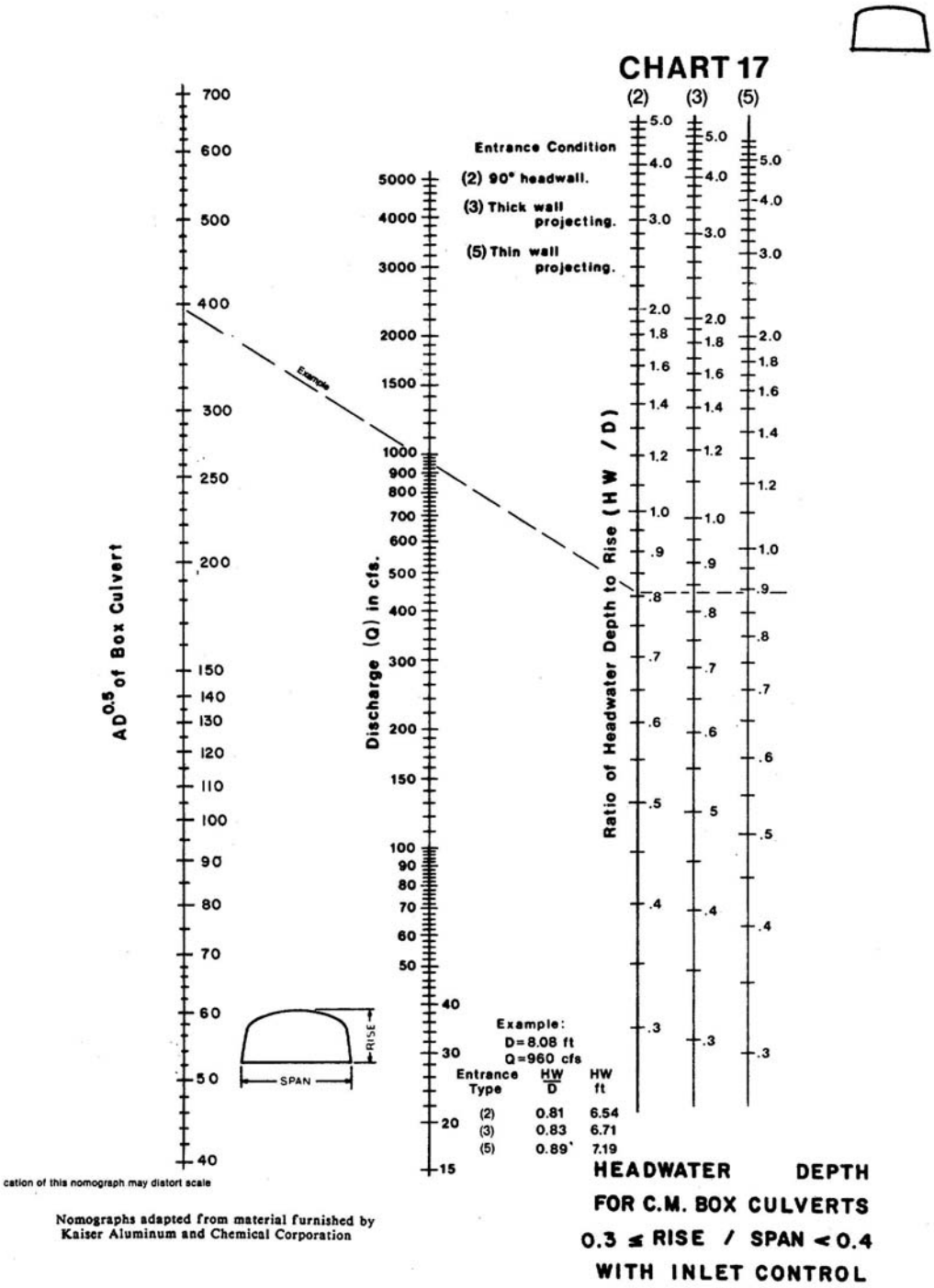
CHART 17
Entrance Condition
(2) 90° headwall.
(3) Thick wall projecting.
(5) Thin wall projecting.
AD^0.5 of Box Culvert
Discharge (Q) in cfs.
Ratio of Headwater Depth to Rise (HW / D)
Example
RISE
SPAN
Example:
D=8.08 ft
Q=960 cfs
Entrance Type | HW/D | HW ft
(2) 0.81 6.54
(3) 0.83 6.71
(5) 0.89 7.19
cation of this nomograph may distort scale
Nomographs adapted from material furnished by Kaiser Aluminum and Chemical Corporation
HEADWATER DEPTH
FOR C.M. BOX CULVERTS
0.3 ≤ RISE / SPAN < 0.4
WITH INLET CONTROL

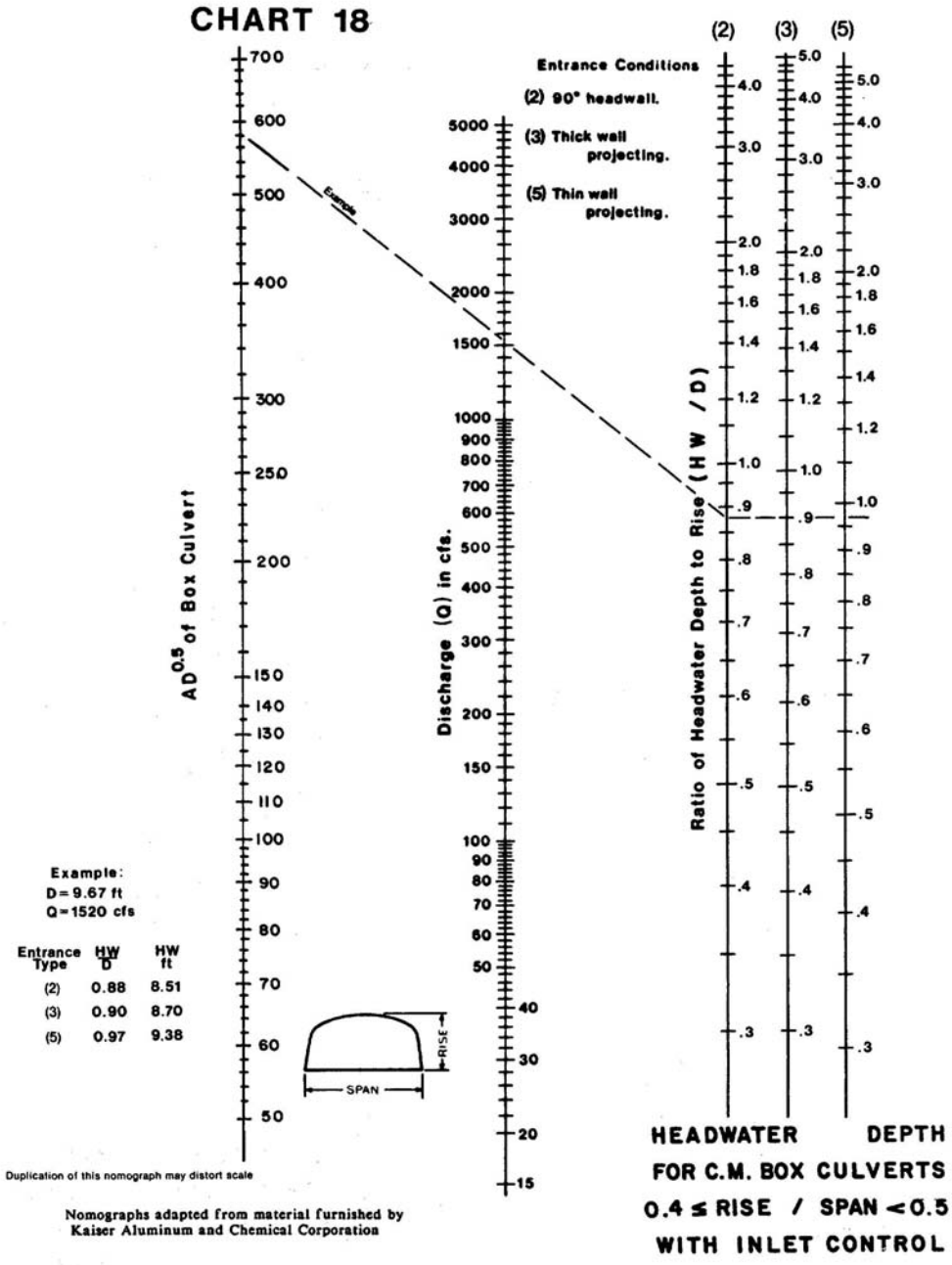
CHART 18
Entrance Conditions
(2) 90° headwall.
(3) Thick wall projecting.
(5) Thin wall projecting.
(2) (3) (5)
AD^0.5 of Box Culvert
Discharge (Q) in cfs.
Ratio of Headwater Depth to Rise (HW / D)
Example
Example:
D = 9.67 ft
Q = 1520 cfs
Entrance Type | HW/D | HW ft
(2) 0.88 8.51
(3) 0.90 8.70
(5) 0.97 9.38
RISE
SPAN
Duplication of this nomograph may distort scale
Nomographs adapted from material furnished by Kaiser Aluminum and Chemical Corporation
HEADWATER DEPTH
FOR C.M. BOX CULVERTS
0.4 ≤ RISE / SPAN < 0.5
WITH INLET CONTROL

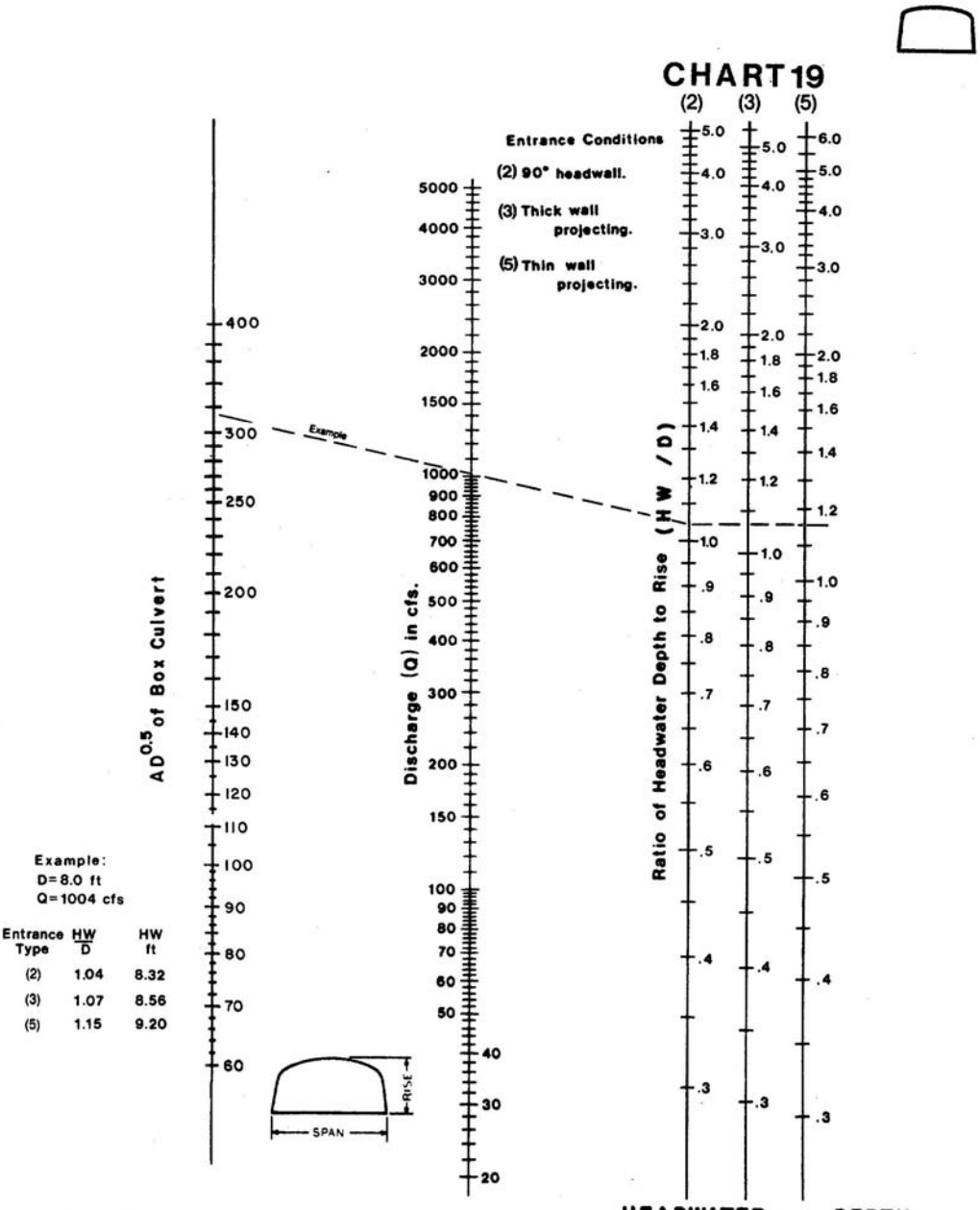

Nomographs adapted from material furnished by Kaiser Aluminum and Chemical Corporation

HEADWATER DEPTH FOR C.M. BOX CULVERTS 0.5 ≤ RISE / SPAN WITH INLET CONTROL

CHART 20

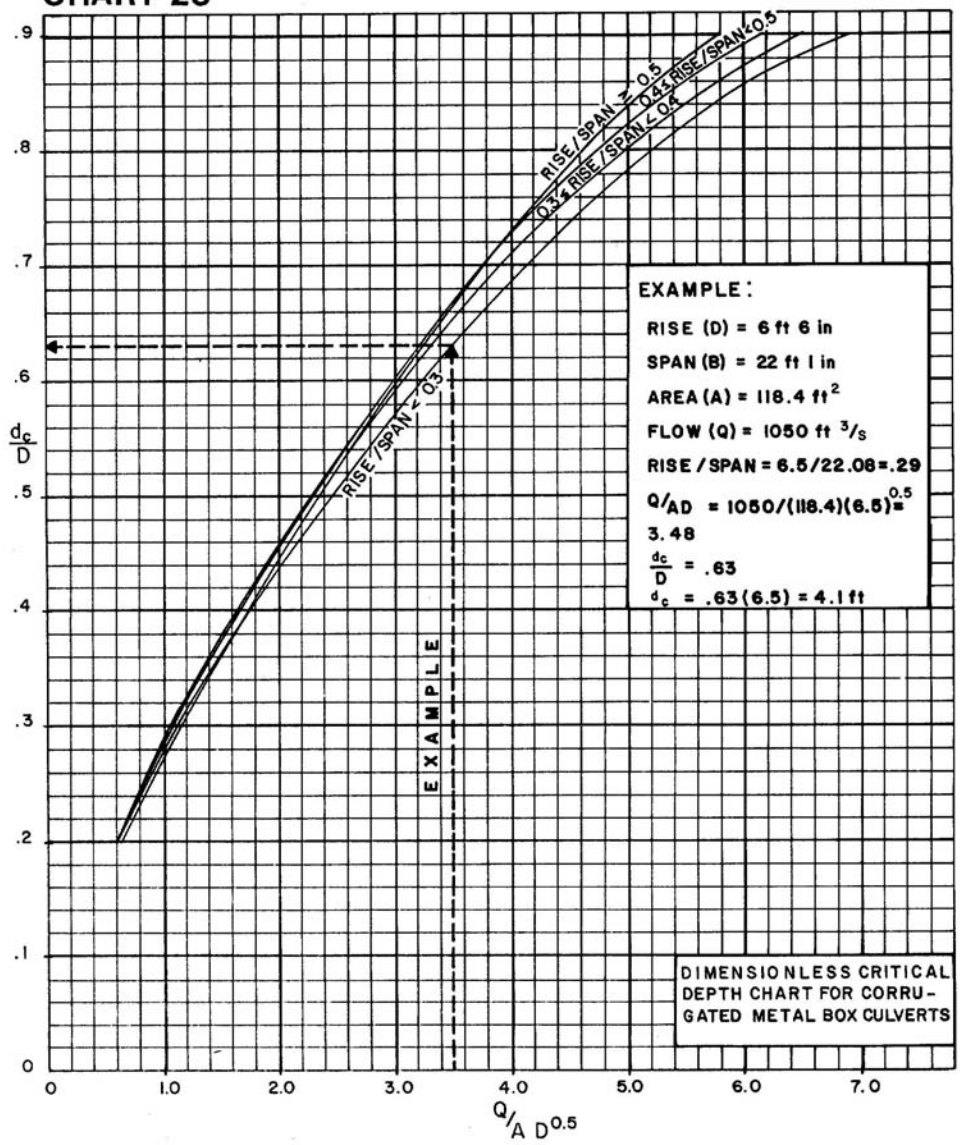
RISE/SPAN ≥ 0.5
0.4 ≤ RISE/SPAN < 0.5
0.3 ≤ RISE/SPAN < 0.4
RISE/SPAN < 0.3
EXAMPLE
EXAMPLE:
RISE (D) = 6 ft 6 in
SPAN (B) = 22 ft 1 in
AREA (A) = 118.4 ft²
FLOW (Q) = 1050 ft³/s
RISE / SPAN = 6.5/22.08=.29
Q/AD = 1050/(118.4)(6.5)^0.5 = 3.48
dc/D = .63
dc = .63(6.5) = 4.1 ft
DIMENSIONLESS CRITICAL DEPTH CHART FOR CORRUGATED METAL BOX CULVERTS
dc/D
Q/A D^0.5
0
.1
.2
.3
.4
.5
.6
.7
.8
.9
1.0
2.0
3.0
4.0
5.0
6.0
7.0

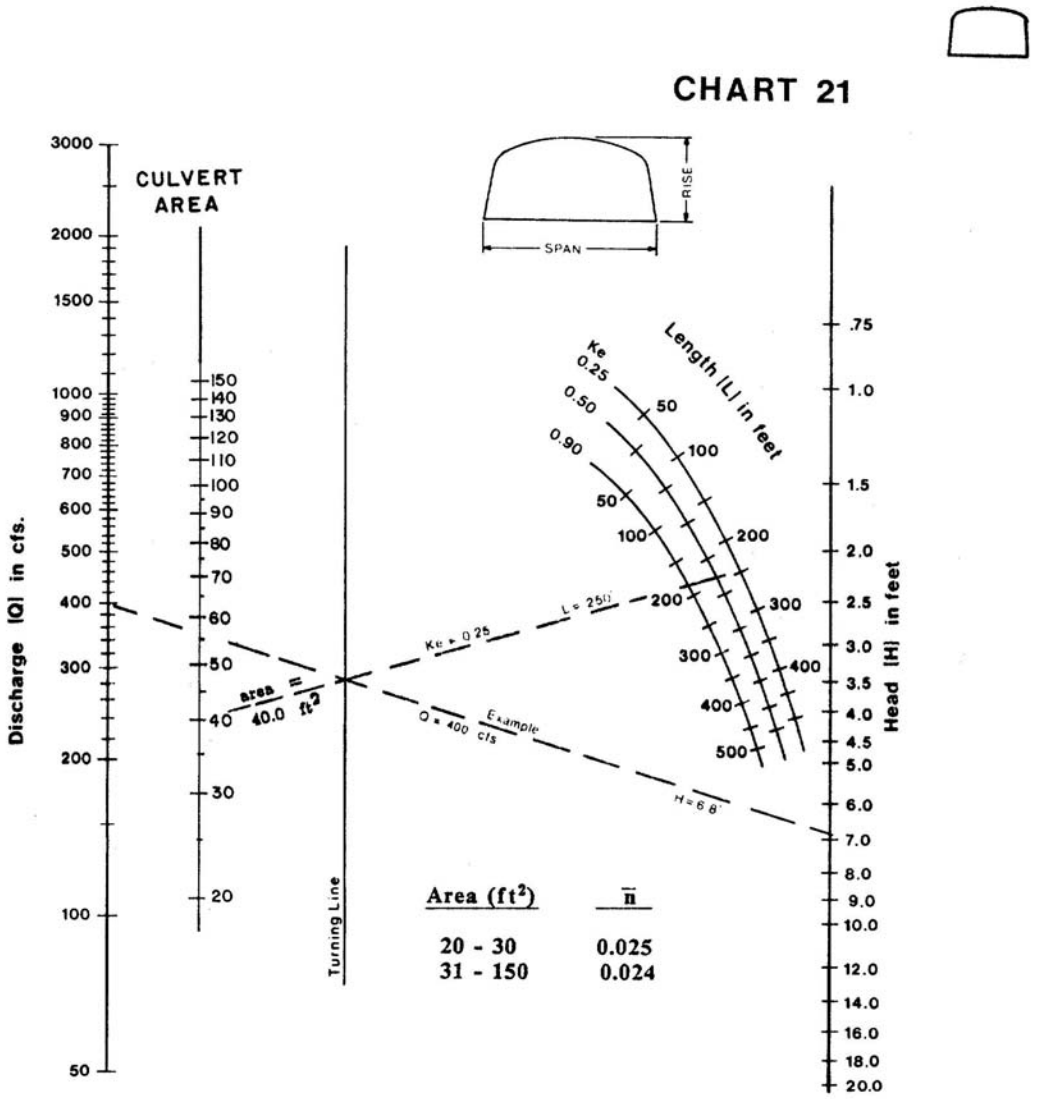

Nomographs adapted from material furnished by Kaiser Aluminum and Chemical Corporation

Duplication of this nomograph may distort scale

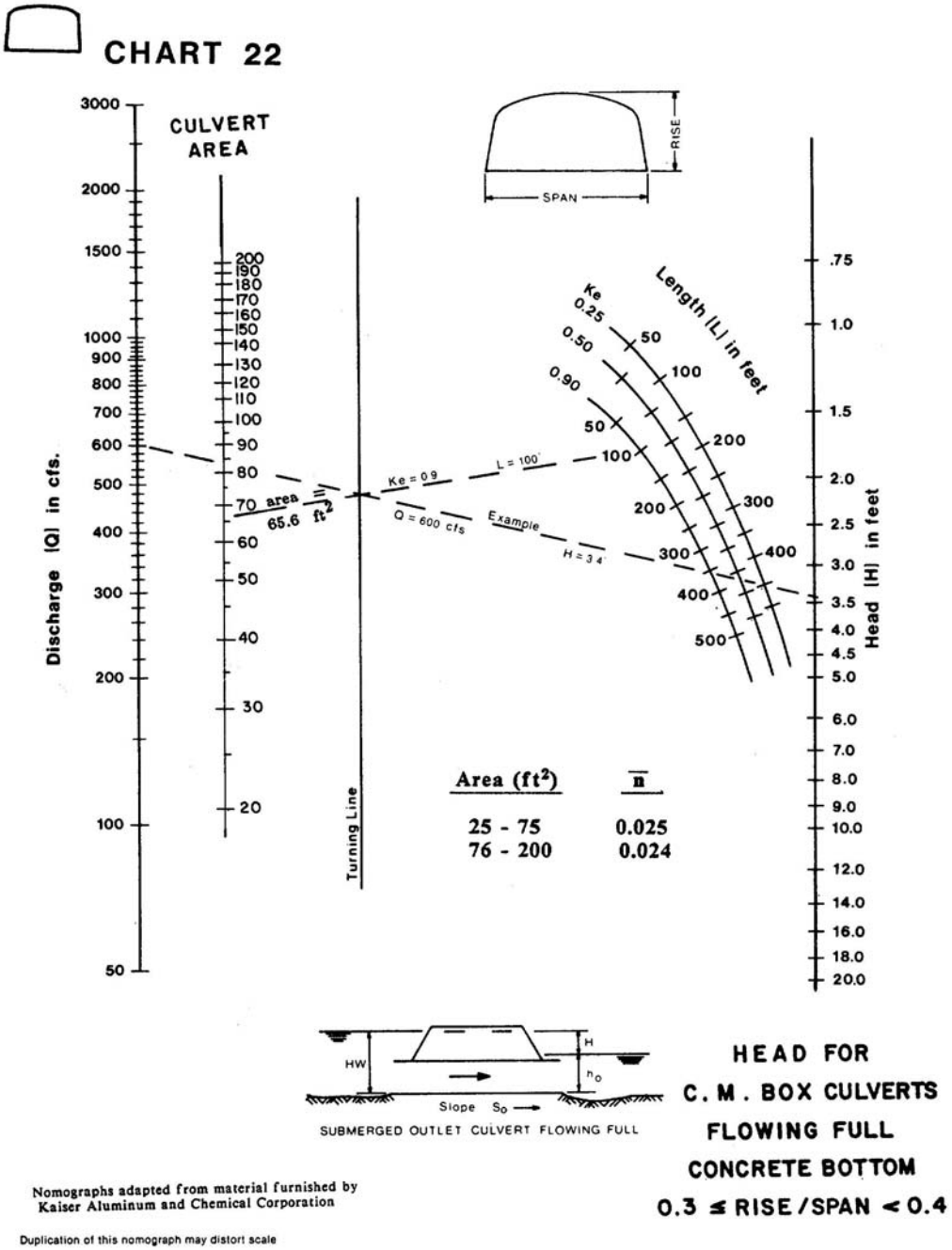
CHART 22
CULVERT AREA
Discharge (Q) in cfs.
Head (H) in feet
Length (L) in feet
Ke
0.25
0.50
0.90
SPAN
RISE
Turning Line
Ke = 0.9
L = 100'
Q = 600 cfs
Example
H = 3.4'
area = 65.6 ft²
Area (ft²)
n
25 - 75
0.025
76 - 200
0.024
HW
H
h_o
Slope S_o
SUBMERGED OUTLET CULVERT FLOWING FULL
HEAD FOR
C. M. BOX CULVERTS
FLOWING FULL
CONCRETE BOTTOM
0.3 ≤ RISE/SPAN < 0.4
Nomographs adapted from material furnished by
Kaiser Aluminum and Chemical Corporation
Duplication of this nomograph may distort scale

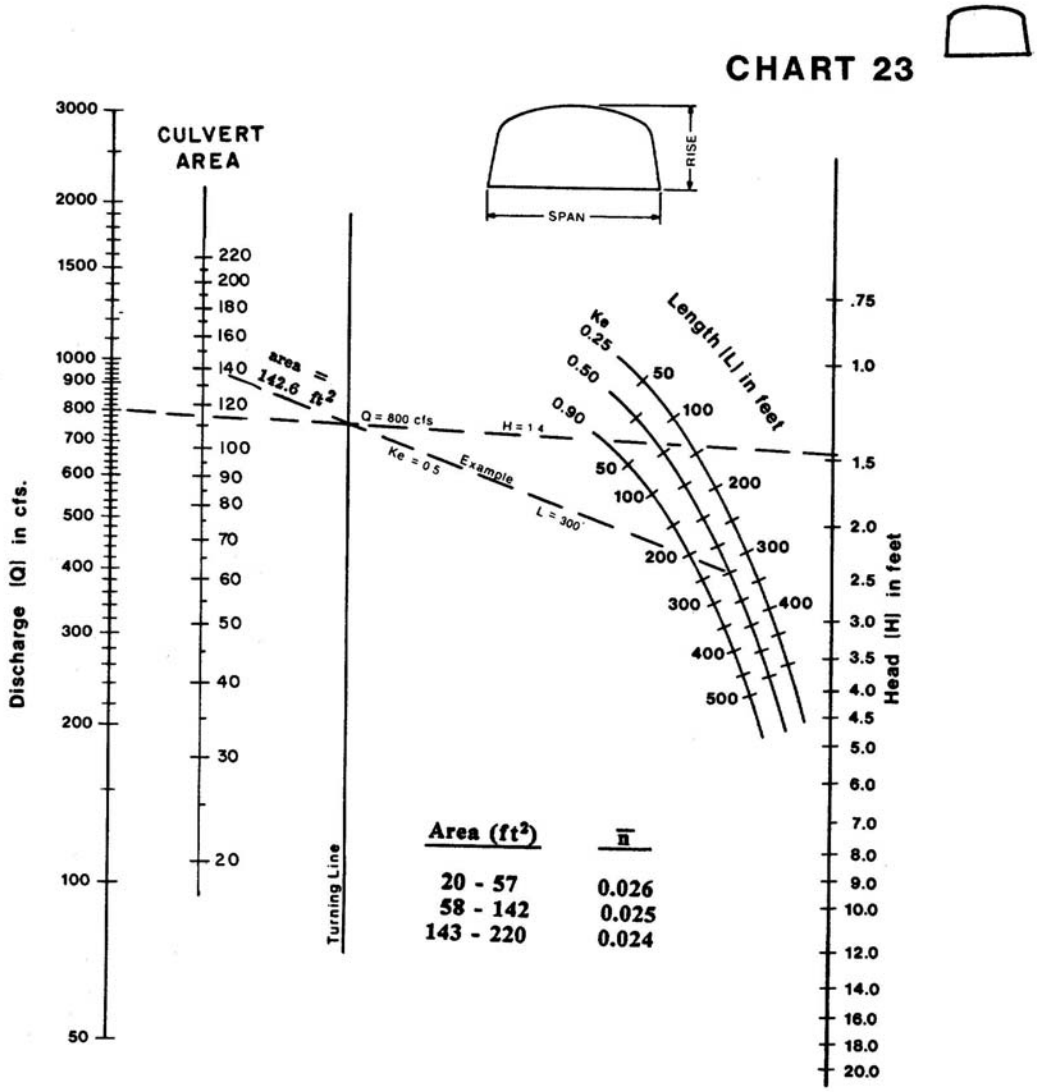

Nomographs adapted from material furnished by Kaiser Aluminum and Chemical Corporation

Duplication of this nomograph may distort scale

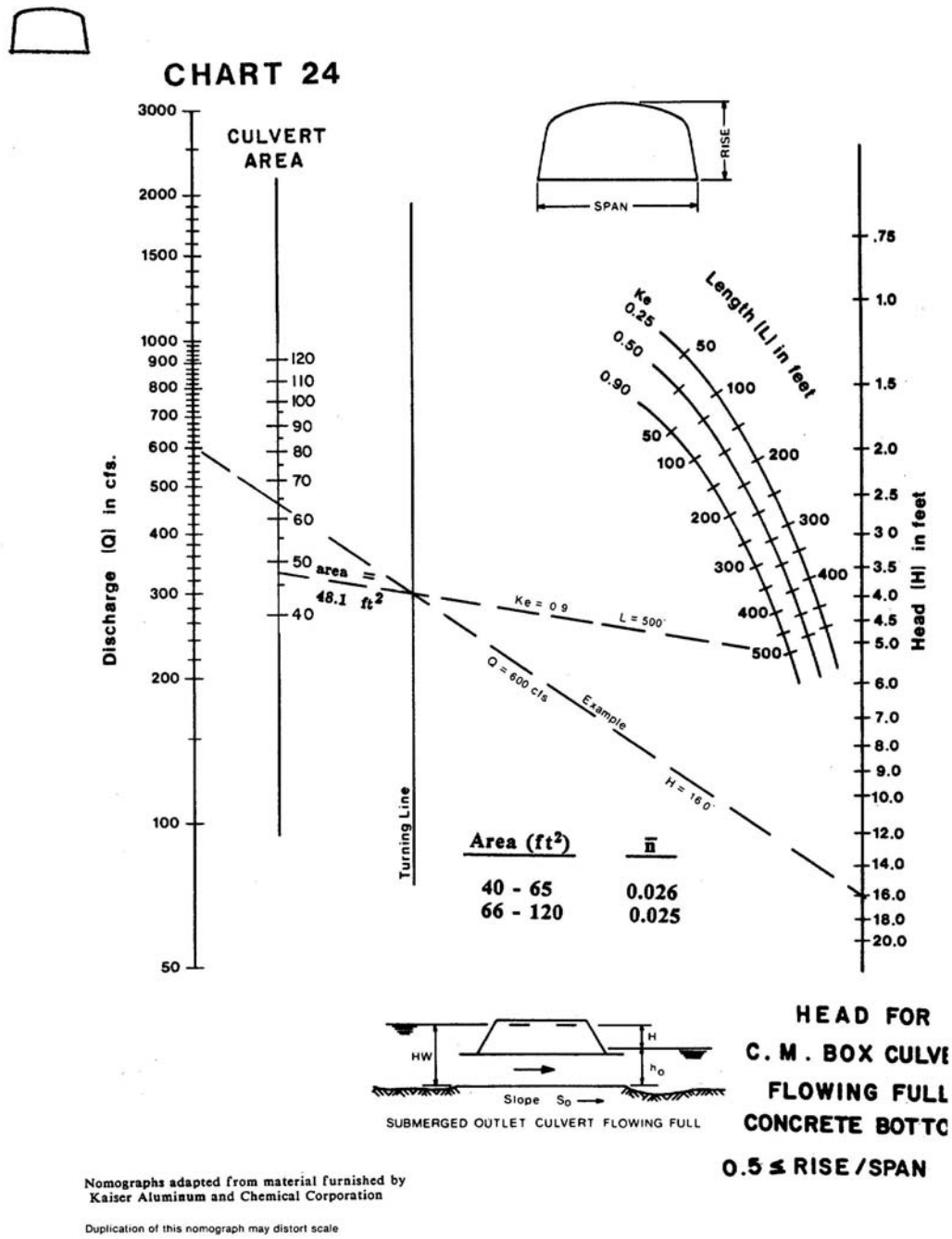

Nomographs adapted from material furnished by Kaiser Aluminum and Chemical Corporation

Duplication of this nomograph may distort scale

CHART 25

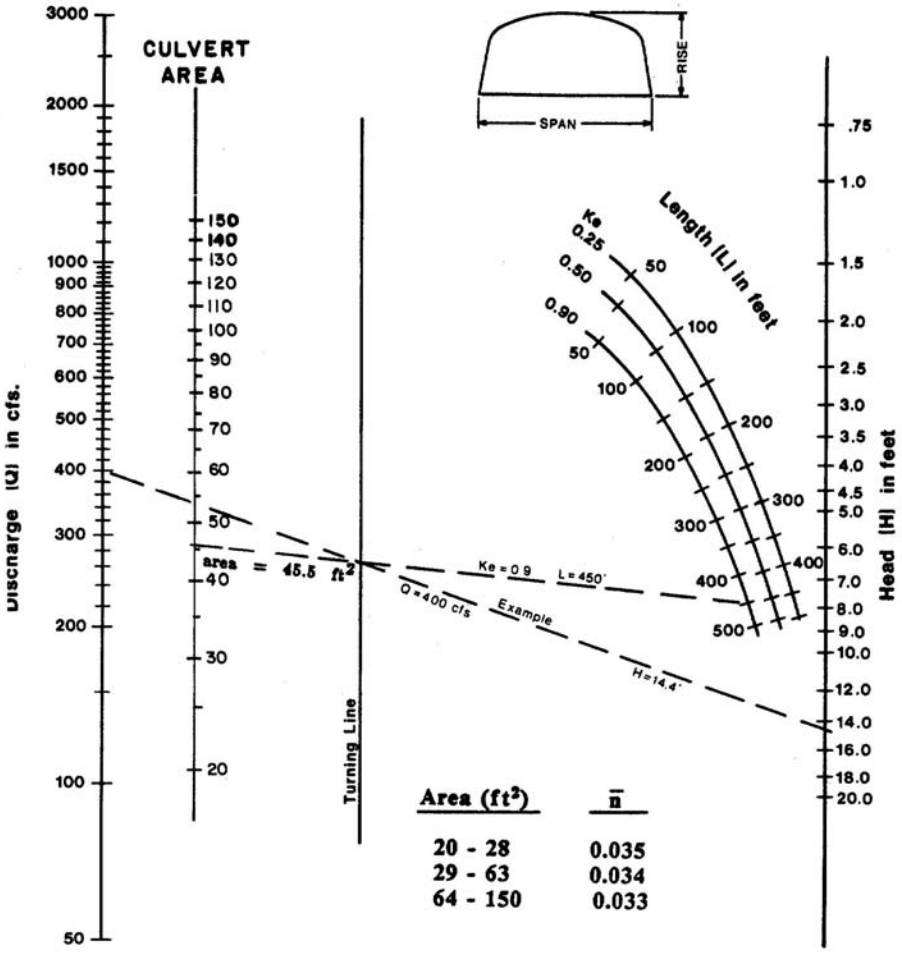

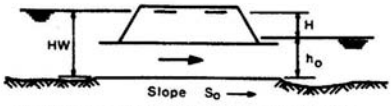

SUBMERGED OUTLET CULVERT FLOWING FULL

HEAD FOR
C. M. BOX CULVERTS
FLOWING FULL
CORRUGATED METAL BOTTOM
RISE / SPAN < 0.3

raphs adapted from material furnished by
r Aluminum and Chemical Corporation

ion of this nomograph may distort scale

CHART 26

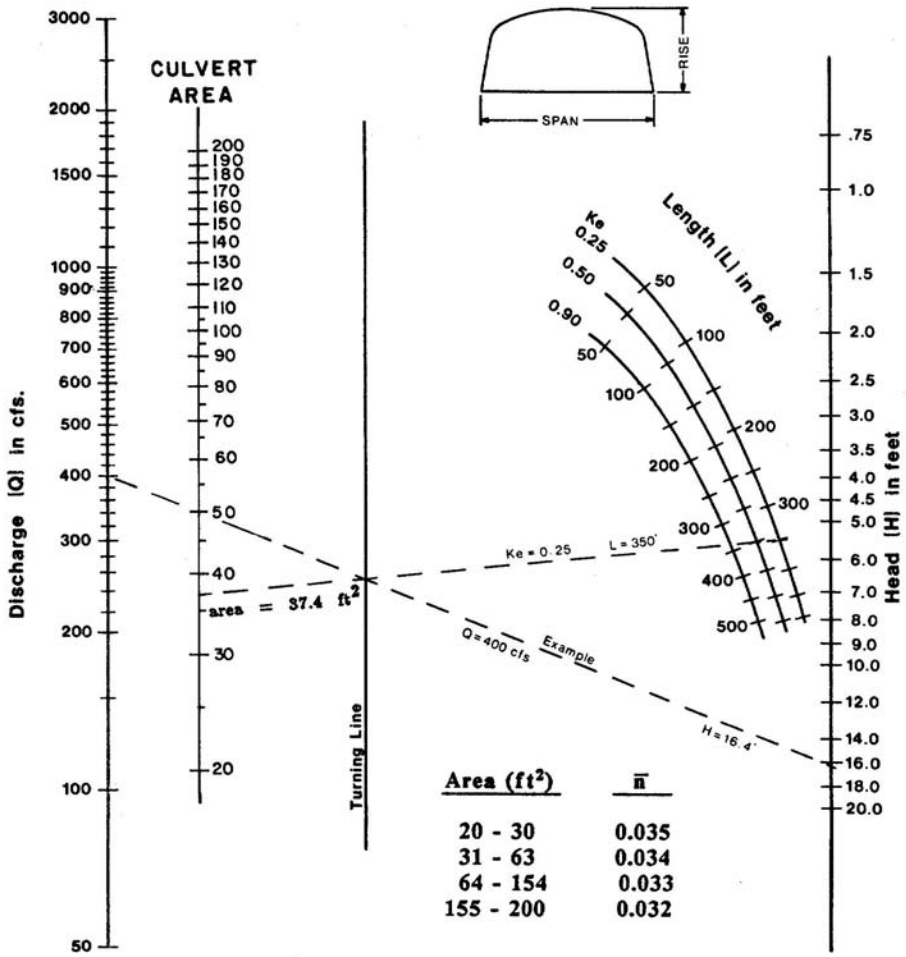

Area (ft^2)	$\bar{n}$
20 - 30	0.035
31 - 63	0.034
64 - 154	0.033
155 - 200	0.032

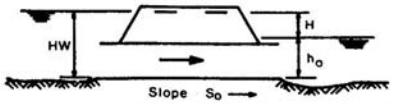

SUBMERGED OUTLET CULVERT FLOWING FULL

HEAD FOR C. M. BOX CULVERTS FLOWING FULL

CORRUGATED METAL BOTTOM

0.3 ≤ RISE / SPAN < 0.4

Nomographs adapted from material furnished by Kaiser Aluminum and Chemical Corporation

Duplication of this nomograph may distort scale

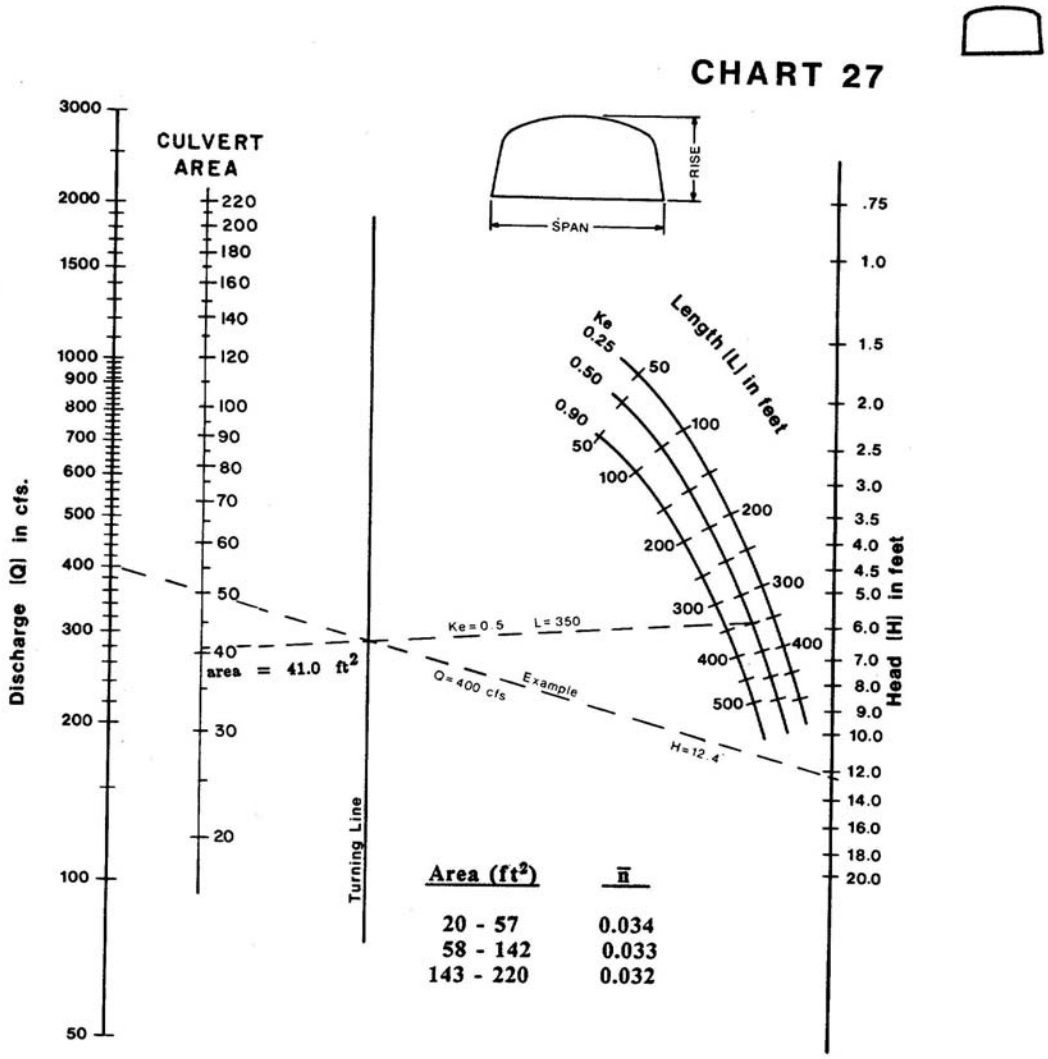

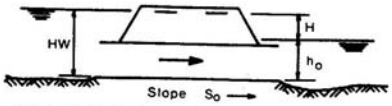

SUBMERGED OUTLET CULVERT FLOWING FULL

HEAD FOR C. M. BOX CULVERTS FLOWING FULL

CORRUGATED METAL BOTTOM

0.4 ≤ RISE / SPAN < 0.5

Nomographs adapted from material furnished by Kaiser Aluminum and Chemical Corporation

Duplication of this nomograph may distort scale

CHART 28

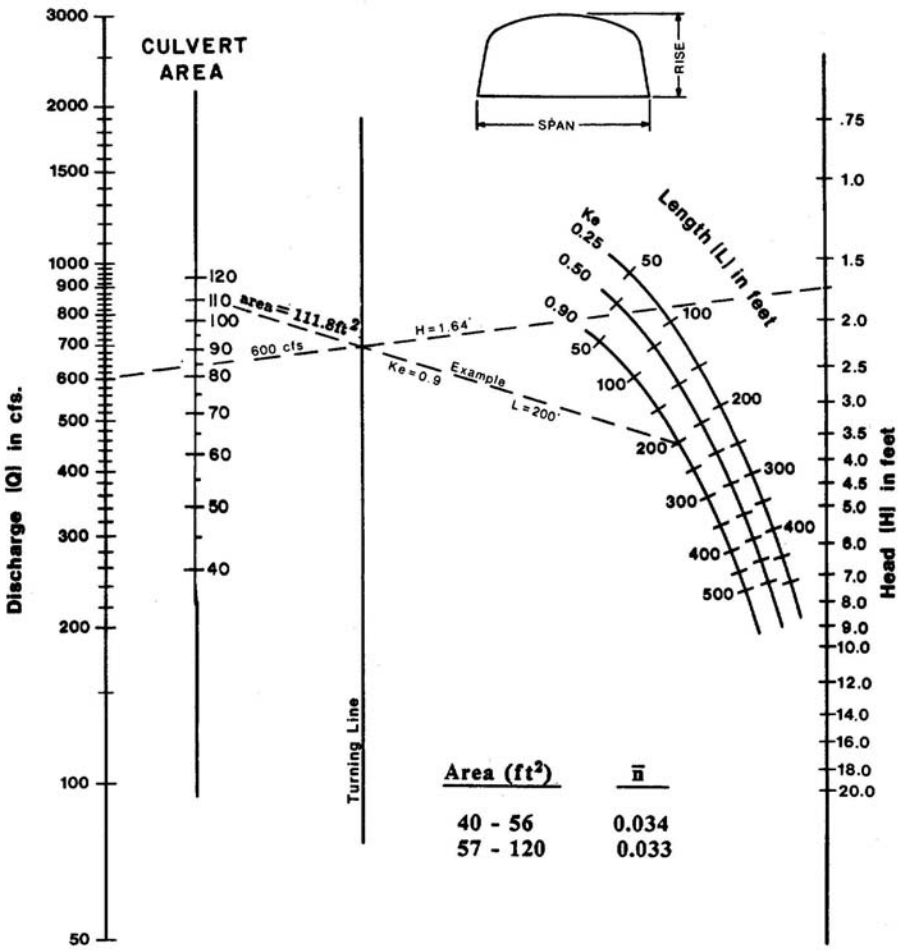

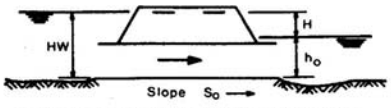

SUBMERGED OUTLET CULVERT FLOWING FULL

HEAD FOR
C. M. BOX CULVERTS
FLOWING FULL
CORRUGATED METAL BOTTOM
0.5 ≤ RISE/SPAN

Nomographs adapted from material furnished by Kaiser Aluminum and Chemical Corporation

Duplication of this nomograph may distort scale

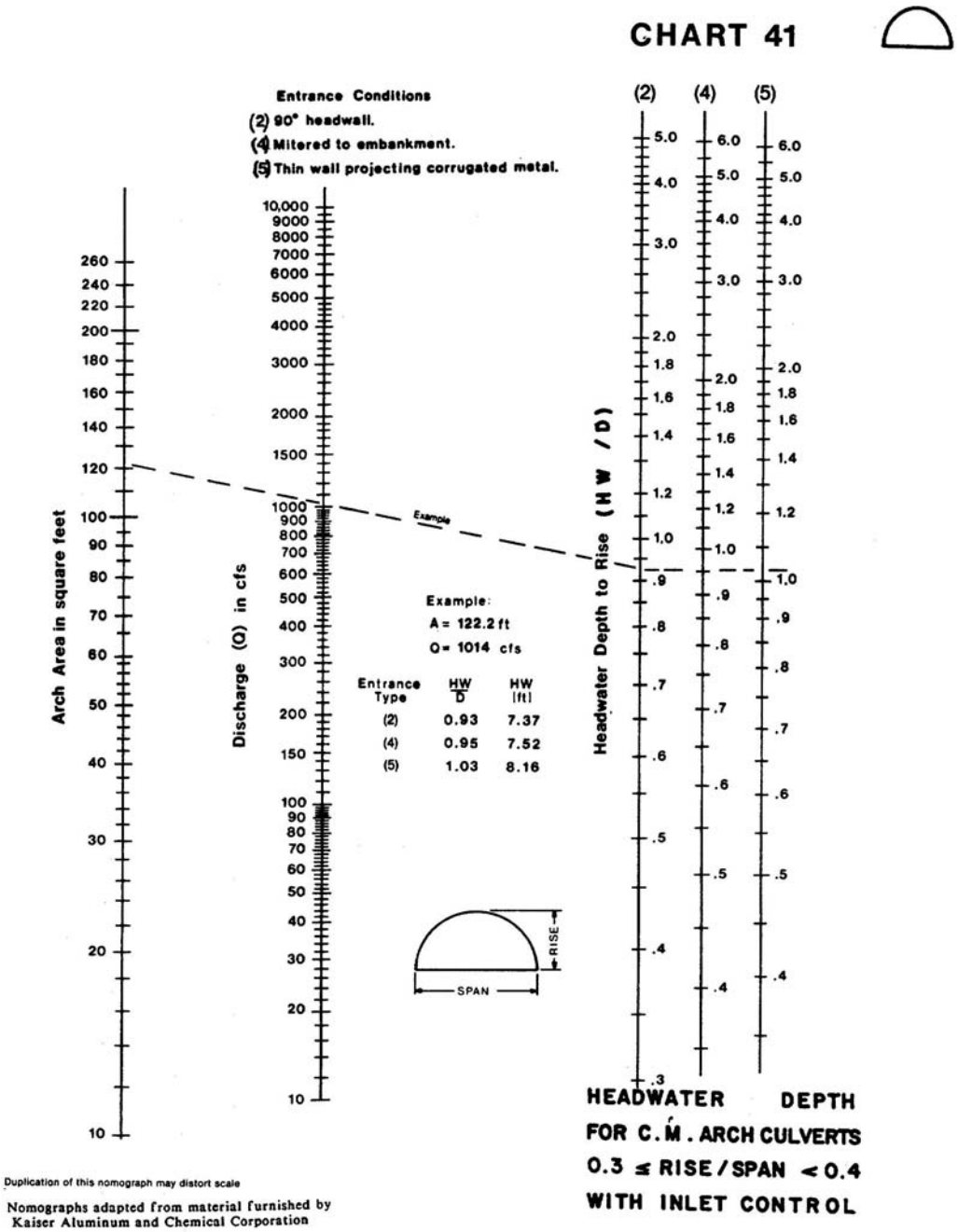
CHART 41
Entrance Conditions
(2) 90° headwall.
(4) Mitered to embankment.
(5) Thin wall projecting corrugated metal.
Arch Area in square feet
Discharge (Q) in cfs
Headwater Depth to Rise (HW/D)
(2)
(4)
(5)
Example
Example:
A = 122.2 ft
Q = 1014 cfs
Entrance Type | HW/D | HW (ft)
(2) | 0.93 | 7.37
(4) | 0.95 | 7.52
(5) | 1.03 | 8.16
RISE
SPAN
HEADWATER DEPTH
FOR C.M. ARCH CULVERTS
0.3 ≤ RISE/SPAN < 0.4
WITH INLET CONTROL
Duplication of this nomograph may distort scale
Nomographs adapted from material furnished by
Kaiser Aluminum and Chemical Corporation

CHART 42

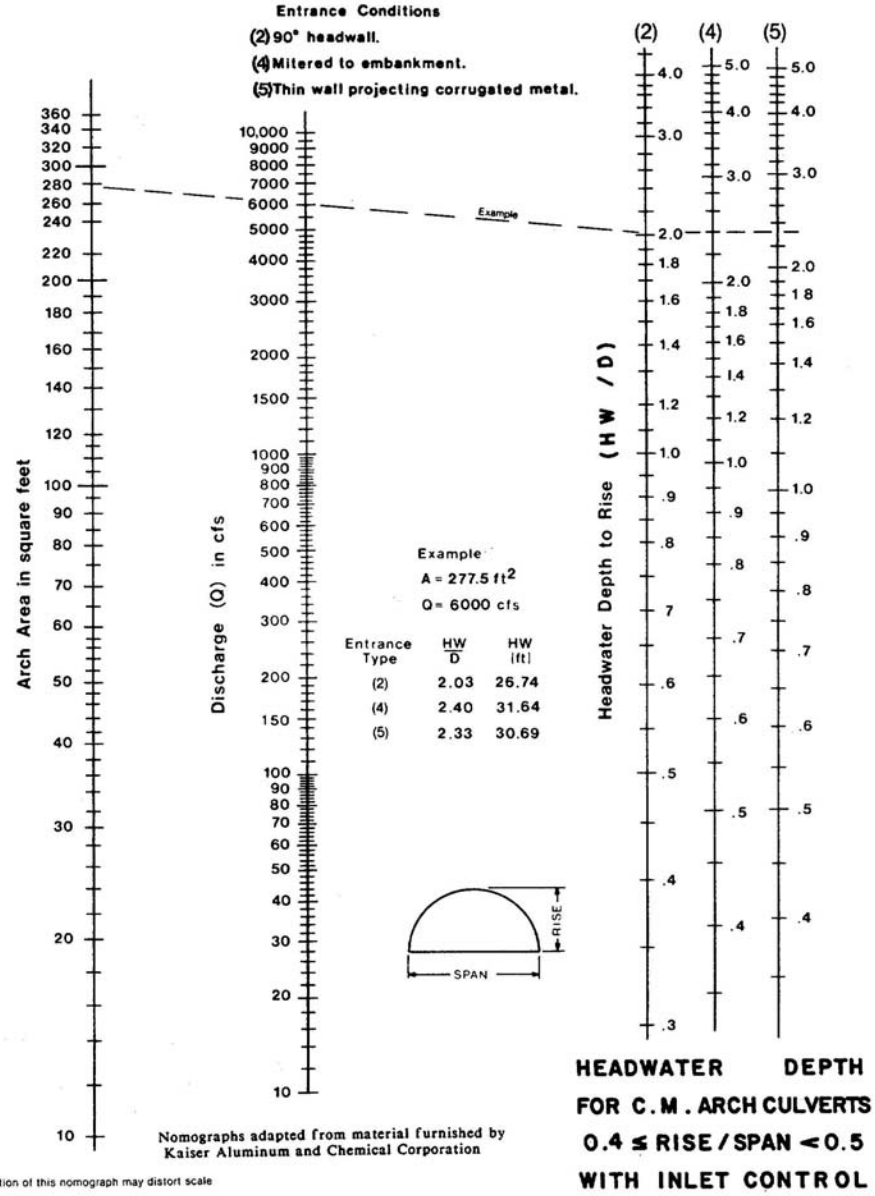
Entrance Conditions
(2) 90° headwall.
(4) Mitered to embankment.
(5) Thin wall projecting corrugated metal.
Arch Area in square feet
Discharge (Q) in cfs
Headwater Depth to Rise (HW / D)
Example
Example
A = 277.5 ft²
Q = 6000 cfs
Entrance Type | HW/D | HW (ft)
(2) | 2.03 | 26.74
(4) | 2.40 | 31.64
(5) | 2.33 | 30.69
RISE
SPAN
HEADWATER DEPTH
FOR C.M. ARCH CULVERTS
0.4 ≤ RISE / SPAN < 0.5
WITH INLET CONTROL
Nomographs adapted from material furnished by
Kaiser Aluminum and Chemical Corporation
Duplication of this nomograph may distort scale

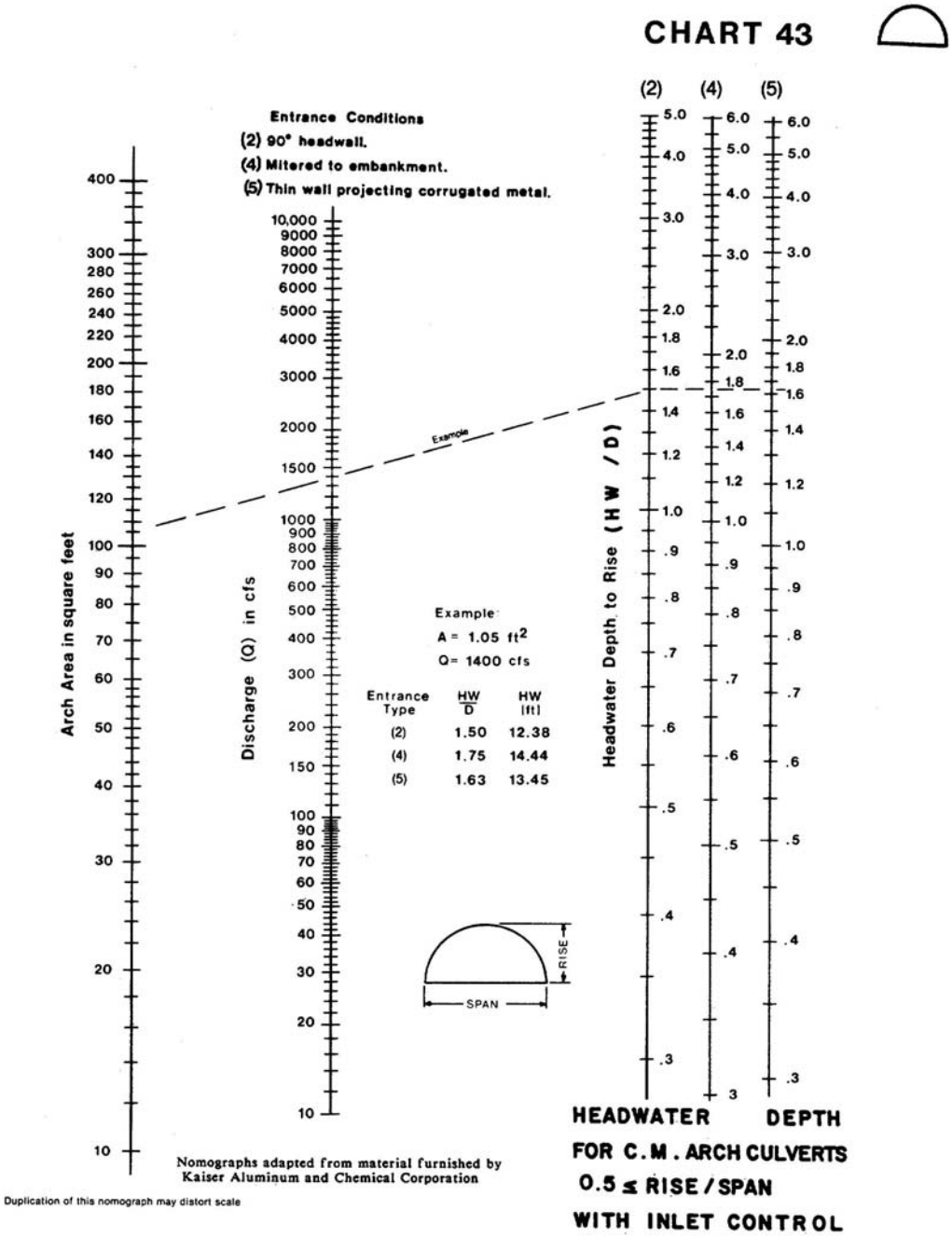
CHART 43
Entrance Conditions
(2) 90° headwall.
(4) Mitered to embankment.
(5) Thin wall projecting corrugated metal.
Arch Area in square feet
Discharge (Q) in cfs
Headwater Depth to Rise (HW / D)
(2) (4) (5)
Example
Example
A = 1.05 ft²
Q = 1400 cfs
Entrance Type | HW/D | HW (ft)
(2) | 1.50 | 12.38
(4) | 1.75 | 14.44
(5) | 1.63 | 13.45
RISE
SPAN
HEADWATER DEPTH
FOR C.M. ARCH CULVERTS
0.5 ≤ RISE / SPAN
WITH INLET CONTROL
Nomographs adapted from material furnished by
Kaiser Aluminum and Chemical Corporation
Duplication of this nomograph may distort scale

CHART 44

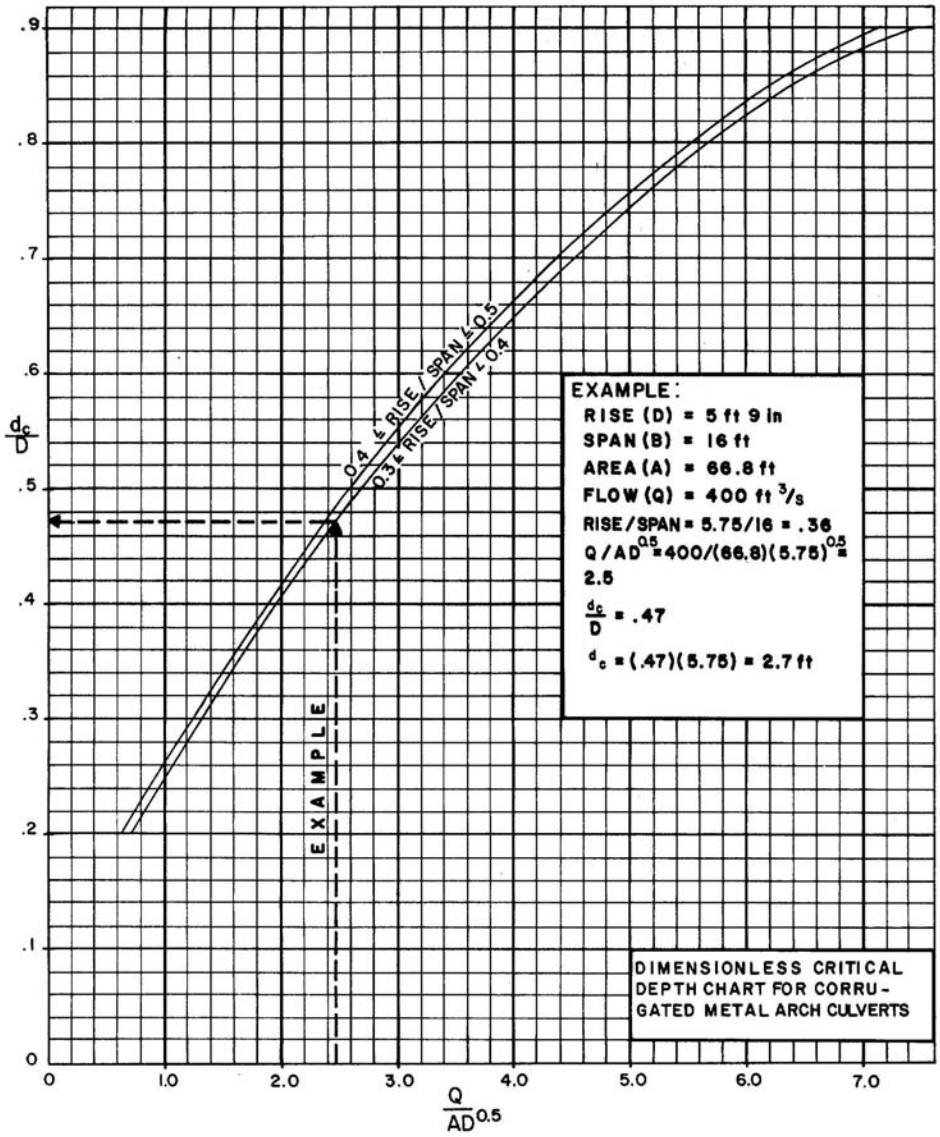
.9
.8
.7
.6
.5
.4
.3
.2
.1
0
$\frac{d_c}{D}$
0
1.0
2.0
3.0
4.0
5.0
6.0
7.0
$\frac{Q}{AD^{0.5}}$
0.4 ≤ RISE / SPAN ≤ 0.5
0.3 ≤ RISE / SPAN < 0.4
EXAMPLE
EXAMPLE:
RISE (D) = 5 ft 9 in
SPAN (B) = 16 ft
AREA (A) = 66.8 ft
FLOW (Q) = 400 ft ^{3}/s
RISE/SPAN = 5.75/16 = .36
$Q/AD^{0.5}$ = 400/(66.8)(5.75)$^{0.5}$ = 2.5
$\frac{d_c}{D}$ = .47
d_c = (.47)(5.75) = 2.7 ft
DIMENSIONLESS CRITICAL DEPTH CHART FOR CORRU-GATED METAL ARCH CULVERTS

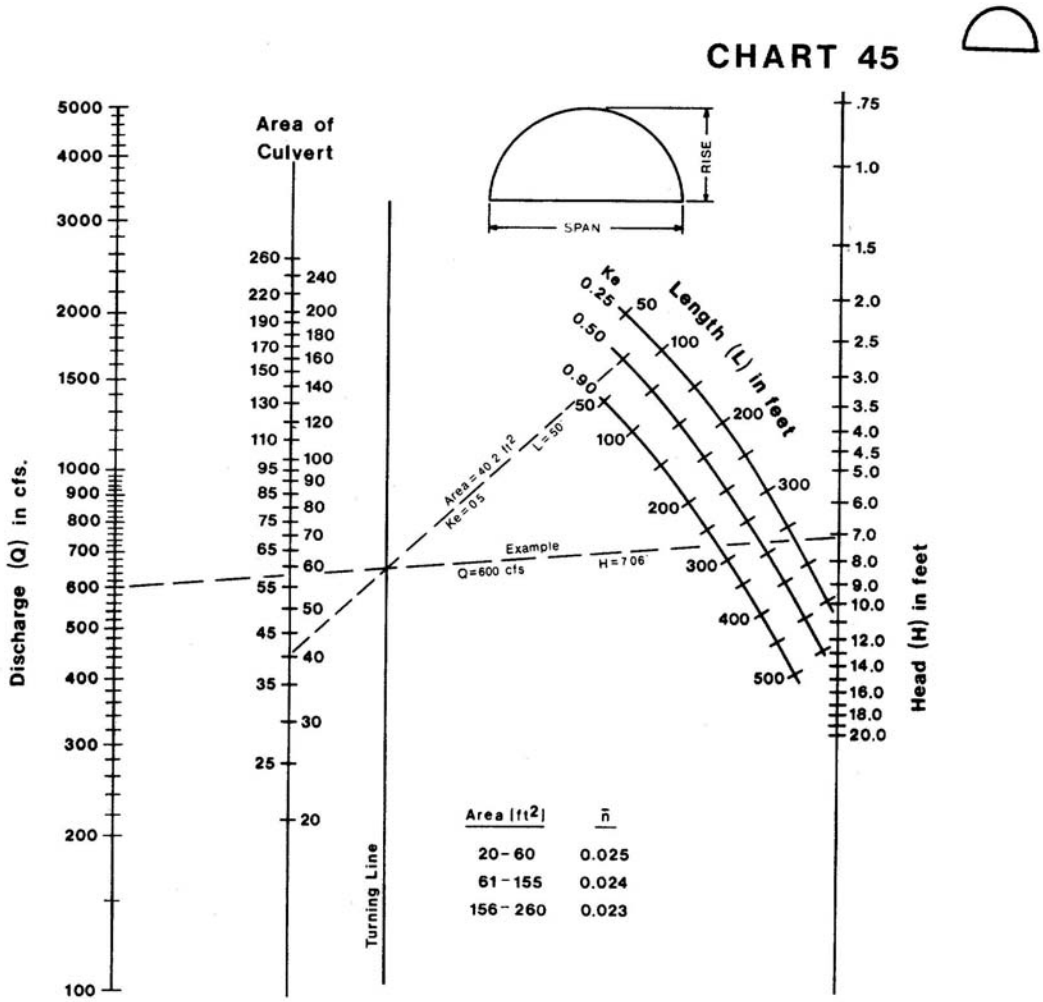

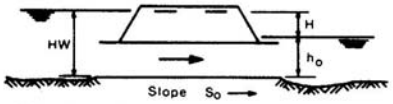

SUBMERGED OUTLET CULVERT FLOWING FULL

HEAD FOR C.M. ARCH CULVERTS FLOWING FULL CONCRETE BOTTOM

0.3 ≤ RISE / SPAN < 0.4

Nomographs adapted from material furnished by Kaiser Aluminum and Chemical Corporation

Duplication of this nomograph may distort scale

CHART 46

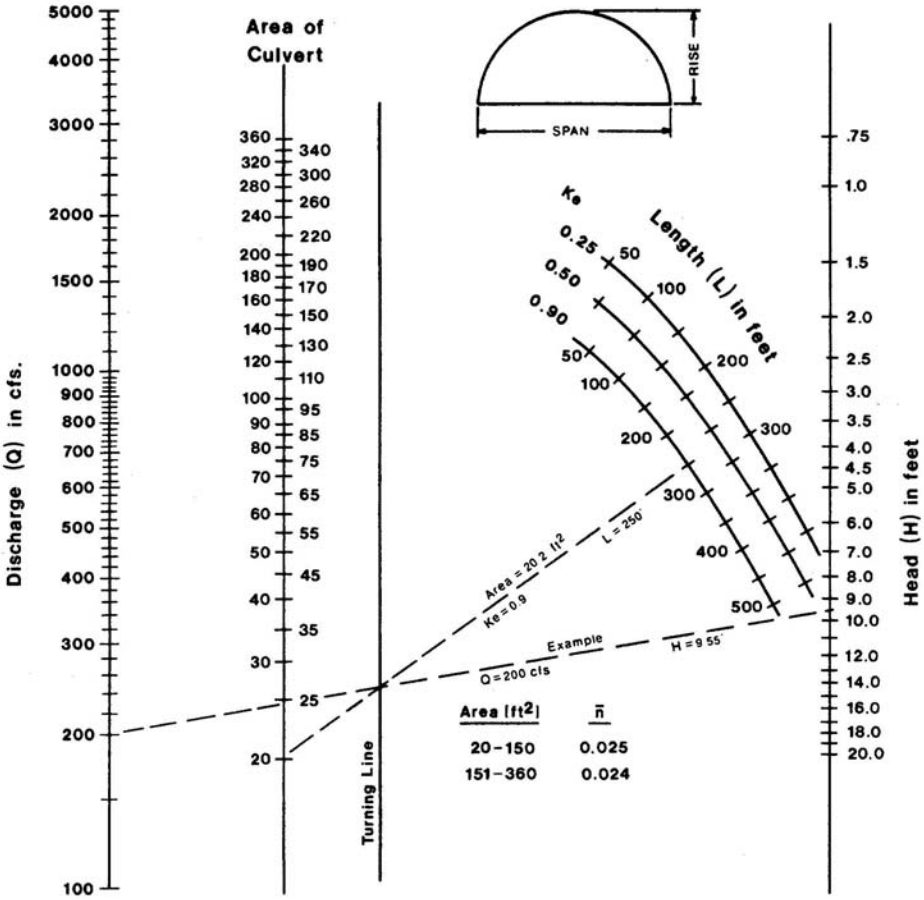

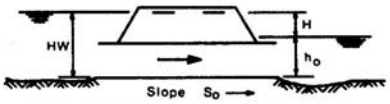

SUBMERGED OUTLET CULVERT FLOWING FULL

HEAD FOR
C.M. ARCH CULVERTS
FLOWING FULL
CONCRETE BOTTOM
0.4 ≤ RISE / SPAN < 0.5

Nomographs adapted from material furnished by Kaiser Aluminum and Chemical Corporation

Duplication of this nomograph may distort scale

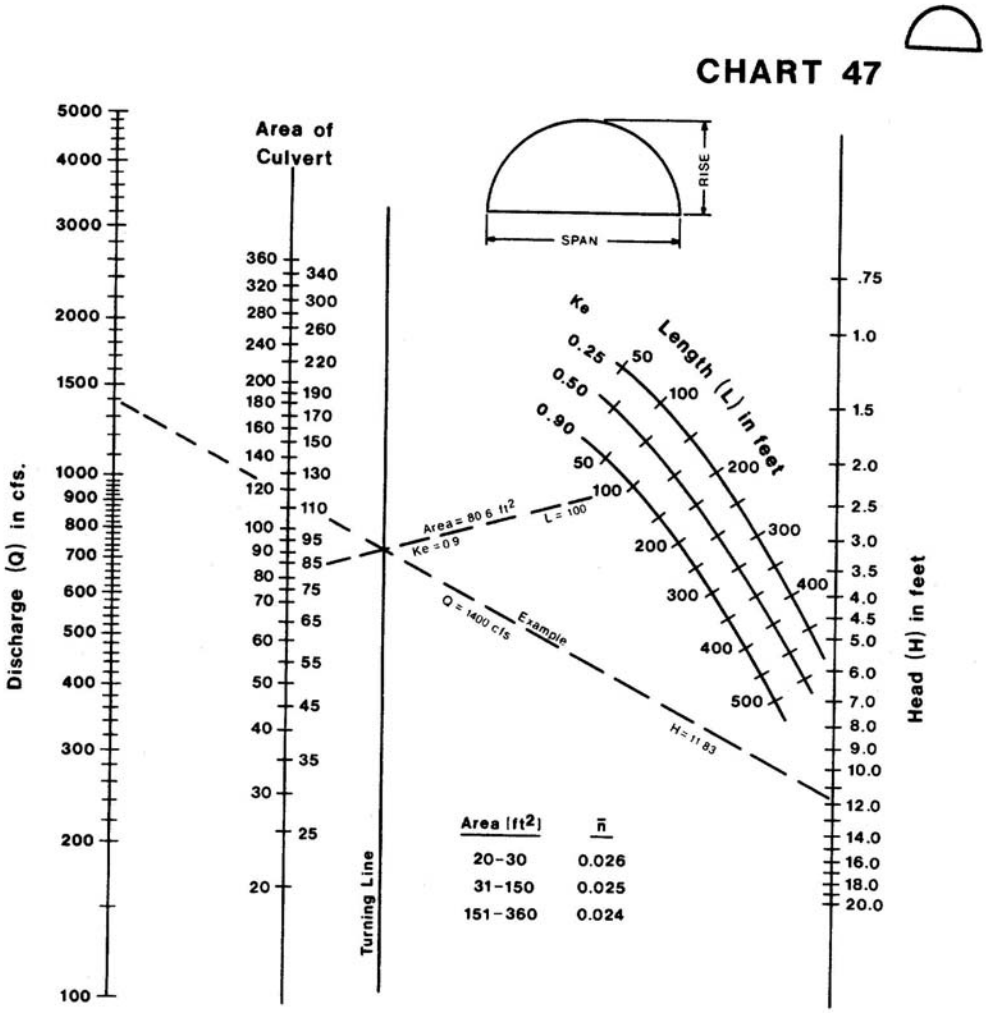

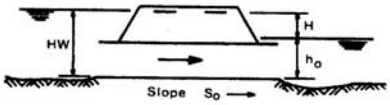

SUBMERGED OUTLET CULVERT FLOWING FULL

HEAD FOR C.M. ARCH CULVERTS FLOWING FULL CONCRETE BOTTOM

0.5 ≤ RISE / SPAN

Nomographs adapted from material furnished by Kaiser Aluminum and Chemical Corporation

Duplication of this nomograph may distort scale

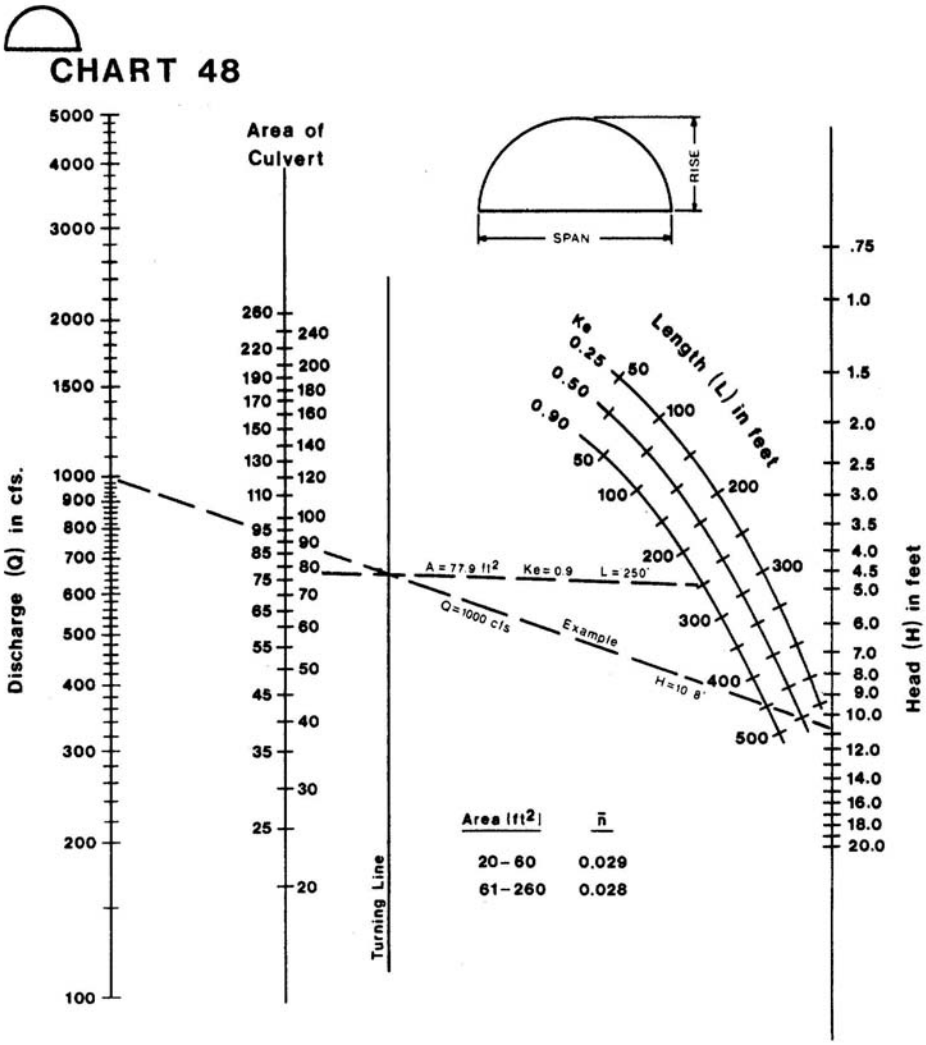

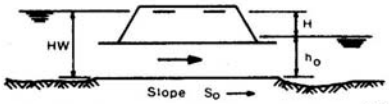

SUBMERGED OUTLET CULVERT FLOWING FULL

HEAD FOR C.M. ARCH CULVERTS FLOWING FULL

EARTH BOTTOM (n_b = 0.022)

0.3 ≤ RISE / SPAN < 0.4

Nomographs adapted from material furnished by Kaiser Aluminum and Chemical Corporation

Duplication of this nomograph may distort scale

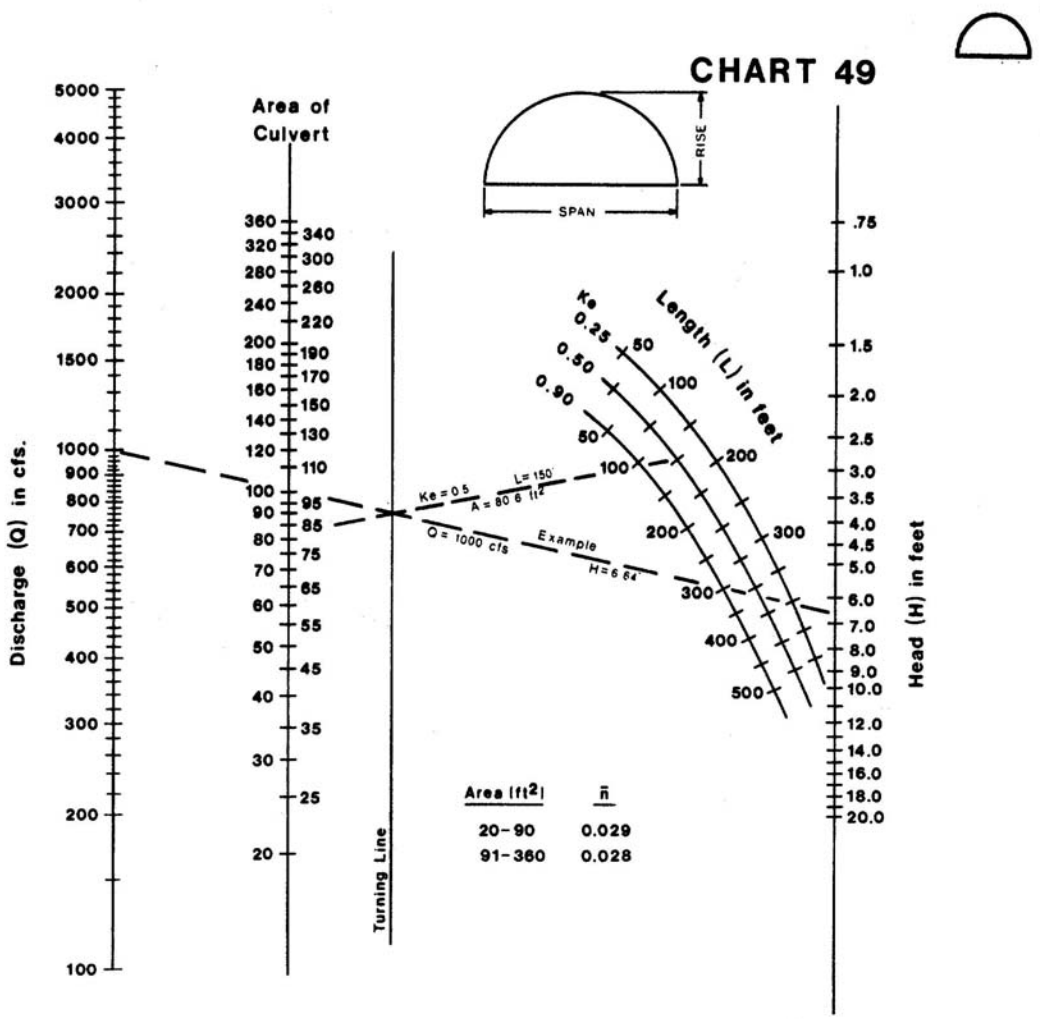

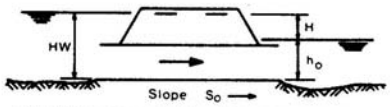

SUBMERGED OUTLET CULVERT FLOWING FULL

HEAD FOR
C.M. ARCH CULVERTS
FLOWING FULL
EARTH BOTTOM (n_b = 0.022)
0.4 ≤ RISE / SPAN < 0.5

Nomographs adapted from material furnished by Kaiser Aluminum and Chemical Corporation

Duplication of this nomograph may distort scale

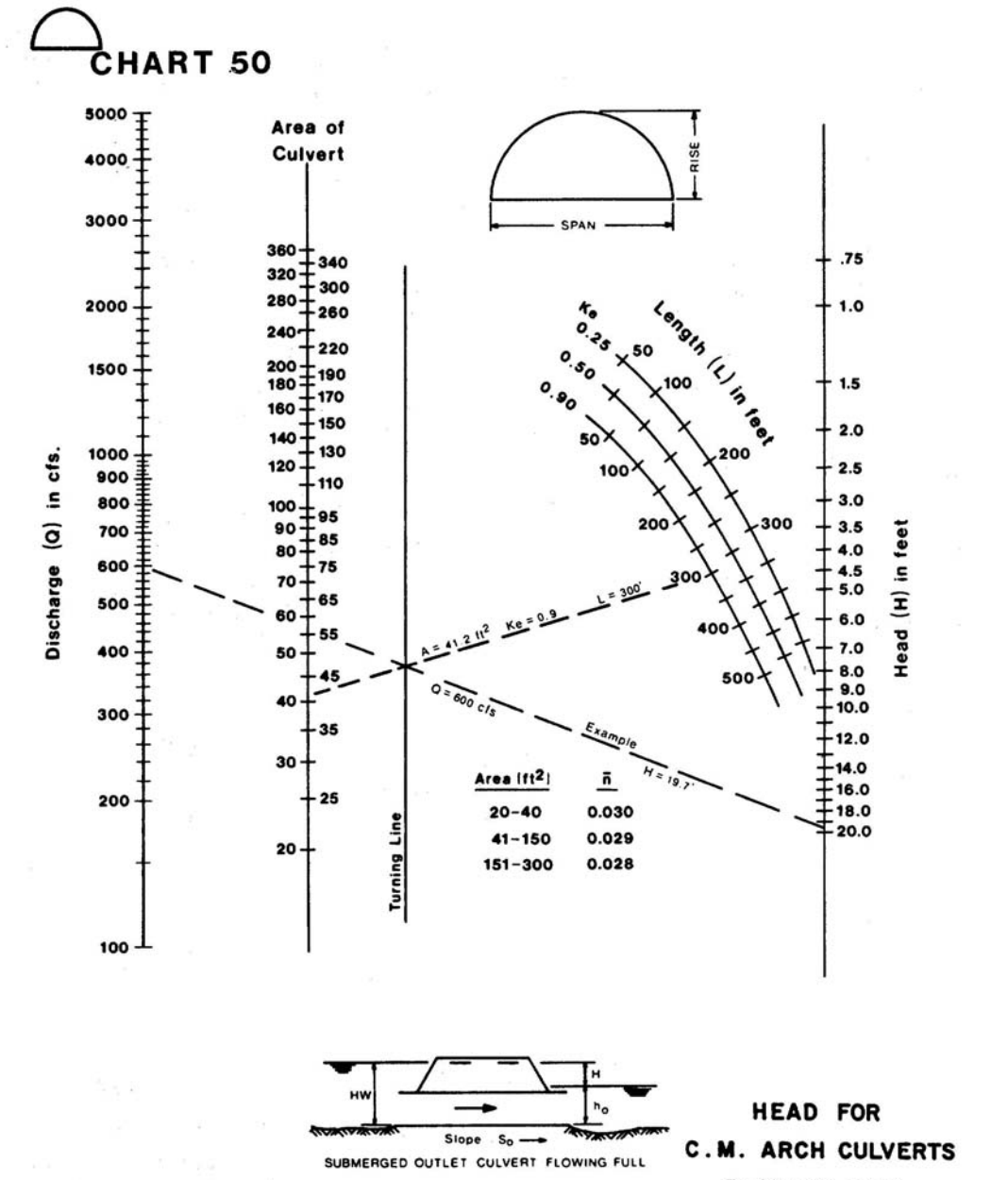
CHART 50
Discharge (Q) in cfs.
Area of Culvert
RISE
SPAN
Ke
0.25
0.50
0.90
Length (L) in feet
Head (H) in feet
Turning Line
A = 41.2 ft²
Ke = 0.9
L = 300'
Q = 600 cfs
Example
H = 19.7'
Area (ft²)
n̄
20-40
0.030
41-150
0.029
151-300
0.028
HW
H
h_o
Slope S_o
SUBMERGED OUTLET CULVERT FLOWING FULL
HEAD FOR
C.M. ARCH CULVERTS
FLOWING FULL
EARTH BOTTOM (n_b = 0.022)
0.5 ≤ RISE / SPAN
Nomographs adapted from material furnished by
Kaiser Aluminum and Chemical Corporation
Duplication of this nomograph may distort scale

APPENDIX WB — Workbook

PURPOSE

The purpose of this workbook is to provide example calculations demonstrating specific concepts presented in the Hydraulic Design Manual. Six example problems are included addressing riprap sizing, culvert design, Hydraulic Grade Line determinations, open channel design, inlet sizing, and detention basin performance. Each example problem references the appropriate figures and equations from the Hydraulic Design Manual. Figure numbers, table numbers, and equations that are not preceded by "D" indicate figures, tables, and equations from the Hydraulic Design Manual.

The solutions presented in this workbook do not represent the only method for solving the example problems. In many cases, software programs (proprietary and public domain) may be available to assist in performing the calculations. However, in the interests of presenting solutions that can be completed by anyone without having to own proprietary software, certain solution limitations have been imposed on this workbook. The engineer is encouraged to perform the calculations in a manner best suiting the specific project requirements.

Likewise, the presentation of calculations in this workbook represents only one possible presentation style. The engineer shall present the information in such a manner that another licensed Civil Engineer shall be able to follow the calculations and understand the methods, assumptions, and conclusions.

Workbook Example Topics

Example	Topic	Reference
WB-1	Inlet Design	Chapter 2
	1.1 Curb Inlet On-Grade	
	1.2 Curb Inlet In Sag	
	1.3 Grate Inlet On-Grade	
WB-2	Hydraulic Grade Line Determination	Chapter 3
	2.1 HGL for Open-Channel Flow	
	2.2 HGL for Pressure Flow	
WB-3	Culvert Design	Chapter 4
WB-4	Open Channel Design	Chapter 5
	4.1 Wetland-Bottom Channel	
	4.2 Riprap-Lined Channel	
WB-5	Detention Basin Design	Chapter 6
WB-6	Riprap Energy Dissipator Design	Chapter 7

[THIS PAGE INTENTIONALLY LEFT BLANK.]

DESIGN EXAMPLE WB-1:
Inlet Design Calculations

WB-1.1 CURB INLET ON-GRADE

The goal of this example is to show how to determine the length of inlet required to meet the Hydraulic Design Manual standards for a given situation.

A 4-foot curb inlet is located on a 2.5 percent grade. The peak 100-year flow in the gutter is 6 cfs and the curb height is 6 inches. Does the curb inlet meet the design criteria set forth in the Hydraulic Design Manual? If not, what size inlet is required? The following sketch helps illustrate this example.

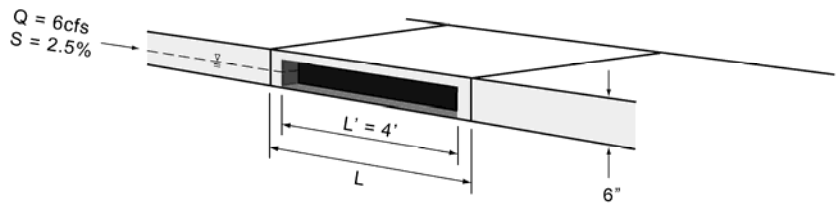

Depth and Velocity of Flow Against Curb

Because a standard curb and gutter have been used, Figure 2-2 provides the flow depth and velocity:

Depth of Flow: $y = 0.34$ ft

Velocity: $v = 3.8$ fps

Curb Length to Capture 100 Percent of Flow

Equation 2-3 can be used to calculate the curb inlet length necessary to capture 100 percent of the flow:

$$L_T = \frac{Q_{APPROACH}}{0.7(a+y)^{3/2}} = \frac{6.0}{0.7(0.33+0.34)^{3/2}} = 15.5ft$$

Because a 15.5-foot inlet is required to capture 100 percent of the flow and the example problem inlet is only 4 feet long, complete capture will not occur.

Curb Inlet Efficiency

Equation 2-4 is used to compute the curb inlet efficiency:

$$E = 1 - \left[1 - \left(\frac{L'}{L_T}\right)\right]^{1.8} = 1 - \left[1 - \left(\frac{4.0}{15.5}\right)\right]^{1.8} = 0.42$$

Thus, the current inlet only captures 42 percent of the peak 100-year flow, and does not meet the minimum 85 percent efficiency standard.

Flow Captured By and Flow Bypassing Inlet

Equation 2-6 is used to determine the flow captured by the inlet:

$$Q_{INTERCEPT} = EQ_{APPROACH} = 0.42 * 6 = 2.5cfs$$

The flow that bypasses the inlet is then the difference between the total flow and that captured, Equation 2-7:

$$Q_{BYPASS} = Q_{APPROACH} - Q_{INTERCEPT} = 6 - 2.5 = 3.5cfs$$

This bypassed flow would be added to the design flow of the next downstream inlet.

Length of Inlet to Meet 85 Percent Capture Requirement

Equation 2-5 is used to compute the minimum length necessary to capture at least 85 percent of the peak flow:

$$L'_{E=0.85} = 0.65L_T = 0.65 * 15.5 = 10.1ft$$

Therefore, the minimum inlet opening length is L'=11 feet, and the total inlet length specified on the plans will be L=12 ft.

WB-1.2 CURB INLET IN SAG

The goal of this example is to show how to determine the length of inlet required to meet the Hydraulic Design Manual standards for a given situation.

A 4-foot curb inlet is located in a sag. The peak 100-year flow approaching the inlet in the gutter is 12 cfs. The road cross slope is 2 percent and the curb height is 6 inches. Does the curb inlet meet the design criteria set forth in the Hydraulic Design Manual? If not, what size inlet is required? The following sketch helps illustrate this example.

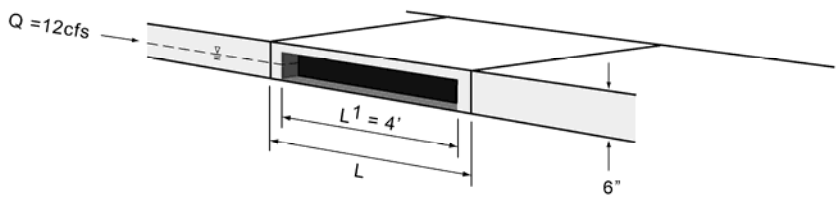

Flow Capture of Curb Inlet

Equation 2-8 determines the flow captured by a curb inlet in a sag condition:

$$Q = C_W L_W d^{3/2}$$

Because a curb inlet in a sag needs to capture 100 percent of the flow, and we do not want flows overtopping the curb during the 100-year event, we assume a depth of 9.9 inches (just below the San Diego Regional Standard B-Type inlet opening dimension) and solve Equation 2-8 for the curb length required. From Table 2-1, the weir coefficient for curb inlets C_W=3.0. Substituting into Equation 2-8, this yields:

$$Q = 12.0 = C_W L_W d^{3/2} = 3.00 * L_W * \left(\frac{9.9}{12}\right)^{3/2} = 12.0 cfs$$

$$L_W = \frac{6.0}{3.0 * \left(\frac{9.9}{12}\right)^{3/2}} = 5.33 ft$$

Since 5.33 feet is longer than the current inlet length, the inlet will not capture 100 percent of the flow without overtopping the curb. The inlet should be increased in size to a 6-foot opening to meet the design standard.

Because the depth of water against the curb opening is limited to the height of the curb, checking for orifice conditions is not necessary. However, as water depths increase in elevation above the top of the opening, a check for orifice conditions should be made.

The final step of the design would be to verify the emergency overflow path(s) for flows should the inlet become completely blocked.

WB-1.3 GRATE INLET ON-GRADE

The goal of this example is to show how to determine the length of inlet required to meet the Hydraulic Design Manual standards for a given situation.

A standard San Diego Regional Standard Drawing D-15 grate inlet is located on-grade. The peak 100-year flow approaching the inlet in the gutter is 6 cfs. The road cross slope is 2 percent and the curb height is 6 inches. Does the grated inlet meet the design criteria set forth in the Hydraulic Design Manual? The following sketches help illustrate this example.

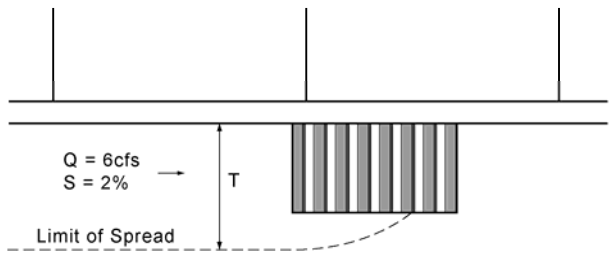

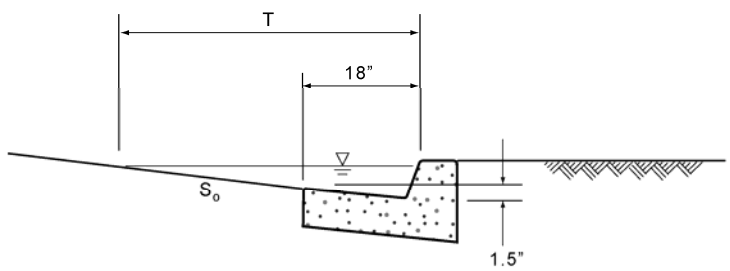

Determine the Required Inlet Capacity

$$Q_{REQUIRED} = 0.85Q_{TOTAL} = 0.85 * 6.0cfs = 5.1cfs$$

Determine Flow Spread Width

Figure 2-2 can be used to determine the depth of flow and velocity (y=0.34 ft, v=3.75 fps). Rounding the depth to 4 inches, the spread width can be calculated:

$$T = 18" + (y - 1.5")/S_O = 18" + (4" - 1.5")/0.02 = 143" = 11.92ft$$

Determine Amount of Flow at the Front of the Grate

Equation 2-11 can be used to determine the flow approaching the front of the grate, using effective width of

$$Q_W = Q_{APPROACH}\left[1-\left(1-\frac{W}{T}\right)^{2.67}\right] = 6.0*\left[1-\left(1-\frac{0.8}{11.92}\right)^{2.67}\right] = 1.0cfs$$

Determine the Flow at the Side of the Grate

The flow reaching the side of the grate is the difference between the total flow and the flow approaching the front of the grate:

$$Q_S = Q_{APPROACH} - Q_W = 6.0 - 1.0 = 5.0cfs$$

Determine the Flow Captured by the Front of the Grate

Because the velocity is higher than the splash-over velocity (2 fps for a Regional Standard D-15), Equation 2-13 can be used to determine the flow captured by the front edge of the grate:

$$Q_{INTERCEPT,FRONT} = \left(1-0.09\left(V-V_O\right)\right)Q_W = \left(1-0.09*\left(3.75-2.0\right)\right)*1.0$$

$$Q_{INTERCEPT,FRONT} = 0.84cfs$$

Flow Captured by the Side of the Grate

Equation 2-14 can be used to determine the flow captured by the side of a grate:

$$Q_{INTERCEPT,SIDE} = \frac{Q_S}{\left(1+\frac{0.15V^{1.8}}{S_X L^{2.3}}\right)} = \frac{5.0}{\left(1+\frac{0.15*3.75^{1.8}}{0.02*1.5^{2.3}}\right)} = 0.15cfs$$

Total Captured Flow

The total captured flow is the sum of the front and side edges:

$$Q_{INTERCEPT,TOTAL} = Q_{INTERCEPT,SIDE} + Q_{INTERCEPT,FRONT} = 1.0 + 0.15 = 1.15cfs$$

1.15 cfs is much less than the 85-percent capture design standard of 5.1 cfs. Therefore, additional grate inlets or an alternative inlet configuration such as a curb inlet or combination inlet will be required.

DESIGN EXAMPLE WB-2:
Hydraulic Grade Line Calculations

WB-2.1 OPEN CHANNEL FLOW

The goal of this example is to show how to determine the HGL in a pipe flowing under open channel conditions.

An 18-inch HDPE (Corrugated) pipe at 1 percent carries a peak 100-year discharge of 5 cfs. Determine the HGL in the pipe at the upstream end of the cleanout. The following sketch helps illustrate this example.

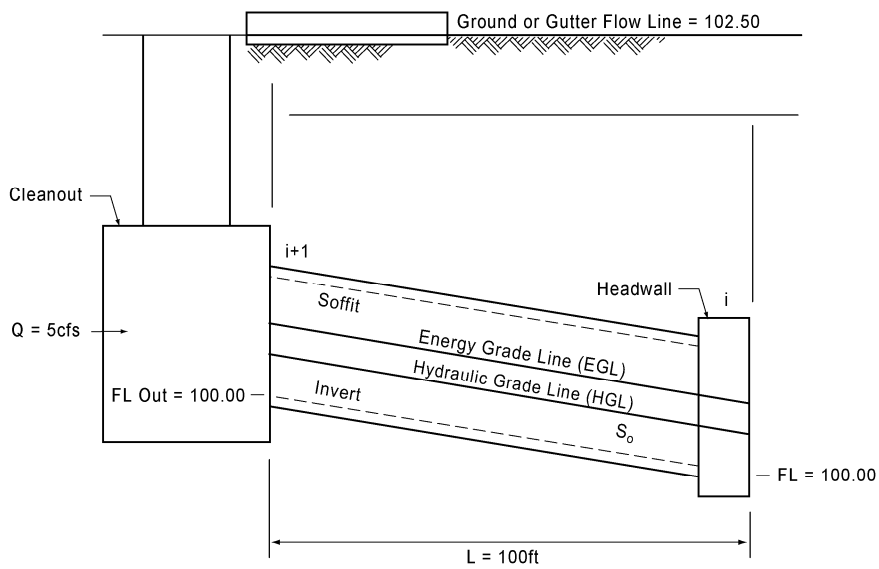

Determine Normal Depth

Equation 3-1 can be used to determine the normal depth of flow within the pipe:

$$Q = \frac{1.49}{n} A R^{2/3} S^{1/2}$$

Based on the information provided, we know the flow rate (Q=5 cfs), Manning roughness coefficient (n=0.024), and the slope (S=0.010). Therefore, we can solve for the depth using the geometric relationships provided in Figure 5-16 and Figure 5-17.

Normal Depth of Flow: y_N = 1.1 ft

Velocity: v =3.63 fps

Determine Pipe Losses Due to Friction

If the pipe flows are subcritical, the friction slope and longitudinal pipe slopes are approximately the same. Assuming the normal depth of flow in the pipe is equivalent to the hydraulic depth, the Froude Number can be calculated using Equation 5-10:

$$FR = \frac{v}{\sqrt{g\, y_N}} = 0.61$$

Because FR=0.61<1.0, the flow is subcritical and $S_f \approx S_L$ (simplified for example, in practice friction slope needs to be calculated). Therefore, Equation 3-7 can be used to determine the friction loss:

$$H_f = S_f L = 0.01 * 100 = 1.00 ft$$

Determine Structure Losses Due to the Cleanout

Equation 3-18 may be used to determine the loss due to the cleanout:

$$H_L = K \frac{v_o^2}{2g}$$

In this case, the outlet velocity can be assumed to be equal to the velocity within the pipe, and thus may be determined using the Equation 3-1 under normal depth flow conditions. From Table 3-7, the appropriate value for the loss coefficient is K=0.15. Thus,

$$H_L = 0.15 \frac{3.63^2}{2 * 32.2} = 0.03 ft$$

Determine Structure Losses Due to the Headwall

Equation 3-25 may be used to determine the loss due to the cleanout:

$$H_L = K_{OUT} \frac{v_1^2}{2g}$$

In this case, the outlet velocity can be assumed to be equal to the velocity within the pipe, and the outlet loss coefficient is K_{OUT}=1.0.

$$H_L = 1.0 \frac{3.63^2}{2 * 32.2} = 0.21 ft$$

Determining the HGL

Applying the Energy Equation, the energy grade line elevation at the cleanout upstream (EGL_{i+1}) is the summation of all losses, water depth, datum elevation, and velocity head. The EGL elevation just before the outfall (EGL_i) is simply the sum of water depth, datum elevation and velocity head.

$$EGL_{i+1} = y_{i+1} + z_i + \frac{v_i^2}{2g} + \sum H_L$$

$$EGL_{i+1} = 1.1 + 100 + \frac{3.63^2}{2 * 32.2} + (1.00 + 0.03 + 0.21) = 102.54 ft \; ft$$

$$EGL_i = y_i + z_i + \frac{v_i^2}{2g} = 1.1 + 100 + \frac{3.63^2}{2 * 32.2} = 101.30 ft$$

The HGL elevations are taken as the difference of the EGL elevations and velocity head. The HGL elevation upstream at the cleanout is 102.34 ft, while the HGL elevation just before the outfall is 101.10 ft.

$$HGL_{i+1} = EGL_{i+1} - \frac{v_{i+1}^2}{2g} = 102.54 - \frac{3.63^2}{2 * 32.2} = 102.34 ft$$

$$HGL_i = EGL_i - \frac{v_i^2}{2g} = 101.30 - \frac{3.63^2}{2 * 32.2} = 101.10 ft$$

The HGL elevation at the cleanout is well within the freeboard requirements of 1 ft, since the actual freeboard is 4.66 ft.

[THIS PAGE INTENTIONALLY LEFT BLANK]

WB-2.2 PRESSURE FLOW

The goal of this example is to determine the HGL in a pipe that is flowing under pressure.

An 18-inch HDPE (Corrugated) pipe at 1 percent carries a peak 100-year discharge of 12 cfs. During the design event, the water in the downstream channel submerges the storm drain outlet. Determine the HGL in the pipe at the upstream end of the cleanout. The following sketch helps illustrate this example.

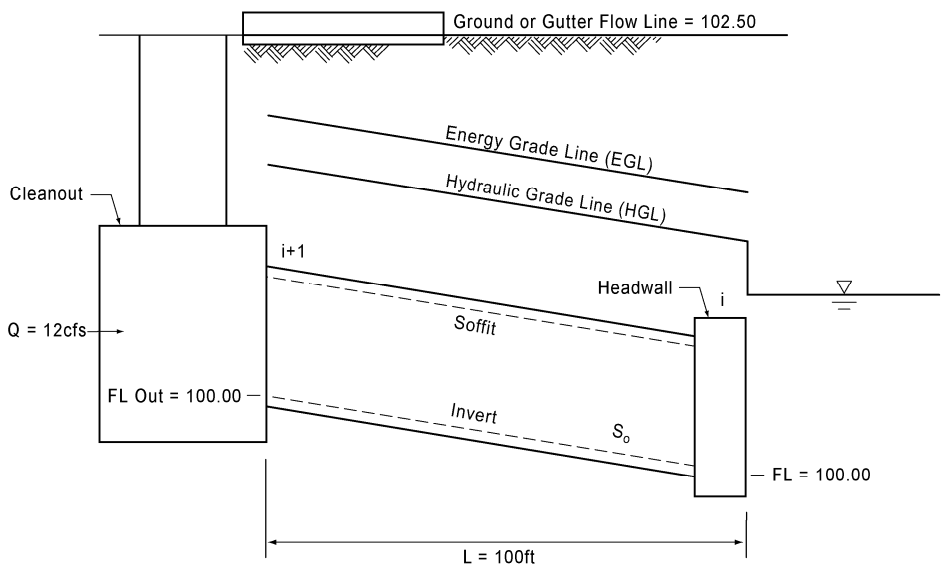

Friction Slope

Because the pipe flows under pressure, the longitudinal pipe slope and the friction slope are not necessarily the same. Thus, it is necessary to compute the friction slope. Equation 3-9 can be used to compute the friction slope:

$$S_f = \left(\frac{Qn}{0.46D^{8/3}}\right)^2 = \left(\frac{12 * 0.024}{0.46 * 1.5^{8/3}}\right)^2 = 0.045$$

Determine Losses Due to Friction

Equation 3-8 can then be used to compute the headloss due to friction in the pipe:

$$H_f = S_f L = .045 * 100 = 4.50ft$$

Determine Losses Due to the Cleanout

Equation 3-18 may be used to determine the loss due to the cleanout:

$$H_L = K\frac{v_o^{\,2}}{2g}$$

From Table 3-7, K=0.15. Because the pipe is flowing under pressure, the velocity can be computed from the continuity equation:

$$Q = VA \;\Rightarrow\; V = \frac{Q}{A}$$

Substituting this relationship into Equation 3-18 yields:

$$H_L = K\frac{Q^2}{A^2 2g} = 0.15\frac{12.0^2}{\left(\frac{\pi}{4}1.5^2\right)^2 * 2 * 32.2} = 0.15 * 0.72 = 0.11ft$$

Determine Losses at the Outlet

Since the outlet is submerged, there will be outlet losses. According to Section 3.3.6.7 of the Manual, K_{OUT}=1.0 (i.e., the outlet loss is equal to the velocity head). From the preceding step:

$$H_L = K_{OUT}\frac{v_o^{\,2}}{2g} = 1.0 * \frac{6.79^2}{2 * 32} = 0.72ft$$

Determining the HGL

Applying the Energy Equation, the energy grade line elevation at the cleanout upstream (EGL_{i+1}) is the summation of all losses, water depth, datum elevation, and velocity head. The EGL elevation just before the outfall (EGL_i) is simply the sum of water depth, datum elevation and velocity head.

$$EGL_{i+1} = \left(y_i + z_i\right) + \frac{v_i^2}{2g} + \sum H_L$$

$$EGL_{i+1} = \left(102.50\right) + 0.72 + (4.50 + 0.11 + 0.72) = 108.55ft$$

$$EGL_i = \left(y_i + z_i\right) + \frac{v_i^2}{2g}$$

$$EGL_i = \left(102.50\right) + 0.72 = 103.22ft$$

The HGL elevations are then:

$$HGL_{i+1} = EGL_{i+1} - \frac{v_{i+1}^2}{2g} = 108.55 - 0.72 = 107.83ft$$

$$HGL_i = EGL_i - \frac{v_i^2}{2g} = 103.22 - 0.72 = 102.50 ft$$

The calculated HGL elevation at the cleanout is above the gutter flow line, and does not meet the minimum freeboard requirements. The layout of the system will need to be revised in order to achieve minimum HGL freeboard of 1 ft.

[THIS PAGE INTENTIONALLY LEFT BLANK]

DESIGN EXAMPLE WB-3:
Culvert Design

The goal of this example is to show how to determine the headwater depth associated with a culvert.

A 50-foot RCP culvert is to be installed under a road at 2.5 percent. The culvert must pass a peak discharge of 35 cfs. The maximum allowable upstream water surface elevation is 105 ft, and the tailwater elevation in the downstream channel has been calculated to be 3.0 ft. The culvert entrance and exit will be finished with headwalls and square edges. What is the minimum culvert size that will meet design requirements? The following sketch helps illustrate this example.

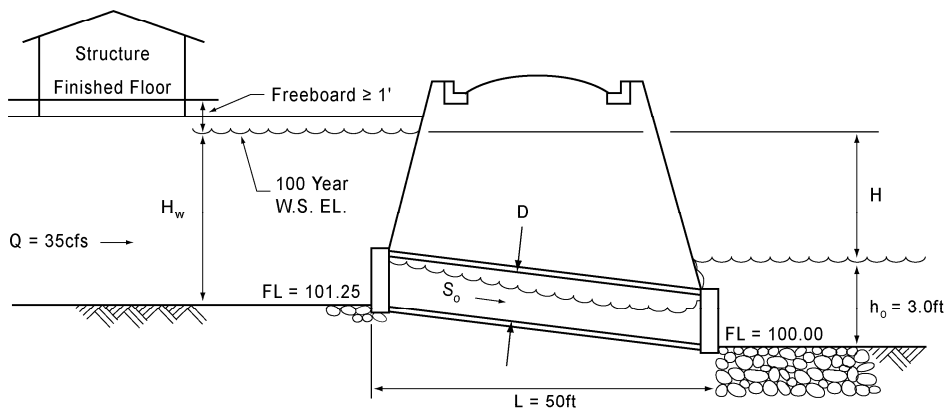

Use Inlet-Control Nomograph to Estimate Pipe Size

The nomographs provided in the Manual provide one possible method for solving this problem. Based on the information provided, Chart 1B (Appendix C) is the appropriate place to begin.

Using the nomograph, it is possible to determine the headwater depths resulting from a given pipe size. If we select a 24-inch pipe culvert, the headwater to culvert diameter ratio is H_W/D=3.0, resulting in a depth of 6 feet (see attached chart). Adding to the upstream flowline elevation, this yields a total headwater elevation of:

$$101.25 + 6.00 = 107.25 ft$$

Therefore, a 24-inch culvert is not adequate to meet the maximum headwater elevation constraint of 105 feet. Using a culvert diameter of 30 inches, the headwater to culvert diameter ratio is H_W/D =1.50, resulting in a depth of 3.75 feet and a headwater elevation of:

$$(H_W)_{inlet\ control} = 101.25 + 3.75 = 105.00ft$$

Therefore, a 30-inch culvert configuration will meet the maximum allowable water surface elevation constraint.

Check for Outlet Control

The solution above assumes inlet control. This assumption must be verified. Using Chart 5B (Appendix C), the headwater depth can be calculated assuming the culvert operates under outlet control conditions. First, line is drawn between the pipe diameter scale (30 inches) and the curved pipe length scale (50 feet, assuming an entrance loss of k_e=0.5). Next, the design flow of 35 cfs on the far-left discharge scale is connected to the turning line intersection from the first step and extrapolated to the right-hand scale to determine the head (far right scale). For the present situation, the headwater depth would be 1.5 feet above the downstream water surface elevation. This yields a headwater elevation of:

$$(H_W)_{outlet\ control} = 100.00 + 3.00 + 1.50 = 104.50ft$$

Because this is lower than the headwater elevation calculated assuming inlet control, the inlet control headwater calculation governs.

Determine Outlet Velocity

Once the pipe size is selected, the outlet velocity can be determined using Equation 3-1

$$Q = \frac{1.49}{n} AR^{2/3} S^{1/2}$$

Because we do not know the depth of flow within the culvert, solving this equation requires the use of tables or a trial and error approach. Performing such an analysis yields a normal depth of 1.31 feet and a velocity of 13.4 fps. Because of the high velocity, a riprap energy dissipater will be necessary at the exit to reduce exit velocities to non-erosive levels. See Design Example WB-7 for an example of such a calculation.

CHART 1B

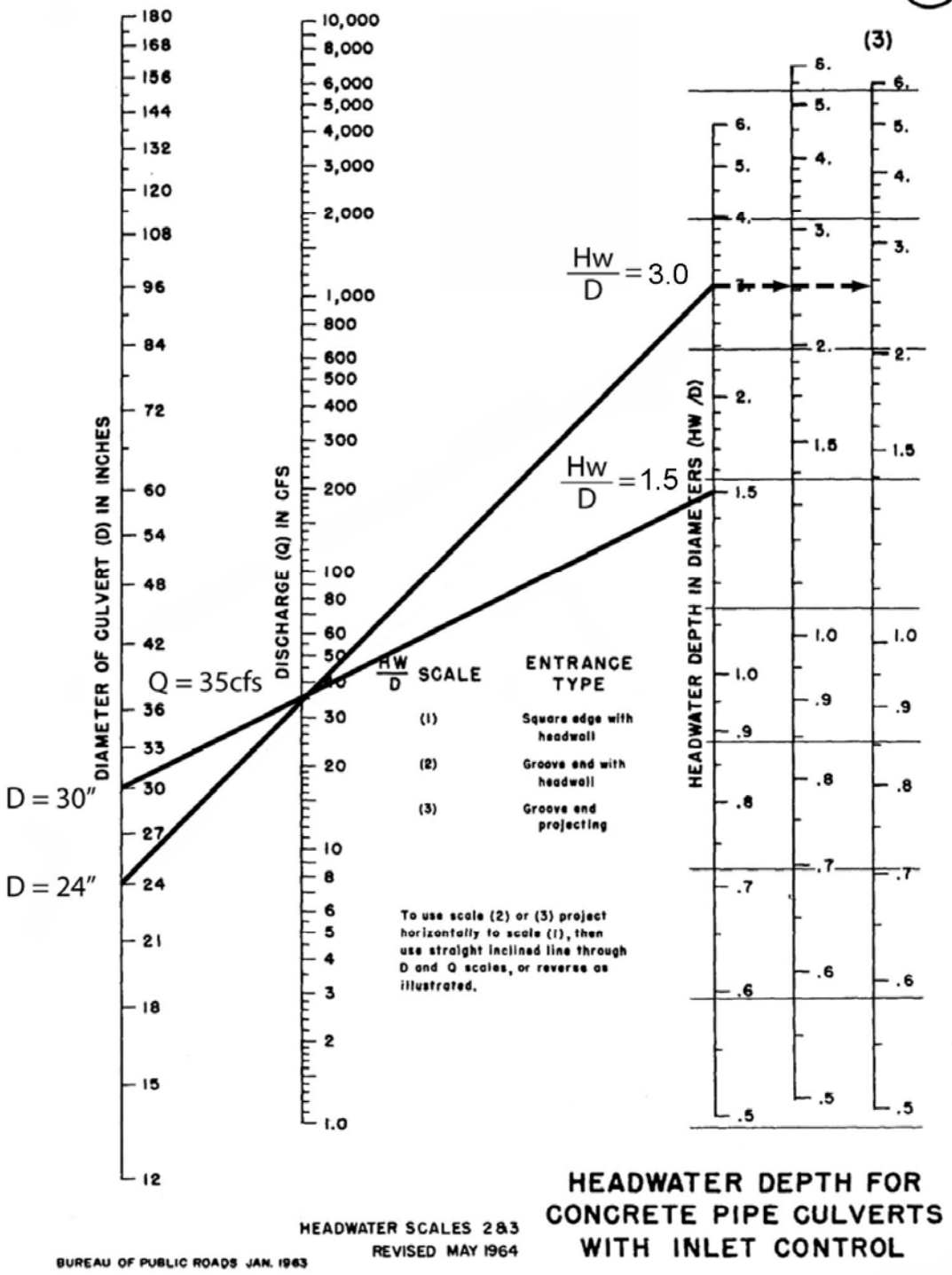
(3)
DIAMETER OF CULVERT (D) IN INCHES
DISCHARGE (Q) IN CFS
HEADWATER DEPTH IN DIAMETERS (HW/D)
Hw/D = 3.0
Hw/D = 1.5
Q = 35cfs
D = 30″
D = 24″
Hw/D SCALE
ENTRANCE TYPE
(1) Square edge with headwall
(2) Groove end with headwall
(3) Groove end projecting
To use scale (2) or (3) project horizontally to scale (1), then use straight inclined line through D and Q scales, or reverse as illustrated.
HEADWATER SCALES 2&3
REVISED MAY 1964
BUREAU OF PUBLIC ROADS JAN. 1963
HEADWATER DEPTH FOR CONCRETE PIPE CULVERTS WITH INLET CONTROL

CHART 5B

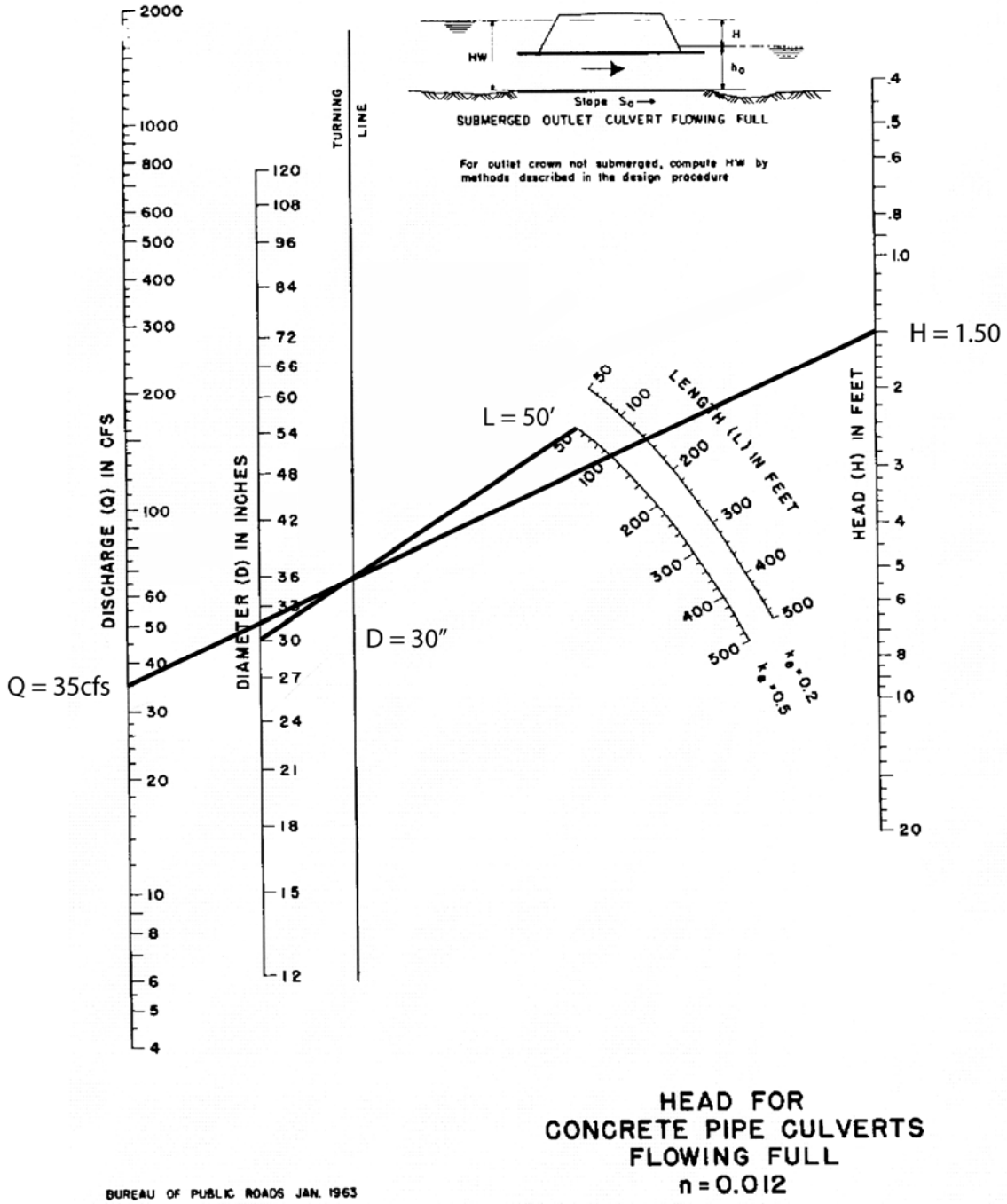

HEAD FOR
CONCRETE PIPE CULVERTS
FLOWING FULL
n = 0.012

BUREAU OF PUBLIC ROADS JAN. 1963

DESIGN EXAMPLE WB-4:
Open Channel Design

WB-4.1 WETLAND-BOTTOM CHANNEL

The goal of this example is to show how to verify the design of a wetland bottom channel.

A wetland-bottom channel with an 8-foot base width, 3.5-ft channel depth, 3H:1V sideslopes, and a longitudinal slope of S=0.005 is to convey a 100-year design flow of 30 cfs. Will the channel require erosion protection during the interim condition? Is the depth of the channel adequate? The following sketch helps illustrate this example.

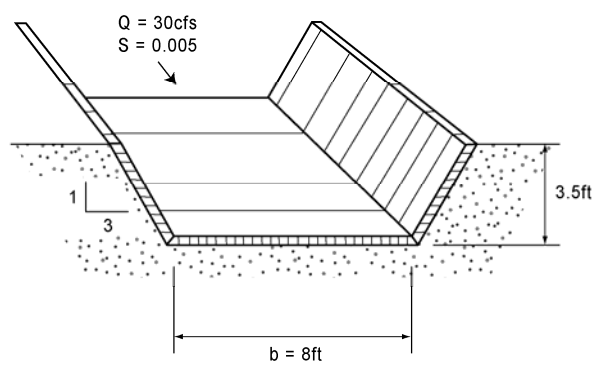

Interim Condition

The channel must convey peak 100-year flows (30 cfs) before plants achieve maturity without suffering erosion damage due to high velocities. According to the Manual, for a natural channel, (during interim conditions) the Manning roughness coefficient will be n=0.023 (Appendix A, Table A-4) and the Froude Number should be less than F_R=0.7.

The depth of flow in the channel can be computed using Equation 5-8:

$$Q = \frac{1.49}{n} A R^{2/3} \sqrt{S}$$

For an 8-ft base width and given channel parameters solve for by trial and error:

Flow Depth	Area	Wet Perimeter	Radius	Top Width	Hydraulic Depth	Section Factor	Flow	Velocity	Froude
y	A	P	R	T	D	$AR^{2/3}$	Q	v	F_R
(ft)	(sq ft)	(ft)	(ft)	(ft)	(ft)		(cfs)	(ft/s)	
1.00	11.00	14.32	0.77	14.00	0.79	9.22	42.25	3.84	0.764
0.80	8.32	13.06	0.64	12.80	0.65	6.16	28.22	3.39	0.741
0.828	8.68	13.24	0.66	12.97	0.67	6.55	30.00	3.46	0.745

Because F_R>0.7 this channel section does not meet the requirements during the interim stage.

If the channel bottom width is increased to 12 feet, by trial and error:

Flow Depth	Area	Wet Perimeter	Hydraulic Radius	Top Width	Hydraulic Depth	Section Factor	Flow	Velocity	Froude
y	A	P	R	T	D	$AR^{2/3}$	Q	v	F_R
(ft)	(sq ft)	(ft)	(ft)	(ft)	(ft)		(cfs)	(ft/s)	
0.60	8.28	15.79	0.52	15.60	0.53	5.38	24.66	2.98	0.720
0.70	9.87	16.43	0.60	16.20	0.61	7.03	32.19	3.26	0.736
0.67	9.39	16.24	0.58	16.02	0.59	6.51	29.84	3.18	0.732
0.672	9.42	16.25	0.58	16.03	0.59	6.55	30.00	3.18	0.732

Because F_R>0.7 this revised channel section doesn't meet the requirements during the interim stage.

If the channel bottom width is further increased to 24 feet, by trial and error:

Flow Depth	Area	Wet Perimeter	Hydraulic Radius	Top Width	Hydraulic Depth	Section Factor	Flow	Velocity	Froude
y	A	P	R	T	D	$AR^{2/3}$	Q	v	Fr
(ft)	(sq ft)	(ft)	(ft)	(ft)	(ft)		(cfs)	(ft/s)	
0.40	10.08	26.53	0.38	26.40	0.38	5.29	24.22	2.40	0.685
0.45	11.41	26.85	0.42	26.70	0.43	6.45	29.54	2.59	0.698
0.454	11.52	26.87	0.43	26.73	0.43	6.55	30.00	2.60	0.699

Therefore, the channel needs to be 24 feet wide at the bottom to meet the design criteria during interim condition. Because this represents a three-fold increase over the proposed width, alternative design solutions such as temporary erosion control, temporary grade control structures, or decreasing the channel slope should be considered.

Ultimate Conditions

Per Section 5.6.2 of the Manual, the Manning's roughness coefficient for use during ultimate conditions calculations is n=0.150. Assuming we have elected to use an 8-foot wide channel, the depth of flow in the channel can be computed using Equation 5-8:

$$Q = \frac{1.49}{n} AR^{2/3}\sqrt{S}$$

By trial and error:

Flow Depth	Area	Wet Perimeter	Hydraulic Radius	Top Width	Hydraulic Depth	Section Factor	Flow	Velocity	Froude
y	A	P	R	T	D	$AR^{2/3}$	Q	v	Fr
(ft)	(sq ft)	(ft)	(ft)	(ft)	(ft)		(cfs)	(ft/s)	
2.00	28.00	20.65	1.36	20.00	1.40	34.30	24.09	0.86	0.128
2.50	38.75	23.81	1.63	23.00	1.68	53.61	37.66	0.97	0.132
2.20	32.12	21.91	1.47	21.20	1.52	41.45	29.11	0.91	0.130
2.233	32.83	22.12	1.48	21.40	1.53	42.71	30.00	0.91	0.130

Freeboard

Because peak flows in the channel are subcritical, Equation 5-1 can be used to determine the freeboard requirements.

$$h_{fr} = 0.5 + \frac{v^2}{2g} + \frac{Cv^2T}{rg} + \Delta y$$

Since the channel is straight and the effects of waves are being ignored, the last two terms drop out. Therefore,

$$h_{fr} = 0.5 + \frac{v^2}{2g} = 0.5 + \frac{(0.91)^2}{2g} = 0.51$$

Because the calculated freeboard is less than the minimum freeboard of 1.0 ft, the minimum freeboard governs. Thus, the minimum channel depth is:

$$D_{min} = y + h_{fr} = 2.23 + 1.0 = 3.23ft$$

Therefore, the current channel depth of 3.5 feet meets the design standard.

[THIS PAGE INTENTIONALLY LEFT BLANK]

WB-4.2 RIPRAP-LINED CHANNEL

The goal of this example is to show how to verify the design of a riprap-lined channel.

A riprap-lined channel with 8-foot base width, 3H:1V sideslopes, and longitudinal slope of S=0.020 is to convey a 100-year design flow of 150 cfs. What is the riprap gradation and thickness required? The following figure helps illustrate this example.

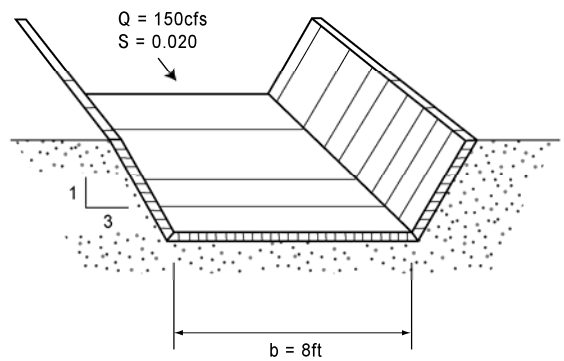

Channel Bed

The process for designing a riprap-lined channel is an iterative procedure: select a riprap size, check it against actual conditions, and repeat as necessary.

Assume No. 2 Backing riprap. From Table 5-2

Median Stone Diameter: d_{50} = 0.7 ft

Manning Roughness Coefficient: n =0.037 fps

The depth of flow and flow velocity can be found using Equation 5-8:

$$Q = \frac{1.49}{n} A R^{2/3} \sqrt{S}$$

Flow Depth: y = 1.75 ft

Flow Velocity: v = 6.5 fps

Based on Table 5-4, the maximum design velocity for a rock gradation of No. 2 Backing is 6-10 fps. Because 6.5 fps<10 fps, No. 2 Backing riprap will be adequate for the channel bottom.

Channel Banks

Because of variations in the shear stress distribution across the channel cross-section, impinging flow considerations, and riprap stability considerations, channel embankments may require a different riprap gradation than the channel base. The weight of riprap required to protect the channel banks can be calculated using Equation 5-6:

$$W_{\min} = \frac{0.00002 V_A^6 SG}{(SG-1)^3 \sin^3(\beta-\alpha)}$$

where …

SG	=	2.65
K	=	0.67 (channel banks are parallel to flow)
V_A	=	KV_M = 0.67*6.5 = 4.4 fps
β	=	70 degrees
α	=	tan(1/3)=18.42 degrees (3H:1V side slope)

$$W_{\min} = \frac{0.00002 * (4.4)^6 * 2.65}{(2.65-1)^3 * \sin^3(70-18.42)} = 0.2 lbs$$

Because 0.2 lbs<25 lbs, No. 2 Backing riprap will be adequate for the channel banks.

Riprap Thickness

Per Table 5-5, the minimum thickness for No. 2 Backing riprap is 1.25 feet.

Bedding Requirements

The placement and fabric requirements are described in Table 5-5 and Table 5-6, respectively. Placement Method A and Fabric Type "A" may be used for the riprap installation.

Toe Protection

Equation 5-7 can be used to calculate the probable maximum depth of scour:

$$d_S = 6.5 d_{50}^{-0.11} = 6.5 * (0.7)^{-0.11} = 6.76 ft$$

Therefore, assuming no local scour or long-term channel degradation, the toe protection should extend at least 6.76 feet below the channel bed.

DESIGN EXAMPLE WB-5:
Detention Basin Design

The goal of this example is to show how to determine the effects of a detention basin on peak 100-year discharges. In this example, peak 100-year hydrologic information is provided.

A 400-foot by 100-foot detention basin with 3H:1V side slopes is to be used to attenuate peak discharges from a site. The bottom of the basin slopes towards the outlet at 1.0 percent. The outlet structure is a 6.5-foot long rectangular weir with an invert flush with the bottom of the basin. The peak 100-year year discharge into the basin is 100 cfs, with a 15-minute time of concentration, 40-acre watershed, composite runoff coefficient is 0.65, and the peak 6-hour rainfall is 3 inches. What is the peak 100-year attenuated discharge from the basin? If site constraints limit the basin to a maximum of 5 feet deep, what is the minimum dimensions for a rectangular weir-type emergency spillway? The following sketch helps illustrate this example.

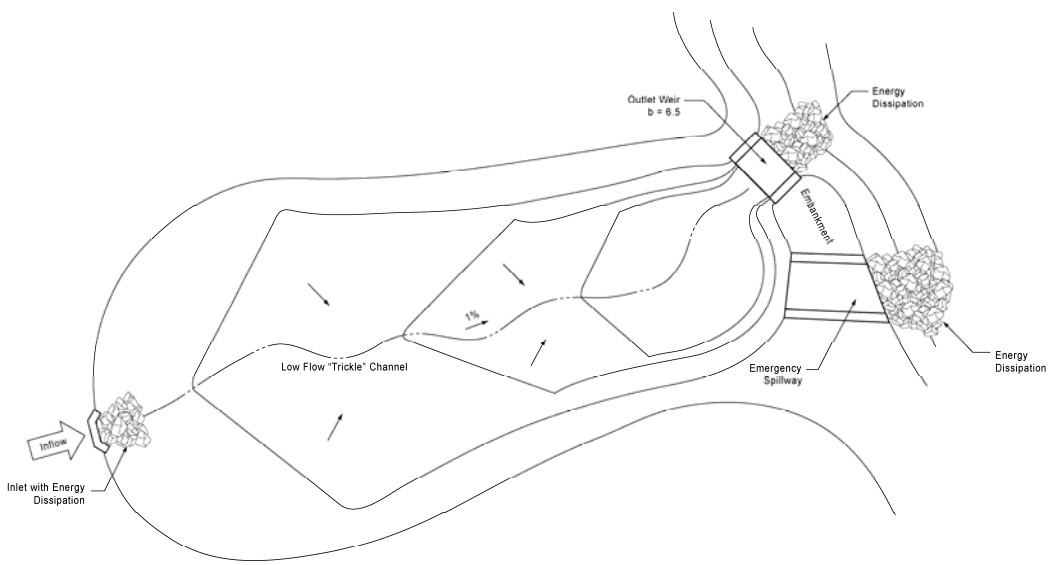

Inflow Hydrograph

Computation of the inflow hydrograph for each storm event desired is required. The use of triangular hydrographs is no longer supported; the use of methods described in the current version of the *San Diego County Hydrology Manual* shall be followed to produce an inflow hydrograph.

Based on the watershed information provided, and using the Rational Method Design Storm Hydrograph Method software distributed by the County of San Diego the following represents the inflow hydrograph:

Inflow Hydrograph

Time (min)	Inflow (cfs)
0	0.0
15	4.7
30	4.8
45	5.1
60	5.3
75	5.7
90	5.9
105	6.4
120	6.7
135	7.4
150	7.9
165	9.0
180	9.8
195	12.0
210	13.6
225	20.0
240	29.4
255	100.0
270	16.1
285	10.8
300	8.4
315	7.0
330	6.1
345	5.5
360	5.0
375	0.0

Establish Outflow Rating Curve

In this example, there is only one outlet structure, an overflow spillway that can be modeled as a weir. Therefore, the outlet-rating curve is straightforward. The elevation-discharge relationship for the weir can be calculated using Equation 6-10:

$$Q = C_{BCW} L H^{3/2}$$

We create a rating curve for the weir by calculating the discharge, using a broad-crested weir coefficient of C_{BCW}=3.0 and weir length of L=6.5 feet and varying the depth of flow through the weir.

Outlet Rating Curve

Depth (ft)	Discharge (cfs)
0.25	2.25
0.50	6.36
0.75	11.69
1.00	18.00
1.25	25.16
1.50	33.07

Outlet Rating Curve (continued)

1.75	41.67
2.00	50.91
2.25	60.75
2.50	71.15
2.75	82.09
3.00	93.53

Stage- Storage Relationship

The stage-storage relationship can be determined using Equation 6-1:

$$V_{1,2} = \frac{\left(A_1 + A_2\right)}{2}\left(h_2 - h_1\right)$$

This equation yields the following relationship:

Stage-Storage Relationship

Stage (feet)	Storage (ft^3)
0.00	0
0.25	14,805
0.50	29,926
0.75	45,576
1.00	61,966
1.25	79,312
1.50	97,830
1.75	117,735
2.00	139,246
2.25	162,582
2.50	187,963
2.75	215,610
3.00	245,746

Storage Indication Method

Now that an inflow hydrograph and outlet-rating curve have been established, the Storage Indication Method can be used to determine the routing characteristics of the detention basin. Equation 6-4 summarizes this method:

$$\left(\frac{2S_{n+1}}{\Delta t} + O_{n+1}\right) = \left(\frac{2S_n}{\Delta t} - O_n\right) + \left(I_n + I_{n+1}\right)$$

Typically, computer programs are used to perform the required calculations. However, hand calculations are possible. The following table shows a portion of the Storage Indication Method results:

Storage Indication Method

Time	Inflow I_n	I_n+I_{n+1}	Q_n	S_n	$2S_n/dt-O_n$	$2S_{n+1}/dt+O_{n+1}$	WSEL
0	0.00	4.70	0.00	0.00	0.00	4.70	0.23
15	4.70	9.50	2.09	1,172	0.51	10.01	0.35
30	4.80	9.90	3.88	2,758	2.25	12.15	0.39
45	5.10	10.40	4.58	3,403	2.98	13.38	0.42
60	5.30	11.00	4.99	3,775	3.40	14.40	0.44
75	5.70	11.60	5.33	4,083	3.75	15.35	0.46
90	5.90	12.30	5.64	4,370	4.07	16.37	0.48
105	6.40	13.10	5.97	4,679	4.43	17.53	0.50
120	6.70	14.10	6.35	5,027	4.82	18.92	0.52
135	7.40	15.30	6.74	5,480	5.44	20.74	0.54
150	7.90	16.90	7.24	6,074	6.26	23.16	0.57
165	9.00	18.80	7.91	6,862	7.34	26.14	0.61
180	9.80	21.80	8.73	7,835	8.68	30.48	0.67
195	12.00	25.60	9.93	9,249	10.63	36.23	0.74
210	13.60	33.60	11.51	11,121	13.20	46.80	0.85
225	20.00	49.40	14.11	14,712	18.59	67.99	1.04
240	29.40	129.40	19.25	21,929	29.48	158.88	1.78
255	**100.00**	116.10	42.61	52,321	73.66	189.76	**2.01**
270	16.10	26.90	**51.24**	**62,334**	87.28	114.18	1.42
285	10.80	19.20	30.69	37,570	52.80	72.00	1.08
300	8.40	15.40	20.22	23,300	31.56	46.96	0.85
315	7.00	13.10	14.15	14,766	18.67	31.77	0.68

This analysis indicates that the peak 100-year flow is attenuated from 100 cfs to 51.2 cfs. The maximum storage volume used is 62,334 ft^3, with a maximum water surface elevation of 2.01 feet. Continuing the computations would demonstrate that the basin will empty within 72 hours.

Emergency Spillway

The emergency spillway must be able to convey the unattenuated peak flow of 100 cfs, ignoring the storage inside of the basin. The invert of the emergency spillway is placed just above the maximum water surface elevation. The maximum spillway depth is found by taking the difference between the top of embankment (5.0 feet) and the maximum water surface elevation (2.0 ft). Allowing for 1.0 foot of required freeboard, the spillway flow cannot be more than 2 ft deep. Therefore, the minimum length of the emergency spillway can be found using the broad-crested weir equation:

$$L = \frac{Q}{C_{BCW} H^{3/2}} = \frac{100}{3.0 * 2^{3/2}} = 11.76 ft$$

DESIGN EXAMPLE WB-6:
Riprap Apron at Storm Drain Outfall

The goal of this example is to show how to determine the appropriate size of riprap for use with a specific discharge velocity. In this example, peak 100-year hydrologic information is provided.

An 18-inch RCP pipe discharges 16.7 cfs through a headwall. The peak discharge exit velocity is 10.5 fps. What size, length, and thickness of riprap should be used as an energy dissipator? The following sketch helps illustrate this example.

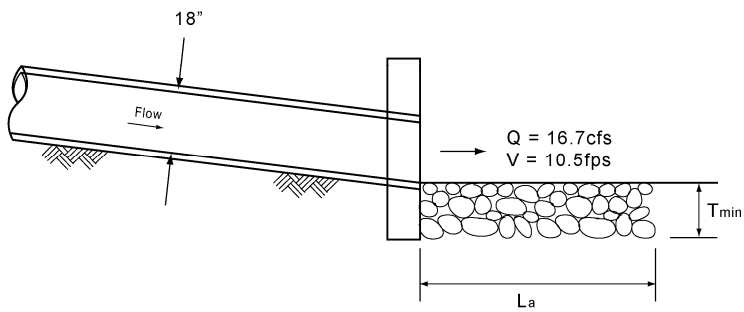

Determine Riprap Size

Based on Table 7-1, for a flow velocity of 10.5 fps:

Median Stone Diameter: d_{50} = 1.8 ft (¼-ton Riprap)

Determine Length of Riprap Apron

Once the riprap size is determined, the apron length can be determined using Equation 7-1:

$$L_a = 4 * D_O = 4 * 1.5 = 6.0 ft$$

An apron length of 6.0 feet is shorter than the minimum length defined by regional standard drawings. Therefore, specify the minimum apron length of 10 feet.

Determine Thickness of Riprap Apron

Per the standard drawing and Section 7.3.1 of the Manual, the minimum riprap apron thickness is 1.5 times the median stone diameter d_{50}.

$T_{min} = 1.5 d_{50} = 1.5 * 1.8 = 2.7 ft$ Flow velocities exiting the riprap apron must be checked to ensure that they are not erosive downstream.

[THIS PAGE INTENTIONALLY LEFT BLANK]