Appendix

K

Guidance on Green Infrastructure

February 26, 2016

This page was left intentionally blank.

Appendix K Guidance on Green Infrastructure

K.1 Guidance on Green Infrastructure

K.2 Green Streets Guidelines

K.3 Green Streets Design Criteria

K.4 Green Streets Design Standard Drawings

K.5 Green Streets Maintenance Schedule

K.6 Green Streets Specifications

This page was left intentionally blank.

K.1 Guidance on Green Infrastructure

This page was left intentionally blank.

County of San Diego Guidance on Green Infrastructure

February 2016

This page is intentionally left blank

COUNTY OF SAN DIEGO GUIDANCE ON GREEN INFRASTRUCTURE

Green Infrastructure is an approach to stormwater and flood management that protects, restores, and mimics the natural water cycle using vegetation, mulch, soils, and natural processes while creating healthier environments. At the County scale, green infrastructure refers to the network of natural features that provides habitat, flood protection, cleaner air, and cleaner water. At the scale of a neighborhood or site, green infrastructure refers to stormwater and flood management systems that mimic nature by soaking up and storing water.

Roadways present many opportunities for coordinated Green Infrastructure use. A Green Street uses a natural system approach to reduce stormwater flow, improve water quality, reduce urban heating, enhance pedestrian safety, reduce carbon footprints, and beautify neighborhoods. Green Streets are a component of Green Infrastructure, integrating strategies into roads and right-of-ways.

Green Streets Guidelines are an outreach tool and are also intended to serve as a companion to the rest of the Green Streets publications. They include an introduction, strategies, procedures and design examples for implementing Green Streets projects. The strategies include tree wells, rain gardens, rock gardens, and permeable pavement.

Green Streets Design Criteria lay out general definitions, general policy, and landscape design criteria for Green Infrastructure strategies in the right-of-way.

Green Streets Supplement to County Design Standard Drawings includes construction details which may be referenced in improvement plans similar to current County Design standard drawings.

Green Streets Maintenance Schedules include a list with maintenance tasks, frequency, and time of year for initial, routine, and as-needed maintenance of each Green Infrastructure strategy.

Green Streets Specifications include detailed construction material and installation requirements for Green Infrastructure strategies including aggregates, geosynthetics, underdrains, permeable pavement, engineered soil media, mulch, overflow risers, check dams, and tree grates.

This page is intentionally left blank

K.2 Green Streets Guidelines

This page was left intentionally blank.

Green Streets Guidelines

A Guide to Green Street Implementation in the County of San Diego

January 2016

This page was intentionally left blank

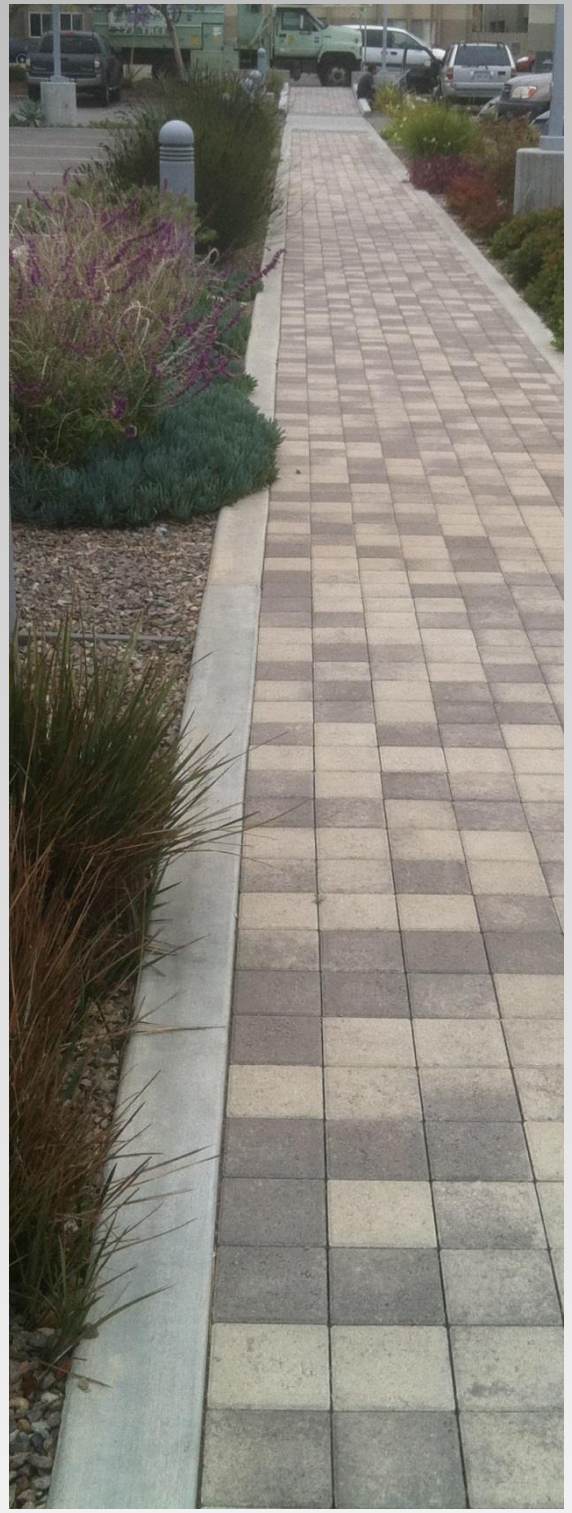

WHAT IS A GREEN STREET?

Pavement on roadways can contribute to excess stormwater runoff and increased levels of pollutants in the County's waterways. Green infrastructure reduces stormwater runoff and improves water quality. The Green Streets program incorporates a wide variety of Green Infrastructure design elements including, but not limited to: tree wells, rain gardens, rock gardens and permeable pavement. The use of Green Streets offers the capability of transforming a significant stormwater and pollutant source into an innovative treatment system.

Additionally, the State of California is in the midst of a severe drought, with water years of 2012-14 recording the driest three consecutive years in the state's history, as well as setting new records for statewide average temperatures. On April 1st, 2015 Governor Brown signed executive order B-29-15 setting the first mandatory statewide water restrictions. This order prohibits ornamental turf on public street medians, and requires a reduction in potable water use for irrigation. The Green Streets program promotes water conservation through the use of low water use and drought tolerant plants (xeriscape) and improving groundwater supplies through infiltration.

Green infrastructure, unlike traditional "gray" infrastructure approaches to stormwater management, provides multiple benefits to communities. Planting more trees and landscaping in public spaces cleans the air, cools the land, provides more habitat for wildlife, adds green maintenance jobs, increases property values and promotes a better, healthier quality of life for San Diego County residents and visitors.

Under the Municipal Separate Storm Sewer System (MS4) Permit for San Diego Region (Permit [Order No. R9-2013-0001]), the County may make Priority Development Project (PDP) Exemptions for projects redeveloping or retrofitting existing paved roads, streets, and alleys as "EPA Green Streets." This is accomplished by meeting the criteria set forth in section 1.4.3 of the County of San Diego BMP Design Manual and based in part on the EPA publication "Green Streets: Municipal Handbook, Managing Wet Weather with Green Infrastructure."

This guide is to be used along with the County's BMP Design Manual for meeting stormwater requirements within the County's public right-of-way. These Green Streets measures, when implemented, will ensure the County remains a green community for many years to come.

Table of Contents

Chapter 1 – Introduction to Green Streets.....1

1.1 Introduction.....1
1.2 The Natural and Developed Environment.....1
1.3 Greening the Streets.....3
1.4 The County Environment.....4
1.5 County Right of Way.....5

Chapter 2 – Green Streets Strategies.....6

2.1 Introduction.....6
2.2 Tree Wells.....7
2.3 Types of Rain Gardens.....10
2.4 Planting & Irrigation of Rain Gardens, Tree Wells, and Other Areas.....25
2.5 Types of Rock Gardens.....26
2.6 Types of Permeable Pavement.....29

Chapter 3 – Procedures & Design Examples.....34

3.1 Introduction.....34
3.2 Design Procedure.....36
3.3 Medians.....37
3.4 Intersections.....38
3.5 Traveled Way, Bike Lane, and Shoulder.....40
3.6 Parkway.....42
3.7 Putting it All Together.....47

Chapter 4 – Implementing Green Streets Projects.....48

4.1 Design and Construction.....48
4.2 Maintenance.....49

References.....50

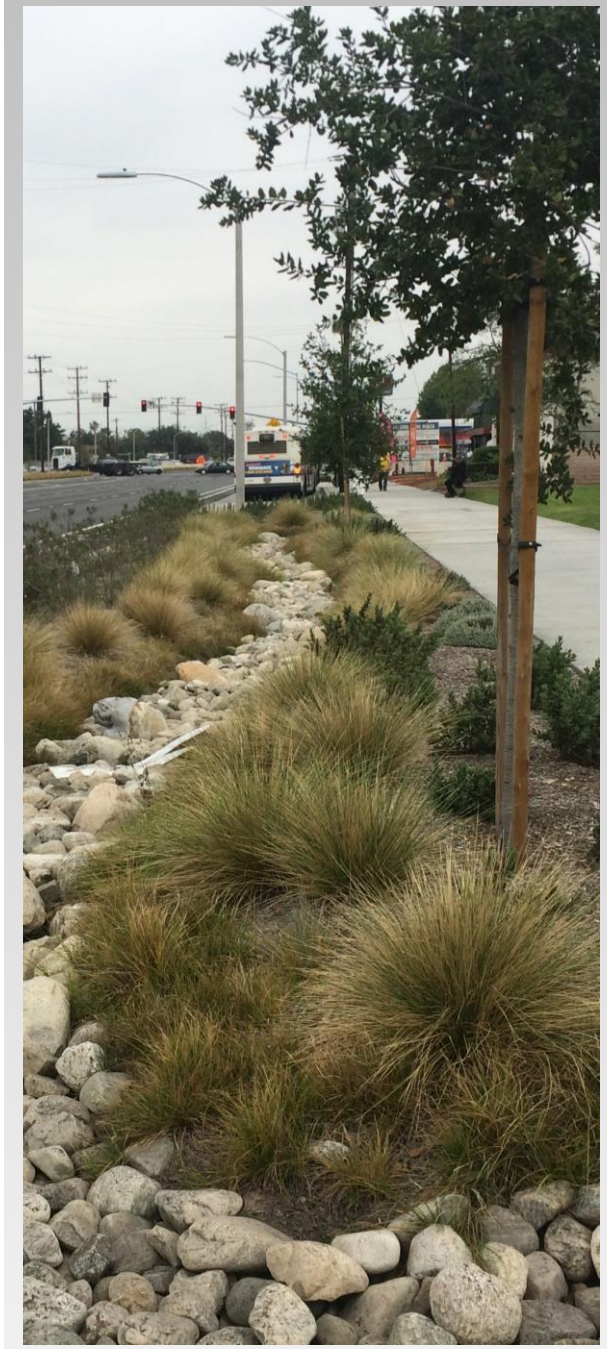

CHAPTER 1 Introduction to Green Streets

1.1 INTRODUCTION

These guidelines have been prepared to assist in the design and construction of projects that retrofit or redevelop existing paved streets and roads. These Guidelines and Standards have been developed in accordance with the United States Environmental Protection Agency Green Streets Guidance "Green Streets: Municipal Handbook, Managing Wet Weather with Green Infrastructure."

These Guidelines may also be used to assist in the design and construction of new or retrofit paved sidewalks, bicycle lanes, or trails.

The functional goals of these guidelines are to:

- Provide source control of stormwater;
- Limit stormwater transport and pollutant conveyance to the collection system;
- Restore predevelopment hydrology to the extent possible by slowing the runoff down and allowing for infiltration; and
- Provide environmentally enhanced roads.

A review of existing County policies has been performed and included in the accompanying Green Streets Standards document that includes an addendum to the Public Road Standards, as well as Green Streets Standard Drawings and Specifications.

Green Streets configurations and locations presented in this guideline are schematic/conceptual in nature. The configurations (or locations) could be modified as long as the design and construction details are in conformance with the Green Streets technical documents (i.e. – Green Streets Supplement to Public Road Standards, Standard Drawings, Specifications, Plant List, and Maintenance Schedule).

1.2 The Natural and Developed Environment

Natural Areas

In areas such as meadows, thickets, woodlands, and parks, rain can soak into the ground and be used by plants. Trees and shrubs intercept rainfall and it slowly trickles down to the ground where it is absorbed by mulch and humic soil.
Shaded areas are cooler, moister and provide wildlife habitat. Very little rainwater runs off the ground.

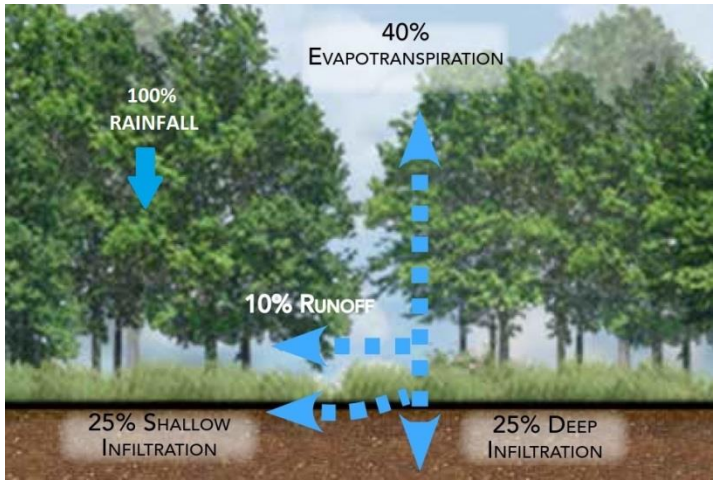

Natural Area Diagram
(Source: DDOT, 2014)

Urban Areas

In urban areas, building rooftops, streets, alleys, sidewalks, and other paved surfaces are smooth and mostly impervious. Very little rain has a chance to soak into the ground. These paved urban areas are hotter and offer very little wildlife habitat. Most of the rain that falls in the urban areas quickly runs off impervious surfaces picking up pollutants and carrying them into storm drains. These flows quickly combine to create flash floods that degrade downstream waterways.

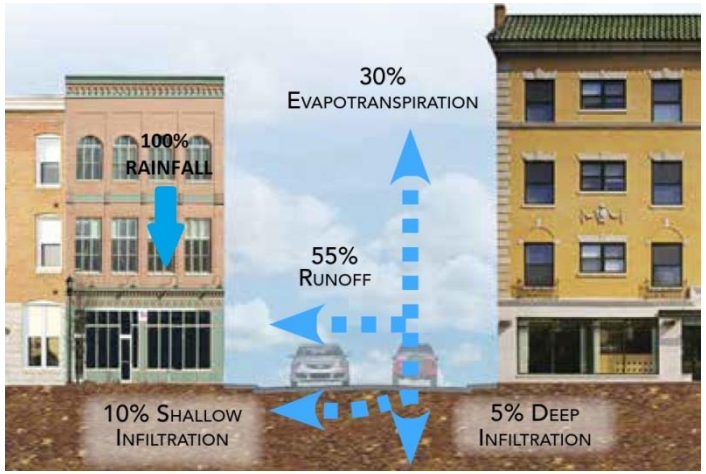

Urban Area Diagram
(Source: DDOT, 2014)

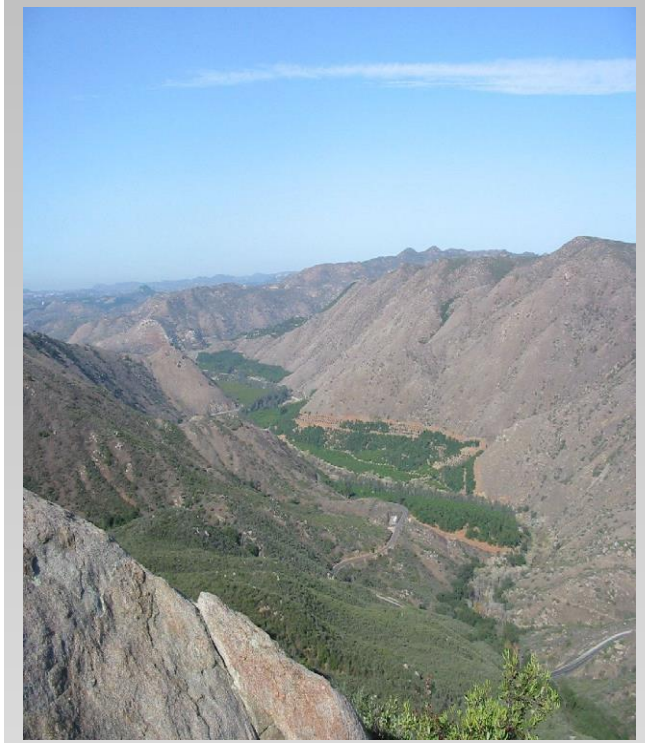

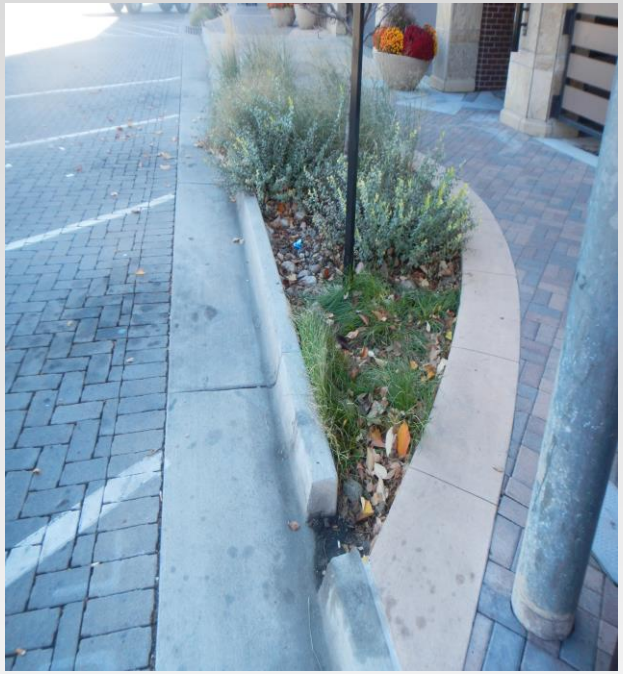

Stormwater Capture

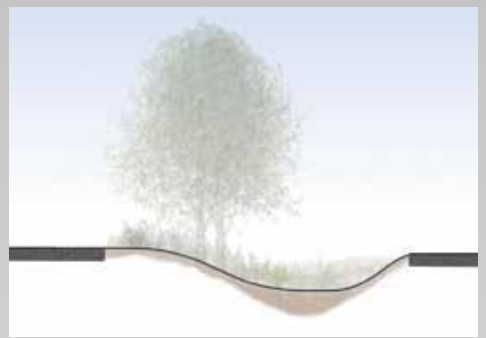

Runoff from impervious surfacing

Store

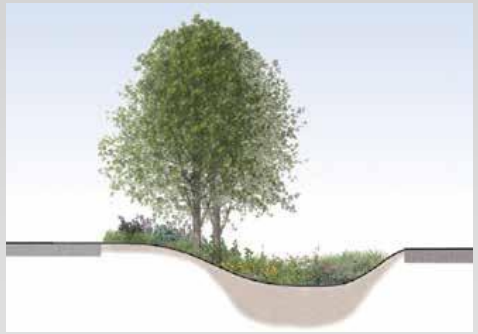

Store and retain captured runoff

Infiltrate/Evapotranspire

Water is infiltrated into the ground, evapotranspired by plants or drained

(Source: DDOT, 2014)

1.3 Greening The Streets

Green Streets, which includes Green Infrastructure (GI), incorporates elements found in natural areas into the County road right of way. GI is the living network that connects impervious areas to landscape areas, natural areas, and waterways. GI captures rainfall; cools buildings and pavement; and creates natural pathways for wildlife. GI includes Low Impact Development (LID) techniques, which mimic nature to capture and treat stormwater as close to the source as possible. When implemented, GI creates living green streets that capture, store, and infiltrate stormwater to treat it as a resource and improve the County environment.

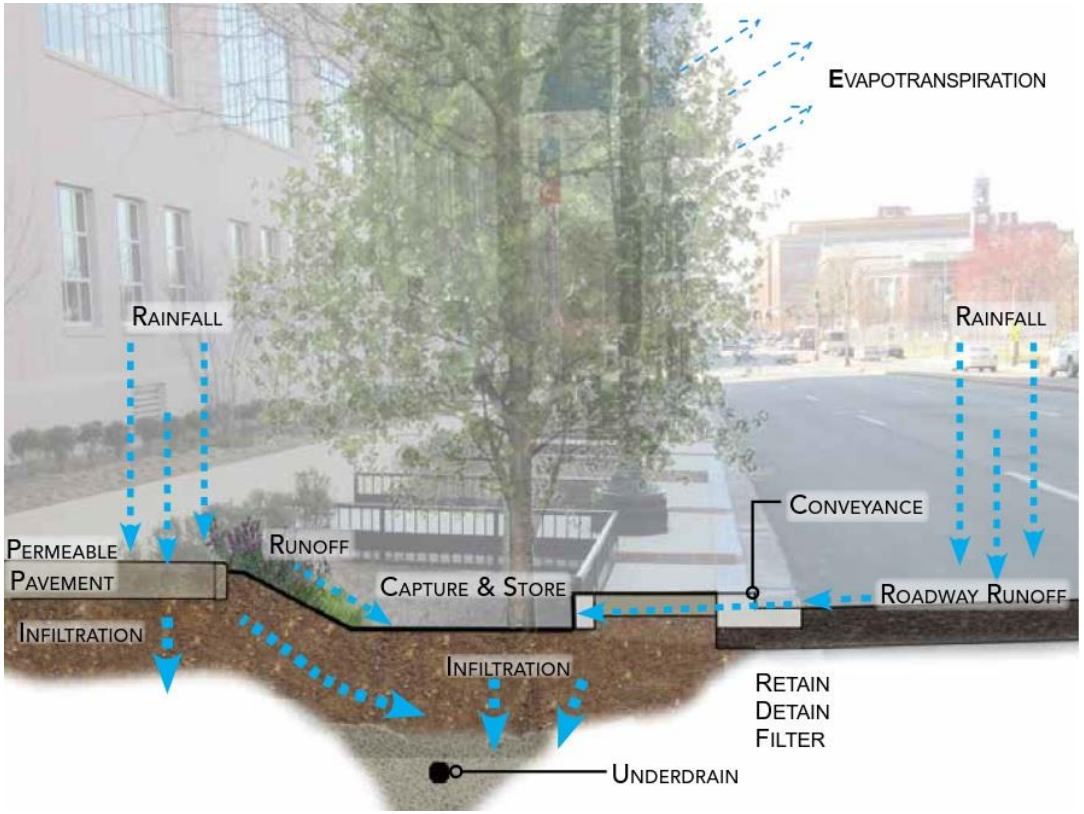

Green Streets Stormwater Diagram
(Source: DDOT, 2014)

1.4 The County Environment

The County of San Diego is a unique environment made up of natural, rural, and urban areas. When rain falls in the County and becomes stormwater runoff, it flows through eleven major watersheds. Stormwater carries the pollutants, trash, and warmer temperatures it collects from roads, buildings, and other impervious surfaces and delivers them into our rivers, streams, bays, lagoons, and ocean. Urbanization and other land use changes in the County can modify the natural watershed hydrologic processes and stormwater runoff characteristics resulting in increased stormwater runoff and erosion.

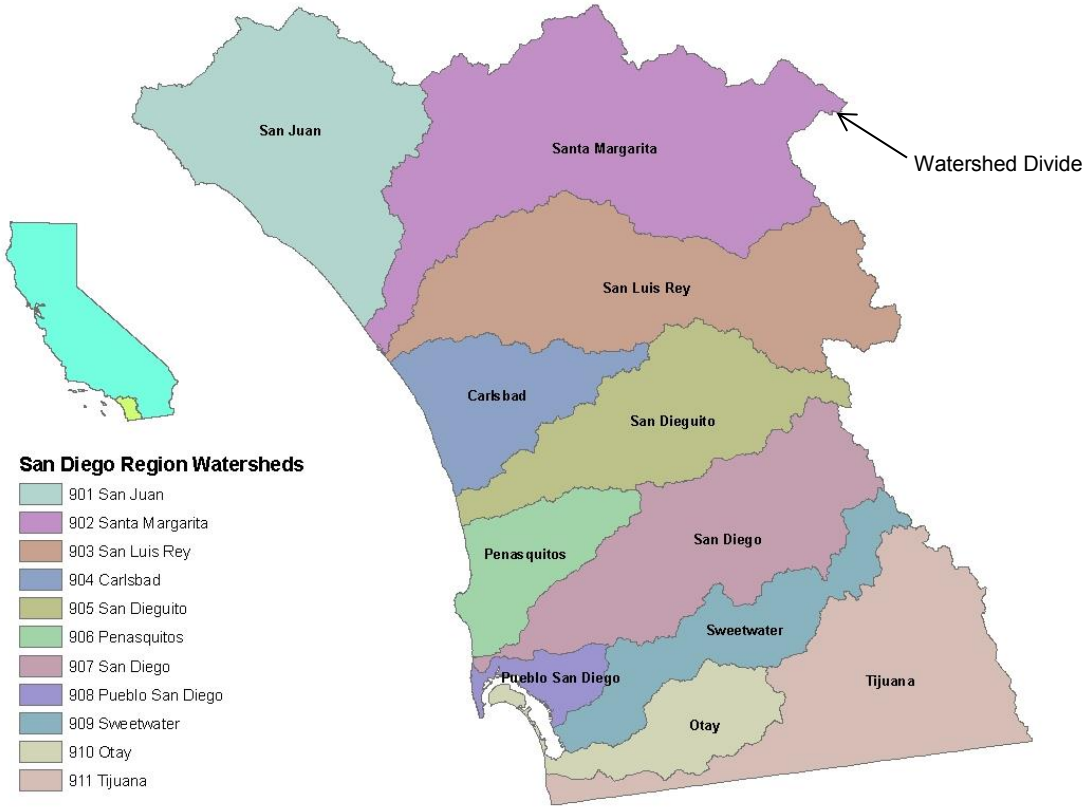

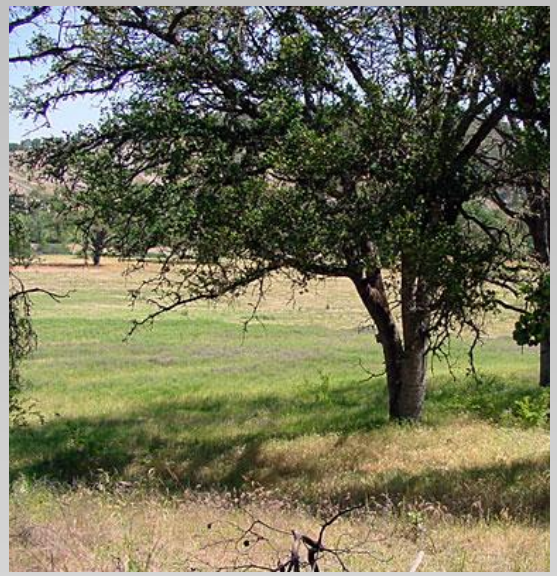

(Source: DDOT, 2014)

1.5 County Right-of-Way

Land within the road right-of-way (ROW) presents a significant opportunity to reduce runoff and improve the urban environment through Green Streets. This manual introduces techniques to install green infrastructure in the median, street, bike lane, shoulder, parkway, and slope and drainage easements. This guide and the "Green Streets Standards," which includes supplements to the Public Road Standards, Green Streets Standard Drawings, and specifications, should be used the maximum extent practicable for all public and private project design in the County ROW.

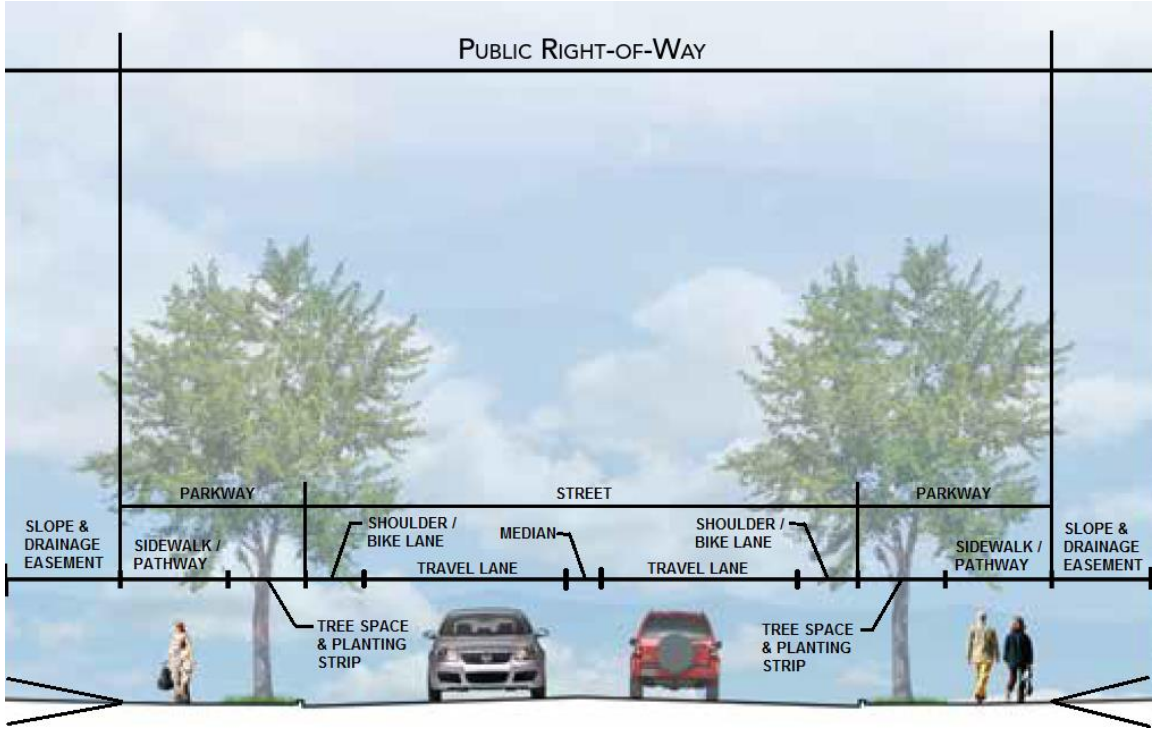

ROAD RIGHT-OF-WAY DIAGRAM
(Source: DDOT, 2014)

Early in the green street planning and design process careful consideration should be given to the location of existing and proposed utilities and appurtenances (utility poles, vaults, and pedestals), fire hydrants, traffic signals, signage, mail boxes, bus stops, and their interaction with the proposed green street measures.

CHAPTER 2 Green Streets Strategies

2.1 Introduction

Green Streets, including Green Infrastructure (GI), and Low Impact Development (LID) solutions are intended to be sustainable, attractive, and cost effective. The range of opportunities includes tree wells, landscape areas, rain gardens, rock gardens, permeable pavement, and removal of impervious pavement. These strategies use natural processes to reduce the volume of runoff, peak flow, and pollutants. This chapter will focus on five (5) areas appropriate for use in the road right-of-way.

Tree Wells

Trees are a powerful green streets tool due to their ability to intercept water on leaves, slowly deliver it to the mulch and soil, absorb it through root systems, and transpire it as water vapor directly back to the atmosphere.

Rain Gardens

Rain gardens use the natural functions of plants, mulch, and soils to remove pollutants and slow stormwater runoff. The strategy uses storage, sediment capture, and biological processes to clean the water. These mimic processes that occur in nature before water reaches waterways.

Rock Gardens

Rock gardens utilize shallow depressions to provide storage, evapotranspiration, and infiltration. This strategy also slows runoff, reduces peak flows and runoff volume.

Permeable Pavement

Permeable paving systems provide a hard surface, while allowing water to flow through to the underlying soils instead of directly to the drainage system. The areas where this strategy may be used include: sidewalks, pathways, medians, and parking lanes.

Remove Impervious Pavement

Roadway improvement projects have the opportunity to remove portions of impervious pavement within the right of way and replace it with permeable material.

2.2 Tree wells

Why Are Trees Important?

Trees make a streetscape feel welcoming, help manage stormwater, and reduce the urban heat island effect by providing shade. An urban heat island remains significantly warmer than the surrounding rural areas due to less vegetation. Trees promote air quality, natural habitat, the human environment, and well-being.

Trees in a congested road right-of-way are confined to small planting areas where they struggle to reach a mature size or live a long life. Through the use of Structural Soil, Structural Cell, or Suspended Sidewalk techniques, soil volumes and space for tree roots to grow uninhibited can be greatly increased. These techniques also allow for more water and air to reach the tree roots.

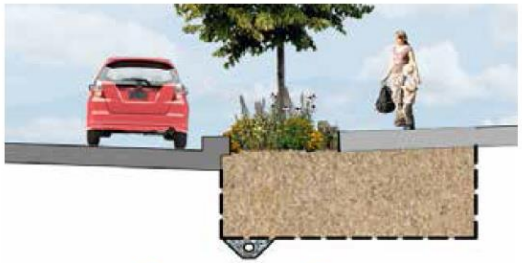

Structural Soils

A specific mix of stone and soil that supports the sidewalk while allowing tree roots to grow normally.

Structural Cells

Manufactured cells support the sidewalk allowing uncompacted soil to promote tree roots to grow below.

Suspended Sidewalk

Thickened sidewalk with reinforcement and/or footings can be used allowing tree roots to grow below the sidewalk.

(Source: DDOT, 2014)

Soil Volume Sizing

- Adequate planting soil space provides the nutrients, water, air, and root space that trees need to have a long, healthy life.
- The planting soil volume required depends on the fully-grown tree size (generally two cubic feet of soil per one square foot of the tree's mature drip line area).
- Planting soil amendments for trees should be three-feet deep; the length and width must ensure the appropriate volume for the tree species and site.

Other Considerations

- Provide as much open space as possible for the tree to allow the tree to grow and access water.
- Providing structural soils, suspended sidewalks, or structural slabs to edges of paved areas prevents planting soil compaction and encourages tree roots to extend further and into adjacent green areas.
- Evaluate temporary and permanent irrigation needs
- Evaluate utility locations and required clearance.

Design Issues

- Maintenance Access: allow for maintenance access from road
- Pedestrian Considerations: allow for 18-inch minimum setback from curb and minimum 48-inch sidewalk width. Comply with ADA requirements.
- Suspended sidewalks and structural slabs/cells: may require evaluation by geotechnical and structural engineers
- Clear Recovery Zone: Consider clear recovery zone requirements and minimum setback requirements.
- Tree Size: Evaluate tree size versus the right of way width.

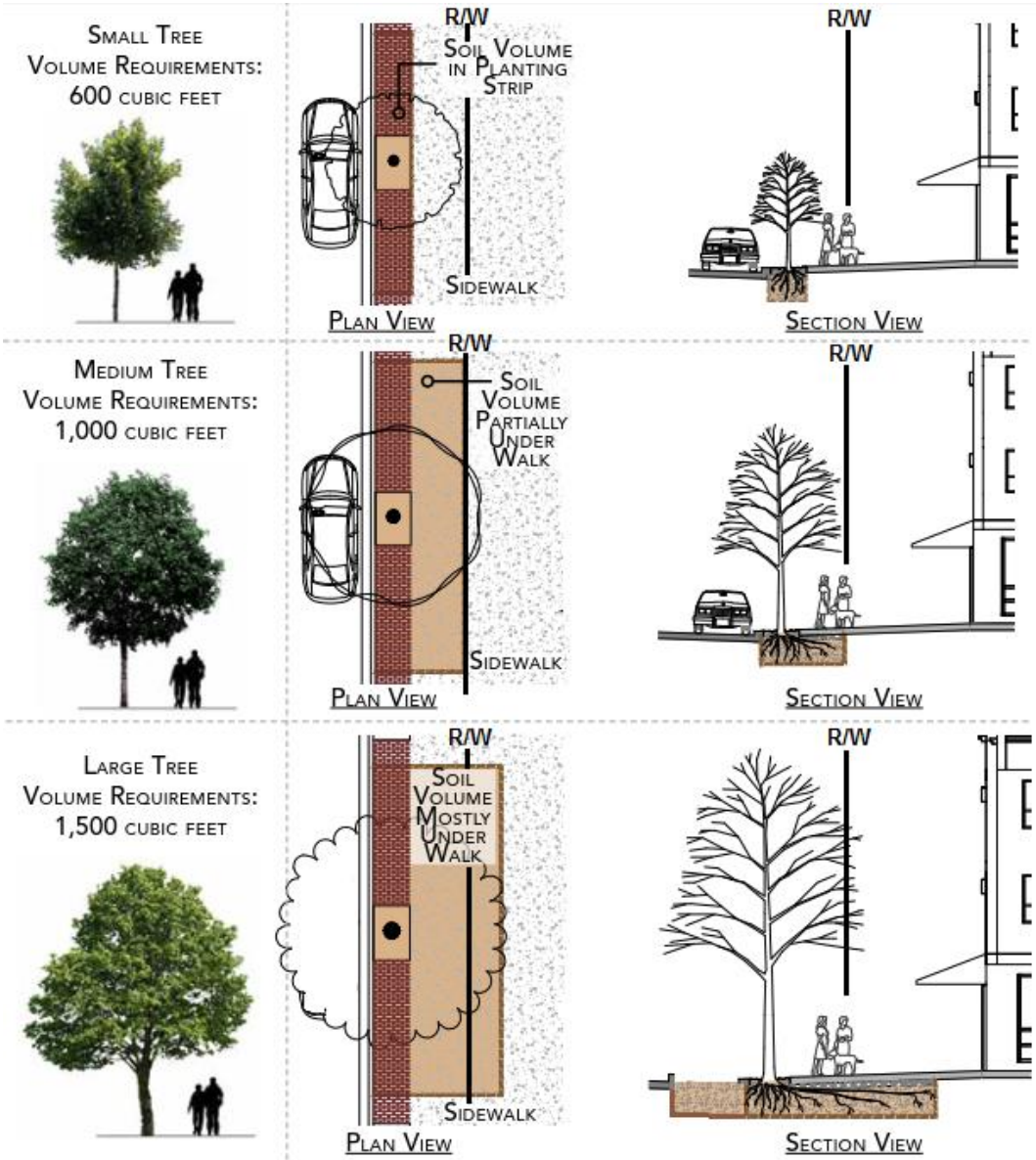

(Source: DDOT, 2014)
Note: Trees may also be located behind the sidewalk/pathway.

Tree Wells – What's Underneath?

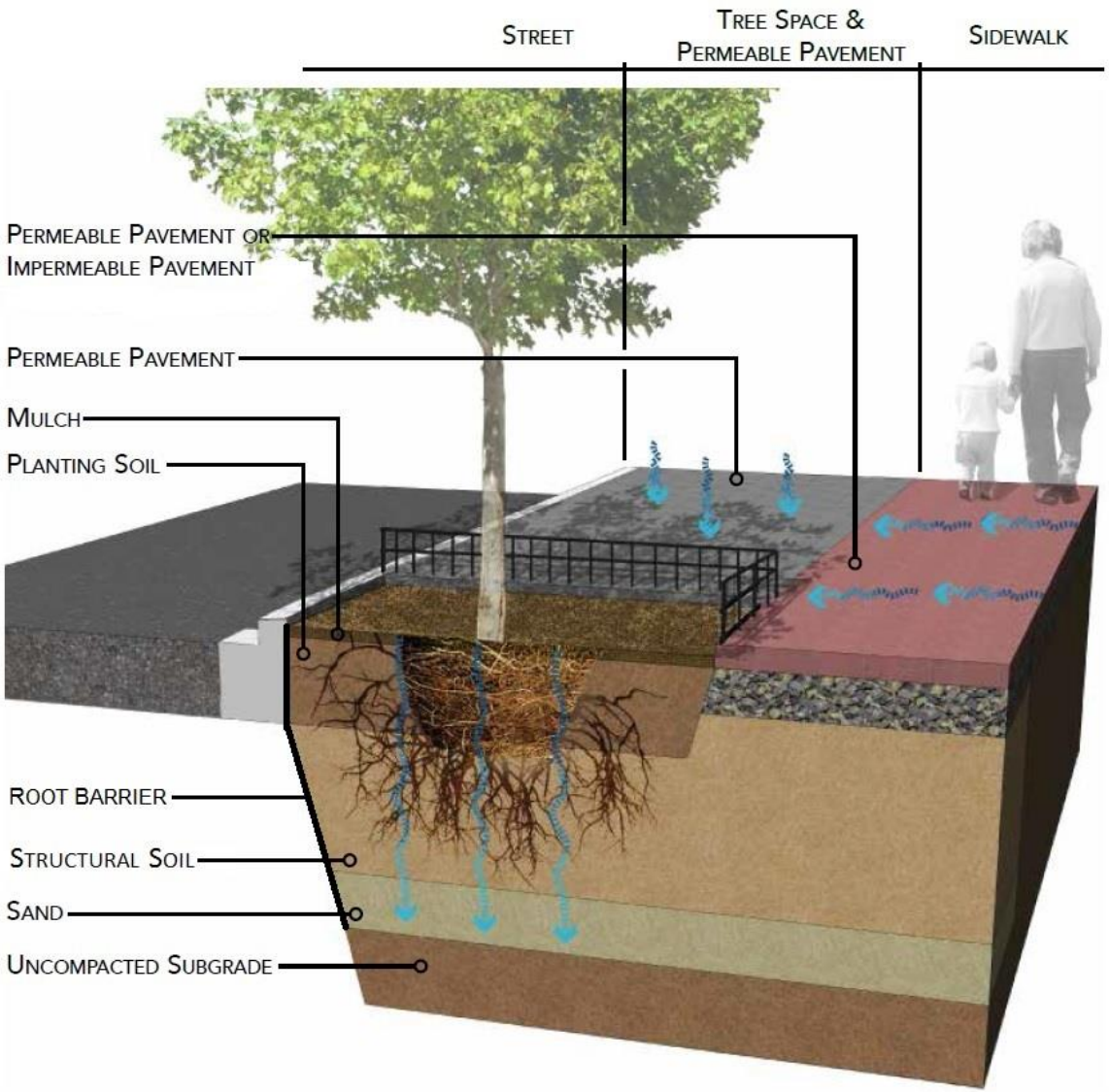

(Source: DDOT, 2014)

Note: Other options include suspended sidewalks and structural cells as shown on page 7.

Putting it Together

- Permeable Paver: Permeable pavers allow water to infiltrate into the planting soil to be used by the trees.
- Mulch: A soil topping that may be organic or inorganic material which covers the planting soil to retain water and trap pollutants.
- Planting Soil: Uncompacted and amended soil mix allows root growth when used in open areas, with structural cells, or suspended sidewalks.
- Structural Soil: Supports pavement and allows root growth.
- Sand: Acts as a drainage layer for excess stormwater (when needed).
- Uncompacted Subgrade: Existing soil where stormwater may infiltrate.

Water Trees with Stormwater

In addition to large planting soil volumes, trees need sufficient water, air, and nutrients to be successful in the road right-of-way environment. Tree space design includes integrating opportunities for directing stormwater into the soil. See the County of San Diego's Water Conservation in Landscaping Ordinance for irrigation requirements.

2.3 Types of Rain Gardens

What is a Rain Garden?

Rain gardens are landscape systems that filter pollutants and sediment from runoff. The layers of plant material, mulch, engineered soil media (a mix of planting soil, sand, and compost), and stone capture metals, nutrients, and bacteria that would otherwise flow into the surrounding creeks and rivers. The rainwater is held in the planting bed until it infiltrates into the ground or evaporates. The entire system can fit into small spaces, making it adaptable to tree spaces along the road, planter boxes, curb extensions, medians, roundabouts, and open areas.

Planter Boxes

Runoff follows the existing curb line and enters the facility through curb cuts. Excess runoff exits through the same curb cuts or into drains located in the planting area.

Curb Extension

Runoff follows the existing curb line and enters the facility directly. Excess runoff flows through the system and returns to the curb and gutter downstream.

Medians

Runoff follows the existing curb line and enters the facility through curb cuts. Excess runoff flows through the system or into drain inlets.

Bulb-out at Intersection

Runoff follows the existing curb line and enters the facility through curb cuts. Excess runoff flows through the system or into drains inlets.

Vegetated Filter Strip

Runoff enters the facility directly via sheet flow. Excess runoff flows through the system to a drain inlet downslope.

Swales

Runoff enters the facility directly or through curb cuts. Excess runoff flows through the system to a drainage outlet.

Traffic Circle/Roundabout

Runoff follows the existing curb line and enters the facility through curb cuts. Excess runoff flows through the system or into drains located in the planting area.

Open Areas

Runoff drains into the planting area from the surrounding area. The size and shape can fit the available space.

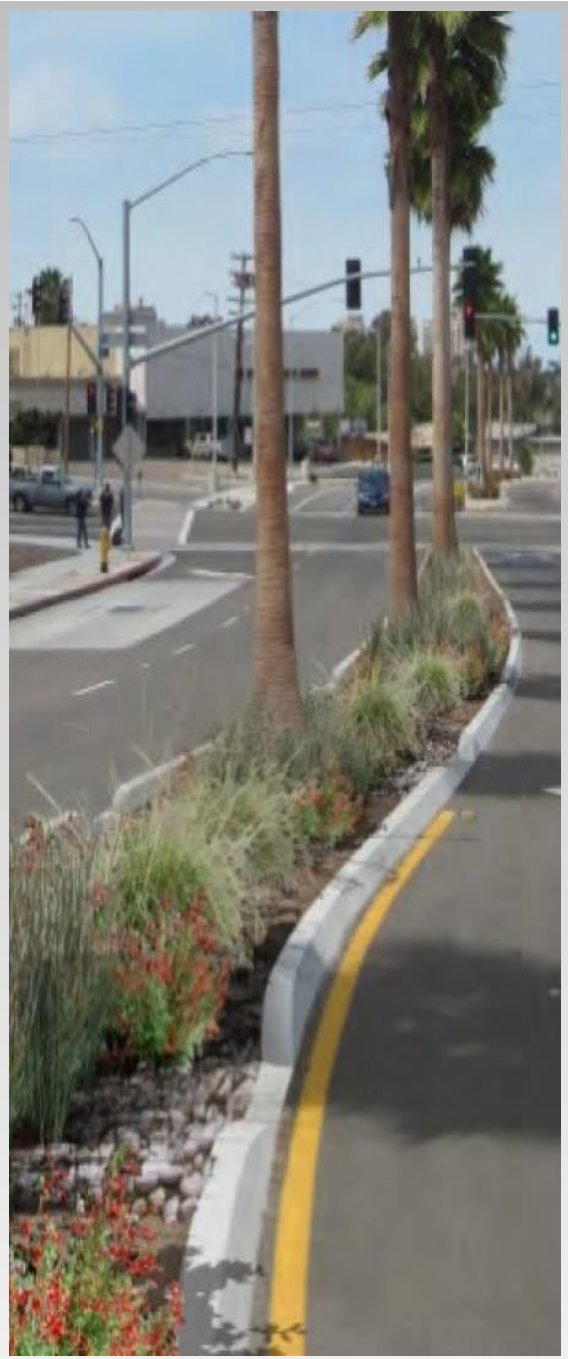

(Source: County of San Diego, 2014)

Where to Use?

- Street with no adjacent on-street parking.
- Where Tree wells are needed.
- Street where bike lane is adjacent to curb.

Limitations

- Not for on-street parking.

Design Issues

Maintenance Access: Allow for adequate maintenance access from road.

Pedestrian Considerations: Allow for minimum allowable sidewalk width. Consider trip hazards and fall protection. Comply with ADA requirements.

Planter Box Adjacent to Roadway

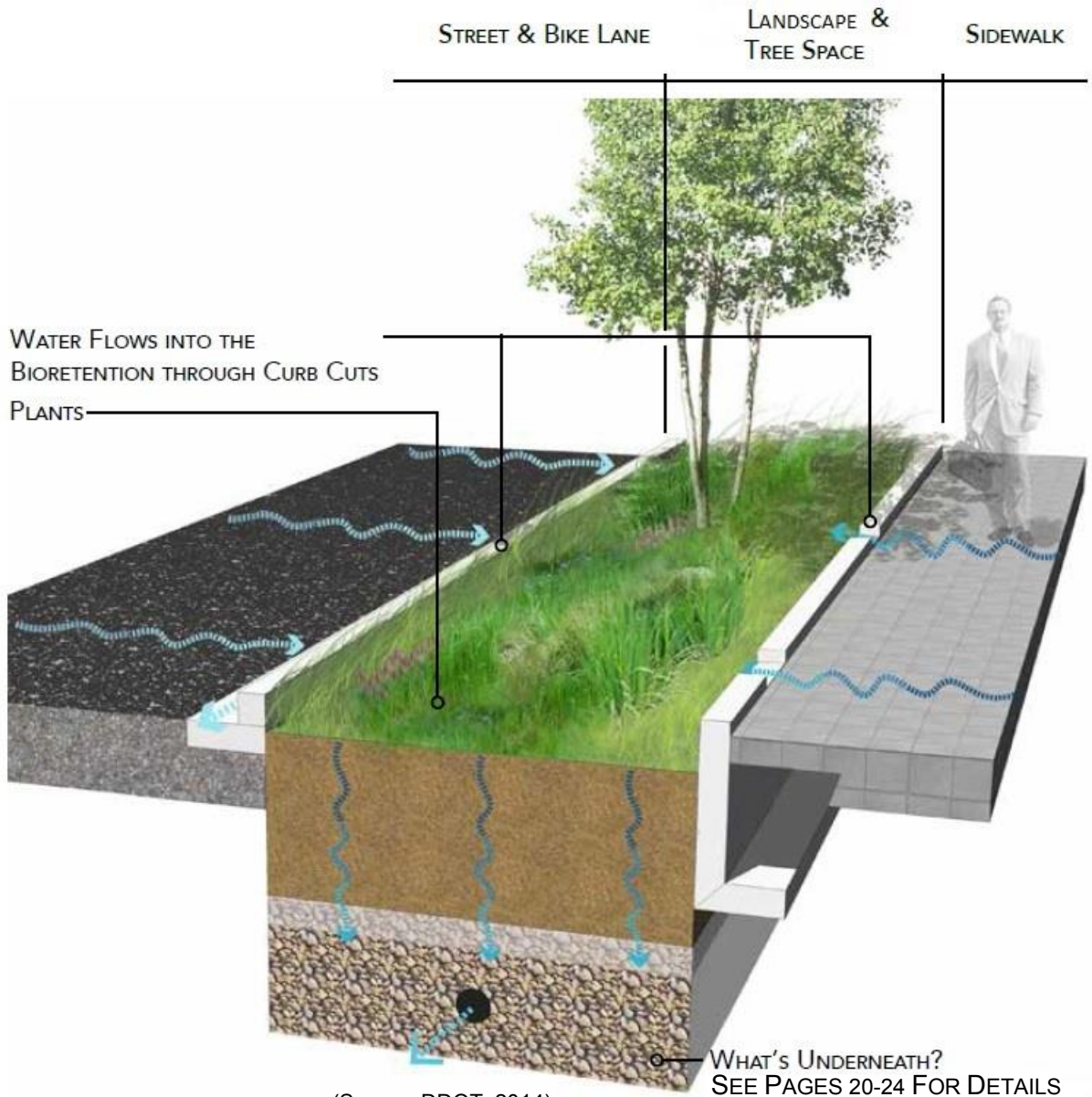

(Source: DDOT, 2014)

Planter Box with Step Out Zone

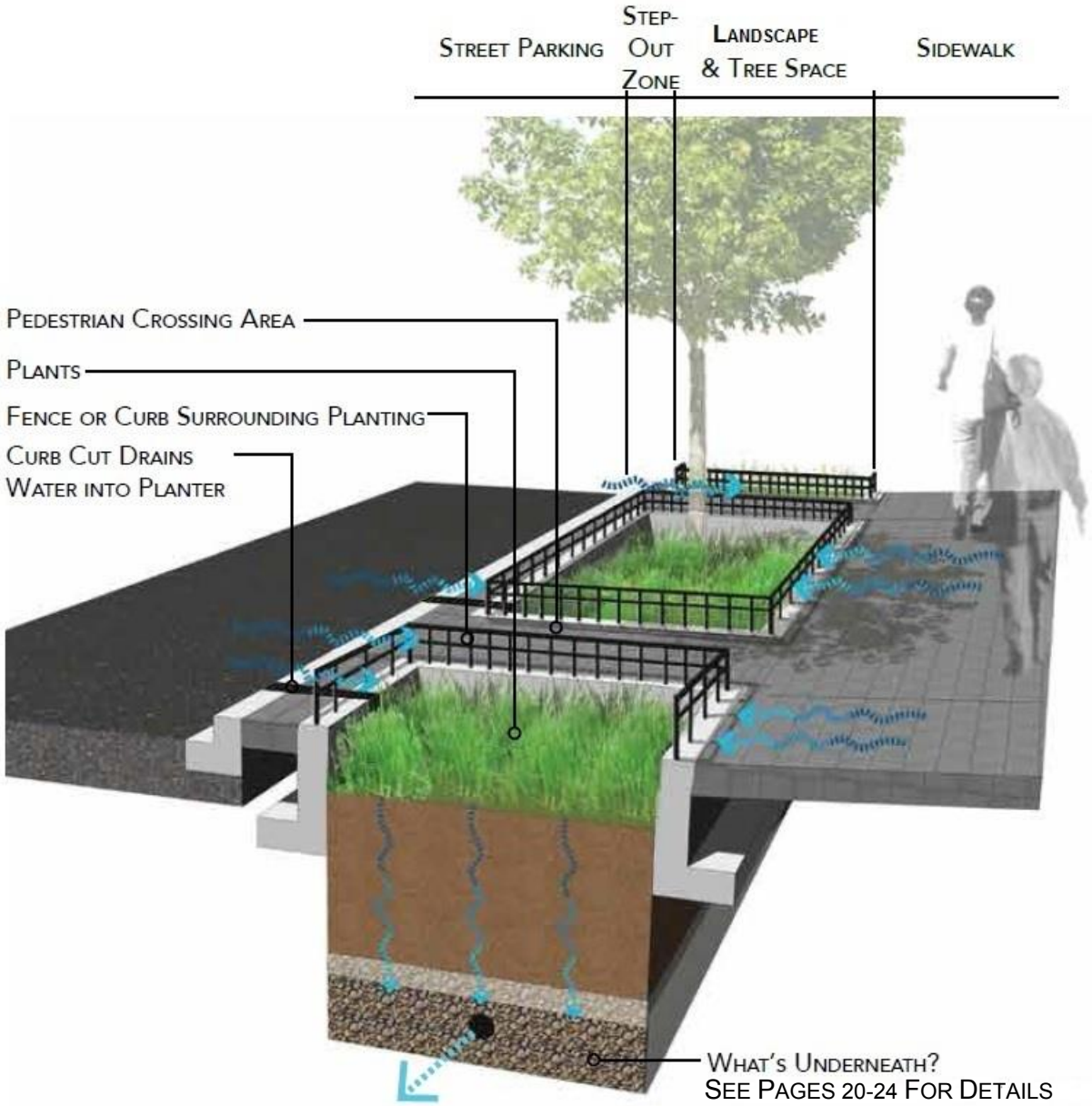

(Source: DDOT, 2014)

Where to Use?

- Wide sidewalk area with adjacent on-street parking.
- High-volume pedestrian areas.
- Areas with other streetscape features (lights, bike racks, bus stops, etc.).

Limitations

- Do not disturb existing, mature trees and root systems.
- Provide low fence or curb for pedestrian safety.

Design Issues

Planting Design: Same as for planter box adjacent to roadway.

Maintenance Access: Allow for adequate maintenance access from road.

Pedestrian Considerations: Areas in the streetscape can have dropped or have sloped sides. Short fences or curbs prevent pedestrians from stepping into a recessed area. Planter boxes with side slopes can use a small step-out area in place of a fence or curb. When the planter box is next to street parking areas, a step-out zone must be provided to allow access from the vehicle to the sidewalk. Crossing areas must be provided between street parking and the sidewalk. Comply with ADA requirements.

Where to Use?

- Areas with low on-street parking demand.
- In wide roadways.
- For traffic calming.
- In “no parking areas” on street (excluding loading zones and curb cuts).
- Next to mature trees.

Limitations

- Sufficient street parking or off-street parking must be available to residents.
- Do not disturb existing, mature trees and root systems.
- Ensure sight lines and turning radii are preserved.

Design Issues

Maintenance Access: Allow for adequate maintenance access from road.

Pedestrian Considerations: Consider trip hazards and fall protection. Short fences or curbs prevent pedestrians from stepping into a recessed area. A 3:1 transition from the sidewalk to planter bottom is an alternative. Comply with ADA requirements.

Parking: Consider trip hazards and adequate spacing in order to park.

Flood Control: Locate so that stormwater can drain away from the roadway and be directed through the curb inlet.

Bike Lanes: Consider bike lane traffic.

Curb Extension

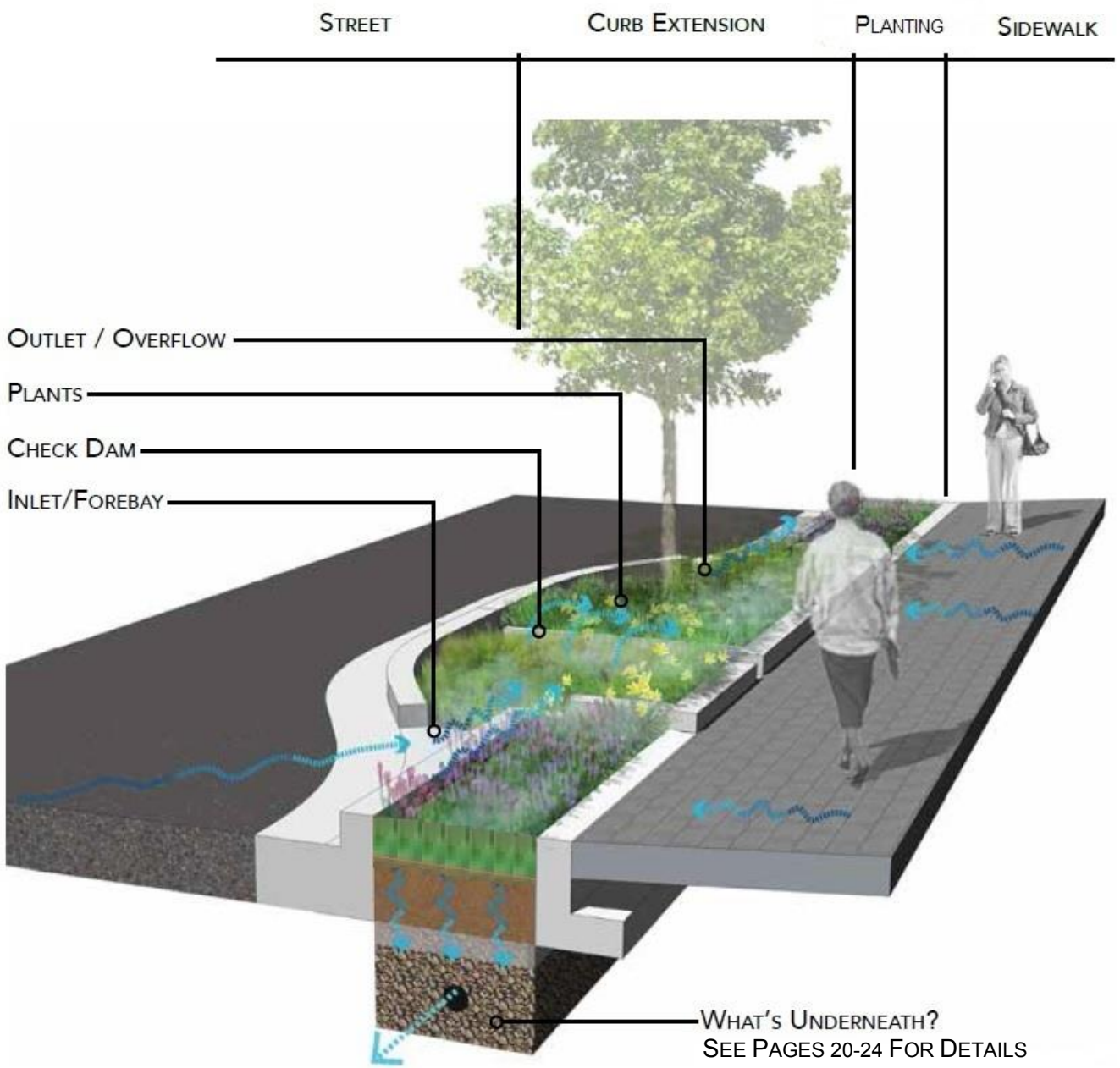

(Source: DDOT, 2014)

Swale Adjacent to Roadway

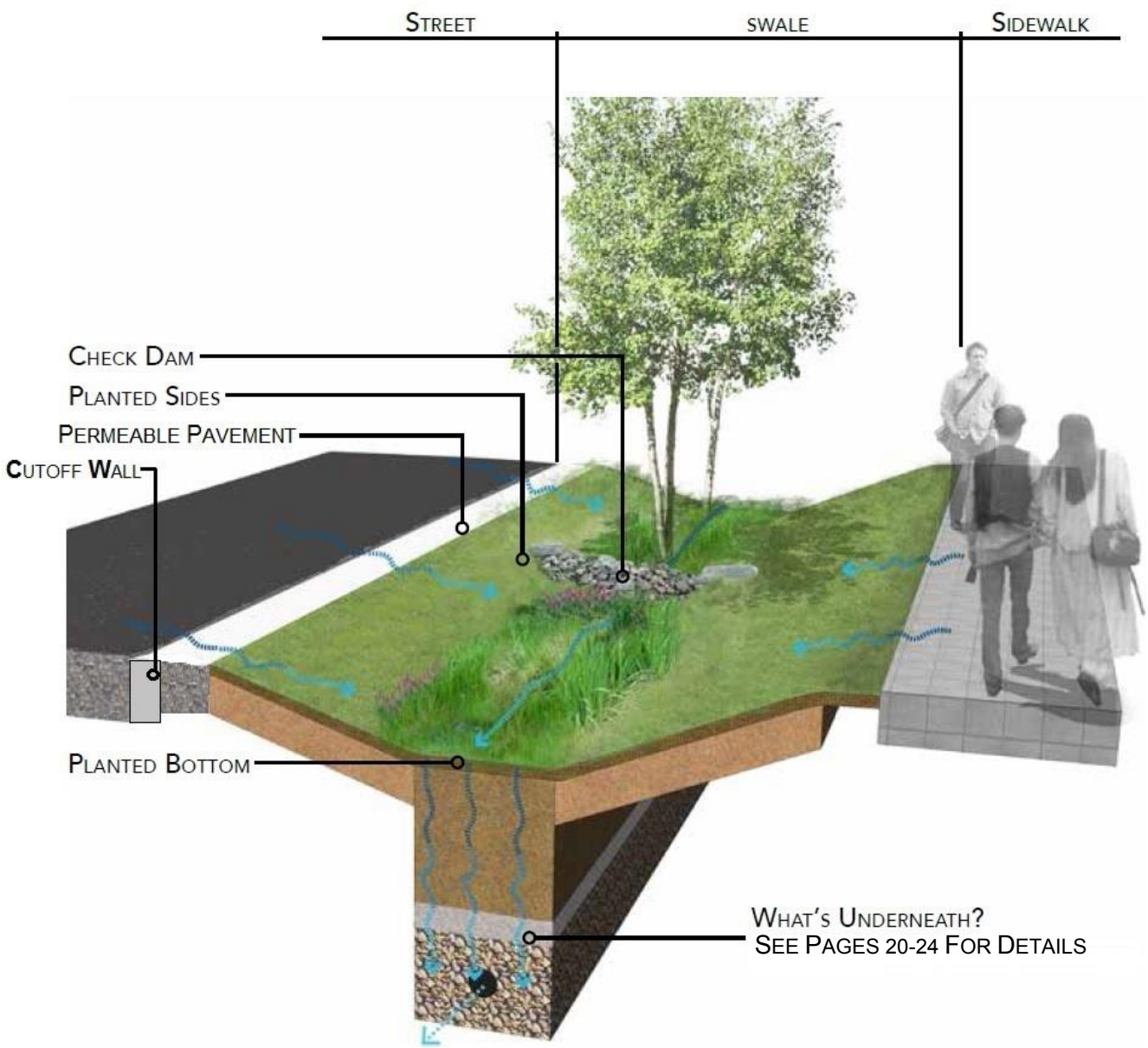

(Source: DDOT, 2014)

Where to Use?

- On street with no curb.
- In wide ROW area with or without sidewalk.
- Areas with less pedestrian use.

Limitations

- Not suitable for narrow sidewalk areas.

Design Issues

Slope and Check Dams: Swales are placed where street runoff is flowing and optimally before catch basins that convey water from the street to the drainage system. Swales may be built on moderate slopes with the use of check dams. Rock armoring or turf reinforcement mat may be required in steep areas with erosive velocities between check dams.

Maintenance Access: Allow for adequate maintenance access from road.

Pedestrian Considerations: Limit pedestrian access to swale. Transition swale at intersections for pedestrian facilities. Comply with ADA requirements.

Driveway Crossings: Driveway crossings may limit swale lengths.

Vegetated Filter Strip

Where to Use?

- Where runoff can sheet flow into filter strip area.
- Moderate slopes (less than 5%) adjacent to impervious area of treatment (sidewalk or road).
- Rural areas.

Limitations

- Not recommended on steep slopes.
- Prone to rill formation.
- Areas with on-street parking.

Design Issues

Maintenance: Vegetated cover must be maintained to ensure that filter strips do not export sediment due to erosion of exposed ground.

Slope: Maximum slopes in the direction of flow will be based upon drainage area size, soil type, vegetation cover, and slope length to prevent rill formation. Slopes less than 5% are preferred.

Maintenance Access: Allow for adequate maintenance access from road.

Pedestrian Considerations: Limit pedestrian access across filter strip to prevent formation of dirt pathways. Comply with ADA requirements.

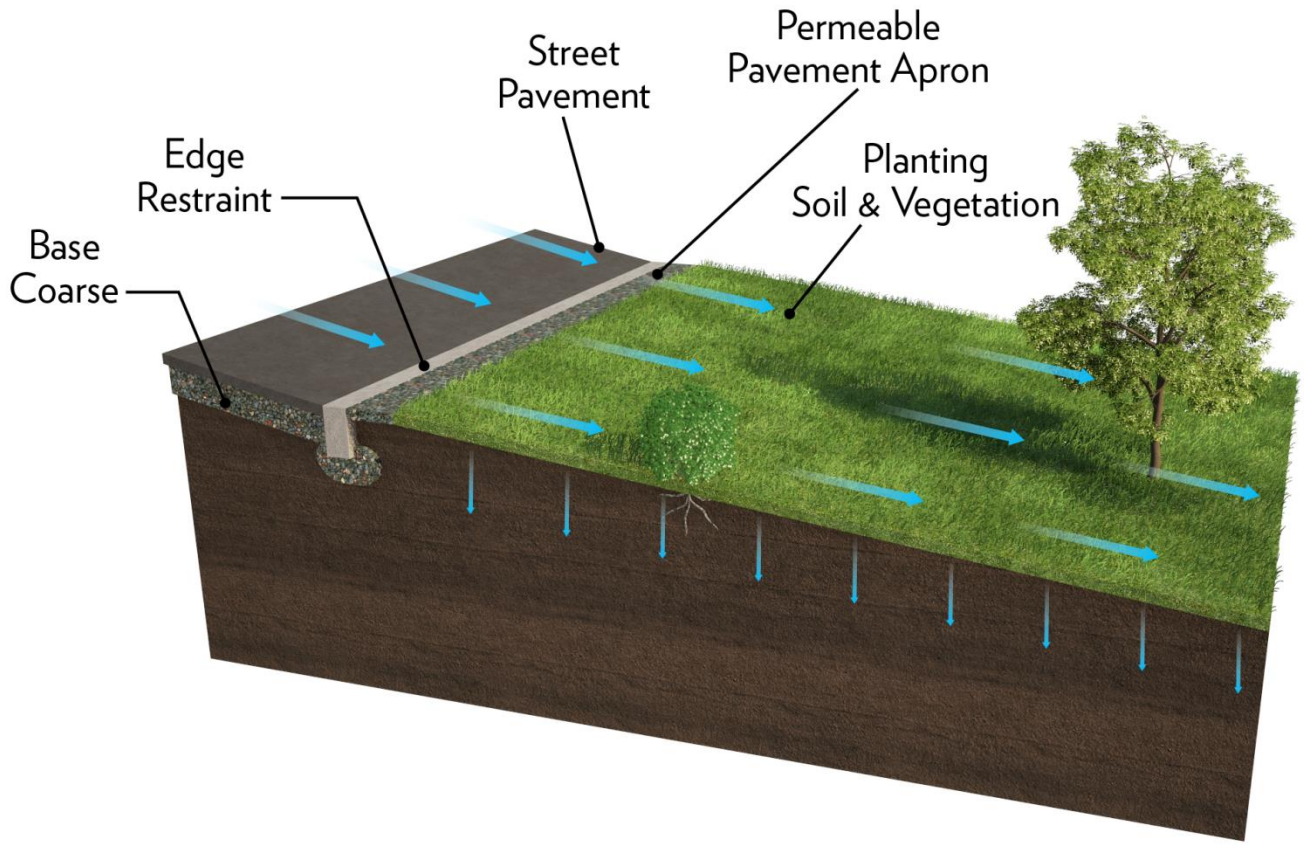

Vegetated Terraced Filter Strip

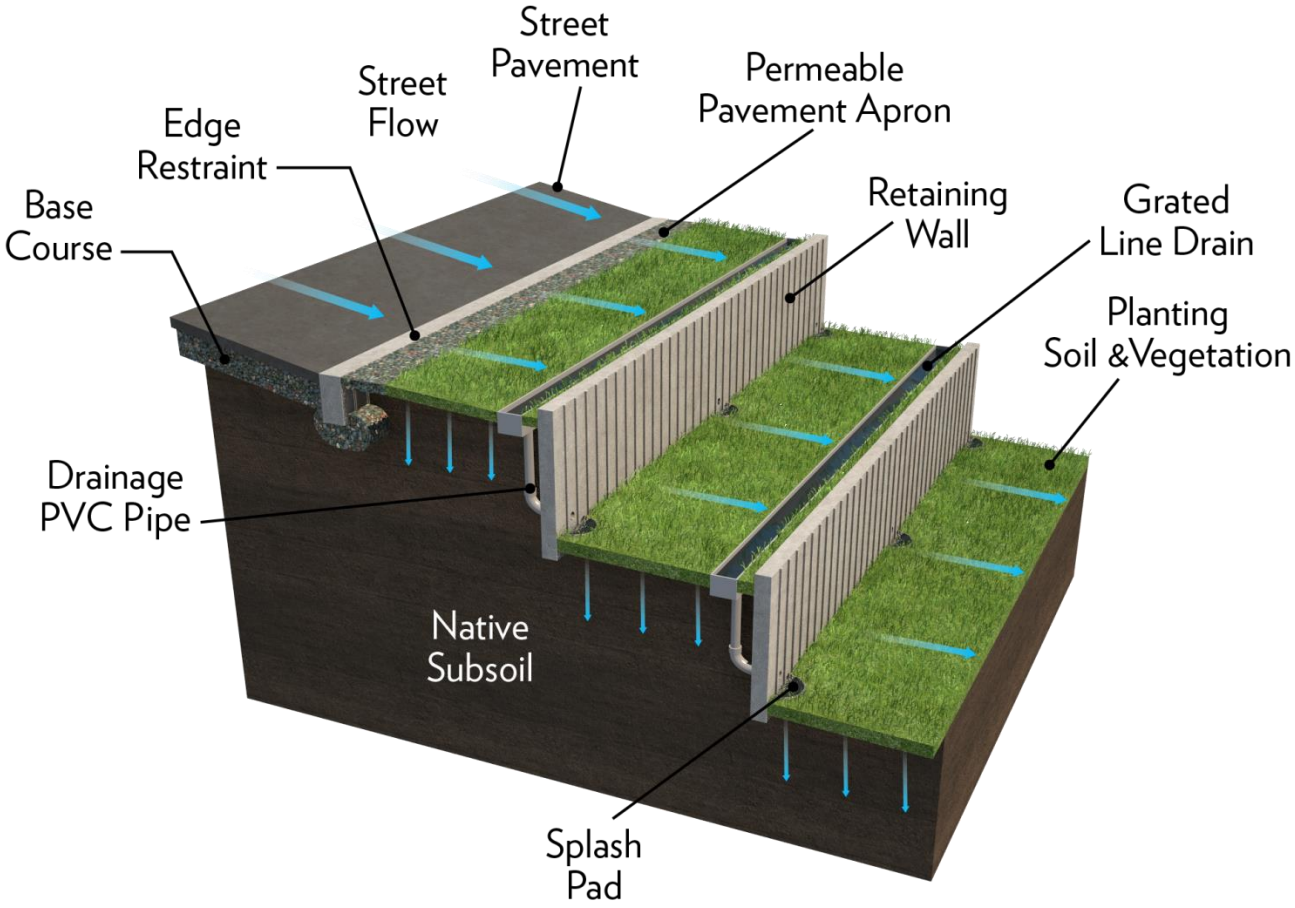

Where to Use?

- Where runoff can sheet flow into filter strip area.
- Steep slopes (greater than 5%) adjacent to impervious area of treatment (sidewalk or road).
- Rural areas.

Limitations

- Prone to rill formation.
- Areas with on-street parking.
- Walls over 3 feet tall require structural design.

Design Issues

Maintenance: Vegetated cover must be maintained to ensure that filter strips do not export sediment due to erosion of exposed ground.

Slope: Maximum slopes in the direction of flow will be based upon drainage area size, soil type, vegetation cover, and slope length to prevent rill formation. Slopes less than 5% are preferred.

Maintenance Access: Allow for adequate maintenance access from road and bottom of slope.

Pedestrian Considerations: Limit pedestrian access across filter strip to prevent formation of dirt pathways. Comply with ADA requirements.

Where to Use?

- Areas with low on-street parking demand.
- In wide roadways.
- For traffic calming.
- In “no parking areas” on street (excluding loading zones and curb cuts).

Limitations

- Sufficient street parking or off-street parking must be available to residents.
- Ensure sight lines and turning radii are preserved.

Design Issues

Maintenance access: Allow for adequate maintenance access from road.

Pedestrian considerations: Short fences or curbs prevent pedestrians from stepping into a recessed area. Walkways and ramps may need to be designed through bulb-outs to provide pedestrian access at intersections. Comply with ADA requirements.

Design: Requires County Traffic Engineering Section approval.

Bulb-Out at Intersection

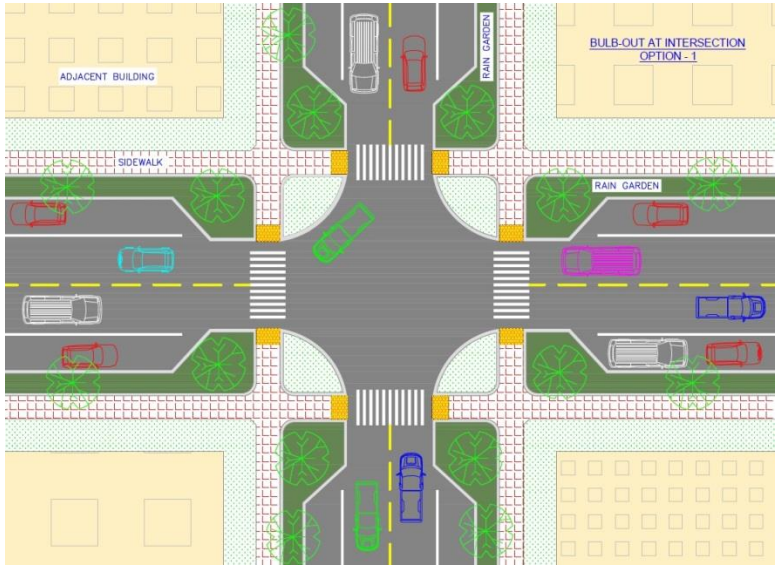

Roundabout

Where to Use?

- Areas with low on-street parking demand.
- In wide roadways.
- For traffic calming.

Limitations

- Sufficient street parking or off-street parking must be available to residents.
- Ensure sight lines and turning radii are preserved.

Design Issues

Maintenance Access: Allow for adequate maintenance access from road.

Pedestrian Considerations: Short fences or curbs prevent pedestrians from stepping into a recessed area. Comply with ADA requirements.

Design: Requires County Traffic Engineering Section approval.

The NRCS hydrologic soil groups are defined as:

• **Group A** soils have a high rate of percolation and a low runoff potential. The rate of water transmission is high; thus, runoff potential is low. Group A soils are generally referred to as sandy soils.

• **Group B** soils have moderate percolation rates when thoroughly wet. These are chiefly soils that are moderately deep to deep, moderately well-drained to well-drained, and moderately coarse textured. Rate of water transmission is moderate.

• **Group C** soils have a slow percolation rate when thoroughly wet. They are chiefly soils that have a layer impeding the downward movement of water, or they are moderately fine to fine-textured soils that have a slow infiltration rate. The rate of water transmission is slow.

• **Group D** soils have very slow percolation rates when thoroughly wet. They are clays that have a high shrink-swell potential, soils that have a high permanent water table, soils that have a claypan or clay layer at or near the surface, or soils that are shallow over nearly impervious material. The rate of water transmission for group D soils is very slow.

Rain Gardens – What's Underneath?

Soil Type and Infiltration Rate

Rain gardens can be located in many areas. However, site constraints will help to determine what goes underneath the rain garden. Common considerations include soil type, relative soil compaction, required utility setbacks, slope setbacks, and structural setbacks. Depending on the factors at the site, what's underneath the rain garden is determined by the level of infiltration: high, medium, low, or none.

A qualified engineer practicing geotechnical services shall review the proposed stormwater infiltration to provide a professional opinion regarding the potential adverse geotechnical conditions that the implementation of these practices may create. Geotechnical conditions such as slope stability, expansive soils, compressible soils, seepage, groundwater, and loss of foundation or pavement subgrade strength should be considered.

The U.S. Department of Agriculture Natural Resources Conservation Service (NRCS), formerly the Soil Conservation Service, conducted a soil survey of the San Diego area in the early 1970s. The NRCS has classified San Diego area soils with respect to: (1) their ability to accept and absorb water, (2) their tendency to produce runoff, and (3) their erodibility.

The soil survey classified soil runoff potential into four hydrologic soil groups labeled A through D. Group A and B soils exhibit the greatest infiltration rates (unless soils are compacted during construction) and are generally best suited to stormwater percolation. The San Diego area, however, has a relatively high concentration of group C and D soils, which exhibit lower percolation rates that generally limit the use of infiltration-based stormwater management systems. Instead, rain garden facilities are often equipped with underdrains. Such a design provides for filtration of the water quality design event through an engineered soil media as well as incidental infiltration of low flows.

Retaining a geotechnical engineer and conducting exploratory excavations at the site are highly recommended. Consideration should be given to the effects of urbanization on the natural hydrologic soil group. If heavy equipment can be expected to compact the soil during construction, or if grading will mix the surface and subsurface soils, appropriate changes should be made in the soil group selected.

HIGH INFILTRATION

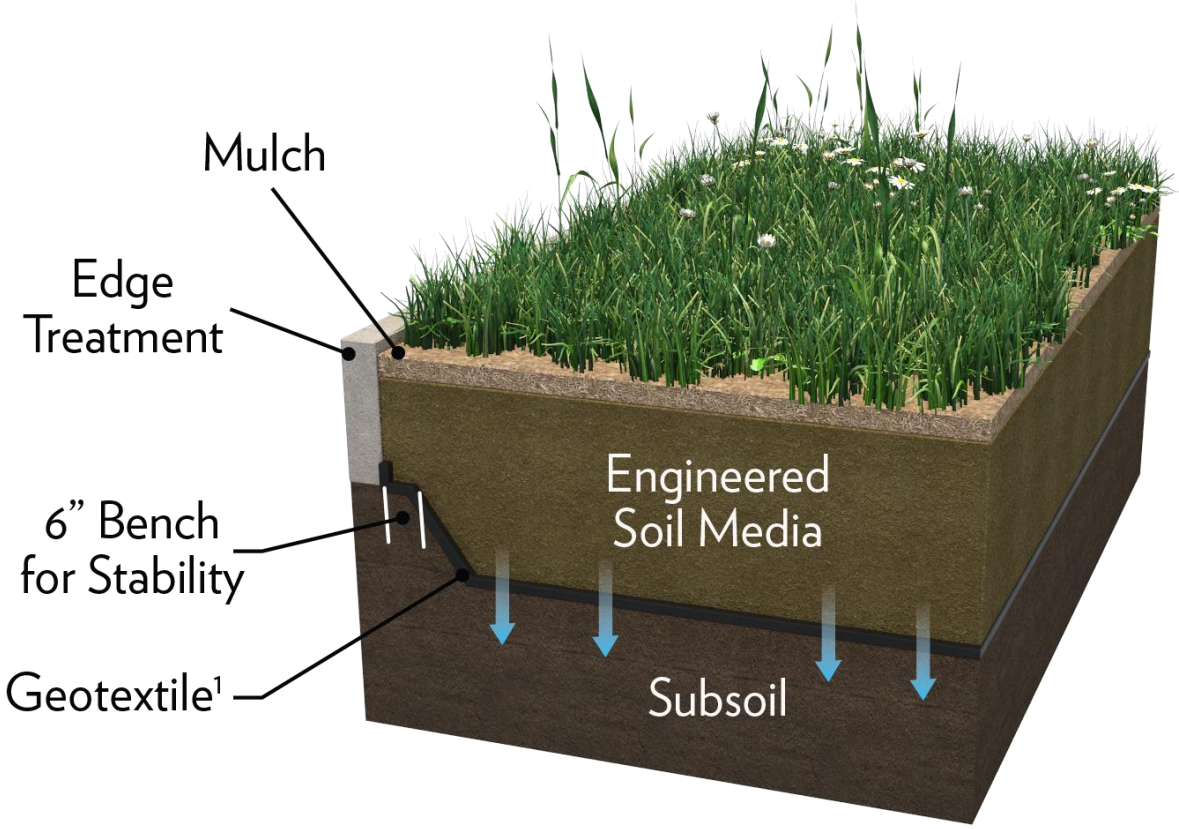

HIGH INFILTRATION

Notes:
1. Geotextile per Geotechnical Engineer's Recommendations (street side and sidewalk side).

PUTTING IT TOGETHER

- Ponding Depth: Stores runoff within the planting area prior to treatment.
- Mulch: A soil topping that may be organic or inorganic material which covers the planting soil to retain water and trap pollutants.
- Engineered Soil Media: A specific blend of soil, compost, and sand to retain and drain water and support plant growth.
- Geotextile: Prevents existing soil from migrating into the engineered soil media.
- Uncompacted Subsoil: Existing soil where stormwater infiltrates.

COMMON DESIGN ISSUES

Utilities: In the County, utility lines are common and necessary components of infrastructure within the right-of-way. Utility lines should be avoided where necessary and allowed to coexist where possible.

Putting it Together

- Ponding Depth: Stores runoff within the planting area prior to treatment.
- Mulch: A soil topping that may be organic or inorganic material which covers the planting soil to retain water and trap pollutants.
- Engineered Soil Media: A specific blend of soil, compost, and sand to retain and drain water and support plant growth.
- Choker Layer: Sand and gravel to prevent engineered soil media from migrating into the reservoir.
- Reservoir Layer: Stone to hold excess water until it infiltrates.
- Geotextile: Prevents existing soil from migrating into the engineered soil media and stone reservoir layer.
- Uncompacted Subgrade: Existing soil where stormwater infiltrates.

Common Design Issues

Utilities: In the County, utility lines are common and necessary components of infrastructure within the right-of-way. Utility lines should be avoided where necessary and allowed to coexist where possible.

Medium Infiltration

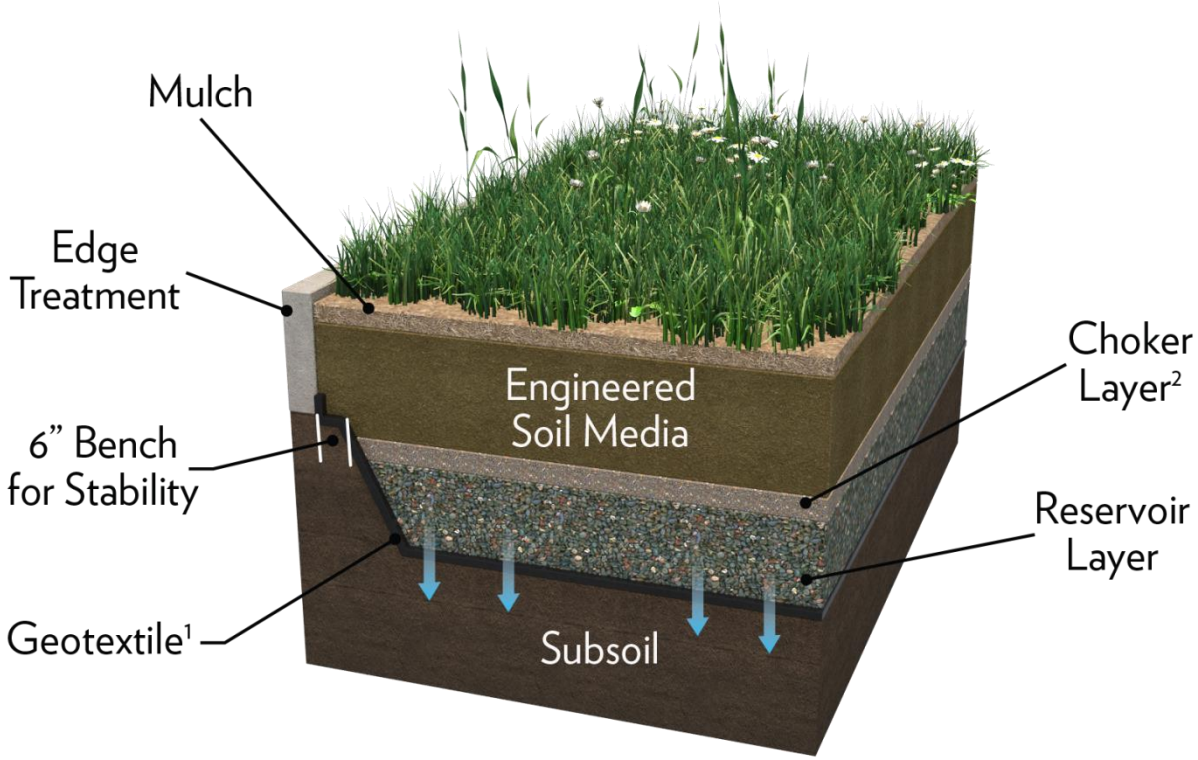

MEDIUM INFILTRATION

Notes:
1. Geotextile per Geotechnical Engineer's Recommendations (street side and sidewalk side).
2. Choker layer may be required depending the type of reservoir layer.

LOW INFILTRATION

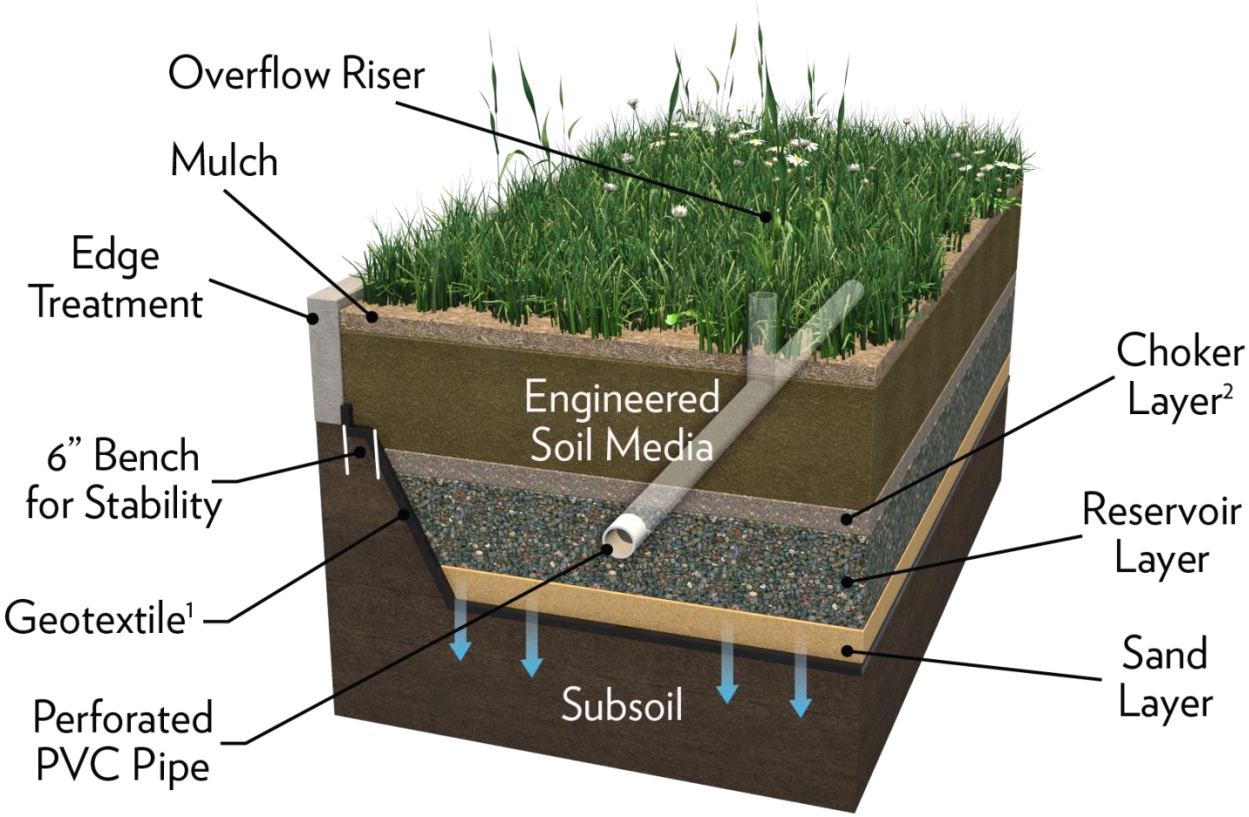

LOW INFILTRATION

Notes:
1. Geotextile per Geotechnical Engineer's Recommendations (street side and sidewalk side).
2. Choker layer may be required depending the type of reservoir layer.

PUTTING IT TOGETHER

- Ponding Depth: Stores runoff within the planting area prior to treatment.
- Overflow Riser: Pipe to capture high water flow.
- Mulch: A soil topping that may be organic or inorganic material which covers the planting soil to retain water and trap pollutants.
- Engineered Soil Media: A specific blend of soil, compost, and sand to retain and drain water and support plant growth.
- Choker Layer: Sand and gravel to prevent engineered soil media from migrating into the reservoir.
- Reservoir Layer: Stone to hold excess water until it infiltrates.
- Underdrain: An underdrain is required.
- Geotextile: Prevents existing soil from migrating into the engineered soil media and stone reservoir layer.
- Uncompacted Subgrade: Existing soil where stormwater infiltrates.

COMMON DESIGN ISSUES

Utilities: In the County, utility lines are common and necessary components of infrastructure within the right-of-way. Utility lines should be avoided where necessary and allowed to coexist where possible.

Putting it Together

- Ponding Depth: Stores runoff within the planting area prior to treatment.
- Overflow Riser: Pipe to capture high water flow.
- Mulch: A soil topping that may be organic or inorganic material which covers the planting soil to retain water and trap pollutants.
- Engineered Soil Media: A specific blend of soil, compost, and sand to retain and drain water and support plant growth.
- Choker Layer: Sand and gravel to prevent engineered soil media from migrating into the reservoir.
- Reservoir Layer: Stone to hold excess water until it enters the underdrain.
- Underdrain: An underdrain is required.
- Impermeable Liner: Prevents infiltration and prevents existing soil from migrating into the engineered soil media and stone reservoir layer.

Common Design Issues

Utilities: In the County, utility lines are common and necessary components of infrastructure within the right-of-way. Utility lines should be avoided where necessary and allowed to coexist where possible.

No Infiltration

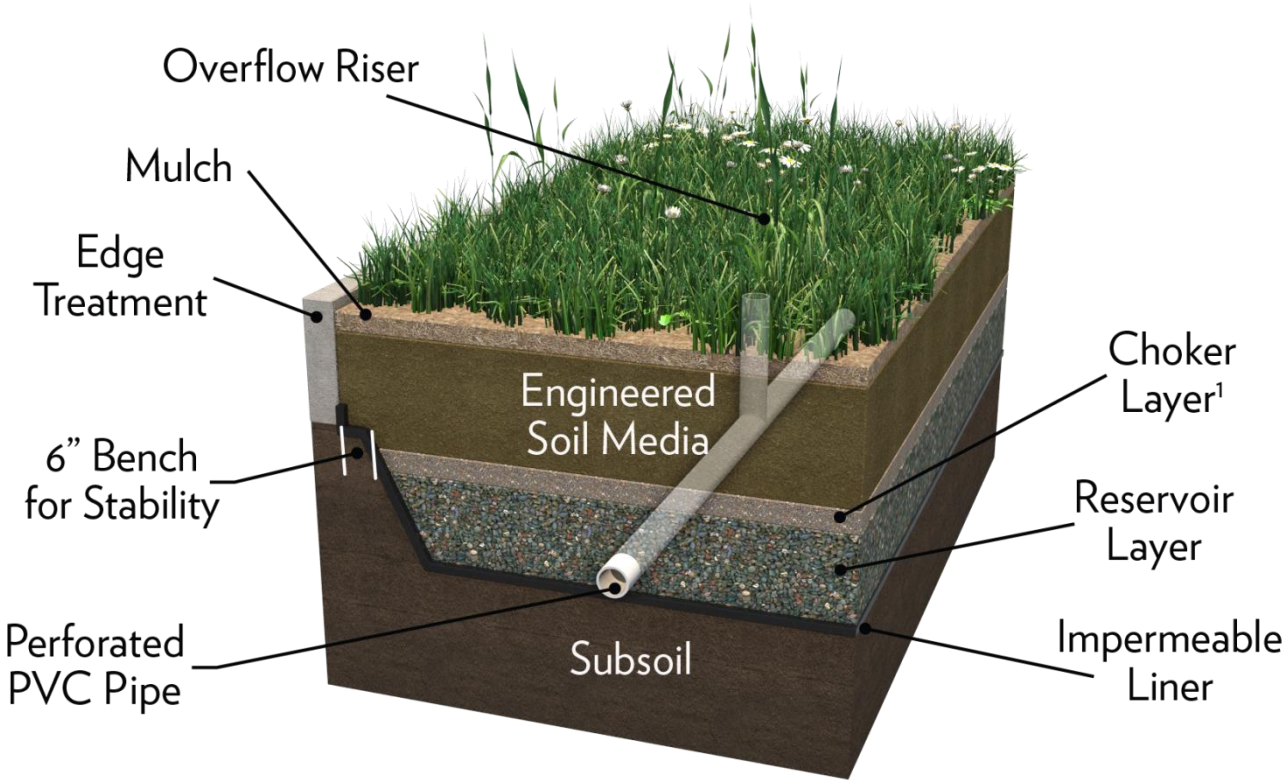

NO INFILTRATION

Notes:
1. Choker layer may be required depending the type of reservoir layer.

2.4 Planting & Irrigation of Rain Gardens, Trees, and Other Areas

Planting Design

Tree wells and rain gardens add a landscape amenity to the street-scape. Trees, shrubs, grasses and perennials are used to create a diverse landscape suitable for the site conditions and neighborhood. Plants should be chosen based on the level of care expected at the facility. Planting design must be done to ensure sight lines are preserved for pedestrians, cyclists, and vehicles on the street.

Existing trees are an important component of the green street. Mature trees capture stormwater, provide shade, and cool pavement. Existing trees should be protected when implementing green streets and not disturbed during construction.

Refer to the County of San Diego's Water Efficient Landscape Design Manual and Low Impact Development Handbook for suitable plant species to use in rain garden areas. Also refer to the community right of way development standards for suitable plants within specific communities.

Irrigation Design

Irrigation design should comply with the County of San Diego's Water Efficient Landscape Design Manual.

Planting Zones (Hydrozones)

Grouping plants into hydrozones is an approach to irrigation and planting design where plants with similar water needs are grouped together. Ideally, each zone of the irrigation system will supply plants with the same water needs with the appropriate amount of water.

Water Conservation

State executive order B-29-15 requires mandatory statewide water restrictions. This order prohibits ornamental turf on public street medians, and requires a reduction in potable water use for irrigation. Low water use, drought tolerant, native plants should be used for Green Streets applications. The use of reclaimed water is recommended to reduce the amount of potable water used for irrigation.

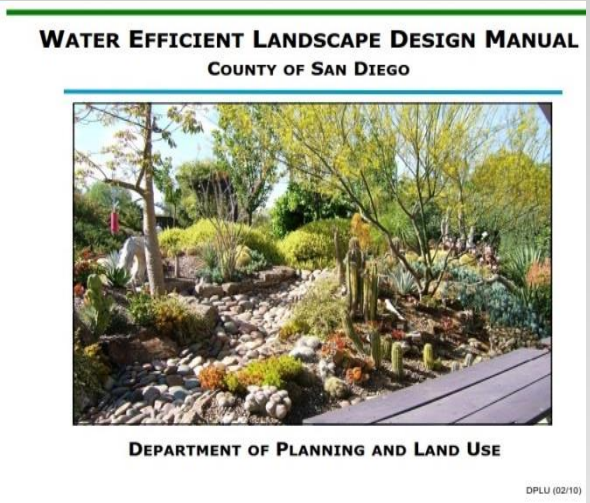

2.5 Types of Rock Gardens

What Is a Rock Garden?

Rock gardens utilize swales and shallow depressions to provide storage, evaporation, and infiltration. Runoff is stored in the void space between the stones in a rock swale or rock basin. It then infiltrates through the bottom into the soil matrix. Infiltration removes fine sediment and associated pollutants by filtering stormwater through engineered soil media. Medians and other areas with difficult maintenance or no pedestrian access are potential locations for rock gardens.

Rock Swale

Rock swales are identical to rain garden swales except that the surface is typically covered by rock mulch rather than organic mulch and vegetation. Rock swales can serve as conveyance for stormwater and can be used in place of traditional curbs and gutters in some locations; however, when compared to traditional conveyance systems rock swales slow stormwater down and increases the time of concentration. This can reduce peak flows at drainage inlets and reduce flooding downstream. With a narrow width, rock swales can be integrated into site plans with various configurations.

Rock Basin

A rock basin is a shallow impoundment that is designed to infiltrate stormwater into the soil. The basic design goal of a rock basin is to provide opportunities for runoff from small storms to enter the soil rather than discharging directly into a drainage system. Rock basins typically have high pollutant removal efficiency, and can also help recharge the groundwater, thus restoring low flows to stream systems. Rock basins also act as miniature detention basins that reduce peak flows and reduce flooding downstream. Multiple rock basins can be distributed across a site instead of constructing a single large detention basin.

Rock Swale

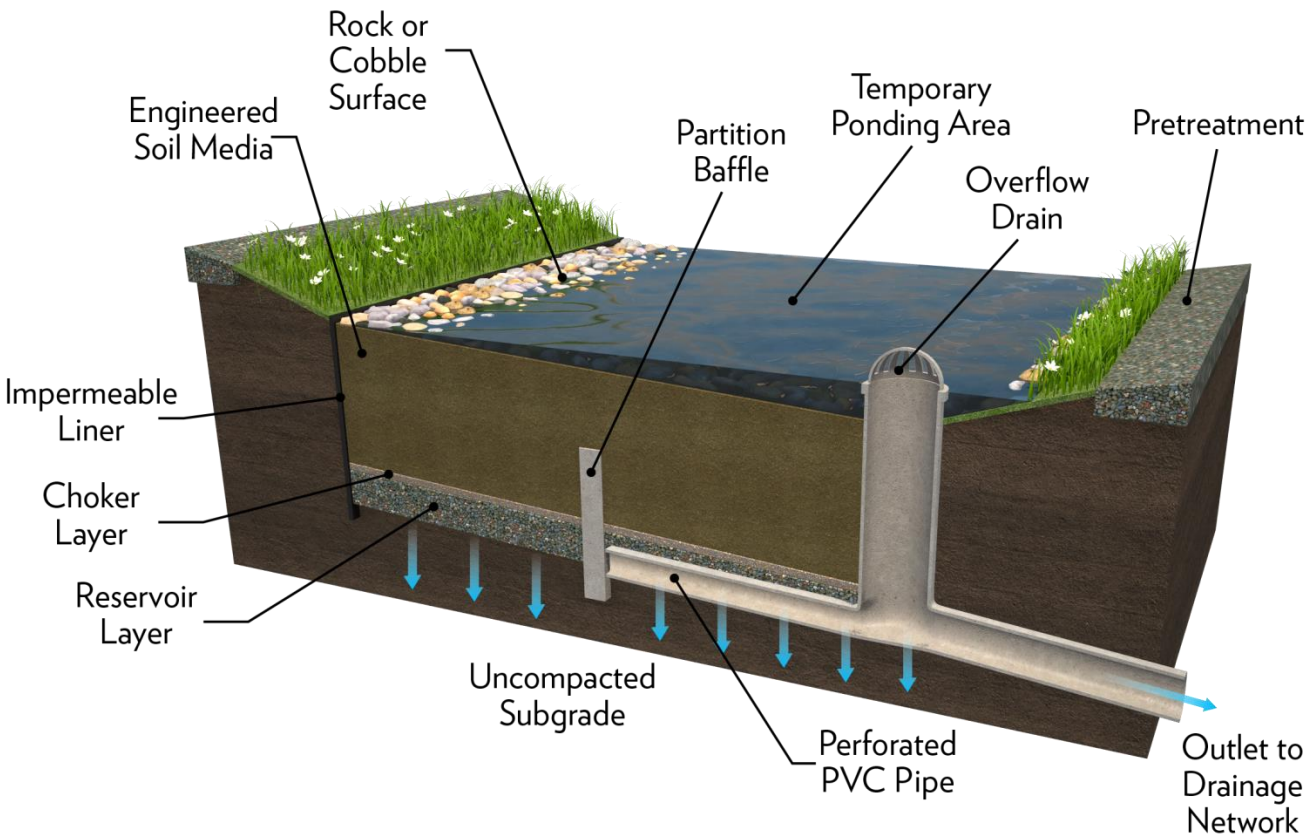

Note: The section above includes the use of an underdrain. As with vegetated swales and rain gardens, the subsurface drainage may consist of one of several options that may or may not include an underdrain, choker layer, stone reservoir or permeable/impermeable geotextile liner.

Where to Use?

- Where vegetation growth will be difficult.
- Along borders or medians of parking lots.
- Where traditional swale widths are too wide for application.
- Within a "Hazardous Fire Area," as that term is defined in the County Fire Code.

Limitations

- May not be suitable in areas with high pedestrian traffic.

Design Issues

Utilities: Utility lines should be avoided where necessary and allowed to coexist where possible.

Maintenance access: Allow for adequate maintenance access from road. A forebay or pretreatment to remove sediment improves maintainability of swale.

Pedestrian considerations: Limit pedestrian access into rock swale.

Where to Use?

- In areas with wide rights of way.
- Where vegetation growth will be difficult.
- Where soil infiltration rates are high.

Limitations

- Soil infiltration rates will limit use to areas with quickly draining soils if underdrain systems are not utilized.

Design Issues

Standing water: Basin must be designed to drain within 96 hours. When subgrade infiltration rates are slower than 0.5 inches per hour, filtered water is directed toward a stormwater conveyance system or other LID facility via underdrain pipes.

Utilities: Locate rock basin outside of utility corridor.

Maintenance Access: Allow for adequate maintenance access from road. A forebay or pretreatment to remove sediment improves maintainability of basin.

Pedestrian Considerations: Basins will typically be located outside of areas with high pedestrian use. Fence may be required if side slopes or depth exceeds standards.

Rock Basin

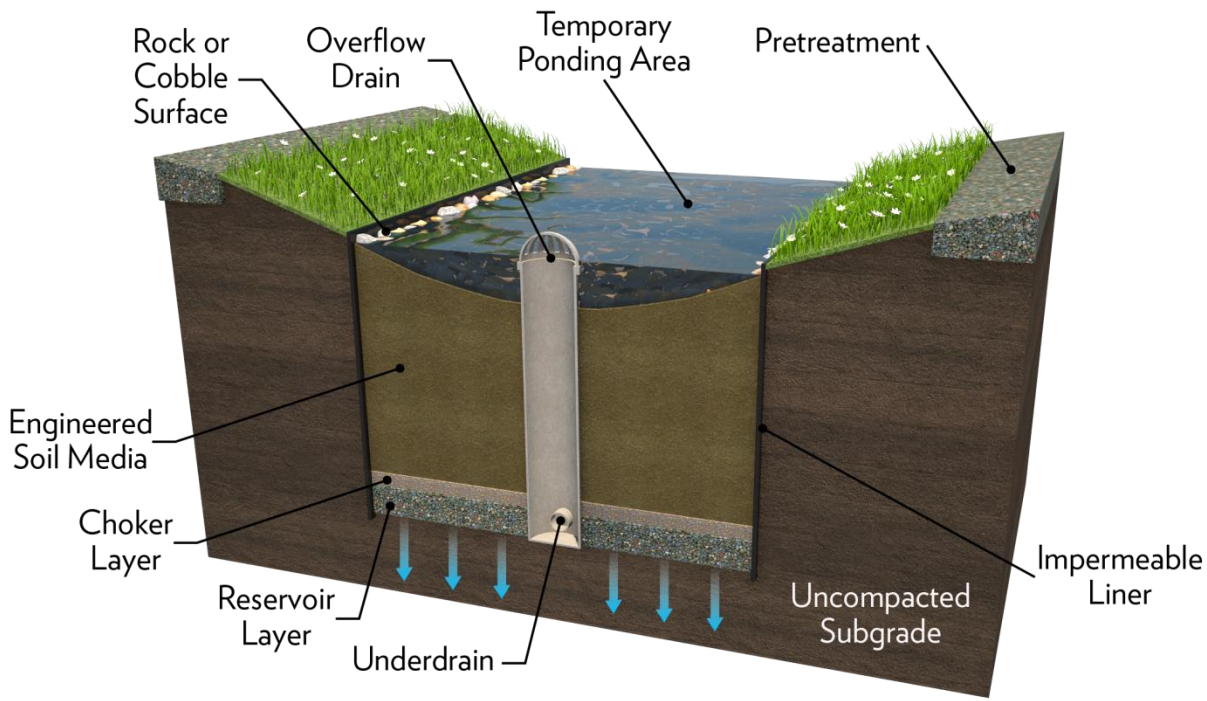

Note: The section above includes the use of an underdrain. As with rain gardens, the subsurface drainage may consist of one of several options that may or may not include an underdrain, choker layer, stone reservoir or permeable/impermeable geotextile liner.

2.6 Types of Permeable Pavement

What is Permeable Pavement

Permeable pavement is an engineered top layer and base layer that allows water to move through it. The goal is to take rainwater as it falls and quickly move it to the lower layers of the system. Stormwater is stored in an underlying stone layer until it infiltrates into the soil below, aiding in groundwater recharge, or releases slowly to the storm drain system. Pollutants are filtered through the pavement and base layers. The terms 'Permeable Concrete Pavers', 'Pervious Concrete', 'Porous Asphalt', and 'Porous Rubber' are industry standard names, but all surfaces are 'permeable' and provide sufficient openings at the surface to allow stormwater to infiltrate.

Permeable Concrete Pavers

Unlike traditional pavers, there are gaps between each paver to allow water to flow between the pavers and into the base layer.

Pervious Concrete

Sands and "fines" are reduced in the concrete mix to allow water to flow through the pavement into a stone bed and eventually the ground.

Types of Permeable Pavement (Continued)

Porous Asphalt

Porous asphalt is very similar to traditional asphalt except that the sands or "fines" are reduced in the mix so water can move through the pavement.

Porous Rubber

Made from recycled rubber and small stones, porous rubber works like pervious concrete, but can be installed over tree roots.

Decomposed Granite (DG) Pathway

Decomposed granite can be used for pathways. It can be installed and compacted to meet ADA handicapped accessibility specifications and criteria. Although highly compacted, the surface has some infiltration capacity.

Boardwalk

Made from wood or composite, boardwalks may be used for pathways. Rain easily passes through the spaces between the boards to the earth below.

Putting it Together

- Permeable Surface: Permeable concrete pavers, pervious concrete, porous asphalt, porous rubber, DG, or boardwalk.
- Bedding Layer: Used for pavers so they can be laid flat.
- Choker Layer: A layer of small rock to prevent fine material from migrating into the reservoir layer.
- Reservoir Layer: Stone to hold excess water until it infiltrates.
- Underdrain: Conveys excess water into drainage system when the reservoir fills.
- Filter Layer/Geotextile: A layer of stone or permeable geotextile to separate the reservoir layer from the soil below and prevent migration of fines into the reservoir layer.
- Impermeable Liner: Prevents infiltration into subgrade or adjacent roadway structural section.
- Uncompacted Subgrade: Existing soil into which stormwater infiltrates.

Permeable Pavement – What's Underneath?

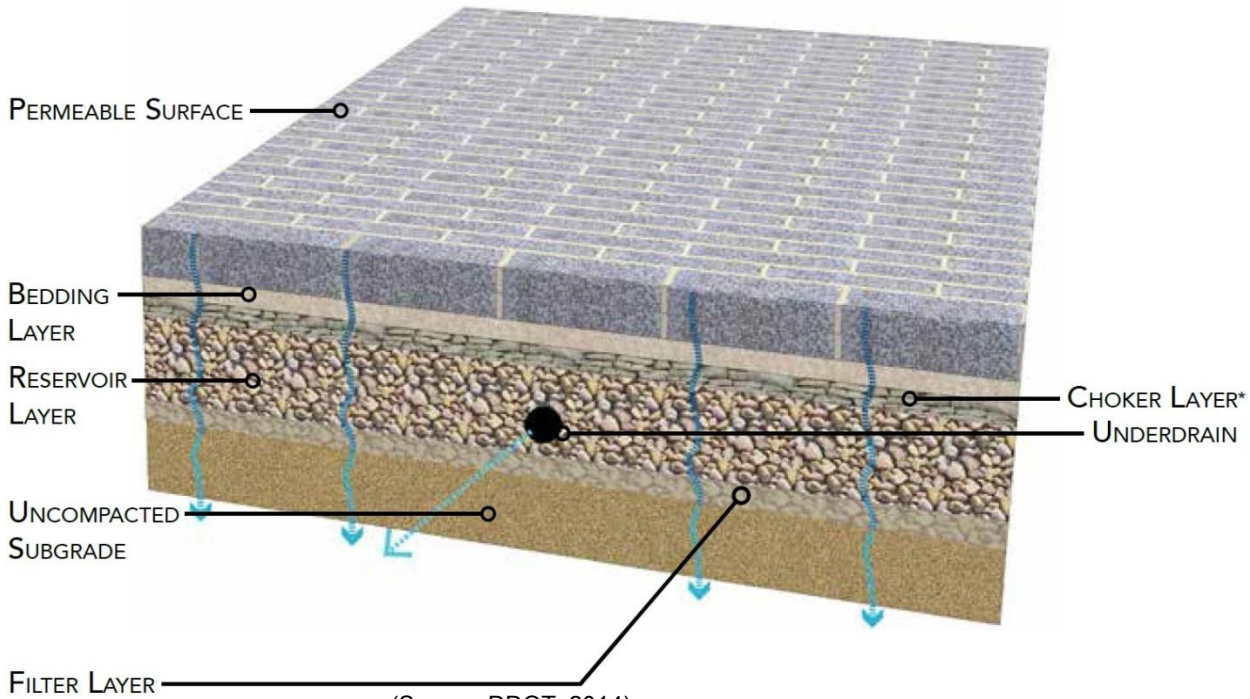

(Source: DDOT, 2014)

*Per Geotechnical Engineer's Recommendations

As with rain gardens and rock gardens, there are multiple options for the subsurface components for permeable pavement including:

- Reservoir layer only with no underdrain
- Reservoir layer with underdrain (shown)
- Reservoir layer with underdrain and impermeable liner

Permeable Pavement Subsurface Design Options

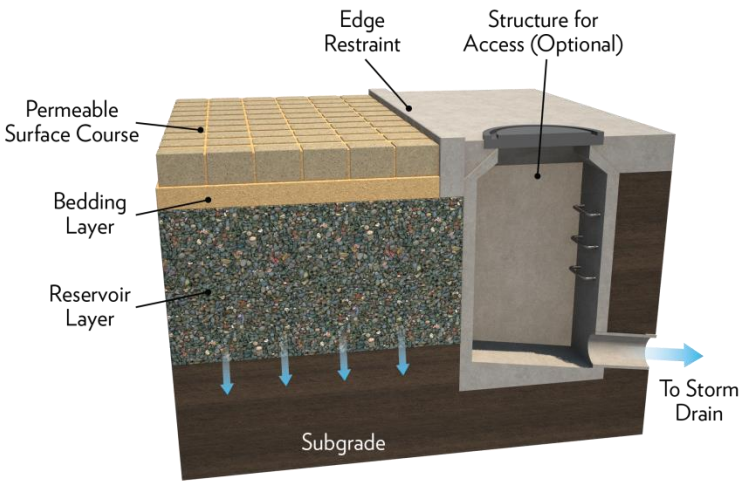

Reservoir layer only with no underdrain

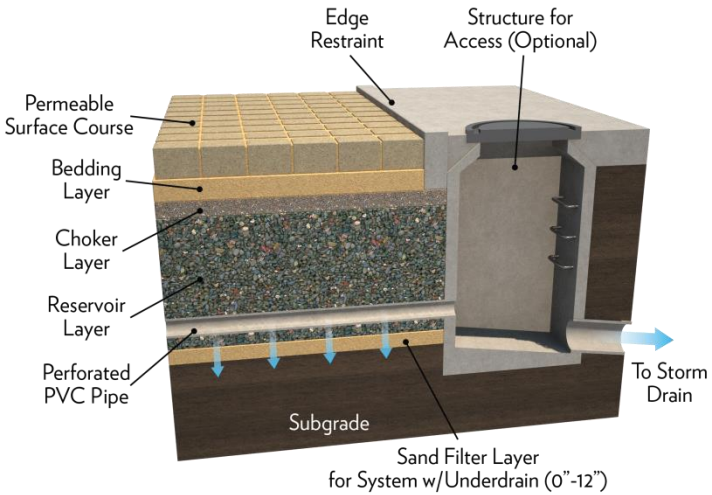

Reservoir layer with underdrain

Where to Use?

- Pedestrian areas
- Pathways
- Parking lanes

Limitations

- Use is limited to areas curb-separated from the traveled way.
- Use in areas with little to no sediment production.

Design Issues

Soil Infiltration and Drainage: Soil infiltration tests must be completed to determine if an underdrain system is required.

Structural Section: A qualified and licensed professional should complete a pavement structural analysis.

Edge Restraints: Provide a concrete transition strip between any permeable and impermeable surface and around the perimeter of paver installations.

Pedestrian Considerations: Provide signage to indicate prohibited activities that cause premature clogging.

Maintenance Access: Provide adequate access for sweeping and/or vacuuming of surface.

Permeable Pavement Subsurface Design Options (Continued)

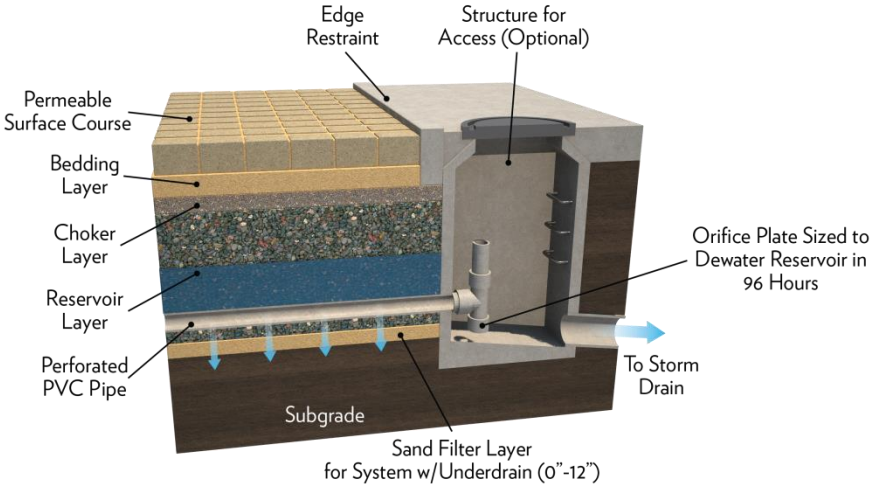

Reservoir layer with upturned underdrain

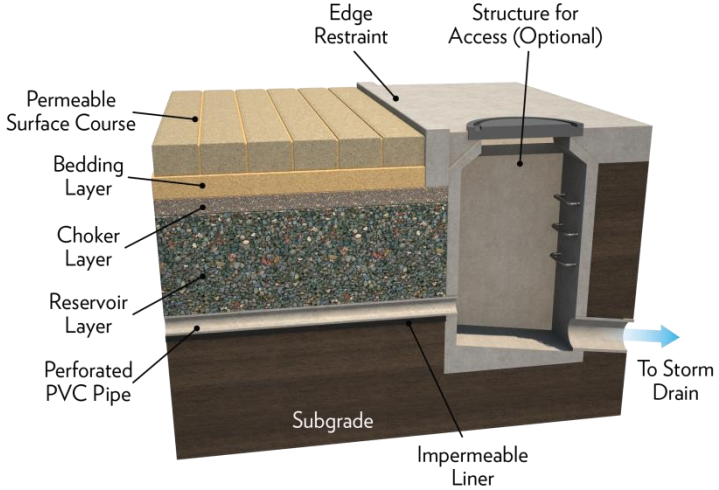

Reservoir layer with underdrain and impermeable liner

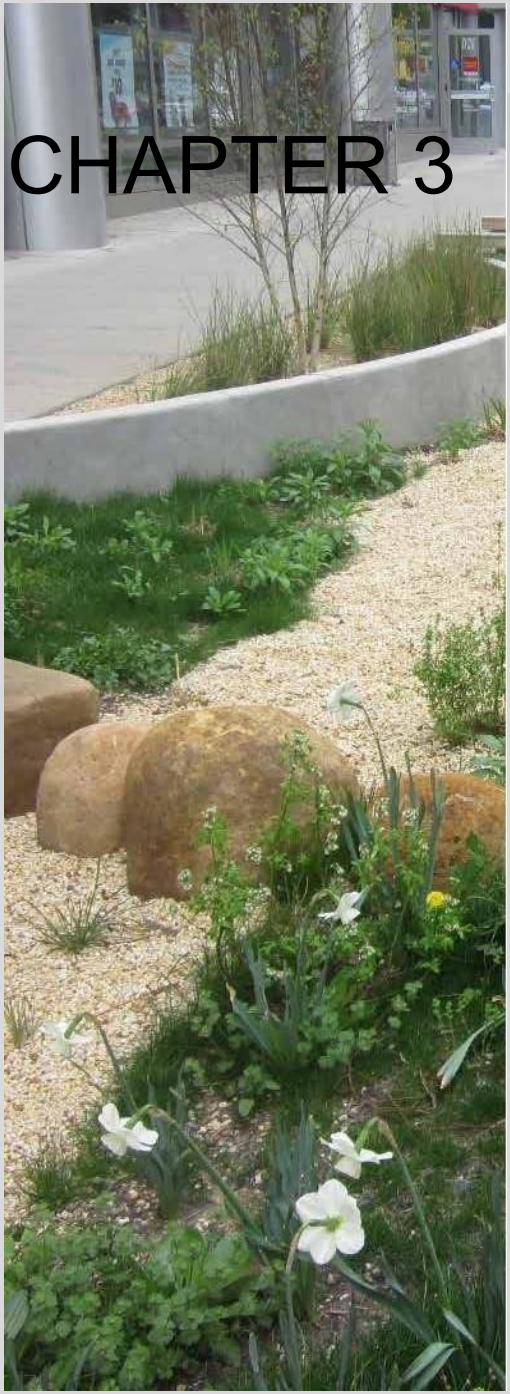

(Source: DDOT, 2014)

CHAPTER 3 Procedures and Design Examples

3.1 Introduction

Implementing Green Infrastructure (GI) and Low Impact Development (LID) within the road right-of-way requires a number of considerations to create an amenity that is attractive while treating stormwater from the surrounding streets and sidewalks.

Implementation of Green Streets features can be approached from evaluating the opportunities within each zone of the right-of-way: median, traveled lane, bike lane, shoulder, parkway, sidewalk/pathway, slopes and drainage easements. Each zone presents different opportunities, benefits, risks and technical design factors for GI and LID implementation to enhance stormwater quality within the right-of-way.

Conducting a comprehensive inventory and assessment of site conditions is the crucial initial step for implementing GI and LID. The County LID Handbook inventory check list can be used to assist with identifying and evaluating a potential site for LID and to produce a list of opportunities and constraints.

The LID concept from the EPA of “slow it down, spread it out, and soak it in” should be at the forefront in the planning stages of project evaluating the implementation of Green Streets design practices to control runoff and enhance water quality.

The following site design principles should be evaluated and implemented to “slow it down, spread it out, and soak it in”:

- Minimize the impervious footprint of the site by constructing streets and sidewalks to the minimum required widths.
- Minimize soil compaction in landscaped areas. Landscape with native or drought-tolerant species.
- Disconnect impervious surfaces by dispersing runoff from impervious surfaces to pervious areas. To be considered ‘disconnected’ impervious areas should be designed to drain to a pervious area at least one-half their size.
- Design and construct Tree wells, rain gardens, rock gardens, and permeable pavements to effectively receive and infiltrate or retain runoff from impervious areas before it discharges to the storm drain or exits the right of way.

When green street design principles are employed over street design techniques that utilize conventional stormwater quality treatment techniques they have the potential to significantly reduce impervious areas and provide potential project cost savings.

Conventional Design Approach

- Impervious median and parking lane
- Rain garden and stormwater vault in parkway

Green Street Design Approach

- Permeable median and parking lane
- Tree wells and rain garden in parkway

Green Street Approach

Direct stormwater runoff from impervious roadway elements to:

- Tree wells, Rain Gardens or Rock Gardens in the median or parkway.
- Permeable pavement surfaces located in the median or parking lane.

Construct sidewalks and trails with permeable pavement or direct runoff to adjacent landscaped area.

Constraints

In no way shall green streets LID features be designed to block sight distance for motorists from adjacent streets and driveways, create obstacles for pedestrians, impede the visibility and maintenance of traffic control devices and signs, and reduce or eliminate clear recovery area and minimum horizontal clearances from fixed objects.

3.2 Design Procedure

Qualification

Under the Municipal Separate Storm Sewer System (MS4) Permit for San Diego Region (Permit [Order No. R9-2013-0001]), the County may make Priority Development Project (PDP) Exemptions for projects redeveloping or retrofitting existing paved roads, streets, and alleys as "EPA Green Streets." This is accomplished under an adopted Green Streets program by the County of San Diego and based in part on the EPA publication "Green Streets: Municipal Handbook, Managing Wet Weather with Green Infrastructure."

Opportunities and Constraints

- Conduct a comprehensive inventory and assessment of site conditions.
- Evaluate each zone of the right-of-way for Green Street implementation opportunties: median, traveled lane, shoulder, parkway, sidewalk/pathway, slopes and drainage easements.
- Evaluate constraints including, but not limited to: right-of-way width, utilities, roadway geometry and slope, site distance, proximity to storm drain, maintenance access, pedestrian and vehicle safety, bike and parking lanes, etc.

Design Capture Volume/Flow Rate

- For volume based features (rain gardens) use the 24-hour, 85th percentile volume. For flow based features (swales) utilize the 24-hour, 85th percentile rainfall intensity (use CASQA method within Caltrans Basin Sizer).

Treatment Train

- Utilize a treatment train approach that connects and combines features to maximize water quality treatment within the Green Street. An example Green Street treatment train approach is provided in Section 3.6.

Documentation

- Document the design criteria, methodology, drainage areas/treatment areas, calculated volumes/flows, BMP selection, and maintenance requirements in the project Stormwater Management Plan and/or Drainage Report.

3.3 MEDIANS

The median presents an opportunity to implement green streets principles by use of Tree wells, rain gardens, rock gardens or permeable pavements. The graphics below illustrate various green streets design concepts that can be utilized within the median.

Roadway before Green Streets

Roadway with depressed median and bulb out planter at intersection

Conventional raised median curb, impermeable surfacing and trees

Green street depressed median with curb cuts and planter/swale

DESIGN ELEMENTS

- Raised median:
  - Plant low water use/drought tolerant trees and landscaping.
  - Install permeable pavement.

- Depressed median: Utilize roadway cross slope to direct stormwater runoff from impervious roadway elements to:
  - Tree wells
  - Planter Boxes
  - Vegetated Swale
  - Rock Swale

DESIGN CONSIDERATIONS

- Vehicle safety
- Median width and length
- Roadway longitudinal and cross slope
- Structural integrity of adjacent traveled way (design to prevent subsurface infiltration or ponding under traveled way)
- Underdrain and overflow devices
- Proximity of storm drain
- Maintenance access
- 'Mid-block' pedestrian crossing potential

Design Elements

- Raised section:
  - Plant low water use/drought tolerant trees and landscaping.
  - Install permeable pavement.

- Depressed section: Utilize roadway cross slope to direct stormwater runoff from impervious roadway elements to:
  - Tree wells
  - Planter boxes
  - Vegetated Swale
  - Rock Swale or Basin

Design Considerations

- Roadway geometrics
- Structural integrity of adjacent traveled way to prevent subsurface infiltration or ponding under traveled way
- Underdrain and overflow devices
- Proximity of storm drain
- Maintenance access

3.4 Intersections

Roundabouts

The design elements and design considerations for roundabouts are similar to medians.

Aerial view of rural intersection before roundabout

Aerial view of constructed roundabout with permeable pavement and rain garden with connection to storm drain

Closeup view of same roundabout

Street view of same roundabout

Bulb-Out at Intersection

The design elements and design considerations for bulb-outs are similar to curb extensions. Bulb-outs provide traffic calming at intersections, increase pedestrian visibility, and decrease cross-walk lengths. Bulb-outs at intersections prevent motorists from parking too close to a cross-walk or from blocking a curb ramp. Motor vehicles parked too close to corners present a safety concern, since they block sight lines, obscure visibility of pedestrians and other vehicles, and make turning difficult for emergency vehicles and trucks. Bulb-outs are only appropriate where there is an on-street parking lane or shoulder and must not extend into bike lanes or travel lanes. The turning requirements of larger vehicles such as fire trucks and school buses require consideration in design.

Bulb-out planter box at intersection

Bulb-out at intersection

Design Elements

- Raised section:
  - Plant low water use/drought tolerant Tree wells and landscaping
  - Install permeable pavement.

- Depressed section: Utilize roadway cross slope to direct stormwater runoff from impervious roadway elements to:
  - Tree wells
  - Planter boxes
  - Vegetated Swale
  - Rock Swale or Basin

Design Considerations

- Appropriate only where there is on-street parking or shoulder
- Roadway geometrics
- Structural integrity of adjacent traveled way to prevent subsurface infiltration or ponding under traveled way
- Underdrain and overflow devices
- Proximity of storm drain
- Maintenance access
- Turning requirements for large vehicles
- Bike lanes

Design Elements

- Traveled Way and Bike Lane:
  - Design lane widths to minimum allowable.
- Shoulder/Parking Lane:
  - Utilize permeable pavement with edge restraint at interface with traveled way

Design Considerations

- Permeable pavement not acceptable in traveled way, bike lane, and parkway
- Structural section design to handle vehicle loading
- Shoulder utilization (with or without parking, temporary use during lane closures)
- Roadway geometrics
- Hydrologic design requirements (stone reservoir depth and underdrain requirements)
- Design to maintain structural integrity of adjacent traveled way with edge restraints and prevention of infiltration beneath traveled way section
- Interrupt permeable pavement at intersections
- Surrounding land use and sediment sources
- Long term maintenance
- Pedestrian safety
- Maintenance access

3.5 Traveled Way, Bike Lane, and Shoulder

Permeable Pavement

The use of permeable pavements within the traveled way and bike lanes of County maintained roads is not currently permitted. However, their use may be considered for low volume driving lanes in parking lots, private streets, alleys, and fire access roads. The use of permeable pavement in the shoulder/parking lane should be evaluated based upon the following design considerations listed to the left.

Conventional street with bike lane and shoulder

Green street with permeable pavement in parking lane

Curb Extensions

Curb extensions reduce overall street dimensions and provide traffic calming. Among other benefits, curb extensions provide added space for rain gardens.

Curb extensions shall never encroach upon the traveled way or bike lanes. When existing tree roots are damaging adjacent curb, gutter, or pavement curb extensions provide an excellent opportunity to preserve the tree and provide green infrastructure.

Careful survey of street parking impacts should be considered when locating curb extensions.

Curb extension with planter box

Curb extenstion with planter box

Design Elements

- Low water use/drought tolerant trees and landscaping
- Permeable pavement
- Planter boxes

Design Considerations

- Roadway geometrics
- Structural integrity of adjacent traveled way to prevent subsurface infiltration or ponding under traveled way
- Underdrain and overflow devices
- Sight distance at intersection
- Proximity of storm drain
- Utility conflicts
- Pedestrian mobility aspects
- Maintenance access
- Parking requirements

PARKWAY DESIGN ELEMENTS

- Landscape area:
  - Tree wells
  - Planter boxes,
  - Curb extensions
  - Bulb outs at intersections
  - Swales.
- Sidewalk or trail:
  - Drain to adjacent landscaping
  - Drain to green street LID practice
  - Permeable pavement
- Other areas:
  - Filter Strip
  - Rock basin

3.6 PARKWAY

The parkway including the tree space, planting strip, sidewalk, pathway, and other areas has numerous opportunities for Green Street implementation.

TREE WELLS

Existing Road

Conceptual desgin with Tree wells, and permeable sidewalk

Existing Road

Reconstructed Road with Trees and planter boxes

Planter Boxes

Before and After Concept

Road retrofit with planter boxes and trees

Planter Box with step out zone

Planter box with step out zone

Parkway Design Considerations

- Roadway classification and parkway width
- Location (urban or rural setting)
- Tree type and spacing requirements
- Sidewalk or trail width requirements
- Streetside parking requirements
- Roadway and parkway horizontal and vertical geometrics (curves and longitudinal slope)
- Pedestrian mobility and safety
- Maintenance access
- Interface with driveways
- Utilities and appurtenant structure locations
- Hydrologic design requirements
- Proximity of storm drain systems
- Structural integrity of adjacent traveled way (utilize edge restraints and prevent infiltration beneath roadway section)
- Low water use/drought tolerant Trees and landscaping

Design Elements

- Low water use/drought tolerant landscaping
- Rock
- Curb cuts and outlet design
- Energy dissipation
- Check dams

Design Considerations

- Roadway geometrics
- Structural integrity of adjacent traveled way to prevent subsurface infiltration or ponding under traveled way
- Underdrain and overflow devices
- Proximity of storm drain
- Pedestrian mobility aspects
- Maintenance access

Swales

Swale adjacent to road

Rock swale adjacent to road

Rock swale adjacent to road

Swale adjacent to road

Sidewalks and Pathways

Permeable pavement sidewalk with rain garden in curb extension

DG pathway with rock swale

Pervious concrete sidewalk

Porous asphalt pathway

Design Elements

- Drain to adjacent landscaping or adjacent LID facility
- Permeable pavement

Design Considerations

- Sidewalk width and ADA requirements
- Public safety
- Pedestrian mobility aspects
- Maintenance access

Design Elements

- Low water use/drought tolerant landscaping
- Swales
- Rock basins
- Vegetated filter strips

Design Considerations

- Available space
- Vehicle and public safety
- Structural integrity of adjacent traveled way to prevent subsurface infiltration or ponding under traveled way
- Underdrain and overflow devices
- Proximity of storm drain
- Maintenance access

Other Parkway Areas

Swale outside of sidewalk and road

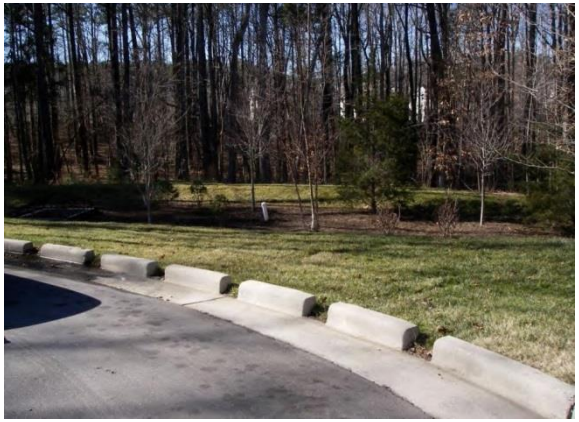

Curb cuts with filter strip

Rock garden

Rock swale

3.6 PUTTING IT ALL TOGETHER

This graphic shows a treatment train concept as an example of how several different techniques may be combined for Green Street implementation.

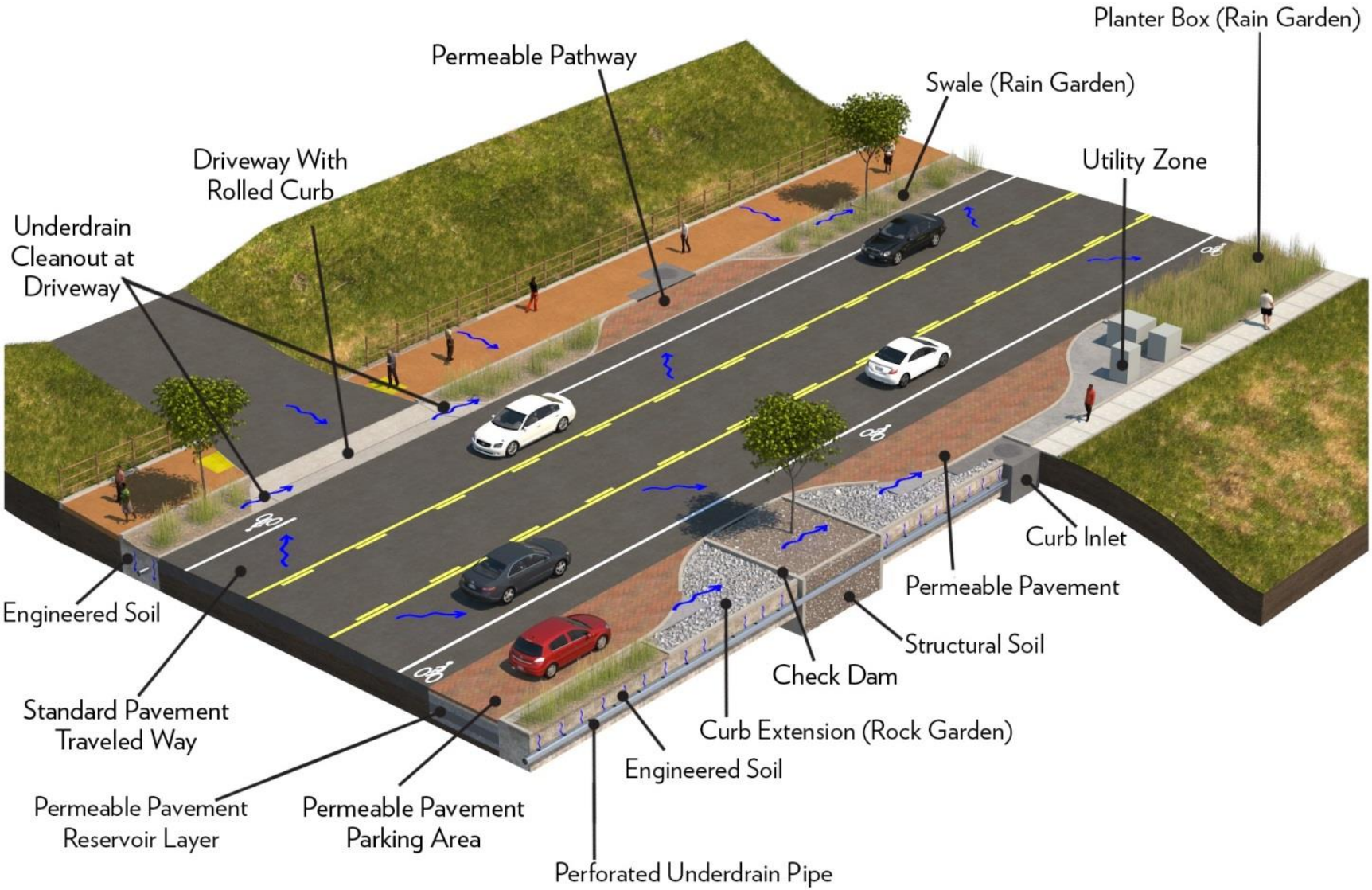

CHAPTER 4 Implementing Green Streets

2.7
2.8
2.9

4.1 Design and Construction

The goal of the County of San Diego (the County) Low Impact Development (LID) Program is to protect stormwater quality by preserving and simulating natural hydrologic functions through the use of stormwater planning and management techniques on a project site. Both public and private projects constructing in the ROW are required to retain stormwater to the maximum extent practicable. Designers must examine all uses of public space and place stormwater management where space and use allows.

DPW is installing green infrastructure as part of regulated construction projects and retrofit projects to reduce stormwater runoff in more areas of the County. Green Street projects utilize green infrastructure techniques and may be constructed independently to improve watershed health, or as a part of other infrastructure improvement projects.

These Green Street Guidelines are a planning tool intended to assist project engineers with identifying and selecting suitable Best Management Practices (BMPs) for their respective Green Infrastructure projects. Technical standards, including drawings, specifications, maintenance schedule, and plant list, can be found in the Green Street Standards document.

4.2 Maintenance

Implementing green infrastructure and Low Impact Development (LID) practices requires maintenance to keep them attractive and functioning. Maintenance levels of care should be considered during the design phase and plants selected from the Green Streets Plant List according to the following levels:

- Low level of care: Annual maintenance; no irrigation
- Medium level of care: Quarterly maintenance; some water available
- High level of care: Monthly maintenance; site is potentially irrigated

San Diego County DPW is typically responsible for maintaining publicly-installed green infrastructure and LID facilities within their right-of-way. The final determination of maintenance responsibility is determined during project review. Private installations must have a maintenance covenant from the owner. Residents can help with maintenance by removing trash and weeds. Refer to the Green Streets Maintenance Schedule for frequency and detail of maintenance.

Type of Maintenance	Rain Garden or Rock Garden	Permeable Pavement	Tree Space
Inspect after storms	•	•	
Remove trash/sediment/leaves	•	•	•
Clean inlets/outlets	•		
Adjust mulch and/or stone	•		
Water for establishment	•		•
Weed/remove invasive species	•		•
Prune (as needed)	•		•
Replace mulch (3” depth)	•		•
Street sweeper/vacuum (as needed)		•	

4.3 Funding

Funding mechanisms for Green Streets maintenance may include:

- Community Service Districts
- Home Owner’s Associations or other private sources

REFERENCES

Central Coast Low Impact Development Initiative, 2015:
http://www.centralcoastlidi.org/resources.php

City of Los Angeles – Green Streets and Green Alleys Design Guidelines Standards, 2009:
nacto.org/docs/usdg/green_streets_and_green_alleys_la.pdf

County of San Diego – Low Impact Development Handbook, 2014:
sandiegocounty.gov/content/sdc/dpw/watersheds/susmp/lid

County of San Diego – Standard Urban Stormwater Mitigation Plan Requirements for Development Applications, 2012:
sandiegocounty.gov/dpw/watersheds/susmp/susmp

DDOT – Greening DC Streets, 2014:
ddot.dc.gov/GreenInfrastructure

Low Impact Development Center, Inc. - Low Impact Development Manual for Southern California, 2010:
https://www.casqa.org/resources/lid/socal-lid-manual

Montgomery County, MD - Environmental Site Design Implementation in Montgomery County, Maryland: Image Library,2011:
http://www.montgomeryplanning.org/environment/documents/esd_implementation_graphics_201108.pdf

K.3 Green Streets Design Criteria

This page was left intentionally blank.

Green Streets
Design Criteria

County of San Diego
Department of Public Works

January 2016

Table of Contents

SECTION 1 INTRODUCTION *1*

SECTION 2 GENERAL DEFINITIONS *3*

SECTION 3 GENERAL POLICY *6*

3.1 PLANS TO BE APPROVED BY DIRECTOR, DEPARTMENT OF PUBLIC WORKS **6**

3.1.1 Stormwater Quality Management Plan (SQWMP) **6**

3.1.2 Landscape and Planting Plans **6**

3.1.3 Project Improvement Plans **7**

SECTION 4 REQUIRED PUBLIC ROAD RIGHTS-OF-WAY IMPROVEMENTS *8*

4.2 ROAD CROSS SECTIONS **8**

4.3 GENERAL NOTES **8**

SECTION 5 REQUIRED ROAD IMPROVEMENTS *9*

5.1 CURBS AND DIKES **9**

5.2 SIDEWALKS **9**

5.4 DRIVEWAYS **9**

5.6 TRAFFIC SIGNALS, REGULATORY, AND WARNING SIGNS **9**

5.10 MEDIANS **9**

5.11 DRAINAGE IMPROVEMENTS **9**

5.11.1. Green Streets Facilities **9**

SECTION 6 DESIGN PRINCIPLES *18*

6.4 PAVEMENT AND STRUCTURAL SECTION **18**

6.4.1 Green Street Surfacing **18**

6.6 UTILITY PLACEMENT **18**

6.6.1 Utility Clearances at LID Facilities **18**

6.7 DRIVEWAYS **19**

6.9 GREEN STREETS LANDSCAPE DESIGN CRITERIA **19**

6.9.1 Tree Space Design **19**

6.9.2 Access and Safety Barriers **22**

6.9.3 Structural Support **23**

6.9.4 Planting Guidance for Vegetated Stormwater Systems **23**

SECTION 9 EXCEPTIONS ***24***

9.1 EXCEPTION PROCESSING PROCEDURES **24**

9.2 FLEXIBILITY IN COUNTY ROAD DESIGN **24**

SECTION 1

INTRODUCTION

Section 1.1 INTRODUCTION

These design criteria are for use by individuals who as a result of the land development process desire to have the County accept improvements using green infrastructure strategies into the County's system of maintained public roads.

Section 1.2 PURPOSE

The purpose of this document is to provide for the regulation of improvements using green infrastructure strategies to be dedicated to the public and accepted by the County as a result of the land development process. The design criteria are intended to keep the operating cost of maintaining green infrastructure at a reasonable level at the same time provide for the service and protection of the public.

When these design criteria are applied to a project to the size and extent specified in section 2.2 of the County of San Diego BMP Design Manual, that project shall be deemed to be designed and constructed in accordance with the USEPA Green Streets Guidance (Managing Wet Weather with Green Infrastructure, USEPA, 2008) as long as these design criteria are as protective of water quality as the USEPA Green Streets Guidance. Green Streets projects are subject to County review and approval. Green Streets Design Criteria in this document build upon the Public Road Standards and Flexibility in County Road Design (FCRD) to provide the minimum requirements and procedures necessary to implement Green Streets design. The Green Streets Design Criteria are to be used in addition to the Public Road Standards for the County of San Diego. The Design Standard Drawings, minimum requirements, and procedures stated herein may be revised or amended from time to time, but only to the extent specified under the supplemental specifications or special provision included in a specific contract.

References by date and title shall be made to these Design Criteria with construction plans or other contract documents as notification of their application to those documents.

Section 1.3 BACKGROUND

The Public Road Standards were created to provide for the regulation of right of way improvements to be dedicated to the public and accepted by the County as a result of the land development process. The Public Road Standards are intended to keep the operating cost of maintaining public facilities at a reasonable level and at the same time provide for the service and protection of the public.

Section 3.2 of the Public Road Standards states that: *"Where the requirements for any subdivision major use permit, rezone, or other improvements are not covered by these Standards, such requirements shall be specified by the Planning Commission, or Board of Supervisors, or, if not so specified, by the Director."*

Section 9.2 of the Public Road Standards references the FCRD document which is a companion to the Public Road Standards: *"Flexibility is available in the implementation of the County Public Road Standards so that specific road designs may be developed that are more suitable for the context in which they are used."*

FCRD is not intended to supersede existing County of San Diego Public Road Standards, procedures or practices, but it is a compilation of possible options that under appropriate conditions may be used to enhance established traffic engineering and design practices, policies and standards. The purpose of the FCRD is to provide additional information and guidance regarding designing County public roads that incorporate community values, provide adequate emergency access and are safe, efficient, effective mechanisms for the movement of people and goods. Additionally, FCRD encourages a comprehensive design process, involving the public and incorporating a multi-disciplinary design approach early and throughout the design process.

Furthermore, the FCRD states that: *"Implementation or construction of County road improvement projects often result in significant environmental impacts. These include impacts to sensitive environmental features such as biological habitat, structures or features of community interest, residential buildings or areas. These impacts may be avoided or reduced through the selection of alternative designs. Alternative design features may also be selected to enhance or preserve environmental or cultural resources. Design features may also be provided to reduce or filter storm water runoff to assist in achieving low impact development goals."*

SECTION 2
GENERAL DEFINITIONS

Section 2.1 GENERAL DEFINITIONS

In addition to the general definitions included in the Public Road Standards, the following definitions shall be applicable to these Green Streets Design Criteria.

1. "CHECK DAM" is a small dam constructed across a rain garden, curb-extension, channel, swale, etc. of storm water facilities that controls (slows) the runoff velocity, reduces erosion, promotes sediment deposition, and increases infiltration.

2. "CURB CUT" is a part of curb that has been removed to allow an unobstructed pathway from the street level and is often used to redirect water from traditional drainage ways to a Stormwater BMP.

3. "CURB EXTENSION" is a traffic calming strategy that provides a widening of the sidewalk and a narrowing of the roadway, which allows space for Rain Garden or Rock Garden within the extension.

4. "DETENTION" and "RETENTION"
   4a. "DETENTION" is a technique that stormwater runoff is directed, held (detained) for a period of time into a depressed area or structure (detention basin or pond) and slowly released to a surface water body. The structure is not designed to permanently contain water. It can help improve water quality by allowing suspended solids to settle over a period of time. The temporary storage of storm runoff water also decreases downstream peak flow rates which can reduced potential flooding.

   4b. "RETENTION" is a technique that holds or retains runoff water, allowing it to infiltrate, evaporate, or/and emergency overflow to be used on-site in order to reduce off-site transportation of runoff and improve water quality.

5. "ENGINEERED SOIL" is soil or growing media that has been formulated with specific components for specific purpose or application; For example, engineered soil media for rain garden may contain native soil from the site mixed with compost and sand to improve drainage, infiltration, and plant growth.

6. "FILTER FABRIC" is textile of relatively small mesh or pore size that is used to allow water to pass through while keeping sediment out (permeable), or prevent both runoff and sediment from passing through (impermeable).

7. “FILTER STRIP” Filter strip is a vegetated area used to reduce stormwater runoff velocity, filter out pollutants, and enhance infiltration. Filter strips are often used around the perimeter of a rain garden, at the edge of a roadway, or along a stream channel. Vegetated filter strips may also be referred to as buffer strips. Filter strips are often used at the edge of a roadway.

8. “FILTRATION” and “INFILTRATION”
   8a. “FILTRATION” is the process that treats stormwater runoff by capturing and passing the water volume through a bed of sand, other soil material, or other acceptable treatment media to remove pollutants from the water. Filtering practices differ from infiltration practices in that the stormwater filters through an engineered filter media, rather than native soil. However, filtering practices can be constructed in combination with infiltration practices, where the filtered water is discharged into the ground beneath the BMP. Alternatively, filters can be designed with an underdrain to collect the treated water and convey it to discharge. Underdrained filters can be lined to isolate the filters from the adjacent soil material or underlying groundwater.

   8b. “INFILTRATION” is the process of water moving into the native soil from the soil surface to the groundwater storage.

9. “GREEN INFRASTRUCTURE is an approach to stormwater and flood management that protects, restores, and mimics the natural water cycle. Environmental benefits of green infrastructure include improved water quality, enriched habitats, reduced heat-island effect, and recharged water tables.

10. “GREEN STREET” is a street right-of-way that uses a variety of low impact development facilities to manage stormwater runoff close to its source. Green infrastructure includes the facilities that compose a green street.

11. “HIGH VOLUME PEDESTRIAN AREA” is an area with relatively high pedestrian-oriented land uses, which may include the following: Civic (government and public facility buildings), Schools, Commercial, Higher Density Residential (apartment complexes, condominiums, town homes, or detached single-family homes on small lots), Parks and Open Space (with connectivity to one of the above land use elements).

12. “IMPERVIOUS SURFACE” is any material that prevents or substantially reduces infiltration of water into the soil.

13. “LOW IMPACT DEVELOPMENT” is a stormwater management and land development strategy that emphasizes conservation and the use of on-site natural features integrated with

engineered, small-scale hydrologic controls to more closely reflect pre-development hydrologic functions.

14. “LOW VOLUME PEDESTRIAN AREA” is an area with relatively low pedestrian oriented land uses such as low density housing.

15. “OFFLINE FACILITIES” are systems that provide stormwater treatment away from the flowpath of the runoff, then return the treated flow to the conveyance system.

16. “ONLINE FACILITIES” are systems that provide stormwater control within the flowpath of the runoff.

17. “PERVIOUS” refers to a soil or material that allows the passage of water or other liquid.

18. “PERMEABLE PAVEMENT” is a paving material that has sufficient interconnected voids to provide a high rate of permeability. Permeable pavement is inclusive of permeable interlocking concrete pavers, pervious concrete, porous asphalt, and porous rubber. These terms are reflective of the industry standard nomenclature.

19. “RAIN GARDEN” is a shallow landscape depression designed to capture and treat stormwater runoff. The plants and soil in a rain garden facilitate infiltration and pollutant removal. Rain Gardens are designed to hold water for a short period of time following a storm event. Water collected in a Rain Garden will infiltrate, evaporate, or overflow as surface runoff.

20. “SPLASH PAD” is a stormwater flow control device designed to diffuse and decrease the velocity of the inflow water into a stormwater facility to provide erosion protection and to trap sediments and debris; splash pad is also required at outfall points of the stormwater facility.

21. “STREET TREE” is a tree growing in the public street right-of-way.

22. “STRUCTURAL SOIL” is a designed medium which can meet or exceed pavement design and installation requirements while remaining root penetrable and supportive of tree growth, such as CU-Structural Soil™.

23. “SWALE” is an open drainage channel that has been explicitly designed to detain, evaporate, and/or infiltrate runoff associated with a storm event. A swale collects and filters urban stormwater and may include grass and sand filters, loamy soils, mulch, shallow ponding, native trees and shrubs, or rock. Swales typically have some longitudinal slope.
24. tree well

SECTION 3
GENERAL POLICY

Under the Municipal Separate Storm Sewer System (MS4) permit for San Diego Region (Permit [Order No. R9-2013-0001]), the County is allowed to make Priority Development Project (PDP) Exemptions for roadway type projects by redeveloping or retrofitting existing paved roads, streets, and alleys as "EPA Green Streets" under an adopted program by the County and based in part on the EPA publication *"Green Streets: Municipal Handbook, Managing Wet Weather with Green Infrastructure."*

The Green Streets program incorporates a wide variety of Low Impact Development (LID) design elements including, but not limited to, tree wells, rain gardens, rock gardens, pervious pavements, and removal of unnecessary pavement. Features implemented as part of the Green Streets program are designed to meet the treatment control requirements of Section 2.2 and Appendix 'B' of the County's BMP Design Manual, but are not necessarily designed to meet the flow control requirements of the County's Hydromodification Management Plan (HMP) and are not categorized as TCBMPs.

Section 3.1 PLANS TO BE APPROVED BY DIRECTOR, DEPARTMENT OF PUBLIC WORKS

In addition to the requirements set forth in the Public Road Standards, the Developer shall cause to be prepared by a California Registered Civil Engineer, in accordance with these Green Street design criteria, plans, profiles, specifications, and calculations for the proposed green infrastructure improvements as follows:

3.1.1 Storm Water Quality Management Plan (SWQMP)

A Storm Water Quality Management Plan shall be prepared to meet Storm Water Pollutant Control Requirements as described in Chapter 2.2 and Chapter 5 of the County BMP Design Manual.

3.1.2 Landscape and Irrigation Plans

Landscape and Irrigation plans shall comply with the most current version of the County of San Diego Water Efficient Landscape Design Manual. Plants should be selected based upon LID feature drawdown times. Only plants tolerant of saturated soil conditions should be planted in zones subject to frequent inundation. Details for planting, structural soils, engineered soil media shall be specified in the SWQMP and shall correlate exactly with the plan. Clear recovery zones and horizontal sight distances associated with travel lanes shall be plotted on the Landscape and Irrigation plans. Additional information for tree well design shall include:

- The type, locations and dimensions of all tree wells.
- Clearly depict the locations, dimensions, open and covered soil area, and soil volume method for each tree.
- Details shall be provided which illustrate the overall size, depth, soil composition, and drainage of the planting space.
- Calculations of soil rooting volume and maximum tree canopy supported.

3.1.3 Project Improvement Plans

Separate from the conventional plans Storm Water Management Plan set shall be included in the project improvement plans. Storm water management plans will include

- Drainage management areas
- Land uses and cover types
- Peak flow rates for Q100 design storm

Plans with the type, locations and dimensions of all stormwater management facilities with key elevations depicted as follows:

- Inflow elevation
- Outflow elevation (for online facilities)
- Invert elevation of rain garden surface
- Top of ponding elevation
- Bottom of reservoir/stone layer (bottom of storage)
- If applicable, underdrain connection point with tie-in invert elevation, and
- Sections and profiles to show any steps, underdrains, and utility lines through the facility.

SECTION 4

REQUIRED PUBLIC ROAD RIGHTS-OF-WAY IMPROVEMENTS

Section 4.2 ROAD CROSS SECTIONS

The data specified in Tables 2A and 2B of the Public Road Standards are minimums and are subject to modification for Green Street implementation with the approval of the Director.

Section 4.3 GENERAL NOTES

A. Additional right-of-way width, beyond that specified in Tables 2A and 2B of the Public Road Standards may be required to accommodate Green Street features or improvements.

SECTION 5
REQUIRED ROAD IMPROVEMENTS

Section 5.1 CURBS AND DIKES

Per approval of the Director, flush curb may also be considered for a Green Street to accommodate drainage into rain gardens, rock gardens, swales, and filter strips.

Section 5.2 SIDEWALKS

Sidewalks constructed with permeable pavement conforming to the Green Street Standard Drawings may also be considered for construction.

Section 5.4 DRIVEWAYS

Per the approval of the Director, residential and commercial driveway aprons in the public right may be constructed of permeable pavements but will remain the responsibility of the owner of the property being served.

Section 5.6 TRAFFIC SIGNALS, REGULATORY, AND WARNING SIGNS

Signage for education and public awareness of Green Street LID facilities shall be included in the design at locations specified by the Director as part of the Green Street improvement.

Section 5.10 MEDIANS

Per approval of the Director, tree wells, permeable pavement, rain gardens, or rock gardens may be used rather than conventional concrete median curb and gutter drainage provided the requirements of the Hydraulic Design Manual are met. Tree wells, permeable pavement, rain gardens, and rock gardens shall conform to the Green Street Standard Drawings.

Section 5.11 DRAINAGE IMPROVEMENTS

5.11.1. Green Streets Facilities

5.11.1.1 General

Green Streets facilities to be used in the public ROW may include tree wells, rain gardens, rock gardens, or permeable pavement. Other Green Streets facilities may be used with approval by the Director.

5.11.1.2 Design Storm

Green Streets roadway drainage design shall comply with the most current versions of the County of San Diego Hydrology Manual and the Hydraulic Design Manual. Green Streets LID BMP facilities shall be sized to convey the 100 year storm within the public right of way.

5.11.1.3 Design Guidance

Choice of green streets stormwater facilities should be based on the context of the surrounding streetscape. In addition to the benefits to stormwater quality and quantity, multi-purpose design of stormwater facilities can add aesthetic value to the County by providing varied landscaping, visually appealing pavement design and enhanced community spaces on streets. They can also be combined with traffic calming features.

The process for selecting and designing LID facilities in a roadway project begins with site analysis:

- Address the street layout – The dimensions of the travel lanes, location of medians, islands and buffer strips, and all elements related to the functionality of the roadway will be established in the design plan.

- Identify clear recovery zones and sight distance corridors – Tree and shrub plantings should never compromise public safety. Trees with an expected mature diameter of 4" or larger at chest height shall not be planted within clear recovery zones. Sight distance through horizontal curves, at intersections, and driveways shall not contain vegetation that will obstruct sight

- Include other transportation modes – The requirements for pedestrian traffic, cyclists, mass transit, and other possible modes are incorporated into the right of way as well.

- Choose stormwater locations and types – implement stormwater facilities that can capture and treat the runoff from impervious surfaces prior to entering the storm drain system. Consider space between curb and sidewalk, behind sidewalk, in channelized islands and medians for vegetative practices. Consider parking lanes, alleys, sidewalks, and other roadways for permeable pavement. Maximize tree well locations. LID facilities should be placed to maximize volume capture. Adjacent LID and BMP facilities should be closely reviewed to ensure they will receive stormwater flow from the design storm.

5.11.1.4 Green Street Facilities

- Green Street Facilities shall be placed within vegetated areas of the public ROW and landscaped with a selection of plants consistent with the Water Efficient Landscape Design Manual and LID Handbook. Possible areas for Green Street Facilities include tree well, parking lanes, curb extensions, intersection triangles, open areas, swales, and areas adjacent to the sidewalk. Green Street Facility design shall comply with the Green Streets Guidelines

and Standard Plans.

5.11.1.4.1 Types of Green Street Facilities

- Tree well:
- Curb Extension: This type is generally placed in locations where a new curb is constructed into the parking lane to create an opportunity for a Rain Garden, which may or may not incorporate a portion of the tree well. In most cases, curb extensions will be designed as online facilities.

- Streetscape Planter: This type is typically a small-scale Green Street Facility, often located between the curb and sidewalk. These facilities may include tree, shrub and groundcover plantings. In most cases, Streetscape planters will be designed as offline facilities. The facility may need to incorporate fencing or a barrier around the perimeter for pedestrian safety. Refer to Section 5.11.1.5.6 for more information on safety and access.

- Swale: This facility type is includes drainage channels or linear Rock Garden basin adjacent to either the roadway or the sidewalk, typically vegetated with trees, shrubs, or groundcovers. Swales may be designed to convey or retain stormwater. Swales adjacent to roadways that receive stormwater runoff from roadway surfaces shall be designed according to the requirements of the Hydraulic Design Manual as open channels, with the exception of freeboard requirements. Swales without curbs are online facilities. Vegetation within the swale should be sufficient to visually depict the slope and depression within the swale.

5.11.1.5.2 Green Street Facilities Cross Section

Materials used in the various Green Street Facilities shall be in accordance with the Green Streets Specifications. Green Street Facilities shall be designed per the Green Street Standard Drawings.
Impermeable PVC liners are required in Green Street Facilities as follows:

- Facilities within 10 feet of a structure (e.g. an existing building) shall be lined on the side adjacent to the structure.
- Facilities within 5 feet of the roadway face of curb shall be lined on the side adjacent to the roadway.
- In areas where infiltration is not permitted facilities shall be lined on all sides and subsurface drainage is required.

5.11.1.5.4 Allowable Ponding Depths

Allowable ponding depth in Green Street Facilities shall be selected based on the adjacent land use, and the associated need for barriers around the facilities as described in Section 5.11.1.5.6 on Safety & Access.

- The maximum allowed ponding depth in Green Street Facilities is 18 inches.
- Green Street Facilities in high-volume pedestrian and residential areas will typically have a 6 inch maximum ponding depth. The ponding depth may vary based on slope conditions.

5.11.1.5.5 Subsurface Drainage

- A minimum of one clean-out is required for basins and curb extensions, and shall be shown on design plans. For other Green Street facilities, a clean-out shall be provided within 10 feet of the underdrain connection to the catch basin or manhole.
- Connect underdrains to catch basins, manholes, or direct connect to storm sewer pipe. Connection to catch basin is generally the most cost effective option. When directly connected to the storm drain, place a backflow preventer valve on the underdrain connection.
- For Green Street Facilities without underdrains, observation wells are required and shall be shown on the design plans. The maximum spacing of observation wells shall be 100 feet.
- Use curb openings with depressed gutters to convey runoff to Green Street Facilities adjacent curbed roadways. Space the openings to deliver the design capture volume to the facility:
  - Convert the flow associated with the design capture volume for which the BMP is being designed into peak discharge.
  - Space the curb opening to achieve 100-percent interception of the DCV. Multiple curb openings can be used for each facility to deliver the required volume.
- Curb cuts across sidewalks require trench covers.
- Check dams in Green Street Facilities may be necessary to allow ponding volume, achieve the storage volume, to slow velocities, or both. Check dams will be placed in sloped facilities at intervals to maintain ponding depth and facility depth within allowable limits.
- Pre-treatment devices are required to trap coarse sediment and dissipate energy. Applicable choices include:
  - Green Street Facilities in Open Area: or Vegetated filter strip.
  - Curb Extensions: Splash pad as depicted in standard drawings.
  - Streetscape Planters: /Splash pad adjacent to curb cut. Overflow devices are required for online facilities and for off-line facilities where the lowest adjacent top of curb or sidewalk is equal to or lower than the inflow point elevation. Typical overflow devices include outflow curb openings to gutter, and overflow structures. Size overflow devices

for online Green Street Facilities to convey the 10 year storm. Where in the roadway, the overflow device shall be sized to meet the roadway drainage requirements listed din Section 2.2.1 of the Hydraulic Design Manual. For online facilities, provide a minimum of 3-inches of freeboard from overflow structure to overtopping elevation.

- Side slopes of swales shall be designed to prevent erosion based on anticipated stormwater flow rates. Temporary soil stabilization and erosion control measures shall be used to stabilize soils until plant materials have been established.

5.11.1.5.6 Safety and Access

- Edge conditions around green street facilities adjacent to pedestrian areas may be sloped or with a vertical drop.
  - Railings are required around Green Street Facilities with a vertical drop adjacent to sidewalks in high-volume pedestrian areas.
    - Top of railing shall be 18” above sidewalk, with vertical and/or horizontal member spacing which meets ADA detection requirements for visually impaired pedestrians.
  - Green Street Facilities with a vertical drop adjacent to sidewalks in low-volume pedestrian areas must be surrounded by a minimum 4 inch high curb.
  - Green Street Facilities with a vertical drop must have a minimum 4-inch curb or railing between the parking step out zone and the drop.
  - Green Street Facilities with a sloped side must provide a flat (5% maximum slope) 6-inch minimum width buffer of different material to meet flush with adjacent sidewalk. Green Street Facilities with a depth greater than 3-feet must provide a flat (5% maximum slope) 24-inch minimum width buffer. When sides are sloped, the finished grade must be stabilized with plants, sod, seed, mulch, or stone.
  - Green Street Facilities adjacent to a designed shared use path (bicycle facilities) must provide a 5% maximum slope, 24-inch width buffer of different material to meet flush with adjacent path. A sloped side with maximum 3:1 slope and maximum 5-foot depth or 12-inch maximum drop is allowed. If either of those conditions is exceeded, a 42-inch height guard is required.
- Pedestrian crossings of continuous Green Street Facilities adjacent to curb are required as below.
  - One 4’ wide paved crossing between each tree well and 35 foot maximum spacing in high-volume pedestrian areas
  - One 4’ wide crossing every other tree and 70 foot maximum spacing in other areas consistent with surrounding area (paved, vegetated, or mulched).
- Parking step out zone of a width between 18” and 36”, (measured from face of curb) is required for Green Street Facilities adjacent to parking lanes. When placing and designing Green Street Facilities adjacent to travel ways, check for clear zone and traffic barrier needs. Adjust design to avoid use of traffic barriers whenever possible. The curb serves as a barrier for vehicle safety on most County streets. On streets without curb, provide a

concrete header between the road and Green Street Facilities, with maximum 10:1 side slope beyond the header to a maximum drop of 18 inches.

- Green Street Facilities with sloped sides with a total depth of more than 18 inches shall require a fence of 36-inch height enclosing the entire facility.
- Green Street Facilities with a greater than 18" vertical drop require a 42" railing meeting International Building Code 1013 (Guards).
- Access is required to all Green Street Facility areas for maintenance. For facilities off the road, an access road may be needed. For facilities on high speed roads, ensure safe access via a shoulder or designated area. Within the facility area, the overflow structure must be accessible to maintenance crews.

5.11.1.5.7 Limitations

- A vertical separation of 10 feet is required between the bottom of Green Street Facilities proposing infiltration and the top of the seasonally high groundwater table.
- Green Street Facilities with infiltration are not allowed in areas with contaminated soil or groundwater.

5.11.1.6 Permeable Pavement

Permeable pavement is being demonstrated for suitability and durability in the County ROW. Permeable pavement may be proposed for use in place of impervious surfaces, in appropriate locations. The Director must approve any use of permeable pavement at specific locations in County roadways, alleys, and trails.

5.11.1.6.1 Types of Permeable Pavement Facilities

The types of permeable pavement facilities and appropriate uses are tabulated below. Types subjected to vehicular traffic loads include permeable asphalt, pervious concrete, and permeable interlocking concrete pavers. Other types not subjected to traffic loads, may be allowed on a project by project basis. Designs which differ from the table below may be allowed with approval by the Director.

Permeable Pavement Type	Appropriate Uses
Permeable Interlocking Concrete Pavers	Shoulders Parking Spaces Sidewalks
Pervious Concrete	
Pervious Asphalt	
Stabilized Decomposed Granite	Walkways and trails
Pervious Rubber	Tree well covers

5.11.1.6.2 Contributing Drainage Area

Stormwater runoff from pervious areas often contribute sediment and lead to clogging and increased maintenance requirements for pervious pavement, and should be avoided to the extent possible. Ideally, at least 90-percent of the area draining to pervious pavement shall be impervious, not including the permeable pavement area itself. Pretreatment, drainage area stabilization, and specific maintenance program are options that the County will consider for implementation where contributing drainage area is less than 90-percent impervious.

5.11.1.6.3 Permeable Pavement Base Design

<u>All Permeable Pavement Systems:</u>

- The wearing surface is the pavement material plus any required bedding layers under the surface and inside of the joints, in accordance with all applicable standard details, specifications and manufacturer recommendations as applicable. The wearing surface shall meet the latest ADA requirements.

5.11.1.6.4 Stormwater Conveyance and Retention

Stormwater conveyance from all impervious areas including standard pavement shall, to the extent feasible, drain to permeable pavement as sheet flow. Otherwise pre-treatment for energy dissipation and sediment control may be required where any concentrated flow is directed onto pervious pavement. Level spreaders may be designed to convert concentrated flow to sheet flow into the pervious pavement facility.

<u>Reservoir and Underdrain - Sizing for Retention Volume</u>

The volume of storage for permeable pavements systems shall be designed to meet the regulatory requirements promulgated by County. Storage design shall meet the following:

- Subsurface drainage will consist of a minimum 6-inch diameter perforated underdrain in the reservoir layer or a separate layer of open graded stone below the reservoir layer. Subsurface drainage is recommended beneath all vehicular use permeable pavement installations unless elimination of the underdrain is expressly approved by the Director.

Permeable pavement may be installed in areas with no traffic volume without underdrains if infiltration results are good and underdrain connections are not feasible.

- For sites where native soil design infiltration rate sufficient to drain the volume below the underdrain within 72 hours, the subsurface pipes may be elevated to provide infiltration sumps of reservoir stone. Use of a raised underdrain is encouraged and provides enhanced retention. An alternative approach to a raised underdrain is an underdrain with an up-turned elbow outlet.

- For designs with a waterproof membrane on the bottom as required in the Geotextiles and Liners section, the minimum slope of the subsurface drainage pipes is 2-percent and shall match the bottom (invert) slope of the facility.

- For designs without a waterproof membrane, the minimum slope of subsurface drainage pipes shall be 0.5-percent.

- Clean-outs are required for all underdrained permeable pavement facilities. Clean-outs shall be spaced at 100 foot maximum intervals. Where a storm drain structure such as catch basin, manhole, or overflow structure is within 100 feet of a clean-out, it will serve the same function as a clean-out.

- Observation wells are required for facilities without underdrain and shall be shown on design plans. Observation wells shall be spaced at 100 foot maximum intervals.

- Drawdown time for shall be 24 hours minimum and 96 hours maximum. Drawdown time is calculated based on infiltration rate of native soils at the invert of the facility, and the flow through underdrains.

- The reservoir will be sized so that the runoff associated with the 2 year, 24 hour frequency storm does not surcharge the wearing surface at the low end of the facility.

- Overflow conveyance for higher storms shall be designed to surface convey into existing or new storm sewer systems adjacent to the permeable pavement.

To achieve the design volume, the profile of the pavement shall be designed in one of the following scenarios, which shall be selected based on topography of the site, location of utilities and other underground features, project budget, and any other constraints related to specific site:

- Use of a continuous bottom slope less than or equal to 2-percent.

- Use of a terraced invert, with the slope between steps less than or equal to 2-percent. Vertical drop of terraced invert shall generally be 6-inches to 12-inches, but can vary to achieve design requirements.

- Use of check dams with variable bottom slope, located so that the 2 year, 24 hour runoff volume does not surcharge the low end of the wearing course Check dam material options include waterproof membrane, PVC sheeting, acrylic sheeting, and concrete. Use of membranes and sheeting are the most cost effective and generally preferred options. A transverse underdrain may be needed in check dam systems if the base of a step does not slope to the longitudinal underdrain or if needed due to the width of the permeable pavement system.

5.11.1.6.5 Pavement Structural Design

For pavements subjected to vehicle traffic loading, pavement design calculations shall be required. Pavement design may result modifications to the pavement cross section in the County approved standard drawings to meet or exceed the pavement strength requirements.

Caltrans methods for rigid pavement design shall be used for permeable concrete. Caltrans methods for flexible pavement design shall be used for pervious asphalt. Caltrans methods for flexible pavement design, with appropriate layer coefficients as applicable to the interlocking, shape, and thickness of the pavers, shall be used for interlocking permeable unit pavers. Guidance for layer coefficients is provided by the Interlocking Concrete Pavers Institute.

Testing of the bearing capacity for underlying soils shall be required for all permeable pavements for vehicular use, shall be site specific, and shall be in accordance with ASTM D4429-09a, Standard Test for California Bearing Capacity of Soils in Place. Other considerations for the pavement design include:

- Edge restraints shall be used for all permeable unit pavers. Edge restraints may also be used for permeable asphalt and permeable concrete as necessary.
- In soft soils with low bearing capacity where infiltration is planned, geo-grid as the preferred option over removal of the material and placement/compaction of select backfill.

5.11.1.6.6 Limitations

- Permeable pavements are not to be used in the traveled way.
- A 10-foot vertical separation is required between the bottom of the permeable pavement system and the top of the groundwater table.
- Permeable pavements with infiltration are not allowed in areas of soil or groundwater contamination.

SECTION 6
DESIGN PRINCIPLES

All Green Streets facilities shall comply with the most current version of the County of San Diego Hydraulic Design Manual

Section 6.4 PAVEMENT AND STRUCTURAL SECTION

6.4.1 Green Street Surfacing

Per approval of the Director, permeable pavement roadway may only be used in medians, shoulders and parking lanes if deemed appropriate for use immediately adjacent to a standard structural section. The permeable pavement facility can be designed to provide an adequate drainage system. Overflows and storm drain lines may still be required. The permeable pavement shall conform to the Green Street Standard Drawings.

Section 6.6 UTILITY PLACEMENT

Potential conflicts between Green Streets LID BMP facilities and utilities within the street and parkway will need to be addressed during the early design phases of the project and may require flexibility in the design to accommodate utility locations and access.

6.6.1 Utility Clearances at LID Facilities

Utilities are allowed to co-locate in LID facilities subject to acceptance by the utility owner. Individual projects should be coordinated with the utility owners for specific requirements. Current guidelines for clearances of utilities are as follows:

6.6.1.1 Communications/Power

a. Offsets to communications, power and Gas facilities must be coordinated with the Utility company on a project by project basis.

6.6.1.2 Gas

a. For gas lines within 6 inches of LID facilities, the contractor must install a protective shield around the pipe. The shield must be made of fiberglass reinforced plastic (FRP), or other approved insulating material, in either a 12-inch by 12-inch flat-tie plate or clip-on configuration. The shield must be placed over the gas pipe and secured in place to provide adequate protection.

b. For gas lines that are less than 6-inches from the LID facility or within the LID facility, the contractor must install a combination of a protective shield and sleeve. The protective sleeve must consist of either a gray PVC semi-circular sleeve, which comes in 60-inch lengths, or a larger plastic pipe. This protective sleeve must be installed over the gas pipe so

that the protective sleeve extends at least 9-inches on either side of the area in conflict. The shield shall meet requirements described above.

c. Maintain a minimum of 12-inches separation from underdrains to gas facility.

d. Four (4) foot minimum clearance is required between the top of gas facilities and finished road surface grade.

e. Three (3) foot minimum cover is required over gas facilities in open drainage or road ditches.

6.6.1.3 Water and Sewer

a. A minimum of 12-inches of cover is required between bottom of LID facilities and water main, sewer main, or sewer lateral.

b. When less than 5 feet vertical clearance is provided between bottom of LID facility and sanitary sewer main, an impermeable liner shall be used at the bottom of the LID facility to a horizontal distance at least 3 feet beyond the sewer main.

c. Water service laterals my run through LID facilities. Impermeable liners must be properly sealed where penetrated by water service laterals.

d. Concrete collars shall be provided around surface structures within LID facilities (cleanouts, valve boxes, etc.). Top of collar shall be above ponding depth in Rain Garden.

6.6.1.4 Street Lights

a. Street light conduits and poles can run through LID facilities.

b. The designer shall ensure that installation of shrubs or plants do not block access to openings of the transformer base. Access to transformer bases can face either the roadway or towards the sidewalk.

6.6.1.5 Fire Hydrants

a. On sidewalk side, 3 feet minimum clearance must be provided around hydrants.

b. On street side, clearance must be provided for 10 feet in each direction longitudinally along the street, and 4 feet into the street to create a 4 feet by 20 feet access area. This access area may be paved with permeable pavement capable of supporting fire equipment.

Section 6.7 DRIVEWAYS

Curb openings shall be allowed where drainage is conveyed to Rain Garden swales or other Green Infrastructure.

Section 6.9 GREEN STREETS LANDSCAPE DESIGN CRITERIA

6.9.1 Tree Well Design

Tree wells shall be selected from approved lists, and placed in appropriate locations within the

public ROW out of the Clear Recovery Zone and lines of sight. Surrounding soils, including nearby soils under sidewalks shall comply with the design requirements noted below.

6.9.1.1 Minimum Soil Volumes

The following are the minimum allowable soil volumes for tree rooting:

a. 2 cubic feet of soil volume shall be provided for each square foot of mature tree canopy footprint. Soil volume must be within 1.5 times the canopy radius. Soil depth shall be a minimum of 30 inches deep, preferably 36 inches deep.

b. Where soil volumes within the maximum allowable radii for adjacent trees overlap, up to 25-percent of the required soil volume per tree may be shared.

c. For trees that are designed to have a covered soil volume which connects to an open area (for example behind the sidewalk), the open area can be considered as part of the required soil volume.

d. For existing trees to remain, the root structure of existing tree shall be protected to the extent feasible and provided with additional soil volumes to meet the above requirements.

e. Soil Volume calculation shall be calculated as:

   i. (Area of Open Soil x Depth of soil) plus (Area of Covered Soil x Depth of soil)

   ii. All soil types are calculated at full volume.

   iii. There may be multiple soil volume areas included in the calculation depending on design.

6.9.1.2 Tree Planting Design in New or Reconstructed Streetscapes

- Maximized open soil area for tree planting is the most cost effective method of achieving the required soil volume.

- Open tree wells within sidewalks that have soil volume beneath pavement will be a minimum of four feet wide by six feet long. Larger areas may be required to accommodate large root balls or additional plant materials.

- Tree well planting space with continuous open areas adjacent to sidewalk may utilize mulched areas between trees, defined as “plant bed.”

- The size of the open tree well planting area is influenced by the site as follows:
  - For narrow public space areas, the open tree well will typically be covered by a tree well grate, with a goal of providing additional paved surface for pedestrian usage.

  - For wider public space areas, the open tree well can be continuous, with pedestrian crossings.

6.9.1.3 Tree Planting Design in Confined Spaces

Reductions in tree well planting space and soil volumes must be justified by physical constraints and approved by the Director.

- Open tree well planting space within existing sidewalk areas that do not have soil volume beneath pavement will be a minimum of four feet wide by six feet long.

- To the extent feasible, soil rooting volumes shall be expanded by creating vegetated areas adjacent to trees longitudinally, or by placing structural soils beneath pavements extending along the sidewalk or across the sidewalk.

- Other soil expansion options include reducing compaction, air spading around roots and addition of planting soil, or other methods as recommended by arborist or landscape architect.

6.9.1.4 Covered Soil for Meeting Tree Soil Volume Requirements

In order to provide adequate soil volume for tree wells, horticulturally appropriate soils must often be placed beneath the adjacent paved surfaces. Acceptable soil systems include suspended pavements, structural cells, and several types of structural soils:

- Suspended pavements include structural slabs that span between structural supports that allow uncompacted growing soil beneath the sidewalk, and commercially available structural systems. Manufacturer details and certification must be provided for commercial systems. Structural calculations and details must be provided for Suspended Pavement installations.

- Structural cells are commercially-available structural systems placed subsurface that support the sidewalk and are filled with amended soil. Manufacturer details and certification must be provided for commercial systems. Amended soil placed within structural cells shall be a minimum of 36 inches.

- Proprietary structural soil systems, such as CU-StructuralSoil™ or Stalite Structural Soil, or equivalent, may be used however; there use may be limited in conjunction with stormwater infiltration.

- Stalite Structural Soil is a proprietary product consisting of lightweight aggregate with a horticultural application.

6.9.1.5 Tree Well Soil Volume Cross Section

Soil Types

Soil types used in the tree well, in accordance with the County's approved specification, are generally described as follows:

- Planting Soil: used for the top 12 inches of open planting beds.
- Engineered Soil Media: used in Rain Garden basins, swales, curb extensions, and beneath suspended pavements.
- Proprietary soil systems such as CU Soil® or equivalent: used to support pavements and obtained only from licensed providers.

6.9.1.6 Stormwater Retention and Treatment Volume

Tree wells with expanded soil volume will serve as a method of capturing and retaining the required volume of stormwater in accordance with County requirements. These facilities can be designed to meet the requirements of the County's Rain Garden type "Engineered Tree Box" when surface ponding volume is provided, whether designed as an enclosed plant bed with covered soil volume, or a continuous open area (either mulched or with turf) with soil volume under the adjacent sidewalk. The tree well can function as an area for "Disconnected Impervious Surface" to capture runoff from the sidewalk.

6.9.2 Access and Safety Barriers

- Pedestrian crossings of continuous open planting strips adjacent to curb are required as below.
  - 4 foot paved area between each tree in high-volume pedestrian areas
  - Alternating every other tree in other areas, with surface material appropriate to surrounding area (paved, vegetated, or mulch).
- Parking egress strip of an 18-inch minimum width (measured from face of curb) may be provided adjacent to curb in street parking zones where total public space width is at least 10 feet between face of curb and back of sidewalk, using the remaining space available after deducting the required sidewalk width and minimum open tree well dimension requirements.
- Ornamental fencing meeting County requirements may be required around open tree planting space to protect planting soil from pedestrian foot traffic.
- Bike racks may be combined with ornamental fencing around open tree planting space. Type of rack to be selected in coordination with the Department of Public Works.

6.9.3 Structural Support

All structural elements, including pavements and curbs, must be founded over structurally stable soils. Stable buried soils should extend laterally from the point of support at a slope of 1 horizontal to 2 vertical in the downward direction. Plant Bed and Engineered Soil Media are not structurally stable. Products such as CU Soil™ are structurally stable.

6.9.4 Planting Guidance for Vegetated Stormwater Systems

Selection of plant species, locations, and spacing within vegetated stormwater management facilities (Rain Garden) will be based on the following parameters:

a. Light - full sun, partial shade, full shade

b. Water - Some plants will succeed in areas that are inundated with water frequently while others will only do well when they are located in the driest part of the facility

c. Salt - Plants that have a high salt tolerance are the best choice for facilities that will receive a large amount of salt-tainted runoff

d. Pollution – Generally, plants that are in areas with higher pollution will require more maintenance and care throughout their lifespan in order to remain aesthetically pleasing

e. Maintenance – Areas with low maintenance should be planted with plants that do not require intensive care. Areas that will be maintained several times a year can be planted with plants that require more attention.

f. Survivability in urban environment - All of the above factors relate to the plant's ability to survive in a green street facility

g. Size – plants should be the appropriate mature size for the site. Site viewing lines, pedestrian, and vehicle safety should be considered. Plants, except tree wells, between the curb and sidewalk should be less than 18-inches high above the sidewalk level. Trees located within the clear recovery zone shall have a mature diameter less than 4” at breast height.

The designer will select the plants for the Rain Garden facilities that are compatible with the Water Efficient Landscape Design Manual. The list is organized in accordance with the above factors, and is grouped into three maintenance categories: low level of care, medium level of care, and high level of care.

SECTION 9

EXCEPTIONS

Section 9.1 EXCEPTION PROCESSING PROCEDURES

Green Street facilities should allow for fire vehicle access such that an exception request for roadway width or median width is not required due to Fire Authority approval.

Section 9.2 FLEXIBILITY IN COUNTY ROAD DESIGN

Design guidelines for considering and implementing design flexibilities that allow variations for environmental constraints are included within these Green Street Design Criteria.

This page is intentionally left blank

K.4 Green Streets Design Standard Drawings

This page was left intentionally blank.

Green Streets
Supplement to County of San Diego
Design Standard Drawings

County of San Diego
Department of Public Works

February 2016

This page was intentionally left blank

SAN DIEGO COUNTY
DEPARTMENT OF PUBLIC WORKS

GREEN STREETS STANDARD DRAWINGS

NUMBER	TITLE
GS-1.1a	TREE WELL
GS-1.1b	TREE WELL
GS-1.2a	TREE WELL
GS-1.2b	TREE WELL
GS-1.3a	TREE WELL WITH PERMEABLE PAVEMENT
GS-1.3b	TREE WELL WITH PERMEABLE PAVEMENT
GS-1.4a	TREE WELL WITH OPEN TREE SPACE
GS-1.4b	TREE WELL WITH OPEN TREE SPACE
GS-1.5	TREE WELL WITH STRUCTURAL SOIL SUBSURFACE DRAINAGE OPTIONS
GS-2.1	RAIN GARDEN PLANTER ADJACENT TO ROADWAY - 1 (NO STEP OUT ZONE)
GS-2.2	RAIN GARDEN PLANTER ADJACENT TO ROADWAY - 2 (WITH STEP OUT ZONE)
GS-2.3	RAIN GARDEN IN OPEN AREA
GS-2.4	SWALES ADJACENT TO ROADWAY
GS-2.5a	STREET SIDE EDGE TREATMENT -1 (NO STEP OUT ZONE)
GS-2.5b	STREET SIDE EDGE TREATMENT - 2 (WITH STEP OUT ZONE)
GS-2.5c	SIDEWALK SIDE EDGE TREATMENT
GS-2.6a	CURB CUT WITH SPLASH PAD - 1
GS-2.6b	CURB CUT WITH SPLASH PAD - 2
GS-2.7	CURB CUT METAL TRENCH COVER
GS-2.8	GALVANIZED STEEL CHANNEL OVER CURB CUT
GS-3.1a	CURB EXTENSION ADJACENT TO PLANTING STRIP
GS-3.1b	CURB EXTENSION ADJACENT TO PLANTING STRIP
GS-3.2	CURB EXTENSION ADJACENT TO SIDEWALK
GS-3.3	INLET AND OUTLET DETAILS FOR CURB EXTENSION
GS-4.1a	CONCRETE CHECK DAM
GS-4.1b	CONCRETE CHECK DAM
GS-4.2a	ROCK CHECK DAM
GS-4.2b	ROCK CHECK DAM
GS-5.1a	PERMEABLE CONCRETE PAVEMENT
GS-5.1b	PERMEABLE CONCRETE PAVEMENT (SIDEWALK)
GS-5.2a	PERMEABLE ASPHALT PAVEMENT
GS-5.2b	PERMEABLE ASPHALT PAVEMENT (SIDEWALK)
GS-5.3a	PERMEABLE PAVERS
GS-5.3b	PERMEABLE PAVERS (SIDEWALK)
GS-5.4a	PERMEABLE PAVEMENT ELEVATION - 1
GS-5.4b	PERMEABLE PAVEMENT ELEVATION – 2

GS-5.4c	PERMEABLE PAVEMENT CHECK DAMS
GS-5.5	PERMEABLE PAVEMENT EDGE RESTRAINT
GS-6.1	OVERFLOW RISER WITH BEEHIVE GRATE
GS-6.2	STORMWATER FACILITY CLEANOUT/ OBSERVATION WELL
GS-6.3	STORMWATER FACILITY UNDERDRAIN BEDDING AND CATCH BASIN CONNECTION
GS-7.1	GREEN STREET VEGETATED SWALE WITH CURB
GS-7.2	ROCK INFILTRATION SWALE
GS-7.3	RAIN GARDEN / ROCK GARDEN INFILTRATION
GS-7.4	VEGETATED FILTER STRIP

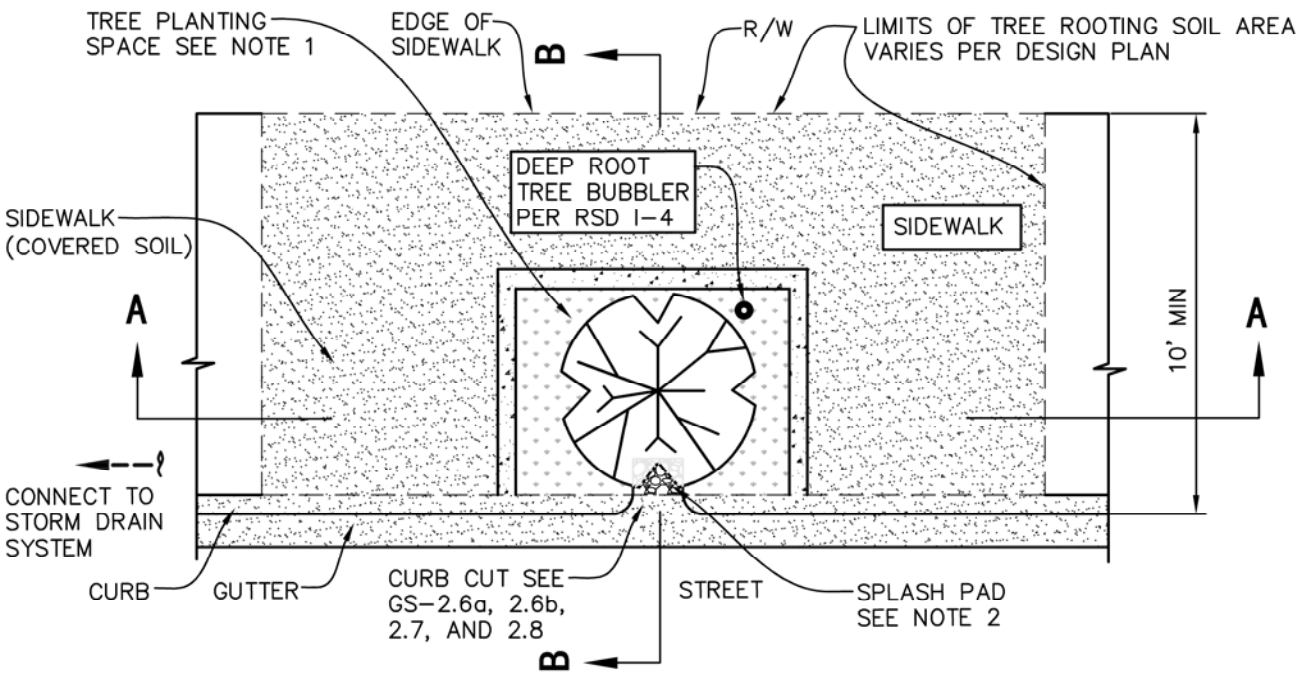

PLAN VIEW

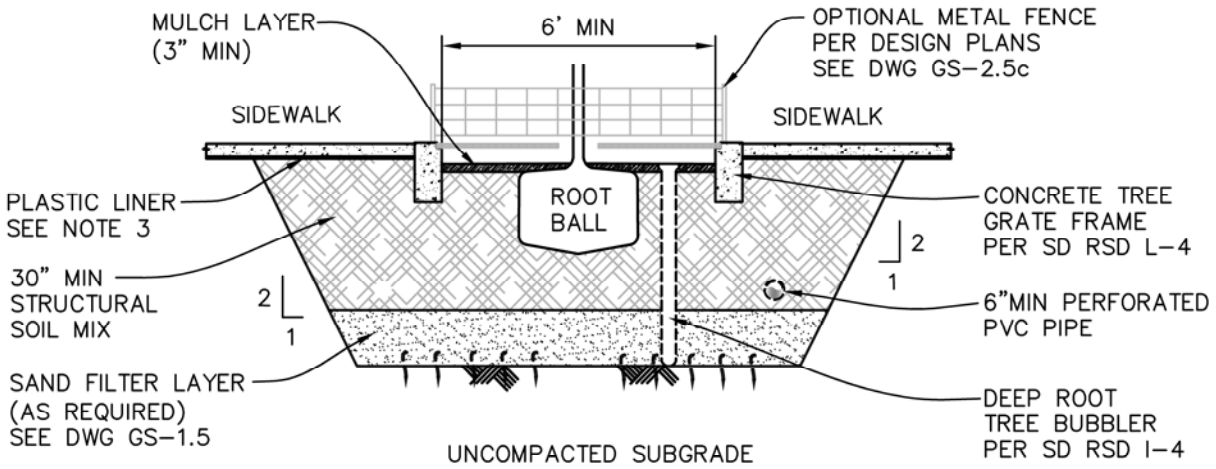

SECTION A-A

NOTES:

1. MINIMUM OPEN TREE PLANTING SPACE DIMENSION 4'x6'.
2. PROVIDE SPLASH PAD FOR TREE PLANTING SPACE PER GS-2.6b.
3. PROVIDE PLASTIC LINER WHERE CONCRETE WILL BE POURED ON TOP OF STRUCTURAL SOIL PER GREEN BOOK STANDARD SPECIFICATIONS SECTION 210-2.

DRAWING NOT TO SCALE

DRAWN BY: M.M.	CHECKED BY: S.W.K.	SAN DIEGO COUNTY DESIGN STANDARD	REVISIONS	APPROVED	DATE
RECOMMENDED BY: STUART W. KUHN, P.E.					
APPROVED BY COUNTY ENGINEER		TREE WELL			
DATE:			DRAWING NUMBER	GS-1.1a	
DEYLAMIAN SIROUS, P.E. R.C.E. NO. 53192, EXP 6/30/2017					

NOTE: THIS DRAWING IS TO BE INCLUDED ON PLANS UNTIL SIGNED BY THE COUNTY ENGINEER. ONCE SIGNED, IT CAN BE REFERENCED BY NUMBER

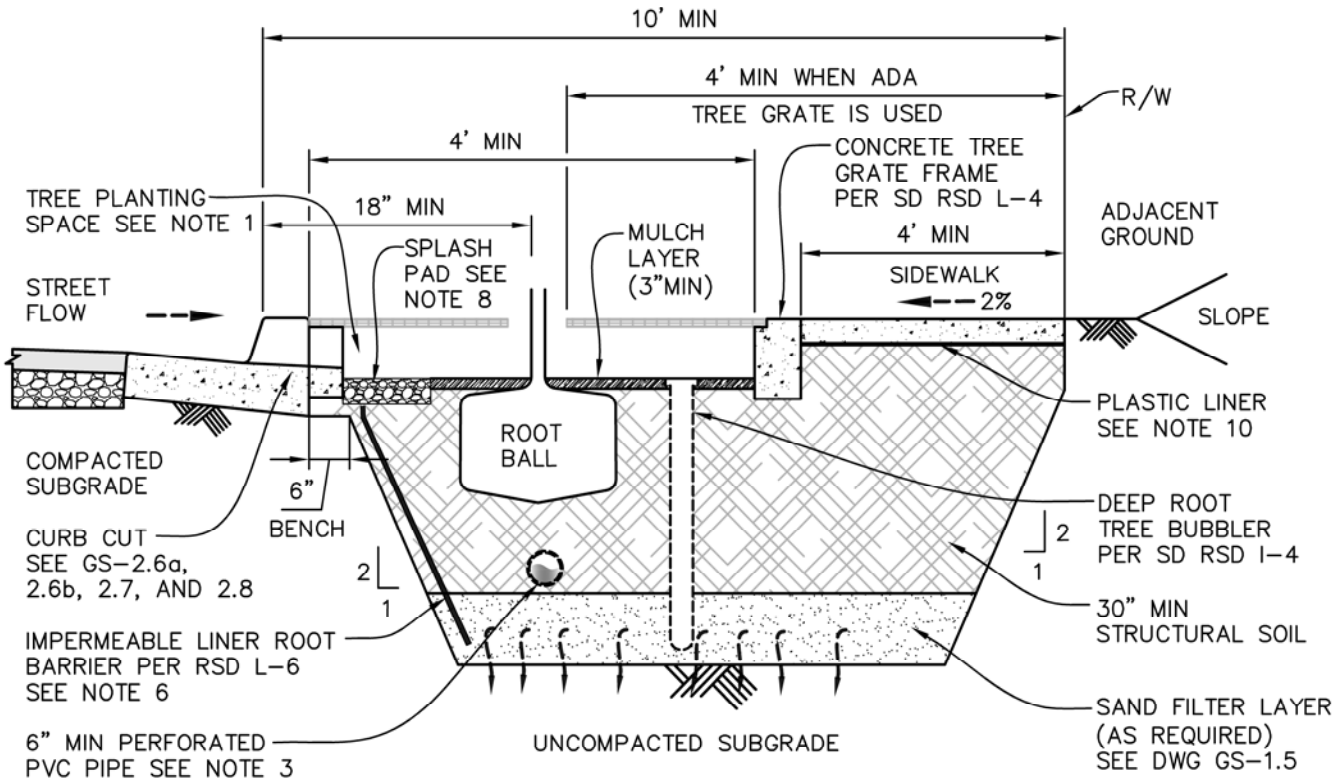

SECTION B-B

NOTES:

1. MINIMUM OPEN TREE PLANTING SPACE DIMENSION 4'x6'.
2. MAXIMUM WATERSHED AREA: 6 TIMES AREA OF THE OPEN TREE PLANTING AREA.
3. SEE DWG GS-1.5 FOR BOTTOM SAND LAYER AND SUBSURFACE DRAINAGE REQUIREMENTS.
4. FOR SIDEWALK OVER STRUCTURAL SOIL DETAIL OPTIONS, SEE DWG GS-1.5.
5. SEE SD RSD DWG L-1 THROUGH L-4 FOR TREE INSTALLATION REQUIREMENTS.
6. PROVIDE 18" DEEP ROOT BARRIER ON STREET SIDE OF TREE WELL AS NECESSARY.
7. REMOVE WIRE AND BURLAP FROM ROOT BALL PRIOR TO BACKFILLING.
8. PROVIDE SPLASH PAD FOR TREE PLANTING SPACE PER GS-2.6b.
9. IN SOME INSTANCES A MODIFIED SECTION BELOW CURB MAY BE REQUIRED BASED ON SOIL CONDITIONS.
10. PROVIDE PLASTIC LINER WHERE CONCRETE WILL BE POURED ON TOP OF STRUCTURAL SOIL PER GREEN BOOK STANDARD SPECIFICATIONS SECTION 210-2.

DRAWING NOT TO SCALE

DRAWN BY: M.M.	CHECKED BY: S.W.K.	SAN DIEGO COUNTY DESIGN STANDARD	REVISIONS	APPROVED	DATE
RECOMMENDED BY: STUART W. KUHN, P.E.					
APPROVED BY COUNTY ENGINEER		TREE WELL			
DATE:			DRAWING NUMBER	GS-1.1b	
DEYLAMIAN SIROUS, P.E. R.C.E. NO. 53192, EXP 6/30/2017					

NOTE: THIS DRAWING IS TO BE INCLUDED ON PLANS UNTIL SIGNED BY THE COUNTY ENGINEER. ONCE SIGNED, IT CAN BE REFERENCED BY NUMBER

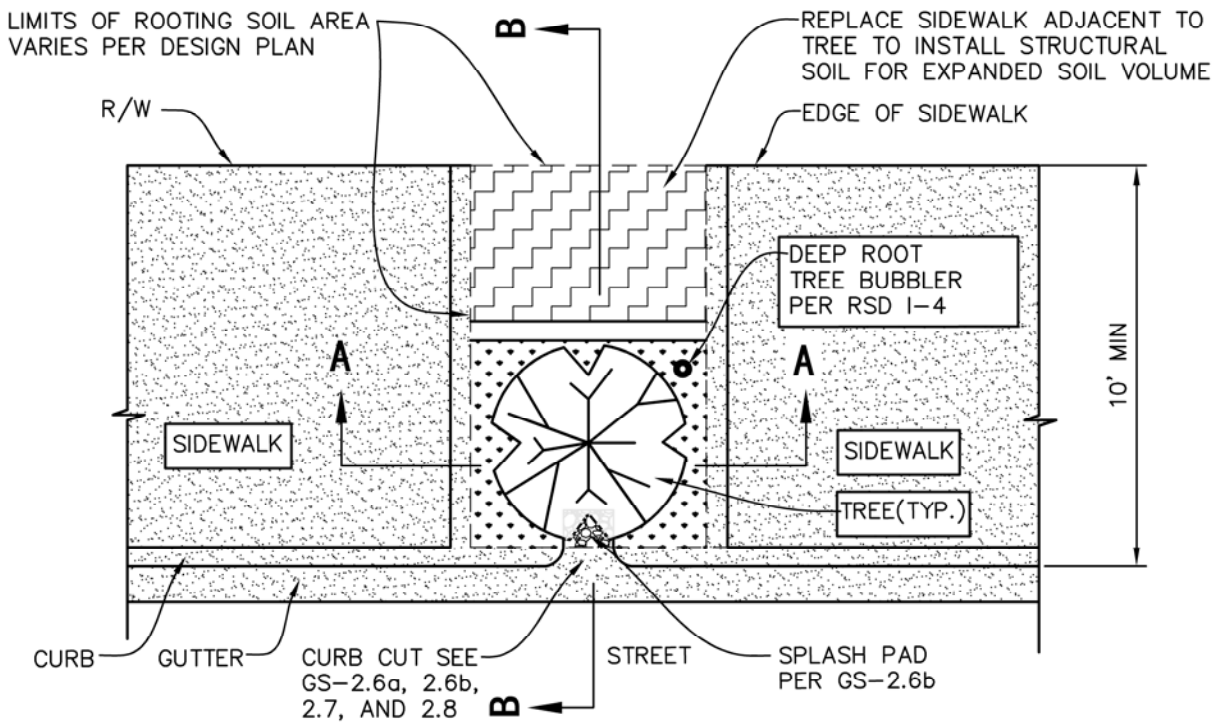

PLAN VIEW

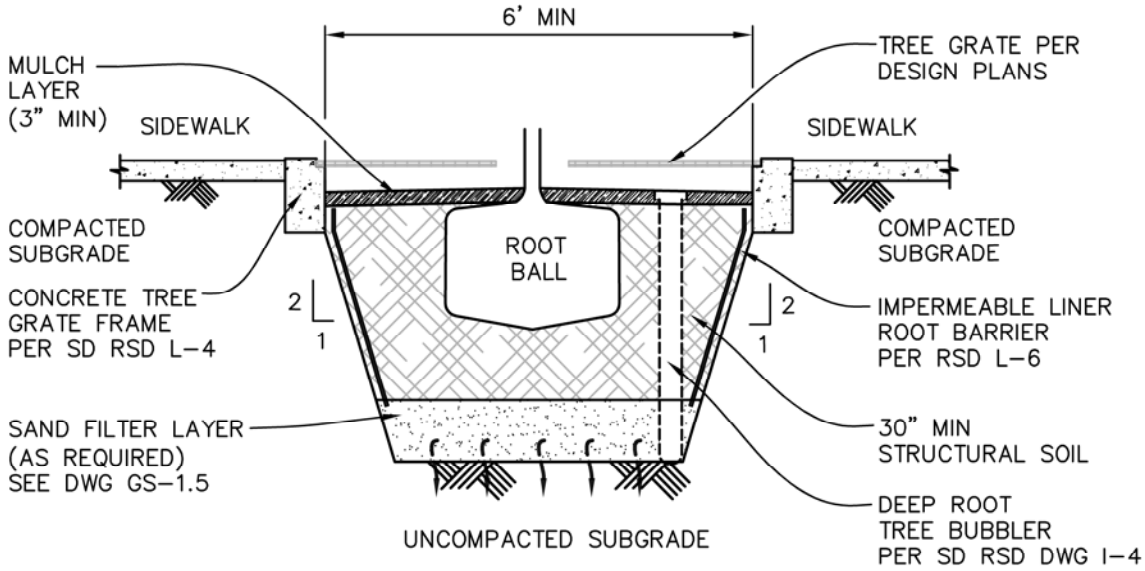

SECTION A-A

DRAWING NOT TO SCALE

DRAWN BY: M.M.	CHECKED BY: S.W.K.	SAN DIEGO COUNTY DESIGN STANDARD	REVISIONS	APPROVED	DATE
RECOMMENDED BY: STUART W. KUHN, P.E.					
APPROVED BY COUNTY ENGINEER		TREE WELL			
DATE:			DRAWING NUMBER	GS-1.2a	
DEYLAMIAN SIROUS, P.E. R.C.E. NO. 53192, EXP 6/30/2017					

NOTE; THIS DRAWING IS TO BE INCLUDED ON PLANS UNTIL SIGNED BY THE COUNTY ENGINEER. ONCE SIGNED, IT CAN BE REFERENCED BY NUMBER

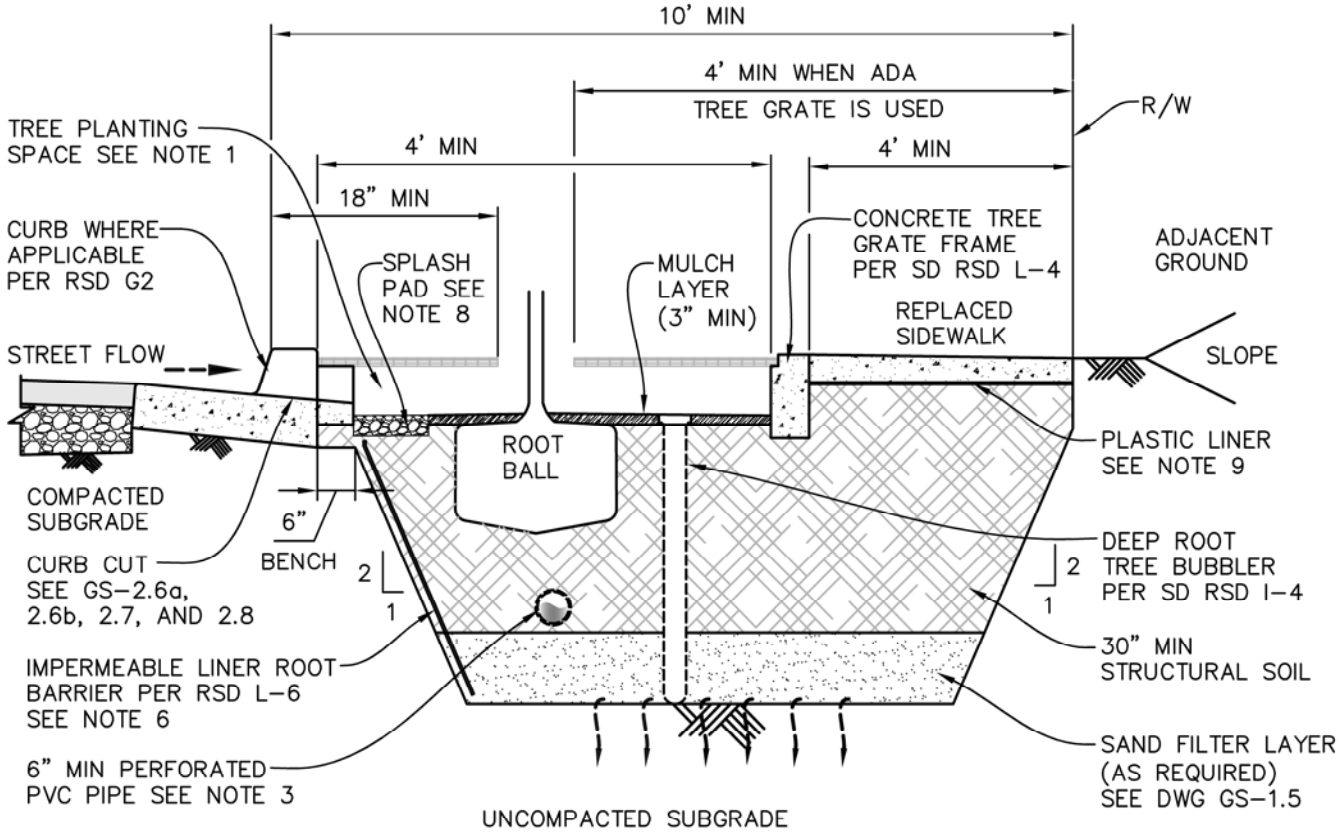

SECTION B-B

NOTES:

1. MINIMUM OPEN TREE PLANTING SPACE DIMENSION 4'x6'.
2. MAXIMUM WATERSHED AREA: 6 TIMES AREA OF THE OPEN TREE PLANTING AREA.
3. SEE DWG GS-1.5 FOR BOTTOM SAND LAYER AND SUBSURFACE DRAINAGE REQUIREMENTS.
4. DETAIL INTENDED FOR NEW TREE PLANTINGS ON SITES WITH CONSTRAINTS TO ACHIEVE FULL SOIL VOLUME.
5. TO ADAPT DETAIL TO EXISTING TREE LOCATION, PROVIDE EXPANDED SOIL VOLUMES BEYOND EXISTING TREE ROOTING AREA; DO NOT DISTURB AROUND EXISTING TREE ROOT.
6. PROVIDE 18" DEEP ROOT BARRIER ON STREET SIDE OF TREE WELL AS NECESSARY.
7. SEE SD RSD DWG L-1 THRU L-4 FOR TREE INSTALLATION REQUIREMENTS.
8. PROVIDE SPLASH PAD FOR TREE PLANTING SPACE PER GS-2.6b.
9. PROVIDE PLASTIC LINER WHERE CONCRETE WILL BE POURED ON TOP OF STRUCTURAL SOIL PER GREEN BOOK STANDARD SPECIFICATIONS SECTION 210-2.

DRAWING NOT TO SCALE

DRAWN BY: M.M.	CHECKED BY: S.W.K.	SAN DIEGO COUNTY DESIGN STANDARD	REVISIONS	APPROVED	DATE
RECOMMENDED BY: STUART W. KUHN, P.E.					
APPROVED BY COUNTY ENGINEER		TREE WELL			
DATE:			DRAWING NUMBER	GS-1.2b	
DEYLAMIAN SIROUS, P.E. R.C.E. NO. 53192, EXP 6/30/2017					

NOTE: THIS DRAWING IS TO BE INCLUDED ON PLANS UNTIL SIGNED BY THE COUNTY ENGINEER. ONCE SIGNED, IT CAN BE REFERENCED BY NUMBER

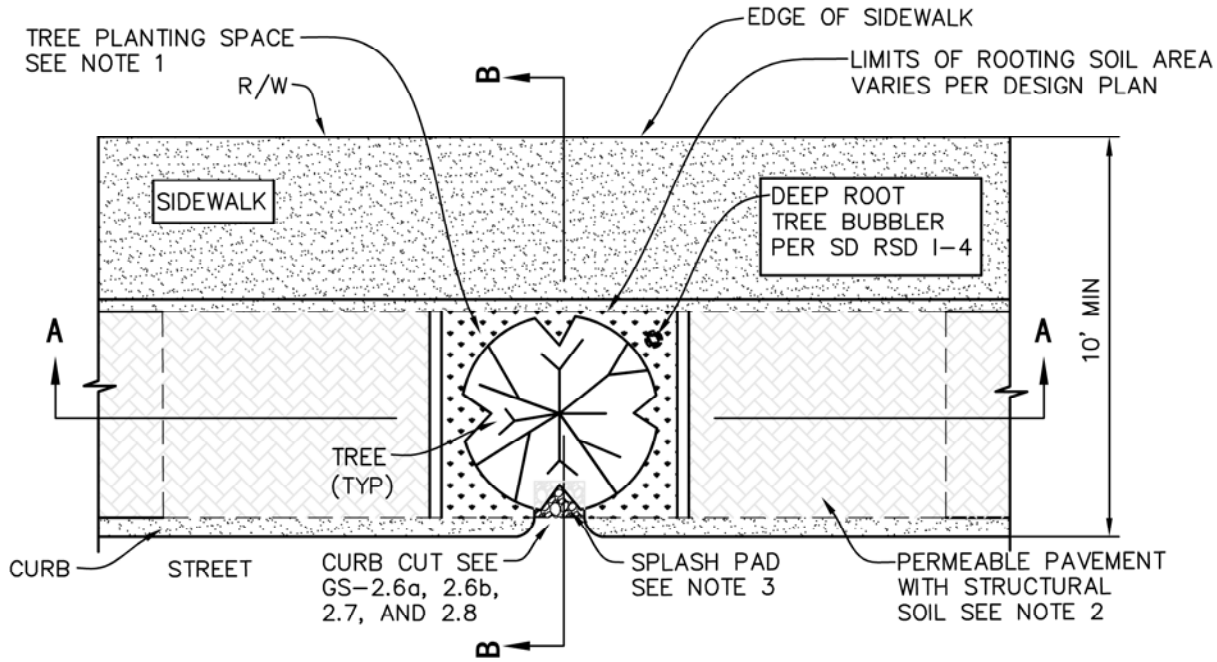

PLAN VIEW

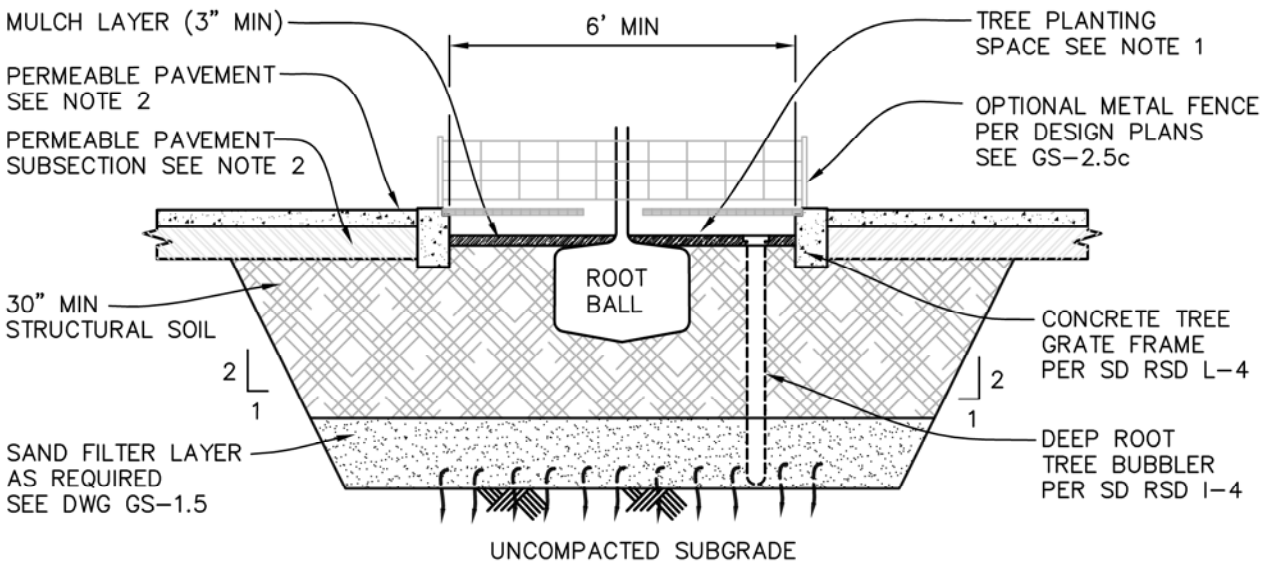

SECTION A-A

NOTES:

1. MINIMUM OPEN TREE PLANTING SPACE DIMENSION 4'x6'.
2. SEE DRAWING GS-5.1, GS-5.2, AND GS-5.3 FOR PERMEABLE PAVEMENT DETAIL OPTIONS.
3. PROVIDE SPLASH PAD FOR TREE PLANTING SPACE PER GS-2.6b.

DRAWING NOT TO SCALE

DRAWN BY: M.M. CHECKED BY: S.W.K.	SAN DIEGO COUNTY DESIGN STANDARD	REVISIONS	APPROVED	DATE
RECOMMENDED BY: STUART W. KUHN, P.E.				
APPROVED BY COUNTY ENGINEER	TREE WELL			
DATE:	WITH PERMEABLE PAVEMENT	DRAWING NUMBER	GS-1.3a	
DEYLAMIAN SIROUS, P.E. R.C.E. NO. 53192, EXP 6/30/2017				

NOTE: THIS DRAWING IS TO BE INCLUDED ON PLANS UNTIL SIGNED BY THE COUNTY ENGINEER. ONCE SIGNED, IT CAN BE REFERENCED BY NUMBER

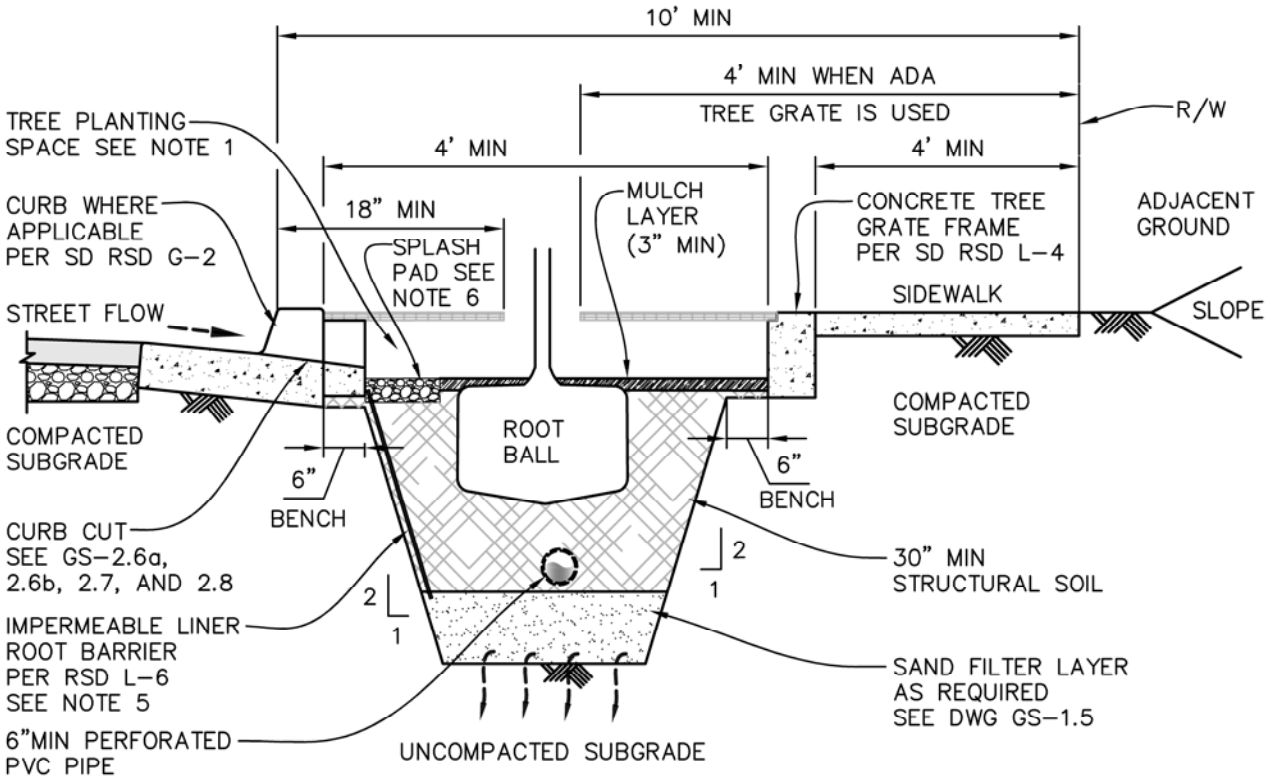

SECTION B-B

NOTES:

1. MINIMUM TREE PLANTING SPACE DIMENSION 4'X6'.
2. MAXIMUM WATERSHED AREA: 6 TIMES AREA OF THE TREE PLANTING BED.
3. DETAIL INTENDED FOR NEW TREE PLANTINGS ON SITES WITH CONSTRAINTS TO ACHIEVE FULL SOIL VOLUME.
4. TO ADAPT DETAIL TO EXISTING TREE LOCATION, PROVIDE EXPANDED SOIL VOLUMES BEYOND EXISTING TREE ROOTING AREA; DO NOT DISTURB AROUND EXISTING TREE ROOT.
5. PROVIDE 18" DEEP ROOT BARRIER ON STREET SIDE OF TREE WELL AS NECESSARY.
6. PROVIDE SPLASH PAD FOR TREE PLANTING SPACE PER GS-2.6b.

DRAWING NOT TO SCALE

DRAWN BY: M.M.	CHECKED BY: S.W.K.	SAN DIEGO COUNTY DESIGN STANDARD	REVISIONS	APPROVED	DATE
RECOMMENDED BY: STUART W. KUHN, P.E.					
APPROVED BY COUNTY ENGINEER		TREE WELL WITH PERMABLE PAVEMENT			
DATE:			DRAWING NUMBER	GS-1.3b	
DEYLAMIAN SIROUS, P.E. R.C.E. NO. 53192, EXP 6/30/2017					

NOTE: THIS DRAWING IS TO BE INCLUDED ON PLANS UNTIL SIGNED BY THE COUNTY ENGINEER. ONCE SIGNED, IT CAN BE REFERENCED BY NUMBER

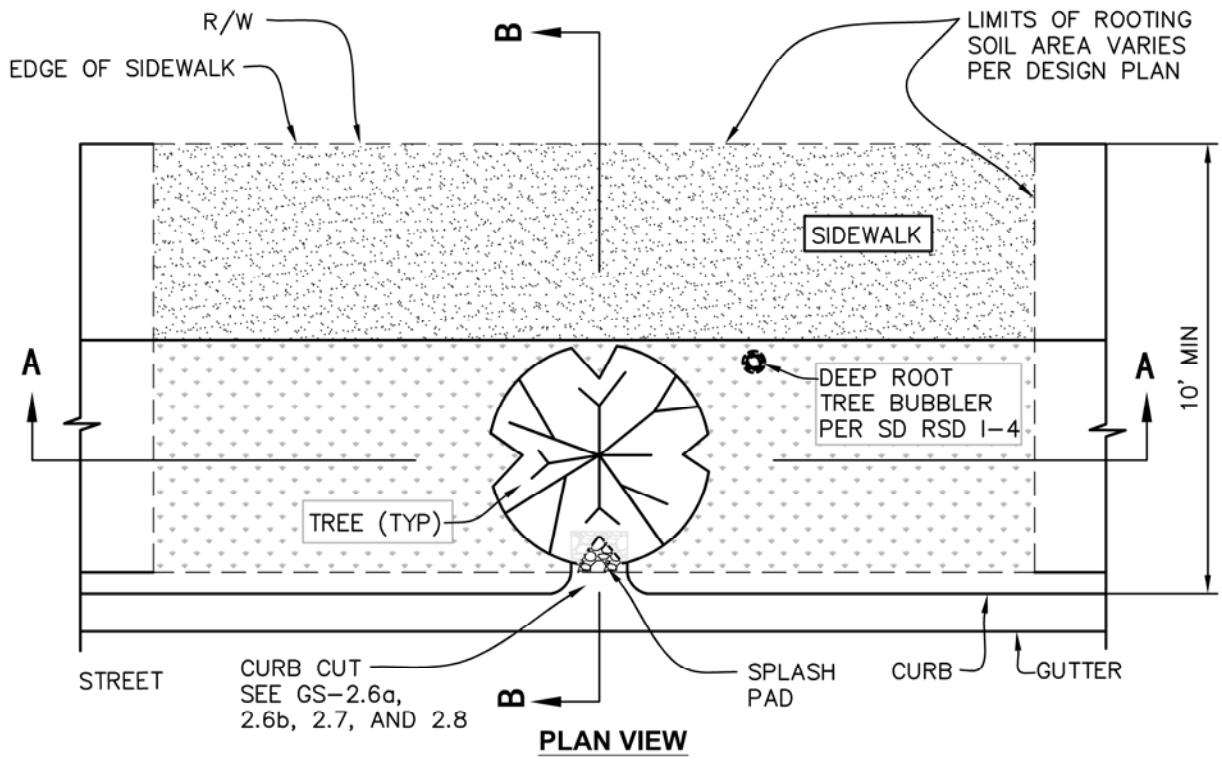

PLAN VIEW

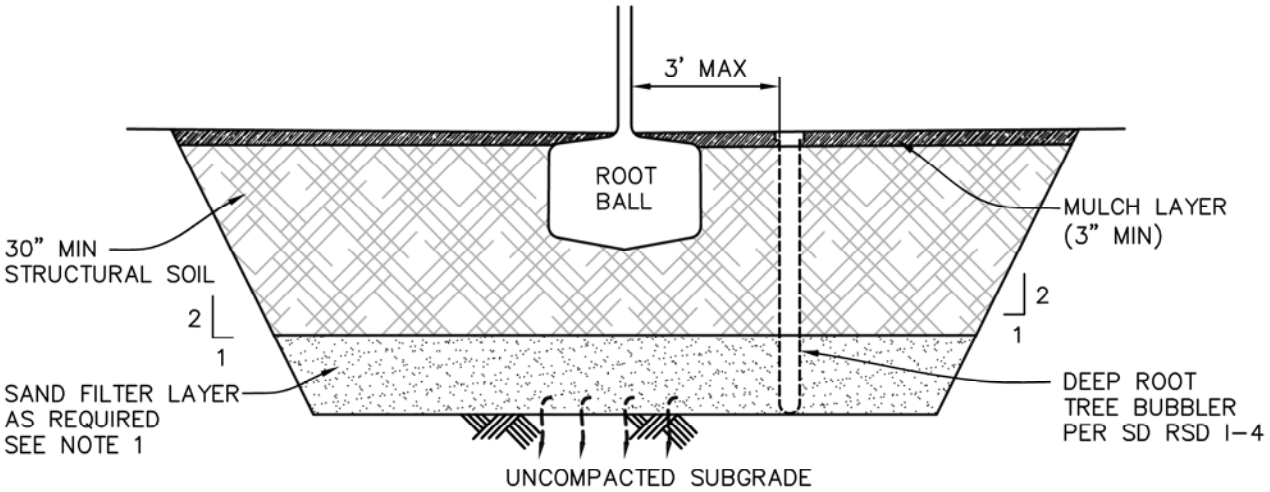

SECTION A-A

NOTES:

1. SEE DRAWING GS-1.5 FOR BOTTOM SAND FILTER LAYER AND SUBSURFACE DRAINAGE REQUIREMENTS.

DRAWING NOT TO SCALE

DRAWN BY: M.M.	CHECKED BY: S.W.K.	SAN DIEGO COUNTY DESIGN STANDARD	REVISIONS	APPROVED	DATE
RECOMMENDED BY: STUART W. KUHN, P.E.					
APPROVED BY COUNTY ENGINEER		TREE WELL WITH OPEN TREE SPACE			
DATE:			DRAWING NUMBER	GS-1.4a	
DEYLAMIAN SIROUS, P.E. R.C.E. NO. 53192, EXP 6/30/2017					

NOTE: THIS DRAWING IS TO BE INCLUDED ON PLANS UNTIL SIGNED BY THE COUNTY ENGINEER. ONCE SIGNED, IT CAN BE REFERENCED BY NUMBER

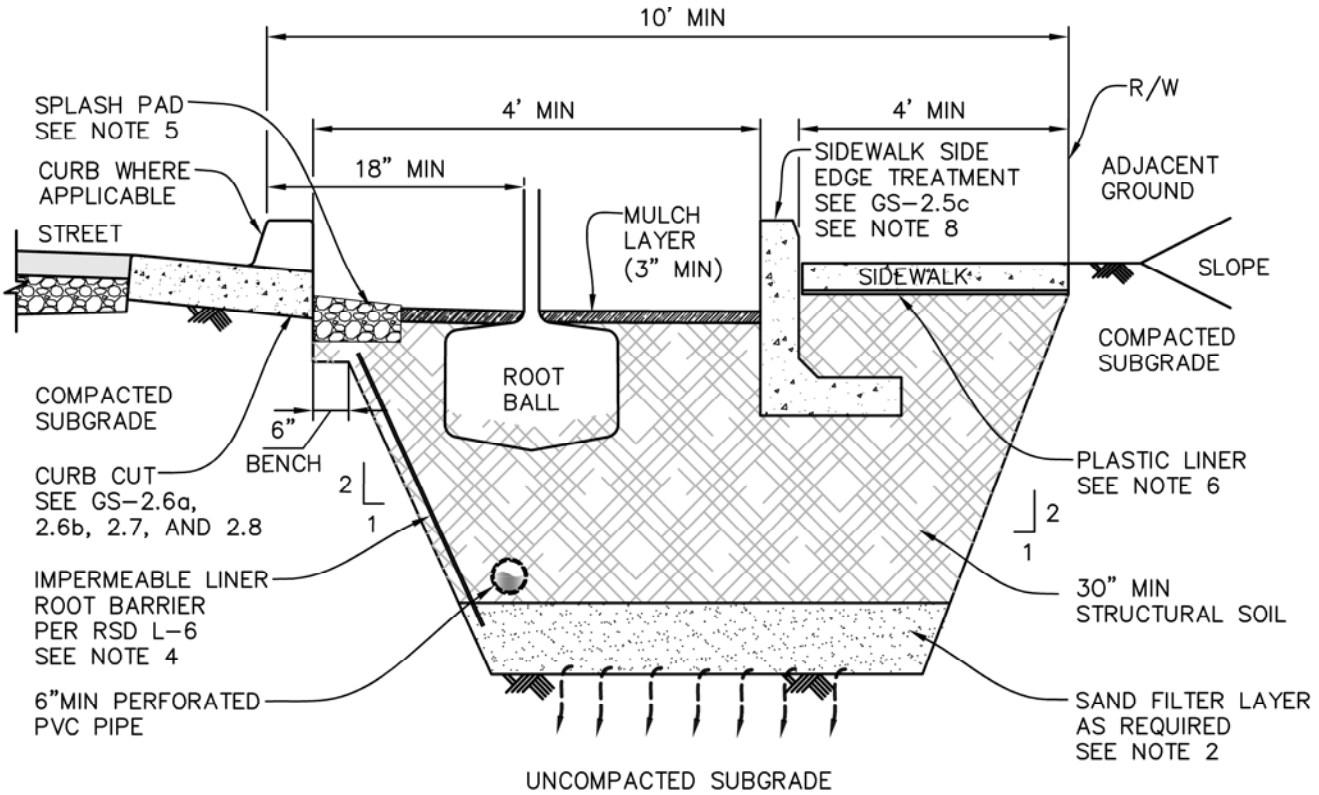

SECTION B-B

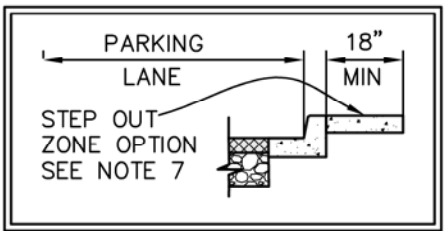

NOTES:

1. MAXIMUM WATERSHED AREA : 6 TIMES AREA OF THE TREE PLANTING BED.
2. SEE DWG GS-1.5 FOR BOTTOM SAND LAYER AND SUBSURFACE DRAINAGE REQUIREMENTS.
3. SEE SD RSD DWG L-1 THRU L-4 FOR TREE INSTALLATION REQUIREMENTS.
4. PROVIDE 18 " DEEP ROOT BARRIER ON STREET SIDE AS NECESSARY.
5. PROVIDE SPLASH PAD FOR TREE PLANTING SPACE PER GS-2.6b.
6. PROVIDE PLASTIC LINER WHERE CONCRETE WILL BE POURED ON TOP OF STRUCTURAL SOIL PER GREEN BOOK STANDARD SPECIFICATIONS SECTION 210-2.
7. 18" MINIMUM STEP OUT ZONE IS REQUIRED WHEN PARALLEL PARKING IS PROVIDED.
8. A 3 TO 1 SLOPE MAY BE USED IN LIEU OF THE L-WALL WHERE ADEQUATE SPACE IS AVAILABLE SEE GS-3.1b.

DRAWING NOT TO SCALE

DRAWN BY: M.M.	CHECKED BY: S.W.K.	SAN DIEGO COUNTY DESIGN STANDARD	REVISIONS	APPROVED	DATE
RECOMMENDED BY: STUART W. KUHN, P.E.					
APPROVED BY COUNTY ENGINEER		TREE WELL			
DATE:		WITH OPEN TREE SPACE	DRAWING NUMBER	GS-1.4b	
DEYLAMIAN SIROUS, P.E. R.C.E. NO. 53192, EXP 6/30/2017					

NOTE: THIS DRAWING IS TO BE INCLUDED ON PLANS UNTIL SIGNED BY THE COUNTY ENGINEER. ONCE SIGNED, IT CAN BE REFERENCED BY NUMBER

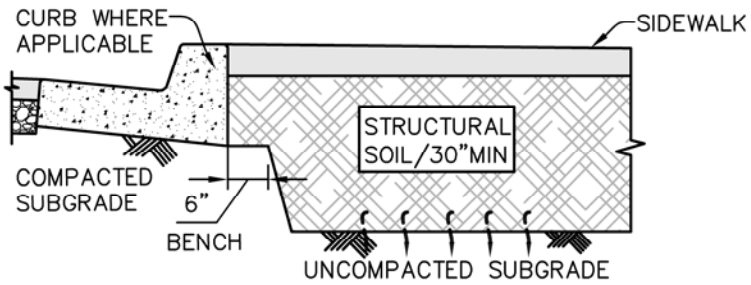

STRUCTURAL SOIL

1. IF NRCS HYDROLOGIC SOIL GROUP IS A OR B, OR MEASURED SUBSOIL INFILTRATION RATE IS 0.5 IN/HR OR GREATER, STRUCTURAL SOIL MAY BE PLACED OVER UNCOMPACTED SUBGRADE.

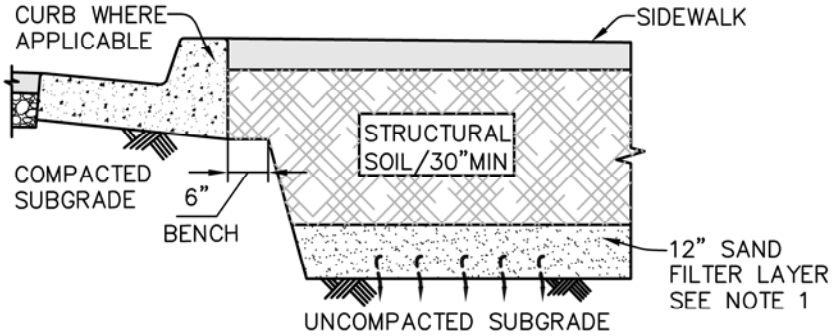

STRUCTURAL SOIL OVER SAND

2. IF NRCS HYDROLOGIC SOIL GROUP IS C, OR MEASURED SUBSOIL INFILTRATION RATE IS BETWEEN 0.14 AND 0.5 IN/HR, STRUCTURAL SOIL SHALL BE PLACED OVER 12 IN OF SAND OVER UNCOMPACTED SUBGRADE.

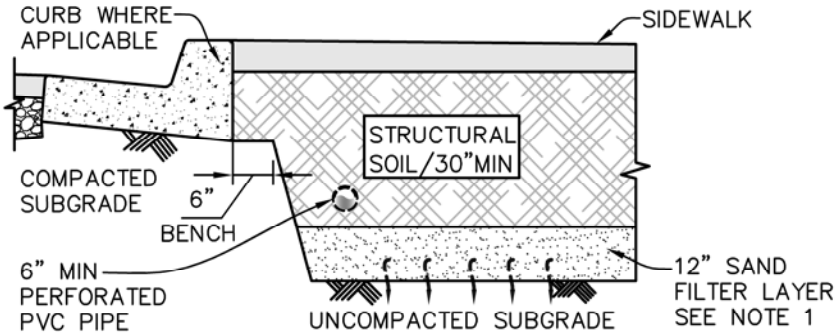

STRUCTURAL SOIL OVER SAND WITH UNDERDRAIN

3. IF NRCS HYDROLOGIC SOIL GROUP IS D, OR MEASURED SUBSOIL INFILTRATION RATE IS LESS THAN 0.14 IN/HR, PERFORATED 6" MINIMUM PVC UNDERDRAIN PIPE SHALL BE EMBEDDED IN SAND FILTER OR STRUCTURAL SOIL LAYER AND CONNECTED TO THE STORM DRAINAGE SYSTEM.

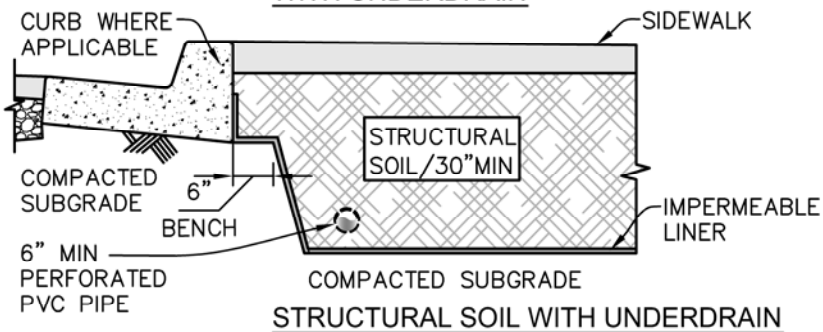

STRUCTURAL SOIL WITH UNDERDRAIN AND IMPERMEABLE LINER

4. IF NRCS HYDROLOGIC SOIL GROUP HAS NO SIGNIFICANT INFILTRATION CHARACTERISTICS OR THE SUBGRADE IS CONTAMINATED, PERFORATED 6" MINIMUM PVC UNDERDRAIN PIPE SHALL BE EMBEDDED ON IMPERMEABLE LINEAR OVER COMPACTED SUBGRADE AND CONNECTED TO THE STORM DRAINAGE SYSTEM.

NOTES:

1. SAND SHALL BE PER THE GREEN STREET "ENGINEERED SOIL" SPECIFICATIONS SECTION B–3.

DRAWING NOT TO SCALE

DRAWN BY: M.M.	CHECKED BY: S.W.K.	SAN DIEGO COUNTY DESIGN STANDARD	REVISIONS	APPROVED	DATE
RECOMMENDED BY: STUART W. KUHN, P.E.					
APPROVED BY COUNTY ENGINEER		TREE WELL WITH STRUCTURAL SOIL SUBSURFACE DRAINAGE OPTIONS			
DATE:			DRAWING NUMBER	GS-1.5	
DEYLAMIAN SIROUS, P.E. R.C.E. NO. 53192, EXP 6/30/2017					

NOTE: THIS DRAWING IS TO BE INCLUDED ON PLANS UNTIL SIGNED BY THE COUNTY ENGINEER. ONCE SIGNED, IT CAN BE REFERENCED BY NUMBER

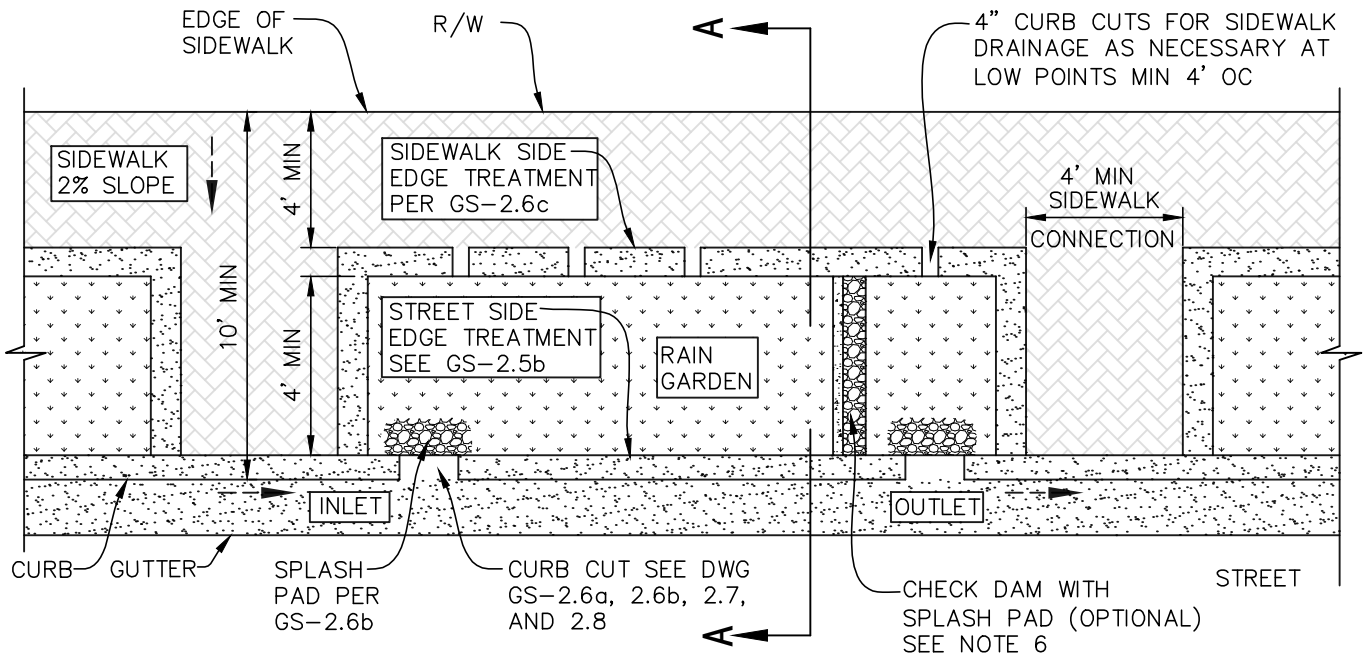

PLAN VIEW

NOTES:

1. CHOKER LAYER IS OPTIONAL PER GEOTECHNICAL ENGINEER RECOMMENDATION.
2. MATERIALS AND CONSTRUCTION SHALL MEET CURRENT SPECIFICATION FOR PLANTING AND ENGINEERED SOIL MEDIA.
3. PLANTINGS SHALL BE INSTALLED IN ACCORDANCE WITH DESIGN PLAN.
4. BOTTOM OF RAIN GARDEN SHALL BE AT LEAST 10' ABOVE THE SEASONAL HIGH WATER TABLE OR 2' ABOVE BEDROCK, AS DETERMINED BY GEOTECHNICAL INVESTIGATION.
5. DEPTH OF INFILTRATION SUMP AS SHOWN ON DESIGN PLANS SHALL BE SIZED TO ADDRESS STORMWATER MANAGEMENT REQUIREMENTS.
6. CHECK DAM SHALL BE SPECIFIED AS NECESSARY PER GS-4.1 OR GS-4.2

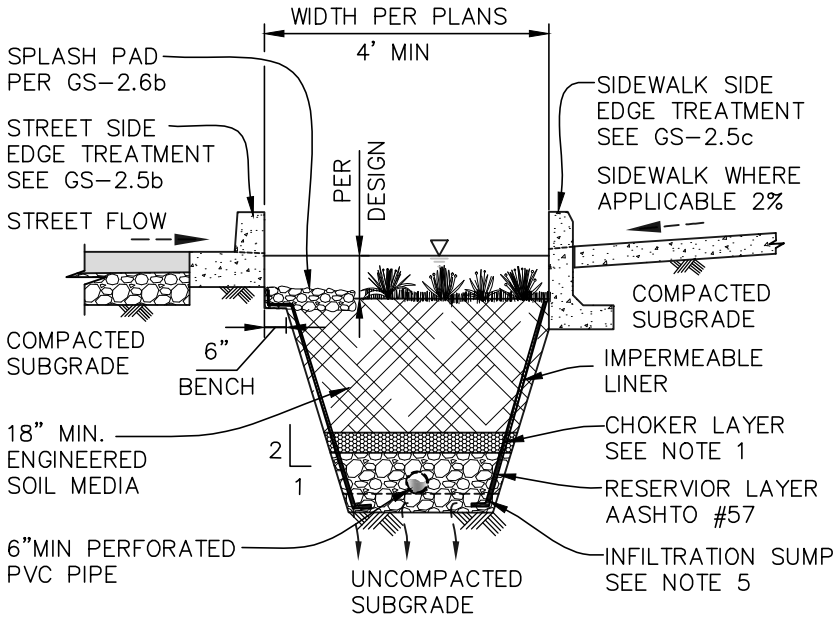

SECTION A-A

DRAWING NOT TO SCALE

DRAWN BY:____	CHECKED BY:____	SAN DIEGO COUNTY DESIGN STANDARD	REVISIONS	APPROVED	DATE
RECOMMENDED BY: JEFF S. MOODY, P.E.					
APPROVED BY COUNTY ENGINEER		RAIN GARDEN PLANTER ADJACENT TO ROADWAY-1 (NO STEP OUT ZONE)			
____ DATE: ____ DEYLAMIAN SIROUS, P.E. R.C.E. NO. 53192, EXP 6/30/2017			DRAWING NUMBER	GS-2.1	

NOTE: THIS DRAWING IS TO BE INCLUDED ON PLANS UNTIL SIGNED BY THE COUNTY ENGINEER. ONCE SIGNED, IT CAN BE REFERENCED ON PLANS

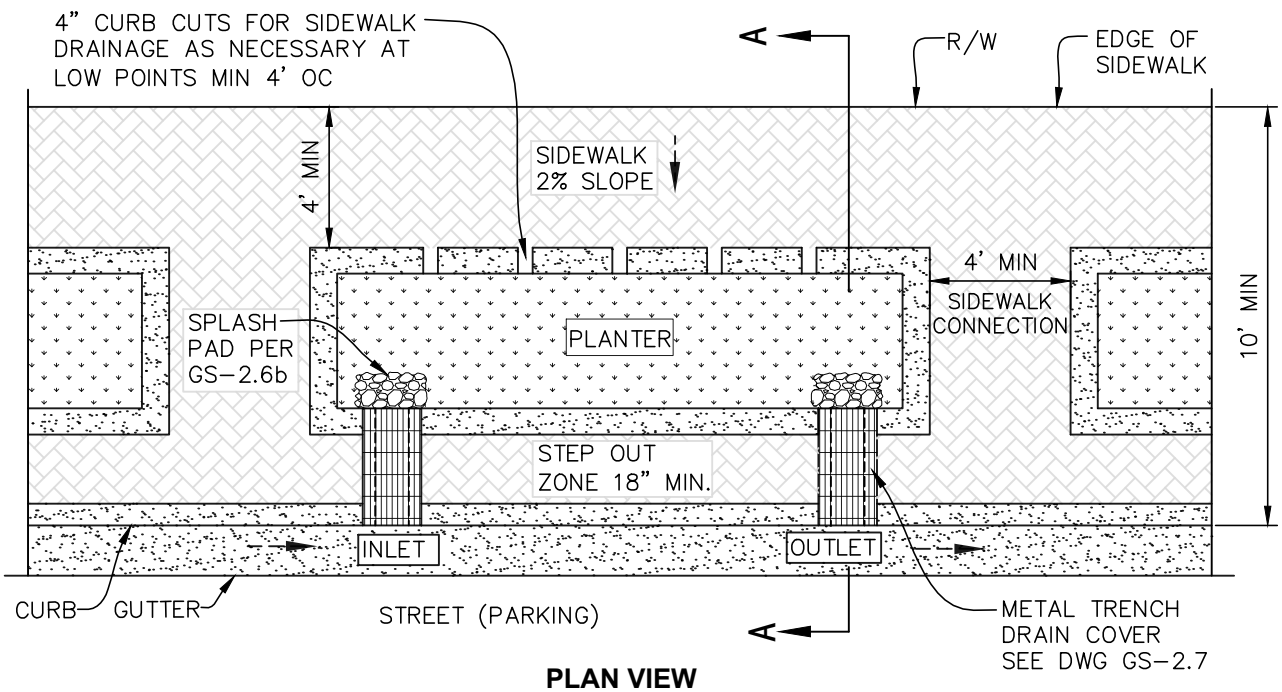

PLAN VIEW

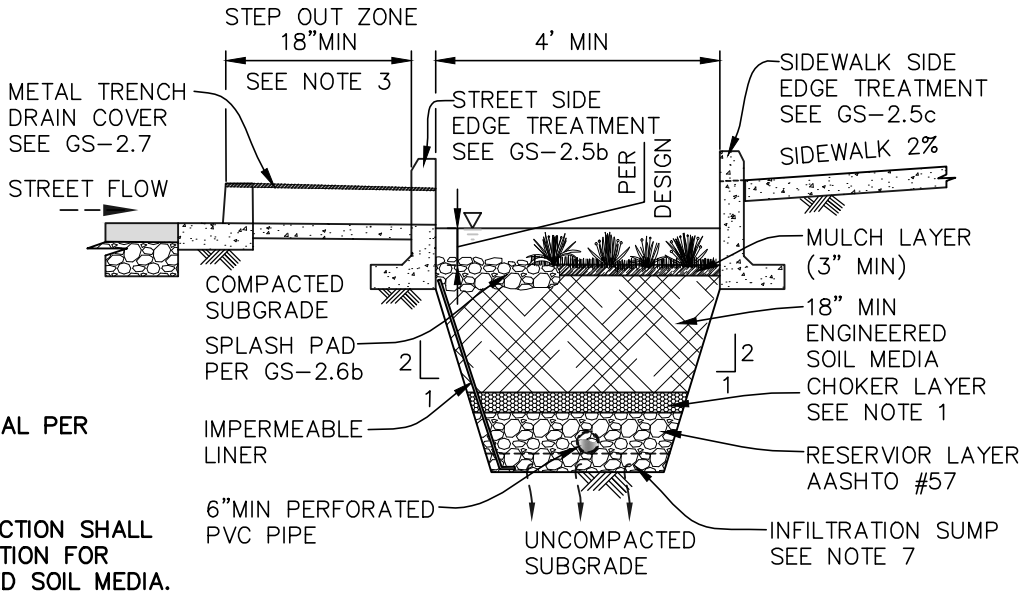

SECTION A-A

NOTES:

1. CHOKER LAYER IS OPTIONAL PER GEOTECHNICAL ENGINEER RECOMMENDATION.
2. MATERIALS AND CONSTRUCTION SHALL MEET CURRENT SPECIFICATION FOR PLANTING AND ENGINEERED SOIL MEDIA.
3. STEP OUT ZONE REQUIRED WHEN PARALLEL PARKING IS PROVIDED. INSTALLATION MAY BE STANDARD CONCRETE SIDEWALK OR PAVEMENT BASED ON SURROUNDING CONDITIONS.
4. FOR EDGE TREATMENT OPTIONS SEE DWG GS-2.5
5. PLANTINGS SHALL BE INSTALLED IN ACCORDANCE WITH DESIGN PLAN.
6. BOTTOM OF RAIN GARDEN SHALL BE AT LEAST 10' ABOVE THE SEASONAL HIGH WATER TABLE OR 2' ABOVE BEDROCK, AS DETERMINED BY GEOTECHNICAL INVESTIGATION.
7. DEPTH OF INFILTRATION SUMP AS SHOWN ON DESIGN PLANS SHOULD BE SIZED TO ADDRESS STORMWATER MANAGEMENT REQUIREMENTS.
8. OUTLET REQUIRED AS SPECIFIED BY PLANS.

DRAWING NOT TO SCALE

DRAWN BY:____	CHECKED BY:____	SAN DIEGO COUNTY DESIGN STANDARD	REVISIONS	APPROVED	DATE
RECOMMENDED BY: JEFF S. MOODY, P.E.					
APPROVED BY COUNTY ENGINEER		RAIN GARDEN PLANTER ADJACENT TO ROADWAY-2 (WITH STEP OUT ZONE)			
_____ DATE: _____ DEYLAMIAN SIROUS, P.E. R.C.E. NO. 53192, EXP 6/30/2017			DRAWING NUMBER	GS-2.2	

NOTE: THIS DRAWING IS TO BE INCLUDED ON PLANS UNTIL SIGNED BY THE COUNTY ENGINEER. ONCE SIGNED, IT CAN BE REFERENCED BY NUMBER

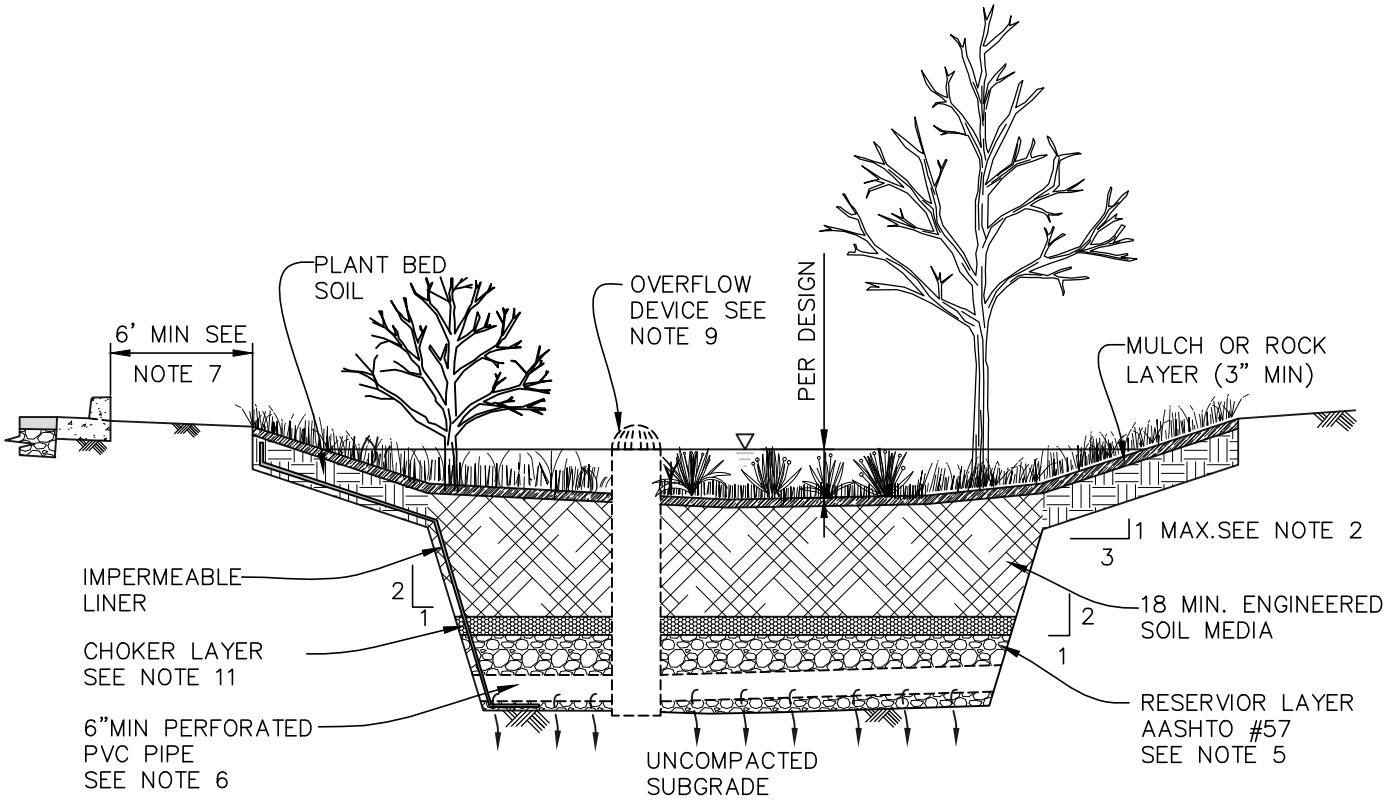

ELEVATION

NOTES:

1. MATERIALS AND CONSTRUCTION SHALL MEET CURRENT APPROVED COUNTY SPECIFICATION FOR PLANTING AND ENGINEERED SOIL MEDIA.
2. SIDE SLOPES STEEPER THAN 3:1 MAY BE ALLOWED WITH COUNTY APPROVAL.
3. FOR ALTERNATIVE EDGE TREATMENT CONDITIONS, SEE DWG GS-2.5.
4. BOTTOM OF RAIN GARDEN SHALL BE AT LEAST 10' ABOVE THE SEASONAL HIGH WATER TABLE OR 2' ABOVE BEDROCK, AS DETERMINED BY GEOTECHNICAL INVESTIGATION.
5. RESERVOIR LAYER DEPTH SHALL VARY PER DESIGN PLANS, TO ACHIEVE A WATER STORAGE LAYER/ INFILTRATION SUMP WHEN APPLICABLE.
6. PROVIDE UNDERDRAIN WHEN CALLED FOR PER DESIGN PLANS, SEE DWG GS-6.3 FOR MINIMUM BEDDING REQUIREMENT.
7. DISTANCE TO ROADWAY MAY BE REDUCED WHEN THE SIDE IS LINED WITH IMPERMEABLE LINER, PER DESIGN PLANS.
8. SEE GS-6.2 FOR CLEAN OUT AND OBSERVATION WELL DETAIL.
9. RAIN GARDEN FACILITY DEPICTED IS ONE WITH AN OVERFLOW STRUCTURE. "OFF-LINE" FACILITIES DESIGNED TO LIMIT INFLOW SO THAT OVERFLOW STRUCTURES ARE NOT REQUIRED ARE ALSO PERMISSIBLE, AS SHOWN ON DESIGN PLANS; OUTFALL/ OVERFLOW ELEVATION 2" MIN BELOW SIDEWALK.
10. IF DEPTH FROM SURROUNDING GRADE TO LOW POINT OF FACILITY EXCEEDS 5 FEET, A FENCE IS REQUIRED AROUND ENTIRE FACILITY.
11. CHOKER LAYER IS OPTIONAL PER GEOTECHNICAL ENGINEER RECOMMENDATION.

DRAWING NOT TO SCALE

DRAWN BY:____	CHECKED BY:____	SAN DIEGO COUNTY DESIGN STANDARD	REVISIONS	APPROVED	DATE
RECOMMENDED BY: JEFF S. MOODY, P.E.					
APPROVED BY COUNTY ENGINEER		RAIN GARDEN IN OPEN AREA			
_____ DATE: _____ DEYLAMIAN SIROUS, P.E. R.C.E. NO. 53192, EXP 6/30/2017			DRAWING NUMBER	GS-2.3	

NOTE: THIS DRAWING IS TO BE INCLUDED ON PLANS UNTIL SIGNED BY THE COUNTY ENGINEER. ONCE SIGNED, IT CAN BE REFERENCED BY NUMBER

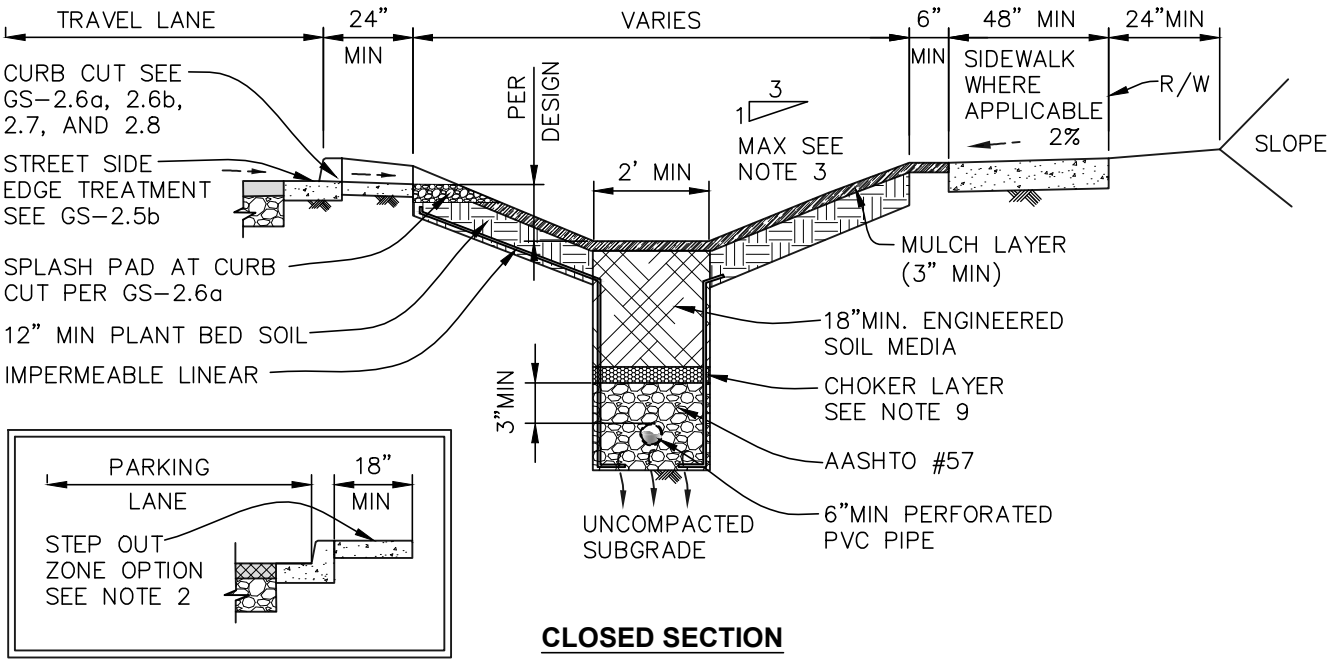

CLOSED SECTION

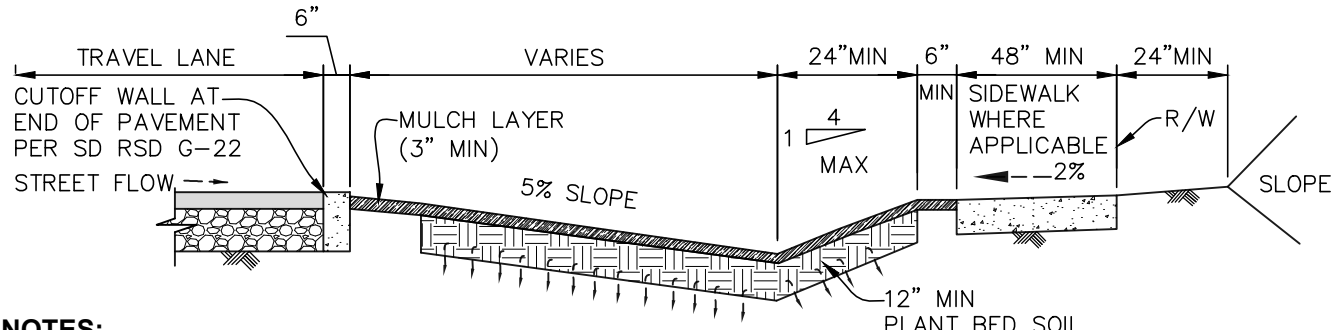

OPEN SECTION

NOTES:

1. MATERIALS AND CONSTRUCTION SHALL MEET CURRENT APPROVED COUNTY SPECIFICATION FOR PLANTING AND ENGINEERED SOIL MEDIA.
2. STEP OUT ZONE REQUIRED WHEN PARALLEL PARKING IS PROVIDED. INSTALLATION MAY BE STANDARD CONCRETE SIDEWALK OR PAVEMENT BASED ON SURROUNDING CONDITIONS.
3. SIDE SLOPES STEEPER THAN 3:1 MAY BE ALLOWED WITH COUNTY APPROVAL.
4. TREES AND PLANTS SHALL BE INSTALLED IN ACCORDANCE WITH DESIGN PLANS.
5. BOTTOM OF SWALES SHALL BE AT LEAST 10' ABOVE THE SEASONAL HIGH WATER TABLE OR 2' ABOVE BEDROCK, AS DETERMINED BY GEOTECHNICAL INVESTIGATION.
6. OFFSET TO SWALES MAY BE REDUCED IF ALTERNATIVE EDGE TREATMENT IS USED, SEE DWG GS-2.5
7. DEPTH OF INFILTRATION SUMP AS SHOWN ON DESIGN PLANS SHOULD BE SIZED TO ADDRESS STORMWATER REQUIREMENTS.
8. INSTALL TRAFFIC BARRIER AS NECESSARY BASED ON ROADWAY DESIGN.
9. CHOKER LAYER IS OPTIONAL PER GEOTECHNICAL ENGINEER RECOMMENDATION.

DRAWING NOT TO SCALE

DRAWN BY:____	CHECKED BY:____	SAN DIEGO COUNTY DESIGN STANDARD	REVISIONS	APPROVED	DATE
RECOMMENDED BY: JEFF S. MOODY, P.E.					
APPROVED BY COUNTY ENGINEER		**SWALES ADJACENT TO ROADWAY**			
_____ DATE: _____ DEYLAMIAN SIROUS, P.E. R.C.E. NO. 53192, EXP 6/30/2017			DRAWING NUMBER	**GS-2.4**	

NOTE: THIS DRAWING IS TO BE INCLUDED ON PLANS UNTIL SIGNED BY THE COUNTY ENGINEER. ONCE SIGNED, IT CAN BE REFERENCED BY NUMBER

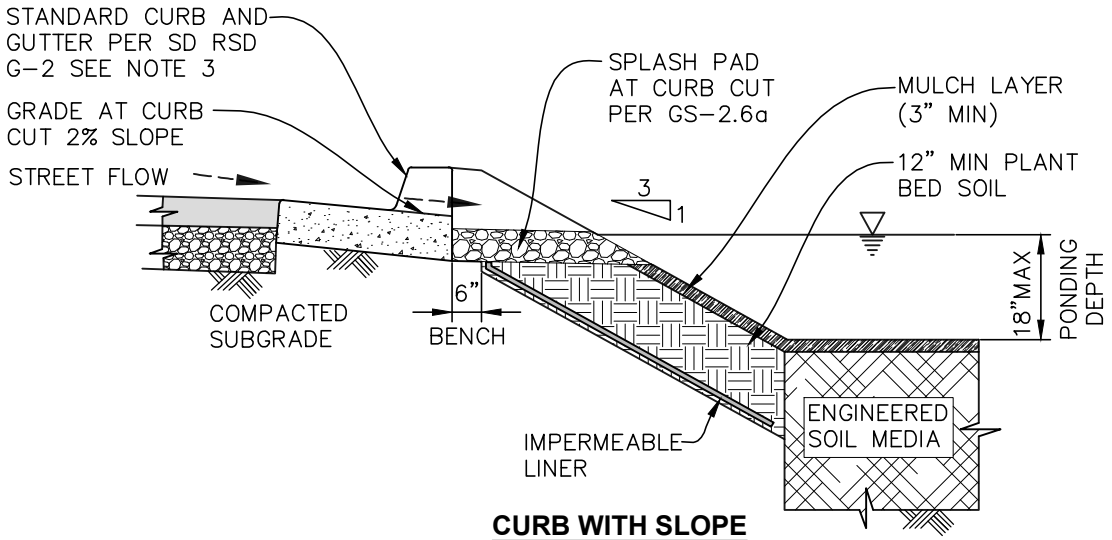

CURB WITH SLOPE

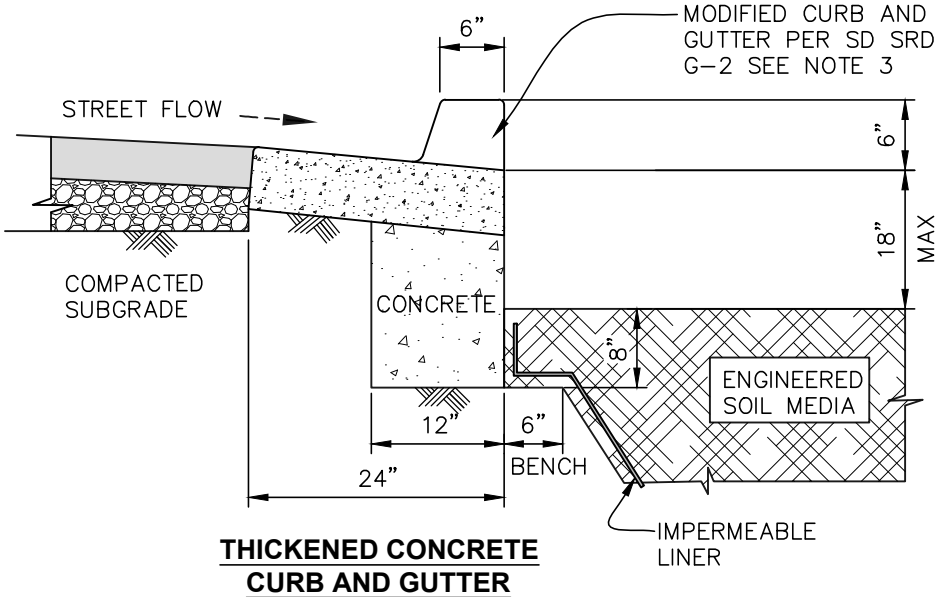

THICKENED CONCRETE CURB AND GUTTER

NOTES:

1. FINISH ALL EXPOSED CONCRETE SURFACES.
2. CURB TYPE AND MATERIAL TO MATCH PLANS.
3. SLOPE OF GUTTER AND CURB REVEAL TO MATCH STANDARD CURB AND GUTTER PER SD RSD DWG G-2.
4. EXPANSION AND CONTRACTION JOINTS SHALL BE PLACED IN ACCORDANCE WITH STANDARD CONCRETE CURB REQUIREMENTS.
5. PROVIDE AND MAINTAIN A SAFE PEDESTRIAN WALKWAY ACCESS THAT COMPLIES WITH APPLICABLE ADA STANDARDS AND SD SUPPLEMENT TO GREEN BOOK SEC 7-10 "PUBLIC CONVENIENCE AND SAFETY".

DRAWING NOT TO SCALE

DRAWN BY:____	CHECKED BY:____	SAN DIEGO COUNTY DESIGN STANDARD	REVISIONS	APPROVED	DATE
RECOMMENDED BY: JEFF S. MOODY, P.E.					
APPROVED BY COUNTY ENGINEER		STREET SIDE EDGE TREATMENT-1			
_____ DATE: _____ DEYLAMIAN SIROUS, P.E. R.C.E. NO. 53192, EXP 6/30/2017		(NO STEP OUT ZONE)	DRAWING NUMBER	GS-2.5a	

NOTE: THIS DRAWING IS TO BE INCLUDED ON PLANS UNTIL SIGNED BY THE COUNTY ENGINEER. ONCE SIGNED, IT CAN BE REFERENCED BY NUMBER

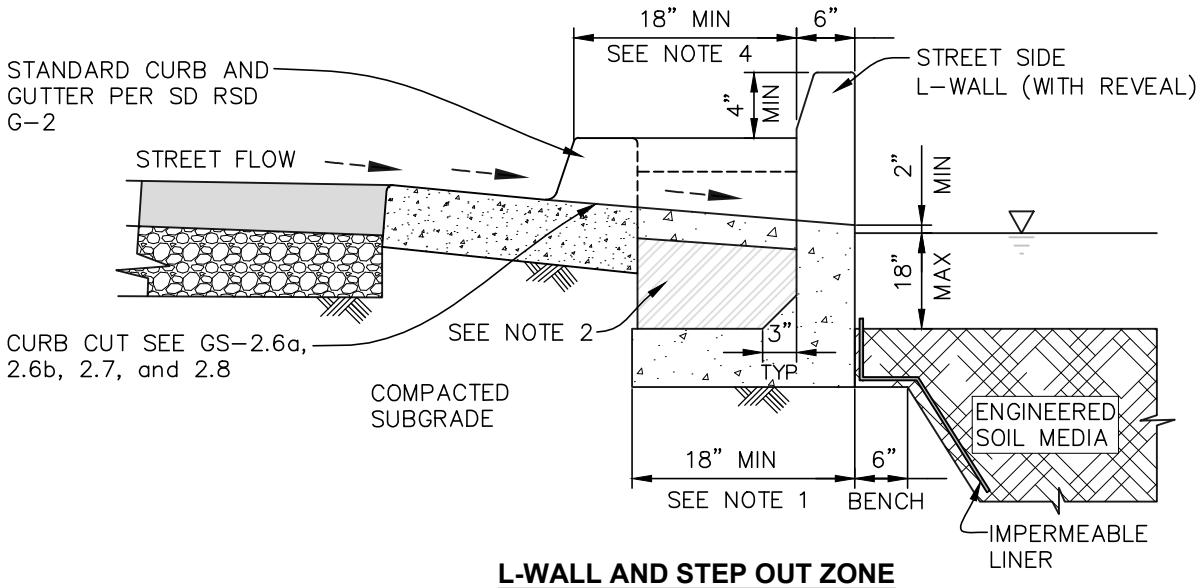

L-WALL AND STEP OUT ZONE

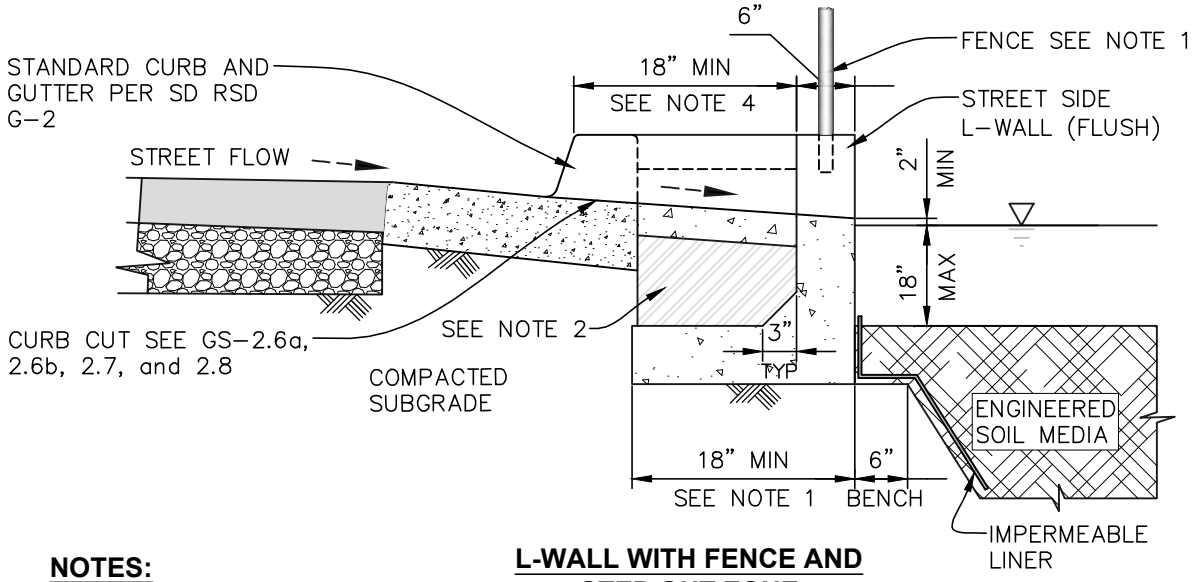

L-WALL WITH FENCE AND STEP OUT ZONE

NOTES:

1. WHEN FLUSH WALLS ARE SELECTED, TYPICALLY IN HIGH-VOLUME PEDESTRIAN AREAS, PROVIDE RAILING OR FENCE PER PLAN.
2. 18" BASE WIDTH MAY BE REDUCED TO 15" IF CONCRETE IS USED IN THE HATCHED AREA.
3. FINISH ALL EXPOSED CONCRETE SURFACES.
4. STEP OUT ZONE INSTALLATION MAY BE STANDARD CONCRETE SIDEWALK OR OTHER PAVEMENT AS SHOWN ON PLANS.
5. EXPANSION JOINTS SHALL BE PLACED AT MAXIMUM 90 FOOT INTERVAL. CONTRACTION JOINTS SHALL BE FORMED OR SAWED AT 30 FOOT MAXIMUM INTERVALS BETWEEN EXPANSION JOINTS. WHERE ADJACENT TO CURB, SIDEWALK OR CONCRETE PAVEMENT, JOINTS SHALL LINE UP.

DRAWING NOT TO SCALE

DRAWN BY:____	CHECKED BY:____	SAN DIEGO COUNTY DESIGN STANDARD	REVISIONS	APPROVED	DATE
RECOMMENDED BY: JEFF S. MOODY, P.E.					
APPROVED BY COUNTY ENGINEER		**STREET SIDE EDGE TREATMENT-2**			
____ DATE: ____					
DEYLAMIAN SIROUS, P.E. R.C.E. NO. 53192, EXP 6/30/2017		(WITH STEP OUT ZONE)	DRAWING NUMBER	**GS-2.5b**	

NOTE: THIS DRAWING IS TO BE INCLUDED ON PLANS UNTIL SIGNED BY THE COUNTY ENGINEER. ONCE SIGNED, IT CAN BE REFERENCED BY NUMBER

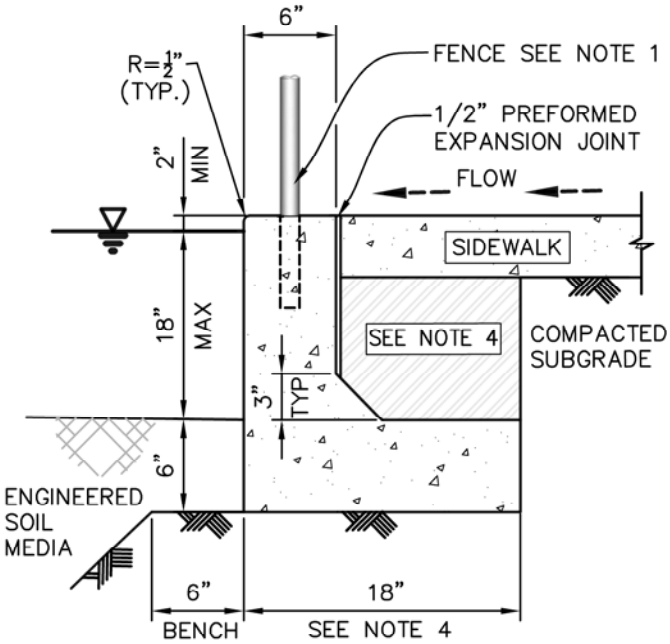

WITH PEDESTRIAN FENCE

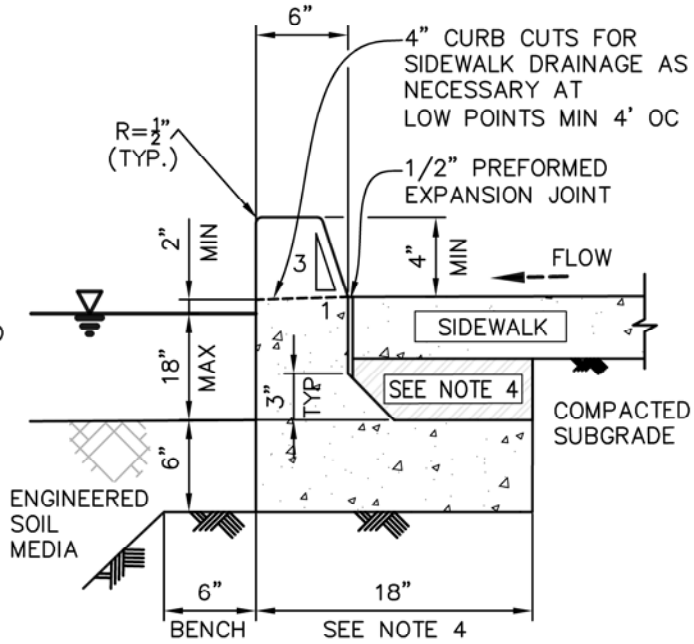

WITH CURB

NOTES:

1. WHEN FLUSH WALLS ARE SELECTED, TYPICALLY IN HIGH–VOLUME PEDESTRIAN AREAS, PROVIDE RAILING OR FENCE PER PLAN. FENCE TYPE, STYLE, AND FINISH TO BE APPROVED BY LOCAL PLANNING AUTHORITY.
2. WHEN WALLS WITH REVEALS ARE USED, TYPICALLY IN LOW–VOLUME PEDESTRIAN AREA, PROVIDE BREAKS IN REVEAL AS SHOWN ON PLANS TO ALLOW FOR SIDEWALK RUNOFF INTO STORMWATER MANAGEMENT FACILITY.
3. FINISH ALL EXPOSED CONCRETE SURFACES.
4. BASE WIDTH MAY BE REDUCED TO 15" IF CONCRETE IS USED IN THE HATCHED AREA.
5. EXPANSION JOINTS SHALL BE PLACED AT MAXIMUM 90 FOOT INTERVAL. CONTRACTION JOINTS SHALL BE FORMED OR SAWED AT 30 FOOT MAXIMUM INTERVALS BETWEEN EXPANSION JOINTS. WHERE ADJACENT TO CURB, SIDEWALK OR CONCRETE PAVEMENT, JOINTS SHALL LINE UP.

DRAWING NOT TO SCALE

DRAWN BY: M.M.	CHECKED BY: S.W.K.	SAN DIEGO COUNTY DESIGN STANDARD	REVISIONS / APPROVED / DATE
RECOMMENDED BY: STUART W. KUHN, P.E.			
APPROVED BY COUNTY ENGINEER		SIDEWALK SIDE EDGE TREATMENT	
DATE:			
SIROUS DEYLAMIAN, P.E. R.C.E. NO. 53192, EXP 6/30/2017			DRAWING NUMBER GS-2.5c

NOTE: THIS DRAWING IS TO BE INCLUDED ON PLANS UNTIL SIGNED BY THE COUNTY ENGINEER. ONCE SIGNED, IT CAN BE REFERENCED BY NUMBER

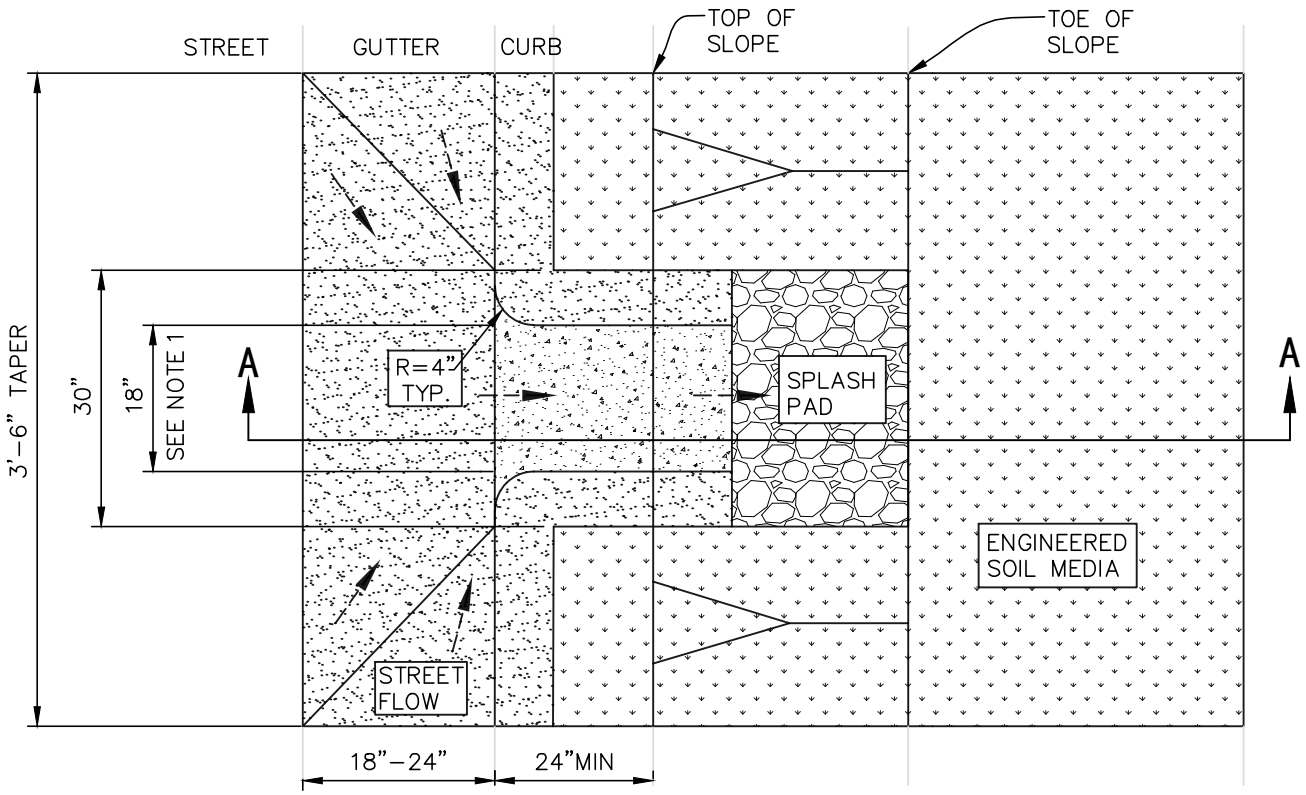

CONCRETE FLUME WITH WINGWALLS AND ROCK SPLASH PAD

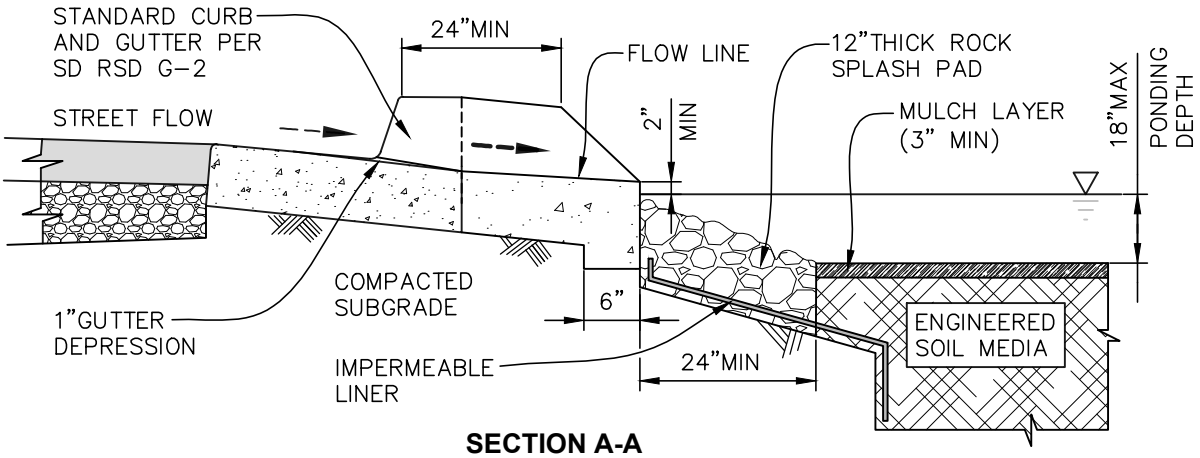

SECTION A-A

NOTES:

1. CURB OPENING DIMENSION SHOWN IS A MINIMUM. CURB CUT SHALL BE SIZED TO CONVEY 85TH PERCENTILE RAINFALL.
2. SEE DWG GS-2.8 FOR METAL TRENCH DRAIN COVER CURB CUT.
3. SIDE SLOPES STEEPER THAN 3:1 MAY BE ALLOWED WITH COUNTY APPROVAL.

DRAWING NOT TO SCALE

DRAWN BY:____	CHECKED BY:____	SAN DIEGO COUNTY DESIGN STANDARD	REVISIONS	APPROVED	DATE
RECOMMENDED BY: JEFF S. MOODY, P.E.					
APPROVED BY COUNTY ENGINEER		CURB CUT WITH SPLASH PAD - 1			
_____ DATE: _____ DEYLAMIAN SIROUS, P.E. R.C.E. NO. 53192, EXP 6/30/2017			DRAWING NUMBER	GS-2.6a	

NOTE: THIS DRAWING IS TO BE INCLUDED ON PLANS UNTIL SIGNED BY THE COUNTY ENGINEER. ONCE SIGNED, IT CAN BE REFERENCED BY NUMBER

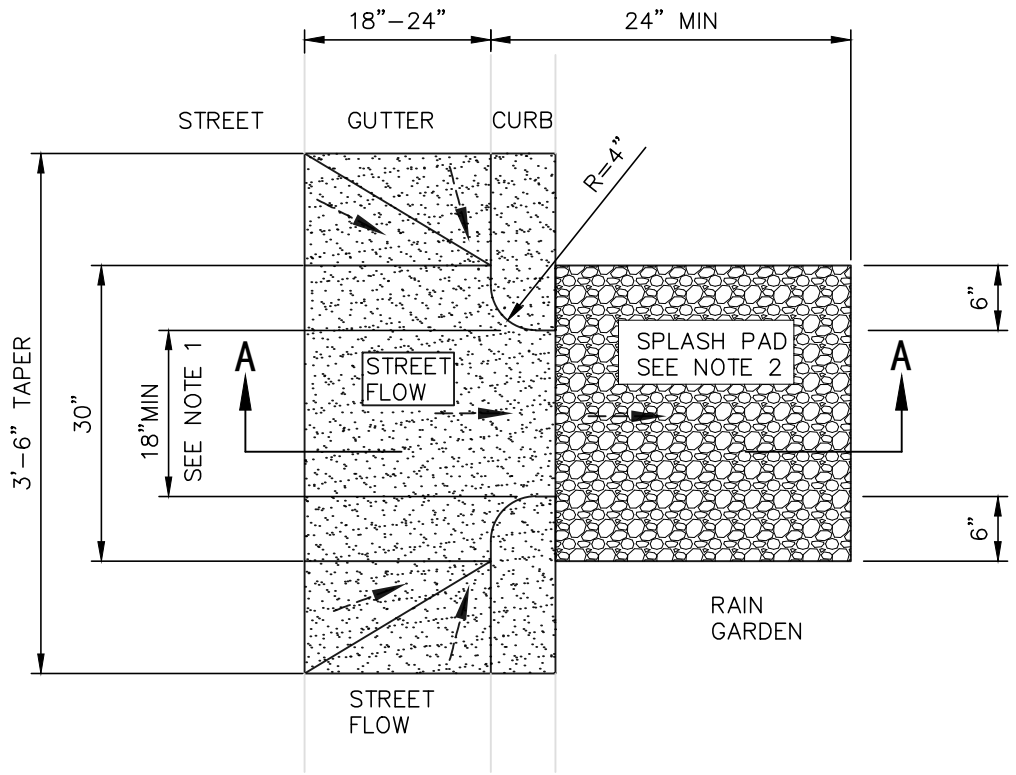

CONCRETE FLUME WITH ROCK SPLASH PAD

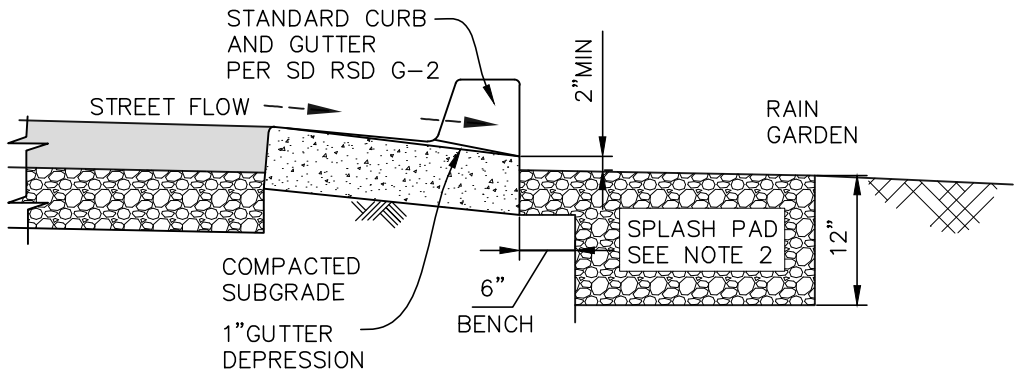

SECTION A-A

NOTES:

1. CURB OPENING DIMENSION SHOWN IS A MINIMUM. CURB CUT SHALL BE SIZED TO CONVEY 85TH PERCENTILE RAINFALL.

2. SPLASH PAD THICKNESS OPTIONS: 12" STONE #2, 4" CONCRETE SLAB, OR PAVER BLOCKS ON 6" AGGREGATE AASHTO #57.

DRAWING NOT TO SCALE

DRAWN BY:____	CHECKED BY:____	SAN DIEGO COUNTY DESIGN STANDARD	REVISIONS	APPROVED	DATE
RECOMMENDED BY: JEFF S. MOODY, P.E.					
APPROVED BY COUNTY ENGINEER		CURB CUT WITH SPLASH PAD – 2			
_____ DATE: _____ DEYLAMIAN SIROUS, P.E. R.C.E. NO. 53192, EXP 6/30/2017			DRAWING NUMBER	GS-2.6b	

NOTE: THIS DRAWING IS TO BE INCLUDED ON PLANS UNTIL SIGNED BY THE COUNTY ENGINEER. ONCE SIGNED, IT CAN BE REFERENCED BY NUMBER

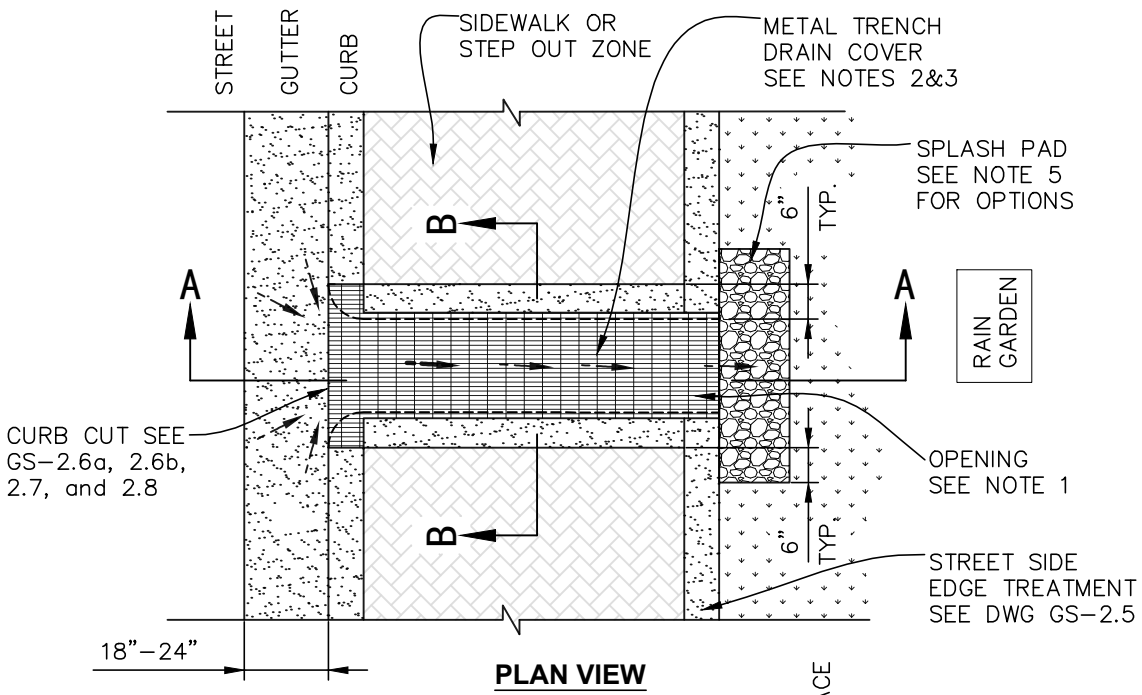

PLAN VIEW

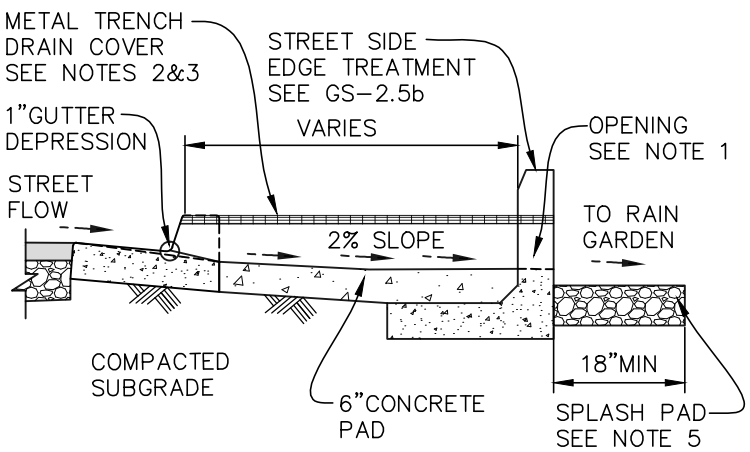

SECTION A-A

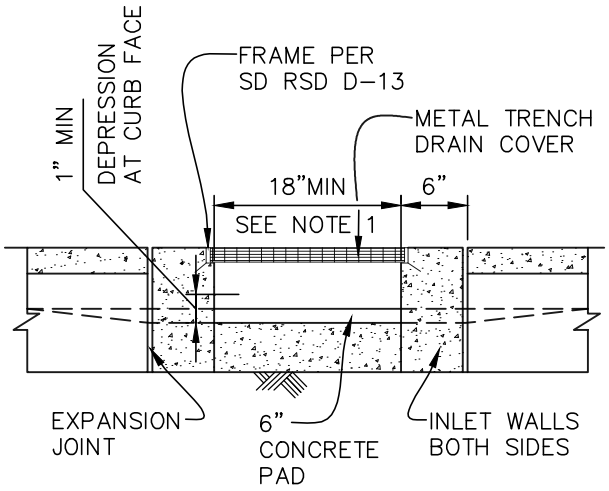

SECTION B-B

NOTES:

1. CURB OPENING DIMENSION SHOWN IS 18" MINIMUM. CURB CUT SHALL BE SIZED TO CONVEY 85TH PERCENTILE RAINFALL.
2. PROVIDE AND MAINTAIN A SAFE PEDESTRIAN WALKWAY ACCESS THAT COMPLIES WITH APPLICABLE ADA STANDARDS AND SD SUPPLEMENT TO GREEN BOOK SEC 7-10 "PUBLIC CONVENIENCE AND SAFETY".
3. REFER TO DESIGN PLANS FOR SIZE AND TYPE OF COVER.
4. METAL TRENCH DRAIN COVER TO BE BOLTED DOWN (THEFT PROTECTED) BUT REMOVABLE.
5. SPLASH PAD DEPTH OPTIONS: 12" STONE #2, 4" CONCRETE SLAB, OR PAVER BLOCKS ON 6" AGGREGATE AASHTO #57.

DRAWING NOT TO SCALE

DRAWN BY:____	CHECKED BY:____	SAN DIEGO COUNTY DESIGN STANDARD	REVISIONS	APPROVED	DATE
RECOMMENDED BY: JEFF S. MOODY, P.E.					
APPROVED BY COUNTY ENGINEER		**CURB CUT METAL TRENCH COVER**			
____ DATE: ____ DEYLAMIAN SIROUS, P.E. R.C.E. NO. 53192, EXP 6/30/2017			DRAWING NUMBER	**GS-2.7**	

NOTE: THIS DRAWING IS TO BE INCLUDED ON PLANS UNTIL SIGNED BY THE COUNTY ENGINEER. ONCE SIGNED, IT CAN BE REFERENCED BY NUMBER

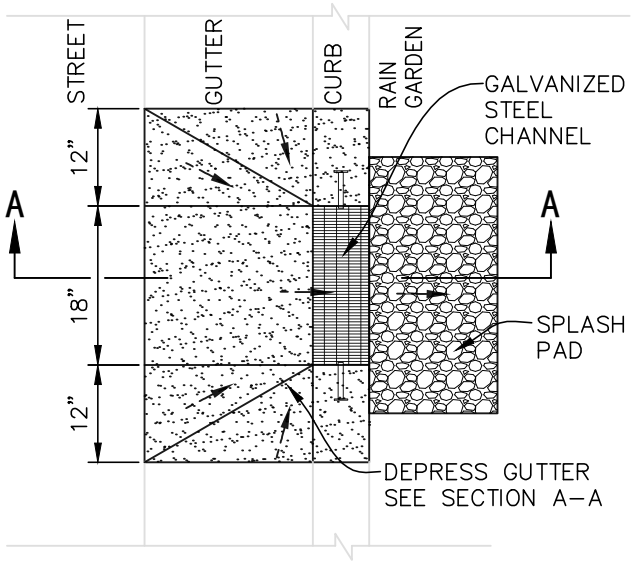

PLAN VIEW

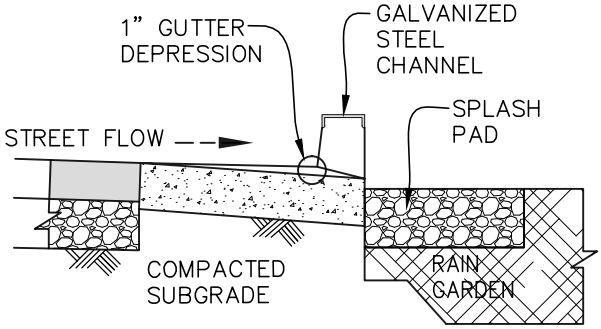

SECTION A-A

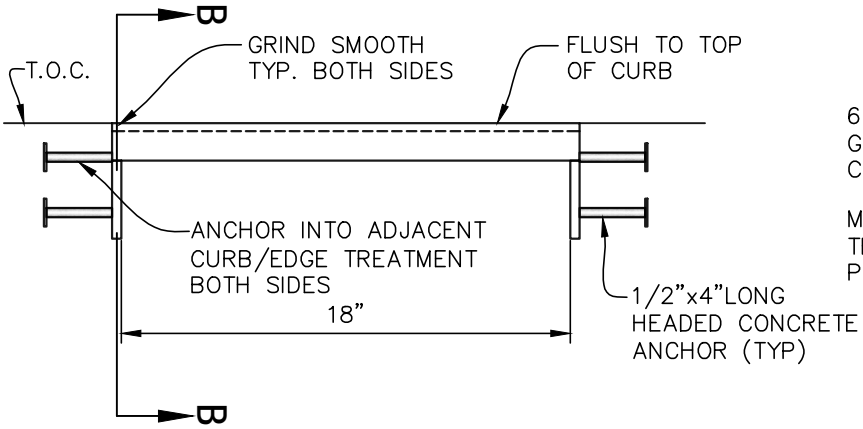

ELEVATION

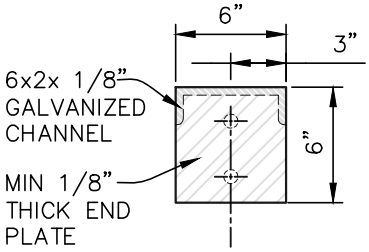

SECTION B-B

NOTES:

1. METAL COVER OVER CURB CUT MAY BE OMITTED WITH COUNTY APPROVAL.
2. ENTIRE ASSEMBLY SHALL BE HOT DIP GALVANIZED STEEL IN ACCORDANCE WITH ASTM A–123.
3. SHARP POINTS, CORNERS AND EDGES OF METAL COVER SHALL BE POLISHED SMOOTH.
4. SINGLE BEVEL GROOVE WELD.
5. DESIGN VERTICAL WHEEL LOAD IS 8.5 KIPS ONE HALF OF TANDEM AXLE WEIGHT SPECIFIED IN FHWA HOP–06–105).
6. ALTERNATE MATERIAL FOR ASSEMBLY MAY BE USED PER COUNTY APPROVAL.

DRAWING NOT TO SCALE

DRAWN BY:____	CHECKED BY:____	SAN DIEGO COUNTY DESIGN STANDARD	REVISIONS	APPROVED	DATE
RECOMMENDED BY: JEFF S. MOODY, P.E.					
APPROVED BY COUNTY ENGINEER		GALVANIZED STEEL CHANNEL OVER CURB CUT			
____ DATE: ____ DEYLAMIAN SIROUS, P.E. R.C.E. NO. 53192, EXP 6/30/2017			DRAWING NUMBER	GS-2.8	

NOTE: THIS DRAWING IS TO BE INCLUDED ON PLANS UNTIL SIGNED BY THE COUNTY ENGINEER. ONCE SIGNED, IT CAN BE REFERENCED BY NUMBER

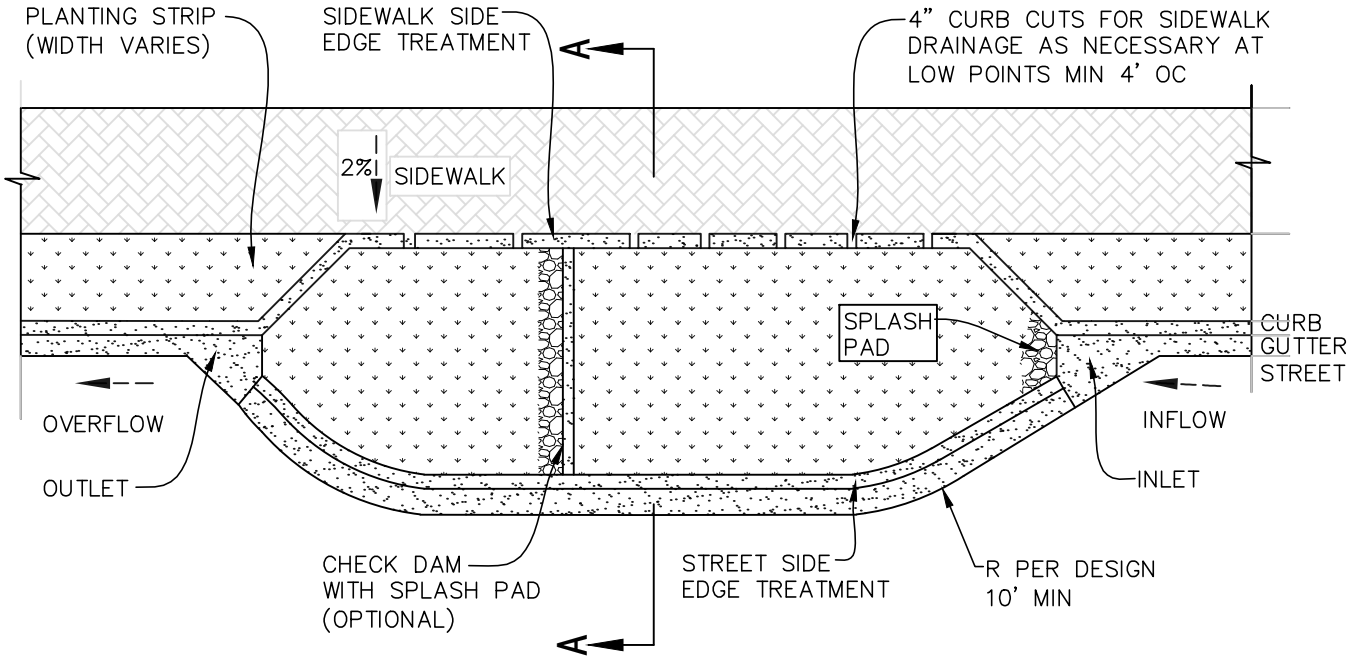

IN-PLANTING STRIP
PLAN VIEW

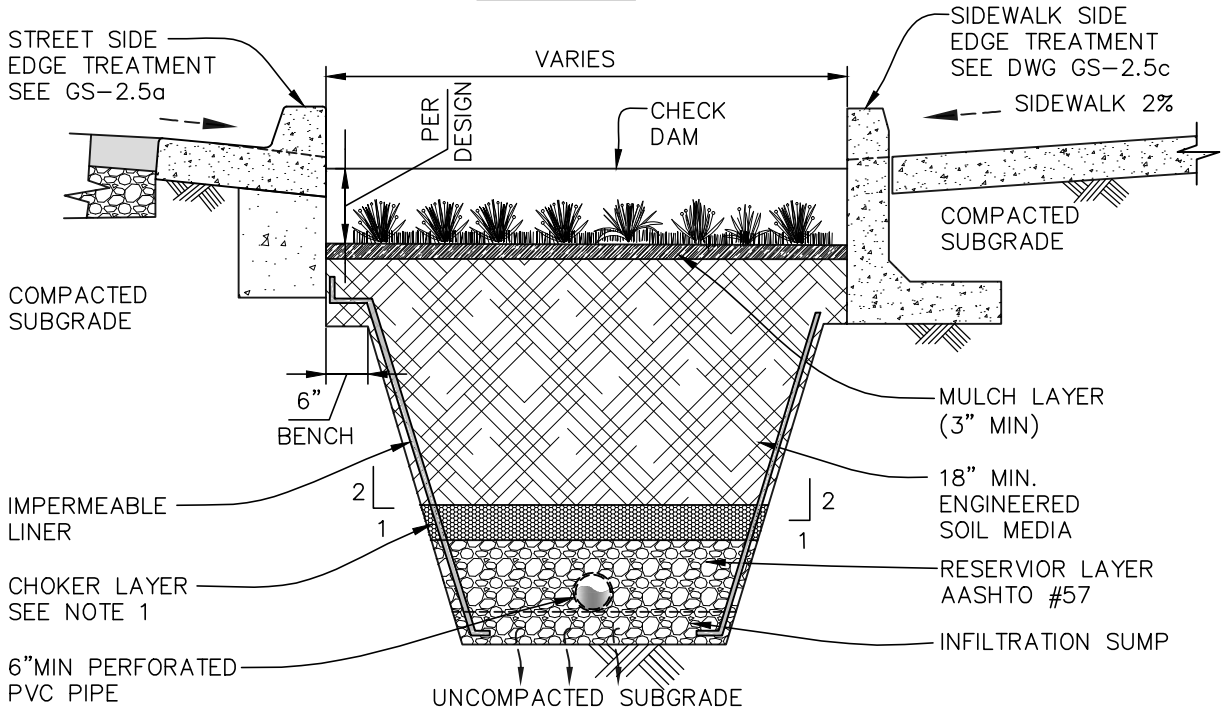

SECTION A-A
(WALL OPTION)

NOTES:

1. CHOKER LAYER IS OPTIONAL PER GEOTECHNICAL ENGINEER RECOMMENDATION.

DRAWING NOT TO SCALE

DRAWN BY:____	CHECKED BY:____	SAN DIEGO COUNTY DESIGN STANDARD	REVISIONS	APPROVED	DATE
RECOMMENDED BY: JEFF S. MOODY, P.E.					
APPROVED BY COUNTY ENGINEER		**CURB EXTENSION ADJACENT TO PLANTING STRIP**			
_____ DATE: _____ DEYLAMIAN SIROUS, P.E. R.C.E. NO. 53192, EXP 6/30/2017			DRAWING NUMBER	**GS-3.1a**	

NOTE: THIS DRAWING IS TO BE INCLUDED ON PLANS UNTIL SIGNED
BY THE COUNTY ENGINEER. ONCE SIGNED, IT CAN BE REFERENCED BY NUMBER

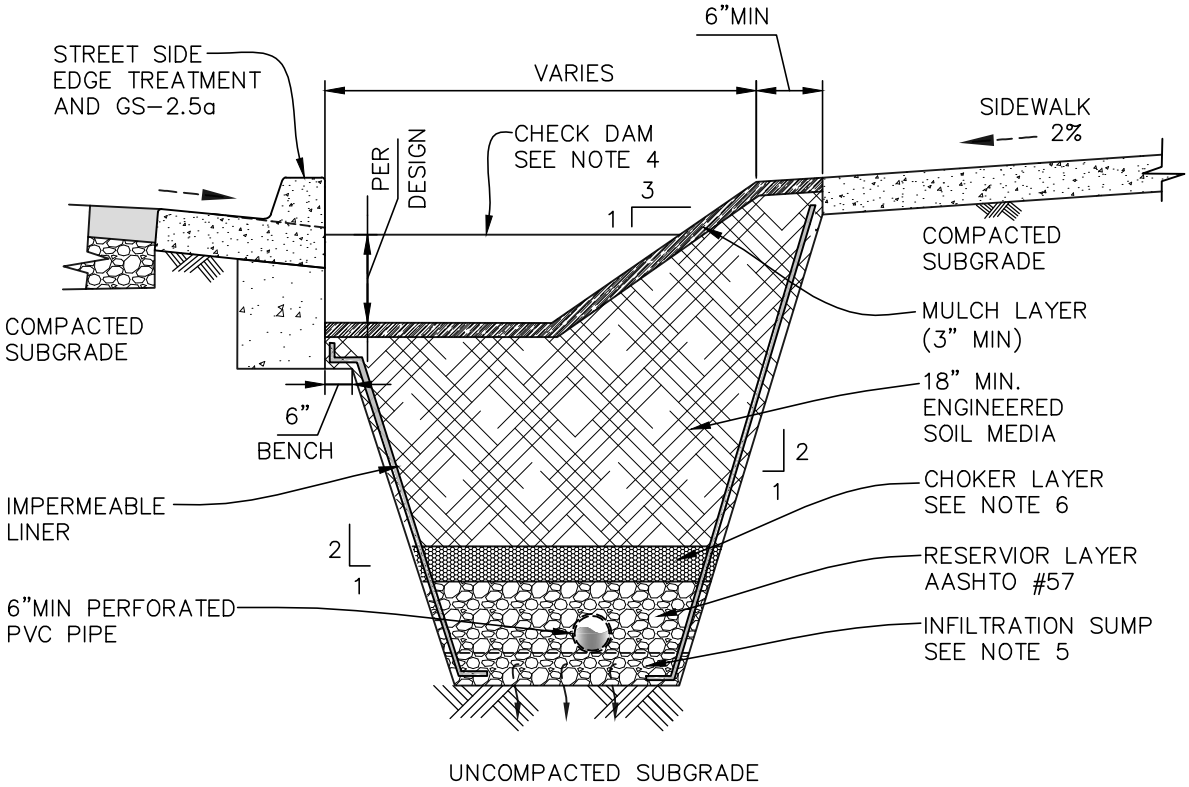

SECTION A-A
(SLOPE OPTION)

NOTES:

1. LONGITUDINAL SLOPE OF PLANTER MATCHES ROAD OR FLATTER AS REQUIRED PER DESIGN PLANS.
2. SIDEWALK ELEVATION MUST BE SET ABOVE INLET AND OUTLET ELEVATIONS TO ALLOW OVERFLOW TO DRAIN TO STREET BEFORE PONDING LEVEL REACHES SIDEWALK.
3. SEE DWG GS-3.2c FOR INLET AND OUTLET DETAILS.
4. CHECK DAMS REQUIRED AS PER DESIGN PLANS SEE DWG GS-4.1 THRU GS-4.3
5. DEPTH OF INFILTRATION SUMP AS SHOWN ON DESIGN PLANS SHOULD BE SIZED TO ADDRESS STORMWATER MANAGEMENT REQUIREMENTS.
6. CHOKER LAYER IS OPTIONAL PER GEOTECHNICAL ENGINEER RECOMMENDATION.

DRAWING NOT TO SCALE

DRAWN BY:____	CHECKED BY:____	SAN DIEGO COUNTY DESIGN STANDARD	REVISIONS	APPROVED	DATE
RECOMMENDED BY: JEFF S. MOODY, P.E.					
APPROVED BY COUNTY ENGINEER		CURB EXTENSION ADJACENT TO PLANTING STRIP			
_____ DATE: _____ DEYLAMIAN SIROUS, P.E. R.C.E. NO. 53192, EXP 6/30/2017			DRAWING NUMBER	GS-3.1b	

NOTE: THIS DRAWING IS TO BE INCLUDED ON PLANS UNTIL SINGNED BY THE COUNTY ENGINEER. ONCE SIGNED, IT CAN BE REFERENCED BY NUMBER

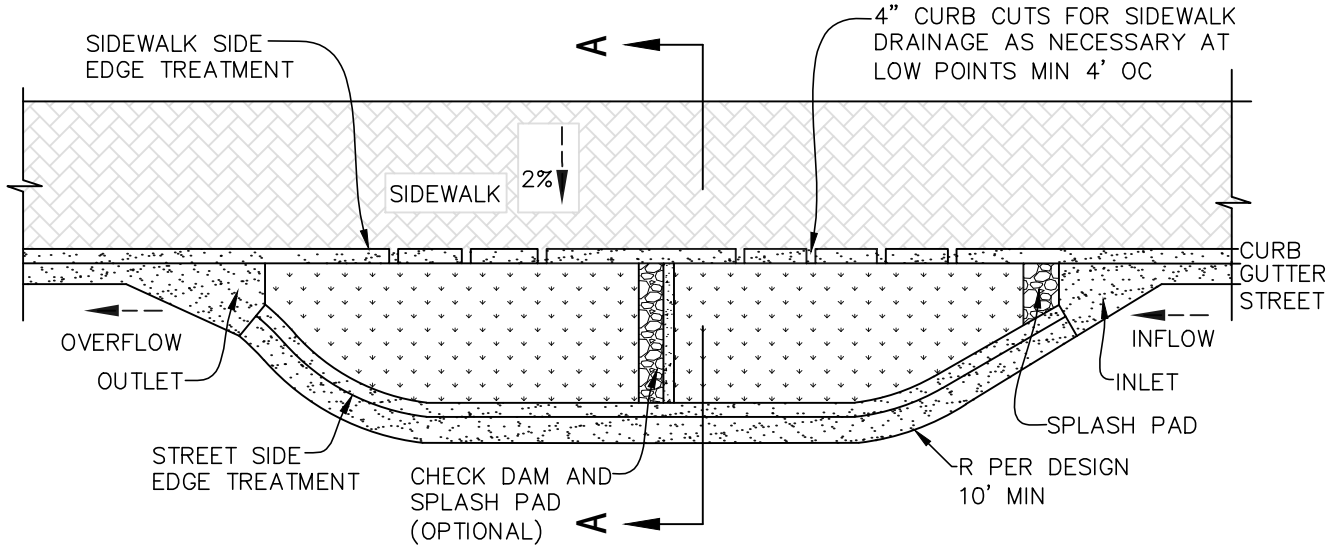

IN-STREET PLAN VIEW

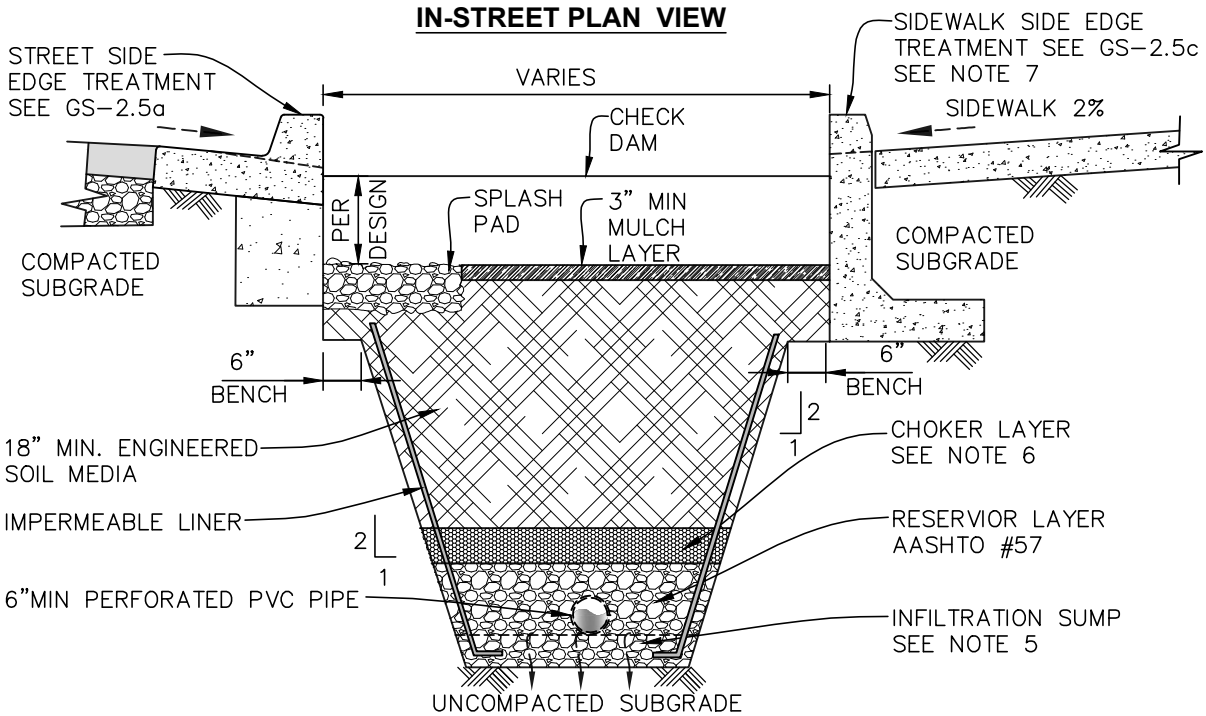

SECTION A-A

NOTES:

1. LONGITUDINAL SLOPE OF PLANTER MATCHES ROAD OR FLATTER AS REQUIRED PER DESIGN PLANS.
2. SIDEWALK ELEVATION MUST BE SET ABOVE INLET AND OUTLET ELEVATIONS TO ALLOW OVERFLOW TO DRAIN TO STREET BEFORE PONDING LEVEL REACHES SIDEWALK.
3. SEE GS-3.3 FOR INLET AND OUTLET DETAILS.
4. CHECK DAMS REQUIRED AS PER DESIGN PLANS SEE S-4.1a, 4.1b. 4.2a, AND 4.2b.
5. DEPTH OF INFILTRATION SUMP AS SHOWN ON DESIGN PLANS SHOULD BE SIZED TO ADDRESS STORMWATER MANAGEMENT REQUIREMENTS.
6. CHOKER LAYER IS OPTIONAL PER GEOTECHNICAL ENGINEER RECOMMENDATION.
7. A 3 TO 1 SLOPE MAY BE USED IN LIEU OF THE L-WALL WHERE ADEQUATE SPACE IS AVAILABLE SEE GS-3.1b.

DRAWING NOT TO SCALE

DRAWN BY:____	CHECKED BY:____	SAN DIEGO COUNTY DESIGN STANDARD	REVISIONS	APPROVED	DATE
RECOMMENDED BY: JEFF S. MOODY, P.E.					
APPROVED BY COUNTY ENGINEER		CURB EXTENSION ADJACENT TO SIDEWALK			
_____ DATE: _____ DEYLAMIAN SIROUS, P.E. R.C.E. NO. 53192, EXP 6/30/2017			DRAWING NUMBER	GS-3.2	

NOTE: THIS DRAWING IS TO BE INCLUDEED ON PLANS UNTIL SIGNED BY THE COUNTY ENGINEER. ONCE SIGNED, IT CAN BE REFERENCED BY NUMBER

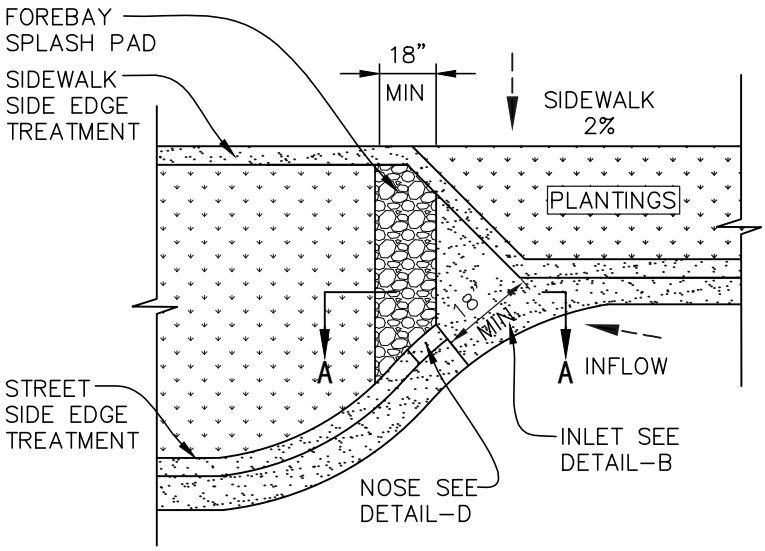

DETAIL - A
INLET PLAN VIEW

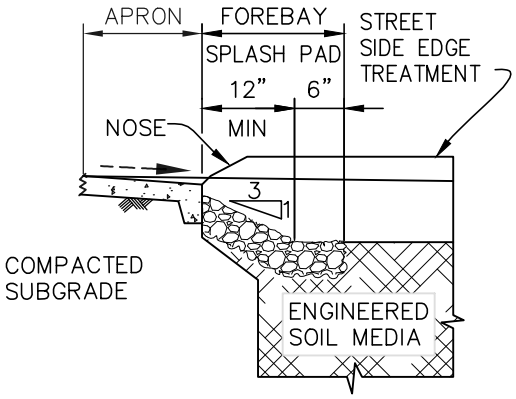

SECTION A-A

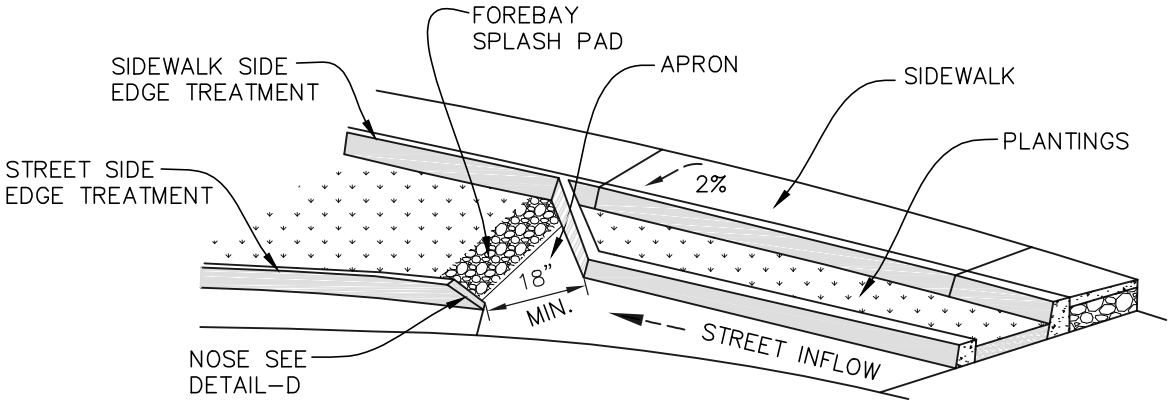

DETAIL - B
INLET ISOMETRIC VIEW

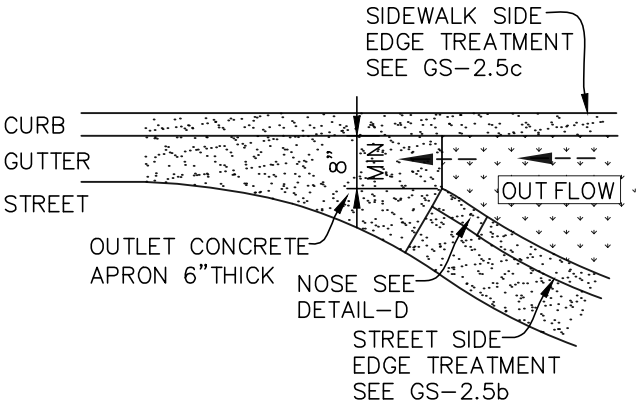

DETAIL - C
OUTLET PLAN VIEW

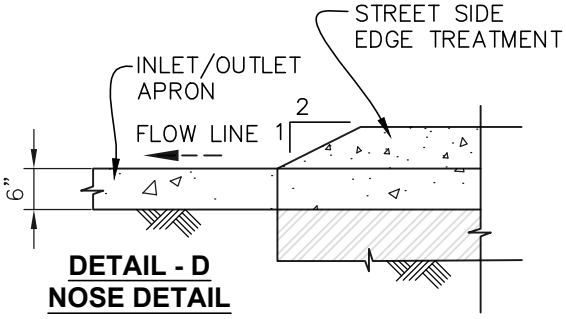

DETAIL - D
NOSE DETAIL

DRAWING NOT TO SCALE

DRAWN BY:____ CHECKED BY:____	SAN DIEGO COUNTY DESIGN STANDARD	REVISIONS	APPROVED	DATE
RECOMMENDED BY: JEFF S. MOODY, P.E.				
APPROVED BY COUNTY ENGINEER	**INLET AND OUTLET DETAILS FOR CURB EXTENSION**			
_____ DATE: _____ DEYLAMIAN SIROUS, P.E. R.C.E. NO. 53192, EXP 6/30/2017		DRAWING NUMBER	**GS-3.3**	

NOTE: THIS DRAWING IS TO BE INCLUDED ON PLANS UNTIL SIGNED BY THE COUNTY ENGINEER. ONCE SIGNED, IT CAN BE REFERENCED BY NUMBER

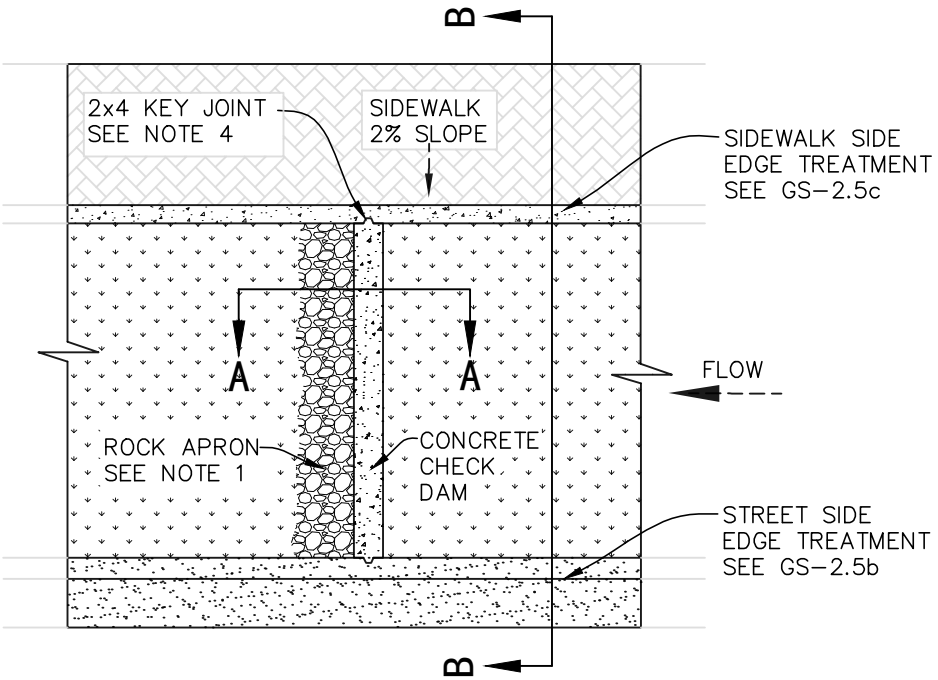

PLAN VIEW

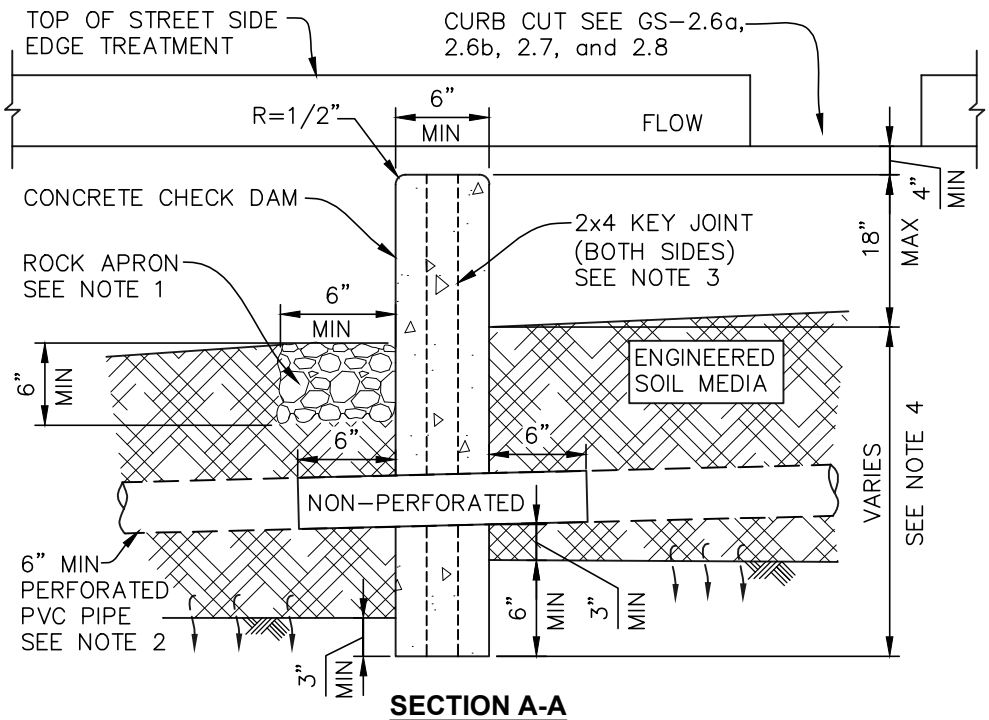

SECTION A-A

NOTES:

1. SIZE OF ROCK OR AGGREGATE TO BE SPECIFIED IN THE DESIGN PLANS.
2. IF PRESENT, UNDERDRAIN TO PASS THROUGH CHECK DAM IN A NON-PERFORATED PVC PIPE (6" MIN).
3. TO INSURE PROPER BONDING BETWEEN THE CONCRETE CHECK DAM AND THE EDGE TREATMENT, A 2x4 KEY JOINT SHALL BE FORMED ON BOTH SIDES PER SD RSD C-7.
4. DEPTH OF CHECK DAM VARIES DEPENDING ON THE DEPTH OF THE FACILITY.

DRAWING NOT TO SCALE

DRAWN BY:____	CHECKED BY:____	SAN DIEGO COUNTY DESIGN STANDARD	REVISIONS	APPROVED	DATE
RECOMMENDED BY: JEFF S. MOODY, P.E.					
APPROVED BY COUNTY ENGINEER		CONCRETE CHECK DAM			
_____ DATE: _____ DEYLAMIAN SIROUS, P.E. R.C.E. NO. 53192, EXP 6/30/2017			DRAWING NUMBER	GS-4.1a	

NOTE: THIS DRAWING IS TO BE INCLUDED ON PLANS UNTIL SIGNED BY THE COUNTY ENGINEER. ONCE SIGNED, IT CAN BE REFERENCED BY NUMBER

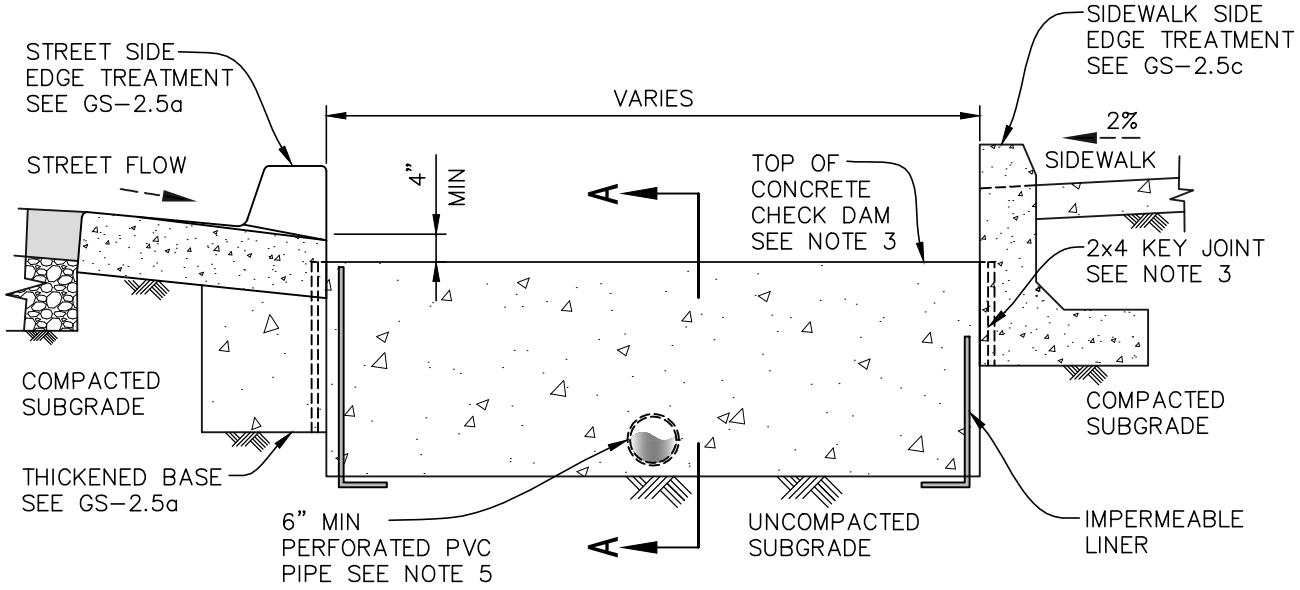

SECTION B-B

NOTES:

1. LOCATION, HEIGHT, AND WIDTH OF CHECK DAMS TO BE SPECIFIED IN THE DESIGN PLANS.
2. CONCRETE CHECK DAM SHALL BE CONTINUOUS (NO JOINTS).
3. TO INSURE PROPER BONDING BETWEEN THE CHECK DAM AND THE EDGE TREATMENT, A 2x4 KEY JOINT SHALL BE FORMED ON BOTH SIDES PER SD RSD C-7.
4. DEPTH OF CHECK DAM VARIES DEPENDING ON THE DEPTH OF THE FACILITY.
5. IF PRESENT, UNDERDRAIN TO PASS THROUGH CHECK DAM IN A NON-PERFORATED PVC PIPE.
6. FOR EDGE TREATMENT OPTIONS SEE DWG GS-2.5a, GS-2.5b, AND 2.5c.
7. EXCLUDE EDGE TREATMENT OPENING WHEN THE TOP OF SIDEWALK ELEVATION IS FLUSH WITH THE TOP OF EDGE TREATMENT WALL SEE DRAWING GS-2.5c.

DRAWING NOT TO SCALE

DRAWN BY:____	CHECKED BY:____	SAN DIEGO COUNTY DESIGN STANDARD	REVISIONS	APPROVED	DATE
RECOMMENDED BY: JEFF S. MOODY, P.E.					
APPROVED BY COUNTY ENGINEER		CONCRETE CHECK DAM			
_____ DATE: _____ DEYLAMIAN SIROUS, P.E. R.C.E. NO. 53192, EXP 6/30/2017			DRAWING NUMBER	GS-4.1b	

NOTE: THIS DRAWING IS TO BE INCLUDED ON PLANS UNTIL SIGNED BY THE COUNTY ENGINEER. ONCE SIGNED, IT CAN BE REFERENCED BY NUMBER

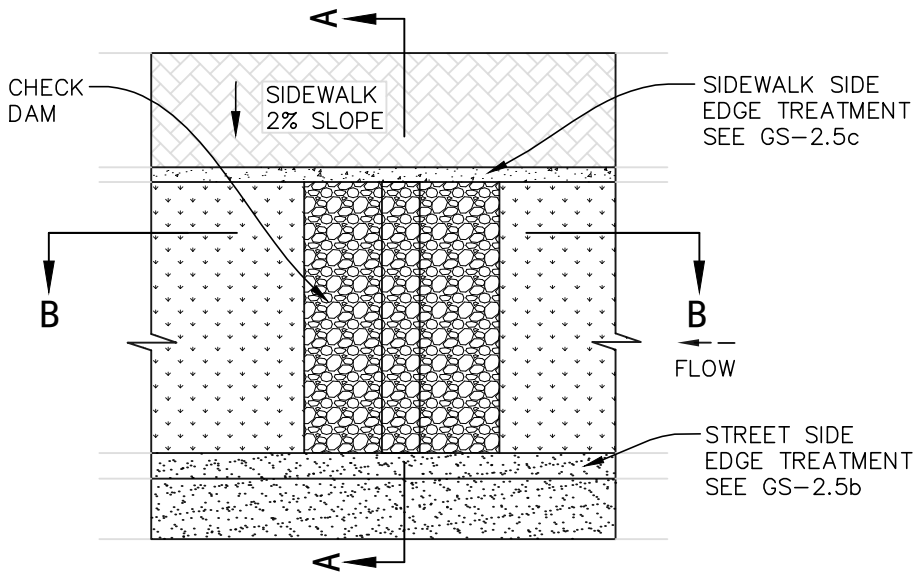

PLAN VIEW

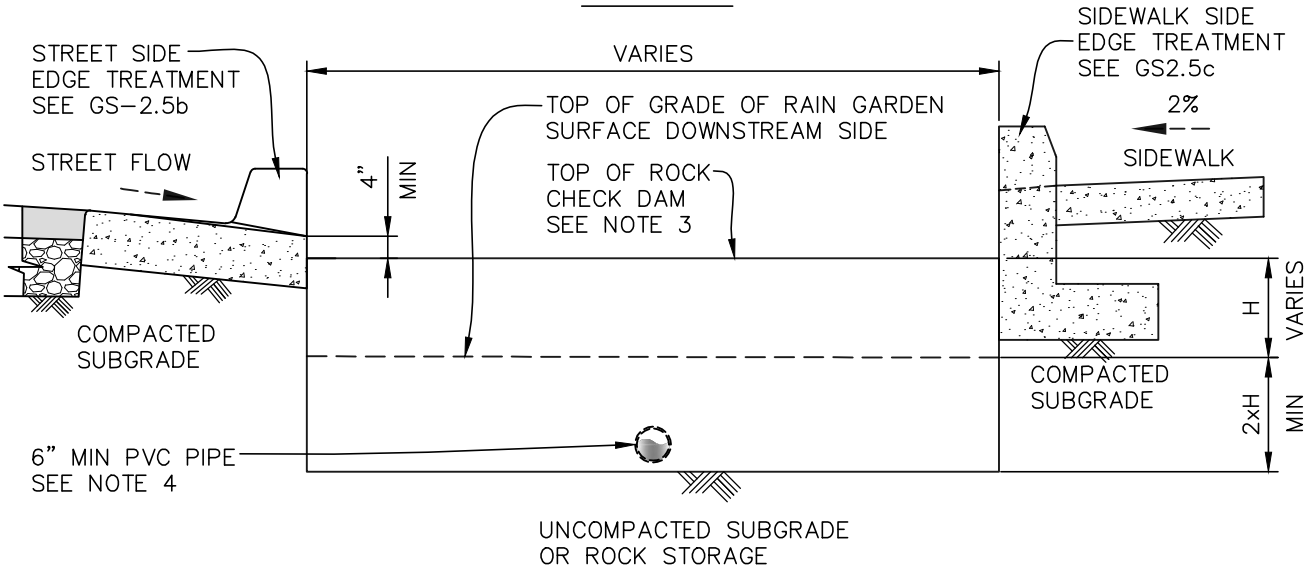

SECTION A-A

NOTES:

1. LOCATION, HEIGHTS, AND WIDTH OF CHECK DAMS TO BE SPECIFIED IN THE DESIGN PLANS.
2. SIZE OF STONE OR AGGREGATE TO BE SPECIFIED IN THE DESIGN PLANS.
3. DEPTH OF CHECK DAM VARIES DEPENDING ON THE DEPTH OF THE FACILITY.
4. IF PRESENT, UNDERDRAIN TO PASS THROUGH CHECK DAM IN A NON-PERFORATED PVC PIPE
5. FOR EDGE TREATMENT OPTIONS SEE DWG GS-2.5a, GS-2.5b, AND GS-2.5c
6. PROVIDE GABION BASKET, WELDED MESH TYPE WHEN UNDERDRAIN IS USED, TIE ALL WIRE BASKETS TOGETHER TO CREATE A CONTINUOUS STRUCTURE ALONG ITS LENGTH.

DRAWING NOT TO SCALE

DRAWN BY:____	CHECKED BY:____	SAN DIEGO COUNTY DESIGN STANDARD	REVISIONS	APPROVED	DATE
RECOMMENDED BY: JEFF S. MOODY, P.E.					
APPROVED BY COUNTY ENGINEER		ROCK CHECK DAM			
_____ DATE: _____ DEYLAMIAN SIROUS, P.E. R.C.E. NO. 53192, EXP 6/30/2017			DRAWING NUMBER	GS-4.2a	

NOTE: THIS DRAWING IS TO BE INCLUDED ON PLANS UNTIL SIGNED BY THE COUNTY ENGINEER. ONCE SIGNED, IT CAN BE REFERENCED BY NUMBER

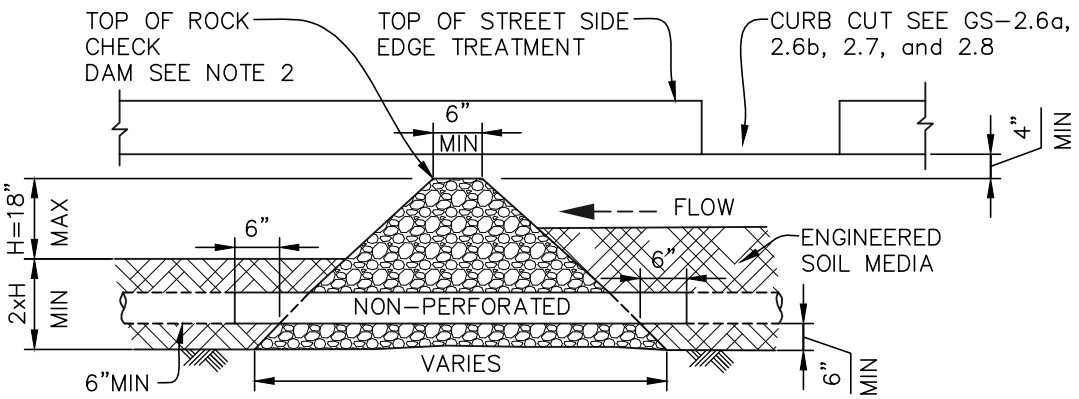

SECTION B-B
SLOPED STONE

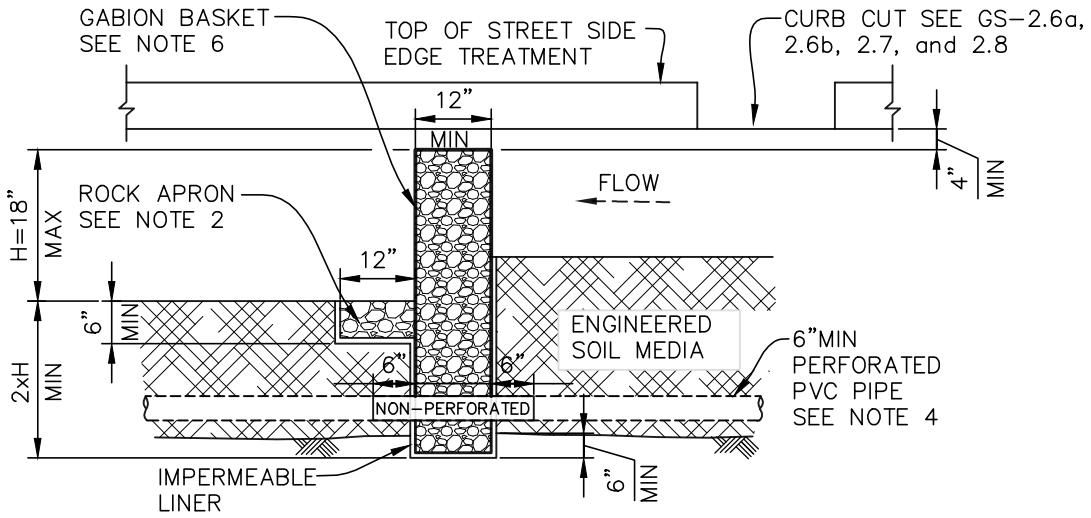

SECTION B-B
GABION BASKET

NOTES:

1. LOCATION, HEIGHTS, AND WIDTH OF CHECK DAMS TO BE SPECIFIED IN THE DESIGN PLANS.
2. SIZE OF ROCK OR AGGREGATE TO BE SPECIFIED IN THE DESIGN PLANS.
3. DEPTH OF CHECK DAM VARIES DEPENDING ON THE DEPTH OF THE FACILITY.
4. IF PRESENT, UNDERDRAIN TO PASS THROUGH CHECK DAM IN A NON-PERFORATED PVC PIPE
5. FOR EDGE TREATMENT OPTIONS SEE DWG GS-2.5a, GS-2.5b, AND GS-2.5c
6. FOR GABION BASKET CHECK DAM USE WELDED MESH TYPE WHEN UNDERDRAIN IS USED, TIE ALL WIRE BASKETS TOGETHER TO CREATE A CONTINUOUS STRUCTURE ALONG ITS LENGTH PER CALTRANS 2006 STANDARD PLAN D-100B.

DRAWING NOT TO SCALE

DRAWN BY:____	CHECKED BY:____	SAN DIEGO COUNTY DESIGN STANDARD	REVISIONS	APPROVED	DATE
RECOMMENDED BY: JEFF S. MOODY, P.E.					
APPROVED BY COUNTY ENGINEER		ROCK CHECK DAM			
____ DATE: ____ DEYLAMIAN SIROUS, P.E. R.C.E. NO. 53192, EXP 6/30/2017			DRAWING NUMBER	GS-4.2b	

NOTE: THIS DRAWING IS TO BE INCLUDED ON PLANS UNTIL SIGNED BY THE COUNTY ENGINEER. ONCE SIGNED, IT CAN BE REFERENCED BY NUMBER

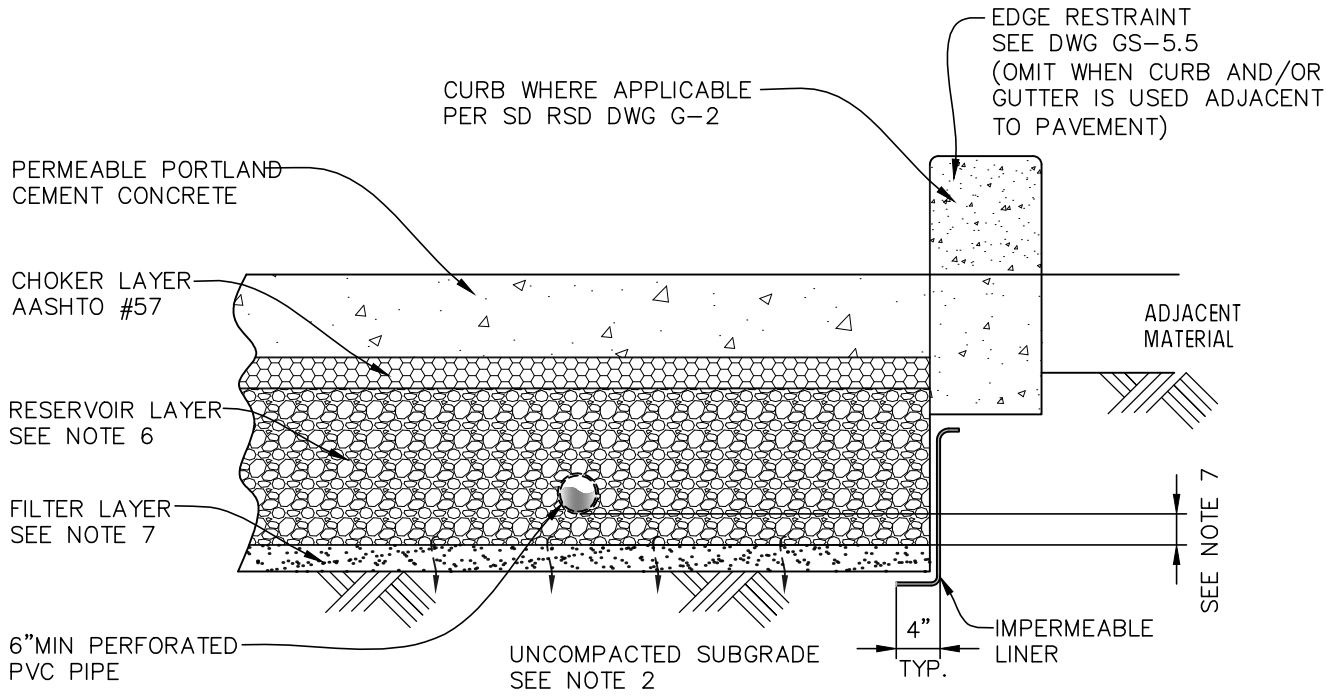

MINIMUM PAVEMENT THICKNESS		
PAVEMENT ITEM	CLASS A	CLASS B
PERMEABLE CONCRETE	6"	8"
CHOKER LAYER	4"	4"
RESERVOIR LAYER	6" SEE NOTE 5	12" SEE NOTE 5
FILTER LAYER	4"	4"

CLASS A: ALLEY, PAVING LANE, LOCAL STREET
CLASS B: COLLECTOR OR ARTERIAL (NOT CURRENTLY ALLOWED)

NOTES:

1. DETAIL TO BE USED ONLY WHEN APPROVED BY COUNTY AND SHALL MEET CURRENT APPROVED COUNTY SPECIFICATION FOR "IMPERMEABLE PORTLAND CEMENT CONCRETE PAVEMENT".
2. UNCOMPACTED SUBGRADE FOR AREAS DESIGNED FOR INFILTRATION PRACTICES. FOR OTHER AREAS, COMPACT AS SPECIFIED. FOR SOFT SOILS, INSTALL GEOGRID PER GEOTECHNICAL ENGINEER RECOMMENDATIONS.
3. AGGREGATE LAYERS SHALL MEET CURRENT APPROVED COUNTY SPECIFICATION FOR "AGGREGATE FOR PERMEABLE PAVEMENT AND RAIN GARDEN".
4. SEE DRAWING GS-5.4 FOR LONGITUDINAL AND CROSS SLOPE REQUIREMENTS.
5. IMPERMEABLE LINER TO BE USED TO PROMOTE WATER RE-USE, PROTECT NEARBY BUILDING FOUNDATIONS, AND AVOID INFILTRATION AROUND UTILITIES.
6. DEPTH OF RESERVOIR LAYER AS SHOWN ON DESIGN PLANS SHOULD BE SIZED TO ADDRESS STORMWATER CONVEYANCE REQUIREMENTS, AND PAVEMENTS STRUCTURAL DESIGN.
7. ENHANCED DESIGN CONTAINS A WATER STORAGE LAYER AND AN INFILTRATION SUMP BENEATH THE UNDERDRAIN SIZED TO DRAIN THE DESIGN STORM WITHIN 96 HOURS.
8. WHEN FILTER LAYER IS OMITTED, PROVIDE GEOTEXTILE BENEATH RESERVOIR LAYER MEETING CURRENT APPROVED COUNTY SPECIFICATION FOR GOESYNTHETICS.
9. BOTTOM OF RESERVOIR LAYER SHALL BE AT LEAST 10' ABOVE THE SEASONAL HIGH WATER TABLE OR 2' ABOVE BEDROCK, AS DETERMINED BY GEOTECHNICAL INVESTIGATION.
10. TOP OF PAVEMENT SHOULD BE DESIGNED TO ACHIEVE 1% MINIMUM SLOPE IN ANY DIRECTION.

DRAWING NOT TO SCALE

DRAWN BY:____	CHECKED BY:____	SAN DIEGO COUNTY DESIGN STANDARD	REVISIONS	APPROVED	DATE
RECOMMENDED BY: JEFF S. MOODY, P.E.					
APPROVED BY COUNTY ENGINEER		PERMEABLE CONCRETE PAVEMENT			
_____ DATE: _____ DEYLAMIAN SIROUS, P.E. R.C.E. NO. 53192, EXP 6/30/2017			DRAWING NUMBER	GS-5.1a	

NOTE: THIS DRAWING IS TO BE INCLUDED ON PLANS UNTIL SIGNED BY THE COUNTY ENGINEER. ONCE SIGNED, IT CAN BE REFERENCED BY NUMBER

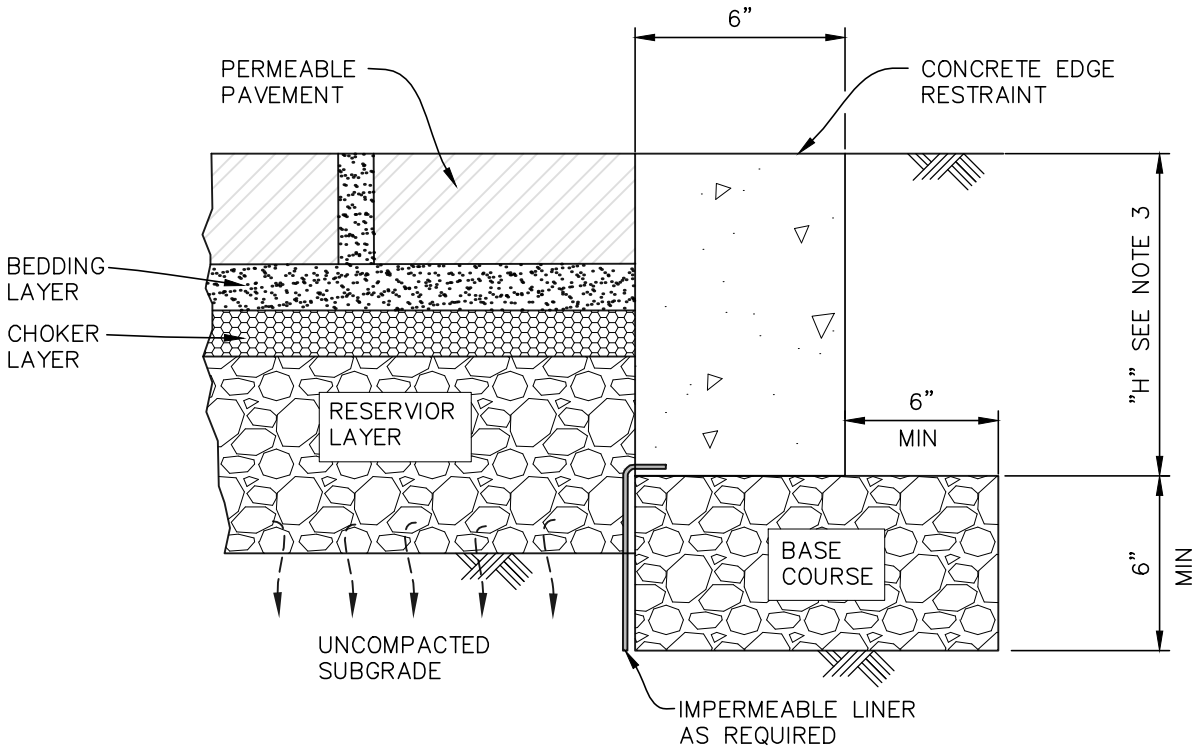

STONE TYPE FOR GREEN STREET ELEMENTS		
LAYER NAME	GREEN STREET ELEMENTS	
	PERMEABLE PAVEMENTS	RAIN GARDENS
RESERVOIR	#2 – #3	#57
CHOKER	#57	See Table 1–3 SD Green Street Specifications
SAND FILTER	#8	#8
BEDDING LAYER	#8	N/A

NOTES:

1. PERIMETER RESTRAINTS ARE REQUIRED FOR PERMEABLE INTERLOCKING CONCRETE PAVER SYSTEM. ENGINEER TO DETERMINE IF EDGE RESTRAINTS ARE NECESSARY FOR PERMEABLE ASPHALT AND PERMEABLE CONCRETE INSTALLATION.
2. MATERIALS, TYPE F, 3,500 PSI CONCRETE; OTHER TYPES OF EDGE RESTRAINT, SUCH AS STEEL OR PLASTIC SHALL BE ALLOWED AS APPROVED BY THE COUNTY ENGINEER, AND BASED ON MANUFACTURER'S RECOMMENDATIONS.
3. H = 10" FOR PERMEABLE ASPHALT CLASS B; 6" FOR PERMEABLE CONCRETE PAVERS AND PERMEABLE ASPHALT CLASS A.
4. FOR REGULAR PAVEMENT, USE CUTOFF WALL AT END OF PAVEMENT PER SAN DIEGO REGIONAL STANDARD DRAWING G–22.

DRAWING NOT TO SCALE

DRAWN BY:____ CHECKED BY:____	SAN DIEGO COUNTY DESIGN STANDARD	REVISIONS	APPROVED	DATE
RECOMMENDED BY: JEFF S. MOODY, P.E.				
APPROVED BY COUNTY ENGINEER	PERMEABLE PAVEMENT EDGE RESTRAINT			
____ DATE: ____ DEYLAMIAN SIROUS, P.E. R.C.E. NO. 53192, EXP 6/30/2017		DRAWING NUMBER	GS-5.5	

NOTE: THIS DRAWING IS TO BE INCLUDED ON PLANS UNTIL SIGNED BY THE COUNTY ENGINEER. ONCE SIGNED, IT CAN BE REFERENCED BY NUMBER

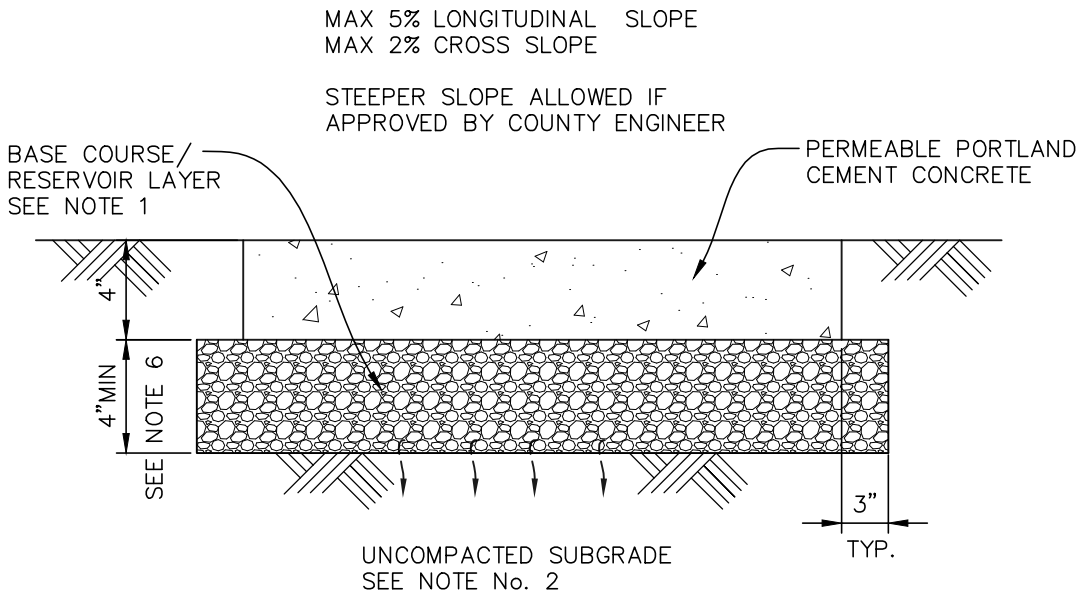

NOTES:

1. DETAIL TO BE USED ONLY WHEN APPROVED BY COUNTY AND SHALL MEET CURRENT APPROVED COUNTY SPECIFICATION FOR "PERVIOUS PORTLAND CEMENT CONCRETE PAVEMENT".
2. UNCOMPACTED SUBGRADE FOR AREAS DESIGNED FOR INFILTRATION PRACTICES. FOR OTHER AREAS, COMPACT AS SPECIFIED. FOR SOFT SOILS, INSTALL GEOGRID PER GEOTECHNICAL ENGINEER RECOMMENDATIONS.
3. AGGREGATE LAYERS SHALL MEET CURRENT APPROVED COUNTY SPECIFICATION FOR "AGGREGATE FOR PERMEABLE PAVEMENT AND RAIN GARDEN".
4. WHERE INSITU SOILS ARE NOT CONDUCIVE TO INFILTRATION OF DESIGN STORM VOLUME WITHIN 72 HOURS, UNDERDRAIN SHOULD BE CONSIDERED THROUGH COORDINATION WITH COUNTY ENGINEER.
5. IMPERMEABLE LINER TO BE USED TO PROMOTE WATER RE-USE, PROTECT NEARBY BUILDING FOUNDATIONS, AND AVOID INFILTRATION AROUND UTILITIES.
6. AGGREGATE DEPTH MAY BE GREATER THAN MINIMUM. AS SHOWN IN DESIGN PLANS TO ACHIEVE ADDITIONAL STORMWATER STORAGE.
7. BOTTOM OF RESERVOIR LAYER SHALL BE AT LEAST 10' ABOVE THE SEASONAL HIGH WATER TABLE OR 2' ABOVE BEDROCK, AS DETERMINED BY GEOTECHNICAL INVESTIGATION.
8. TOP OF PAVEMENT SHOULD BE DESIGNED TO ACHIEVE 1% MINIMUM SLOPE IN ANY DIRECTION.
9. IN CASE OF TREE PLANTINGS, STRUCTURAL SOIL MAY EXTEND UNDER RESERVOIR LAYER.

DRAWING NOT TO SCALE

DRAWN BY:____	CHECKED BY:____	SAN DIEGO COUNTY DESIGN STANDARD	REVISIONS	APPROVED	DATE
RECOMMENDED BY: JEFF S. MOODY, P.E.					
APPROVED BY COUNTY ENGINEER		**PERMEABLE CONCRETE PAVEMENT (SIDEWALK)**			
_____ DATE: _____ DEYLAMIAN SIROUS, P.E. R.C.E. NO. 53192, EXP 6/30/2017			DRAWING NUMBER	**GS-5.1b**	

NOTE: THIS DRAWING IS TO BE INCLUDED ON PLANS UNTIL SIGNED BY THE COUNTY ENGINEER. ONCE SIGNED, IT CAN BE REFERENED BY NUMBER

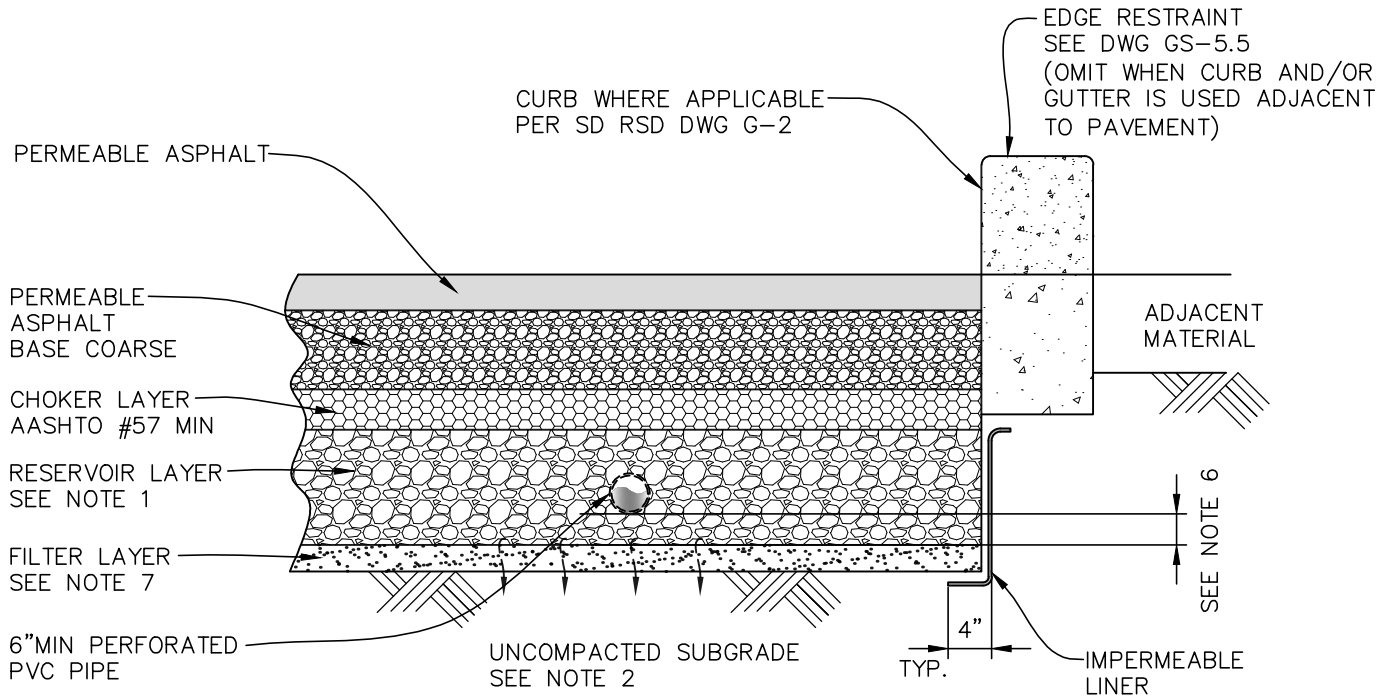

MINIMUM PAVEMENT THICKNESS		
PAVEMENT ITEM	CLASS A	CLASS B
PERMEABLE ASPHALT	1.5"	3"
AC BASE COURSE	3"	6"
CHOKER LAYER	4"	4"
RESERVOIR LAYER	6" SEE NOTE 5	12" SEE NOTE 5
FILTER LAYER	4"	4"

CLASS A: ALLEY, PAVING LANE, LOCAL STREET
CLASS B: COLLECTOR OR ARTERIAL (NOT CURRENTLY ALLOWED)

NOTES:

1. DETAIL TO BE USED ONLY WHEN APPROVED BY COUNTY AND SHALL MEET CURRENT APPROVED COUNTY SPECIFICATION FOR "PERMEABLE ASPHALT PAVEMENT".
2. UNCOMPACTED SUBGRADE FOR AREAS DESIGNED FOR INFILTRATION PRACTICES. FOR OTHER AREAS, COMPACT AS SPECIFIED. FOR SOFT SOILS, INSTALL GEOGRID PER GEOTECHNICAL ENGINEER RECOMMENDATIONS.
3. AGGREGATE LAYERS SHALL MEET CURRENT APPROVED COUNTY SPECIFICATION FOR "AGGREGATE FOR PERMEABLE PAVEMENT AND RAIN GARDEN".SEE DWG GS-5.4 FOR LONGITUDINAL AND CROSS SLOPE REQUIREMENTS.
4. IMPERMEABLE LINER TO BE USED TO PROMOTE WATER RE-USE, PROTECT NEARBY BUILDING FOUNDATIONS, AND AVOID INFILTRATION AROUND UTILITIES.
5. DEPTH OF RESERVOIR LAYER AS SHOWN ON DESIGN PLANS SHOULD BE SIZED TO ADDRESS STORMWATER CONVEYANCE REQUIREMENTS, AND PAVEMENTS STRUCTURAL DESIGN.
6. ENHANCED DESIGN CONTAINS A WATER STORAGE LAYER AND AN INFILTRATION SUMP BENEATH THE UNDERDRAIN SIZED TO DRAIN THE DESIGN STORM WITHIN 96 HOURS.
7. WHEN FILTER LAYER IS OMITTED, PROVIDE GEOTEXTILE BENEATH RESERVOIR LAYER MEETING CURRENT APPROVED COUNTY SPECIFICATION FOR GOESYNTHETICS MATERIALS.
8. BOTTOM OF RESERVOIR LAYER SHALL BE AT LEAST 10' ABOVE THE SEASONAL HIGH WATER TABLE OR 2' ABOVE BEDROCK, AS DETERMINED BY GEOTECHNICAL INVESTIGATION.
9. TOP OF PAVEMENT SHOULD BE DESIGNED TO ACHIEVE 1% MINIMUM SLOPE IN ANY DIRECTION.

DRAWING NOT TO SCALE

DRAWN BY:____	CHECKED BY:____	SAN DIEGO COUNTY DESIGN STANDARD	REVISIONS	APPROVED	DATE
RECOMMENDED BY: JEFF S. MOODY, P.E.					
APPROVED BY COUNTY ENGINEER		PERMEABLE ASPHALT PAVEMENT			
_____ DATE: _____ DEYLAMIAN SIROUS, P.E. R.C.E. NO. 53192, EXP 6/30/2017			DRAWING NUMBER	GS-5.2a	

NOTE: THIS DRAWING IS TO BE INCLUDED ON PLANS UNTIL SIGNED BY THE COUNTY ENGINEER. ONCE SIGNED, IT CAN BE REFERENCED BY NUMBER

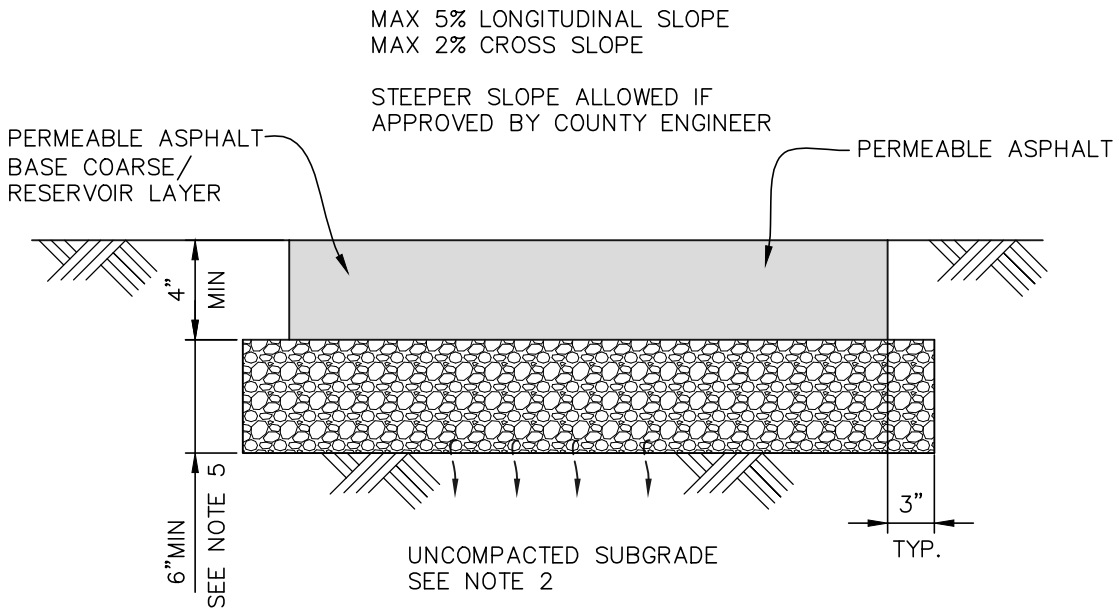

NOTES:

1. DETAIL TO BE USED ONLY WHEN APPROVED BY COUNTY AND SHALL MEET CURRENT APPROVED COUNTY SPECIFICATION FOR "PERMEABLE ASPHALT PAVEMENT".
2. UNCOMPACTED SUBGRADE FOR AREAS DESIGNED FOR INFILTRATION PRACTICES. FOR OTHER AREAS, COMPACT AS SPECIFIED. FOR SOFT SOILS, INSTALL GEOGRID PER GEOTECHNICAL ENGINEER RECOMMENDATIONS.
3. AGGREGATE LAYERS SHALL MEET CURRENT APPROVED COUNTY SPECIFICATION FOR "AGGREGATE FOR PERMEABLE PAVEMENT AND RAIN GARDEN".
4. WHERE INSITU SOILS ARE NOT CONDUCIVE TO INFILTRATION OF DESIGN STORM VOLUME WITHIN 72 HOURS, UNDERDRAIN SHOULD BE CONSIDERED THROUGH COORDINATION WITH COUNTY ENGINEER.
5. IMPERMEABLE LINER TO BE USED TO PROMOTE WATER RE-USE, PROTECT NEARBY BUILDING FOUNDATIONS, AND AVOID INFILTRATION AROUND UTILITIES.
6. AGGREGATE DEPTH MAY BE GREATER THAN MINIMUM AS SHOWN IN DESIGN PLANS TO ACHIEVE ADDITIONAL STORMWATER STORAGE.
7. BOTTOM OF RESERVOIR LAYER SHALL BE AT LEAST 10' ABOVE THE SEASONAL HIGH WATER TABLE OR 2' ABOVE BEDROCK, AS DETERMINED BY GEOTECHNICAL INVESTIGATION.
8. TOP OF PAVEMENT SHOULD BE DESIGNED TO ACHIEVE 1% MINIMUM SLOPE IN ANY DIRECTION.

DRAWING NOT TO SCALE

DRAWN BY:____	CHECKED BY:____	SAN DIEGO COUNTY DESIGN STANDARD	REVISIONS	APPROVED	DATE
RECOMMENDED BY: JEFF S. MOODY, P.E.					
APPROVED BY COUNTY ENGINEER		**PERMEABLE ASPHALT PAVEMENT (SIDEWALK)**			
_____ DATE: _____ DEYLAMIAN SIROUS, P.E. R.C.E. NO. 53192, EXP 6/30/2017			DRAWING NUMBER	**GS-5.2b**	

NOTE: THIS DRAWING IS TO BE INCLUDED ON PLANS UNTIL SIGNED BY THE COUNTY ENGINEER. ONCE SIGNED, IT CAN BE REFERENCED BY NUMBER

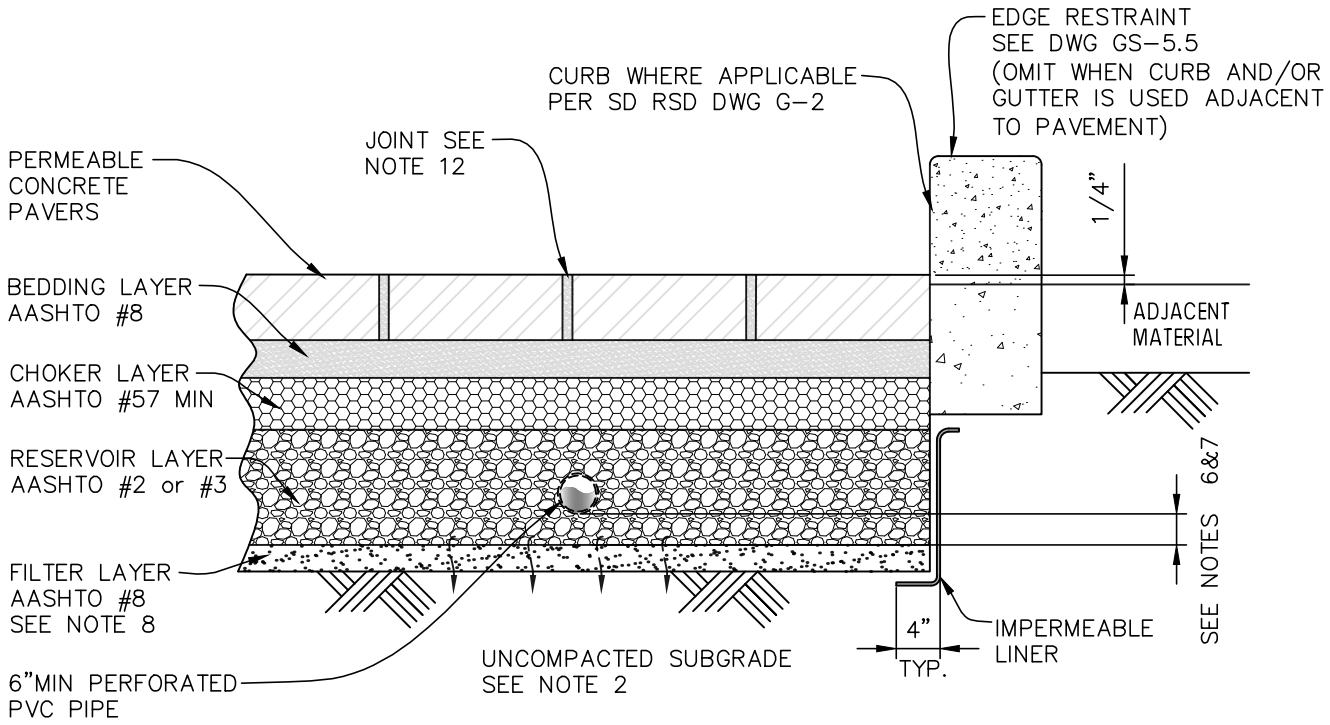

NOTES:

1. DETAIL TO BE USED ONLY WHEN APPROVED BY COUNTY AND SHALL MEET CURRENT APPROVED COUNTY SPECIFICATION FOR "PERMEABLE CONCRETE PAVERS".
2. UNCOMPACTED SUBGRADE FOR AREAS DESIGNED FOR INFILTRATION PRACTICES. FOR OTHER AREAS, COMPACT AS SPECIFIED SPECIFICATION. FOR SOFT SOILS, INSTALL GEOGRID PER GEOTECHNICAL ENGINEER RECOMMENDATIONS.
3. AGGREGATE LAYERS SHALL MEET CURRENT APPROVED COUNTY SPECIFICATION FOR "AGGREGATE FOR PERMEABLE PAVEMENT AND RAIN GARDEN".
4. SEE DWG GS-5.4 FOR LONGITUDINAL AND CROSS SLOPE REQUIREMENTS.
5. IMPERMEABLE LINER TO BE USED TO PROMOTE WATER RE-USE, PROTECT NEARBY BUILDING FOUNDATIONS AND AVOID INFILTRATION AROUND UTILITIES.
6. DEPTH OF RESERVOIR LAYER AS SHOWN ON DESIGN PLANS SHOULD BE SIZED TO ADDRESS STORMWATER CONVEYANCE REQUIREMENTS AND PAVEMENT STRUCTURAL DESIGN.
7. ENHANCED DESIGN CONTAINS A WATER STORAGE LAYER AND AN INFILTRATION SUMP BENEATH THE UNDERDRAIN SIZED TO DRAIN THE DESIGN STORM WITHIN 96 HOURS.
8. WHEN FILTER LAYER IS OMITTED, PROVIDE GEOTEXTILE BENEATH RESERVOIR LAYER MEETING CURRENT APPROVED COUNTY SPECIFICATION FOR "GOESYNTHETIC MATERIALS".
9. BOTTOM OF RESERVOIR LAYER SHALL BE AT LEAST 10' ABOVE THE SEASONAL HIGH WATER TABLE OR 2' ABOVE BEDROCK, AS DETERMINED BY GEOTECHNICAL INVESTIGATION.
10. TOP OF PAVEMENT SHOULD BE DESIGNED TO ACHIEVE 1% MINIMUM SLOPE IN ANY DIRECTION.
11. OTHER TYPES OF EDGE RESTRAINTS SUCH AS STEEL OR PLASTIC SHALL BE ALLOWED AS APPROVED BY THE COUNTY ENGINEER AND BASED ON MANUFACTURER'S RECOMMENDATIONS.
12. JOINT TO HAVE 1/2" MAXIMUM GAP IN ACCORDANCE WITH THE LATEST ADA REQUIREMENTS AND TO BE FILLED WITH AASHTO#8 OR APPROVED EQUIVALENT. MINIMUM GAP SHALL BE 1/4"OR PER MANUFACTURER'S RECOMMENDATIONS FOR PERMEABLE CONCRETE PAVERS.

DRAWING NOT TO SCALE

DRAWN BY:____	CHECKED BY:____	SAN DIEGO COUNTY DESIGN STANDARD	REVISIONS	APPROVED	DATE
RECOMMENDED BY: JEFF S. MOODY, P.E.					
APPROVED BY COUNTY ENGINEER		PERMEABLE PAVERS			
_____ DATE: _____					
DEYLAMIAN SIROUS, P.E. R.C.E. NO. 53192, EXP 6/30/2017			DRAWING NUMBER	GS-5.3a	

NOTE: THIS DRAWING IS TO BE INCLUDED ON PLANS UNTIL SIGNED BY THE COUNTY ENGINEER. ONCE SIGNED, IT CAN BE REFERENCED BY NUMBER

MAX 5% LONGITUDINAL SLOPE
MAX 2% CROSS SLOPE

STEEPER SLOPE ALLOWED IF
APPROVED BY COUNTY ENGINEER

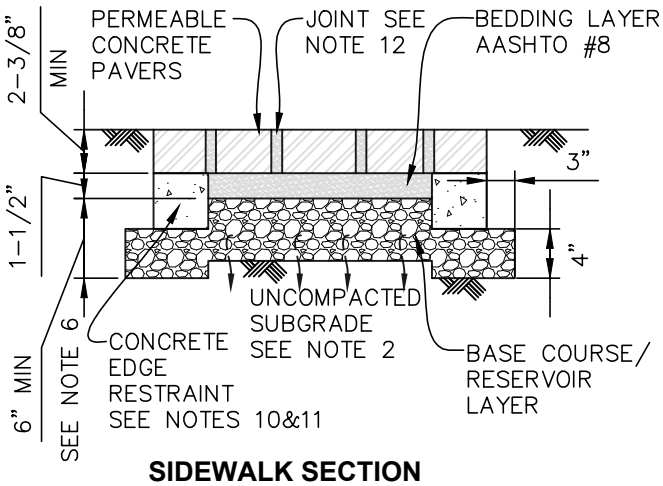

SIDEWALK SECTION

MAX 5% LONGITUDINAL SLOPE
MAX 2% CROSS SLOPE

STEEPER SLOPE ALLOWED IF
APPROVED BY COUNTY ENGINEER

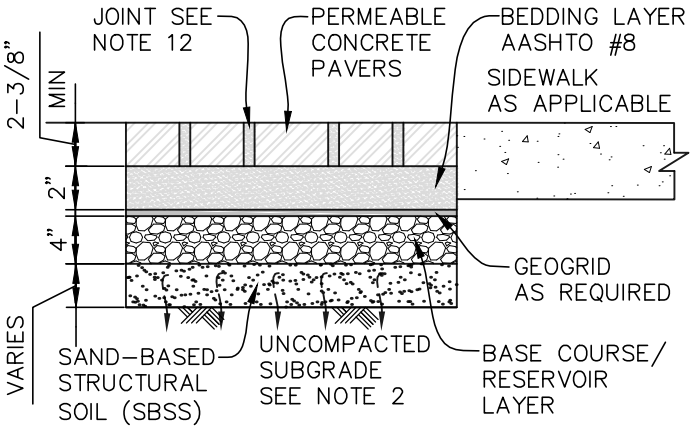

PERMEABLE PAVERS OVER SAND-BASED STRUCTURAL SOIL

NOTES:

1. DETAIL TO BE USED ONLY WHEN APPROVED BY COUNTY AND SHALL MEET CURRENT APPROVED COUNTY SPECIFICATION FOR POROUS ASPHALT PAVEMENT.
2. UNCOMPACTED SUBGRADE FOR AREAS DESIGNED FOR INFILTRATION PRACTICES. FOR OTHER AREAS, COMPACT AS SPECIFIED. FOR SOFT SOILS, INSTALL GEOGRID PER GEOTECHNICAL ENGINEER RECOMMENDATIONS.
3. AGGREGATE LAYERS SHALL MEET CURRENT APPROVED COUNTY SPECIFICATION FOR "AGGREGATE FOR PERMEABLE PAVEMENT AND RAIN GARDEN".
4. WHERE INSITU SOILS ARE NOT CONDUCIVE TO INFILTRATION OF DESIGN STORM VOLUME WITHIN 72 HOURS, UNDERDRAIN SHOULD BE CONSIDERED THROUGH COORDINATION WITH COUNTY ENGINEER.
5. IMPERMEABLE LINER TO BE USED TO PROMOTE WATER RE-USE, PROTECT NEARBY BUILDING FOUNDATIONS, AND AVOID INFILTRATION AROUND UTILITIES.
6. AGGREGATE DEPTH MAY BE GREATER THAN MINIMUM AS SHOWN IN DESIGN PLANS TO ACHIEVE ADDITIONAL STORMWATER STORAGE.
7. BOTTOM OF PERMEABLE PAVEMENT STRUCTURE SHALL BE AT LEAST 10' ABOVE THE SEASONAL HIGH WATER TABLE OR 2' ABOVE BEDROCK, AS DETERMINED BY GEOTECHNICAL INVESTIGATION.
8. TOP OF PAVEMENT SHOULD BE DESIGNED TO ACHIEVE 1% MINIMUM SLOPE IN ANY DIRECTION.
9. IN AREAS OF TREE PLANTINGS WHICH CALL FOR SAND BASED STRUCTURAL SOIL (SSBS). THE SSBS MAY EXTEND UNDER THE AGGREGATE BASE LAYER OF THE SIDEWALK.
10. CONCRETE EDGE RESTRAINT MIN 4" WIDE AND 7 1/2" DEEP; MORTAR OR POLYMER ADHERED PAVERS TO TOP; ALTERNATIVELY EXTEND EDGE RESTRAINT TO SURFACE.
11. OTHER TYPE OF EDGE RESTRAINTS SUCH AS STEEL OR PLASTIC SHALL BE ALLOWED AS APPROVED BY COUNTY ENGINEER AND BASED ON MANUFACTURER'S RECOMMENDATIONS.
12. JOINT TO HAVE 1/2" MAXIMUM GAP IN ACCORDANCE WITH THE LATEST ADA REQUIREMENTS AND TO BE FILLED WITH AASHTO#8 OR APPROVED EQUIVALENT. MINIMUM GAP SHALL BE 1/4"OR PER MANUFACTURER'S RECOMMENDATIONS FOR PERMEABLE CONCRETE PAVERS.

DRAWING NOT TO SCALE

DRAWN BY:_____	CHECKED BY:_____	SAN DIEGO COUNTY DESIGN STANDARD	REVISIONS	APPROVED	DATE
RECOMMENDED BY: JEFF S. MOODY, P.E.					
APPROVED BY COUNTY ENGINEER		PERMEABLE PAVERS (SIDEWALK)			
_____ DATE: _____ DEYLAMIAN SIROUS, P.E. R.C.E. NO. 53192, EXP 6/30/2017			DRAWING NUMBER	GS-5.3b	

NOTE: THIS DRAWING IS TO BE INCLUDED ON PLANS UNTIL SIGNED BY THE COUNTY ENGINEER. ONCE SIGNED, IT CAN BE REFERENCED ON PLANS

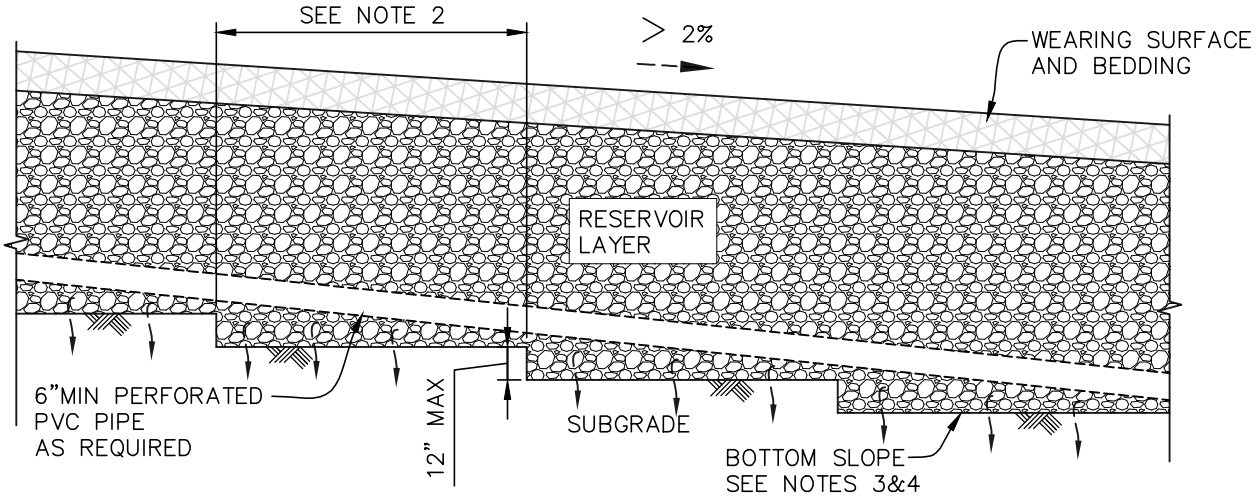

TERRACED SLOPE
LONGITUDINAL SLOPE > 2%

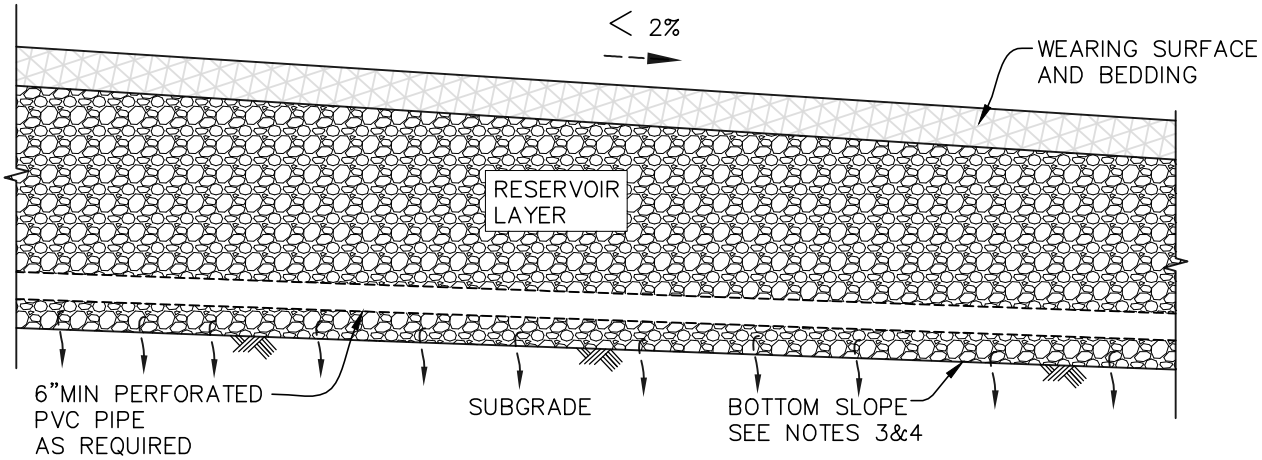

TERRACED SLOPE
LONGITUDINAL SLOPE < 2%

NOTES:

1. CHECK DAMS TO BE USED FOR INSTALLATION WITH BOTTOM SLOPES GREATER THAN 2% LONGITUDINAL. OR AS DIRECTED BY THE CONTRACT DOCUMENTS.
2. DISTANCE BETWEEN STEPS IS DETERMINED BY THE SLOPE OF THE PAVEMENT TO ACHIEVE A STEP NO MORE THAN 12" TALL.
3. BOTTOM SLOPE=0% TO 5% BUT NOT STEEPER THAN TOP SLOPE, PER DESIGN PLANS. ENGINEER TO DESIGN SYSTEM TO ACHIEVE STORAGE, DRAW-DOWN, AND STRUCTURAL REQUIREMENTS. BOTTOM SLOPE DOES NOT HAVE TO BE PARALLEL TO TOP SLOPE.
4. FOR FACILITIES WITH IMPERMEABLE LINER, MINIMUM BOTTOM SLOPE SHALL BE 2% TO DRAIN DRY.
5. TRANSVERSE BOTTOM SLOPES AND CROSS SLOPES SHALL BE LESS THAN 3%.

DRAWING NOT TO SCALE

DRAWN BY:____	CHECKED BY:____	SAN DIEGO COUNTY DESIGN STANDARD	REVISIONS	APPROVED	DATE
RECOMMENDED BY: JEFF S. MOODY, P.E.					
APPROVED BY COUNTY ENGINEER		PERMEABLE PAVEMENTS			
_____ DATE: _____		ELEVATION - 1			
DEYLAMIAN SIROUS, P.E. R.C.E. NO. 53192, EXP 6/30/2017			DRAWING NUMBER	GS-5.4a	

NOTE: THIS DRAWING IS TO BE INCLUDED ON PLANS UNTIL SIGNED BY THE COUNTY ENGINEER. ONCE SIGNED, IT CAN BE REFERENCED ON PLANS

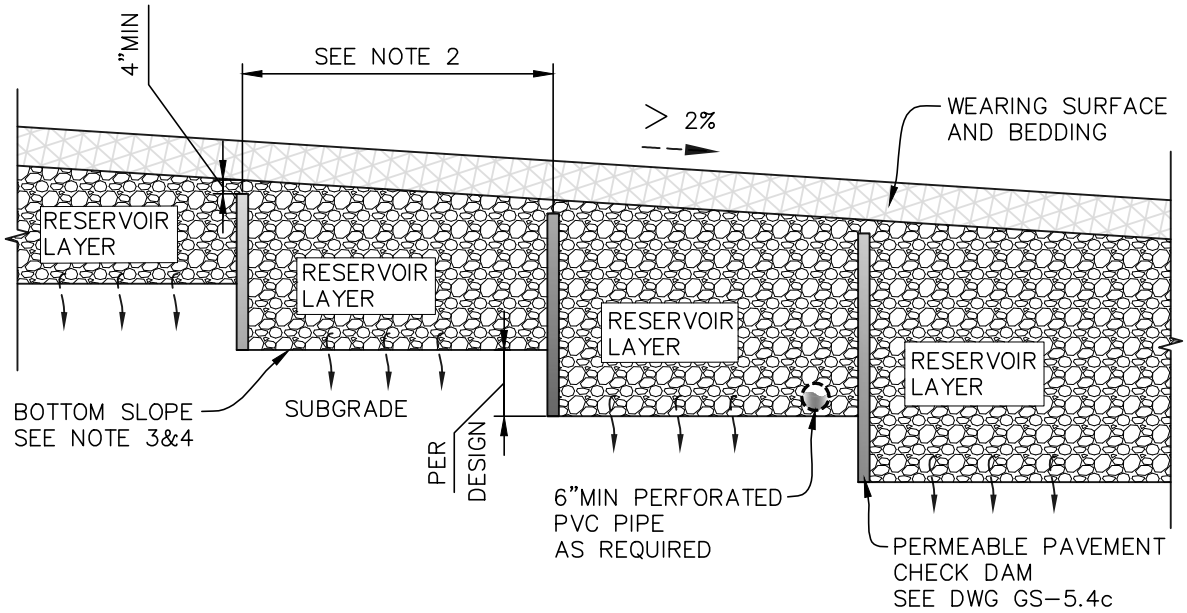

LONGITUDINAL SLOPE > 2%

NOTES:

1. CHECK DAMS TO BE USED FOR INSTALLATION WITH BOTTOM SLOPES GREATER THAN 2% LONGITUDINAL, OR AS DIRECTED BY THE CONTRACT DOCUMENTS.
2. DISTANCE BETWEEN STEPS IS DETERMINED BY THE SLOPE OF THE PAVEMENT TO ACHIEVE A STEP NO MORE THAN 12" TALL.
3. BOTTOM SLOPE = 0% TO 5% BUT NOT STEEPER THAN TOP SLOPE, PER DESIGN PLANS. ENGINEER TO DESIGN SYSTEM TO ACHIEVE STORAGE, DRAW-DOWN, AND STRUCTURAL REQUIREMENTS. BOTTOM SLOPE DOES NOT HAVE TO BE PARALLEL TO TOP SLOPE.
4. FOR FACILITIES WITH WATERPROOF MEMBRANE, MINIMUM BOTTOM SLOPE SHALL BE 2% TO DRAIN DRY.
5. TRANSVERSE BOTTOM SLOPES AND CROSS SLOPES SHALL BE LESS THAN 3%.

DRAWING NOT TO SCALE

DRAWN BY:____	CHECKED BY:____	SAN DIEGO COUNTY DESIGN STANDARD	REVISIONS	APPROVED	DATE
RECOMMENDED BY: JEFF S. MOODY, P.E.					
APPROVED BY COUNTY ENGINEER		PERMEABLE PAVEMENTS			
_____ DATE: _____		ELEVATION - 2	DRAWING NUMBER	GS-5.4b	
DEYLAMIAN SIROUS, P.E. R.C.E. NO. 53192, EXP 6/30/2017					

NOTE: THIS DRAWING IS TO BE INCLUDED ON PLANS UNTIL SIGNED BY THE COUNTY ENGINEER. ONCE SIGNED, IT CAN BE REFERENCED ON PLANS

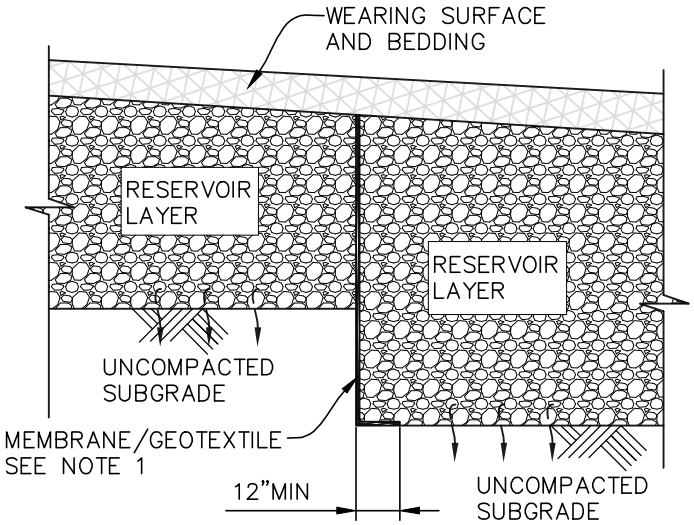

MEMBRANE/GEOTEXTILE
CHECK DAM

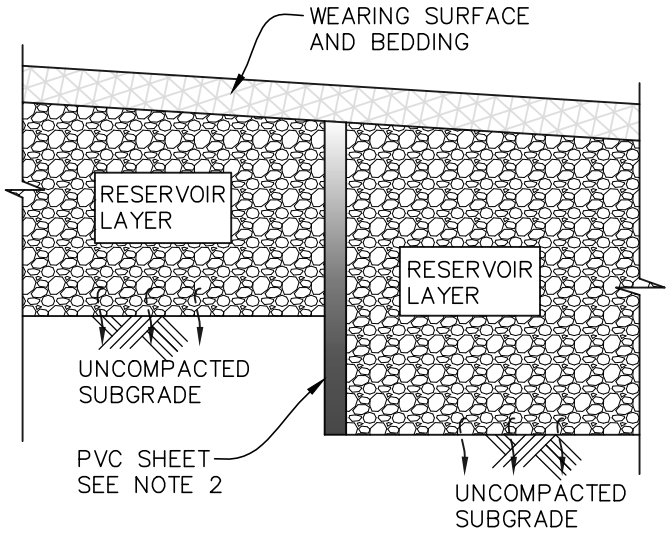

PVC SHEET
CHECK DAM

NOTES:

1. IMPERMEABLE LINER OR LOW PERMEABILITY GEOTEXTILE (PERMITTIVITY OF 0.05 SEC OR LESS).
2. SHEET TO BE 3/8" PVC SHEET TYPE I, GRAY.

DRAWING NOT TO SCALE

DRAWN BY:____	CHECKED BY:____	SAN DIEGO COUNTY DESIGN STANDARD	REVISIONS	APPROVED	DATE
RECOMMENDED BY: JEFF S. MOODY, P.E.					
APPROVED BY COUNTY ENGINEER		PERMEABLE PAVEMENT CHECK DAMS			
_____ DATE: _____ DEYLAMIAN SIROUS, P.E. R.C.E. NO. 53192, EXP 6/30/2017			DRAWING NUMBER	GS-5.4c	

NOTE: THIS DRAWING IS TO BE INCLUDED ON PLANS UNTIL SIGNED BY THE COUNTY ENGINEER. ONCE SIGNED, IT CAN BE REFERENCED ON PLANS

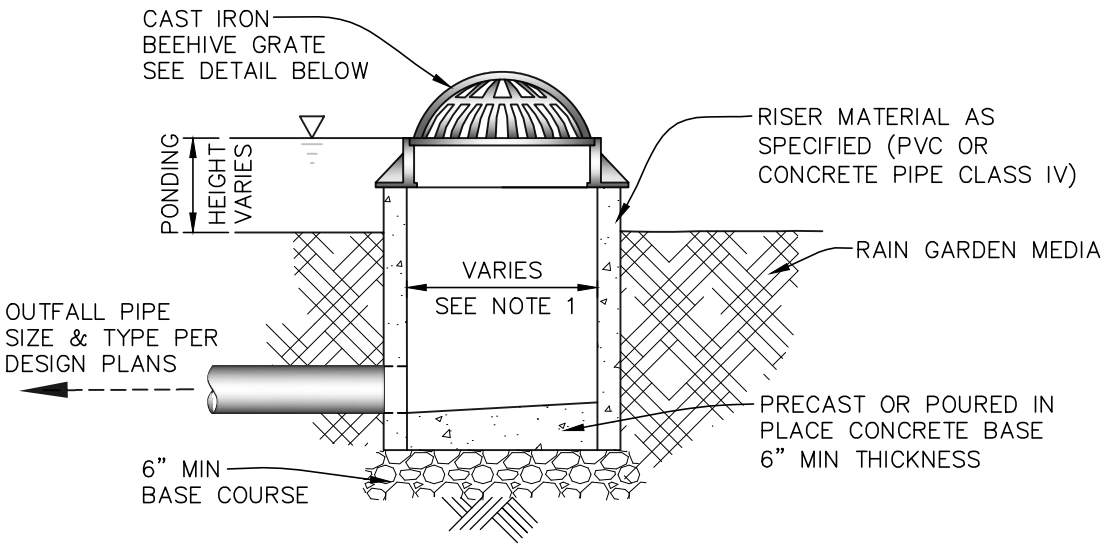

ELEVATION

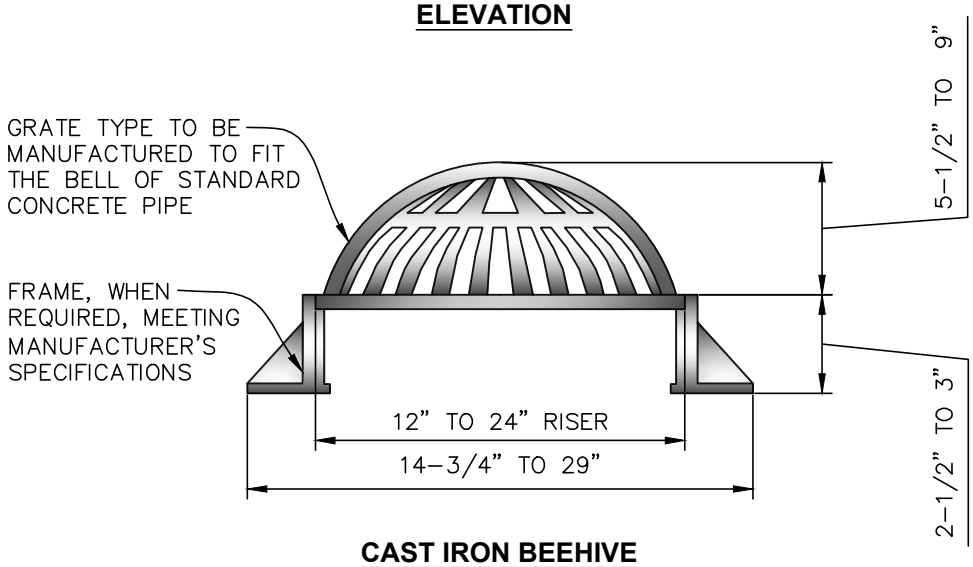

CAST IRON BEEHIVE GRATE DETAIL

NOTES:

1. MINIMUM OPENING SIZE IN GRATE SHALL BE 1-1/4".
2. SIZE OF GRATE SHALL MATCH SIZE OF THE RISER, PER PLANS, SHALL FIT SNUG, AND SHALL BE REMOVABLE FOR MAINTENANCE PURPOSES.
3. ALTERNATIVE MATERIAL TO CAST IRON SHALL BE ALLOWED AS APPROVED BY COUNTY ENGINEER.

DRAWING NOT TO SCALE

DRAWN BY:____	CHECKED BY:____	SAN DIEGO COUNTY DESIGN STANDARD	REVISIONS	APPROVED	DATE
RECOMMENDED BY: JEFF S. MOODY, P.E.					
APPROVED BY COUNTY ENGINEER		**OVERFLOW RISER WITH BEEHIVE GRATE**			
_____ DATE: _____ DEYLAMIAN SIROUS, P.E. R.C.E. NO. 53192, EXP 6/30/2017			DRAWING NUMBER	**GS-6.1**	

NOTE: THIS DRAWING IS TO BE INCLUDED ON PLANS UNTIL SIGNED BY THE COUNTY ENGINEER. ONCE SIGNED, IT CAN BE REFERENCED ON PLANS

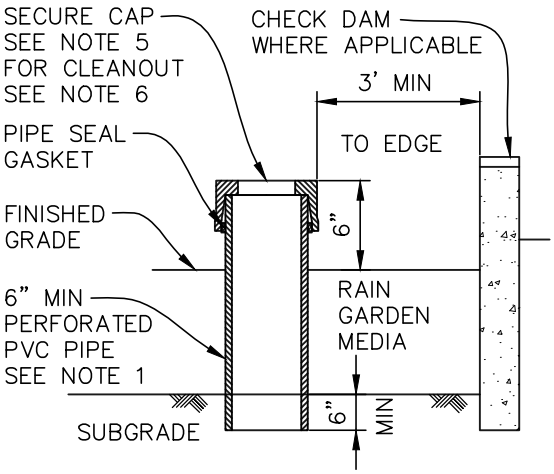

IN RAIN GARDEN

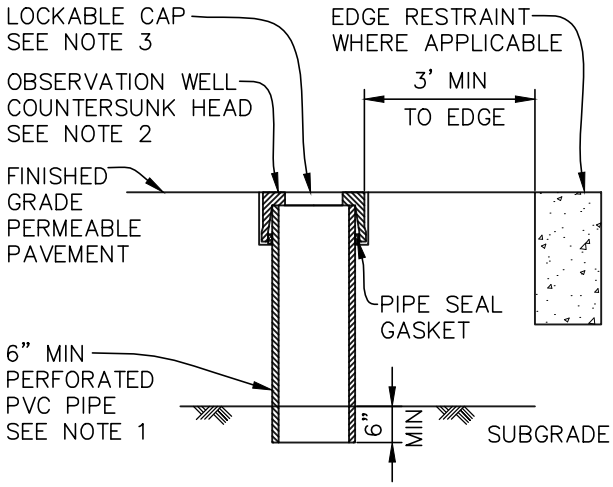

IN PERMEABLE PAVEMENT

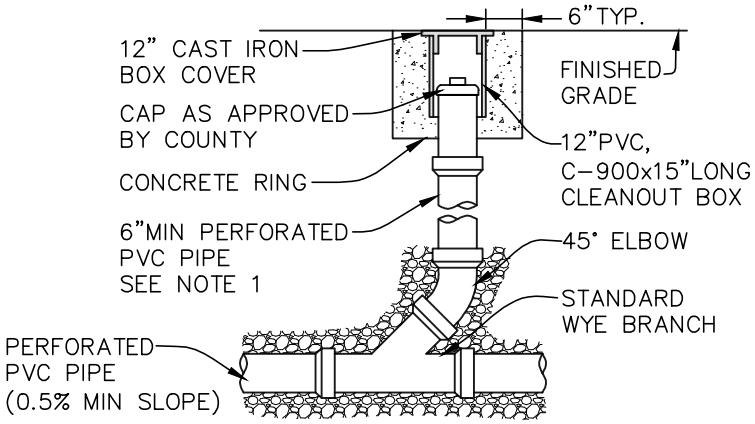

STANDARD WYE BRANCH
SEE SDR SC-01FOR ADDITIONAL DETAILS

CLEANOUT IN PERMEABLE PAVEMENT
(SEE NOTE 6)

NOTES:

1. PROVIDE A TUBE MADE OF NON-CORROSIVE MATERIAL, SCHEDULE 40 PVC OR EQUAL, AT LEAST 3 FEET LONG WITH AN INSIDE DIAMETER OF 6" MINIMUM. PERFORATED PIPE IS REQUIRED FOR ALL OBSERVATION WELLS, OR CLEANOUTS USED AS OBSERVATION WELLS.
2. FACTORY ATTACHED BRASS OR HIGH IMPACT PLASTIC HEAD WITH RIBS TO PREVENT ROTATION WHEN REMOVING LOCKABLE CAP.
3. LOCKABLE CAP SHALL BE BRASS AND RATED FOR HS-20 LOADING IN VEHICULAR AREAS, MOUNTED FLUSH TO GRADE. LOCKABLE CAP MAY BE HIGH IMPACT PLASTIC THAT IS UV STABLE IN NON-VEHICULAR LOADING AREA, AT LEAST 6 INCHES ABOVE GRADE.
4. IN FACILITIES SUBJECT TO VEHICULAR TRAFFIC, CONCRETE APRONS AROUND CLEANOUTS ARE AN OPTION, AS SHOWN IN DESIGN PLANS.
5. CAP ON RISERS IN RAIN GARDEN FACILITY SHALL BE PVC SCREW IN PLUG.
6. FOR CLEANOUT IN RAIN GARDEN (NOT SHOWN), USE SIMILAR DETAIL, BUT USE PVC SCREW CAP SET 6" ABOVE FINISHED GRADE.

DRAWING NOT TO SCALE

DRAWN BY:____	CHECKED BY:____	SAN DIEGO COUNTY DESIGN STANDARD	REVISIONS	APPROVED	DATE
RECOMMENDED BY: JEFF S. MOODY, P.E.					
APPROVED BY COUNTY ENGINEER		STORMWATER FACILITY			
_____ DATE: _____		CLEANOUT/OBSERVATION WELL	DRAWING NUMBER	GS-6.2	
DEYLAMIAN SIROUS, P.E. R.C.E. NO. 53192, EXP 6/30/2017					

NOTE: THIS DRAWING IS TO BE INCLUDED ON PLANS UNTIL SIGNED BY THE COUNTY ENGINEER. ONCE SIGNED, IT CAN BE REFERENCED ON PLANS

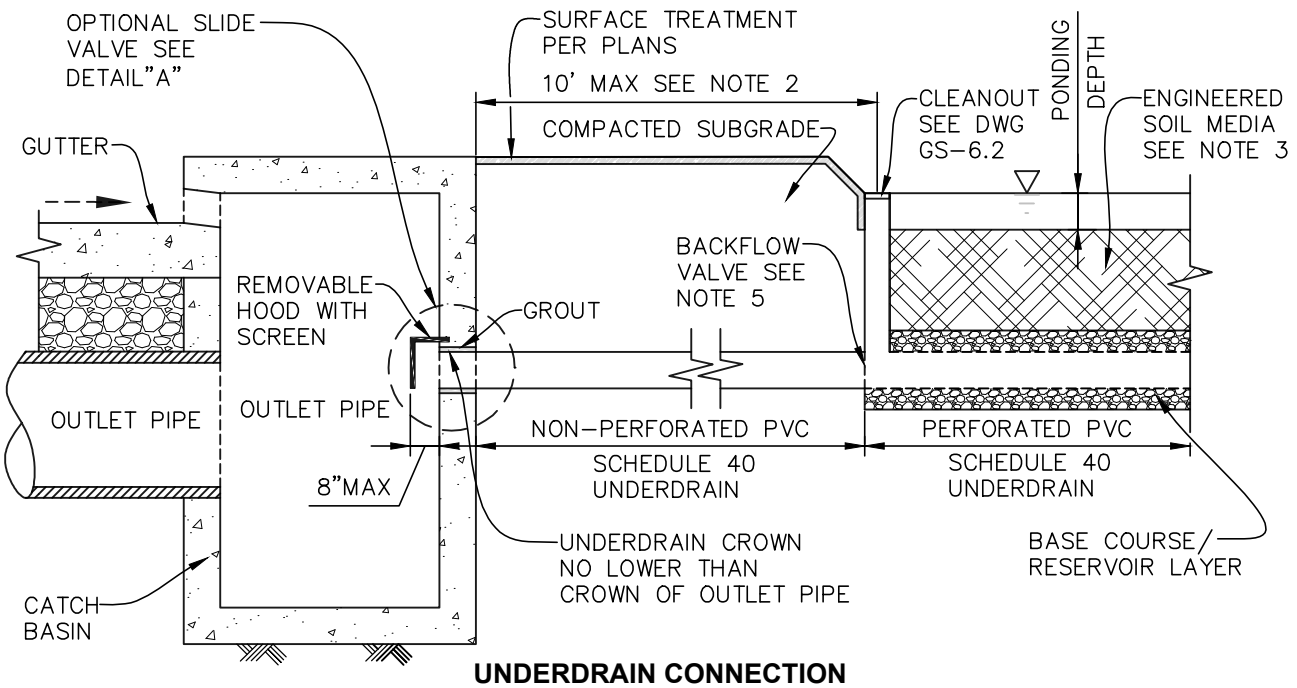

UNDERDRAIN CONNECTION TO CATCH BASINS

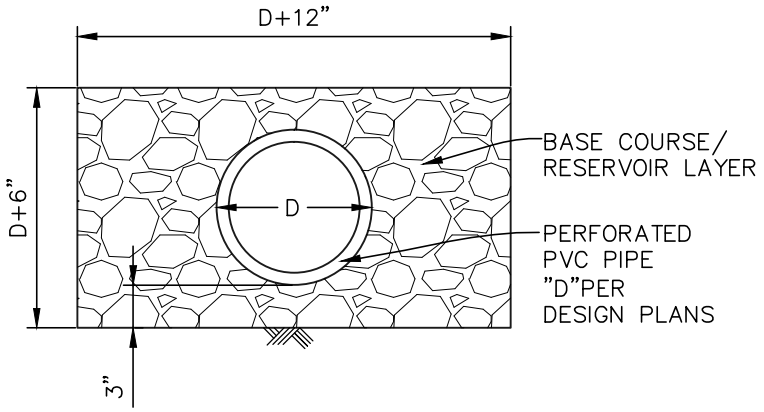

UNDERDRAIN AND BEDDING SECTION

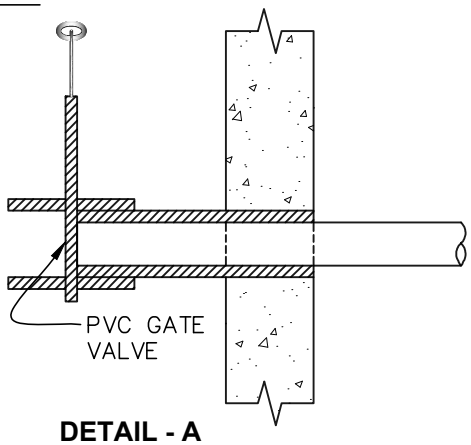

DETAIL - A OPTIONAL SLIDE VALVE

NOTES:

1. CATCH BASIN CONNECTIONS FROM UNDERDRAINS SERVICING PRIVATE PROPERTY ARE PROHIBITED.
2. WHEN STORMWATER FACILITY IS LOCATED > 10' FROM CATCH BASIN, PROVIDE ADDITIONAL CLEANOUT OUTSIDE OF STORMWATER FACILITY WITHIN 10' OF CATCH BASIN.
3. STORMWATER FACILITY DEPICTED IS RAIN GARDEN PRACTICE. CONNECTIONS TO CATCH BASIN WILL ALSO APPLY TO PERMEABLE PAVEMENTS AND SWALES WITH UNDERDRAINS.
4. OPTIONAL PVC GATE VALVE TO BE USED TO REGULATE FLOW IN UNDERDRAIN PIPE AS INDICATED IN PLANS. VALVE MAY ALSO BE USED IN OVERFLOW RISER AS DIRECTED.
5. PVC PIPE SLOPE SHALL BE PER PLAN.

DRAWING NOT TO SCALE

DRAWN BY:____ CHECKED BY:____	SAN DIEGO COUNTY DESIGN STANDARD	REVISIONS	APPROVED	DATE
RECOMMENDED BY: JEFF S. MOODY, P.E.				
APPROVED BY COUNTY ENGINEER	**STORMWATER FACILITY UNDERDRAIN BEDDING & CATCH BASIN CONNECTION**			
DATE: ____ DEYLAMIAN SIROUS, P.E. R.C.E. NO. 53192, EXP 6/30/2017		DRAWING NUMBER	**GS-6.3**	

NOTE: THIS DRAWING IS TO BE INCLUDED ON PLANS UNTIL SIGNED BY THE COUNTY ENGINEER. ONCE SIGNED, IT CAN BE REFERENCED ON PLANS

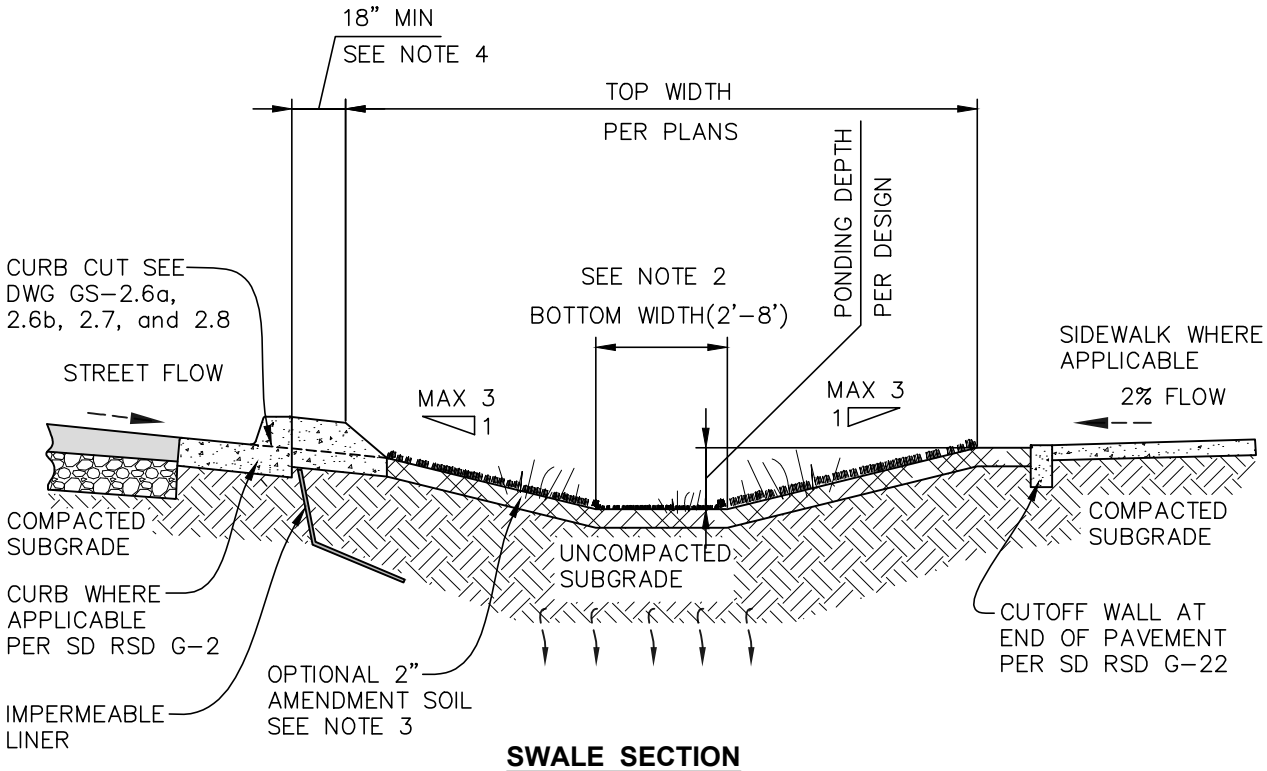

SWALE SECTION

NOTES:

1. PROVIDE PROTECTION FROM ALL VEHICLE TRAFFIC, EQUIPMENT STAGING, AND FOOT TRAFFIC IN PROPOSED INFILTRATION AREAS PRIOR TO, DURING, AND AFTER CONSTRUCTION.
2. DIMENSIONS:
   a. BOTTOM WIDTH: IF WIDER THAN 8', CHANNEL DIVIDERS MAY BE NECESSARY TO PREVENT MEANDERING AND LOW FLOW CHANNEL FORMATION.
   b. FLOW DEPTH: WATER QUALITY DESIGN FLOW DEPTH NOT TO EXCEED TWO THIRDS THE HEIGHT OF THE VEGETATION FOR OPTIMUM WATER QUALITY TREATMENT.
   c. LONGITUDINAL SLOPE: 1% TO 6% OVERALL SLOPE. SLOPES GREATER THAN 2.5% SHOULD INCORPORATE 6"-18" CHECK DAM TO MAINTAIN 2.5% MAX LONGITUDINAL INVERT SLOPE. MAXIMUM FLOW VELOCITY SHALL MEET REQUIREMENTS OF COUNTY HYDRAULIC DESIGN MANUAL.
3. OPTIONAL 2" SOIL AMENDMENT PER SWALE SOIL SPECIFICATION; MIX THE AMENDMENT INTO NATIVE SOILS TO A DEPTH OF 6" TO PREVENT SOIL LAYERING.
4. 18" MINIMUM CONCRETE STEP OUT REQUIRED WHEN PARKING IS ADJACENT TO CURB.

DRAWING NOT TO SCALE

DRAWN BY:____	CHECKED BY:____	SAN DIEGO COUNTY DESIGN STANDARD	REVISIONS	APPROVED	DATE
RECOMMENDED BY: JEFF S. MOODY, P.E.					
APPROVED BY COUNTY ENGINEER		GREEN STREET VEGETATED SWALE WITH CURB			
_____ DATE: _____ DEYLAMIAN SIROUS, P.E. R.C.E. NO. 53192, EXP 6/30/2017			DRAWING NUMBER	GS-7.1	

NOTE: THIS DRAWING IS TO BE INCLUDED ON PLANS UNTIL SIGNED BY THE COUNTY ENGINEER. ONCE SIGNED, IT CAN BE REFERENCED ON PLANS

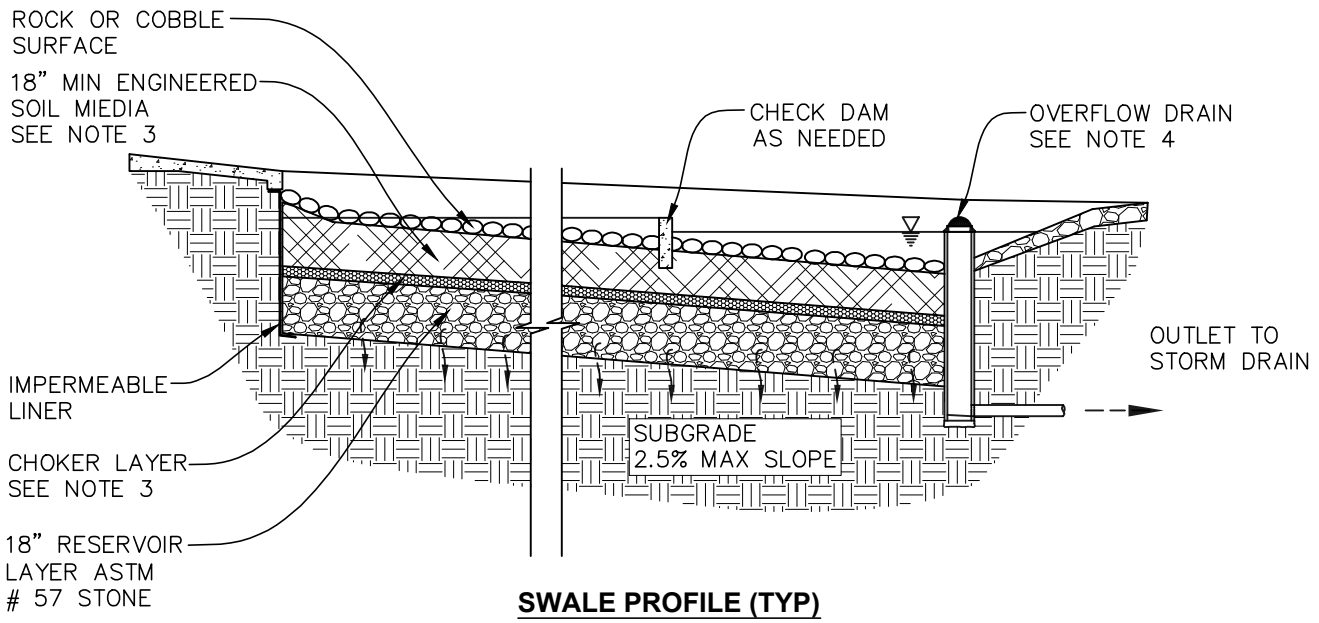

SWALE PROFILE (TYP)

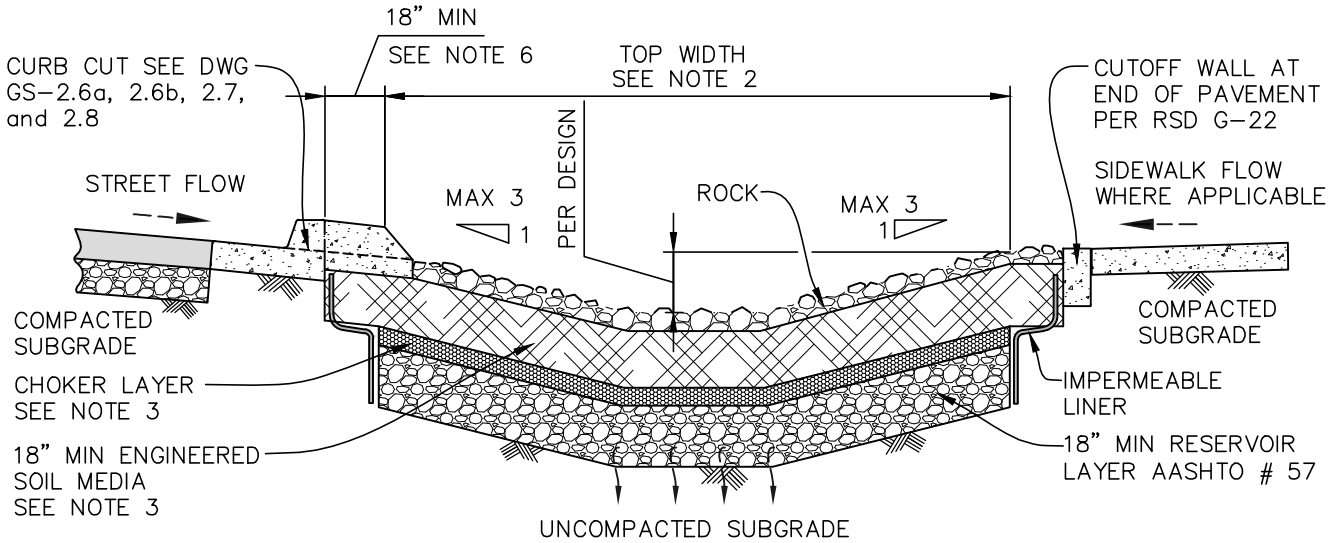

SWALE SECTION (TYP)

NOTES:

1. PROVIDE PROTECTION FROM ALL VEHICLE TRAFFIC, EQUIPMENT STAGING, AND FOOT TRAFFIC IN PROPOSED SWALE AREAS PRIOR TO, DURING, AND AFTER CONSTRUCTION.
2. DIMENSIONS:
   a. WIDTH 4' MINIMUM.
   b. DEPTH FROM TOP OF GROWING MEDIUM TO OVERFLOW ELEVATION; SIMPLIFIED: 6"–18".
   c. LONGITUDINAL SLOPE OF SWALE: 2.5% MAX.
3. MATERIALS
   a. ENGINEERED SOIL MEDIA: 65% SAND, 20% SANDY LOAM, 15% COMPOST (OR PER SPECIFICATIONS).
   b. CHOKER LAYER: 2"–4" WASHED SAND OVER 2" CHOKING STONE.
4. OVERFLOW:
   a. ALLOW FOR 2" OF FREEBOARD, MINIMUM.
   b. PROTECT FROM DEBRIS AND SEDIMENT WITH STRAINER OR GRATE.
5. BOTTOM OF SWALE SHALL BE AT LEAST 10' ABOVE THE SEASONAL HIGH WATER TABLE OR 2' ABOVE BEDROCK, AS DETERMINED BY GEOTECHNICAL INVESTIGATION.
6. 18" MINIMUM CONCRETE STEP OUT ZONE REQUIRED WHEN PARKING IS ADJACENT TO CURB.

DRAWING NOT TO SCALE

DRAWN BY:____ CHECKED BY:____	SAN DIEGO COUNTY DESIGN STANDARD	REVISIONS	APPROVED	DATE
RECOMMENDED BY: JEFF S. MOODY, P.E.				
APPROVED BY COUNTY ENGINEER	**ROCK INFILTRATION SWALE**			
____ DATE: ____ DEYLAMIAN SIROUS, P.E. R.C.E. NO. 53192, EXP 6/30/2017		DRAWING NUMBER	**GS-7.2**	

NOTE: THIS DRAWING IS TO BE INCLUDED ON PLANS UNTIL SIGNED BY THE COUNTY ENGINEER. ONCE SIGNED, IT CAN BE REFERENCED ON PLANS

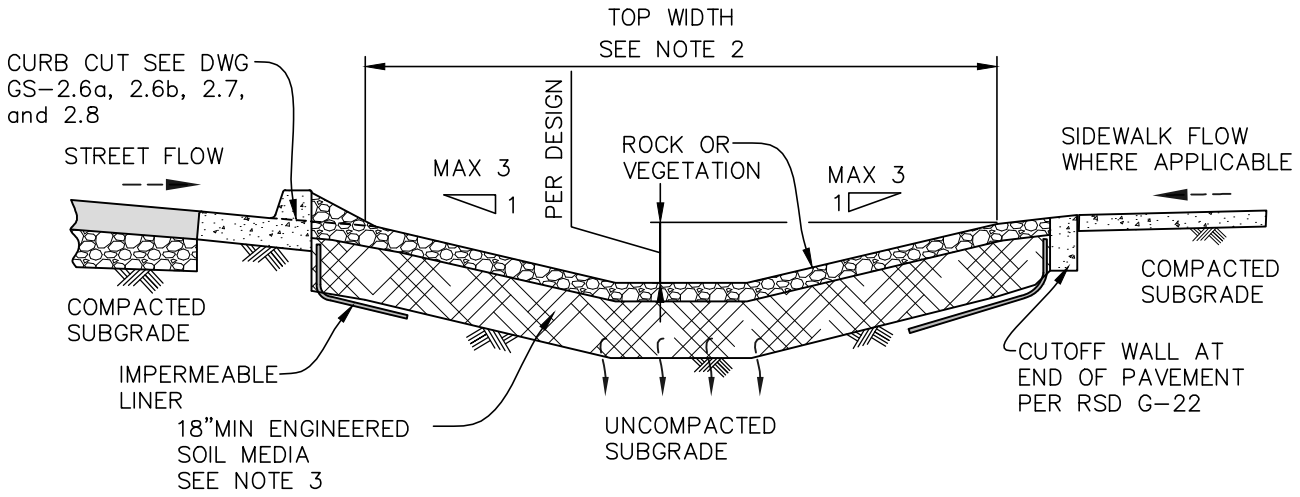

BASIN SECTION

NOTES:

1. PROVIDE PROTECTION FROM ALL VEHICLE TRAFFIC, EQUIPMENT STAGING, AND FOOT TRAFFIC IN PROPOSED BASIN AREAS PRIOR TO, DURING, AND AFTER CONSTRUCTION.
2. DIMENSIONS:
   a. WIDTH 4' MINIMUM.
   b. DEPTH (FROM TOP OF GROWING MEDIUM TO OVERFLOW ELEVATION) 6"–18".
   c. LONGITUDINAL SLOPE OF BASIN: FLAT
3. MATERIALS OF ENGINEERED SOIL MEDIA: 65% SAND, 20% SANDY LOAM, AND 15% COMPOST, OR PER SPECIFICATION
4. OVERFLOW:
   a. ALLOW FOR 2" OF FREE BOARD, MINIMUM.
   b. PROTECT FROM DEBRIS AND SEDIMENT WITH STRAINER OR GRATE.
5. BOTTOM OF BASIN SHALL BE AT LEAST 10' ABOVE THE SEASONAL HIGH WATER TABLE OR 2' ABOVE BEDROCK, AS DETERMINED BY GEOTECHNICAL INVESTIGATION.

DRAWING NOT TO SCALE

DRAWN BY:____	CHECKED BY:____	SAN DIEGO COUNTY DESIGN STANDARD	REVISIONS	APPROVED	DATE
RECOMMENDED BY: JEFF S. MOODY, P.E.					
APPROVED BY COUNTY ENGINEER		RAIN GARDEN/ROCK GARDEN INFILTRATION			
_____ DATE: _____ DEYLAMIAN SIROUS, P.E. R.C.E. NO. 53192, EXP 6/30/2017			DRAWING NUMBER	GS-7.3	

NOTE: THIS DRAWING IS TO BE INCLUDED ON PLANS UNTIL SIGNED BY THE COUNTY ENGINEER. ONCE SIGNED, IT CAN BE REFERENCED ON PLANS

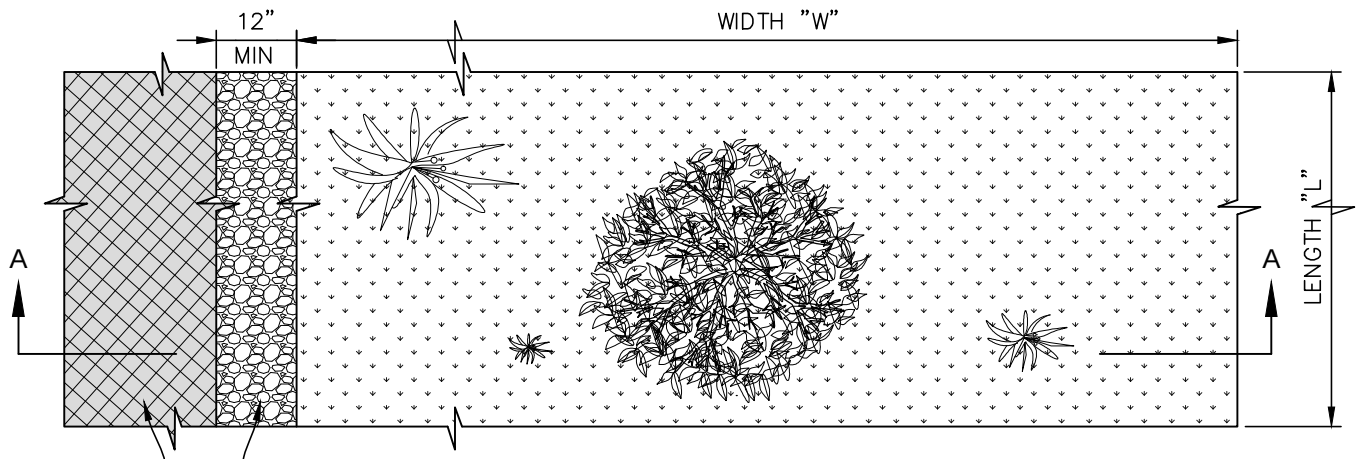

PLAN VIEW

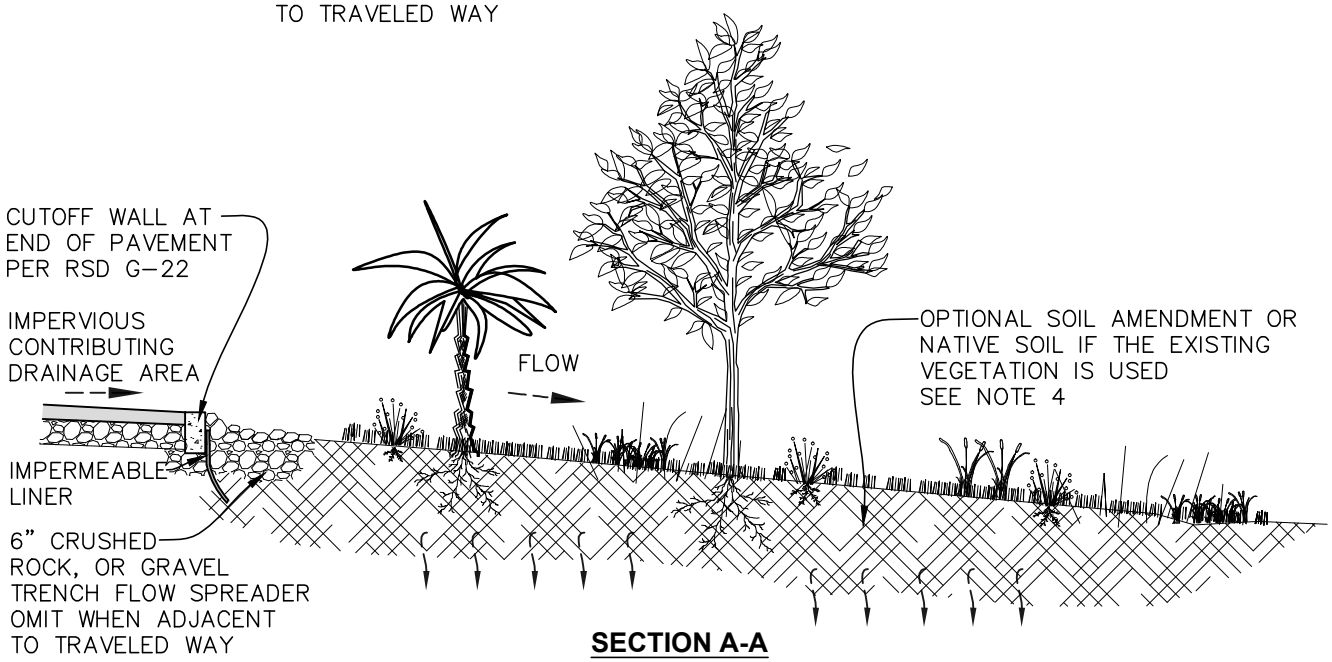

SECTION A-A

NOTES:

1. PROVIDE PROTECTION FROM ALL VEHICLE TRAFFIC, EQUIPMENT STAGING, AND FOOT TRAFFIC IN PROPOSED INFILTRATION AREAS PRIOR TO, DURING, AND AFTER CONSTRUCTION.

2. DIMENSIONS:
   a. WIDTH: 15' MIN (SHOULD ALLOW FOR 10 MINUTES HYDRAULIC RESIDENCE TIME).
   b. SLOPES: 5% MAXIMUM.
   c. FLOW DEPTH: 1" MAXIMUM.

3. VEGETATION COVER MAINTAINED AT HEIGHT OF 4" MINIMUM.

4. OPTIONAL 2" SOIL AMENDMENT PER PROJECT SOIL SPECIFICATIONS. MIX THE AMENDMENT INTO NATIVE SOIL TO A DEPTH OF 6" TO PREVENT SOIL LAYERING.

DRAWING NOT TO SCALE

DRAWN BY:____	CHECKED BY:____	SAN DIEGO COUNTY DESIGN STANDARD	REVISIONS	APPROVED	DATE
RECOMMENDED BY: JEFF S. MOODY, P.E.					
APPROVED BY COUNTY ENGINEER		VEGETATED FILTER STRIP			
____ DATE: ____ DEYLAMIAN SIROUS, P.E. R.C.E. NO. 53192, EXP 6/30/2017			DRAWING NUMBER	GS-7.4	

NOTE: THIS DRAWING IS TO BE INCLUDED ON PLANS UNTIL SIGNED BY THE COUNTY ENGINEER. ONCE SIGNED, IT CAN BE REFERENCED ON PLANS

This page was intentionally left blank

K.5 Green Streets Maintenance Schedule

This page was left intentionally blank.

Green Streets
Maintenance Schedule

County of San Diego
Department of Public Works

January 2016

Table of Contents

Section 1 Introduction 1

Section 2 Maintenance Schedule 2

Tree Wells 2

Rain Gardens and Rock Gardens 3

Permeable Interlocking Concrete Pavers 5

Permeable Concrete Pavement 7

Permeable Asphalt Concrete Pavement 9

Section 1 Introduction

The following maintenance schedule provides the maintenance tasks, frequency, and time of year for initial, routine, and as-needed maintenance for the following Green Streets facilities:

- Tree Wells,
- Rain Gardens,
- Rock Gardens, and
- Permeable Pavement.

This schedule should be used as a guideline for preparing a project specific maintenance schedule.

Section 2 Maintenance Schedule

Tree Wells			
When	**Maintenance Task**	**Frequency**	**Time of the Year**
Initial maintenance during establishment period (First three years)	Inspect tree for health and establishment and report any changes to County	Three times during establishment; Every five years for life of tree	Spring 1st Season Fall 1st Season Fall 2nd Season
	Remove stakes and wires.	One time	One year after planting
	Water tree – first year	25 gallons Weekly via slow release device	April-October
	Water tree – second & third year	25 gallons Bi-Monthly via slow release device	April-October
Routine Maintenance	Remove weeds and trash	Quarterly inspection at minimum and maintenance as needed.	March-November
	Remove sediment and trash from any inlets and slot drains	Annually or as needed.	
As-Needed Maintenance	Mulch with 3 inches double ground shredded hardwood mulch. Place mulch in a ring to capture rain water. Mulch shall not be mounded around tree.	Annually or as needed.	Feb-April
	Inspect tree for damage, disease, or interference with utilities. Contact County if pruning is required.	Annually or as needed.	Broken branches should be pruned at any time. Most trees should be pruned in the winter or fall.

Rain Gardens and Rock Gardens

When	Maintenance Task	Frequency	Time of the Year
Initial maintenance during establishment period (First three years)	Within 6 months following construction, the practice and drainage area should be inspected after storm events.	Twice after installation	Following storm events
	Remove stakes, wires, and tags on any new trees.	One time	One year after planting
	Water plants if applicable - initial three years	Weekly during first 2-3 months after installation, and when rainfall is less than 1 inch per week	April-October
Routine Inspection	• Conduct maintenance inspections • Check curb cuts and inlets for accumulated grit, leaves, and debris that may block inflow • Identify maintenance tasks needed • Look for erosion, bare areas, and where mulch, if applicable, needs to be applied	Quarterly inspection at minimum and maintain as needed.	
Routine Maintenance	• Spot weed • Adjust mulch, if applicable, as needed to ensure full cover • Remove trash and animal waste • Remove any dead or diseased plants • Remove sediment in pretreatment cells and inflow points • Mow filter strips with turf cover	Quarterly inspection at minimum and maintain as needed.	
	Mulch as needed to replace 3" surface cover	Annually or as needed.	February - April
As-Needed Maintenance	Prune trees and shrubs as needed to keep inlets and outlets clear.	As-needed	Feb-April and Sep - Nov as Appropriate

When	Maintenance Task	Frequency	Time of the Year
	Water plants, if applicable, after three years	Weekly during droughts (more than 2 weeks of no rain)	April-October
	• Remove invasive plants using recommended control methods • Add planting to maintain desired vegetation density, if applicable • Blow-off cleanouts using compressed air, high pressure water hose, or drain snake in practices that show evidence of clogged underdrain • Stabilize the surrounding drainage area to prevent erosion. • Repair or replace cracked pipes or planter box if cracks are greater than 1" • Secure or repair the liner, if applicable, if loose or damaged • If scouring is occurring at inlets, add splash pads or rock protection • Adjust the overflow structure if less than 6" above soil surface or 2" below waterproof liner/top of facility	As needed following inspection	• At appropriate time for disease or pest treatment. • October-April
	Replace drain rock surface material, if applicable, if water ponds at surface during storm events or operates at less than 90% of the design infiltration rate.	As needed following inspection	
	Remove and replace the mulch layer, if applicable	Once every 3 years	February-April

Permeable Interlocking Concrete Pavers

When	Maintenance Task	Frequency	Time of Year
Initial maintenance during establishment period (First year)	In the first year following construction, inspect the practice and contributing drainage area twice within 24 hours after storm events. Conduct any needed repairs or stabilization.	Twice after Installation	Within 24 hours after storm events
Routine Inspection	Conduct a maintenance inspection	Annually or as needed.	
Routine Maintenance	Mechanically sweep pavement to remove sediment using: - Conventional broom sweeper (acceptable for removing crust when joints/apertures are accessible to brushes) - Regenerative air sweeper (better option for maintaining permeable pavements) - Pure vacuum machines (best for restoration if clogged)	4 times per year in potential high sediment load areas, 2 times per year otherwise	Fall
	Remove any accumulated sediment in pretreatment cells and inflow points if applicable	Annually or as needed.	April -October
	Spot weed.		
As-Needed Maintenance	Stabilize contributing drainage area within public land to prevent siltation of pavement	As needed following annual inspection	

When	Maintenance Task	Frequency	Time of Year
	Maintain planted areas adjacent to pavement. Remove any soil or sediment deposited on pavement. Replace or repair any paver surfaces that are damaged that may compromise structural integrity of the surface. Repair ruts or deformations exceeding 0.5".		
	Blow-out cleanouts using compressed air, high pressure water hose, or drain snake in practices that show evidence of clogged underdrain.	If clogged	
	Conduct maintenance using a vacuum machine.		
	Replace any necessary joint filler material	As needed.	

Permeable Concrete Pavement

When	Maintenance Task	Frequency	Time of Year
Initial maintenance during establishment period (First year)	In the first year following construction, inspect the practice and contributing drainage area twice within 24 hours after storm events. Conduct any needed repairs or stabilization.	Twice after Installation	Within 24 hours after storm events
Routine Inspection	Conduct a maintenance inspection	Annually or as needed.	
Routine Maintenance	Mechanically sweep pavement with a vacuum sweeper or regenerative street sweeper to remove sediment	4 times per year in potential high sediment load areas, 2 times per year otherwise	
	Remove any accumulated sediment in pretreatment cells and inflow points if applicable	Annually or as needed.	Fall
	Spot weed for vegetation growth in pavement.	Annually or as needed.	April -October
As-Needed Maintenance	Stabilize contributing drainage area within public land to prevent siltation of pavement	As needed following annual inspection	
	Maintain planted areas adjacent to pavement. Remove any soil or sediment deposited on pavement.		

When	Maintenance Task	Frequency	Time of Year
	Replace or repair any pavement surfaces that are degenerating. For damaged areas of less than 50 square feet, a declivity could be patched by any means suitable with standard pavement, with the loss of porosity of that area being insignificant. The declivity can also be filled with porous mix. If an area greater than 50 SF is in need of repair, approval of patch type must be sought from either the engineer or owner.		
	Blow-out cleanouts using compressed air, high pressure water hose, or drain snake in practices that show evidence of clogged underdrain.	If clogged	
	Conduct maintenance using a regenerative street sweeper, or power washing (<500 psi, at an angle 30 or less).		

Permeable Asphalt Concrete Pavement

When	Maintenance Task	Frequency	Time of Year
Initial maintenance during establishment period (First year)	In the first year following construction, inspect the practice and contributing drainage area twice within 24 hours after storm events. Conduct any needed repairs or stabilization.	Twice after Installation	Within 24 hours after storm events
Routine Inspection	Conduct a maintenance inspection	Annually or as needed.	
Routine Maintenance	Mechanically sweep pavement with a vacuum sweeper or regenerative street sweeper to remove sediment	4 times per year in potential high sediment load areas, 2 times per year otherwise	
	Remove any accumulated sediment in pretreatment cells and inflow points if applicable	Annually or as needed.	Fall
	Spot weed for vegetation growth in pavement.	Annually or as needed.	April -October

When	Maintenance Task	Frequency	Time of Year
As-Needed Maintenance	Stabilize contributing drainage area within public land to prevent siltation of pavement	As needed following annual inspection	
	Maintain planted areas adjacent to pavement. Remove any soil or sediment deposited on pavement.		
	Replace or repair any pavement surfaces that are degenerating. For damaged areas of less than 50 square feet, a declivity could be patched by any means suitable with standard pavement, with the loss of porosity of that area being insignificant. The declivity can also be filled with porous mix. If an area greater than 50 SF is in need of repair, approval of patch type must be sought from either the engineer or owner.		
	Blow-out cleanouts using compressed air, high pressure water hose, or drain snake in practices that show evidence of clogged underdrain.	If clogged	
	Conduct maintenance using a regenerative street sweeper, or power washing (<500 psi, at an angle 30 or less).		
	Sealing is a common maintenance practice with conventional asphalt. Pervious asphalt must not be sealed or it will lose its pervious function. Owners should take extra care not to seal pervious asphalt pavement. If porous pavement is sealed, additional stormwater treatment may be required.		

K.6 Green Streets Specifications

This page was left intentionally blank.

Green Streets Specifications

County of San Diego Department of Public Works

January 2016

TABLE OF CONTENTS

AGGREGATES FOR GREEN STREETS FACILITIES.....1-1

GEOSYNTHETICS FOR GREEN STREETS FACILITIES.....2-1

UNDERDRAINS FOR STORMWATER FACILITIES.....3-1

PERMEABLE CONCRETE PAVEMENT 4-1

PERMEABLE ASPHALT PAVEMENT 5-1

PERMEABLE INTERLOCKING CONCRETE PAVERS 6-1

ENGINEERED SOILS: RAIN GARDEN, PLANT BED, AND SAND BASED SOILS 7-1

DOMED OVERFLOW RISER 8-1

CHECK DAMS FOR STORMWATER FACILITIES 9-1

TREE SPACE GRATE CATCH BASIN 10-1

AGGREGATES FOR GREEN STREETS FACILITIES

(A) DESCRIPTION

This item shall consist of constructing base courses for permeable pavements and rain garden facilities to the specified depths on a prepared foundation conforming to the lines, grades and cross sections shown in the contract documents. Base courses may include reservoir layer, storage layer, choker layer, filter layer, and other layers included in the Contract Documents. Except as herein stated, the requirements for control of materials, submittals, sampling, and testing items specified in Green Book Standard Specification section 4 “Control of Materials” not described in sections below, are applicable to this specification.

(B) SUBMITTALS

Source Approval: Submit documentation of materials to the County as directed by the County Engineer prior to construction as follows:

1. Material Source -Certificate
2. Cleanliness – Certification that stone is double-washed per this provision.
3. Properties -Certified Test Results for:
   a) Gradation
   b) Smoothness
   c) Percentage of Wear
4. Sample: Prior to production and delivery of aggregates, take at least one (1) initial sample in accordance with ASTM D75. Collect each sample by taking three (3) incremental samples at random locations from source material to make a composite sample. See Table 1-1 for minimum sampling requirements. Repeat sampling procedure when source of material is changed or when deficiencies or variations from specified grading of materials are found in testing.

Table 1-1: Minimum Sampling Requirements

MATERIAL	MINIMUM SAMPLE REQUIRED	WORKING DAYS TO OBTAIN VERBAL TEST RESULTS
Admixtures (Portland Cement Concrete)	See 814	
Aggregate, Coarse (PVV & Asphalt)	70 Pounds	5
Aggregate, Fine Bituminous	20 Pounds	5
Blanket	10 Pounds	
Concrete	20 Pounds	
Filter	10 Pounds	
Mortar	10 pounds	
Vertical	10 pounds	
Aggregate, Source (new)	200 pounds	60
Anchor Bolts	1 specimen per lot	6
Asphalt Cement (complete)	Standard 16 oz. can	5
Asphalt Cores	Job Dependent	1
Asphalt, Cut-Back	1 quart	5
Asphalt, Emulsified	4 quarts	5
Asphalt Primer for Waterproofing	1 quart	5
Asphalt Seal Coat for Waterproofing	1 quart	5
Bituminous Mixtures	12 pounds	12
Job Mix Formulas	75 pounds	21
Brick		
Building	10 specimens	12
Sewer	10 specimens	12
Burlap	3 foot length x width of roll	4
Caulking Compound	1 pint	20
Canvas Ceramic Tile	2 square yards	4
Concrete Mix Design	25 specimens	40
Concrete, Wet (Dunagan)	6 cubic feet	50
Dowel Bars	30 pounds	
Electrical Items	3 specimens	6
Expansion Joint Filler	Job Dependent	16
Gravel	3 foot length x width (4- ½ inch min)	
High Tensile Strand (or wire)	70 pounds	
Load Transfer Devices	5 foot length	11
Masonry Cement	1 specimen	6
Membrane (liquid) Curing	10 pounds	16
Compound	1 quarts	6

Table 1-1 (continued): Minimum Sampling Requirements

MATERIAL	MINIMUM SAMPLE REQUIRED	WORKING DAYS TO OBTAIN VERBAL TEST RESULTS
Mineral Fiber Paint and Coatings (2)	5 pounds	5
Pipe		
Clay	4-1 quart cans	30
Concrete	2 specimens	6
Polyethylene Sheeting	2 yards x 10 inches	11
Portland Cement	10 pounds	
Preformed Bearing Pads	4 inch x 4 inch	
Prestressed Reinforcement	Per Section 815.02	
Reinforcing Steel		
Bars Nos. 2 through 9	1 specimen 5 feet in length	6
Bars larger than No. 9	1 specimen 7 feet in length	6
Saturated Cotton Fabric	4 foot length x width of roll	6
Sealing Compounds		
Cold Poured, Emulsion	1 quart	16
Cold Poured, Mastic	1 quart	16
Cold Poured, Two-component	1 quart	20
Hot Poured	5 pounds	16
Shear Connector Studs	1 specimen	
Soils		
Gradation LL and PI	20 pounds	5
Gradation and Proctor	100 pounds	6
Top Soil	20 pounds	11
Subgrade Paper	3 foot length x width of roll	6
Tar (Creosote) Primer for Waterproofing	1 quart	6
Tar, Road	1 quart	6
Tar Seal, Coat for Waterproofing	1 quart	6
Tie rod assemblies	3 specimens	6
Waterproof Paper	2 square yards	11
Waterstop, Rubber	2 square feet	11
Waterstop, PVC	2 square feet	30
Weld Wire Fabric	3 feet x 3 feet	6
Miscellaneous Materials and Tests		
Determining Thickness of Metals	Representative sample	6
Determining Unit Weight of Metals	Representative sample	6
Determining Thickness of Galvanizing	Representative sample	6
Identification of Wrought Iron Infa Red Spectrum	Representative sample	2

(C) MATERIALS

1. Coarse aggregate shall be of the types designated in the Contract Documents, and shall consist of clean, tough, durable fragments of crushed stone, or crushed gravel, conforming to the gradations in Table 1-2 and shall also meet the following:
   a) Be double-washed, sufficient to remove dust and other coatings; and
   b) Be free from clay balls, organic matter, and other deleterious substances

2. Reservoir/storage layer for permeable pavements shall also meet the following:

a) Maximum percentage of wear as determined by the Los Angeles Abrasion Test shall not exceed 40, as per AASHTO T 96. The weighted percentage of loss shall not exceed 15 percent by weight when the coarse aggregate is subjected to 5 cycles of the magnesium soundness test per AASHTO T 104.
b) Minimum 75% by mass (weight) of the material coarser than the No. 4 sieve with at least two (2) fractured faces, and 90% shall have one or more fractured faces as determined by ASTM D5821;
c) Have not more than 5% of flat or elongated pieces (>5:1) as specified in ASTM D4791;
d) Material shall have a California bearing ratio (CBR) of at least thirty (30) as determined by laboratory test on a four (4) day soaked sample in accordance with ASTM D1883.

Table 1-2: Gradation for Base Courses

Pavement Reservoir Layer	Choker Layer for Permeable Pavements	Filter Layer	Rain Garden Storage/Drainage Layer
AASHTO No. 2 or No. 3 Stone	AASHTO No. 57 Stone	AASHTO No. 8 Stone	AASHTO No. 57 Stone

Table 1-2B: Stone type Used in Green Street Elements

Layer	Permeable Pavements	Rain Gardens
Reservoir Layer	AASHTO No.2 or No.3	AASHTO No. 57
Choker layer	AASHTO No. 57	See Table 1-3
Filter Layer	AASHTO No. 8	AASHTO No. 8

3. Choker Course for Rain Garden shall be a free-draining sand and gravel borrow shall consist of inert, hard, durable stone and coarse sand, free from loam, clay, mica, surface coatings and deleterious materials and shall conform with the following:

Table 1-3 Gradation of Choker Layer used for Rain Gardens

U.S. Sieve No.	% Passing by Weight	
	Minimum	Maximum
3 inch	100	-
½ inch	60	-
#4	40	100
#50	8	28
#200	0	8

Saturated hydraulic conductivity of the sand and gravel shall be not less than 10 inches per hour according to ASTM D5856-95 (2000) when compacted to a minimum of 95% Standard Proctor, ASTM 698.

(D) PREPARATION OF GRADE

Excavation and sub-grade preparation to the lines and grades shown on the Contract Documents shall be required:

1. Sub-grade shall not be compacted for installations where contract documents specify a minimum infiltration rate for the sub-grade.
2. For permeable pavements with soft or yielding soils in locations specifying a minimum infiltration rate for the sub-grade, Contractor shall install geogrid in accordance with contract documents. Geotextile fabric shall not be used.
3. For permeable pavements where no minimum infiltration rate is specified for the sub-grade, Contractor shall be allowed to perform subgrade compaction, and can utilize geotextile fabric or impermeable liners as specified in the Contract Documents.
4. Where erosion of sub-grade has caused accumulation of fine materials and/or surface ponding, this material shall be removed with light equipment and the underlying soils scarified to a minimum additional depth of 6 inches with a rake and a tracked vehicle used in combination, or equivalent.
5. Construction equipment shall not be allowed on the subgrade depending on the thickness of the section that is designed, except as noted above.

(E) HAULING

Trucks meeting the same cleanliness requirements of the double washed materials shall be used during hauling. Trucks shall be inspected and cleaned prior to each use.

(F) LIMITATIONS ON PLACING

Do not install aggregate base course when rainfall or other weather conditions will detrimentally affect the quality of the work.

(G) PLACING, SHAPING AND COMPACTING

1. Upon completion of sub-grade work, the Engineer shall be notified and shall inspect the sub-grade before the Contractor continues installation. Owner or Engineer shall have the option to perform infiltration testing on the subgrade to verify minimum infiltration rates, at the Contractor's expense where specified on the contract documents.
2. Any accumulation of debris or sediment which takes place after approval of sub-grade shall be removed prior to installation continuing at no extra cost.
3. Place geosynthetics, impermeable liner, pipe, and aggregate as required on the contract documents immediately after approval of sub-grade in accordance with Green Book Standard Specifications section 213 "Engineering Geosynthetics".

4. Do not dump aggregate base course in piles, but evenly spread and place aggregate on the prepared sub-grade in layers of uniform thickness without segregation. Where the base course is constructed in more than one layer, clean previously constructed layers of loose and foreign matter prior to placing subsequent layers.
5. Moisten and roll each lift of aggregate with a 10-ton roller, keeping equipment movement over exposed sub-grades to a minimum. Roll each lift between 4 and 6 passes. If a required depth of aggregate in a lift exceeds ten (10) inches, the aggregate layer shall be rolled in ten (10) inch lifts.
6. Make adjustments in placing procedures or equipment to obtain true grades, to minimize segregation and degradation, to reduce or increase water content, and to insure a satisfactory aggregate base course.

(H) FINISHING

1. Geosynthetics along Edges – Geotextile fabric or impermeable liners, or both, shall be used along the edges or sides of aggregate base course materials for permeable pavement and rain garden as specified in the contract documents. Following placement of an aggregate base course, and at the conclusion of each day's work, the geotextile or impermeable liner, or both, shall be folded back and secured to protect from sediment washout along all bed edges. At least a two foot (2') strip shall be used to protect stone from adjacent bare soil. This edge strip shall remain in place until all bare soils contiguous to beds are stabilized and fully vegetated or until the wearing surface for the permeable pavement has been placed.
2. Unfinished Edges Of Base Course – In fill conditions, place earth or other approved materials along any unfinished edges of the base course in such quantity that it will compact to the thickness of the aggregate base course being constructed. In each operation, allow at least a two (2) foot width of the shoulder along all unfinished edges to be rolled and compacted simultaneously with the rolling and compacting of each layer of aggregate.

(I) SAMPLING

1. Aggregates at the Source – See section (B).
2. During Construction -Take at least one (1) random sample during construction within the first 500 tons of placed aggregate material, in accordance with ASTM D 75. Collect each sample by taking three (3) incremental samples at random locations from the placed material to make a composite sample by weight of not less than 75 pounds.
3. Sample Identification -Place each sample in a clean container, securely fastened to prevent loss of material. Tag each sample for identification and with the following information:

Contract No._____
Sample No._____
Date of Sample_____
Sampler_____
Source_____
Intended Use_____

For Testing_____

4. Repeat Sampling **–** Repeat the above sampling when a material source is changed or when unacceptable deficiencies or variations from a specified gradation of materials is found in testing.

(J) ACCEPTANCE TESTING

Contractor is responsible for quality control and the County is responsible for acceptance testing to verify the contractor's quality control process. Assurance testing by an independent third party may be necessary. Testing responsibilities will be performed by the Contractor's testing agency or a County-approved lab at the Contractor's expense. Materials approval testing may be performed by the County of San Diego. Failure to detect defective work or materials early will not prevent rejection if a defect is discovered nor shall it obligate the owner for final acceptance at any time. Submit all Test Reports to the Engineer.

1. Gradation -Test each sample of aggregate base course material for gradation in accordance with ASTM C 136 and with the sampling described in Section (I).
2. Thickness– Measure each 100 square yards of each layer of aggregate base course placement. Make depth measurements by test holes, at least 3 inches in diameter, through the base course. Where base course deficiency is more than ½ inch, correct by scarifying, adding mixture of proper gradation, re-blading, and re-compacting. Where the measured thickness is more than ½ inch thicker than indicated, consider it as the indicated thickness plus ½ inch for determining the average. The average thickness is the average of the depth measurements for the entire area, and shall not under-run the thickness indicated in the Contract Documents without written approval from the Engineer.

(K) PROTECTION

Protection work will be performed by the Contractor at the Contractor's expense.

1. As construction is completed, maintain and protect the aggregate base course, except where a portion of the succeeding course is under construction thereon. Maintenance includes drainage, rolling, shaping, and watering, as necessary, to maintain the course in proper condition. Correct deficiencies in thickness, composition, and construction which develop during the maintenance, to conform to the requirements specified herein. Maintain sufficient moisture by light sprinkling with water at the surface to prevent a dusty condition.

2. Finishing along the edges of the permeable pavement for protection during construction shall be as described in Section (H) until the site is fully stabilized, at which time excess geotextile fabrics and impermeable liners can be cut back to the pavement edges.
3. In addition, runoff onto an aggregate base course shall be minimized until the site is fully stabilized. Diversion ditches or other approved types of erosion and sediment control measures shall be placed at the toe of slopes which are adjacent to permeable pavement and rain garden areas, to prevent sediment

from washing into areas aggregate base course at all times during and after construction. Any sediment accumulation into the aggregate base course shall be removed immediately by cleaning or replacement of the aggregate by the Contractor at no cost to the owner.

(L) MEASURE AND PAYMENT

The unit of measure for Aggregates for Green Streets Facilities will be the cubic yard for each course/type of material. The actual number of cubic yards measured complete in place will be paid for the contract unit price per cubic yard, which payment will include all labor, materials, tools, equipment and incidentals necessary to complete the work as specified herein. Payment will also include all subgrade preparation and testing necessary to achieve the required placement.

GEOSYNTHETICS FOR GREEN STREETS FACILITIES

(A) DESCRIPTION

This work consists of supplying and installing various geosynthetics for use in Green Streets Facilities, including the following:

1. Geotextile, Class 1: a geotextile fabric for use in applications where there is a high risk of damage during construction due to construction equipment or dumped aggregates, including due to its use at the bottom of Green Streets Facilities.
2. Geotextile, Class 2: a geotextile fabric for use in applications where there is little to average risk of damage during construction due to construction equipment or dumped aggregates, including use on the sides of Green Streets Facilities.
3. Geogrid: a geosynthetic with woven bands of synthetic material with large apertures for use in applications where the underlying soils are weak or yielding.

    a) If the following soil conditions are encountered when installing permeable pavement facilities, geogrid in accordance with this provision may be utilized in lieu of removal of soil and replacement with select backfill, as directed by the Green Book Standard Specifications Section 213 “Engineering Geosynthetics” and approved by the County Engineer:

    - unstable or highly erodible soils,
    - weak soils,
    - gap graded soils,
    - alternative sand / silt laminated soils,
    - dispersive clays, and / or rock flour

4. Waterproofing Membrane: Material that is used to prevent infiltration and contain stormwater within the facility by lining the sides and bottom.

Except as herein stated, the requirements specified by Green Book Standard Specifications Section 213 “Engineering Geosynthetics” are applicable to this specification.

(B) MATERIALS

1. Geotextile: Class 1 and Class 2 geotextiles for Green Streets Facilities shall meet the requirements of AASHTO M-288 and Green Book Standard Specifications Section 213-4 “Paving Fabric” as applicable.

    The permeability of the geotextile fabric should also be at least an order of magnitude higher (10x) the soil sub-grade permeability for Green Streets Facilities used as infiltration practices.

2. Geogrid: Shall meet the requirements of AASHTO M-288 and Green Book Standard Specification Section 213-5 Geotextiles and Geogrids”, unless otherwise specified in the contract documents.
3. Waterproofing Membrane: shall have a thickness of 30 mil and conform to the

following requirements.

Table 1: Test Properties for Waterproofing Membrane

	Test Method	**Specifications Limits**
Thickness	D5199	+/-5%
Specific Gravity (min.)	D 792	1.20
100% Modulus (psi, min.) (lb. force/in width, min.)	D 882	1000 30
Tensile (psi, min.) (lb. force/in width, min.)	D 882	2300 73
Elongation at Break (%, min.)	D 882	380
Graves Tear (lb./in., min.) (lb. force/in. width, min.)	D 1004	325 8
Resistance to Soil Burial (% change, max.) (a) Break Strength (b) Elongation (c) Modulus at 100%	G 160	5 20 20
Low Temperature Impact (Pass/F)	D 1790	-20
Dimensional Stability (% change/max.)	D 1204 (212/F/15 min.)	3
Water Extraction (%, Max. Loss)	D 1239	0.15
Volatile Loss (%, max.)	D 1203	0.70
Hydrostatic Resistance (psi, min.)	D 751	100

(C) SUBMITTALS AND TESTING

1. Product Data: Submit most recent printed information from manufacturer for:

   a. Type and Source of Materials

   b. Qualifications of Manufacturer

   - Manufacturer shall have a minimum of five (5) years of experience supplying geotextile materials for stormwater applications.
   - Submit Manufacturer name, address, telephone and fax numbers, and contact name.
   - Submit certification that Manufacturer is able to provide sufficient quantities of materials for the entire project.

   c. Geotextile Material per Green Book Standard Specifications Section 213-5 “Geotextiles and Geogrids”
   - Weight, ounces per square foot
   - Grab Strength, pounds force
   - Puncture Strength, pounds force
   - Trapezoidal Tear Strength, pounds force
   - Permittivity, as a function of permeability, /sec
   - Minimum Apparent Opening Size, millimeters
   - Elongation at Failure, %
   - Ultraviolet stability, % strength retained after 500 hours

d. Geogrid Material per Green Book Standard Specifications Section 213-5 "Geotextiles and Geogrids"
   - Weight, ounces per square foot
   - Strength at 5% Strain, pounds per foot
   - Minimum Opening Size, inches
   - Maximum Opening Size, inches
   - Ultimate Tensile Strength, pounds per foot
   - Junction Strength, pounds force
   - Ultraviolet stability, % strength retained after 500 hours

e. Waterproofing Membrane per Table 1.
   - Thickness, mils
   - Specific Gravity
   - 100% Modulus, psi, pounds force/inch width
   - Tensile Strength, psi, pounds force/inch width
   - Elongation at Break, percent
   - Graves Tear, pounds/in, pounds force/inch width
   - Resistance to Soil Burial, % change
   - Low Temperature Impact, pass/degree Fahrenheit
   - Dimensional Stability, % change
   - Water Extraction, %, maximum loss
   - Volatile Loss, %
   - Hydrostatic Resistance, psi

2. Product Samples: Along with product data, submit representative samples to the County for review and approval. Do not order materials until the County Engineer has approved. Delivered materials shall match the approved samples.
3. Soil Tests: Submit certification that the geotextile has at least an order of magnitude (10x) higher permeability than the soil subgrade permeability as specified in the Contract Documents for infiltration practices.

(D) DELIVERY, STORAGE AND HANDLING

1. Deliver, store and handle packaged materials in strict compliance with all manufacturer's instructions and recommendations. Keep a record of all deliveries along with corresponding package labels.
2. Minimize exposure to ultraviolet (UV) degradation by keeping geotextile materials out of direct sunlight at all times. Protect all materials from weather, damage, injury and theft.
3. Sequence deliveries to avoid delays and UV exposure.

(E) PRE-INSTALLATION EXAMINATION AND PREPARATION

1. Pre-Installation Examination: Prior to beginning work, the Contractor shall examine previous work, related work, and conditions under which this work is to be performed and shall notify the County in writing of all deficiencies and conditions detrimental to the proper completion of this work. This includes:
   a. The subgrade is at incorrect depths, lines, and dimensions for installing the geotextile fabrics.
   b. Overly wet conditions exist or are anticipated to occur during installation, as

they will contaminate the geotextiles.

c. Construction debris is present within the placement area which may damage the geotextiles; work is to be sequenced to avoid construction traffic on the exposed geotextiles at any time.

(F) PLACEMENT

1. The Contractor shall not place any geotextile, geogrid or waterproofing membrane until all work in adjacent areas is complete and approved by the County.
2. Material shall be cut and fit to the dimensions shown on the plans with a minimal amount of seams, and with excess materials removed and disposed of properly. Clean and straight cuts are required to the line and grade of the plans.
3. Geosynthetics shall be placed on the prepared surface of the stormwater practice parallel to the longest side of the practice, and without dragging it across the grade. Wrinkles and folds shall be removed by stretching and pinning.
4. Securing pins or staples for geotextile fabric shall have a minimum length of 10 inches and shall be designed to securely hold the geotextile fabric in place during construction. Waterproofing membrane shall be held in place by backfilling or other means without puncturing the material. Other methods of pinning can also be used as allowed by the County Engineer.
5. Geotextiles shall be overlapped by a minimum of 3 feet at roll edges and ends. Roll edges, ends and overlaps shall be secured a minimum of 5 feet on center or sewed in accordance with Section 213.02 (C).
6. Geotextiles shall be folded or cut and overlapped in the direction of the turn for all curves. Folds, as well as edges, ends, and overlaps shall be pinned a minimum of 5 feet on center or sewed in accordance with Section 213.02 (C).
7. Waterproofing membrane shall be glued continuously at seams in accordance with all manufacturers' recommendations including any required overlap. Folds shall also be secured and pulled taught.

(G)PROTECTION

1. Protect newly placed geosynthetics from damage during construction, and protect them from ultraviolet (UV) degradation at all times.
2. Construction traffic on exposed geosynthetic materials is strictly prohibited.
3. After beginning work, coordinate activities with other work so that there is no disturbance or damage from traffic or other construction activities subsequent to placement.
4. Any damaged geotextile, geogrid, or waterproofing membrane shall be repaired or replaced immediately upon discovery of the damage, to the satisfaction of the Engineer, at the Contractor's expense.

(H) EXCESS MATERIALS

Unused material exposed to ultraviolet (UV) degradation or otherwise damaged shall also be disposed of properly.

(I) MEASURE AND PAYMENT

The unit of measure for geosynthetics will be square yards of the type of geosynthetic specified. The number of square yards will be the actual number of square yards complete in place, which will include furnishing, transporting, handling, installing, and testing the geosynthetics as well as all seams, overlaps, staking, embedment, and protection measures.

UNDERDRAINS FOR STORMWATER FACILITIES

(A) DESCRIPTION

This work shall consist of furnishing and placing the items specified to construct perforated PVC pipe for underdrains, cleanouts, observation wells, field connections to existing storm drain pipe or existing structures, and gate valves and backflow preventers as shown in the Drawings and in accordance with County Standards, where applicable. Except as herein stated, the requirements specified in Green Book Standard Specifications Section 207 “Gravity Pipe” and 306 “Open Trench Conduit Construction” are applicable to this specification.

Related Items: Trench excavation and backfill and non-perforated underdrain pipe will be constructed and installed per the standard specifications and special provisions and paid separately.

(B) REFERENCES

The publications listed below form a part of this specification to the extent referenced. The publications are referred to within the text by the basic designation only.

AASHTO M 105 Gray Iron Castings

ASTM D 2729 Polyvinyl Chloride (PVC) Sewer pipe and Fittings

ASTM D 3034. Type PSM Polyvinyl Chloride (PVC) Sewer Pipe and Fittings

(C) MATERIALS

All materials shall meet the requirements set forth in the Standard Specifications or modified in the Special Provisions.

1. PVC (perforated or non-perforated as specified in the Contract Drawings): Shall be schedule 40 for underdrains and pipe risers, and shall conform to Green Book Standard Specification Section 207-17 “PVC Gravity Pipe”.
2. HDPE for underdrain pipe along curves, as indicated in the Contract Drawings.
3. Frame and Cover: Shall conform to Green Book Standard Specifications Section 206-3.3 “Manufacturing and Finishing”, 301-1.6 “Adjustment of Manhole Frame and Cover Sets to Grade”, and 302-5.8 “Manholes and Other Structure” or approved equal.
4. Screw Cap: Shall be threaded PVC with 2-inch square lug.
5. Concrete Encasement: Concrete encasement shall have a minimum compressive strength of 3000 psi and shall conform to Green Book Standard Specifications Section 201 “Concrete, Mortar and Related Materials”.
6. Fittings: Fittings shall be PVC and used as indicated on the design drawings.
7. Cleanout: The cleanout cover assembly in pavement shall be cast iron and have an adjustable housing with a scoriated cast iron cover as indicated in the design drawings and as referenced in Green Book Standard Specifications Section 206-3.3 “Manufacturing and Finishing”.
8. Observation Well: 2-inch well test plug using EnviroTech ErgoGrip or approved equal with tethering eyelet.

9. Field Connections: All materials shall meet the requirements set forth in Green Book Standard Specifications 208 “Pipe Joint Types and Materials”, or modified in the Special Provisions.
10. Backflow Valve – Shall be a backflow flapper valve (6-inch), Flex PVC ™ Item No. S675P or approved equal.
11. Gate Valve: Shall be manual slide valve, PVC plastic body and hubs with 304 stainless steel shaft and paddle (4-inch or 6-inch) and die cast aluminum handle, Valterra or approved equal.

(D) CONSTRUCTION REQUIREMENTS

1. Underdrain Pipes: Perforated pipes shall be placed with perforations down. Pipe shall be placed with the bell end up grade. Pipe sections shall be joined with appropriate couplings. The ends of underdrain pipe shall be plugged up grade as directed by the Engineer.

2. Risers for Cleanouts/Observation Wells

   a. Observation Well: Provide 2-inch PVC slotted well casing, with well point, extending twelve-inches into subgrade. Set casing approximately 2-inches below finished pavement elevation to allow clearance for test plug and cleanout cap. Provide 4-inch diameter PVC outer casing extending through permeable concrete into subbase and install 4-inch flush mounted cast iron cleanout with brass cap solvent welded to outer casing. Provide 2-inch well test plug with tethering eyelet.

   b. In paved areas: Provide frame and cover over cleanout and observation well riser pipes as indicated in the Drawings. For locations in permeable pavement, frames and covers shall be located within the permeable pavement area surrounded by PCC edge curb. Cleanouts and Observation Wells shall be encased in concrete as shown in the Drawings. Connect riser to underdrain piping.

   c. In non-paved areas: Provide screw cap covers. Covers shall be set 6-inches above final grade. Connect riser to underdrain pipe.

3. Field Connection at Existing Structure construction shall be shown on the contract Drawings.

4. Backflow preventer assembly to be located per the plans and as directed by the Engineer at a location upstream of proposed storm drain field connection yet downstream of perforated underdrain pipe. Provide PVC riser pipe to protect PVC access sleeve pipe. Connect assembly to underdrain piping, using the appropriate reducer and tee fittings.

5. Gate valve to be located per the plans and as directed by the Engineer within an accessible catch basin or overflow riser and upstream of proposed storm drain field connection yet downstream of perforated underdrain pipe. The incoming non-perforated PVC pipe shall extend into the catch basin or overflow riser a sufficient distance to allow for connection of the valve as well as sufficient operation of the valve handle but not more than a distance of 8 inches. Valves may also be placed within valve boxes as per plans and specifications and as directed by the Engineer. Catch basins, overflow risers and/or valve boxes must

have sufficient depth to allow for the height of the valve when in its fully open position plus at least 3 inches at the top.

(E) TESTING AND ACCEPTANCE

When construction is complete, the contractor shall test all completed underdrain systems for continuous, unimpeded flow.

a. Suggested test methods for each pipe run are as follows:

i. At highpoint or upstream end of underdrain pipe, open cleanout and insert hose from water source.

ii. Turn on water

iii. Acceptance of pipe run consists of free flow of water through drain outlet into the existing storm drain structure.

b. Any sections of the underdrain that are clogged or crushed shall be repaired at the contractor's expense.

(F) MEASURE AND PAYMENT

a. UNDERDRAIN PIPE

Payment for Underdrain Pipe will include all costs for furnishing all materials, labor, tools, equipment and incidentals (including pipe risers, caps, and fittings) to complete the work. The unit of measurement will be linear feet.

b. CLEANOUTS/OBSERVATION WELLS

The unit of measure for Underdrain Cleanout and Observation Well will be each. Payment for Underdrain Cleanout or Underdrain Observation Well will be made at the Contract unit price per each which will include excavation, shoring, backfill, compaction, installation of cleanout including wye and jointing, pipe riser, gaskets, frame and cover or screw cap, concrete encasement, and all labor, materials, tools, equipment and incidentals needed to complete work specified.

c. FIELD CONNECTION Field connection at existing structure will be measured and paid for at the contract unit price per each and will include furnishing, installing, excavation, backfill, and all labor, materials, tools, equipment, and incidentals necessary to complete the work.

The unit of measure for field connection at storm drain will be each. Payment will be made at the Contract unit price per each, which payment will include, but not limited to, furnishing and installing wye branch connections, straight thimbles, maintaining storm drain service, and all labor, materials, tools, equipment and incidentals needed to complete work specified.

d. BACKFLOW PREVENTER

The unit of measure for Backflow Preventers will be each. Payment for Backflow Preventers will be made at the Contract unit price per each which will include excavation, shoring, backfill, compaction, installation of pipe riser, connections, gaskets,

backflow preventer (flapper valve), frame and cover or screw cap, concrete encasement, and all labor, materials, tools, equipment and incidentals needed to complete work specified.

e. GATE VALVE

The unit of measure for Gate Valves will be each. Payment for Gate Valves will be made at the Contract unit price per each which will include connections, gate valve (slide valve), and all labor, materials, tools, equipment and incidentals needed to complete work specified.

PERMEABLE CONCRETE PAVEMENT

(A) DESCRIPTION

This work shall consist of constructing permeable Portland cement concrete roadway pavements, alleys, sidewalks, or trails on a prepared sub-grade in accordance with these specifications and in conformity with the lines, grades, thicknesses and typical sections shown in the contract documents or as directed by the Engineer.

The permeable concrete pavements and sidewalks shall consist of a mixture of Portland cement, aggregate, water, admixtures and other ingredients as specified in Green Book Section 201-1.1.6 “Pervious Concrete”. Except as herein stated, the requirements specified for Green Book Standard Specifications Section 201 Concrete, Mortar and Relative Materials” and Section 303 Concrete and Masonry Construction” are applicable to this specification.

(B) REFERENCES

ACI 522R-10 Report on Pervious Concrete

ACI 522.1-08 Specifications for Pervious Concrete Pavement

ACI 211.3R - Guide for Selecting Proportions for No-Slump Concrete

ASTM C42 -Standard Test Method for Obtaining and Testing Drilled Cores and Sawed Beams of Concrete ASTM C94 -Standard Specification for Ready-Mixed Concrete

ASTM C150 – Standard Specification for Portland Cement

ASTM C595 -Standard Specification for Blended Hydraulic Cements

ASTM C979 – Standard Specification for Pigments for Integrally Colored Concrete

ASTM C1077 -Standard Practice for Agencies Testing Concrete and Concrete Aggregates for Use in Construction

ASTM C1116 – Standard Specification for Fiber Reinforced Concrete

ASTM C1688 -Standard Test Method for Density and Void Content of Freshly Mixed Pervious Concrete

ASTM C1701 -Standard Test Method for Infiltration Rate of In Place Pervious Concrete

ASTM C1754 -Standard Test Method for Density and Void Content of Hardened Pervious

Concrete

ASTM D994 -Standard Specification for Preformed Expansion Joint Filler for Concrete

ASTM D1751 -Standard Specification for Preformed Expansion Joint Filler for Concrete Paving and Structural Construction

ASTM D1752 -Standard Specification for Preformed Sponge Rubber Cork and Recycled PVC Expansion Joint Fillers for Concrete Paving and Structural Construction

NRMCA – National Ready Mix Concrete Association

(C) MATERIALS

1. Portland Cement shall be:
   a. Type I or II conforming to AASHTO M85 or ASTM C150; or
   b. Type IP or IS conforming to ASTM C595.
2. Aggregate
3. Maximum coarse aggregate size shall be No. 8.
4. Coarse and fine aggregate conforming to Standard Specifications shall be double-washed. Washing shall be sufficient to remove dust and other coatings.
5. Admixtures – Water reducing, hydration stabilizers, air entrainment, and other admixtures conforming to Green Book Standard Specifications Section 201-1.2.4 “Chemical Admixtures” shall be allowed in the mix design.
6. Fibers – Reinforcing fibers conforming to Greenbook Standard Specification Section 201-2.3 and ASTM C1116 shall be allowed in the mix design.
7. Pigments – Pigments conforming to ASTM C979 shall be allowed in the mix design.
8. Joint Material – Filler for expansion joints shall be in accordance with Green Book Standard Specifications Section 201-3 “Expansion Joint Filler and Joint Sealants”.

(D) PROPORTIONING

Comply with ASTM C94 and develop a concrete mix design meeting the following requirements in accordance with ACI 211.3R, Appendix 6:

1. Concrete shall achieve a minimum infiltration rate of 60 inches/hour (30 gallons/hour in a 12 inch diameter cylinder). Testing shall be in accordance with ASTM 1701.
2. Concrete shall meet a minimum compressive strength when specified in the Contract Documents.
3. A combined coarse and fine aggregates gradation shall be provided and material passing the #4 sieve shall be between 4% and 7%.
4. <u>Mix Water</u>: Mix water quantity shall be such that the cement paste displays a wet metallic sheen without causing the paste to flow from the aggregate. Mix water yielding a cement paste with a dull-dry appearance has insufficient water for hydration. Insufficient water results in inconsistency in the mix and poor bond

strength between aggregate particles. High water content results in the paste reducing or eliminating the void system required for porosity.

(E) SUBMITTALS

1. **Contractor Qualifications**

   a. At the time of bid submission, Contractor shall submit the name and qualifications of the permeable concrete installer, providing written evidence of the following:

      (i) Employment of one (1) NRMCA certified Pervious Concrete Craftsman who shall be on site, overseeing each placement crew, during all concrete placement; or

      (ii) Employment of at least two (2) NRMCA certified Pervious Concrete Installers who shall be on site, overseeing each placement crew, during all concrete placement.

   b. Not later than fourteen (14) days before construction of permeable concrete, Contractor shall furnish evidence of employment of at least three (3) certified Pervious Concrete Technicians who will perform the pervious concrete construction.

2. **Testing Agency** – Within seven (7) days after notice to proceed, Contractor shall furnish the name and location of the proposed testing agency meeting the requirements of Section O of this specification.
3. **Concrete Producer Qualifications** – Within seven (7) working days after notice to proceed, Contractor shall furnish the name and location of an NRMCA certified plant that will produce and provide permeable concrete.
4. **Concrete Mix Design** – Not later than thirty-five (35) days before construction of permeable concrete, Contractor shall furnish:

   a. A proposed mix design with proportions of materials for acceptance as described in section D of this specification or otherwise specified in Contract Documents. The data shall include unit weight, void ratio, and strength.

   b. Samples of individual concrete materials contained in the mix design for sampling and testing of material prior to use, in accordance with the Green Book Standard Specifications Section 4 “Control of Materials”.

5. **Product Sample (Test Panel)** – At least fifteen (15) working days before construction of permeable concrete, and following the Chief Engineer’s acceptance of the mix design, Contractor shall provide a sample of the product (test panel) in accordance with section F of this specification.

(F) TEST PANEL

1. Contractor shall provide a minimum of one (1) test panel for acceptance. Place, joint and cure the test panel, a minimum of 275 square feet in size or as specified in the Contract Documents, at the required project thickness to demonstrate that in-place void contents, unit weights, and infiltration rates can be met and to demonstrate

effective jointing that does not compromise the cured concrete integrity.

2. **Test Panel Infiltration:** Test panels shall be tested for infiltration in accordance with ASTM C1701.

3. **Test Panel Cores:** Test panels shall have three (3) cores, each six (6) inches in diameter, taken from the panel a minimum of seven (7) days after placement of the permeable concrete. At least one core shall be taken within six (6) inches of a contraction joint. The cores shall be measured for thickness, void structure, and unit weight. Untrimmed, hardened core samples shall be used to determine thickness in accordance with ASTM C42. After thickness determination, the cores shall be trimmed and measured for unit weight in a saturated condition and void content in accordance with ASTM C1754.

4. **Test Panel Acceptance**: Satisfactory test panels will be determined by:

   a. Infiltration rate of at least 60 inches per hour.
   b. Compacted thickness within 1/4" of the specified thickness.
   c. Void Content ± three (3) percent of the design void content.
   d. Unit weight ± five (5) pounds per cubic foot of the design unit weight.

   If test panels meet the above mentioned requirements, they can be left in-place and included in the completed work. If test panels do not meet the above mentioned requirements, they shall be removed and disposed of in an approved manner, and replaced with an acceptable test panel at the contractor's expense.

(G) PREPARATION OF GRADE

1. Sub-Grade Preparation – Shall be in accordance with Specification "Aggregates for Green Streets Facilities".
2. Base Materials – Shall be in accordance with Specification "Aggregates for Green Streets Facilities".

(H) HANDLING, MEASURING AND BATCHING MATERIALS

Permeable concrete shall be transported from batching plant to the location of placement by a rolling drum mixer truck with current (within 12 months) certification by the NRMCA. Non-agitating trucks shall not be used. Each truck should not haul more than two (2) loads before being cycled to another type of concrete, unless a stabilizing hydration agent is used in the permeable concrete mix design or if the County determines that there is no significant concrete buildup in the concrete mixer after delivery of each load.

(I) MIXING CONCRETE

1. Concrete shall be mixed for a minimum of one (1) minute after introduction of all materials into the mixer. Truck mixers shall be operated at the speed designated by the concrete producer for at least 75 to 100 revolutions of the drum.
2. Concrete mixing shall comply with ASTM C94 except that discharge shall be

completed within sixty (60) minutes after the introduction of mix water to the cement. This time can be increased to ninety (90) minutes when utilizing a hydration stabilizer. Further water addition is permitted at the point of discharge provided the design water/cement ratio is not exceeded.

(J) LIMITATIONS ON MIXING AND PLACING

Do not install permeable concrete when ambient temperature is below 40°F or above 90°F, or when ambient temperature is forecasted to be below 40°F or above 90°F at any time during the seven (7) days following placement, unless otherwise permitted in writing by the Engineer.

(K) PLACING AND CONSOLIDATING CONCRETE

1. Pre-Placement Conference -A mandatory pre-placement conference will take place at least seven (7) days prior to installation of work and shall include at a minimum engineer, inspector, general contractor, permeable concrete contractor, concrete supplier, and field testing agency.
2. Wet the base materials or sub-grade immediately prior to concrete placement.
3. Deposit concrete directly from the transporting equipment onto the base materials or sub-grade, as appropriate.
4. Discharge: Each truckload shall be visually inspected for moisture consistency prior to discharge. Water addition shall not be permitted at the point of discharge to obtain the required mixture consistency and truckloads lacking the required moisture consistency shall be rejected as determined by the inspector. Discharge shall be a continuous operation and shall be completed as quickly as possible. Concrete shall be deposited as close to its final position as practical and such that discharged concrete is incorporated into previously placed and plastic concrete. If consolidation occurs during concrete discharge, placement shall be halted, the mixture shall be addressed, and the consolidated portion removed and replaced immediately.
5. Other methods of discharging the concrete may be used when specified in the Contract Documents or as allowed by the County Engineer.
6. Spread the concrete using a come-along, short-handle square ended shovel or rake, or similar equipment.
7. Rolling compaction shall be achieved using a motorized or hydraulically actuated, rotating, weighted tube screed that spans the width of the section placed and exerts a minimum vertical pressure of 10 psi on the concrete. Alternatively a steel pipe roller meeting the same criteria may be used.
8. Plate compaction is not recommended, but may be necessary in small areas. When necessary, a standard soil plate compactor with a base area of at least two square feet that exerts a minimum pressure of 10 psi on the concrete through a ¾ inch minimum plywood cover shall be used.
9. Cross rolling shall be performed using a roller specifically designed to smooth and compact permeable concrete. Lawn rollers are not allowed.
10. Foot-traffic shall not be allowed on fresh concrete.

(L) STRIKE-OFF, CONSOLIDATION AND FINISHING

1. Strike off concrete between forms using a form riding paving machine, vibrating screed, or roller screed.
2. Do not use steel trowels or power finishing equipment.
3. Final surface texture shall be achieved by finishing the fresh concrete using a full-width steel roller that provides a minimum compactive pressure to achieve the required tolerances.
4. Hand tools shall be used to finish the concrete along the slab edges immediately adjacent to forms.
5. Other methods of producing final surface texture may be permitted when specified in the Contract Documents or approved by the engineer.

(M) CURING

1. Begin curing within twenty (20) minutes of concrete discharge unless longer working time is approved by the County Engineer.
2. **Curing Material**:
   a. The pavement surface shall be entirely covered with a minimum six (6) mil thick polyethylene sheet in accordance with-Green Book Standard Specifications Section 201-4.2 “Sheet Curing Materials”. Sheeting shall remain covered for at least seven (7) uninterrupted days.
   b. Alternate curing materials may be used as approved by the Engineer.
3. Curing sheets shall be secured and kept secure at all times without using dirt.
4. **Hot Weather Curing:** A fog shall be sprayed above the surface, before covering, when required due to hot weather conditions Equipment must include fog nozzles that atomize water using air pressure to create a fog blanket over the slab.
5. **Cold Weather Curing:** Curing shall be in accordance with ACI 306R-10 “Guide to Cold Weather Concreting”.

(N) JOINTS

1. Contraction joints shall be installed at locations and spacing shown in the Contract Documents at one-quarter (¼) the depth of the thickness or a maximum of one and a half (1½) inches for roadway and alley pavements, and at one-half inch (½”) for sidewalks and trails. Allowable methods for joint placement, as directed by the County Engineer, include:
   a. **Rolled Joints** -shall be formed in plastic concrete using a steel pipe roller to which a beveled fin with the required diameter to achieve the joint depth has been attached around the circumference of the roller. Rolled joints are formed immediately after roller compaction and before curing. Sidewalks and trails shall have rolled joints.
   b. **Sawed joints** -shall be constructed as soon as the permeable pavement can be sawed without raveling the sawed edge and before initial cracking occurs, using a wet saw or an early-entry saw. Sawed joints shall typically be constructed between 24 hours and 48 hours after concrete placement, depending on site

conditions. At no time during the sawing process shall more pavement surface be exposed than that needed for sawing. Any dust or slurry generated during sawing shall be immediately removed during the sawing operation.

2 Construction joints shall be installed at locations and spacing shown in the Contract Documents and whenever concrete placement is suspended for a sufficient length of time that concrete may begin to harden.

3 Expansion joints shall be installed when permeable concrete will abut existing concrete slabs or other structures such as walls, footings, columns, catch basins, stairs, light poles, and other points of restraint.

4 To reduce raveling at joints, or where permeable concrete meets impermeable pavement, finishing may be necessary in accordance with Section L, Item 4 of this specification.

(O) TESTING

Contractor is responsible for quality control and the County is responsible for acceptance testing to verify the contractor's quality control process. Assurance testing by an independent third party may be necessary. Testing responsibilities will be performed by the testing agency at the Contractor’s expense. Concrete materials and operations may also be tested and inspected by the owner as work progresses. Use of testing services will not relieve Contractor of the responsibility to furnish materials and construction in full compliance with the Contract Documents. Failure to detect defective work or materials early will not prevent rejection if a defect is discovered later nor shall it obligate the Engineer for final acceptance at any time.

1. **Testing Agency:** Agencies that perform testing services on concrete shall be AASHTO accredited per AASHTO R18 and meet the requirements of ASTM C1077. Testing agencies performing the testing shall also have experience in testing permeable concrete and shall be accepted by the Engineer before performing any work. Field tests of concrete shall be made by an individual certified as an NRMCA Certified Pervious Concrete Technician, who is also an ACI Concrete Field Testing Technician, Grade 1 in accordance with ACI CPI.
2. **Testing Procedure:**

   a. Conduct tests in accordance with ASTM C1688 at the beginning of each permeable concrete placement operation for each batch, or for every 50 cubic yards (maximum), or a minimum of one test for each day’s placement, to verify fresh density and void content.

   b. A minimum of seven (7) days following each placement, three (3) cores, six (6) inches in diameter, shall be taken. The cores shall be measured for thickness, void content and unit weight determined using the methods described in section F of this specification Test Panels. Satisfactory test panels will be determined by:

      i. Compacted thickness +3/4”, -1/4” of the specified thickness.

      ii. Void Content ± three (3) percent of the design void content.

      iii. Unit weight ± five (5) pounds per cubic foot of the design unit weight.

   c. If permeable concrete fails to meet the above requirements, the County Engineer shall make a determination of acceptance, rejection, or acceptance at a reduced

price, unless otherwise specified in the special provisions

3. The infiltration of the pavement surface shall be tested in accordance with ASTM C1701. All applied water shall infiltrate directly without puddle formation or surface runoff, and the testing shall be observed by the County. A minimum infiltration rate of 60 inches per hour shall be achieved.
4. Submit all test results to the Engineer.
5. Cores holes shall be filled with standard concrete.

(P) OPENING TO TRAFFIC

Both vehicular traffic and pedestrian traffic shall be excluded from permeable concrete pavement after the placement of curing materials as follows:

- 7 days for pedestrian traffic on sidewalks or pavements
- As determined by County Engineer for vehicular traffic on roadways, but not less than 14 days.

(Q) TOLERANCES

Pavement must be mechanically swept and finished before testing for compliance with tolerances. Construct pavement to comply with the following tolerances:

- Thicknesses: + 3/4 inch; -1/4 inch; refer to Standard Specification for disposition on pavement with average thickness which is less than the thickness by more than 1/8 inch.
- Elevation: + or - 1/2 inch
- Contraction joint depth: +1/4 inch, -0 inch

(R) MEASURE AND PAYMENT

The unit of measure for Permeable Concrete Pavement will be the square yard at the specified thickness. The actual number of square yards, complete in place measured along the surface, will be paid for at the contract unit price per square yard, or adjusted unit price per square yard if required under Green Book Standard Specifications Section 9 “Measurement and Payment”, which payment will be full compensation for furnishing, hauling, and placing all materials, including formwork, concrete work, joints, expansion joint materials, waterproofing, load transfer devices, impermeable material, sealing of joints and curing. Payment for will include all costs for furnishing all materials, labor, tools, equipment and incidentals to complete the work.

PERMEABLE ASPHALT PAVEMENT

(A) DESCRIPTION

This work shall consist of constructing a permeable asphalt pavement on a prepared sub-grade in accordance with these specifications and in conformity with the lines, grades, thicknesses and typical sections shown in the contract documents or as directed by the Engineer.

The permeable asphalt pavement shall consist of a mixture of aggregates, bituminous binder material including polymer modified asphalt, fibers, mineral filler, anti-strip additives, and other optional additives as specified under Green Book Standard Specifications Sections 203-15 “Porous Asphalt Concrete“ and 302-13 “Porous Asphalt Concrete Pavement” .

(B) REFERENCES

AASHTO T96 -Standard Method of Test for Resistance to Degradation of Small-Size Coarse Aggregate by Abrasion and Impact

AASHTO T209 -Theoretical Maximum Specific Gravity and Density of Bituminous Paving Mixtures

AASHTO T275 -Standard Method of Test for Bulk Specific Gravity of Compacted Bituminous Mixtures Using Paraffin-Coated Specimens

AASHTO T283 -Standard Method of Test for Resistance of Compacted Asphalt Mixtures to Moisture-Induced Damage

ASTM D3203 -Standard Test Method for Percent Air Voids in Compacted Dense and Open Bituminous Paving Mixtures

ASTM D4791 -Standard Test Method for Flat Particles, Elongated Particles, or Flat and Elongated Particles in Coarse Aggregate

ASTM D5821 -Standard Test Method for Determining the Percentage of Fractured Particles in Coarse Aggregate

ASTM D6390 -Standard Test Method for Determination of Draindown Characteristics in Uncompacted Asphalt Mixtures

ASTM D6752 -Standard Test Method for Bulk Specific Gravity and Density of Compacted Bituminous Mixtures Using Automatic Vacuum Sealing Method

NAPA IS-115 -Open-Graded Asphalt Friction Courses, Design, Construction & Maintenance

NAPA IS-131 - Porous Asphalt Pavements for Stormwater Management NAPA – National

Asphalt Pavement Association

(C) MATERIALS

The materials for permeable asphalt pavement shall meet the requirements of Greenbook Standard Specification Section 203-15 and the following:

1. Performance graded asphalt binder (PGAB) for base and surface course shall meet the requirements of Green Book Standard Specifications Section 203-15.2 “Materials”.
2. Coarse aggregate shall confirm to Green Book Standard Specifications Section 203-15.2.2 “Aggregate”.

3. Additives such as cellulose or mineral filler, or anti-strip additives, shall be included when stipulated in the Contract Documents or as allowed by the Engineer.

(D) COMPOSITION OF THE MIXTURES

The Contractor shall develop for approval a job mix formula (JMF) for proportioning of each type of permeable asphalt pavement proposed for use as specified in the Contract Documents (surface, leveling, base, or other) in accordance with Green Book Standard Specifications Sections 203-15.3 “Composition and Grading” .

(E) SUBMITTALS

1. **Contractor Qualifications -**At the time of bid submission, Contractor shall submit the name and qualifications of the permeable asphalt installer, providing written evidence of project experience and proficiency in successfully completing permeable asphalt pavement construction including a minimum of three (3) completed projects, total square footage to exceed the project quantities with owner information, addresses of each project, and the following:

   (i) Job mix designs used;

   (ii) In-Situ pavement test results; and

2. **Testing Agency** – Within 7 days of notice to proceed, Contractor shall furnish the name and location of a third-party QA Inspection Agency with experience in testing permeable asphalt, who will oversee and document mix production. Use of testing services will not relieve the contractor of the responsibility to furnish materials and construction in full compliance with the Contract.

3. **Producer Qualifications** – Within seven (7) days after notice to proceed, the Contractor shall furnish the name and location of an asphalt plant that is an authorized material source as defined by the Department’s *Certification Program for Suppliers of Asphalt* and will produce and provide permeable asphalt.

   a. Job Mix Designs – At least thirty (30) working days before construction, Contractor shall furnish job mix designs for the permeable asphalt, which shall include at a minimum all mix design described in this specification.

   b. Material Sources: Submit a list of materials proposed for work under this Section including the name and address of all material sources and all bituminous mixing plants.

c. Certificates: Submit certificates, signed by the material sources and the relevant subcontractors, stating that the materials meet or exceed the specified requirements.

d. Samples: Submit samples of all materials and all current test results of the mix for review and approval by the Engineer and test results to a County-approved lab.

4. Test Results – Testing agency shall provide pavement test result:

a. Air void content shall be calculated using California Test 309 (Compact specimen and determine bulk specific gravity in accordance with CT 308 Method B (See Green Book Standard Specifications Section 203-15.3 “Composition and Grading”).

b. Test results per Table 1

Table 1 – Certification Requirements

Material*	**Properties to be reported on Certificate****
binder PGAB	Certification
coarse aggregate	gradation, wear, fracture faces (fractured and elongated)
fine aggregate	Gradation
Silicone, when applicable	manufacturer's certification
Fibers, when applicable	manufacturer's certification
Mineral filler, when applicable	manufacturer's certification

* Samples of each material shall be submitted to the Engineer. Samples must be in sufficient quantity to perform tests for each material per Green Book Standard Specifications Section 4 “Control of Materials”.

** At a minimum; more material properties may be required per Contract Documents.

(F) WEATHER AND SEASONAL RESTRICTIONS

Comply with the following:

1. The ambient air temperature during the past 24 hours shall be above 50°F
2. The asphalt laying temperature should be within 10°F of the compactive temperature in the approved job mix design.

(G) HAULING OF ASPHALTIC MATERIALS

1. The asphalt shall be transported in clean vehicles with tight, smooth dump beds that have been sprayed with a non-petroleum release agent or soap solution to prevent the mixture from adhering to the dump beds. Mineral filler, fine aggregate, slag dust, and similar materials shall not be used to dust truck beds.
2. The open graded mix shall be covered during transport to protect the mix from weather and to minimize mix cooling and prevent lumps. Long hauls, particularly those in excess of 25 miles may result in separation of the mix and its rejection, and are not recommended.

(H) PREPARATION OF GRADE

1. **Sub-Grade Preparation** – Shall be in accordance with the specification “Aggregates for Green Streets Facilities”.
2. **Base Materials –** Shall be in accordance with the specification “Aggregates for Green Streets Facilities”.

(I) SPREADING AND FINISHING

1. **Pre-Placement Conference** -A mandatory pre-placement conference will take place at least seven (7) days prior to installation of work and shall include at a minimum engineer, inspector, superintendent, asphalt installer, and QA inspector.
2. Contact surfaces such as curbing, gutters, and manholes shall be painted with a thin, uniform coat of Type RS-1 emulsified asphalt immediately before the asphalt mixture is placed against them.
3. Place the asphalt using self-propelled paving equipment with an activated screed or strike-off assembly capable of being heated if necessary, and capable of spreading and finishing the mixture without segregation. Track pavers are recommended.
4. The use of water to cool the pavement is prohibited.
5. Place lifts no more than 24 hours after each previous lift to minimize the use of tack coats. Tack coats will only be allowed if required by the Contract Documents or approved by the Engineer.
6. The finished surface shall be of a uniform texture and evenness, and shall not show any indication of tearing, shoving, or pulling of the pavement during placement.

(J) COMPACTION OF PERMEABLE ASPHALT

1. Roll the asphalt using a two-axle tandem roller when it is cool enough to withstand the roller without displacement of the asphalt, and using rollers sufficient to compact the asphalt without crushing the aggregate or compromising the required void content and infiltration rates.
2. The number, mass (weight), and type of rollers furnished shall be sufficient to obtain the required compaction while the mixture is in a workable condition. Generally one breakdown roller will be needed for each paver used in the spreading operation.

   a) Breakdown rolling shall occur when the mix temperature is between 275 and 325°F.

   b) Intermediate rolling shall occur when the mix temperature is between 200 and 275°F.

   c) Finish rolling shall occur when the mix temperature is between 150 and 200°F.
3. Unless otherwise specified, the longitudinal joints shall be rolled first. Next, the Contractor shall begin rolling at the low side of the pavement and shall proceed toward the center or high side with lapped rolling parallel to the centerline.
4. Roll until all roller marks are gone however avoid excessive rolling which could reduce the infiltration capabilities of the asphalt.
5. To prevent adhesion of the mixture to the rolls, rolls shall be kept moist with clean water or water mixed with very small quantities of detergent or other approved

materials. Excess liquid will not be permitted.

6. Along forms, curbs, headers, walls, and other places not accessible to the rollers, the mixture shall be thoroughly compacted with hot or lightly oiled hand tampers, smoothing irons or with mechanical tampers. On depressed areas, either a trench roller or cleated compression strips may be used under the roller to transmit compression to the depressed area.
7. Rollers will not be stopped or parked on the freshly placed mixture; Foot-traffic shall not be allowed on fresh asphalt for at least 24-hours.
8. Any mixture that becomes loose and broken, mixed with dirt, or is in any way defective shall be removed and replaced with fresh hot mixture. The mixture shall be compacted to conform to the surrounding area with segregation. Any area showing deficiencies shall be replaced at the Contractor's expense.

(K) JOINTS

1. Joints between old and new pavements or between successive days work shall be made to ensure a thorough and continuous bond between the old and new mixtures. Whenever the spreading process is interrupted long enough for the mixture to attain its initial stability, the paver shall be removed from the mat and a joint constructed.
2. Butt joints shall be formed by cutting the pavement in a vertical plane at right angles to the centerline, at locations approved by the Engineer. The Engineer will determine locations by using a straightedge at least 16 feet long. The butt joint shall be thoroughly coated with Type RS-1 emulsified asphalt just prior to depositing the pavement mixture when paving resumes.
3. Tapered joints shall not be allowed. Longitudinal joints that have become cold shall be coated with Type RS-1 emulsified asphalt before the adjacent mat is placed. If directed by the Engineer, joints shall be cut back to a clean vertical edge prior to applying the Type RS-1 emulsified asphalt.

(L) PAVEMENT SAMPLES

The Contractor shall cut 4” minimum diameter core samples for air voids and thickness plus box samples from the compacted pavement for testing within 24 hours of placement. Samples of the mixture shall be taken for the full depth of the pavement every 200 tons of placement or 1 sample per day, whichever is greater, or as directed by the Engineer.

(M) TESTING

1. **Quality Assurance (QA) Inspector**
   a. The Contractor shall provide at the Contractors’ sole expense and the Engineer’s approval a third-party QA Inspector to oversee and document mix production. All mix testing results during production shall be submitted to the QA Inspector.
   b. The QC plan may be altered at the discretion of the Engineer and based on written recommendations from the QA Inspector.
   c. For small batch production, the Engineer may also modify or eliminate some testing requirements in the QC plan.

2. **During Production**
   a. The Contractor shall sample, test and evaluate the mix in accordance with the methods and minimum frequencies in the Table 2. Test results shall be delivered to the Engineer.

Table 2: QC/QA testing requirements during production

Test	Minimum Frequency	Test Method
Temperature in Trucks Prior to leaving Plant	Six times per day	-
Gradation	Greater of either (a) 1 per 500 tons, (b) 2 per day, or (c) 3 per job	AASHTO T30
Binder Content	Greater of either (a) 1 per 500 tons, (b) 2 per day, or (c) 3 per job	AASHTO T164
Air Void Content	Greater of either (a) 1 per 500 tons, (b) 2 per day, or (c) 3 per job	ASTM D6752

   b. Testing of the temperature, binder content, and air void content shall be within the limits set by this specification.
   c. Testing of the gradation shall not vary from the approved design mix by more than the tolerances in Table 3.

Table 3: QC/QA testing tolerances during production

Sieve Size	Percent Passing
0.75	--
0.50	+ 6.0
0.375	+ 6.0
No. 4	+ 5.0
No. 8	+ 4.0
No. 200	+ 2.0
% PGAB	+ 0.4, -0.2

d. Should the asphalt fail to meet all testing requirements initially, production modifications shall be made until the permeable asphalt mix is within required tolerances. After the corrective action has been taken the resulting mix will be sampled and tested again at the Contractor's expense.

e. If the re-sampled asphalt fails to meet all testing requirements again, the Engineer will be immediately informed and provided with the test results. The Engineer may determine that it is in the best interest of project that production is ceased at that time. The Contractor will be responsible for all costs associated with the inability of the asphalt plant to meet all testing requirements.

3. **Following Placement**

a. The full permeability of the pavement surface shall be tested prior to final acceptance in accordance with ASTM D6390.

b. Test in-place base and surface course for compliance with requirements for thickness, void content and unit weight as described above by using 1' x 1' slab samples. Repair or remove and replace unacceptable work as directed by the Engineer at the Contractor's cost.

c. Surface Smoothness: Test finished surface for smoothness using a 10 foot straightedge applied parallel with and at right angles to the centerline of the paved area. Surface will not be accepted if gaps or ridges exceed 3/16 of an inch. The smoothness requirements specified herein apply only to the top lift of each layer, when asphalt is constructed in more than one lift.

d. QC/QA requirements during paving are summarized in Table 4.

Table 4. QC/QA requirements during paving

Activity Schedule	Frequency	Tolerance
Inspect truck beds for pooling (draindown)	every truck	NA
Take surface temp. behind joint heater	each pull	6°C (10°F) of compaction temp
Test surface smoothness & positive drainage with a 10 ft straight edge	After compaction	4.5 mm (3/16")
Hose test with at least 5 gpm water	after compaction	immediate infiltration, no ponding

(N) PROTECTION OF ASPHALTIC PAVEMENT

Minimum times prior to opening pavement to traffic are as follows:

- After pavement has been permitted to cool to below 100 °F for all traffic, and;
- 24 hours for pedestrian traffic, and;
- 48 hours for vehicular traffic.

The Contractor shall protect the permeable asphalt from severe weather conditions and contamination by dust, dirt, mud or other fine grained material or sediment. The asphalt shall be protected by an approved method from the time of placement until final acceptance of the project. Any damage to the permeable asphalt caused by the contractor's equipment shall be repaired by the contractor at no cost to the owner. Any portion of the permeable asphalt that becomes contaminated to the extent that drainage is reduced or inhibited shall be removed and replaced at no expense to the owner.

(O) MEASURE AND PAYMENT

The unit of measure for Permeable Asphalt Pavement will be tons. The number of tons will be the actual number of tons complete in place, as weighed on approved truck scales. The County Engineer will deduct the weight of all material lost, wasted, damaged, rejected or applied in excess of the Engineer's direction or contrary to these specifications. The number of tons of Permeable Asphalt Pavement type specified, as measured, will be paid at the contract unit price per ton, which payment will be full compensation for furnishing, hauling, and placing all materials and for furnishing all equipment, tools, labor and incidentals necessary to complete the work as specified herein.

PERMEABLE INTERLOCKING CONCRETE PAVERS

(A) DESCRIPTION

This work shall consist of constructing permeable interlocking concrete pavers on a prepared sub-grade in accordance with these specifications and in conformity with the lines, grades, thicknesses and typical sections shown in the contract documents or as directed by the Engineer.

The permeable interlocking concrete pavers shall consist of a concrete pavers, permeable joint material, open-graded bedding course, open graded base and subbase material, underdrain, geotextile to reduce runoff and water pollution.

(B) REFERENCES

ASTM C936 – Solid Concrete Interlocking Paving Units

ASTM C979 – Standard Specification for Pigments for Integrally Colored Concrete

ASTM No. 8, 9 and 89 – Grading Requirements for Bedding Material

ASTM No 57 – Grading Requirements for Base Material

ASTM No, 2, 3 and 4 - Grading Requirements for Subbase Material

ASTM C979 – Standard Specification for Pigments for Integrally Colored Concrete

ASTM C67 – Standard Test Methods for Sampling and Testing Brick and Structural Clay Tile

ASTM C140 - Standard Test Methods for Sampling and Testing Concrete Masonry Units and Related Units

ASTM C150 – Standard Specification for Portland Cement

ASTM C418 - Standard Test Method for Abrasion Resistance of Concrete by Sandblasting

(C) MATERIALS

Materials shall be approved in accordance with the following:

1. All concrete pavers shall meet ASTM C936 requirements.
2. Bedding and Joints: AASHTO #8 aggregate or similar, as directed by the Contract Documents and in accordance with Specification for “Aggregates for Green Streets Facilities” section.
3. Open graded base layer should match the specifications on “Aggregates for Green Streets Facilities” section
4. Open graded subbase: The stone sizes are larger than the base, primarily 3 in. down to 2 in. (75 mm down to 50 mm), typically ASTM No. 2, 3 or 4 stone. Like the base layer, water is stored in the spaces among the stones. The subbase layer thickness de pends on water storage requirements and traffic loads. A subbase layer may not be required in pedestrian or residential driveway applications. In such instances, the base layer thickness is increased to provide water storage and support.

5. Underdrain pipes should match the standard specification on “underdrain for stormwater facilities” section

6. Geotextiles should match the standard specification on “Geosynthetics for stormwater” section

7. All unit pavers shall meet surface requirements of the latest Americans with Disabilities Act (ADA) requirements and accessibility guidelines.

8. Interlocking concrete pavers shall be of the type, style, color, and other details as described in the Contract Documents and in accordance with all manufacturer’s recommendations for the selected unit paver system.

a. Shapes: rectangular, L-shaped, hexagonal, square as specified in design plans
b. Thickness: 3 1/8 in. for vehicular use, 2 3/8 in. for pedestrian use.
c. Colors will match surrounding conditions as specified in design plans: Light gray, brick
d. Concrete Unit Pavers: The material and fabrication for the unit pavers shall meet or exceed the requirements of ASTM C936 "Solid Concrete Interlocking Paving Units” and must allow a minimum infiltration rate of 60 in/hr through the pavement upon installation.

    i. Portland cement: ASTM C150, Type 1.

    ii. Aggregate: Normal weight ASTM C33.

    iii. Pigments: ASTM C979 and as specified in the Contract Documents.

    iii. Other constituents: Previously established by test or experience as suitable for use in concrete, in compliance with applicable ASTM standards or as otherwise approved by the Engineer

    iv. Paver physical properties:

        (a) Provide only sound units free of defects that would allow proper placing of units to achieve the specified pavement strength and performance.
        (b) Compressive strength: ASTM C140, when delivered to the project site, average compressive strength of not less than 8,000 psi, with no individual unit less than 7,200 psi.
        (c) Absorption: ASTM C140, average absorption not greater than 5%, with no individual unit greater than 7%.
        (d) Resistance to freezing and thawing: ASTM C67, with no breakage and not greater than 1% loss in dry mass of any individual unit after 50 cycles of freezing and thawing.
        (e) Abrasion resistance: ASTM C418, maximum volume loss of 0.915 cubic inches / 7.75 sq. in. Average thickness loss of no more than 0.118” (3 mm) due to abrasion testing.
        (f) Dimension tolerances: Length +/- 1/16”, Height +/- 1/8”

(D) SUBMITTALS

Contractor shall submit drawings and documentation as required in this specification and obtain written acceptance of submittals before using the materials or methods requiring

approval.

1. **Contractor Qualifications** – At the time of bid submission, Contractor shall:
   a. Submit the name and qualifications of the installer, providing written evidence of project experience and proficiency in successfully completing permeable interlocking paver construction including a minimum of three (3) completed projects, total square footage to exceed the project quantities with owner information, address and a sample of the product used, or photographs thereof, and the following: complete description of the product type and style; and details of the manufacturer's mold assembly with patterns, dimensions, all edge details and radii, spacer bars, and the mold head or shoe; and
   b. Submit written evidence of an Installer who will be onsite at all times during the permeable interlocking paver installation, with a current certificate from the Interlocking Concrete Pavement Institute (ICPI) Installer Certification Program and a record of completion from the Permeable Interlocking Concrete Pavers (PICP) Specialist Course, or
   c. Submit written evidence that the Contractor will obtain the service of a consultant who has the required certifications and who will be on site at all times during the interlocking concrete paver installation, acting as the installer for the project.

2. **Testing Agency** – Within seven (7) days after notice to proceed, the Contractor shall submit the name and location of a third party QA testing agency with experience in testing permeable interlocking unit pavements, who will oversee and document production and assembly. Use of testing services will not relieve contractor of the responsibility to furnish materials and construction in full compliance with the Contract Documents.

3. **Producer Qualifications** – Within seven (7) days after notice to proceed, the Contractor shall furnish the name and location of the plant that will produce the interlocking concrete pavers.

   a. Product Information: The plant shall provide product information including all material sources and all manufacturers' recommendations that are relevant to the project.
   b. Certifications: The plant shall provide current certifications, signed by the material sources as relevant, stating that the materials will meet or exceed all specified requirements.
   c. Samples: The plant shall provide three (3) samples of interlocking concrete pavers.

4. **Test Panels –** At least fifteen (15) days before construction of interlocking concrete pavers, and following the engineer's acceptance of the qualifications described above, the Contractor shall provide a minimum of one (1) test panel for acceptance. Place, joint and cure the test panel, to be a minimum of 275 square feet in size or as specified in the Contract Documents, at the required project thickness to demonstrate to the engineer's satisfaction that the unit pavers and design flow rates are acceptable, and that a satisfactory pavement can be installed at the site location. Testing shall be in accordance with Section (G).

5. **Test Reports** - Submit test reports certifying compliance with all material and physical requirements stated herein. All tests shall have been conducted not more than twelve (12) months before manufacturing of the interlocking concrete pavers.

(E) PREPARATION OF GRADE

1. **Sub-Grade Preparation** – Shall be in accordance with Specification for Aggregates for Green Streets Facilities.

2. **Base Materials** – Shall be in accordance with Specification for Aggregates for Green Streets Facilities.

3. **Edge Restraints** - Install all edge restraints of the types, locations and dimensions shown on the Contract Documents and at the lines and grades required. Permeable interlocking pavement shall not be allowed without edge restraints around the entire perimeter without the written approval of the Engineer.

4. **Protection** - Shall be in accordance with Specification for Aggregates for Green Streets Facilities.

(F) INSTALLATION

1. Pre-Placement Conference - A mandatory pre-installation conference will take place at least two (2) weeks prior to installation of the unit pavers and shall include at a minimum engineer, inspector, general contractor, permeable interlocking concrete paver installer, manufacturer, and field testing agency.

2. Install geotextile, impermeable liner and drain pipes if required in the plans and contract in accordance with the specifications for the Geosynthetics for Green Streets Facilities

3. Install base materials in accordance with the Specification for Aggregates for Green Streets Facilities.

4. Moisten, spread and screed aggregate bedding material and fill any voids left by screed rails. Do not roll or compact the bedding material prior to placing permeable interlocking pavers.

5. Lay the interlocking concrete pavers in the type, style, pattern, dimensions, and locations with joint widths as recommended by the Manufacturer and shown on the Contract Documents. Maintain consistent and uniform patterns for the entire pavement area.

6. Fill gaps at the edges of the paved area with cut units. Cut pavers subject to vehicular traffic shall be no smaller than 1/3 of a whole unit and shall have no sharp edges. Patterns shall be maintained to the extent possible in placing cut units to fill gaps in the pattern. Stagger blocks to avoid running bond or other straight joints or seams in the pattern.

7. Fill the openings and joints with washed ASTM No. 8 aggregate. Some paver joint widths may be too narrow to accept most No. 8 stone. In such case, use joint material that will fill joints such as washed ASTM No. 89 or No. 9 stone. Sweep excess aggregate from the surface.

8. Compact and seat the interlocking concrete pavers into the bedding material using a low amplitude, 75-90 Hz plate compactor capable of at least 5,000 lbf centrifugal compaction force. This will require at least two (2) passes with the plate compactor over the entire surface.

9. Apply additional ASTM #8, #9 or #89 aggregate to the openings and joints as needed, filling them in completely, then remove excess aggregate by sweeping, and make at least two (2) more passes with the plate compactor over the entire surface.

10. All interlocking concrete pavers within six (6) feet of the laying face must be fully compacted at the completion of each day's work.

(G) TESTING

Testing responsibilities will be performed by the Contractor's testing agency or the

Manufacturer at the Contractor's expense, as described below. Materials approval testing will be performed by the County-approved lab. Failure to detect defective work or materials early will not prevent rejection if a defect is discovered nor shall it obligate the owner for final acceptance at any time.

1. **Manufacturer's Testing** – Testing of the materials to demonstrate compliance with the requirements of Section (C) of this specification shall be the combined responsibility of the Contractor and the manufacturer. Test results shall be approved by the Engineer in advance of the construction work.

2. **Smoothness Testing** - Test finished unit paver system with a 10 foot straightedge, applied parallel with and at right angles to the center line of the paved area. Correct deviations in the surface in excess of one-half (1/2) inch by removing the unit pavers as necessary and then loosening, adding or removing material, re-shaping, watering, and re-compacting. The smoothness requirements specified herein apply only to the top lift of each layer, when base course is constructed in more than one lift.

3. **Infiltration Testing** - The full permeability of the pavement surface shall be tested prior to final acceptance by application of clean water at least 5 gallons per minute, using a hose or other distribution device. Water used for the test shall be clean, free of suspended solids and deleterious liquids. All applied water shall infiltrate directly without large puddle formation or surface runoff, and the testing shall be observed by the Engineer. A minimum flow rate of 60 inches per hour is required.

(H) PROTECTION

1. As construction is completed, maintain and protect the permeable pavement. Correct deficiencies in thickness, composition, construction, and smoothness, which develop during the maintenance, to conform to the requirements specified herein.

2. Finishing along the edges of the permeable pavement for protection during construction shall be until the site is fully stabilized, at which time excess filter fabric and impermeable liners can be cut back to the pavement edges.

3. In addition, runoff onto permeable pavement shall be minimized until the site is fully stabilized as described in the Contract Documents. Diversion ditches or other approved types of erosion and sediment control measures shall be placed at the toe of slopes which are adjacent to permeable pavement, to prevent sediment from washing into pavement areas at all times during and after construction. Any sediment accumulation onto the permeable pavement shall be removed immediately by cleaning or replacement of the aggregate by the Contractor at no cost to the owner.

(I) MEASURE AND PAYMENT

The unit of measure for Permeable Interlocking Concrete Paver Pavement will be in square yards for the type(s) specified in the Contract Documents. The actual number of square yards complete in place will be paid for at the contract unit price per square yard, or adjusted unit price per square yard, which payment includes unit pavers, bedding material, and joint filler, complete and in place. Payment will include costs for furnishing all materials, labor, tools, equipment and incidentals to complete the work.

ENGINEERED SOILS: RAIN GARDEN, PLANT BED, AND SAND BASED SOILS

(A) DESCRIPTION

This work consists of supplying, testing, amending, mixing and installing various planting soil categories for use in stormwater management and horticultural plantings, covering the following:

1. Planting Soil shall refer to Rain Garden Soil, Plant Bed Soil, and/or Sand-Based Structural Soil.
2. Rain Garden Soil: soil blend for use in stormwater rain garden facilities.
3. Plant Bed Soil: planting medium for trees, shrubs, and groundcovers in Plant Beds
4. Sand Based Structural Soil: soil blend for trees where planting soils are beneath paved surfaces and horticultural subsoil.
5. Compost: a soil amendment to be used with existing soil
6. Sand: for beneath structural soils as required in Contract Documents

Except as herein stated, the requirements specified for Green Book Standard Specifications Section 800 “Landscaping and Irrigation” are applicable to this specification.

(B) MATERIALS

1. GENERAL – Rain Garden, Plant Bed, and Sand Based Structural Soil Mixtures

   a. Soils mixtures are composed of a blend of three base components: base loam, organic material and sand. The Soil Supplier is responsible for locating and obtaining approval of sources for base loam, organic material and sand that meet the Specification requirements. The Soil Supplier is responsible for mixing the components. Approximate mixing ratios are as specified herein, but may require adjustment, depending on the characteristics of the final base materials.

   b. Base Components

      (i) Base Loam: a natural A-horizon growing medium free from admixtures.

      (ii) Organic Material or Compost: a fully decomposed yard waste organic material.

      (iii) Sand: uniformly-graded medium to coarse sand.

   c. Soil medium materials shall fulfill the requirements as specified and be tested to confirm the specified characteristics.

2. BASE LOAM

   a. Base Loam shall be natural A-horizon topsoil free of subsoil, large stones, earth clods, sticks, stumps, clay lumps, roots or other objectionable, extraneous matter or debris. Base Loam shall also be free of primary noxious weeds. Base Loam shall not be delivered or used for planting while in a frozen or muddy condition.

Base Loam for mixing shall conform to the following grain size distribution for material passing the #10 sieve by weight:

U.S. Sieve Size Number	Percent Passing	
	Minimum	Maximum
10	100	---
18	85	100
35	70	95
60	54	85
140	42	68
270	36	60
0.002mm	3	12

b. Maximum size shall be one-inch largest dimension. The maximum retained on the #10 sieve shall be 20% by weight of the total sample. Tests shall be by combined hydrometer and wet sieving in compliance with ASTM D422 after burning off organic matter by ignition. The organic content shall be between 3.0 and 6.0 percent by weight. Base Loam shall have a well-developed and stable crumb structure.

c. Unless otherwise recommended by the Soil Supplier's Soil Scientist: Cation Exchange Capacity shall be not less than 12 and Soluble Salts shall be not more than 2,000 ppm/2.0 mmhos/cm.

3. COARSE SAND FOR SOIL MIXTURES

a. Sand for blending, protection layer above filter fabrics, and drainage below planting soils shall be uniformly graded medium to coarse sand consisting of clean, inert, rounded to sub-angular grains of quartz or other durable rock free from loam or clay, surface coatings and deleterious materials, include no more than 0.5% mica, and have the following gradation for material passing the #10 sieve by weight.

U.S. Sieve Size Number	Percent Passing	
	Minimum	Maximum
10	100	---
18	60	80
35	25	45
60	8	20
140	0	8
270	0	3
0.002mm	0	0.5

b. Maximum size shall be one-inch largest dimension. The maximum retained on the #10 sieve shall be 15% by weight of the total sample. The ratio of the particle size for 70% passing (D70) to the particle size for 20% passing (D20) shall be 3.0 or less (D70/D20 <3.0). Tests shall be by combined hydrometer and wet sieving in compliance with ASTM D422 after burning off organic matter by ignition.

c. Coarse sand shall be non-calcite and shall not be derived from serpentine. pH shall be less than 7.5.

4. ORGANIC AMENDMENT (COMPOST)

a. Organic Matter for amending planting soils shall be a stable, humus-like material produced from the aerobic decomposition and curing of leaf and yard waste composted for a minimum of one year (12 months). The leaf and yard waste compost shall be free of debris such as plastics, metal, concrete or other debris. The leaf and yard waste compost shall be free of stones larger than 1/2", larger branches and roots. Wood chips over 1" in length or diameter shall be removed by screening. The compost shall be a dark brown to black color and be capable of supporting plant growth with appropriate management practices in conjunction with addition of fertilizer and other amendments as applicable, with no visible free water or dust, with no unpleasant odor, and meeting the following criteria as reported by laboratory tests.

(i) The ratio of carbon to nitrogen shall be in the range of 12:1 to 25:1.

(ii) Stability shall be assessed by the Solvita procedure. Protocols are specified by the Solvita manual (latest version). The compost must achieve a maturity index of 6 or more as measured by the Solvita scale. Stability tests shall be

conducted by a County approved lab.

(iii) Pathogens/Metals/Vector Attraction reduction for compost material derived from biosolids shall meet 40 CFR Part 503 rule, Table 3, page 9392, Vol. 58 No. 32, (for applications to soils with human activity).

(iv) Organic Content shall be at least 20 percent (dry weight). One hundred percent of the material shall pass a 3/8-inch (or smaller) screen. Debris such as metal, glass, plastic, wood (other than residual chips), asphalt or masonry shall not be visible and shall not exceed one percent dry weight. Organic content shall be determined by weight loss on ignition for particles passing a number 10 sieve.

(v) pH: The pH shall be between 6.5 to 7.2 as determined from a 1:1 soil-distilled water suspension using a glass electrode pH meter American Society of Agronomy Methods of Soil Analysis.

(vi) Salinity: Electrical conductivity of a one to five soil to water ratio extract shall not exceed 2.5 mmhos/cm (dS/m).

(vii) The compost shall be screened to 1/2 inch maximum particle size and shall contain no more than 3 percent material finer than 0.002mm as determined by hydrometer test on ashed material.

(viii) Chemical analysis shall be undertaken for Nitrate Nitrogen, Ammonium Nitrogen, Phosphorus, Potassium, Calcium, Aluminum, Magnesium, Iron, Manganese, Lead, Soluble Salts, Cation Exchange Capacity, soil reaction (pH), and buffer pH. The Soil Supplier's Soil Scientist shall provide a recommendation as to the suitability of the compost based on review of the test results.

5. SOIL ADDITIVES

   a. Ground Limestone: dolomitic limestone and contain not less than 50 percent of total carbonates and 25 percent total magnesium with a neutralizing value of at least 100 percent. Material shall be ground to such fineness that 40 percent will pass through the 100 mesh U.S. standard sieve and 98 percent will pass through the 20 mesh U.S. standard sieve.

   b. Acidulant for adjustment of planting soils pH shall be commercial grade sulfur, ferrous sulfate, or aluminum sulfate for horticultural use that are unadulterated. Acidulants shall be delivered in unopened containers with the name of the manufacturer, material, analysis and net weight appearing on each container.

   c. Fertilizer: slow-release granular or pelleted fertilizer consisting of 50 percent water-insoluble nitrogen, phosphorus, and potassium in a composition as recommended by the Soil Testing Laboratory.

   d. Use of peat moss is prohibited.

6. SAND – for the layer underneath structural soil as called for in the Contract Documents shall meet the gradation requirements of Section (B), Subsection 3 of this provision.

(C) SUBMITTALS AND TESTING

1. Critical Path Processing -Soils Testing Report Submittals. The Contractor is responsible for recognizing that these project materials warrant timely and serious attention, that the testing process to achieve approved materials shall be considered a lead time item, and that under no circumstance shall failure to comply with all specification requirements be an excuse for a delay or for expedient substitution of unacceptable material(s).

2. Sources for Soil Components and Soil Mixes: Within seven (7) days after notice to proceed, submit information identifying sources for soil components and the firm responsible for mixing of soil mixes:

   a. Soil mix supplier shall have a minimum of five years of experience supplying custom planting soil mixes.
   b. Submit supplier name, address, telephone and fax numbers and contact name.
   c. Submit certification that accepted supplier is able to provide sufficient quantities of materials and mixes for the entire project.

3. Testing Agency**:** Within seven (7) days after notice to proceed, Contractor shall furnish the name and location of the proposed testing agency. Agency proposed for testing of horticultural soils shall be an approved member of the Performance Assessment Program (PAP) administered by the North American Proficiency Testing (NAPT) Oversight Committee. The Testing agency shall be accepted by the County Engineer.

4. Product Data: No later than 30 days prior to planned soil construction, submit most recent printed information from manufacturer for:

   a. Organic Material: identify the material(s) from of which is it composed and identify the location where material was composted.
   b. Fertilizers
   c. Ground Limestone
   d. Sulfur

5. Samples and Test Reports: Submit representative samples and reports to the Engineer and the Testing Agency as described herein for approval. Delivered materials shall closely match the approved samples.

   a. Submit 1 gallon soil samples and horticultural soil test reports in two phases.

      (i) Planting Soil Base Components:

      - Base Loam
      - Organic Amendment (Compost)
      - Sand

      Submit samples of above to the Testing Agency. Submit soil testing reports to Engineer no later than 21 days prior to planned soil construction.

(ii) Only after approval of base components, submit soil blend mixes / mediums for approval. Mixing and batching of soil mediums in the same manner as bulk soils will be prepared for delivery to site, and shall include:

- Rain Garden Soil
- Plant Bed Soil
- Sand-Based Structural Soil

Submit samples of above to the Testing Agency. Submit duplicate samples and soil testing reports to Engineer no later than 14 days prior to planned soil construction.

(iii) Samples of each soil type delivered to the site shall be taken and tested for conformance with the Specification Requirements. Submit duplicate samples and soil testing reports to Engineer.

b. Soil Sampling: Sampling shall be done by the Soil Supplier. Samples shall be representative of the material to be brought to the site. Each sample shall be a Composite Sample, which consists of 5 separate sub-samples taken from a minimum of (5) different locations at each source and mixed together to make the test sample.

c. Test Reports shall be certified and shall cover the items below. <u>All reports must be from recent analyses, less than 90 days old, and represent materials that are available for delivery to the site.</u>

(i) Mechanical gradation (sieve analysis) shall be performed and compared to the USDA Soil Classification System.

(ii) The silt and clay content shall be determined by a Hydrometer Test of soil passing the #270 sieve. Percent clay (0.002 mm) shall be reported separately in addition to silt (ASTM D-422-63, hydrometer method).

(iii) Chemical analysis shall be undertaken for Nitrate Nitrogen, Ammonium Nitrogen, Phosphorus, Potassium, Calcium Magnesium, Aluminum, Manganese, Cation Exchange Capacity, Soluble Salts, acidity (pH) and buffer pH.

Tests shall be conducted in accordance with California Test Methods (CTM).

Certified reports on analyses from producers of composted organic materials are required. Analyses will include all tests for criteria specified herein.

(b) Density Tests: In-place density testing is required in all areas. Placed planting soils must be inspected for compaction level by the soil scientist or by the following: ASTM D1556 Density of Soil and Rock In Place Using Sand Cone Method, ASTM D6398-10 Nuclear Methods or ASTM D2167-08 Rubber Balloon method. AASHTO T-99 (Standard Effort) in accordance with County specifications shall be used for Laboratory Compaction Characteristics of Soil unless otherwise directed.

- Contractor shall perform In-place density tests at a rate of one test per 2,000 square feet for each type of material placed.

(c) Test data and recommendations for soil amendments including but not limited to: nitrogen, phosphorus, potassium and limestone

6. Certificates: No later than 7 days prior to planned soil construction, submit certification that soil blend components and soil mediums meet applicable environmental standards of the County.

(D) PROPORTIONING

Soil Supplier shall uniformly mix ingredients on an approved hard surface area or with soil blending equipment. Soils and Organic Amendment shall be maintained moist, not wet, during mixing. Amendments shall not be added unless approved to extent and quantity by the owner and additional tests have been conducted to verify type and quantity of amendment is acceptable. Percentages of components, unless otherwise noted, will be established upon completion of individual test results for components of the various mixes.

After component percentages are determined by the Soil Supplier's Soil Scientist, each planting soil medium shall be tested for physical and chemical analysis.

1. RAIN GARDEN SOIL

   Rain Garden Soil shall consist of a blend of approximately 55% by volume Coarse Sand, 20% by volume Base Loam and 25% by volume of Organic Amendment. This blend will comply with the rain garden soil requirement in the County of San Diego Low Impact Development Handbook, in which soil components are given by weight. The components shall be blended to create a uniform mixture that meets the following criteria. Percentages will be adjusted as necessary to achieve the following grain size distribution and criteria below for material passing the #10 sieve by weight:

U.S. Sieve Size Number	Percent Passing	
	Minimum	Maximum
10	100	--- (Coarse Sand)
18	68	95 (Coarse Sand)
35	38	65 (Coarse Sand)
60	22	37 (Fine Sand)
140	15	22 (Fine Sand)
270	12	14 (Silt)
0.002mm	1	4 (Clay)

a. Maximum size shall be one inch largest dimension. The maximum retained on the #10 sieve shall be 15% by weight of the total sample.
b. The ratio of the particle size for 70% passing (D70) to the particle size for 20% passing (D20) shall be 4.5 or less (D70/D20 <4.5).
c. The final mix shall have a saturated hydraulic conductivity of not less than 4.0 inches per hour according to test procedure ASTM D5856-95 (2000) when compacted to a minimum of 86 percent of the maximum density as determined by AASHTO T-99. The mix shall be compacted at 60% to 80% optimum moisture content.
d. Organic content shall be between 3.0 and 4.0 percent by weight.
e. Unless otherwise specified or recommended by the Soil Supplier's Soil Scientist: pH shall be between 6.5 and 7.2; CEC shall be a minimum of 7; P-Index shall be between 10 and 30; and Soluble Salts shall be less than 500 ppm/0.5 mmhos/cm.

2. PLANT BED SOIL

Base Loam, Sand and Compost, each as specified above, shall be combined in approximately equal parts by volume Sand, Base Loam and Compost to create a uniform blend which meets the following requirements. Percentages will be adjusted as necessary to achieve the following grain size distribution and criteria below for material passing the #10 sieve by weight:

U.S. Sieve Size Number	Percent Passing	
	Minimum	Maximum
10	100	--- (Coarse Sand)
18	80	95 (Coarse Sand)
35	56	80 (Coarse Sand)
60	32	56 (Fine Sand)
140	23	32 (Fine Sand)
270	19	23 (Silt)
0.002mm	2.5	8 (Clay)

a. Maximum size shall be one inch largest dimension. The maximum retained on the #10 sieve shall be 15% by weight of the total sample.
b. Saturated hydraulic conductivity of the mix: not less than 3 inches per hour according to ASTM D5856-95 (2000) when compacted to a minimum of 84% of the maximum density as determined by AASHTO T99. The mix shall be compacted at 60% to 80% optimum moisture content.
c. Organic content: between 5.0 and 6.5 percent by weight.
d. Unless otherwise specified or recommended by the Soil Supplier's Soil Scientist: pH shall be between 6.5 and 7.2; CEC shall be a minimum of 10; and Soluble Salts shall be less than 2,000 ppm/2.0 mmhos/cm.

4. SAND-BASED STRUCTURAL SOIL

Sand-Based Structural Soil shall consist of a blend of approximately 60% by volume Coarse Sand, 15% by volume Base Loam and 25% by volume Organic Amendment. The components shall be blended to create a uniform mixture. Percentages will be adjusted as necessary to achieve the following grain size distribution and criteria below for material passing the #10 sieve by weight:

U.S. Sieve Size Number	Percent Passing	
	Minimum	Maximum
10	100	--- (Coarse Sand)
18	68	90 (Coarse Sand)
35	38	63 (Coarse Sand)
60	18	39 (Fine Sand)
140	10	18 (Fine Sand)
270	8	10 (Silt)
0.002mm	1	4 (Clay)

a. Maximum size shall be one inch largest dimension. The maximum retained on the #10 sieve shall be 15% by weight of the total sample.
b. The ratio of the particle size for 70% passing (D70) to the particle size for 20% passing (D20) shall be 3.0 or less (D70/D20 <3.0).
c. The final mix shall have a saturated hydraulic conductivity of no less than 6.0 inches per hour according to test procedure ASTM D5856-95 (2000) when compacted to a minimum of 88 percent of the maximum density as determined by AASHTO T-99, unless the soil will be placed in an area that experiences loading. If the soil will be placed under sidewalk, curbs or gutter, the density shall be a minimum of 93 percent maximum dry density as determined by AASHTO T-180. The mixes shall be compacted at 60% to 80% optimum moisture content.
d. Organic content shall be between 2.5 and 3.5 percent by weight.
e. Unless otherwise specified or recommended by the Soil Supplier's Soil Scientist: pH shall be between 6.5 and 7.2; CEC shall be a minimum of 6; and Soluble Salts shall be less than 500 ppm/0.5 mmhos/cm.

(E) PREPARATION AND MIXING OF PLANTING SOIL MIXES

Preparation, amendment, and mixing of the planting soil shall be performed at the Soil Supplier location. The following procedure shall be followed:

1. Soil shall be amended to meet pH requirements and horticultural deficiencies as determined by the County-approved Testing Agency.

2. Examine soil and remove foreign materials, stones and organic debris over 1/2” in size.

3. Correct deficiencies in soil as directed by horticultural soil test results. If lime is to be added, it shall be mixed with dry soil before fertilizer is added and mixed.

4. Planting soil mixtures shall be produced with equipment that blends together each component in a thorough and uniform manner.

5. Preparation and mixing shall be accomplished when the soil moisture content is less than field capacity and at a moisture content approved by the County and the Soil Scientist.

6. Incorporate pre-plant fertilizer as directed.

(F) DELIVERY, STORAGE AND HANDLING

1. Material shall not be handled or hauled when it is wet or frozen. Soil shall be hauled only when the moisture content is between 60% and 100% of optimum moisture content as determined by AASHTO T-99 for all planting soils except Sand-Based Structural Soil which shall be determined by AASTO T-180. Stockpiles shall be covered during wet weather. The Soil Supplier is responsible for meeting these requirements until the soil is delivered to the site. Soil which is delivered that exceeds the allowable maximum moisture content shall be replaced with new soil that meets the requirements.

2. Contractor shall store and handle packaged materials in strict compliance with manufacturer's instructions and recommendations. Protect all materials from weather, damage, injury and theft.

(G) PRE-INSTALLATION EXAMINATION AND PREPARATION

1. Coordinate activities with other project contractors so that there is no soil disturbance from traffic or other construction activities subsequent to placement.

2. Pre-Installation Examination Required: The Contractor shall examine previous work, related work, and conditions under which this work is to be performed and shall notify the Engineer in writing of all deficiencies and conditions detrimental to the proper completion of this work. Beginning work means Contractor accepts substrates, previous work, and conditions. The Contractor shall not place any planting soil until all work in adjacent areas is complete and approved by the County.

3. Examination of Conditions: Prior to the start of soil placement existing conditions shall be reviewed. Any deficiencies shall be noted and related to the County in writing prior to acceptance of the subgrade by the Landscape Contractor. Deficiencies include, but shall not be limited to the following:

    a. Construction debris present within the planting areas.
    b. The subgrade is at incorrect depths for installing the designed soil profile and/or drainage layer.
    c. Incomplete irrigation and/or subsurface drainage installation.

(H) SUBGRADE PREPARATION

1. Coordinate the following scarification work to eliminate subgrade compaction resultant from Construction Operations when located in planting areas.

    a. General Site Subgrade Compaction Mitigation for all planting areas that are not heavily compacted:

        (i) Immediately prior to placing any Planting Soil or any drainage materials beneath planting soils, the entire subgrade shall be loosened to a minimum depth of 3-inches using the teeth of a backhoe or other suitable equipment.

        (ii) After the subgrade soils have been loosened, re-compressed and inspected, remove any stones or debris 6” or greater and dispose off of the project site. Do not bury large stones or debris.

(I) PREPARATION OF SOILS

The contractor or soil supplier shall not work soil when the moisture content is less than 60% nor more than 100% of optimum moisture content as determined by AASHTO T-99 for all planting soils except Sand-Based Structural Soil which shall be determined by AASTO T-180 or when it is frozen. Apply water, if necessary, or dry the soil to bring soil within the acceptable moisture content range.

(J) PLACEMENT OF DRAINAGE MATERIALS AND SOIL LAYERS

1. Preparation for Placement of Planting Soils

    a. Notify the County of soil placement operations at least seven calendar days prior to the beginning of work.
    b. Prevent compacting soils by beginning work in corner, against walls, or the center of isolated beds, and progressing outwards towards borders.
    c. Never move or work Planting Soils when wet or frozen.
    d. Place barricades as required to prevent compaction of planting soil from vehicles, equipment, or pedestrian traffic.

2. In accordance with the Contract Document and Detail Drawings, proceed with placement of base materials as follows:

    a. Where geosynthetics are required per the contract plans, place geosynthetic layers in accordance with the specification for Geosynthetics for Green Streets Facilities.
    b. Where subsurface storage is required, place sand or stone layer as shown on the drawings in accordance with the specification for Aggregates for Green Streets Facilities.
    c. Where subsurface drainage is required, install in accordance with the specification for Underdrains for Stormwater Facilities.

3. General Placement Requirements

    a. No rubber-tired equipment or heavy equipment except for a small bulldozer shall

pass over the subsoils (subgrade) after they have been loosened and recompressed. If the Contractor plans to utilize such areas for any use of heavy equipment, this work should be carried out prior to beginning the process of loosening soils or filling in that area.

b. Place and spread Planting Soils in layers as specified to a thickness greater than required such that after settlement,

c. The surface area of each lift, including the subgrade after it has been compacted, shall be scarified by raking immediately prior to placing the next lift.

d. Place and spread topmost layers of planting medium to the thickness such that, after settlement, finished grades conform to the lines, grades and elevations shown on the Drawings. Ensure proper drainage in an uninterrupted pattern free of hollows and pockets.

e. All planting soils shall be placed at a moisture content between 60% and 100% of optimum moisture content as determined by AASHTO T-99 for all planting soils except Sand-Based Structural Soil which shall be determined by AASTO T-180.

4. Place Rain Garden Soil as follows:

   a. Swales: Place and spread in lifts not greater than twelve inches and compact each layer to a density of 85% plus or minus 2% of maximum density as determined by AASHTO T-99.

   b. Other Rain Garden areas: Place and spread in lifts not greater than twelve inches and compact each layer to a density of 83% plus or minus 2% of maximum density as determined by AASHTO T-99.

5. Place and spread Planting Bed Soil in lifts not greater than twelve inches and compact to a density of 82% plus or minus 2% of maximum density as determined by AASHTO T-99.

6.

7. Place Sand Based Structural Soil as follows:

   a. Beneath Pavements: Spread in lifts not greater than eight inches and compact with a minimum of two passes of vibratory compaction equipment to a density of 93% plus or minus 1% of maximum density as determined by AASHTO T180.

   b. As Horticultural Subsoil: Spread in lifts not greater than twelve inches and compact to a density of 85% plus or minus 1% of maximum density as determined by AASHTO T-99.

   c. The Contractor shall construct a Mock Up of the initial installation of Sand Based Structural Soil in the presence of the County-or its representative. The Mock Up may be part of the permanent installation. The Mock Up shall be conducted with the same equipment that will be used for the duration of the Sand Based Structural Soil installation. Mock Up must be conducted with compliant soil moisture conditions. A geotechnical testing agency shall be on site to conduct soil moisture and compaction/density tests for each lift installed during the Mock Up.

(K) PROTECTION

1. Protect newly graded areas from traffic, freezing and erosion. Keep free of trash, debris or construction materials from other work.
2. Repair and re-establish grades to specified tolerances where completed or partially completed surfaces become eroded, rutted, settled, or compaction due to subsequent construction operations or weather conditions. Scarify or remove and replace material to a depth as directed by the Engineer and the Soil Scientist; reshape and re-compact at optimum moisture content to the required density.
3. Where settling occurs, before final acceptance or during the warranty period, remove finish surfacing, backfill with additional approved soil, compact to specified rates, and restore any disturbed areas to a condition acceptable to the Owner.

(L) COORDINATION AND EXCESS MATERIALS

1. Coordinate activities with other project contractors so that there is no soil disturbance from traffic or other construction activities subsequent to placement.
2. Excess Planting Soil Mixtures and Materials: Remove excess planting mediums and materials from the site.

(M) POST-INSTALLATION TESTING

In-place density testing shall be performed by the Contractor at a rate of 1 per 2000 square feet for each type of material placed. The standard test for surface and subsurface density shall be ASTM D 2922-01: Standard Test Method for Density of Soil and Soil-Aggregate in Place by Nuclear Methods (Shallow Depth).

(N) MEASURE AND PAYMENT

1. Rain Garden Soil, planting bed soil, sand-based structural soil, compost, and sand each will be measured in cubic yards complete in place.
2. Payment will be made at the respective contract unit price per cubic yard, which payment will include preparing areas to receive the soil, furnishing, transporting, installing and testing the soil mixtures including all amendments, and all labor, tools, equipment and incidentals necessary to complete the work.

DOMED OVERFLOW RISER

(A) DESCRIPTION

This work shall consist of furnishing and placing domed overflow risers in rain garden facilities as shown in the contract documents, or as directed by the Engineer. Except as herein stated, the requirements specified for Green Book Standard Specifications Sections 206 “Miscellaneous Metal item”, 207 “gravity Pipe”, and 208 “Pipe joint types and Material” are applicable to this specification.

(B) MATERIALS

1. PVC Riser Structure: Schedule 40 bell and spigot and conform to Green Book Standard Specifications Section 207-17 “PVC Gravity Pipe”.
2. Concrete Pipe Riser: PCC Pipe per Green Book Standard Specifications Section 207-2 “Reinforced Concrete Pipe”
3. Concrete for Riser or Catch Basin: per Green Book Standard Specifications Section 201-1.1.2 “Concrete Specified by Class and Alternate Class”.
4. Domed/Beehive Grate: 12” to 30” diameter domed grate using Cast Iron. Ductile Iron, or High Density Polyethylene as shown on the plans.

(C) CONSTRUCTION REQUIREMENT

Provide domed risers for rain garden facilities placed on aggregate stone as indicated in the Drawings. Top of riser shall be set as specified in the contract plans for ponding depth and a minimum 3 inches below adjacent sidewalk or top of curb. Connect riser to underdrain piping using the appropriate reducer fittings, tees, and/or elbows.

(D) MEASURE AND PAYMENT

The unit of measure for Domed Overflow Risers will be each. Payment for Domed Overflow Risers will be made at the Contract unit price per each for the diameter specified, which will include excavation, shoring, backfill, compaction, installation of pipe riser and stone base including connections, gaskets, domed/beehive grate, and all labor, materials, tools, equipment and incidentals needed to complete work specified.

CHECK DAMS FOR STORMWATER FACILITIES

(A) DESCRIPTION

Work under this item includes the installation of check dams to slow and hold water flow in the stormwater facilities. Except as herein stated, the requirements specified for Green Book Standard Specifications Sections 201 “Concrete, Mortar, and Related Materials” and 303 “Concrete and Masonry Construction” are applicable to this specification.

(B) MATERIALS

1. Stone: shall meet the requirements set forth in the Specification for Aggregates for Stormwater Management, design plans, or modified in the Special Provisions.
2. Concrete: per Green Book Standard Specifications Section 201-1.1.2 Concrete Specified by Class and Alternate Class”
3. Reinforcement: Reinforcing Steel, Grade 60 per Green Book Standard Specifications Section 201-2 “Reinforcement for Concrete”
4. Gabion:

   All wire including tie and connecting wire shall have a tensile strength of at least 60 000 psi when tested per ASTM A 370. All wire sizes and mesh spacing shall be as recommended by the manufacturer. Stainless steel interlocking fasteners meeting ASTM A 313 may be substituted for wire ties. When subjected to directional tension along its axis, the fastener shall remain in a closed and locked condition for a minimum force of 900 lb.

   Galvanized coating for fabric, ties, and connecting wire shall not be at least 0.8 oz/ft2 when tested per ASTM A 90.

   PVC coating for fabric, ties, and connecting wires shall exhibit no weight loss when tested per MSMT 508. Color shall meet Federal Standard 595, gray color No. 26440 or green color No. 24533, and match throughout the project.
5. Recycled Plastic Lumber: shall meet ASTM D6662-13.
6. Acrylic Sheeting: Cyro Industries ACRYLITE® DP-9, translucent or transparent, or approved equal.
7. PVC Sheeting: PVC Type 1, Gray
8. Polyurethane Foam: Dow Chemical Company ENERFOAM™ Professional Foam Sealant or approved equal.

(C) CONSTRUCTION REQUIREMENT

Construction shall be as follows:

1. Prepare rain garden or permeable pavement areas in accordance with the construction plans and specifications.
2. Stone Check Dam: Place class 1 geotextile on prepared subgrade. Construct the check dam with washed #2 stone or river rock with side slopes of 1:1 and a minimum top width of 6 inches. Place the stone so that it completely covers the width of the rain garden area and sides per the detail on the drawings. Form the weir so that top of the outlet crest is approximately 4 inches lower than the outer edges.
3. Gabion Check Dam: Place class 1 geotextile on the prepared subgrade. Overlap adjacent strips at least 12 inches. Replace or repair geotextile damaged during placement of the wire baskets.

   Set the empty units on the geotextile and bind the vertical ends together with wire ties or interlocking fasteners spaced to permit stretching of the units to remove kinks. Use stretching methods that do not damage the baskets. Use stakes, pins, or other approved methods to ensure proper alignment.

   Carefully fill the basket units with stone placed by hand or machine to ensure good alignment with a minimum of voids between stones. Avoid bulging of the mesh. Do not drop the stone from a height greater than 36 in. Place the stone to provide a minimum of two courses. Place the top layer of stone to a uniform surface. Avoid any bulging of the lid mesh. After a basket unit is filled, bend the lid over until it meets the ends of the unit. Secure the lid to the sides and ends with wire ties or interlocking fasteners. When a complete basket unit cannot be installed because of space limitations, cut the basket unit to fit as directed.
4. Concrete Dam: Construct following in accordance with the requirements of Green Book Standard Specifications Section 201-1.1.2 “Concrete Specified by Class and Alternate Class “or as specified in the Contract Documents or directed by the Engineer.
5. Acrylic or PVC Sheeting: Place in accordance with Contract Documents.
6. Set the height for the weir crest per details in the construction drawings.

(D) MEASURE AND PAYMENT

The unit of measure and payment for stone check dam will be made per cubic yard and include installation, setting, and leveling of stone and all labor, materials, tools, equipment and incidentals needed to complete work specified.

The unit of measure and payment for gabion check dam will be made per cubic yard and include installation, setting, and all labor, materials, tools, equipment and incidentals needed to complete work specified.

The unit of measure and payment for concrete check dam will be made per cubic yard and include installation, setting, reinforcement, and all labor, materials, tools, equipment and

incidentals needed to complete work specified.

The unit of measure and payment for acrylic or PVC sheet check dams will be made per square yard and include installation, setting, and all labor, materials, tools, equipment and incidentals needed to complete work specified.

The unit of measure and payment for recycled lumber check dam will be made per square foot for the thickness specified in the plans, and include installation, setting, and all labor, materials, tools, equipment and incidentals needed to complete work specified.

Geotextiles will be measured and paid for separately.

TREE SPACE GRATE CATCH BASIN

(A) DESCRIPTION

This work shall consist of furnishing and placing sidewalk catch basins in tree space with structural soil, as shown in the contract documents, or as directed by the Engineer. Except as herein stated, the requirements specified for Green Book Standard Specifications Sections 206-3.3 “Manufacturing and Finishing” and 800 “Landscaping and Irrigation”, are applicable to this specification.

(B) MATERIALS

1. Concrete for Catch Basin: per Green Book Standard Specifications Section 201-1.1.2 “Concrete Specified by Class and Alternate Class”
2. Catch Basin Grate: ADA compliant using Cast Iron, Ductile Iron, or High Density Polyethylene as shown on the plans.
3. Geotextile Catch Basin Insert: Removable round geotextile bag supported by a galvanized metal cage, sediment basket, or approved equivalent installed in accordance with manufacturer’s specifications.

(C) CONSTRUCTION REQUIREMENT

Provide sidewalk catch basin placed on aggregate stone in covered tree space areas as indicated in the Drawings. As specified in plans, provide removable geosynthetic bag catch basin insert for collection and removal of silt, debris and trash. Connect basin to distribution piping using the appropriate reducer fittings, tees, and/or elbows.

(D) MEASURE AND PAYMENT

The unit of measure Tree Space Grate Catch Basin will be each. Payment for Tree Space Grate Catch Basin will be made at the Contract unit price per each which will include excavation, shoring, backfill, compaction, installation of structure and stone base including connections, gaskets, grate, geotextile catch basin insert (when specified), and all labor, materials, tools, equipment and incidentals needed to complete work specified.

This page is intentionally left blank