FEBRUARY 18, 2016

TO: UNIFIED DISASTER COUNCIL (UDC)

FROM: UNIFIED DISASTER COUNCIL GIS ADVISORY COMMITTEE

SUBJECT: FUTURE REGIONAL PUBLIC SAFETY GEODATBASE SUPPORT SERVICES/STAFFING

BACKGROUND:
At the March 11, 2014 Unified Disaster Council (UDC) meeting, the members reviewed the San Diego Regional Public Safety Geodatbase – Unified Disaster Council Ad-hoc Project to Program Recommendations Report. After review and discussion of the recommendations, the UDC members voted to accept the role of the governing body for the Regional Public Safety Geodatabase.

One of the recommendations in the report included the creation of a UDC GIS Advisory Committee. The primary purpose of this committee is to review the program and make recommendations to the full membership. The UDC GIS Advisory Committee has been established and meeting continuously since August 2014.

The committee is currently comprised of the following representatives

Fire Operations: Chief Jim Geering, Chula Vista Fire
Fire Comms: Diane McClarty, Director, Heartland Fire Communications
Law Enforcement Operations: Chief Lamine Secka, SDSU Police
Law Enforcement Comms: Jeff Hebert, Comms Manager, SDSO
Emergency Management: Stephen Rea, Asistant Director, County OES

One of the key elements in the report was the future support services or staffing for the program. The current contract consultant services (LR Kimball) will reach the end of their five year contract on November 16, 2016 The UDC GIS Advisory Committee has been reviewing the options for future staffing and support services.

Based on discussion by the UDC Advisory Committee and the role of the UDC as a regional body, the focus on support services has focused on two key positions. They are the GIS Program Manager and the GIS System Administrator. Additional support positions would be hosted by specific agencies or disciplines.

Several options for providing support services or staffing have been explored. They include:

1. Contract services between the UDC and SanGIS – After discussion and analysis of grant requirements for procurement, it was determined that contract staffing support services would likely require a competitive bid process. SanGIS is interested in a cooperative effort and may be interested in providing some level of contract support services, but not staffing.

2. Agency supported staffing – This option would require a local agency to hire staff as an employee to support the program.

3. Request for proposals – This option would require an agency to host a procurement and contracting process for services.

STATUS UPDATE:
Option 1 for targeted GIS services with SanGIS will continue to be explored where possible.

Options 2 and 3 continue to be explored with the stakeholders in the program. The goal is to identify an agency that can support one of these options. Given the length of time needed to complete a request for proposals or a hiring process, this decision is time sensitive in order to avoid a gap in support services.

As additional information becomes available on these options, an updated report will be provided.

San Diego Regional Public Safety Geodatabase

Unified Disaster Council Ad-hoc Project to Program Recommendations Report

3/11/2014

Advisory Committee

The RPSG project is currently managed by a project manager that works with a GIS Steering Committee. This steering committee is an informal governance structure that was created to assist with regional consensus building and project decisions. Because the primary stakeholders thus far have been the fire service, the committee was structured utilizing the four fire zones in the region. Each fire zone provides a representative from fire operations, GIS technical and a communications center. This created a committee of 12 representatives to steer the project. As a UASI funded project, the project manager reports to the RTP, this in turn serves an advisory role to the Urban Area Working Group, Unified Disaster Council and the SANDAG Public Safety Group.

Going forward, a multidisciplinary advisory committee should be created to advise the UDC on policy and funding issues. It is recommended that the advisory committee be composed of subject matter experts that would represent the key stakeholders. The recommended representation of the committee is:

- Law Enforcement Communications Centers (1 representatives)
- Fire Communications Centers (1 representatives)
- Law Enforcement Operations Command Staff (1 representative)
- Fire Service Operations Command Staff (1 representative)
- Emergency Managers Group (1 representative)

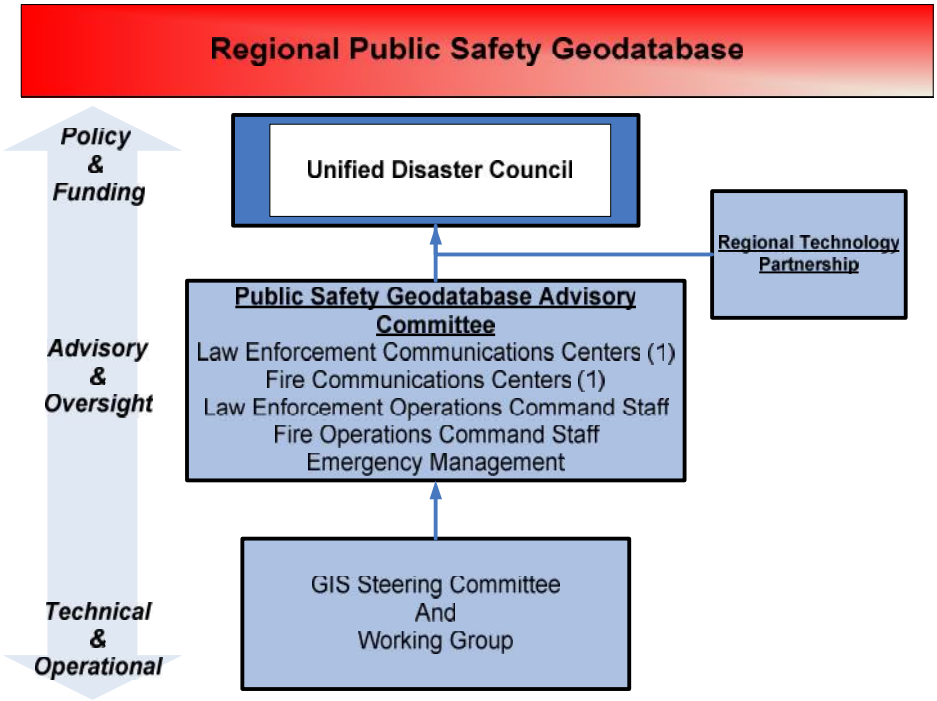

These positions could be filled through a couple of options. Option one would ask the UDC membership to provide representatives in each of the areas. Option two would involve asking the local fire and law enforcement associations to provide representatives. For example, the County Fire Chiefs Association could provide representation utilizing their communications or operations sections. Likewise, the Police and Sheriff Association could provide representatives through their sections.

The RTP would continue to serve in the role of vetting grant investment justifications regarding the RPSG. Those recommendations would continue to be provided to the UDC and the UAWG. Additionally, the RTP would continue to receive updates on the project.

Steering Committee and Working Group

The current steering committee and working group play an important role at the technical and operational level. It is at this level that key consensus building occurs to develop regional standards for the data. The current participation has primarily involved fire service representation. The objective to diversify the participation to law enforcement and emergency management will require additional discussion on what the most effective structure for consensus building would look like. The key to any proposed structure is to allow input and representation from the key stakeholders without creating a structure that is too large or cumbersome for allowing forward progress. It is recommended that the RPSG Advisory Committee provide direction on the make-up of the steering committee and working group.

Role of City of San Diego

The RPSG project has been primarily funded by the UASI grant program. The City of San Diego through their Office of Homeland Security is the lead for the region for this grant. In this role, the City of San Diego has provided the project management through a contract with LR Kimball and supported the sub-recipients in the region who have helped move this project along. Assuming that some level of grant funding will continue to be provided program management and staffing, the UDC will need to work closely with the City of San Diego to provide funding and program support through contractual agreements.

Current Project Effort

Currently the project is supported with 18 full time equivalent positions. These positions are primarily filled through contractual services with a variety of agencies. Each sub-recipient of grant funding has identified an approach that works for them. That includes using an approved vendor like Lynx Technologies, LR Kimball consulting services, hiring limited term GIS coordinators, interns or hiring limited term employees.

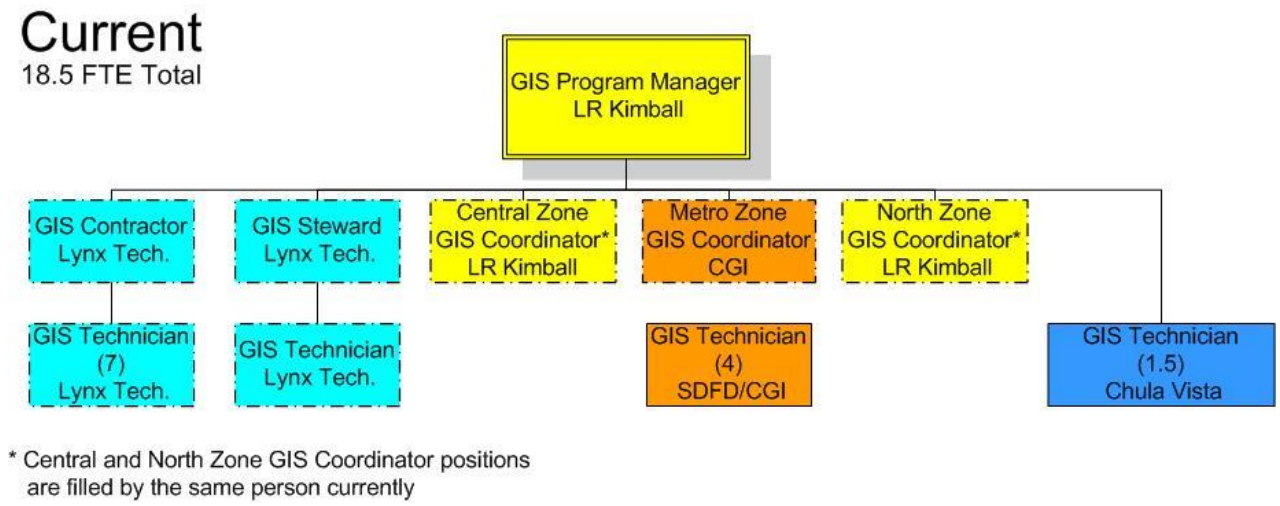

In order to meet the project objectives, the region will need to continue to provide significant staffing levels. The key remaining objectives include;

- Develop Cloud Services that will allow for web based distribution
- Develop web based services that can integrate with decision support systems such as:
    - WebEOC
    - SD LAW
    - ARJIS
    - Next Generation Incident Command
    - CAD Systems
    - Digital Sandbox
- Develop map viewers that will support:
    - Community Emergency Information Systems
    - Regional Resource Inventory
    - Target hazard plans
    - Wildland Urban Interface Fire Emergency Response Plans
    - Live Integrated Network Surveillance System
- Integrate with the Department of Environmental Health Hazardous Materials Program
- Complete an additional 3000 high priority target hazard plans
- Complete 100 high priority wildland urban interface fire emergency response plans
- Identify impacts of implementing Next Generation 911 systems
- Integrate with records management system
- Enhance the system security policies and procedures.
- Integrate law enforcement and emergency management needs into the system

At the current level of staffing, it will likely take several years to meet the stated objectives. The current organization of the program loosely follows a geographic approach using the fire zones. The current effort does not commit staff to the law enforcement and emergency management coordination role. Given the interest in broadening the impact of GIS, diversifying the project support in law enforcement and emergency management will be important.

It is anticipated that the project will need the current staffing level for the next 12-24 months to meet the project objectives. During this time period, the project should seek opportunities to diversify the participation to include law enforcement and emergency management. This organization structure would allow for an ongoing aggressive effort to meet the project objectives. Future grant funding request should consider the following organizational chart in developing investment justifications.

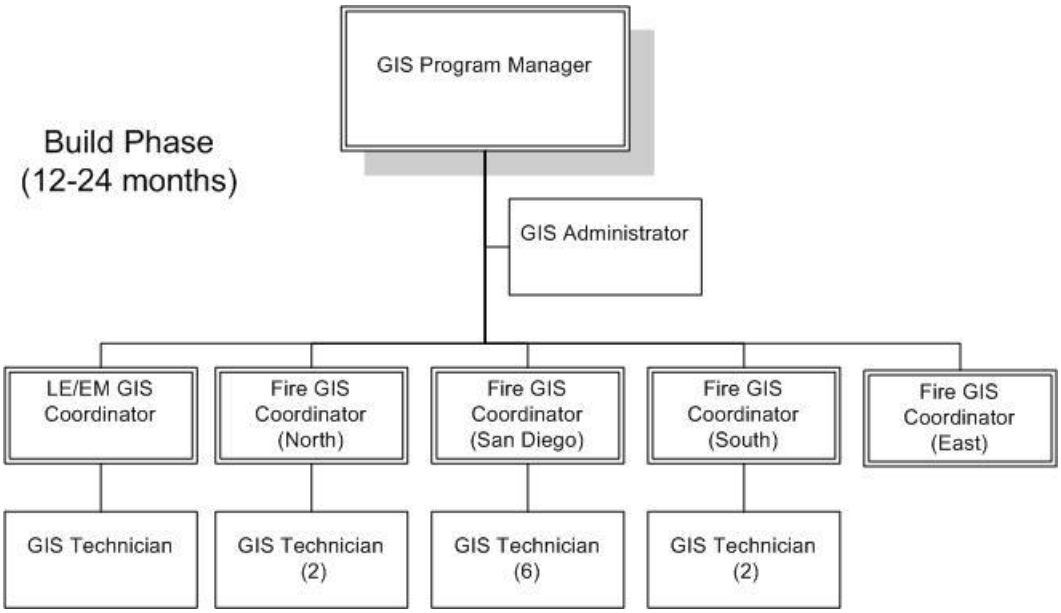

Most of these positions are currently funded and filled through the UASI grant. Many of those positions are provided through contractor support. The two main contractors have contracts that are available through 2016.

For those positions not currently filled, an investment justification for the FY14 UASI grant should be developed that reflects the proposed regional structure in the above charts.

Role of Unified Disaster Council

The core question in the future will be what role the UDC should fill in the staffing the RPSG. . At a minimum, it would seem to make sense that the regional responsibilities should be coordinated through the UDC.

Given the regional nature of the RCIP project, it would seem to be logical that the UDC work with the County Office of Emergency Services to determine the best method for providing ongoing program support. The cost associated with that role includes personnel cost, capital equipment costs and administrative costs. Providing this service through a regional approach would offer a cost effective method for the region.

An example of a regional approach to a program structure is shown below. This structure allows for an overall GIS Program Management, GIS System Administration and support for the three primary disciplines, law, fire and emergency managers.

Example One

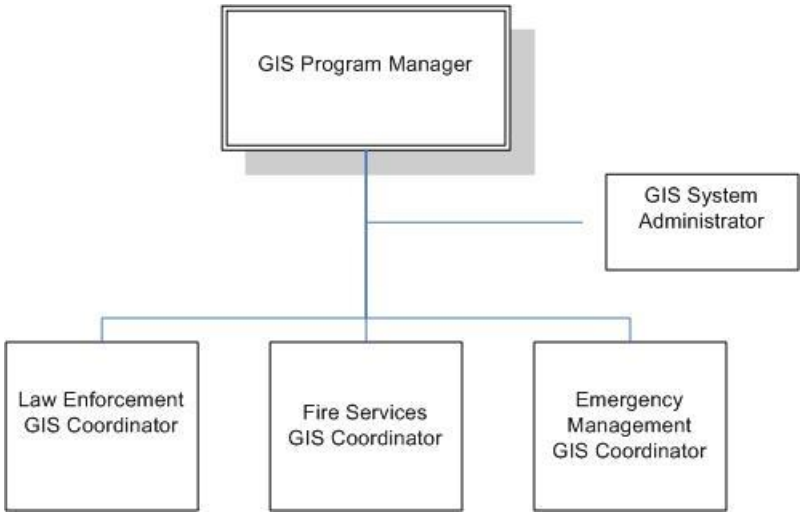

In this model, the primary responsibilities for each position would include.

GIS Program Manager

- Provide strategic leadership.
- Support financial and grant management requirements.
- Report to the UDC Public Safety Geodatabase Committee.
- Develop agendas and keep minutes for the UDC Public Safety Geodatabase Committee.
- Coordinate efforts between fire, law and emergency managers.
- Collaborate with regional stakeholders and other agencies on regional GIS projects.
- Lead and manage multi-discipline working group meetings.
- Provide program updates to the RTP and others as needed.

GIS Administrator

- Manage the public safety geodatabase software.
- Manage the hardware that supports the system.
- Manage the user's access to the data.

- Enforce data integrity requirements.
- Provide agencies with technical support.
- Develop and manage web mapping services and applications.

Fire Services GIS Coordinator

- Coordinate and support the GIS efforts between the fire communications centers.
- Coordinate and support the GIS efforts for the regions fire service agencies.
- Perform quality control checks on the data.
- Lead and manage fire based working groups
- Manage regional collection of public safety geodatabase data.

Law Enforcement GIS Coordinator

- Coordinate and support the GIS efforts between the law enforcement communications centers
- Coordinate and support the GIS efforts for the regions law enforcement agencies
- Perform quality control checks on the data
- Lead and manage law enforcement based working groups
- Manage regional collection of public safety geodatabase data.

Emergency Management GIS Coordinator

- Coordinate and support the GIS efforts between for the emergency managers group
- Coordinate and support the GIS efforts for the regions emergency managers
- Perform quality control checks on the data
- Lead and manage emergency managers based working groups
- Manage regional collection of public safety geodatabase data.

At this level of staffing, the region would receive support to continue the development, collection and maintenance of data. The key areas that would receive support include:

1. Target Hazard Plans – maintain current plans and continue to develop new plans.
2. Regional Map Book – maintain the map book for the region to make sure stakeholders have access to the most current data.
3. Map Viewers – continue to develop and maintain map viewers in support of the various stakeholders.
4. Hazardous Materials Business Plans – maintain the GIS database based on Department of Environmental Health updates that allow first responders the most current information through a map viewer.
5. Computer Aided Dispatch Mapping – maintain updates for all CAD users on data such as addressing, street centerlines and jurisdictional boundaries.
6. Next Generation 911 – support the requirements for address verification and emergency call routing through GIS layers.
7. Regional Resource Inventory Data – maintain the database that provides an inventory and map viewer of NIMS typed regional resources.

8. Web Mapping Services – continue to maintain a set of mapping services that can share data with other incident management and decision support systems.
9. Wildland Urban Interface Fire Emergency Response Plans – maintain current plans in the database and continue to add new plans to the database. .
10. Aerial Imagery – continue to support the provision of aerial imagery for the region.
11. System security – maintain the policies and procedures for providing system and data security.
12. Public Safety Geodatabase – maintain the regional database server and cloud services.

Additional information is provided in the strategic goals and objectives. (Attachment "A")

As an alternative approach, the UDC would only manage the very basic level of regional support. This level of support would only provide a staffing level for basic regional coordination and the basic system administration to keep the system functioning. It would provide minimal data development opportunities. It would depend on agencies in the region to provide the necessary staffing for data development.

Example Two

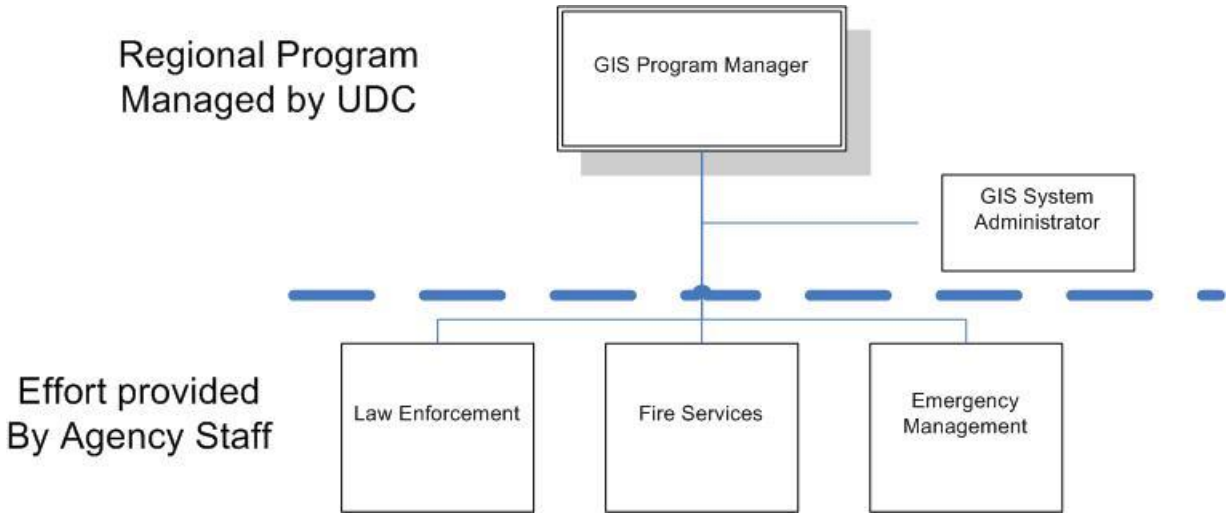

The key responsibilities for the GIS Program Manager and System Administrator would remain the same. This model would rely on the agencies utilizing existing agency staff to provide effort to coordinate, collaborate and maintain the GIS data.

Program Cost

The program cost under the UDC would be a combination of personnel cost, administrative support, software, capital replacement, connectivity and cloud services.

Personnel Cost

The estimated personnel cost for the staffing level in the "**Example One**" organizational chart would be:

Position	Projected Cost (Annual)	Regional/ Sub-Regional	Required Resources	Total Projected Cost (Annual)
GIS Program Manager	$200,000	Regional	1	$200,000
GIS Administrator	$150,000	Regional	1	$150,000
GIS Coordinator	$150,000	Regional	3	$450,000
		Total:	**5**	**$800,000**

In "**Example Two**", the very basic level of staffing has an estimated cost of:

Position	Projected Cost (Annual)	Regional/ Sub-Regional	Required Resources	Total Projected Cost (Annual)
GIS Program Manager	$200,000	Regional	1	$200,000
GIS Administrator	$150,000	Regional	1	$150,000
		Total:	**2**	**$350,000**

Administrative Support

Currently, management and administrative support is provided through a combination of the project manager, the City of San Diego OHS, City of Vista through their contract with Lynx Technologies and individual agencies that utilize employees. The funding for this support is currently allocated through 2014. If additional grant funding is not allocated for the support function in 2015, the UDC may need to ask the County of San Diego to provide cost information for County staff to support that role. The exact cost for this type of support has not yet been determined.

Capital Equipment Replacement

It is assumed that any hardware and equipment that is currently owned by individual agencies will continue to be maintained and replaced by those individual agencies. There are however some centralized servers and software in the system that serve a regional purpose. It would seem to make sense that those portions of the system would be replaced with funding from the entire region.

It is anticipated that this should result in the replacement of a medium Windows Server every 4 to 6 years. The estimated cost for server replacement is $25,000.