HEALTH DEPT. NO.: _____

FIRE PROTECTION PLAN MAP
COUNTY OF SAN DIEGO TRACT 5553

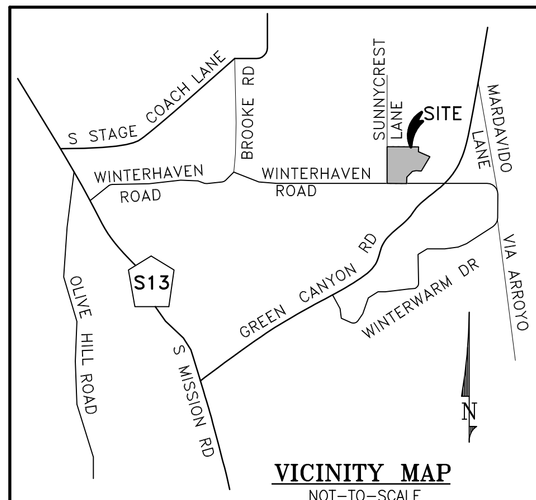

VICINITY MAP
NOT-TO-SCALE
THOMAS BROTHERS GUIDE PAGE: 1028, A-7

"Winterhaven FPP"
Fuel Protection Plan Map

LEGEND

- Individual lot owner maintained Zone A "Survivable Space" from all sides of the structure out 50 feet or to the lot line, which ever comes first.
- Individual lot owner maintained Zone B Fuel Treatment from the outer edge of Zone A, out to the Lot line. Sixteen feet of maintained Zone B Fuel Treatment is also required on each side of each road, as measured out from the edge of the pavement and twenty feet on each side of each driveway.
- 6 foot tall non-combustible block wall located on the North and East sides of Lots 11, 12, and 22.
- Existing Fire Hydrant Locations
- New Fire Hydrant Locations

CERTIFIED BY
David C. Bacon
Dated: 09/25/2012
David C. Bacon, President

FIREWISE 2000, Inc.
26337 Sky Drive
Escondido, CA 92026
Tel: (760)-745-3947

GRAPHIC SCALE
0 50 100 200 400
(IN FEET)
1 inch = 100 ft.

SAN DIEGUITO ENGINEERING, INC
4407 MANCHESTER, SUITE 105
ENCINITAS, CA 92024
PHONE: (760) 753-5525
CIVIL ENGINEERING • PLANNING
LAND SURVEYING

PLOTTABLE EASEMENTS:

PTR #307420924

(3) AN EASEMENT FOR RIGHT OF WAY FOR PUBLIC ROAD AND INCIDENTAL PURPOSES TO THE COUNTY OF SAN DIEGO RECORDED APRIL 8, 1941 IN BOOK 1156 PAGE 259 OF O.R.

(5) AN EASEMENT FOR PIPELINE AND INCIDENTAL PURPOSES TO THE SAN DIEGO GAS AND ELECTRIC COMPANY PER DEED RECORDED JUNE 6, 1960 AS FILE/PAGE NO. 115415 OF O.R.

(7) AN EASEMENT FOR PIPELINE AND INCIDENTAL PURPOSES TO THE SAN DIEGO GAS AND ELECTRIC COMPANY PER DEED RECORDED FEBRUARY 25, 1991 AS DOCUMENT NO. 1991-0080842 OF O.R.

(8) AN EASEMENT FOR ROAD AND INCIDENTAL PURPOSES TO F.W. ROOD AND I.P. ROOD, TRUSTEES UP DATED FEBRUARY 2, 1990 PER DEED RECORDED JULY 6, 1992 AS DOCUMENT NO. 1992-0420095 OF O.R.

(9) AN EASEMENT FOR ROAD AND INCIDENTAL PURPOSES TO SID AND JEAN BERK PER DEED RECORDED JULY 6, 1992 AS DOCUMENT NO. 2001-0771250 OF O.R.

Doug McCormac, 16533 2500 Road, Cedaredge, CO 81413
"Winterhaven" Fire Protection Plan
North County Fire Protection District,
and the
San Diego County Fire Authority
Prepared
By
***FIREWISE* 2000, INC.**
26337 Sky Drive,• Escondido, CA 92026 • Telephone: (760) 745-3947

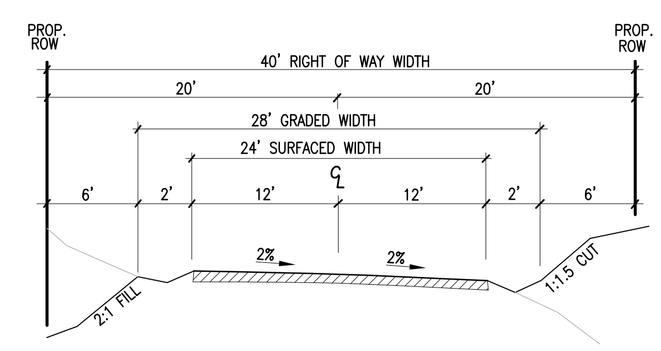

PROPOSED PRIVATE RD. SECTION
NOT-TO-SCALE
NOTE: ACCESS ROAD DESIGN MEETS COUNTY OF SAN DIEGO PRIVATE ROAD DESIGN STANDARD 3.1(c) for AD 100-750.

NOTES:

1. TAX ASSESSOR'S PARCEL NO.: 106-300-41
2. TOPOGRAPHY SOURCE: MORENO AERIAL, DATED: 11-29-07
3. PRELIMINARY EARTHWORK QUANTITES:
   LOTS 1 THRU 22
   CUT = 79,683 CU YD
   FILL = 77,052 CU YD
   EXPORT = 2,631 CU YD

PRELIMINARY GRADING PLAN NOTE:

THIS PLAN IS PROVIDED TO ALLOW FOR FULL AND ADEQUATE DISCRETIONARY REVIEW OF A PROPOSED DEVELOPMENT PROJECT. THE PROPERTY OWNER ACKNOWLEDGES THAT ACCEPTANCE OR APPROVAL OF THIS PLAN DOES NOT CONSTITUTE AN APPROVAL TO PERFORM ANY GRADING SHOWN HEREON, AND AGREES TO OBTAIN VALID GRADING PERMISSIONS BEFORE COMMENCING SUCH ACTIVITY.

ALL GRADING DETAILS WILL BE IN ACCORDANCE WITH SAN DIEGO REGIONAL STANDARD DRAWING D-2, D-35B,AND D-40

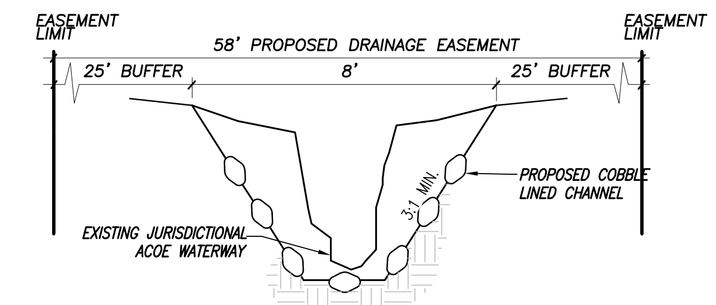

SECTION A-A
CHANNEL SECTION
NOT-TO-SCALE

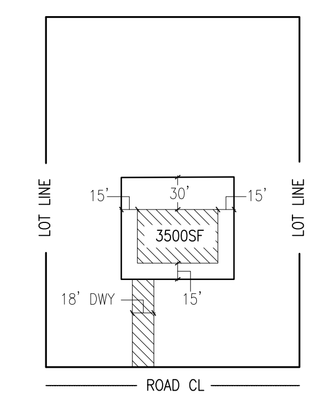

TYPICAL LOT AND DRIVEWAY

EMERGENCY VEHICLE MANEUVERING FEATURES

PER NORTH COUNTY FIRE PROTECTION DISTRICT STANDARDS

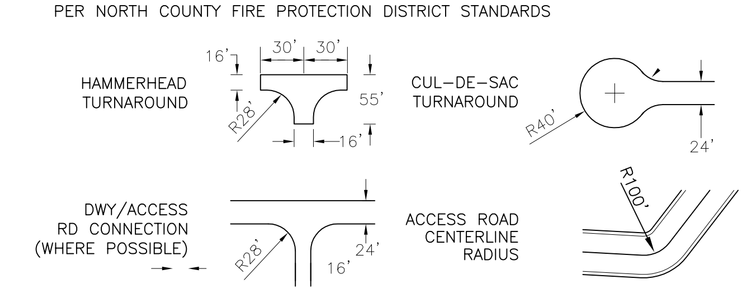

ENGINEER'S NAME: SAN DIEGUITO ENGINEERING
PHONE NO. (760) 753-5525

SHEET 1 OF 1
FILE NO. 5278