Complementary Drainage Study:
Routing of 100-yr Peak Flow using HEC-HMS

HSC Lakeside LLC – Tractor Supply

Prepared for:

Woodcrest Homes, Inc.

March 30, 2015.

Prepared by:

Luis Parra, PhD, CPSWQ, ToR, D.WRE.
R.C.E. 66377

REGISTERED PROFESSIONAL ENGINEER
LUIS A PARRA-ROSALES
No. 66377
Exp. 6-30-2016
CIVIL
STATE OF CALIFORNIA

R·E·C

SDC PDS RCVD 04-01-15
MUP14-015

COMPLEMENTARY DRAINAGE STUDY: HEC-HMS ROUTING OF Q_{100}

TO: Steve Powell
Woodcrest Homes, Inc.

FROM: Luis Parra, PhD, PE, CPSWQ, ToR, D.WRE.

DATE: March 30, 2015.

RE: Determination of the 100-year Mitigated Peak Flow in Post-Development Conditions for HSC Lakeside, LLC – Tractor Supply Company Project, Lakeside, CA using HEC-HMS.

1. INTRODUCTION

This report describes the comparison between the 100-year Return Period Peak flow (Q_{100}) determined in pre-development conditions and post-development conditions, at the two Points of Compliance (POC) of the Tractor Supply Company Project in Lakeside, CA (see Appendix A for Maps).

This study compliments in addition to the Preliminary Drainage Study prepared by Coffey Engineering. Inc. for Lakeside, where pre-development peak flows and unrouted (unmitigated) post-development peak flows were calculated using the San Diego County Hydrology Manual for both Points of Compliance (POC) of the Project. Finally, routed post-development peak flow was obtained using HEC-HMS.

2. PRE DEVELOPMENT AND UNROUTED POST-DEVELOPMENT PEAK FLOWS

Pre-development and unrouted post-development peak flows have already been calculated by Coffey Engineering. Results are shown in Table 1, taken from updated Table A of Coffey study (see Appendix D).

TABLE 1 – SUMMARY OF PRE & UNMITIGATED POST DEVELOPED CONDITIONS

Discharge Location	Condition	Area (Ac)	Runoff Coefficient (C)	T_C (min)	Intensity (in/hr)	Peak Flow (cfs)
POC-1	Pre-Development	4.67	0.41	8.46	5.33	10.26
POC-2	Pre-Development	1.58	0.36	5	7.48	4.28
POC-1	Post-Development	6.13	0.60	9.83	4.84	17.67
POC-2	Post-Development	0.12	0.90	5	7.48	0.78

It is clear from Table 1 that the post-development peak flow (17.67 cfs) being released into POC-1 (existing pipe crossing Olde HWY 80) when no attenuation is included (such as in the calculations of Table A to design the drainage pipes) is larger than the pre-development peak flow (10.26 cfs) when no routing is taken into account.

The routing procedure explained in this report will demonstrate that the peak flow to POC-1 in post-development conditions reduces below the pre-development level.

3. POST-DEVELOPMENT ROUTING

The post-development routing will be take place in the following manner:

1) Time of concentration to each bio-retention, corresponding intensity, C coefficient and contributing area will be used to calculate the peak flows entering into each bio-retention (LID). See Table 2 displaying values from Coffey Study.
2) Time of concentration, 6 hour rainfall, basin area, C coefficient and peak discharge will be given to the RatHydro program approved by the County to obtain a hydrograph entering into each LID (see Appendix B)
3) The RatHydro hydrograph will be given to the USACE HEC-HMS Model. The runoff of each sub-area (DMA-A1, DMA-B1, DMA-C1, DMA-D1, and DMA-E1) is exported directly into HEC-HMS at 1 min interval to insure that it matches exactly the RatHydro hydrograph.
4) HEC-HMS will route the hydrograph at the surface level of each BMP. Initial water elevation will be assumed at the level of the lowest surface invert. Saturation at the gravel and amended soil layers is assumed. To avoid neglecting the flow released by the low flow orifice, the discharge flow by the low flow orifice is assumed constant during the routing process. If this low-flow is neglected, the overall result is a reduction of the total peak flow downstream as this flow reaches the outlet of Basin E via French Drain systems. Therefore, this discharge is considered in all LIDs with amended soil.
5) Runoff **is not** routed into the bio-retention portion of each facility, only routed at the surface portion of each facility. The surface portion includes the surface characteristics of the LID (weirs and orifices at surface level plus volume vs. elevation at surface level). The only consideration regarding the bio-retention portion is the constant release of water via the low-flow orifice. As this discharge is smaller than the incoming peak flows, the soil and gravel remains saturated through the routing process and therefore the LID characteristics are not needed.
6) The total routed runoff is combined into a diversion structure (Div-B-u, Div-C-u and Div-D-u for LIDs B C and D respectively) or is simply combined into a discharge point (Div_A for LID A). The diversion structures B, C and D separate the total routed runoff into runoff being detained in the underground facility and runoff being diverted to the downstream detention Basin E. LID-A cannot discharge into the underground pipe because of topographic constrains and will discharge all runoff directly into detention basin E.
7) The combined diverted runoff into the underground facility (see HEC-HMS schematics in Appendix A) is routed into the underground pipe and is discharged into the detention facility E.
8) The routed hydrograph from the underground system plus the routed hydrograph from LID-A, plus the runoff from off-site areas (X.2+D.1+D.2+D.3 represented by S-LID-E in HEC-HMS), plus the portion of the runoff from LIDs B, C and D not routed into the underground system are all routed in Basin E and the discharged hydrograph is the resulting hydrograph to be discharged at POC-1.

TABLE 2 – INFORMATION TO ROUTE RAT-HYDRO (Table A Coffey Study, see Appendix D)

IMP	Sub-areas	A (acres)	Tc (min)	I (in/hr)	C	Q (cfs)
LID A+F	B.1 + B.2 + B.3 + B.4	0.97	5.00	7.48	0.54	3.94
LID B	A.3 + A.4 + A.5	0.94	8.37	5.37	0.67	3.35
LID C	X.1+A.1+A.2+C.2	1.56	6.02	6.64	0.57	5.90
LID D	C.1	0.34	5.03	7.45	0.86	2.17
Basin E	D.1 + D.2 + D.3 + X.2	2.32	8.75	5.22	0.57	6.88

The schematic representation of the HEC-HMS model is shown in Figure 1.

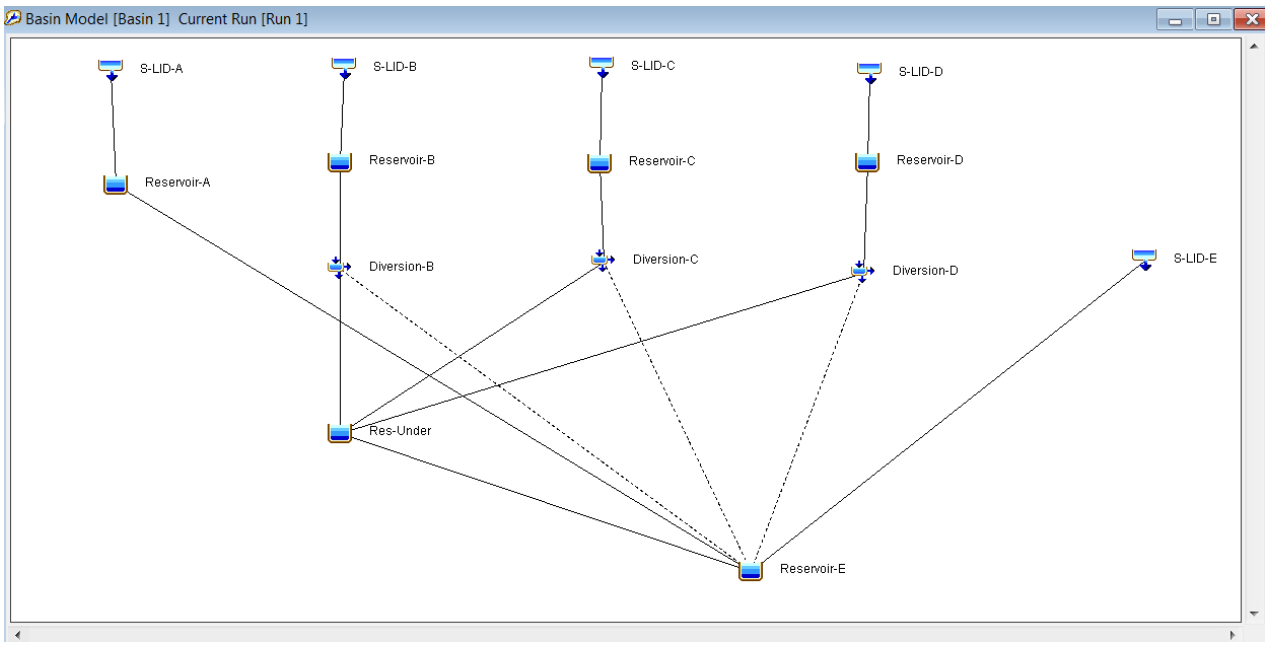

Figure 1. HEC-HMS representation of the routing process.

3.1 Routing Details – Surface of LIDs

The first routing occurs at the LID surface level. Appendix A shows the characteristics of each LID in terms of surface pond, and outlet structure discharge at surface level. Appendix A also shows the details related to the outlet structure of each LID. The elevation vs volume vs discharge tables of Appendix C are given to HEC-HMS for modeling purposes. Six (6) of such tables are needed, per Figure 1: Reservoirs A, B, C, D, Under (underground pipe) and E. In addition three (3) diversion tables are prepared.

It should be mentioned that the size of the reservoirs A, B, C, D and E is not large enough for 100-year peak flow mitigation (even if they are large enough for hydromodification purposes per the approved TRWE Hydromodification Study); consequently a diversion structure will be included in LID-B, LID-C and LID-D to further reduce the peak flow of the 100-year synthetic storm event (design event). Discussion of the structures is included in section 3.2. In addition, it should be mentioned that the initial elevation in LIDs A+F, B, C and D is the invert of the lowest surface outlet. At that point, water volume in the facilities is larger than the required water quality volume.

3.2 Considerations of Basin A and Basin F as a single Basin A+F

From the hydrology point of view, Basin A and Basin F are acting as a single basin for the following reasons:

1) The bottom elevation (below the gravel), the bottom surface elevation and the crest elevation is the same
2) At the LID level, both basins are connected by the same French Drain system constrained by a single orifice located in the outlet structure of Basin F (see details an Appendix A)
3) At surface level, both basins are connected by 4 horizontal 8" pipes, with invert equal to the surface bottom. If one sub-basin fills faster than the other, the pipes will act as a surface equalizer.

For the modeling point of view the surface volume was calculated with the total area of both sub-basins at surface level. As there is only one normal discharge (outlet structure located in sub-basin F), there is only one (1) elevation – volume – discharge curve in HEC-HMS.

3.3 Diversion Structures – LIDs and Routing into Underground Facility

The bio-retention facilities B, C and D now include a diversion structure (See Appendix A for plans and Appendix C for diversion tables) such that at a low ponding elevation 100% of the flow goes to LID-E. At higher ponding elevations a portion of the flow goes to Basin E while another portion goes to the underground system. The diversion structure was designed such that when the continuous hourly 10 year peak flow arrives at the facility, 100% of the flow goes to Basin E, while when the synthetic 100-year instantaneous peak flow (studied here) arrives to the facilities, more than 50% of the peak flow is diverted to the underground facility for further control. The purpose of the diversion is to insure that the hydromodification analysis already approved for this project does not change (as all flows in the range of hydromodification analysis are never diverted and therefore the underground facility does not affect the determination of the Flow Duration Curve in post-development conditions).

Table 3 displays the difference in peak flows between the continuous 10-year hourly peak, and the routed instantaneous synthetic 100-year peak flow so it is clear that the diversion structure does not affect the former but splits the later. Distribution of flow tables (peak flow diversion tables) are included in Appendix C, from the outlet tables and discharge equations of the same appendix.

TABLE 3 – PEAK COMPARISON – Q_{10} Hydromodification & Q_{100} SDCHM

				DIVERSION OF Q_{100}	
LID	**Q_{10}-continuous, hourly**	**Q_{100} - SDCHM**	**Q_{100} - Routed**	**Q_{100} - Basin E**	**Q_{100} – Underground pipe**
B	0.40	3.35	3.17	0.86	2.31
C	0.68	5.90	3.14	0.92	2.22
D	0.17	2.17	1.97	0.425	1.545

3.3 Routing into Basin E

All routed hydrographs are combined into Basin E, and routed through the outlet structure there. The peak flow discharging out of Basin E corresponds to the post-development peak flow for POC-1.

4. RESULTS

Per the one-minute time interval routed hydrograph obtained from HEC-HMS, the post-development peak flow to POC-1 is 10.01 cfs, smaller than the pre-development peak flow of 10.26 cfs, under the occurrence of the 100-year storm event as defined by the SDCHM. Results are summarized in Table 4.

TABLE 4 – SUMMARY OF PRE & UNMITIGATED POST DEVELOPED CONDITIONS

Discharge Location	Condition	Area (Ac)	Runoff Coefficient (C)	T_C (min)	Intensity (in/hr)	Peak Flow (cfs)
POC-1	Pre-Development	4.67	0.41	8.46	5.33	10.26
POC-2	Pre-Development	1.58	0.36	5	7.48	4.28
POC-1	Post-Development, unmitigated	6.13	0.60	9.83	4.84	17.67
POC-1	Post-development, mitigated	6.13	0.60	-	-	**10.01**
POC-2	Post-Development	0.12	0.90	5	7.48	0.78

5. EMERGENCY DISCHARGE CONSIDERATIONS

This section discusses briefly the emergency discharge of all basins for the un-routed peak flows. The unrouted peak flows (total Q_{100} peak flows) for each basin are included in Table 5. The discharge elevation corresponds to the elevations reached in each basin under the assumption of no attenuation.

TABLE 5 – EMERGENCY CONDITIONS

IMP	Q_u(1) (cfs)	Elevation(2)	Max Elevation for Q_u Discharge	C : Crest Elevation	Q(1) (cfs)	Z : Elev to discharge Q	Free board: C - Z
LID A+F	3.94	1.42 (686.92)	686.50 & 686.92(3)	688.00	1.22	0.68 (686.18)	1.82
LID B	3.35	0.31 (703.31)	N/A	704.00(6)	3.17	0.30 (703.30)	0.70
LID C	5.90	1.87 (698.37)	698.50(4)	699.00	3.14	1.53 (698.03)	0.97
LID D	2.17	0.35 (700.85)	N/A	701.63(7)	1.97	0.33 (700.83)	0.80
Basin E	17.67	3.48 (386.73)	687.75(5)	688.00	6.88	3.05 (386.30)	1.70

NOTES
(1): Qu = non-attenuated discharge; Q = discharge after routing.
(2): Surface elevation for discharge, measured from invert of lowest outlet. Elevation does not include low-flow orifice.
(3): 686.50 is the elevation of the lowest inlet connected to the system, constrained by a 12” pipe. 686.92 is the emergency box in sub-basin A
(4): A 15-ft opening in the berm with invert 698.50 is the emergency overflow to the entrance to avoid overtopping of Basin C.
(5): 687.50 is the elevation of the street inlet connected to the system, constrained by a 12” pipe.
(6): No emergency discharge. Water will pond in parking lot and at elevation 704.00 it will overflow through the entrance of the parking lot.
(7):No emergency discharge. System is on-grade and water will flow downstream to LID-C

In terms of emergency discharges, the elevation of the non-attenuated peak flows is calculated with the elevation-volume-discharge tables of Appendix C. In addition, the following discussion explains how flows are released:

1) For the Basin A-F system, the lowest trench connecting to the system has an invert elevation of 686.50. As soon as the water rises above this elevation, some water will be leaving the system through this trench drain. As the connecting pipe is small (6" PVC) the outlet capacity is limited ($Q = 0.25\pi D^2 \cdot (2g/K)^{0.5} \cdot \Delta H^{0.5}$ or about $1.21 \cdot \Delta H^{0.5}$ cfs, with ΔH being water elevation above 686.50), and this outlet will only provide partial release capacity. However, if water reaches above 686.92, an emergency outlet connects Basin A directly with Basin E. It must be pointed out that at this level (686.92), the discharge of the outlet structure of basin E is already equal to the not attenuated peak flow (3.94 cfs) and the discharge through the trench mentioned would be an additional 0.78 cfs, not considered in the routing calculations. Therefore, even a peak of 4.72 cfs can be discharged before any peak flow is released out of sub-basin A through the emergency outlet, which leaves plenty of safety for the A+F system.
2) For Basin B, there is no emergency outlet other than the system built into the outlet structure. However, for the non-attenuated peak flow, the elevation of the discharge is 0.70 ft below the elevation required for spill over the landscape to occur. In any case, water will never pond to the level of the commercial building as it will escape through the entrance or overflowing the curb before flooding reaching the commercial building can occur. It should be pointed out that according to the San Diego County Hydraulic Design Manual (SDCHDM), section 5.3.7, open channel facilities conveying a design flow of less than 10 cfs shall have a minimum freeboard of 0.5 ft, so the 0.70 ft is a satisfactory amount due to the expected 100-year peak flow.
3) For basin C, the elevation of the water over the outlet structure is below the emergency overflow. There is a 15 ft opening in the berm 6 inches below crest elevation as an emergency scenario in case the outlet structure gets partially clogged and is unable to discharge the 100-yr peak flow. Currently the free board of the attenuated peak flow is 0.97 ft. Again, per section 5.3.7 of the SDCHDM, this freeboard is satisfactory (also satisfactory according to section 5.5.5 for swales and grass-lined channels conveying a 100-year flow less than 10 cfs).
4) For basin D, the freeboard over the crest elevation of the lowest point of the curb surrounding the facility is 0.80 ft (see Table 5). Even if flow overflows this small basin, water will keep flowing downstream in the parking lot until it reaches Basin C. Therefore, there is no risk of flooding of the commercial building.
5) For basin E, the maximum elevation of the outlet structure is 3.5 ft, and water needs to be at 3.48 ft of ponding so the outlet structure is able to discharge the attenuated flow. The free board at the maximum elevation of the attenuated flow is 1.70 ft. There are two emergency outlets: at elevation 3.5 ft over the bottom (306.75), the concrete wall surrounding the 24" discharge pipe ends, so the entire perimeter of the outlet structure becomes an overflow discharge. Also, at elevation 4.5 ft over the bottom (307.75), the lowest inlet in the street ceases to introduce water into the system and becomes an additional discharge point.

6. CONCLUSIONS

- The design of (a) the bioretention LID facilities with their corresponding diversion structures, (b) the underground pipe, and (c) detention Basin E on the project site reduces the 100-year post-development peak flow to 10.01 cfs, smaller than the pre-development peak flow of 10.26 cfs for POC-1.
- The post-development discharge to POC-2 has already been reduced below pre-development levels as the contributing area to POC-2 reduced from 1.58 acres to 0.12 acres. No further analysis necessary for this POC.
- The project proponent will be responsible for the maintenance of Basin E, and all on-site facilities.

APPENDIX LIST

Appendix A:

- Pre and Post Development Maps
- Underground System Schematic Plan View
- Diversion Structure Details

Appendix B:

- RatHydro Input and Results

Appendix C:

- Area vs Elevation Tables
- Discharge Tables
- Diversion Tables

Appendix D: Summary Table of Results from Coffey Engineering Study

Appendix E: HEC-HMS Results

Appendix F: Response to Comments prepared by Dpt. of Public Works, Flood Control, 3/19/2015.

REFERENCES

[1] SWMM Modeling for Hydromodification Compliance of HSC Lakeside, LLC – Tractor Supply Company Project, Lakeside, CA. October, 2014, TRW Engineering.

[2] Coffey Engineering Preliminary Drainage Study. Tractor Supply Company, Lakeside, CA. October 24, 2014.

[3] San Diego County Hydrology Manual, June 2003. Available at: http://www.sdcounty.ca.gov/dpw/floodcontrol/hydrologymanual.html

[4] San Diego County Hydraulic Design Manual, September 2014. Available at: http://www.sandiegocounty.gov/content/dam/sdc/dpw/FLOOD_CONTROL/floodcontrolpdf/hydraulic_design_manual_2014.pdf

APPENDIX A:

- Pre and Post Development Maps
- Underground System Schematic Plan View
- Diversion Structure Details

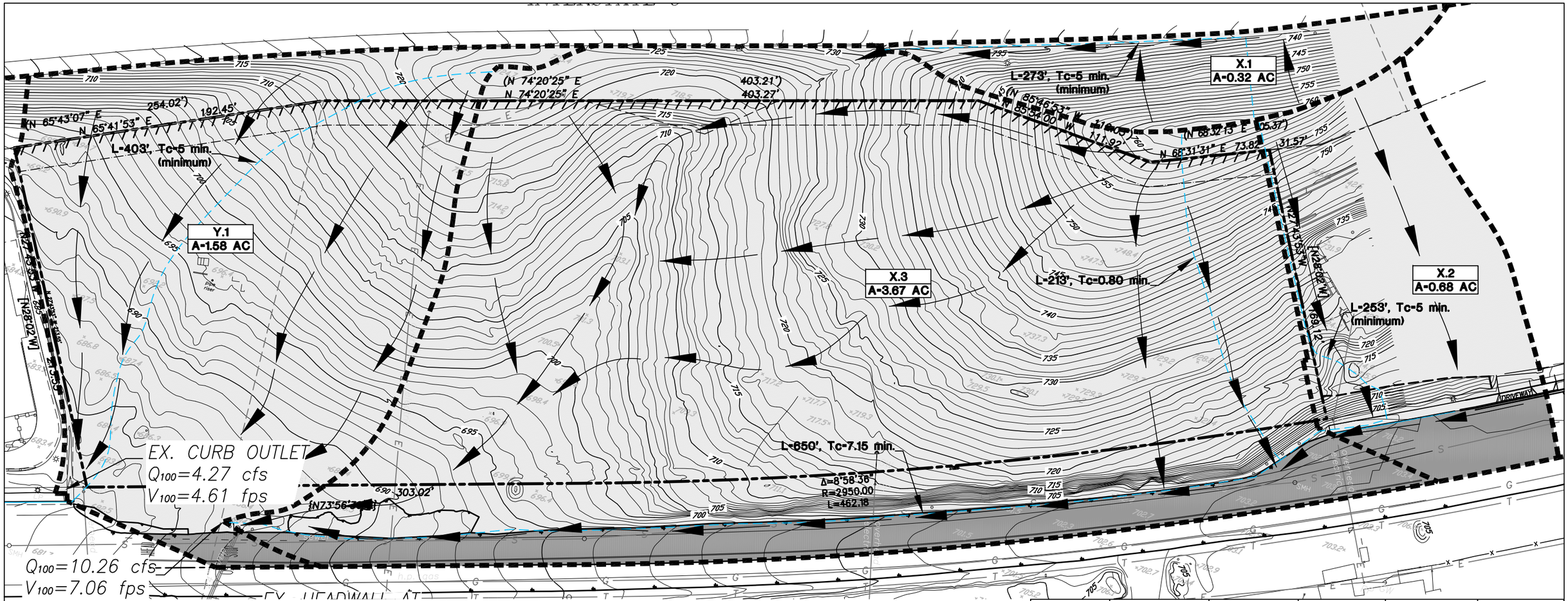

LEGEND

DESCRIPTION	SYMBOL
PROPERTY LINE	
EXISTING CONTOUR	90
PROPOSED CONTOUR	90
PVC DRAIN LINE	
DRAINAGE SWALE OR DIRECTION OF FLOW	
BASIN LIMITS	
FLOW PATH	
IMPERVIOUS AREA	
PERVIOUS AREA	

BASIN ID — A.1

BASIN SIZE — A-1.00 AC

Basin	Impervious Area	Pervious Area	Permeable Paving	Total (SF)	Total (AC)
X.1		14,121.00		14,121.00	0.32
X.2	4,244.00	25,546.00		29,790.00	0.68
X.3	15,805.00	143,907.00		159,712.00	3.67
Y.1	1,294.00	67,617.00		68,911.00	1.58

N

60 0 60 120 180

SCALE: 1"=60'

DRAINAGE MAP 'A.1'
EXISTING DRAINAGE CONDITIONS

COFFEY ENGINEERING, INC.

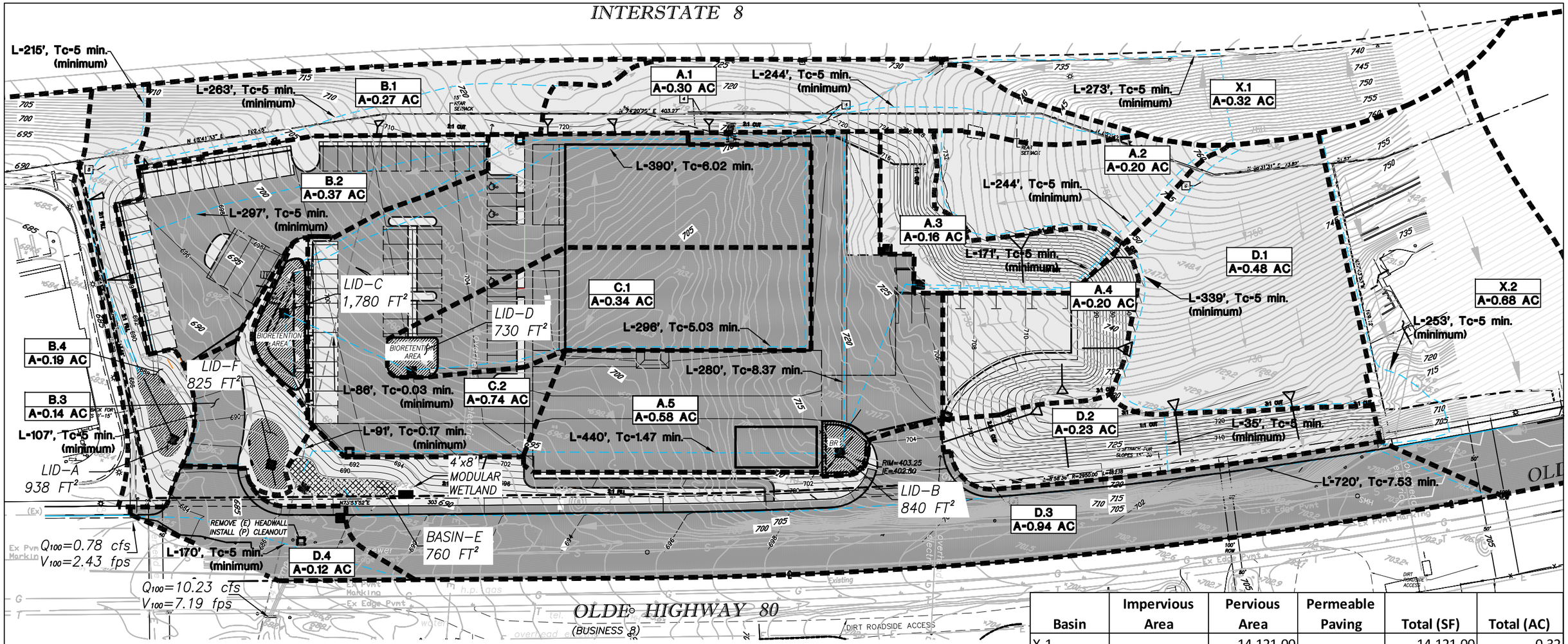

LEGEND

DESCRIPTION	SYMBOL	DESCRIPTION	SYMBOL
PROPERTY LINE		PVC DRAIN LINE	
EXISTING CONTOUR	90	PERFORATED UNDERDRAIN	
PROPOSED CONTOUR	90	BROOKS BOX (OR SIM) W/GRATE	
DRAINAGE SWALE OR DIRECTION OF FLOW		CLEANOUT	
BASIN LIMITS		P.C.C. RIBBON GUTTER	
IMPERVIOUS AREA		FLOW PATH	
PERVIOUS AREA			

BASIN ID → A.1
BASIN SIZE → A-1.00 AC

N

60 0 60 120 180

SCALE: 1"=60'

Basin	Impervious Area	Pervious Area	Permeable Paving	Total (SF)	Total (AC)
X.1		14,121.00		14,121.00	0.32
X.2	4,244.00	25,546.00		29,790.00	0.68
A.1	0.00	13,089.00		13,089.00	0.30
A.2	0.00	8,540.00		8,540.00	0.20
A.3	0.00	6,821.00		6,821.00	0.16
A.4		4,958.00	3,634.00	8,592.00	0.20
A.5	23,064.00	840.00	1,506.00	25,410.00	0.58
B.1	0.00	11,743.00		11,743.00	0.27
B.2	11,412.00	1,806.00	2,833.00	16,051.00	0.37
B.3	3,202.00	2,856.00		6,058.00	0.14
B.4	0.00	8,261.00		8,261.00	0.19
C.1	13,749.00	1,003.00		14,752.00	0.34
C.2	26,954.00	3,803.00	1,680.00	32,437.00	0.74
D.1	0.00	20,751.00		20,751.00	0.48
D.2	0.00	9,882.00		9,882.00	0.23
D.3	33,014.00	7,684.00		40,698.00	0.93
D.4	5,037.00	0.00		5,037.00	0.12

DRAINAGE MAP 'B.1'
PROPOSED DRAINAGE CONDITIONS

COFFEY ENGINEERING, INC.

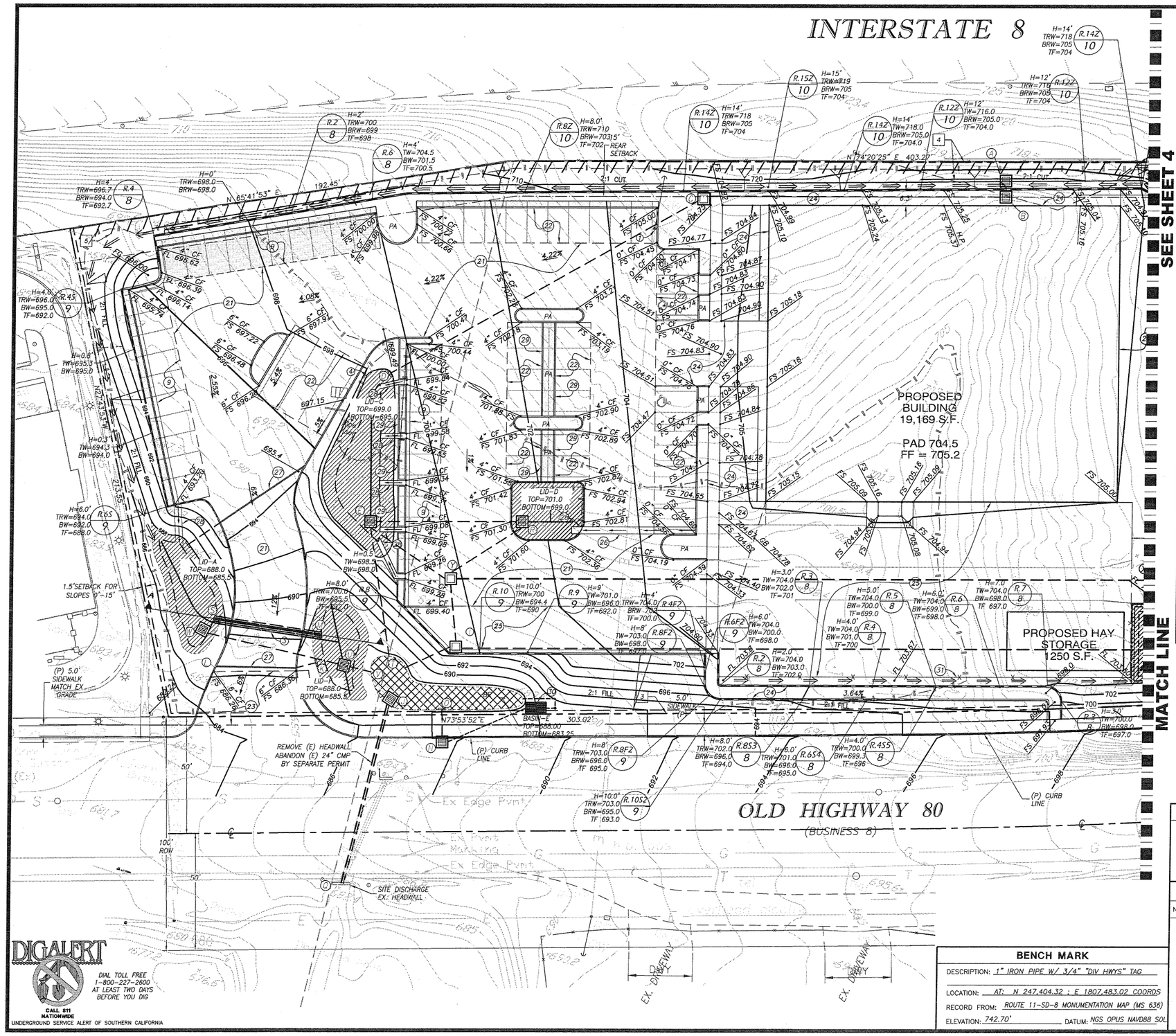

CONSTRUCTION NOTES

1. RELOCATE POWER POLE
3. CONNECT 4" PERFORATED UNDERDRAIN FROM LID 'A' TO PERFORATED UNDERDRAIN OF LID 'F'
4. 6" EARTHEN BERM AT TOP OF LID-C PER DETAIL 'H' SHEET 6. 6" HIGHx15' WIDE SPILLWAY AT LOCATION INDICATED

DRAIN STRUCTURES			
ID	TYPE	RIM	IE
A	24x24 BROOKS INLET	715.00	699.91
B	24x24 BROOKS CLEANOUT	703.80	699.84
C	24x24 BROOKS CLEANOUT	704.40	698.54
D	D-30 HEADWALL	697.00	697.00
E	CONTROL STRUCTURE PER DETAIL C/7	698.17	692.50
F	24x24 BROOKS INLET	705.80	702.95
G	24x24 BROOKS INLET	705.80	702.65
H	CONTROL STRUCTURE PER DETAIL B/7	703.25	698.75
I	36x36 BROOKS CLEANOUT	697.05	690.63
J	CONTROL STRUCTURE PER DETAIL E/7	687.30	683.25
K	D-30 HEADWALL	688.00	687.20
L	TRENCH DRAIN	689.83	687.00
M	D-30 HEADWALL	686.52	685.50
N	D-01 TYPE A CURB INLET	687.67	686.00
O	D-30 HEADWALL	686.00	685.58
Q	EXISTING HEADWALL	686.95	682.40
R	CONTROL STRUCTURE PER DETAIL D /7	700.00	696.50
S	D-30 HEADWALL	687.50	685.50
T	D-30 HEADWALL	688.38	685.81
U	CONTROL STRUCTURE PER DETAIL F/7	687.50	683.37
V	D-30 HEADWALL	687.05	683.25
W	18x18 BROOKS INLET	687.83	685.00
X	60x48 TYPE A CLEANOUT	698.63	693.31
Y	60x60 TYPE A CLEANOUT W/ ORIFICE PLATE PER DET. '1/7'	698.63	691.22

PIPE TABLE			
PIPE	SIZE/TYPE	SLOPE	LENGTH (CENTER TO CENTER)
AB	12" HDPE PIPE	1.02%	6.87
BC	12" HDPE PIPE	1.00%	130.21
CD	12" HDPE PIPE	1.00%	153.74
ET	12" HDPE PIPE	11.24%	59.50
EY	12" HDPE PIPE	2.00%	42.48
FG	12" HDPE PIPE	1.01%	29.61
GH	12" HDPE PIPE	3.40%	114.70
HI	12" HDPE PIPE	2.69%	301.89
HX	12" HDPE PIPE	18.22%	29.86
IT	24" HDPE PIPE	0.44%	27.00
JQ	24" RCP	1.05%	81.15
KL	6" TRENCH DRAIN	0.57%	35.29
NO	18" RCP	3.05%	13.79
RE	12" HDPE PIPE	6.14%	65.16
RY	12" HDPE PIPE	13.55%	38.98
SM	8" PVC PIPE	0.00%	39.73
UV	12" HDPE PIPE	1.00%	12.01
WU	12" HDPE PIPE	0.60%	61.50
XY	48" HDPE PIPE	0.00%	302.83
YI	12" HDPE PIPE	2.00%	29.31

PRELIMINARY

REGISTERED PROFESSIONAL ENGINEER DANIEL J. VAZQUEZ No. 76074 CIVIL STATE OF CALIFORNIA

N

20 0 20 40 60

SCALE: 1"=20'

GRADING PLAN

RECORD PLAN

BY: _____ DATE: _____
NAME
R.C.E. _____
EXPIRES: _____

COUNTY APPROVED CHANGES

NO.	DESCRIPTION:	APPROVED BY:	DATE:

PRIVATE CONTRACT

SHEET	COUNTY OF SAN DIEGO DEPARTMENT OF PUBLIC WORKS	11 SHEETS
3		

GRADING PLAN FOR:
TRACTOR SUPPLY STORE
14140 OLDE HIGHWAY 80
LAKESIDE, CA. 92021

CALIFORNIA COORDINATE INDEX 246-1803

APPROVED FOR MOHAMAD K. ENKHBRIGDENE, COUNTY ENGINEER

ENGINEER OF WORK
R.C.E. 076074

PDS2014-LDGRMJ-00029
GRADING PERMIT NO:

BENCH MARK

DESCRIPTION: 1" IRON PIPE W/ 3/4" "DIV HWYS" TAG
LOCATION: AT: N 247,404.32 ; E 1807,483.02 COORDS
RECORD FROM: ROUTE 11-SD-8 MONUMENTATION MAP (MS 636)
ELEVATION: 742.70' DATUM: NGS OPUS NAVD88 SOL

DIGALERT
DIAL TOLL FREE 1-800-227-2600 AT LEAST TWO DAYS BEFORE YOU DIG
CALL 811 NATIONWIDE
UNDERGROUND SERVICE ALERT OF SOUTHERN CALIFORNIA

COFFEY ENGINEERING, INC.
10660 SCRIPPS RANCH BLVD. SUITE 102, SAN DIEGO, CA 92131 PH (858)831-0111 FAX (858)831-0179

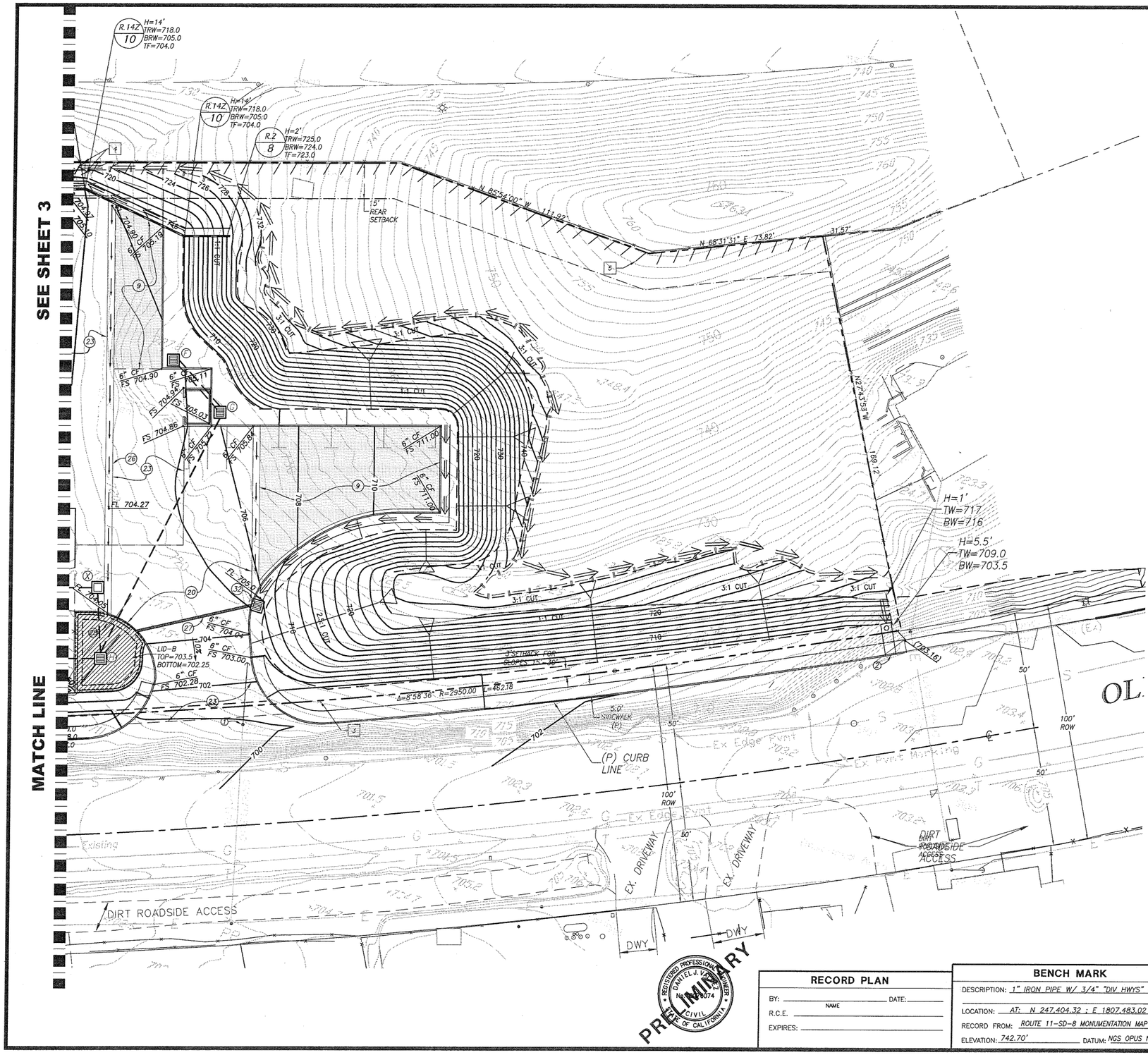

CONSTRUCTION NOTES

1. RELOCATE POWER POLE
2. CONSTRUCT D-25 CURB OUTLET

DRAIN STRUCTURES			
ID	TYPE	RIM	IE
A	24x24 BROOKS INLET	715.00	699.91
B	24x24 BROOKS CLEANOUT	703.80	699.84
C	24x24 BROOKS CLEANOUT	704.40	698.54
D	D-30 HEADWALL	697.00	697.00
E	CONTROL STRUCTURE PER DETAIL C/7	698.17	692.50
F	24x24 BROOKS INLET	705.80	702.95
G	24x24 BROOKS INLET	705.80	702.65
H	CONTROL STRUCTURE PER DETAIL B/7	703.25	698.75
I	36x36 BROOKS CLEANOUT	697.05	690.63
J	CONTROL STRUCTURE PER DETAIL E/7	687.30	683.25
K	D-30 HEADWALL	688.00	687.20
L	TRENCH DRAIN	689.83	687.00
M	D-30 HEADWALL	686.52	685.50
N	D-01 TYPE A CURB INLET	687.67	686.00
O	D-30 HEADWALL	686.00	685.58
Q	EXISTING HEADWALL	686.95	682.40
R	CONTROL STRUCTURE PER DETAIL D /7	700.00	696.50
S	D-30 HEADWALL	687.50	685.50
T	D-30 HEADWALL	688.38	685.81
U	CONTROL STRUCTURE PER DETAIL F/7	687.50	683.37
V	D-30 HEADWALL	687.05	683.25
W	18x18 BROOKS INLET	687.83	685.00
X	60x48 TYPE A CLEANOUT	698.63	693.31
Y	60x60 TYPE A CLEANOUT W/ ORIFICE PLATE PER DET. '1/7'	698.63	691.22

PIPE TABLE			
PIPE	SIZE/TYPE	SLOPE	LENGTH (CENTER TO CENTER)
AB	12" HDPE PIPE	1.02%	6.87
BC	12" HDPE PIPE	1.00%	130.21
CD	12" HDPE PIPE	1.00%	153.74
ET	12" HDPE PIPE	11.24%	59.50
EY	12" HDPE PIPE	2.00%	42.48
FG	12" HDPE PIPE	1.01%	29.61
GH	12" HDPE PIPE	3.40%	114.70
HI	12" HDPE PIPE	2.69%	301.89
HX	12" HDPE PIPE	18.22%	29.86
IT	24" HDPE PIPE	0.44%	27.00
JQ	24" RCP	1.05%	81.15
KL	6" TRENCH DRAIN	0.57%	35.29
NO	18" RCP	3.05%	13.79
RE	12" HDPE PIPE	6.14%	65.16
RY	12" HDPE PIPE	13.55%	38.98
SM	8" PVC PIPE	0.00%	39.73
UV	12" HDPE PIPE	1.00%	12.01
WU	12" HDPE PIPE	0.60%	61.50
XY	48" HDPE PIPE	0.00%	302.83
YI	12" HDPE PIPE	2.00%	29.31

DIGALERT
CALL 811 NATIONWIDE
DIAL TOLL FREE 1-800-227-2600 AT LEAST TWO DAYS BEFORE YOU DIG
UNDERGROUND SERVICE ALERT OF SOUTHERN CALIFORNIA

N

20 0 20 40 60

SCALE: 1"=20'

GRADING PLAN

PRELIMINARY
REGISTERED PROFESSIONAL ENGINEER DANIEL J. VAN DYKE 076074 CIVIL STATE OF CALIFORNIA

RECORD PLAN

BY: _____ DATE: _____
NAME
R.C.E. _____
EXPIRES: _____

BENCH MARK

DESCRIPTION: 1" IRON PIPE W/ 3/4" "DIV HWYS" TAG
LOCATION: AT: N 247,404.32 ; E 1807,483.02 COORDS
RECORD FROM: ROUTE 11-SD-8 MONUMENTATION MAP (MS 636)
ELEVATION: 742.70' DATUM: NGS OPUS NAVD88 SOL

COUNTY APPROVED CHANGES

NO.	DESCRIPTION:	APPROVED BY:	DATE:

PRIVATE CONTRACT

SHEET	COUNTY OF SAN DIEGO DEPARTMENT OF PUBLIC WORKS	11 SHEETS
4		

GRADING PLAN FOR:
TRACTOR SUPPLY STORE
14140 OLDE HIGHWAY 80
LAKESIDE, CA. 92021

CALIFORNIA COORDINATE INDEX 246-1803

APPROVED FOR MOHAMAD K. FAKHRODDINE, COUNTY ENGINEER

ENGINEER OF WORK
R.C.E. 076074

PDS2014-LDGRMJ-00029
GRADING PERMIT NO.

COFFEY ENGINEERING, INC.
10660 SCRIPPS RANCH BLVD. SUITE 102, SAN DIEGO, CA 92131 PH (858)831-0111 FAX (858)831-0179

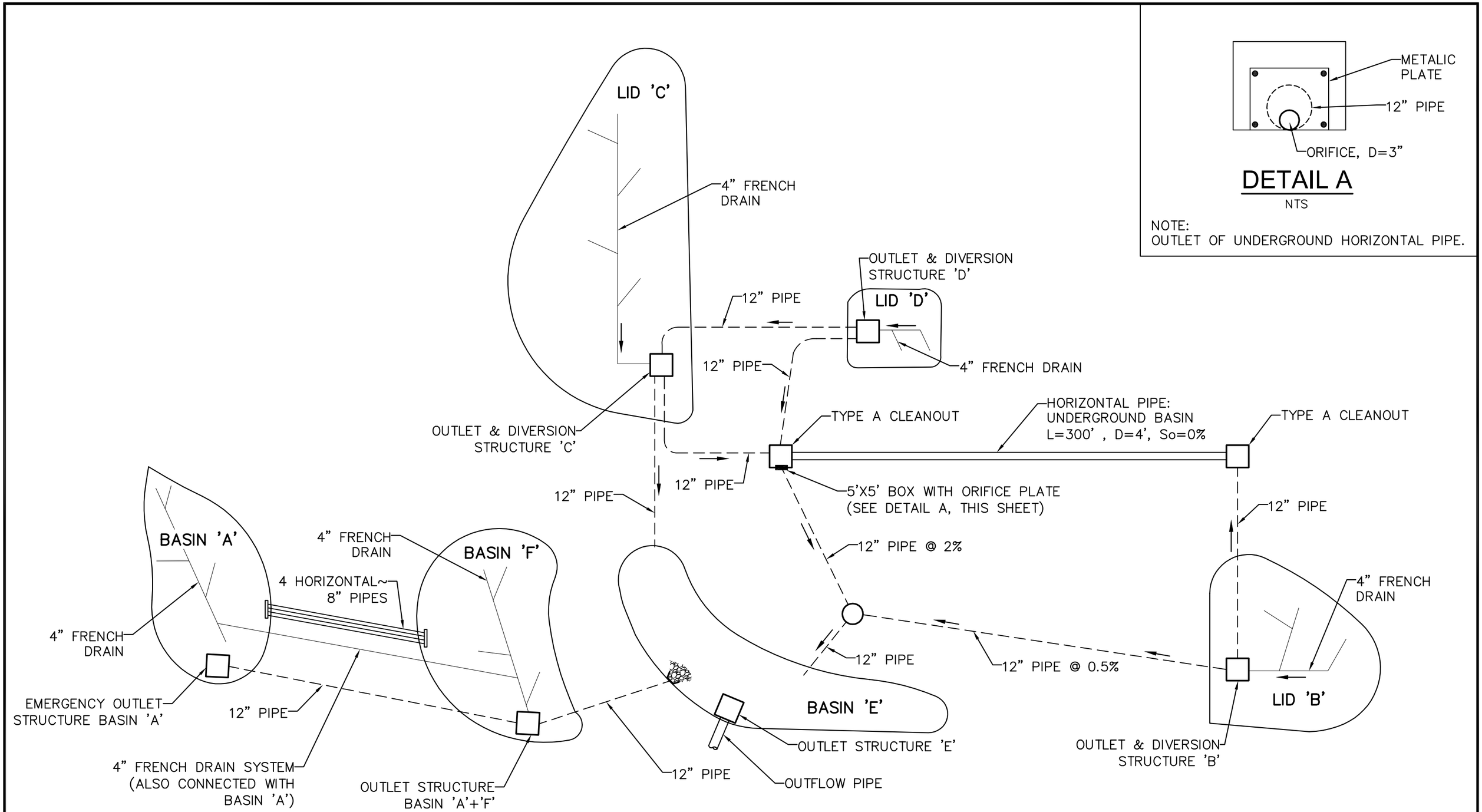

SCHEMATICS FOR NEW UNDERGROUND PIPE
AND DIVERSION STRUCTURES B, C, & D

GENERAL PLAN VIEW MODIFIED PIPE SYSTEM

(INCORPORATION OF 4' UNDERGROUND PIPE)

NTS

R·E·C Consultants, Inc.
Civil Engineering, Environmental
Land Surveying
2442 Second Avenue
San Diego, CA 92101
(619)232-9200 (619)232-9210 Fax

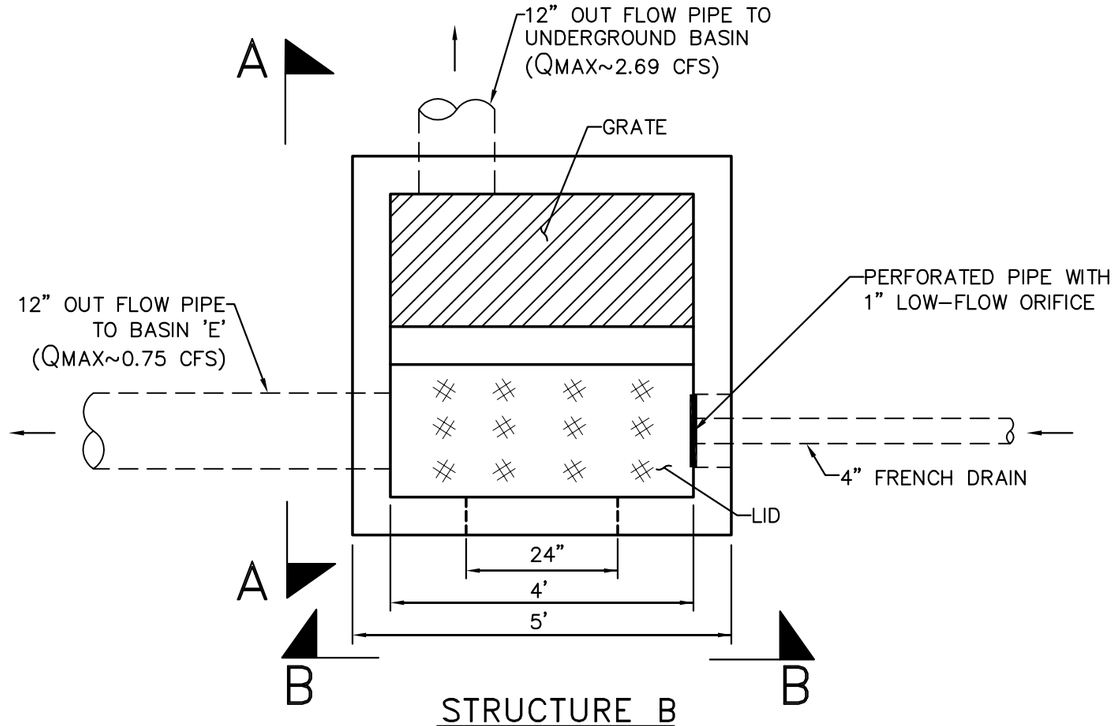

STRUCTURE B
(N.T.S.)

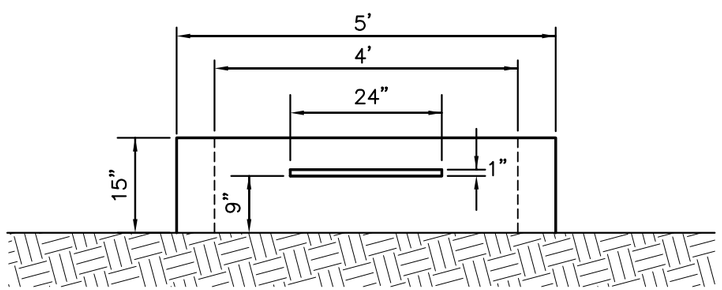

SECTION B–B
(N.T.S.)

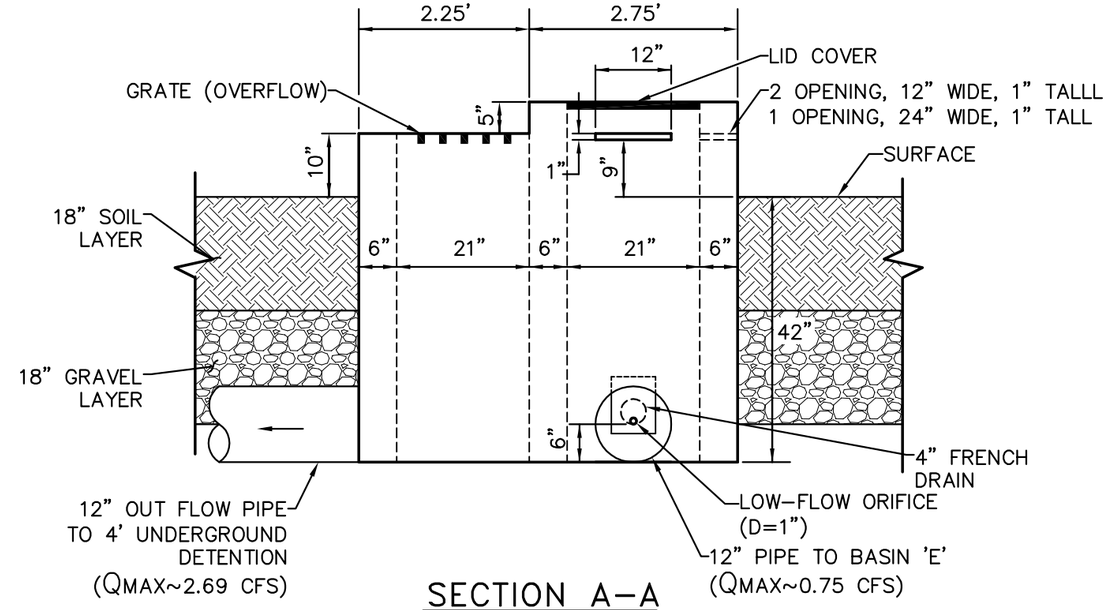

SECTION A–A
(N.T.S.)

R·E·C Consultants, Inc.
Civil Engineering, Environmental
Land Surveying
2442 Second Avenue
San Diego, CA 92101
(619)232-9200 (619)232-9210 Fax

STRUCTURE 'B' DETAIL

NTS

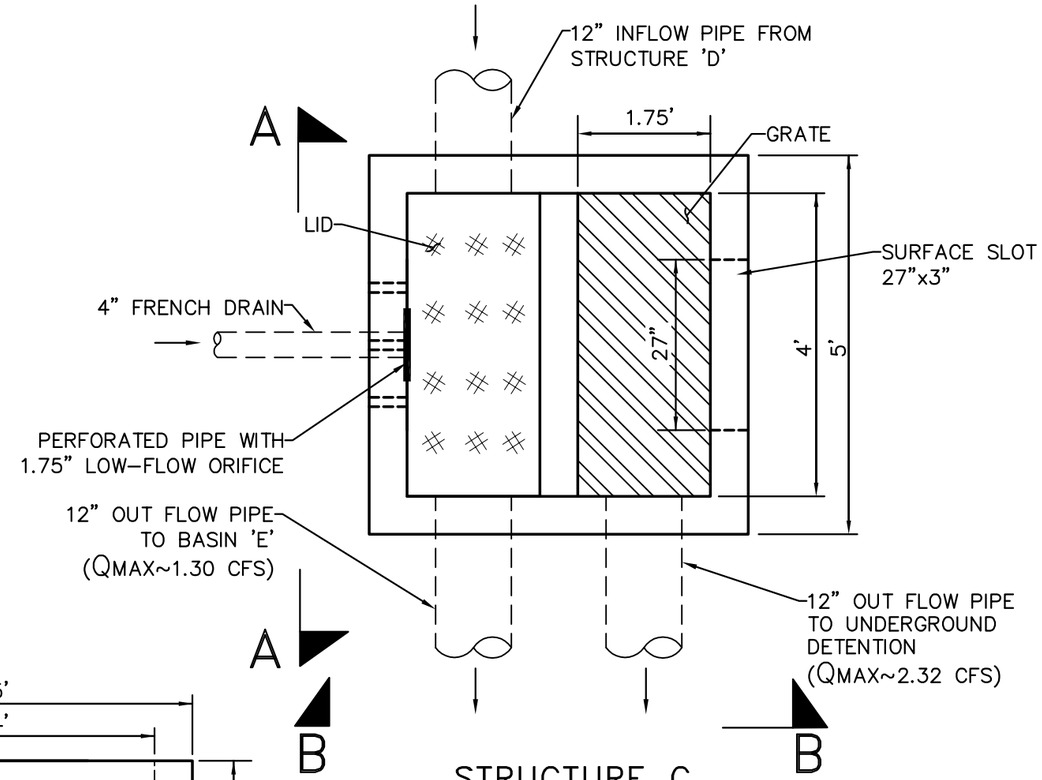

STRUCTURE C
(N.T.S.)

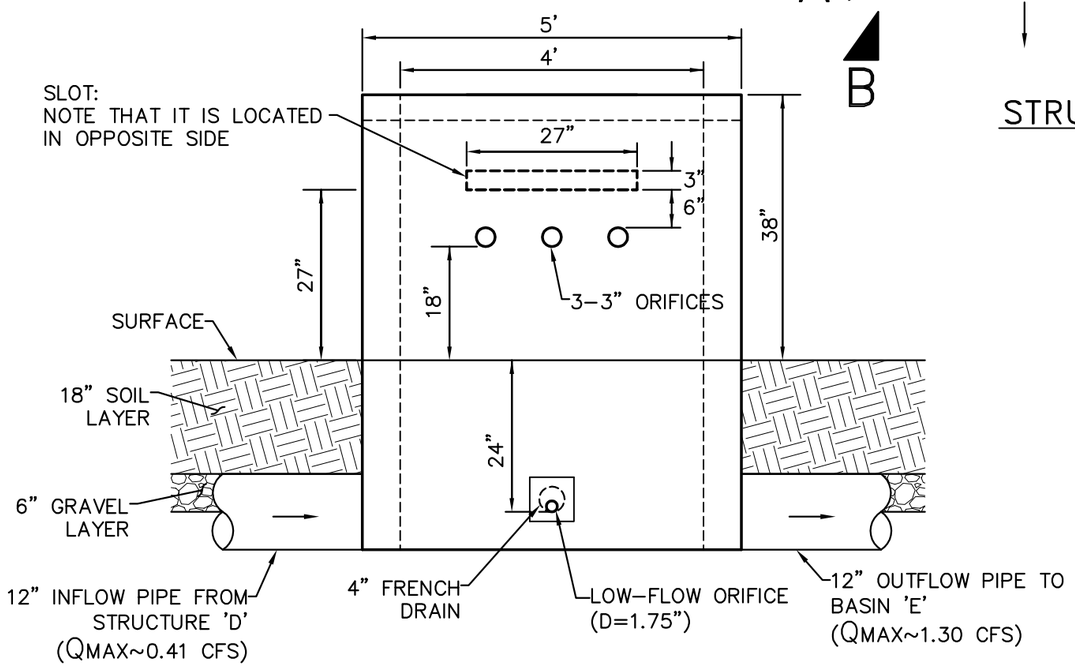

SECTION A-A
(N.T.S.)

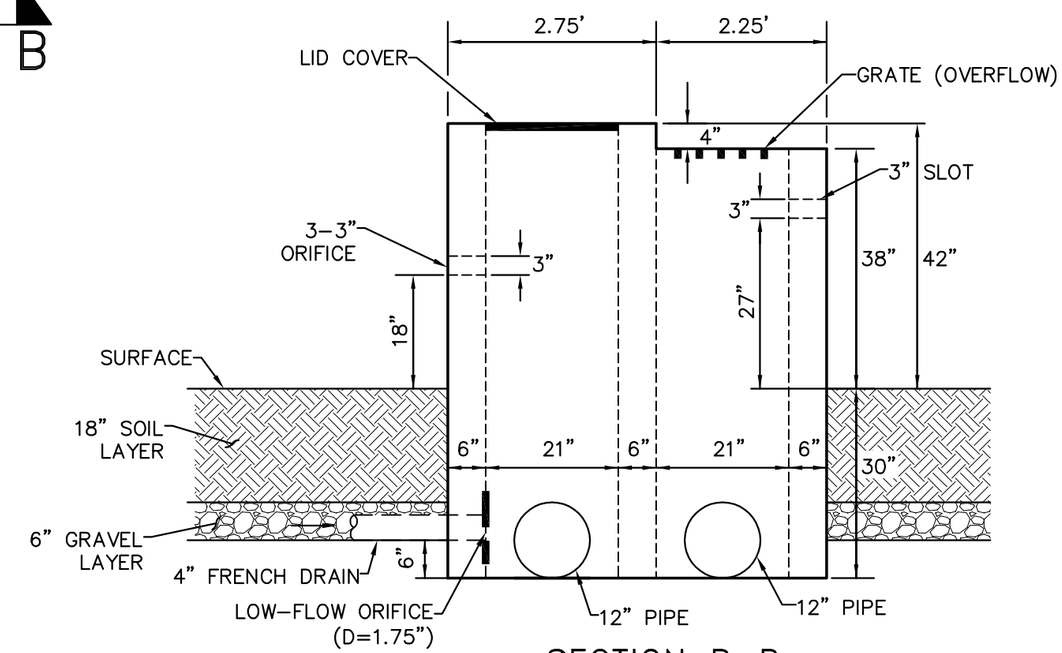

SECTION B-B
(N.T.S.)

R·E·C Consultants, Inc.
Civil Engineering, Environmental
Land Surveying
2442 Second Avenue
San Diego, CA 92101
(619)232-9200 (619)232-9210 Fax

STRUCTURE 'C' DETAIL

NTS

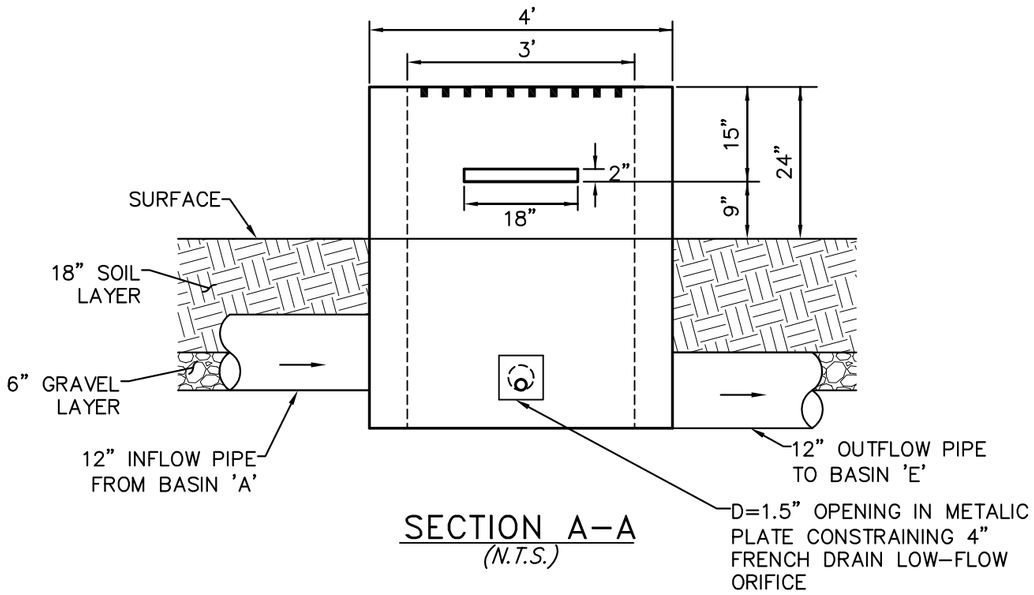

SECTION A-A
(N.T.S.)

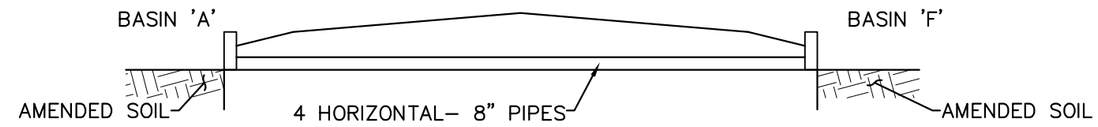

SCHEMATIC SURFACE CONNECTION BASIN 'A' & 'F'
(N.T.S.)

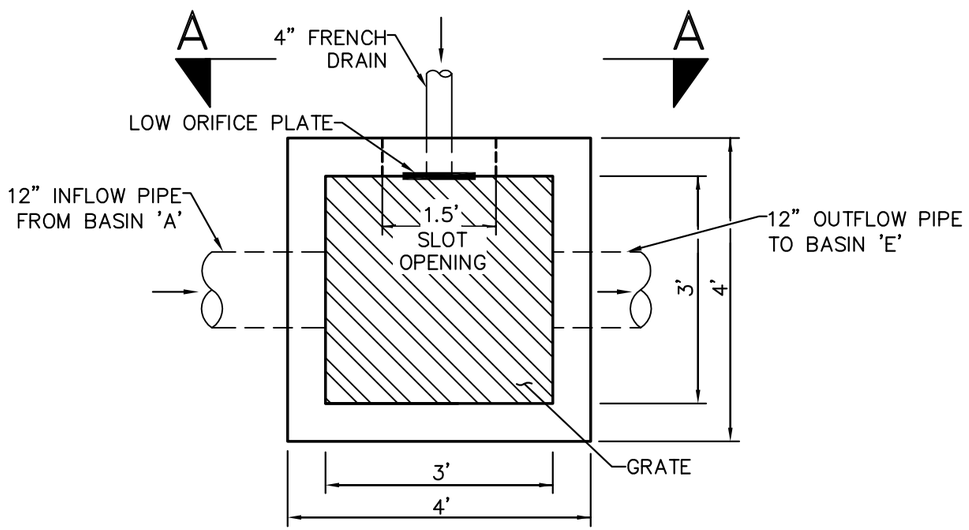

STRUCTURE F
(N.T.S.)

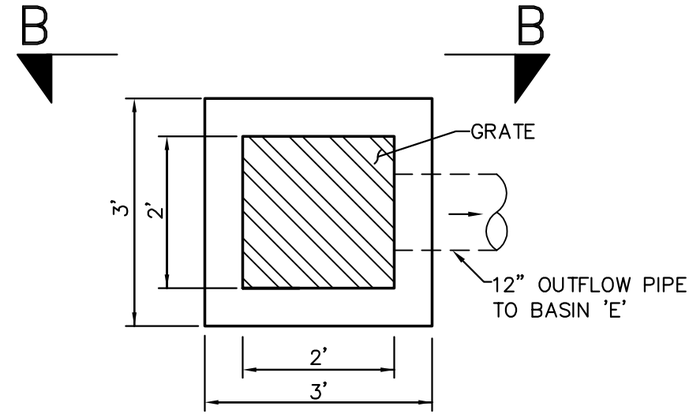

EMERGENCY OVERFLOW BASIN A
(N.T.S.)

NOTE:
EMERGENCY OVERFLOW ONLY TO DISCHARGE IF CONNECTING PIPES FROM 'A' TO 'F' ARE CLOGGED.

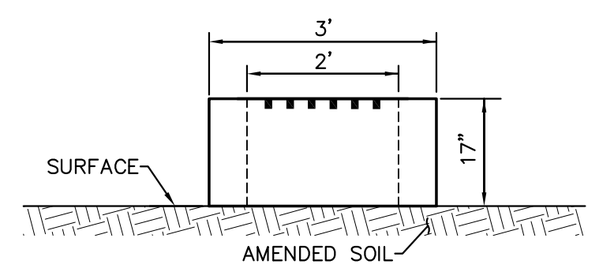

SECTION B-B
(N.T.S.)

STRUCTURE 'F' DETAIL

NTS

EMERGENCY OVERFLOW BASIN 'A'

NTS

R·E·C Consultants, Inc.
Civil Engineering, Environmental Land Surveying
2442 Second Avenue
San Diego, CA 92101
(619)232-9200 (619)232-9210 Fax

NOTE:
HYDRAULICALLY BASIN A+F WORK AS ONE.

SAVE DATE: 3/05/2015 ~ PLOT DATE: 3/05/2015 ~ FILE NAME: P:\Laura\7004 Lakeside\Lakeside CAD\BMP structure sections.dwg

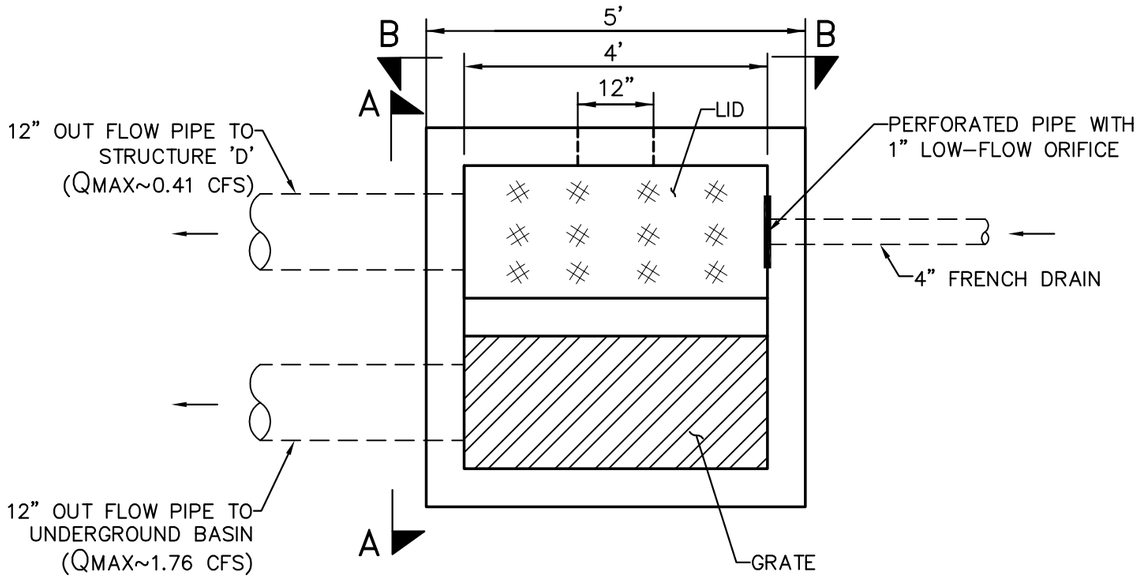

STRUCTURE D
(N.T.S.)

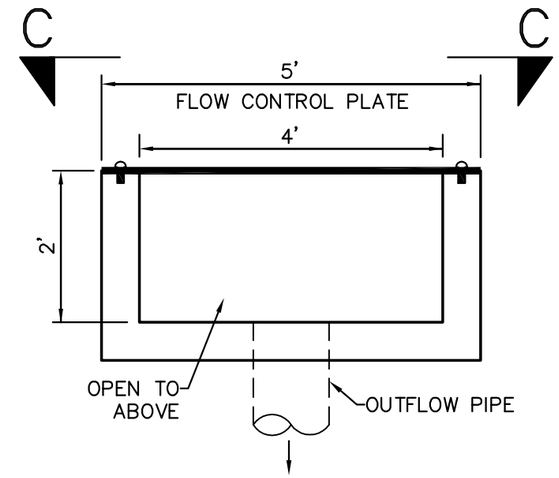

ORIFICE PLATE DETAIL – BASIN 'E'
(N.T.S.)

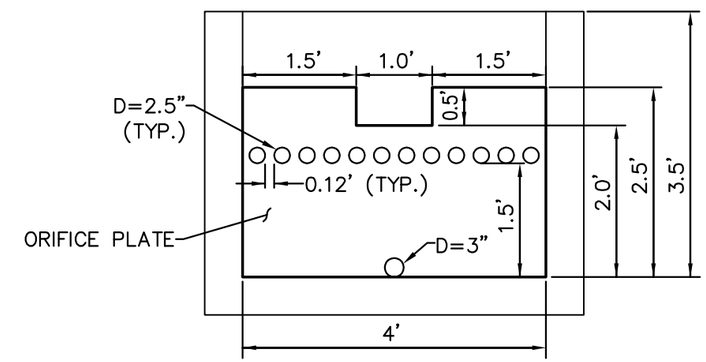

SECTION C–C
(N.T.S.)

OUTLET STRUCTURE BASIN 'E' DETAIL

NTS

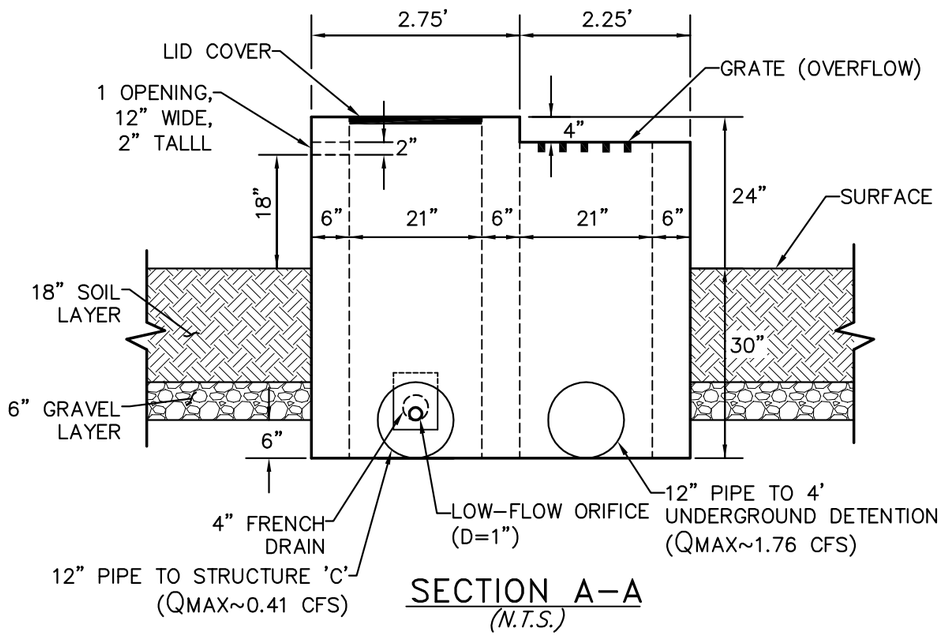

SECTION A–A
(N.T.S.)

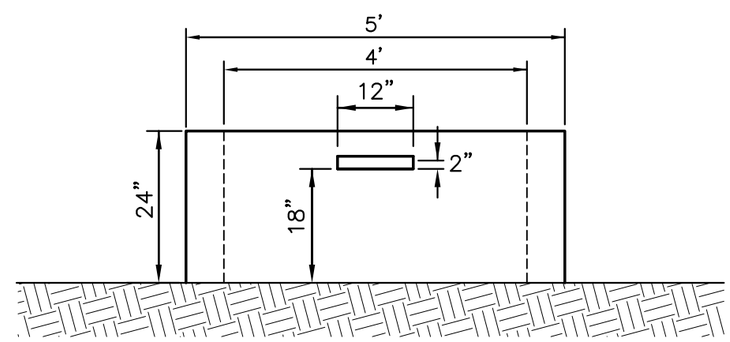

SECTION B–B
(N.T.S.)

REC Consultants, Inc.
Civil Engineering Environmental
Land Surveying
2442 Second Avenue
San Diego, CA 92101
(619)232-9200 (619)232-9210 Fax

STRUCTURE 'D' DETAIL

NTS

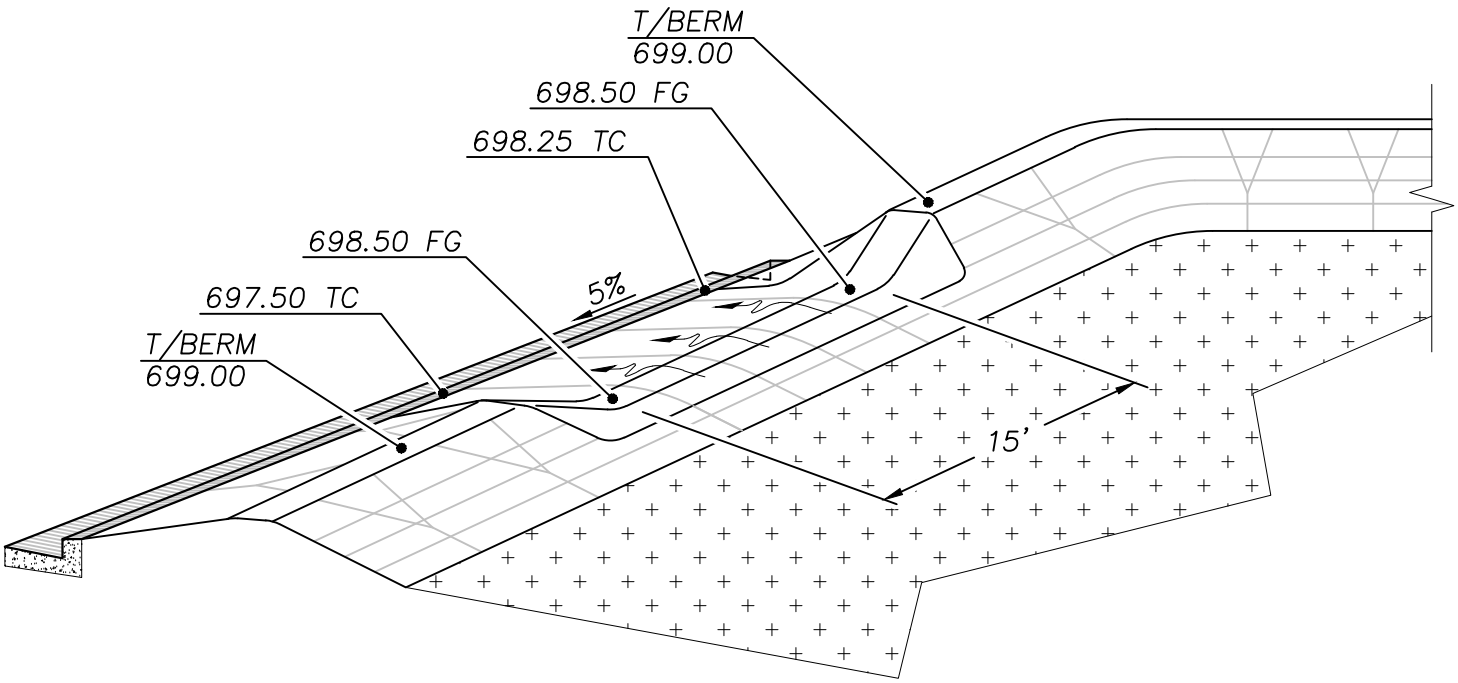

EMERGENCY OVERFLOW FOR LID-C

NO SCALE

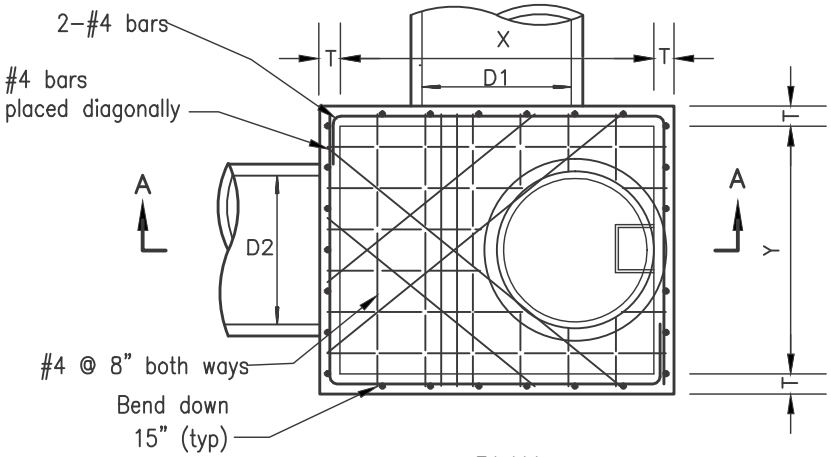

PLAN

TYPE	PIPE DIAMETER (D1)	X	Y (See Note 8)	Z
A4	up to 39"	4'	4'	6'
A5	42" to 48"	5'	4'	6'
A6	51" to 60"	6'	4'	6'
A7	63" to 66"	7'	4'	7'
A8	69" to 78"	8'	4'	8'

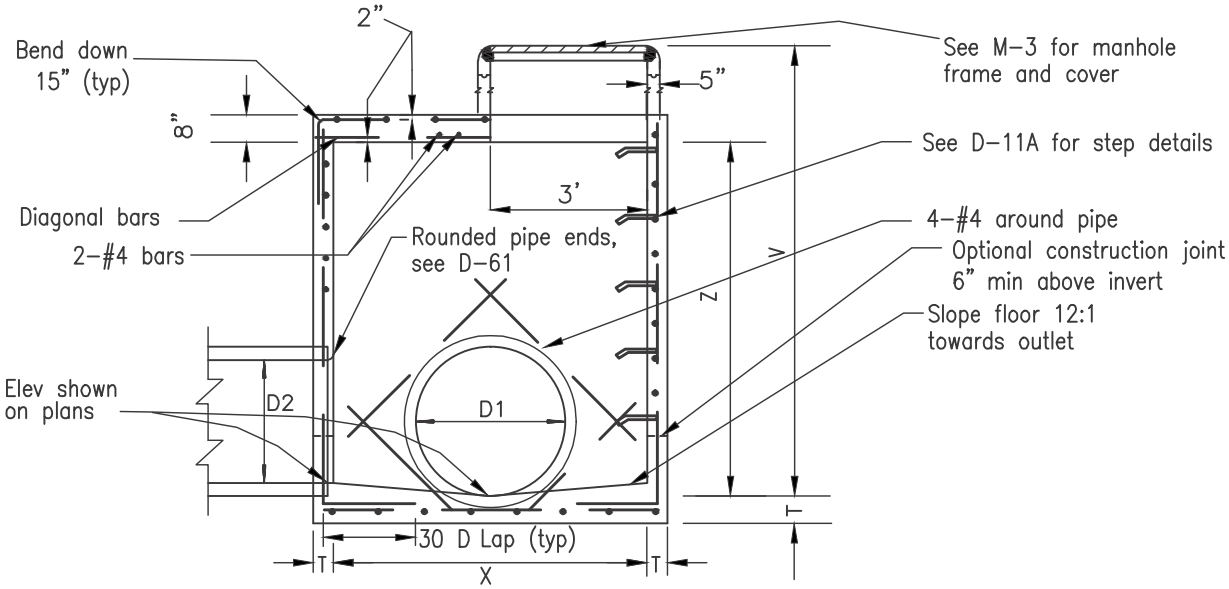

SECTION A–A

NOTES

1. See D–11A & D–11B for additional notes and details.
2. Concrete base shall be 560–C–3250.
3. All precast components shall be reinforced with 1/4" diameter steel, wound spirally on 4" centers.
4. All joints shall be set in Class C mortar.
5. Maintain 1–1/2" clear spacing between reinforcing and concrete surface unless otherwise noted.
6. Exposed edges of concrete shall be rounded with a radius of 1/2".
7. Manhole cover to be marked "Storm Drain".
8. Modifications to "Y" dimension required if pipe (D2) exceeds 39".
9. If constructed adjacent to sidewalk, top of manhole to match sidewalk slope.

LEGEND ON PLANS

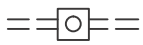

Revision	By	Approved	Date
ORIGINAL		Kercheval	12/75
Add Metric		T. Stanton	03/03
Reformatted		T. Stanton	04/06
Edited		T. Stanton	02/09
Edited	S.S.	T. Regello	03/11

SAN DIEGO REGIONAL STANDARD DRAWING

STORM DRAIN CLEANOUT - TYPE A

RECOMMENDED BY THE SAN DIEGO REGIONAL STANDARDS COMMITTEE

7/26/2012

Chairperson R.C.E. 19246 Date

DRAWING NUMBER **D-09**

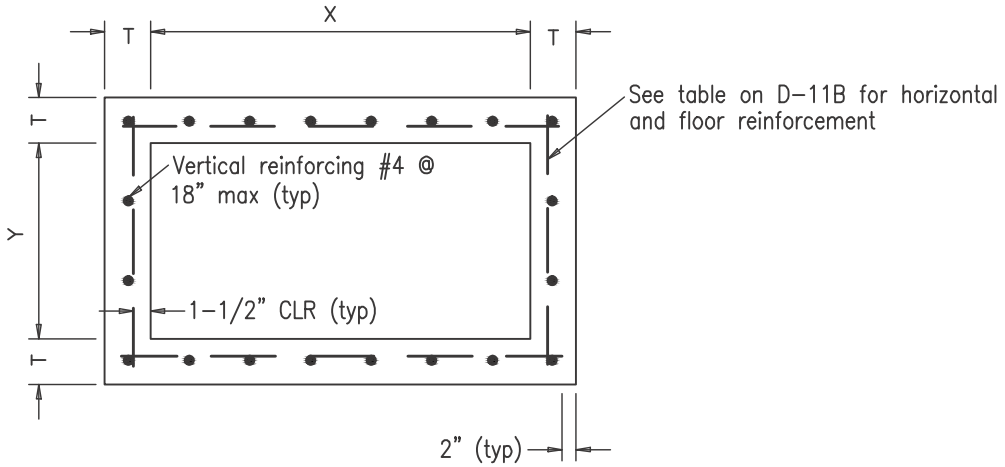

TYPICAL BOX SECTION

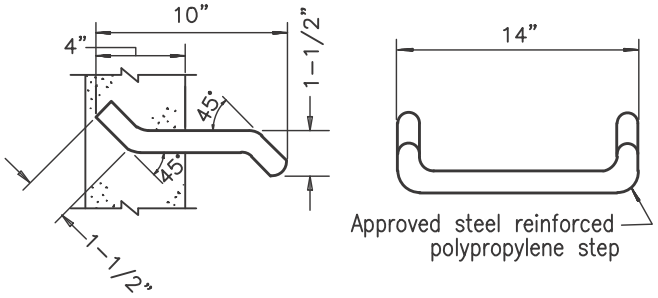

STEP DETAIL

NOTES

1. Concrete shall be 560-C-3250 unless otherwise noted.
2. Reinforcing steel shall comply with this drawing (D-11A and D-11B) unless otherwise specified.
3. Reinforcing steel shall be intermediate grade deformed bars conforming to latest ASTM specifications.
4. Bends shall be in accordance with latest ACI code.
5. Minimum splice length for reinforcing shall be 30 diameters.
6. Floor shall have a wood trowel finish and, except where used as junction boxes, shall have a minimum slope of 1:12 toward the outlet.
7. Depth V is measured from the top of the structure to the flowline of the box.
8. Wall thickness and reinforcing steel required may be decreased in accordance with table on D-11B.
9. Wall thickness shall be stepped on the outside of the box.
10. When the structure depth V exceeds 4', steps shall be cast into the wall at 15" intervals from 15" above floor to within 12" of top of structure. Where possible place steps in wall without pipe opening, otherwise over opening of smallest diameter.
11. Alternate step may be an approved steel reinforced polypropylene step.
12. Upon approval of the Agency, the use of precast storm structures is acceptable as an alternate to cast-in-place. Precast units shall conform to ASTM standards and be manufactured in a permanent facility designed for that purpose.

Revision	By	Approved	Date
ORIGINAL		Kercheval	12/75
Add Metric		T. Stanton	03/03
Reformatted		T. Stanton	04/06
Edited		T. Stanton	02/09
Edited	S.S.	T. Regello	03/11

SAN DIEGO REGIONAL STANDARD DRAWING

INLETS AND CLEANOUTS NOTES AND DETAILS

RECOMMENDED BY THE SAN DIEGO REGIONAL STANDARDS COMMITTEE

7/26/2012

Chairperson R.C.E. 19246 Date

DRAWING NUMBER **D-11A**

BOX SECTION REINFORCEMENT (HORIZONTAL AND FLOOR)			
MAXIMUM SPAN X or Y	DEPTH V	THICKNESS T	HORIZONTAL AND FLOOR REINFORCEMENT SIZE AND SPACING
3' to 4'	4'	6"	#4 @ 18"
4'–1" to 7'			#4 @ 12"
7'–1" to 8'			#4 @ 8"
3' to 4'	4'–1"to 8'	6"	#4 @ 18"
4'–1" to 5'			#4 @ 12"
5'–1" to 6'			#4 @ 8"
6'–1" to 8'			#4 @ 6"
3' to 4'	8'–1" to 12'	6"	#4 @ 15"
4'–1" to 5'		8"	#4 @ 12"
5'–1" to 6'			#4 @ 8"
6'–1" to 8'			#4 @ 6"
3' to 4'	12'–1" to 16'	8"	#4 @ 12"
4'–1" to 5'			#4 @ 12"
5'–1" to 6'			#4 @ 8"
6'–1" to 7'			#4 @ 6"
7'–1" to 8'			#5 @ 8"
3' to 4'	16'–1" to 20'	8"	#4 @ 12"
4'–1" to 5'		10"	#4 @ 12"
5'–1" to 6'			#4 @ 8"
6'–1" to 7'			#4 @ 6"
7'–1" to 8'			#5 @ 8"
3' to 4'	20'–1" to 24'	8"	#4 @ 12"
4'–1" to 5'		10"	#4 @ 12"
5'–1" to 6'			#4 @ 8"
6'–1" to 7'			#4 @ 6"
7'–1" to 8'		12"	#5 @ 8"

Revision	By	Approved	Date
ORIGINAL		Kercheval	12/75
Add Metric		T. Stanton	03/03
Reformatted		T. Stanton	04/06
Edited	S.S.	T. Regello	03/11

SAN DIEGO REGIONAL STANDARD DRAWING

INLETS AND CLEANOUTS NOTES AND DETAILS

RECOMMENDED BY THE SAN DIEGO REGIONAL STANDARDS COMMITTEE

7/26/2012

Chairperson R.C.E. 19246 Date

DRAWING NUMBER **D-11B**

APPENDIX B:

- RatHydro Input and Results

Flows into LID A+F

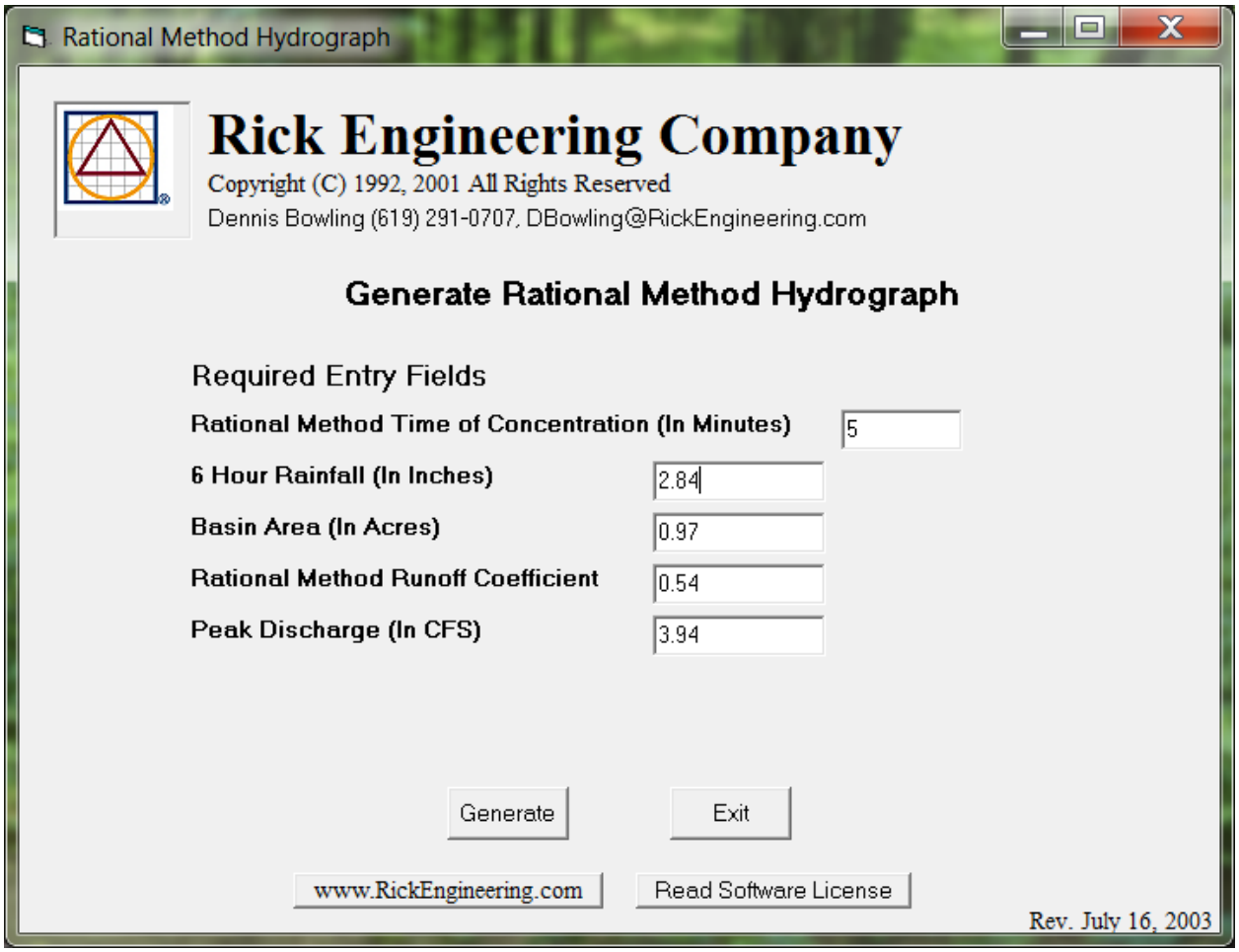

RATIONAL METHOD HYDROGRAPH PROGRAM
COPYRIGHT 1992, 2001 RICK ENGINEERING COMPANY

RUN DATE 3/3/2015
HYDROGRAPH FILE NAME Text1 LID A+F
TIME OF CONCENTRATION 5 MIN.
6 HOUR RAINFALL 2.84 INCHES
BASIN AREA 0.97 ACRES
RUNOFF COEFFICIENT 0.54
PEAK DISCHARGE 3.94 CFS

TIME (MIN) = 0	DISCHARGE (CFS) = 0
TIME (MIN) = 5	DISCHARGE (CFS) = 0.1
TIME (MIN) = 10	DISCHARGE (CFS) = 0.1
TIME (MIN) = 15	DISCHARGE (CFS) = 0.1
TIME (MIN) = 20	DISCHARGE (CFS) = 0.1
TIME (MIN) = 25	DISCHARGE (CFS) = 0.1
TIME (MIN) = 30	DISCHARGE (CFS) = 0.1
TIME (MIN) = 35	DISCHARGE (CFS) = 0.1
TIME (MIN) = 40	DISCHARGE (CFS) = 0.1
TIME (MIN) = 45	DISCHARGE (CFS) = 0.1
TIME (MIN) = 50	DISCHARGE (CFS) = 0.1
TIME (MIN) = 55	DISCHARGE (CFS) = 0.1
TIME (MIN) = 60	DISCHARGE (CFS) = 0.1
TIME (MIN) = 65	DISCHARGE (CFS) = 0.1
TIME (MIN) = 70	DISCHARGE (CFS) = 0.1
TIME (MIN) = 75	DISCHARGE (CFS) = 0.1
TIME (MIN) = 80	DISCHARGE (CFS) = 0.1
TIME (MIN) = 85	DISCHARGE (CFS) = 0.1
TIME (MIN) = 90	DISCHARGE (CFS) = 0.1
TIME (MIN) = 95	DISCHARGE (CFS) = 0.1
TIME (MIN) = 100	DISCHARGE (CFS) = 0.1
TIME (MIN) = 105	DISCHARGE (CFS) = 0.1
TIME (MIN) = 110	DISCHARGE (CFS) = 0.1
TIME (MIN) = 115	DISCHARGE (CFS) = 0.1
TIME (MIN) = 120	DISCHARGE (CFS) = 0.1
TIME (MIN) = 125	DISCHARGE (CFS) = 0.1
TIME (MIN) = 130	DISCHARGE (CFS) = 0.1
TIME (MIN) = 135	DISCHARGE (CFS) = 0.1
TIME (MIN) = 140	DISCHARGE (CFS) = 0.2
TIME (MIN) = 145	DISCHARGE (CFS) = 0.2
TIME (MIN) = 150	DISCHARGE (CFS) = 0.2
TIME (MIN) = 155	DISCHARGE (CFS) = 0.2
TIME (MIN) = 160	DISCHARGE (CFS) = 0.2
TIME (MIN) = 165	DISCHARGE (CFS) = 0.2
TIME (MIN) = 170	DISCHARGE (CFS) = 0.2
TIME (MIN) = 175	DISCHARGE (CFS) = 0.2
TIME (MIN) = 180	DISCHARGE (CFS) = 0.2
TIME (MIN) = 185	DISCHARGE (CFS) = 0.2
TIME (MIN) = 190	DISCHARGE (CFS) = 0.2
TIME (MIN) = 195	DISCHARGE (CFS) = 0.2
TIME (MIN) = 200	DISCHARGE (CFS) = 0.3
TIME (MIN) = 205	DISCHARGE (CFS) = 0.3
TIME (MIN) = 210	DISCHARGE (CFS) = 0.3
TIME (MIN) = 215	DISCHARGE (CFS) = 0.4
TIME (MIN) = 220	DISCHARGE (CFS) = 0.4
TIME (MIN) = 225	DISCHARGE (CFS) = 0.5
TIME (MIN) = 230	DISCHARGE (CFS) = 0.5
TIME (MIN) = 235	DISCHARGE (CFS) = 0.8
TIME (MIN) = 240	DISCHARGE (CFS) = 1.1
TIME (MIN) = 245	DISCHARGE (CFS) = 3.94
TIME (MIN) = 250	DISCHARGE (CFS) = 0.6
TIME (MIN) = 255	DISCHARGE (CFS) = 0.4
TIME (MIN) = 260	DISCHARGE (CFS) = 0.3
TIME (MIN) = 265	DISCHARGE (CFS) = 0.3
TIME (MIN) = 270	DISCHARGE (CFS) = 0.2
TIME (MIN) = 275	DISCHARGE (CFS) = 0.2
TIME (MIN) = 280	DISCHARGE (CFS) = 0.2
TIME (MIN) = 285	DISCHARGE (CFS) = 0.2
TIME (MIN) = 290	DISCHARGE (CFS) = 0.2
TIME (MIN) = 295	DISCHARGE (CFS) = 0.2
TIME (MIN) = 300	DISCHARGE (CFS) = 0.1
TIME (MIN) = 305	DISCHARGE (CFS) = 0.1
TIME (MIN) = 310	DISCHARGE (CFS) = 0.1
TIME (MIN) = 315	DISCHARGE (CFS) = 0.1
TIME (MIN) = 320	DISCHARGE (CFS) = 0.1
TIME (MIN) = 325	DISCHARGE (CFS) = 0.1
TIME (MIN) = 330	DISCHARGE (CFS) = 0.1
TIME (MIN) = 335	DISCHARGE (CFS) = 0.1
TIME (MIN) = 340	DISCHARGE (CFS) = 0.1
TIME (MIN) = 345	DISCHARGE (CFS) = 0.1
TIME (MIN) = 350	DISCHARGE (CFS) = 0.1
TIME (MIN) = 355	DISCHARGE (CFS) = 0.1
TIME (MIN) = 360	DISCHARGE (CFS) = 0.1
TIME (MIN) = 365	DISCHARGE (CFS) = 0

FLOWS INTO LID B

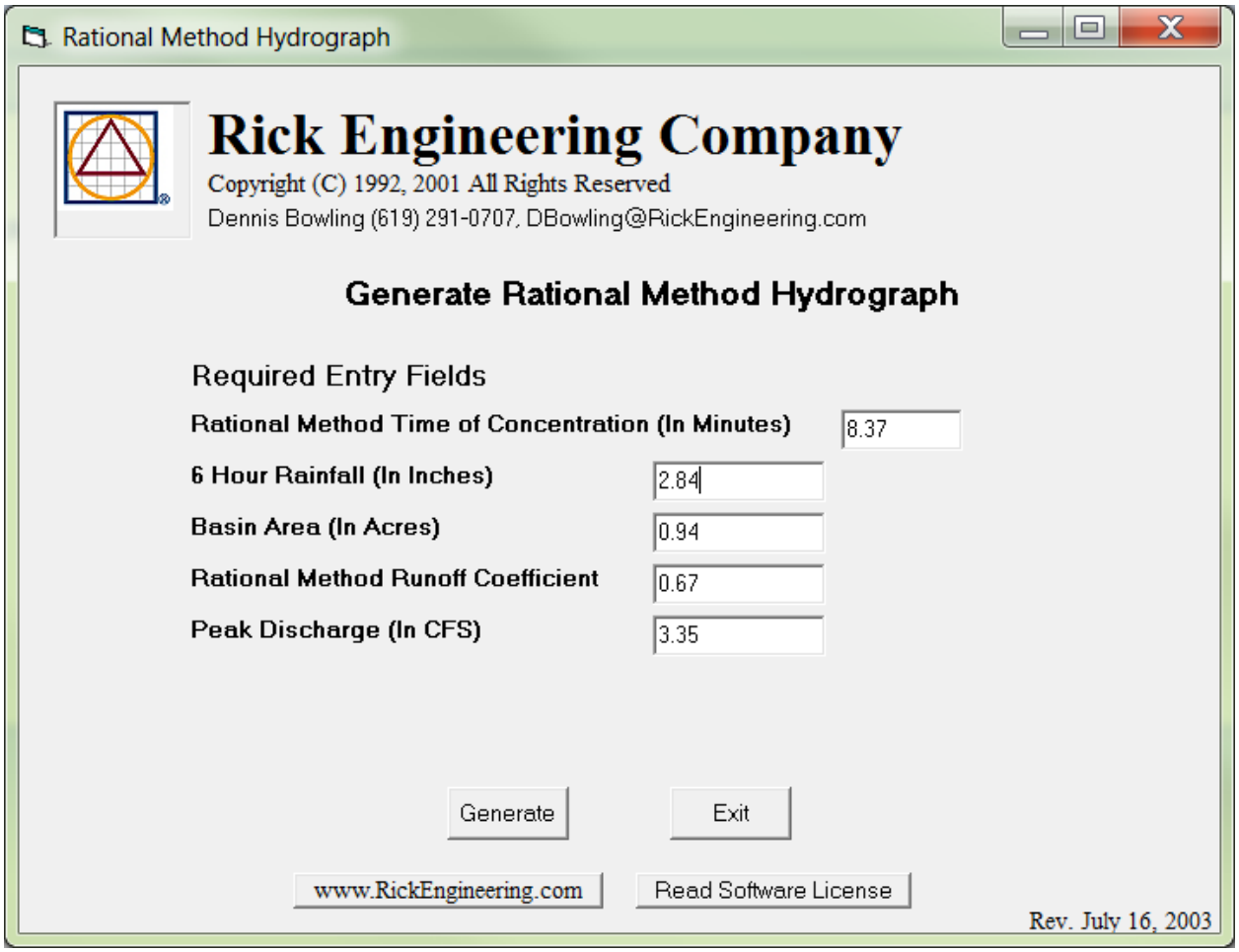

RATIONAL METHOD HYDROGRAPH PROGRAM
COPYRIGHT 1992, 2001 RICK ENGINEERING COMPANY

RUN DATE 3/3/2015
HYDROGRAPH FILE NAME Text1
TIME OF CONCENTRATION 8 MIN.
6 HOUR RAINFALL 2.84 INCHES
BASIN AREA 0.94 ACRES
RUNOFF COEFFICIENT 0.67
PEAK DISCHARGE 3.35 CFS

LID B

TIME (MIN) = 0	DISCHARGE (CFS) = 0
TIME (MIN) = 8	DISCHARGE (CFS) = 0.1
TIME (MIN) = 16	DISCHARGE (CFS) = 0.1
TIME (MIN) = 24	DISCHARGE (CFS) = 0.1
TIME (MIN) = 32	DISCHARGE (CFS) = 0.1
TIME (MIN) = 40	DISCHARGE (CFS) = 0.1
TIME (MIN) = 48	DISCHARGE (CFS) = 0.1
TIME (MIN) = 56	DISCHARGE (CFS) = 0.1
TIME (MIN) = 64	DISCHARGE (CFS) = 0.1
TIME (MIN) = 72	DISCHARGE (CFS) = 0.1
TIME (MIN) = 80	DISCHARGE (CFS) = 0.1
TIME (MIN) = 88	DISCHARGE (CFS) = 0.1
TIME (MIN) = 96	DISCHARGE (CFS) = 0.1
TIME (MIN) = 104	DISCHARGE (CFS) = 0.1
TIME (MIN) = 112	DISCHARGE (CFS) = 0.2
TIME (MIN) = 120	DISCHARGE (CFS) = 0.2
TIME (MIN) = 128	DISCHARGE (CFS) = 0.2
TIME (MIN) = 136	DISCHARGE (CFS) = 0.2
TIME (MIN) = 144	DISCHARGE (CFS) = 0.2
TIME (MIN) = 152	DISCHARGE (CFS) = 0.2
TIME (MIN) = 160	DISCHARGE (CFS) = 0.2
TIME (MIN) = 168	DISCHARGE (CFS) = 0.2
TIME (MIN) = 176	DISCHARGE (CFS) = 0.2
TIME (MIN) = 184	DISCHARGE (CFS) = 0.3
TIME (MIN) = 192	DISCHARGE (CFS) = 0.3
TIME (MIN) = 200	DISCHARGE (CFS) = 0.3
TIME (MIN) = 208	DISCHARGE (CFS) = 0.3
TIME (MIN) = 216	DISCHARGE (CFS) = 0.4
TIME (MIN) = 224	DISCHARGE (CFS) = 0.5
TIME (MIN) = 232	DISCHARGE (CFS) = 0.7
TIME (MIN) = 240	DISCHARGE (CFS) = 1.1
TIME (MIN) = 248	DISCHARGE (CFS) = 3.35
TIME (MIN) = 256	DISCHARGE (CFS) = 0.6
TIME (MIN) = 264	DISCHARGE (CFS) = 0.4
TIME (MIN) = 272	DISCHARGE (CFS) = 0.3
TIME (MIN) = 280	DISCHARGE (CFS) = 0.2
TIME (MIN) = 288	DISCHARGE (CFS) = 0.2
TIME (MIN) = 296	DISCHARGE (CFS) = 0.2
TIME (MIN) = 304	DISCHARGE (CFS) = 0.2
TIME (MIN) = 312	DISCHARGE (CFS) = 0.2
TIME (MIN) = 320	DISCHARGE (CFS) = 0.1
TIME (MIN) = 328	DISCHARGE (CFS) = 0.1
TIME (MIN) = 336	DISCHARGE (CFS) = 0.1
TIME (MIN) = 344	DISCHARGE (CFS) = 0.1
TIME (MIN) = 352	DISCHARGE (CFS) = 0.1
TIME (MIN) = 360	DISCHARGE (CFS) = 0.1
TIME (MIN) = 368	DISCHARGE (CFS) = 0

FLOWS INTO LID C

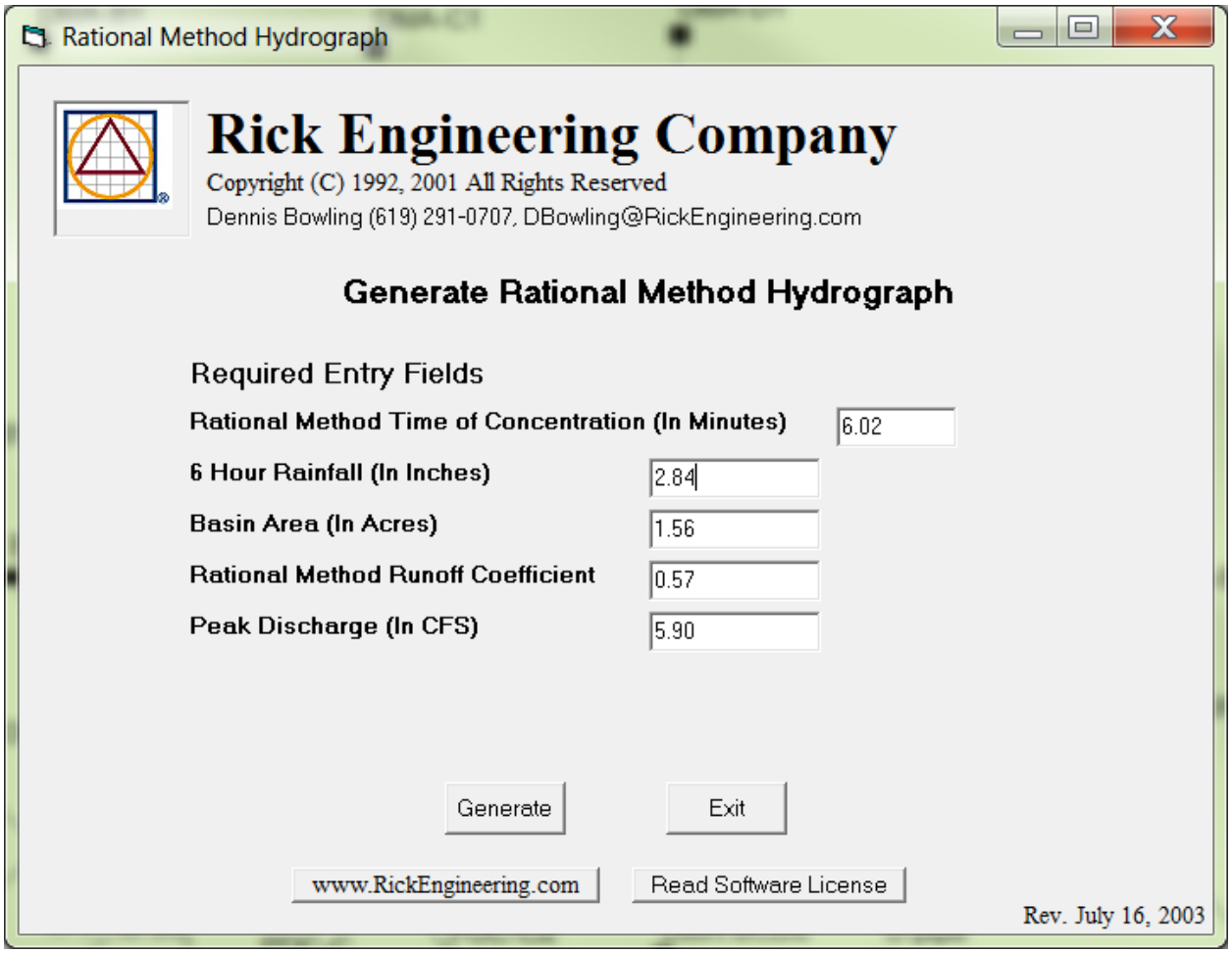

RATIONAL METHOD HYDROGRAPH PROGRAM
COPYRIGHT 1992, 2001 RICK ENGINEERING COMPANY

RUN DATE 3/3/2015
HYDROGRAPH FILE NAME Text1
TIME OF CONCENTRATION 6 MIN.
6 HOUR RAINFALL 2.84 INCHES
BASIN AREA 1.56 ACRES
RUNOFF COEFFICIENT 0.57
PEAK DISCHARGE 5.9 CFS

LID C

TIME (MIN) = 0	DISCHARGE (CFS) = 0
TIME (MIN) = 6	DISCHARGE (CFS) = 0.2
TIME (MIN) = 12	DISCHARGE (CFS) = 0.2
TIME (MIN) = 18	DISCHARGE (CFS) = 0.2
TIME (MIN) = 24	DISCHARGE (CFS) = 0.2
TIME (MIN) = 30	DISCHARGE (CFS) = 0.2
TIME (MIN) = 36	DISCHARGE (CFS) = 0.2
TIME (MIN) = 42	DISCHARGE (CFS) = 0.2
TIME (MIN) = 48	DISCHARGE (CFS) = 0.2
TIME (MIN) = 54	DISCHARGE (CFS) = 0.2
TIME (MIN) = 60	DISCHARGE (CFS) = 0.2
TIME (MIN) = 66	DISCHARGE (CFS) = 0.2
TIME (MIN) = 72	DISCHARGE (CFS) = 0.2
TIME (MIN) = 78	DISCHARGE (CFS) = 0.2
TIME (MIN) = 84	DISCHARGE (CFS) = 0.2
TIME (MIN) = 90	DISCHARGE (CFS) = 0.2
TIME (MIN) = 96	DISCHARGE (CFS) = 0.2
TIME (MIN) = 102	DISCHARGE (CFS) = 0.2
TIME (MIN) = 108	DISCHARGE (CFS) = 0.2
TIME (MIN) = 114	DISCHARGE (CFS) = 0.2
TIME (MIN) = 120	DISCHARGE (CFS) = 0.2
TIME (MIN) = 126	DISCHARGE (CFS) = 0.2
TIME (MIN) = 132	DISCHARGE (CFS) = 0.2
TIME (MIN) = 138	DISCHARGE (CFS) = 0.3
TIME (MIN) = 144	DISCHARGE (CFS) = 0.3
TIME (MIN) = 150	DISCHARGE (CFS) = 0.3
TIME (MIN) = 156	DISCHARGE (CFS) = 0.3
TIME (MIN) = 162	DISCHARGE (CFS) = 0.3
TIME (MIN) = 168	DISCHARGE (CFS) = 0.3
TIME (MIN) = 174	DISCHARGE (CFS) = 0.3
TIME (MIN) = 180	DISCHARGE (CFS) = 0.3
TIME (MIN) = 186	DISCHARGE (CFS) = 0.4
TIME (MIN) = 192	DISCHARGE (CFS) = 0.4
TIME (MIN) = 198	DISCHARGE (CFS) = 0.4
TIME (MIN) = 204	DISCHARGE (CFS) = 0.5
TIME (MIN) = 210	DISCHARGE (CFS) = 0.5
TIME (MIN) = 216	DISCHARGE (CFS) = 0.6
TIME (MIN) = 222	DISCHARGE (CFS) = 0.7
TIME (MIN) = 228	DISCHARGE (CFS) = 0.8
TIME (MIN) = 234	DISCHARGE (CFS) = 1.2
TIME (MIN) = 240	DISCHARGE (CFS) = 1.7
TIME (MIN) = 246	DISCHARGE (CFS) = 5.9
TIME (MIN) = 252	DISCHARGE (CFS) = 0.9
TIME (MIN) = 258	DISCHARGE (CFS) = 0.6
TIME (MIN) = 264	DISCHARGE (CFS) = 0.5
TIME (MIN) = 270	DISCHARGE (CFS) = 0.4
TIME (MIN) = 276	DISCHARGE (CFS) = 0.4
TIME (MIN) = 282	DISCHARGE (CFS) = 0.3
TIME (MIN) = 288	DISCHARGE (CFS) = 0.3
TIME (MIN) = 294	DISCHARGE (CFS) = 0.3
TIME (MIN) = 300	DISCHARGE (CFS) = 0.2
TIME (MIN) = 306	DISCHARGE (CFS) = 0.2
TIME (MIN) = 312	DISCHARGE (CFS) = 0.2
TIME (MIN) = 318	DISCHARGE (CFS) = 0.2
TIME (MIN) = 324	DISCHARGE (CFS) = 0.2
TIME (MIN) = 330	DISCHARGE (CFS) = 0.2
TIME (MIN) = 336	DISCHARGE (CFS) = 0.2
TIME (MIN) = 342	DISCHARGE (CFS) = 0.2
TIME (MIN) = 348	DISCHARGE (CFS) = 0.2
TIME (MIN) = 354	DISCHARGE (CFS) = 0.2
TIME (MIN) = 360	DISCHARGE (CFS) = 0.2
TIME (MIN) = 366	DISCHARGE (CFS) = 0

FLOWS INTO LID D

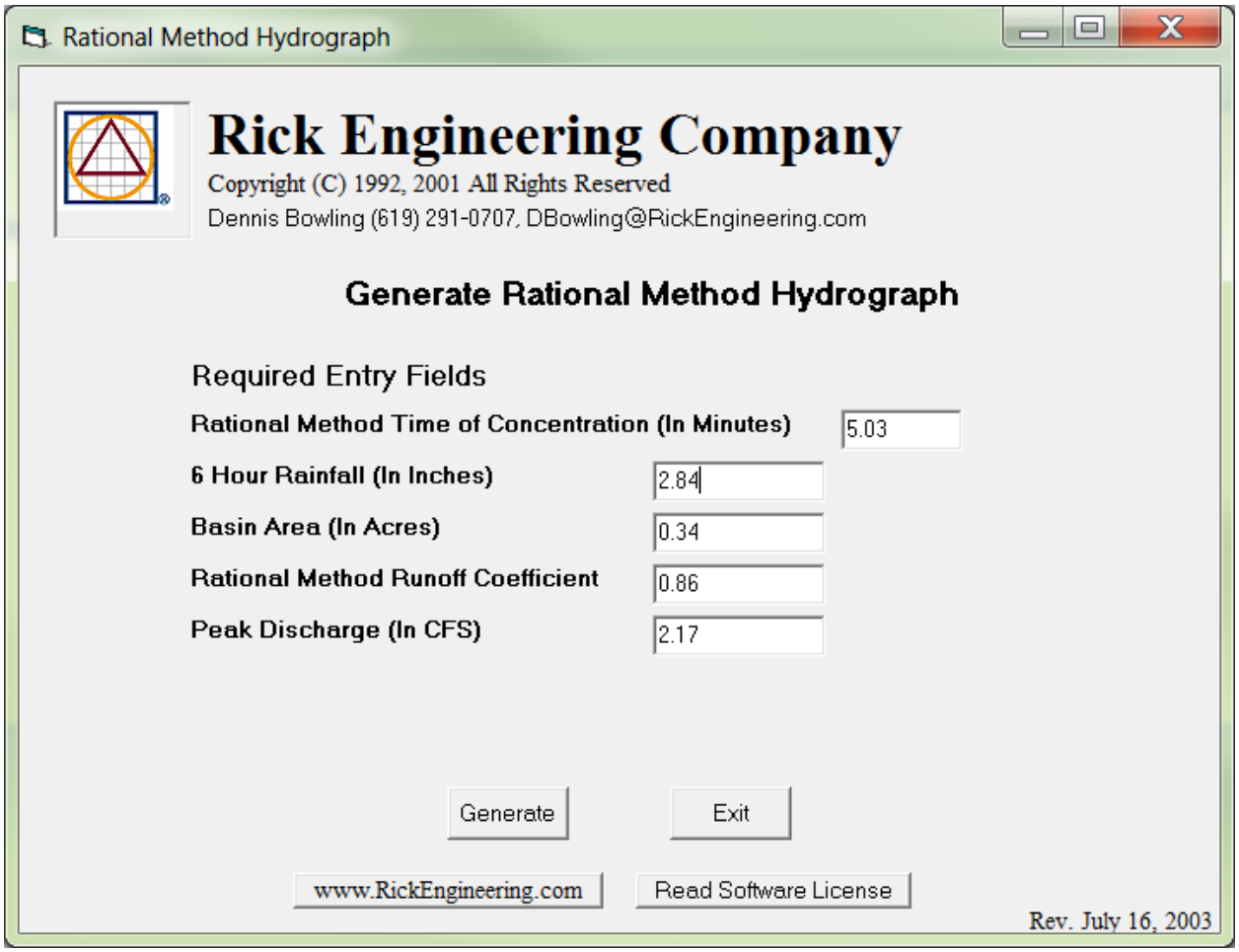

RATIONAL METHOD HYDROGRAPH PROGRAM
COPYRIGHT 1992, 2001 RICK ENGINEERING COMPANY

RUN DATE 3/3/2015
HYDROGRAPH FILE NAME Text1
TIME OF CONCENTRATION 5 MIN.
6 HOUR RAINFALL 2.84 INCHES
BASIN AREA 0.34 ACRES
RUNOFF COEFFICIENT 0.86
PEAK DISCHARGE 2.17 CFS

LID D

TIME (MIN) = 0	DISCHARGE (CFS) = 0
TIME (MIN) = 5	DISCHARGE (CFS) = 0
TIME (MIN) = 10	DISCHARGE (CFS) = 0
TIME (MIN) = 15	DISCHARGE (CFS) = 0.1
TIME (MIN) = 20	DISCHARGE (CFS) = 0.1
TIME (MIN) = 25	DISCHARGE (CFS) = 0.1
TIME (MIN) = 30	DISCHARGE (CFS) = 0.1
TIME (MIN) = 35	DISCHARGE (CFS) = 0.1
TIME (MIN) = 40	DISCHARGE (CFS) = 0.1
TIME (MIN) = 45	DISCHARGE (CFS) = 0.1
TIME (MIN) = 50	DISCHARGE (CFS) = 0.1
TIME (MIN) = 55	DISCHARGE (CFS) = 0.1
TIME (MIN) = 60	DISCHARGE (CFS) = 0.1
TIME (MIN) = 65	DISCHARGE (CFS) = 0.1
TIME (MIN) = 70	DISCHARGE (CFS) = 0.1
TIME (MIN) = 75	DISCHARGE (CFS) = 0.1
TIME (MIN) = 80	DISCHARGE (CFS) = 0.1
TIME (MIN) = 85	DISCHARGE (CFS) = 0.1
TIME (MIN) = 90	DISCHARGE (CFS) = 0.1
TIME (MIN) = 95	DISCHARGE (CFS) = 0.1
TIME (MIN) = 100	DISCHARGE (CFS) = 0.1
TIME (MIN) = 105	DISCHARGE (CFS) = 0.1
TIME (MIN) = 110	DISCHARGE (CFS) = 0.1
TIME (MIN) = 115	DISCHARGE (CFS) = 0.1
TIME (MIN) = 120	DISCHARGE (CFS) = 0.1
TIME (MIN) = 125	DISCHARGE (CFS) = 0.1
TIME (MIN) = 130	DISCHARGE (CFS) = 0.1
TIME (MIN) = 135	DISCHARGE (CFS) = 0.1
TIME (MIN) = 140	DISCHARGE (CFS) = 0.1
TIME (MIN) = 145	DISCHARGE (CFS) = 0.1
TIME (MIN) = 150	DISCHARGE (CFS) = 0.1
TIME (MIN) = 155	DISCHARGE (CFS) = 0.1
TIME (MIN) = 160	DISCHARGE (CFS) = 0.1
TIME (MIN) = 165	DISCHARGE (CFS) = 0.1
TIME (MIN) = 170	DISCHARGE (CFS) = 0.1
TIME (MIN) = 175	DISCHARGE (CFS) = 0.1
TIME (MIN) = 180	DISCHARGE (CFS) = 0.1
TIME (MIN) = 185	DISCHARGE (CFS) = 0.1
TIME (MIN) = 190	DISCHARGE (CFS) = 0.1
TIME (MIN) = 195	DISCHARGE (CFS) = 0.1
TIME (MIN) = 200	DISCHARGE (CFS) = 0.1
TIME (MIN) = 205	DISCHARGE (CFS) = 0.2
TIME (MIN) = 210	DISCHARGE (CFS) = 0.2
TIME (MIN) = 215	DISCHARGE (CFS) = 0.2
TIME (MIN) = 220	DISCHARGE (CFS) = 0.2
TIME (MIN) = 225	DISCHARGE (CFS) = 0.3
TIME (MIN) = 230	DISCHARGE (CFS) = 0.3
TIME (MIN) = 235	DISCHARGE (CFS) = 0.4
TIME (MIN) = 240	DISCHARGE (CFS) = 0.6
TIME (MIN) = 245	DISCHARGE (CFS) = 2.17
TIME (MIN) = 250	DISCHARGE (CFS) = 0.3
TIME (MIN) = 255	DISCHARGE (CFS) = 0.2
TIME (MIN) = 260	DISCHARGE (CFS) = 0.2
TIME (MIN) = 265	DISCHARGE (CFS) = 0.2
TIME (MIN) = 270	DISCHARGE (CFS) = 0.1
TIME (MIN) = 275	DISCHARGE (CFS) = 0.1
TIME (MIN) = 280	DISCHARGE (CFS) = 0.1
TIME (MIN) = 285	DISCHARGE (CFS) = 0.1
TIME (MIN) = 290	DISCHARGE (CFS) = 0.1
TIME (MIN) = 295	DISCHARGE (CFS) = 0.1
TIME (MIN) = 300	DISCHARGE (CFS) = 0.1
TIME (MIN) = 305	DISCHARGE (CFS) = 0.1
TIME (MIN) = 310	DISCHARGE (CFS) = 0.1
TIME (MIN) = 315	DISCHARGE (CFS) = 0.1
TIME (MIN) = 320	DISCHARGE (CFS) = 0.1
TIME (MIN) = 325	DISCHARGE (CFS) = 0.1
TIME (MIN) = 330	DISCHARGE (CFS) = 0.1
TIME (MIN) = 335	DISCHARGE (CFS) = 0.1
TIME (MIN) = 340	DISCHARGE (CFS) = 0.1
TIME (MIN) = 345	DISCHARGE (CFS) = 0.1
TIME (MIN) = 350	DISCHARGE (CFS) = 0.1
TIME (MIN) = 355	DISCHARGE (CFS) = 0.1
TIME (MIN) = 360	DISCHARGE (CFS) = 0.1
TIME (MIN) = 365	DISCHARGE (CFS) = 0

FLOWS INTO DETENTION E

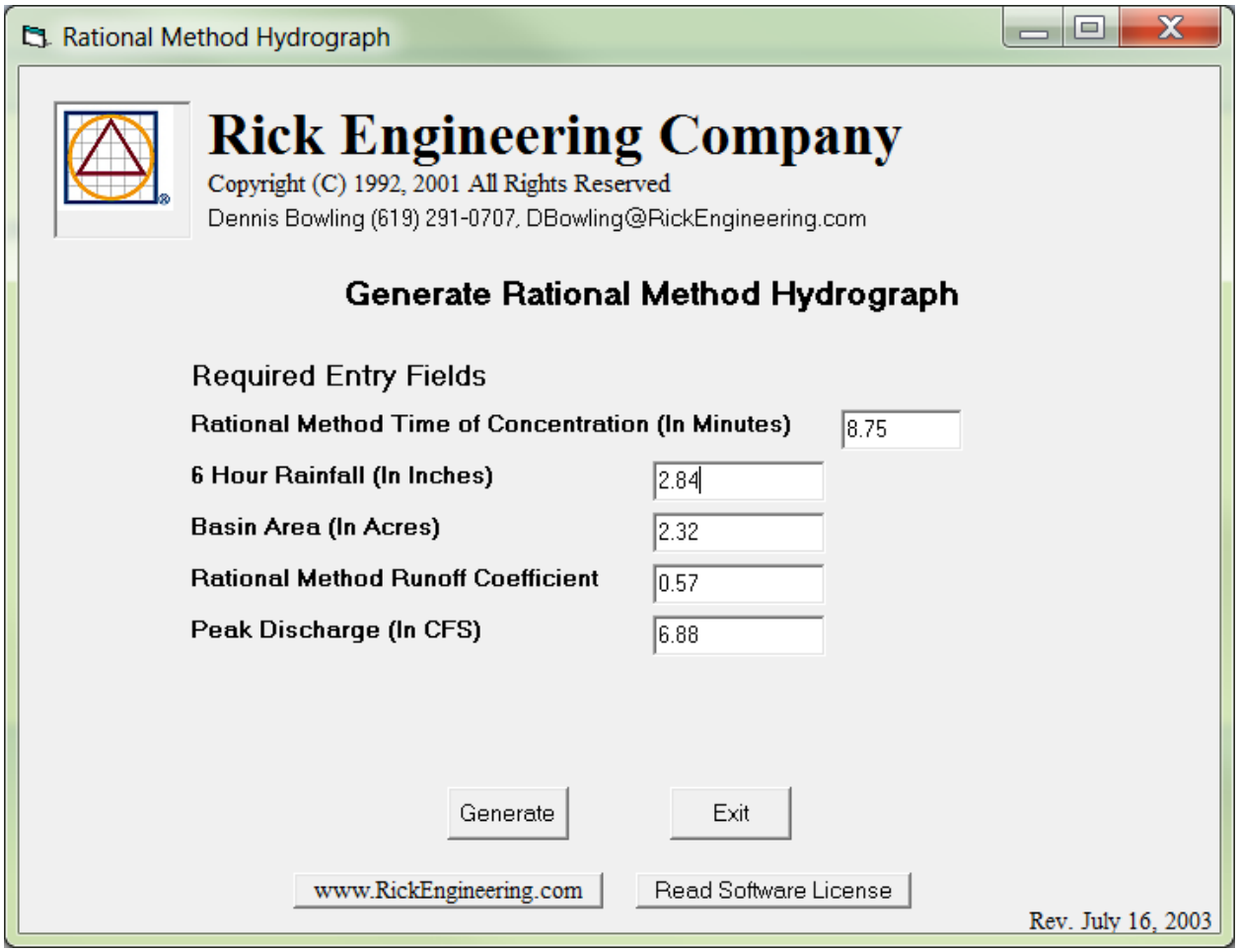

RATIONAL METHOD HYDROGRAPH PROGRAM
COPYRIGHT 1992, 2001 RICK ENGINEERING COMPANY

RUN DATE 3/3/2015
HYDROGRAPH FILE NAME Text1
TIME OF CONCENTRATION 9 MIN.
6 HOUR RAINFALL 2.84 INCHES
BASIN AREA 2.32 ACRES
RUNOFF COEFFICIENT 0.57
PEAK DISCHARGE 6.88 CFS

BASIN E.

TIME (MIN) = 0	DISCHARGE (CFS) = 0
TIME (MIN) = 9	DISCHARGE (CFS) = 0
TIME (MIN) = 18	DISCHARGE (CFS) = 0.2
TIME (MIN) = 27	DISCHARGE (CFS) = 0.2
TIME (MIN) = 36	DISCHARGE (CFS) = 0.2
TIME (MIN) = 45	DISCHARGE (CFS) = 0.2
TIME (MIN) = 54	DISCHARGE (CFS) = 0.3
TIME (MIN) = 63	DISCHARGE (CFS) = 0.3
TIME (MIN) = 72	DISCHARGE (CFS) = 0.3
TIME (MIN) = 81	DISCHARGE (CFS) = 0.3
TIME (MIN) = 90	DISCHARGE (CFS) = 0.3
TIME (MIN) = 99	DISCHARGE (CFS) = 0.3
TIME (MIN) = 108	DISCHARGE (CFS) = 0.3
TIME (MIN) = 117	DISCHARGE (CFS) = 0.3
TIME (MIN) = 126	DISCHARGE (CFS) = 0.3
TIME (MIN) = 135	DISCHARGE (CFS) = 0.4
TIME (MIN) = 144	DISCHARGE (CFS) = 0.4
TIME (MIN) = 153	DISCHARGE (CFS) = 0.4
TIME (MIN) = 162	DISCHARGE (CFS) = 0.4
TIME (MIN) = 171	DISCHARGE (CFS) = 0.4
TIME (MIN) = 180	DISCHARGE (CFS) = 0.5
TIME (MIN) = 189	DISCHARGE (CFS) = 0.5
TIME (MIN) = 198	DISCHARGE (CFS) = 0.6
TIME (MIN) = 207	DISCHARGE (CFS) = 0.7
TIME (MIN) = 216	DISCHARGE (CFS) = 0.8
TIME (MIN) = 225	DISCHARGE (CFS) = 0.9
TIME (MIN) = 234	DISCHARGE (CFS) = 1.3
TIME (MIN) = 243	DISCHARGE (CFS) = 1.8
TIME (MIN) = 252	DISCHARGE (CFS) = 6.88
TIME (MIN) = 261	DISCHARGE (CFS) = 1.1
TIME (MIN) = 270	DISCHARGE (CFS) = 0.7
TIME (MIN) = 279	DISCHARGE (CFS) = 0.6
TIME (MIN) = 288	DISCHARGE (CFS) = 0.5
TIME (MIN) = 297	DISCHARGE (CFS) = 0.4
TIME (MIN) = 306	DISCHARGE (CFS) = 0.4
TIME (MIN) = 315	DISCHARGE (CFS) = 0.3
TIME (MIN) = 324	DISCHARGE (CFS) = 0.3
TIME (MIN) = 333	DISCHARGE (CFS) = 0.3
TIME (MIN) = 342	DISCHARGE (CFS) = 0.3
TIME (MIN) = 351	DISCHARGE (CFS) = 0.2
TIME (MIN) = 360	DISCHARGE (CFS) = 0.2
TIME (MIN) = 369	DISCHARGE (CFS) = 0

APPENDIX C:

- Area vs Elevation Tables
- Discharge Tables
- Diversion Tables

DISCHARGE EQUATIONS

1) Weir:

$$Q_W = C_W \cdot L \cdot H^{3/2} \quad (1)$$

2) Slot:

As an orifice: $$Q_s = B_s \cdot h_s \cdot c_g \cdot \sqrt{2g\left(H - \frac{h_s}{2}\right)} \quad (2.a)$$

As a weir: $$Q_s = C_W \cdot B_s \cdot H^{3/2} \quad (2.b)$$

For H > h_s slot works as weir until orifice equation provides a smaller discharge. The elevation such that equation (2.a) = equation (2.b) is the elevation at which the behavior changes from weir to orifice.

3) Vertical Orifices

As an orifice: $$Q_o = 0.25 \cdot \pi D^2 \cdot c_g \cdot \sqrt{2g\left(H - \frac{D}{2}\right)} \quad (3.a)$$

As a weir: Critical depth and geometric family of circular sector must be solved to determined Q as a function of H:

$$\frac{Q_O^2}{g} = \frac{A_{cr}^3}{T_{cr}}; \quad H = y_{cr} + \frac{A_{cr}}{2 \cdot T_{cr}}; \; T_{cr} = 2\sqrt{y_{cr}(D - y_{cr})}\,; \quad A_{cr} = \frac{D^2}{8}[\alpha_{cr} - sin(\alpha_{cr})]\,;$$

$$y_{cr} = \frac{D}{2}[1 - sin(0.5 \cdot \alpha_{cr})] \quad (3.b.1, 3.b.2, 3.b.3, 3.b.4 \text{ and } 3.b.5)$$

There is a value of H (approximately H = 110% D) from which orifices no longer work as weirs as critical depth is not possible at the entrance of the orifice. This value of H is obtained equaling the discharge using critical equations and equations (3.b).

A mathematical model is prepared with the previous equations depending on the type of discharge.

The following are the variables used above:

Q_W, Q_S, Q_O = Discharge of weir, slot or orifice (cfs)

C_W, c_g : Coefficients of discharge of weir (typically 3.1) and orifice (0.61 to 0.62)

L, B_S, D, h_S : Length of weir, width of slot, diameter of orifice and height of slot, respectively; (ft)

H: Level of water in the pond over the invert of slot, weir or orifice (ft)

A_{cr}, T_{cr}, y_{cr}, α_{cr}: Critical variables for circular sector: area (ft^2), top width (ft), critical depth (ft), and angle to the center, respectively.

Outlet structure for Surface Discharge of Basin A+F

Discharge vs Elevation Table

Lower slot

Invert:	0.00	ft
B	1.50	ft
h	0.167	ft

Notes:

(1) :Lower slot work first as a weir (water elevation < 110% of h_{slot}) and then as a rectangular orifice

(2) h measured from invert of slot

NOTE:

H = h + 2.75

H = 0.00 corresponds to elev. 683.50

Emergency Weir

Invert:	1.25	ft
B:	12	ft

h (ft)	Qslot-low (cfs)	Qemer (cfs)	Qsurf (cfs)
0.000	0.000		0.000
0.042	0.039		0.039
0.083	0.112		0.112
0.125	0.205		0.205
0.167	0.316		0.316
0.208	0.433		0.433
0.250	0.499		0.499
0.292	0.558		0.558
0.333	0.612		0.612
0.375	0.661		0.661
0.417	0.706		0.706
0.458	0.749		0.749
0.500	0.790		0.790
0.542	0.828		0.828
0.583	0.865		0.865
0.625	0.901		0.901
0.667	0.935		0.935
0.708	0.967		0.967
0.750	0.999		0.999
0.792	1.030		1.030
0.833	1.060		1.060
0.875	1.089		1.089
0.917	1.117		1.117
0.958	1.145		1.145
1.000	1.172		1.172
1.042	1.198		1.198
1.083	1.224		1.224
1.125	1.249		1.249
1.167	1.274		1.274
1.208	1.298		1.298
1.250	1.322	0.000	1.322
1.292	1.345	0.316	1.662
1.333	1.368	0.895	2.263
1.375	1.391	1.644	3.035
1.417	1.413	2.531	3.944
1.458	1.435	3.537	4.972
1.500	1.457	4.650	6.107
1.542	1.478	5.860	7.337
1.583	1.499	7.159	8.658
1.625	1.519	8.543	10.062
1.667	1.540	10.005	11.545
1.708	1.560	11.543	13.103
1.750	1.580	13.152	14.732

→

HEC-HMS Information

H (ft)	Qtot (cfs)	Vol (acre-ft)	Vol (cu-ft)	
0.000	0.00000	0.0000000	0	
0.500	0.03716	0.0032048	139.6	gravel
2.000	0.03716	0.0104155	453.7	amended soil + gravel
2.750	0.03716	0.0248417	1082.1	↓ surface ponding + gravel + soil
2.792	0.07657	0.0257860	1123.2	
2.833	0.149	0.0267461	1165.1	From the "↓" point down,
2.875	0.242	0.0277221	1207.6	Surface Volume V added.
2.917	0.353	0.0287142	1250.8	$V = a \cdot h^3 + b \cdot h^2 + c \cdot h$
2.958	0.470	0.0297224	1294.7	(h the same than in surface
3.000	0.537	0.0307469	1339.3	discharge table)
3.042	0.596	0.0317877	1384.7	
3.083	0.649	0.0328451	1430.7	
3.125	0.698	0.0339190	1477.5	
3.167	0.744	0.0350097	1525.0	
3.208	0.786	0.0361172	1573.3	
3.250	0.827	0.0372417	1622.2	
3.292	0.866	0.0383832	1672.0	
3.333	0.902	0.0395420	1722.4	
3.375	0.938	0.0407180	1773.7	
3.417	0.972	0.0419114	1825.7	
3.458	1.005	0.0431224	1878.4	
3.500	1.036	0.0443510	1931.9	
3.542	1.067	0.0455974	1986.2	
3.583	1.097	0.0468616	2041.3	
3.625	1.126	0.0481439	2097.1	
3.667	1.154	0.0494442	2153.8	
3.708	1.182	0.0507628	2211.2	
3.750	1.209	0.0520997	2269.5	
3.792	1.235	0.0534550	2328.5	
3.833	1.261	0.0548289	2388.3	
3.875	1.286	0.0562215	2449.0	
3.917	1.311	0.0576329	2510.5	
3.958	1.335	0.0590632	2572.8	
4.000	1.359	0.0605125	2635.9	
4.042	1.699	0.0619809	2699.9	
4.083	2.300	0.0634687	2764.7	
4.125	3.072	0.0649757	2830.3	
4.167	3.981	0.0665023	2896.8	
4.208	5.009	0.0680485	2964.2	
4.250	6.144	0.0696143	3032.4	
4.292	7.375	0.0712000	3101.5	
4.333	8.695	0.0728057	3171.4	
4.375	10.099	0.0744314	3242.2	
4.417	11.582	0.0760773	3313.9	
4.458	13.140	0.0777434	3386.5	
4.500	14.769	0.0794300	3460.0	

Basin A + F

Elevation (ft)	Area (sq-ft)	Vol (cu-ft)
0.000	698.00	0.00
0.750	977.90	628.46
1.000	1078.80	885.55
1.500	1292.00	1478.25
2.500	1764.00	3006.25

686.9167

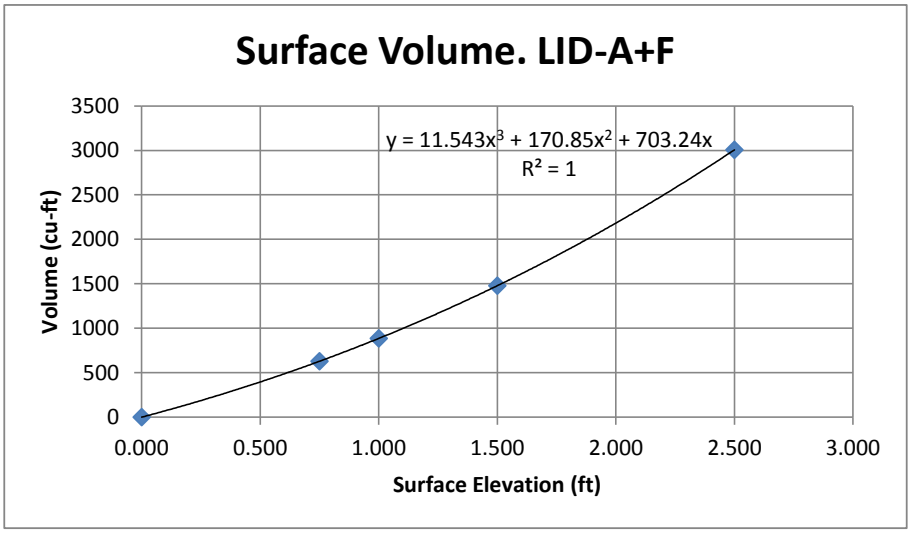

Gravel volume: A_{BMP} x 0.4 x h_{gravel}
Amended soil volume: A_{BMP} x 0.3 x h_{soil}
Surface volume below invert: (A_{bottom} + A_{invert})/2 x h_{surf}

Q_{tot} : $Q_{surface}$ + Q_{low}
H = h + h_{gravel} + h_{soil} + h_{surf}

Q_{tot}: Total flow discharged.
$Q_{surface}$: Surface flow discharged
Q_{low}: Low flow orifice discharge (orifice equation with gravel depth = 0.037 cfs)
Note: Qlow = LID discharge, approved in the SWMM model, and considered as it increases total discharge

h_{gravel}:	0.5 ft	(gravel depth)
h_{soil} :	1.5 ft	(amended soil depth)
h_{surf}:	0.75 ft	(invert elevation of lowest surface outlet)
h:	Elevation measured over invert of lowest surface outlet	

A_{BMP}: BMP area: 698 sq-ft
A_{invert}: Area of BMP at elevation of lowest surface invert

INITIAL ELEV. FOR HEC-HMS: h_{gravel} + h_{soil} + h_{surf}

Outlet structure for Discharge of Detention Basin B

Discharge vs Elevation Table

Lower slot

Invert:	0.00	ft
B	4.00	ft
h	0.083	ft

Notes:

(1) :Lower slot work first as a weir (water elevation < 110% of h_{slot}) and then as a rectangular orifice

(2) h measured from invert of slot

NOTE:

H = h + 3.75

H = 0.00 corresponds to elev. 699.25

Emergency Weir

Invert:	0.083	ft
B:	7.5	ft

h (ft)	Qslot-low (cfs)	Qemer (cfs)	Qtot (cfs)
0.000	0.000		0.000
0.042	0.105		0.105
0.083	0.298	0.000	0.298
0.125	0.471	0.198	0.668
0.167	0.577	0.559	1.136
0.208	0.666	1.027	1.693
0.250	0.745	1.582	2.326
0.292	0.816	2.211	3.026
0.333	0.881	2.906	3.787
0.375	0.942	3.662	4.604
0.417	0.999	4.474	5.473

→

HEC-HMS Information

H (ft)	Qtot (cfs)	Vol (acre-ft)	Vol (cu-ft)	
0.000	0.0000	0.0000000	0	
1.500	0.0321	0.0086777	378.0	gravel
3.000	0.0321	0.0151860	661.5	amended soil + gravel
3.750	0.0321	0.0273889	1193.1	↓ surface ponding + gravel + soil
3.792	0.1372	0.0281464	1226.1	
3.833	0.3299	0.0289122	1259.4	
3.875	0.7005	0.0296864	1293.1	
3.917	1.1680	0.0304690	1327.2	
3.958	1.7254	0.0312599	1361.7	
4.000	2.3585	0.0320592	1396.5	
4.042	3.0585	0.0328669	1431.7	
4.083	3.8193	0.0336829	1467.2	
4.125	4.6362	0.0345074	1503.1	
4.167	5.5055	0.0353401	1539.4	

From the "↓" point down, Surface Volume V added. $V = a \cdot h^3 + b \cdot h^2 + c \cdot h$ (h the same than in surface discharge table)

Note : Yellow columns represent diversion table to underground system.

DIVERSION TABLE FOR HEC-HMS

(Obtained by adding low flow to yellow columns)

Outflow	Inflow
0.000	0.000
0.1372	0.1372
0.3299	0.3299
0.5029	0.7005
0.6088	1.1680
0.6981	1.7254
0.7767	2.3585
0.8478	3.0585
0.9132	3.8193
0.9740	4.6362
1.0312	5.5055

Basin B

Elevation (ft)	Area (sq-ft)	Vol (cu-ft)
0.000	630.00	0.00
0.750	787.50	531.56
1.000	840.00	735.00

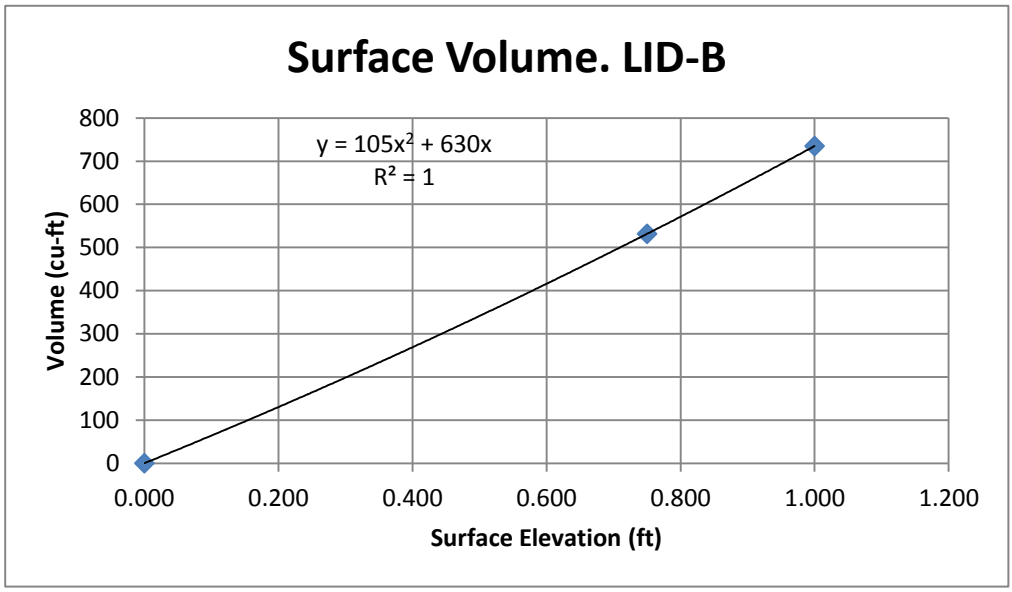

Gravel volume: A_{BMP} x 0.4 x h_{gravel}
Amended soil volume: A_{BMP} x 0.3 x h_{soil}
Surface volume below invert: $(A_{bottom} + A_{invert})/2$ x h_{surf}

Q_{tot} : $Q_{surface} + Q_{low}$
$H = h + h_{gravel} + h_{soil} + h_{surf}$

Q_{tot}: Total flow discharged.
$Q_{surface}$: Surface flow discharged
Q_{low}: Low flow orifice discharge (orifice equation with gravel depth = 0.032 cfs)
Note: Qlow = LID discharge, approved in the SWMM model, and considered as it increases total discharge

h_{gravel}:	1.5 ft	(gravel depth)
h_{soil} :	1.5 ft	(amended soil depth)
h_{surf}:	0.75 ft	(invert elevation of lowest surface outlet)
h:	Elevation measured over invert of lowest surface outlet	

A_{BMP}: BMP area: 630 sq-ft
A_{invert}: Area of BMP at elevation of lowest surface invert

INITIAL ELEV. FOR HEC-HMS: $h_{gravel} + h_{soil} + h_{surf}$

Outlet structure for Discharge of Detention Basin C

Discharge vs Elevation Table

Low orifice:	3 "	Lower slot			
Number:	3	Invert:	0.75	ft	
Cg-low:	0.62	B	2.25	ft	
		h	0.250	ft	

NOTE:
H = h + 3.5
H = 0.00 corresponds to elev. 693.00

Emergency Weir
Invert: 1.67 ft
B: 7.5 ft

Notes:
(1): Lower orifices first work as a weir (h < 110% D) and then as orifices.
(2): Lower slot first work as a weir (h < 110% hweir) and then as rect. Orif.
(3): h measured from invert of low orifices

h (ft)	H/D-low -	Qlow-orif (cfs)	Qlow-weir (cfs)	Qtot-low (cfs)	Qslot-low (cfs)	Qemer (cfs)	Qtot (cfs)
0.000	0.000	0.000	0.000	0.000	0.000		0.000
0.042	0.167	0.000	0.009	0.009	0.000		0.009
0.083	0.333	0.000	0.033	0.033	0.000		0.033
0.125	0.500	0.000	0.072	0.072	0.000		0.072
0.167	0.667	0.150	0.122	0.122	0.000		0.122
0.208	0.833	0.212	0.180	0.180	0.000		0.180
0.250	1.000	0.259	0.244	0.244	0.000		0.244
0.292	1.167	0.299	0.310	0.299	0.000		0.299
0.333	1.333	0.334	0.376	0.334	0.000		0.334
0.375	1.500	0.366	0.438	0.366	0.000		0.366
0.417	1.667	0.396	0.496	0.396	0.000		0.396
0.458	1.833	0.423	0.545	0.423	0.000		0.423
0.500	2.000	0.449	0.586	0.449	0.000		0.449
0.542	2.167	0.473	0.617	0.473	0.000		0.473
0.583	2.333	0.496	0.639	0.496	0.000		0.496
0.625	2.500	0.518	0.652	0.518	0.000		0.518
0.667	2.667	0.539	0.658	0.539	0.000		0.539
0.708	2.833	0.560	0.659	0.560	0.000		0.560
0.750	3.000	0.579	0.662	0.579	0.000		0.579
0.792	3.167	0.598	0.670	0.598	0.059		0.658
0.833	3.333	0.617	0.691	0.617	0.168		0.784
0.875	3.500	0.635	0.734	0.635	0.308		0.943
0.917	3.667	0.652	0.810	0.652	0.475		1.127
0.958	3.833	0.669	0.929	0.669	0.663		1.332
1.000	4.000	0.685	1.107	0.685	0.872		1.557
1.042	4.167	0.702	1.359	0.702	1.099		1.800
1.083	4.333	0.717	1.704	0.717	1.257		1.974
1.125	4.500	0.733	2.163	0.733	1.377		2.109
1.167	4.667	0.748	2.758	0.748	1.487		2.235
1.208	4.833	0.763	3.516	0.763	1.590		2.352
1.250	5.000	0.777	4.463	0.777	1.686		2.463
1.292	5.167	0.791	5.631	0.791	1.777		2.569
1.333	5.333	0.805	7.054	0.805	1.864		2.670
1.375	5.500	0.819	8.192	0.819	1.947	0.000	2.766
1.417	5.667	0.833	8.327	0.833	2.027	0.000	2.859
1.458	5.833	0.846	8.460	0.846	2.103	0.000	2.949
1.500	6.000	0.859	8.592	0.859	2.177	0.000	3.036
1.542	6.167	0.872	8.721	0.872	2.248	0.000	3.120
1.583	6.333	0.885	8.848	0.885	2.317	0.000	3.202
1.625	6.500	0.897	8.974	0.897	2.385	0.000	3.282
1.667	6.667	0.910	9.097	0.910	2.450	0.000	3.360
1.708	6.833	0.922	9.220	0.922	2.514	0.198	3.633
1.750	7.000	0.934	9.340	0.934	2.576	0.559	4.069
1.792	7.167	0.946	9.459	0.946	2.636	1.028	4.610
1.833	7.333	0.958	9.577	0.958	2.696	1.582	5.235
1.875	7.500	0.969	9.693	0.969	2.754	2.211	5.934
1.917	7.667	0.981	9.807	0.981	2.810	2.906	6.697
1.958	7.833	0.992	9.921	0.992	2.866	3.662	7.520
2.000	8.000	1.003	10.033	1.003	2.921	4.474	8.398

Note : Yellow columns represent diversion table to underground system.

HEC-HMS Information

H (ft)	Qtot (cfs)	Vol (acre-ft)	Vol (cu-ft)	
0.000	0.0000	0.0000000	0	
0.500	0.0492	0.0052034	226.7	gravel
2.000	0.0492	0.0169110	736.6	amended soil + gravel
3.500	0.0492	0.0472527	2058.3	↓ surface ponding + gravel + soil
3.542	0.0579	0.0483430	2105.8	
3.583	0.0825	0.0494464	2153.9	
3.625	0.1210	0.0505631	2202.5	
3.667	0.1707	0.0516929	2251.7	
3.708	0.2289	0.0528359	2301.5	
3.750	0.2927	0.0539921	2351.9	
3.792	0.3483	0.0551614	2402.8	
3.833	0.3836	0.0563438	2454.3	
3.875	0.4155	0.0575392	2506.4	
3.917	0.4449	0.0587478	2559.1	
3.958	0.4722	0.0599695	2612.3	
4.000	0.4978	0.0612042	2666.1	
4.042	0.5221	0.0624520	2720.4	
4.083	0.5452	0.0637128	2775.3	
4.125	0.5672	0.0649866	2830.8	
4.167	0.5884	0.0662735	2886.9	
4.208	0.6088	0.0675733	2943.5	
4.250	0.6284	0.0688861	3000.7	
4.292	0.7067	0.0702119	3058.4	
4.333	0.8336	0.0715507	3116.7	
4.375	0.9919	0.0729023	3175.6	
4.417	1.1757	0.0742669	3235.1	
4.458	1.3813	0.0756444	3295.1	
4.500	1.6064	0.0770348	3355.6	
4.542	1.8493	0.0784381	3416.8	
4.583	2.0232	0.0798543	3478.5	
4.625	2.1586	0.0812833	3540.7	
4.667	2.2841	0.0827251	3603.5	
4.708	2.4015	0.0841798	3666.9	
4.750	2.5125	0.0856473	3730.8	
4.792	2.6180	0.0871276	3795.3	
4.833	2.7187	0.0886207	3860.3	
4.875	2.8154	0.0901266	3925.9	
4.917	2.9084	0.0916452	3992.1	
4.958	2.9983	0.0931765	4058.8	
5.000	3.0852	0.0947206	4126.0	
5.042	3.1695	0.0962774	4193.8	
5.083	3.2514	0.0978469	4262.2	
5.125	3.3312	0.0994291	4331.1	
5.167	3.4089	0.1010240	4400.6	
5.208	3.6825	0.1026316	4470.6	
5.250	4.1182	0.1042518	4541.2	
5.292	4.6589	0.1058846	4612.3	
5.333	5.2844	0.1075300	4684.0	
5.375	5.9828	0.1091881	4756.2	
5.417	6.7465	0.1108587	4829.0	
5.458	7.5695	0.1125419	4902.3	
5.500	8.4475	0.1142377	4976.2	

From the "↓" point down,
Surface Volume V added.
$V = a \cdot h^3 + b \cdot h^2 + c \cdot h$
(h the same than in surface discharge table)

Basin C

DIVERSION

Out (cfs)	In (cfs)
0.0000	0.000
0.6284	0.6284
0.6474	0.7067
0.6658	0.8336
0.6837	0.9919
0.7011	1.1757
0.7180	1.3813
0.7345	1.6064
0.7507	1.8493
0.7664	2.0232
0.7818	2.1586
0.7970	2.2841
0.8118	2.4015
0.8263	2.5125
0.8406	2.6180
0.8546	2.7187
0.8683	2.8154
0.8819	2.9084
0.8952	2.9983
0.9083	3.0852
0.9212	3.1695
0.9340	3.2514
0.9465	3.3312
0.9589	3.4089
0.9711	3.6825
0.9832	4.1182
0.9951	4.6589
1.0068	5.2844
1.0184	5.9828
1.0299	6.7465
1.0412	7.5695
1.0524	8.4475

Note:

Blue column:

Yelow columns plus LID discharge

Out: To Basin E

Elevation (ft)	Area (sq-ft)	Vol (cu-ft)
0.000	627.0	0.00
1.000	966.5	796.75
1.500	1133.3	1321.70
2.000	1298.0	1929.53
3.000	1621.4	3389.23
3.500	1780.0	4239.58

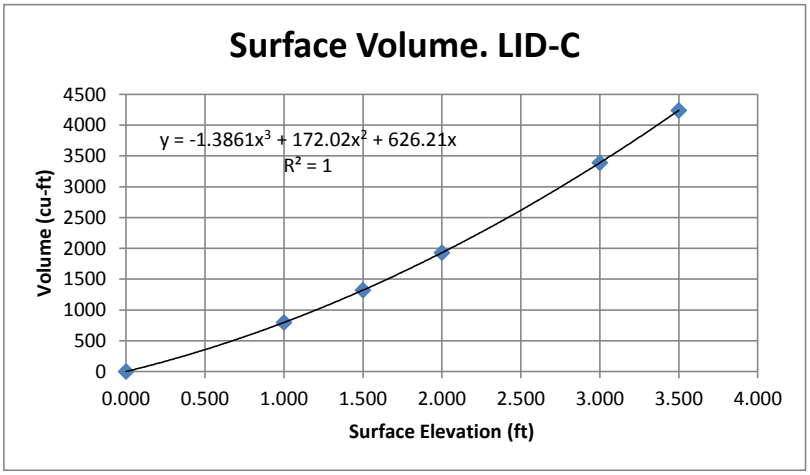

Gravel volume: A_{BMP} x 0.4 x h_{gravel}

Amended soil volume: A_{BMP} x 0.3 x h_{soil}

Surface volume below invert: $(A_{bottom} + A_{invert})/2$ x h_{surf}

Q_{tot} : $Q_{surface} + Q_{low}$

$H = h + h_{gravel} + h_{soil} + h_{surf}$

Q_{tot}: Total flow discharged.

$Q_{surface}$: Surface flow discharged

Q_{low}: Low flow orifice discharge (orifice equation with gravel depth = 0.049 cfs)

Note: Qlow = LID discharge, approved in the SWMM model, and considered as it increases total discharge

h_{gravel}:	0.5 ft	(gravel depth)
h_{soil} :	1.5 ft	(amended soil depth)
h_{surf}:	1.5 ft	(invert elevation of lowest surface outlet)
h:	Elevation measured over invert of lowest surface outlet	

A_{BMP}: BMP area: 1133 sq-ft

A_{invert}: Area of BMP at elevation of lowest surface invert

INITIAL ELEV. FOR HEC-HMS: $h_{gravel} + h_{soil} + h_{surf}$

Outlet structure for Surface Discharge of Basin D

Discharge vs Elevation Table

Lower slot

Invert:	0.00	ft
B	1.00	ft
h	0.167	ft

Notes:

(1) :Lower slot work first as a weir (water elevation < 110% of h_{slot}) and then as a rectangular orifice

(2) h measured from invert of slot

NOTE:

H = h + 3.5

H = 0.00 corresponds to elev. 697.00

Emergency Weir

Invert:	0.167	ft
B:	7.5	ft

h (ft)	Qslot-low (cfs)	Qemer (cfs)	Qsurf (cfs)
0.000	0.000		0.000
0.042	0.026		0.026
0.083	0.074		0.074
0.125	0.137		0.137
0.167	0.211	0.000	0.211
0.208	0.288	0.198	0.486
0.250	0.333	0.559	0.892
0.292	0.372	1.027	1.400
0.333	0.408	1.582	1.990
0.375	0.441	2.211	2.651
0.417	0.471	2.906	3.377
0.458	0.500	3.662	4.162
0.500	0.527	4.474	5.001

Note : Yellow columns represent diversion table to underground system.

→

HEC-HMS Information

H (ft)	Qtot (cfs)	Vol (acre-ft)	Vol (cu-ft)	
0.000	0.00000	0.0000000	0	
0.500	0.03716	0.0024610	107.2	gravel
2.000	0.03716	0.0079982	348.4	amended soil + gravel
3.500	0.03716	0.0250865	1092.8	↓ surface ponding + gravel + soil
3.542	0.06343	0.0256929	1119.2	
3.583	0.112	0.0263071	1145.9	From the "↓" point down,
3.625	0.174	0.0269292	1173.0	Surface Volume V added.
3.667	0.248	0.0275591	1200.5	$V = a \cdot h^3 + b \cdot h^2 + c \cdot h$
3.708	0.523	0.0281970	1228.3	(h the same than in surface
3.750	0.929	0.0288429	1256.4	discharge table)
3.792	1.437	0.0294968	1284.9	
3.833	2.027	0.0301588	1313.7	
3.875	2.688	0.0308290	1342.9	
3.917	3.414	0.0315073	1372.5	
3.958	4.199	0.0321940	1402.4	
4.000	5.038	0.0328889	1432.6	

DIVERSION TABLE FOR HEC-HMS

(Obtained by adding low flow to yellow columns)

Outflow	Inflow
0.000	0.000
0.0437	0.0437
0.0919	0.0919
0.1542	0.1542
0.2281	0.2281
0.3057	0.5034
0.3504	0.9096
0.3897	1.4171
0.4253	2.0071
0.4580	2.6687
0.4884	3.3945
0.5170	4.1791
0.5440	5.0183

Basin D

Elevation (ft)	Area (sq-ft)	Vol (cu-ft)
0.000	370.0	0.00
1.000	536.0	453.00
1.500	629.5	744.38
2.000	730.0	1084.25

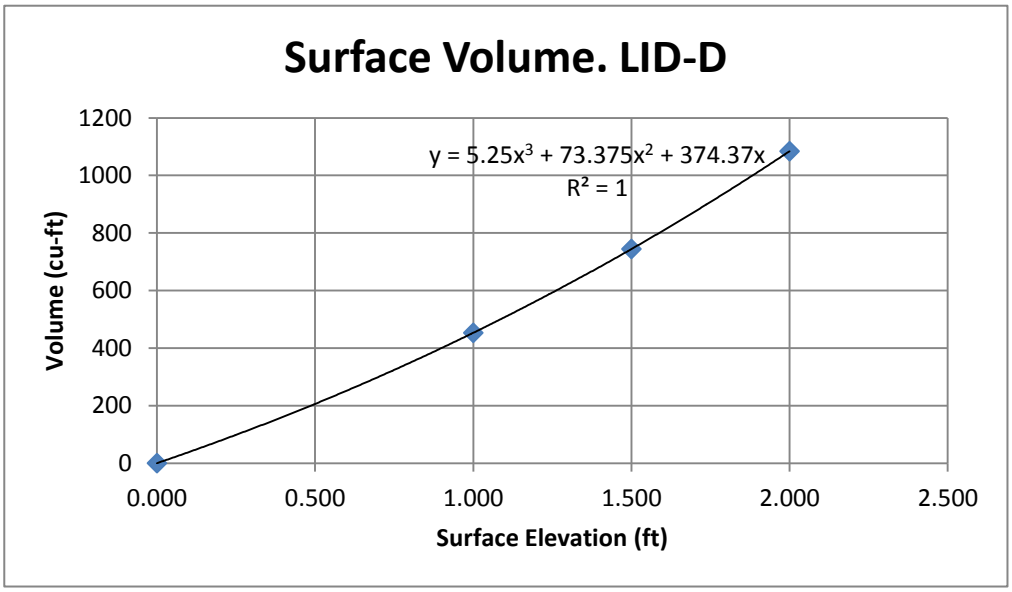

Gravel volume: A_{BMP} x 0.4 x h_{gravel}
Amended soil volume: A_{BMP} x 0.3 x h_{soil}
Surface volume below invert: (A_{bottom} + A_{invert})/2 x h_{surf}

Q_{tot} : $Q_{surface}$ + Q_{low}
H = h + h_{gravel} + h_{soil} + h_{surf}

Q_{tot}: Total flow discharged.
$Q_{surface}$: Surface flow discharged
Q_{low}: Low flow orifice discharge (orifice equation with gravel depth = 0.037 cfs)
Note: Qlow = LID discharge, approved in the SWMM model, and considered as it increases total discharge

h_{gravel}:	0.5 ft	(gravel depth)
h_{soil} :	1.5 ft	(amended soil depth)
h_{surf}:	1.5 ft	(invert elevation of lowest surface outlet)
h:	Elevation measured over invert of lowest surface outlet	

A_{BMP}: BMP area: 536 sq-ft
A_{invert}: Area of BMP at elevation of lowest surface invert

INITIAL ELEV. FOR HEC-HMS: h_{gravel} + h_{soil} + h_{surf}

Outlet structure for Discharge of Detention Basin E

Discharge vs Elevation Table

Note: H = 0 corresponds to elevation 683.25

Low orifice:	3 "	Lower Weir		
Number:	1	Invert:	2.00	ft
Cg-low:	0.62	B	1.00	ft
Middle orifice:	2.5 "			
number of orif:	12	Upper Weir		
Cg-middle:	0.62	Invert:	2.50	ft
invert elev:	1.50 ft	B:	3	ft

HEC_HMS Information:

There is no gravel or soil layers. Therefore:

(a) H =h = elevation for model

(b) Qtot = Q = flow for model (no orifice below layers of soils)

(c) Area approximately constant = 760 sq-ft (vertical walls)

(d) Volume (acre-ft) = A·H/43560

h = H (ft)	H/D-low -	H/D-mid -	Qlow-orif (cfs)	Qlow-weir (cfs)	Qtot-low (cfs)	Qmid-orif (cfs)	Qmid-weir (cfs)	Qtot-mid (cfs)	Qlow-weir (cfs)	Qup-weir (cfs)	Qtot (cfs)	Vol (acre-ft)
0.000	0.000	0.000	0.000	0.000	0.000	0.000	0.000	0.000	0.000		0.000	0.00000
0.042	0.167	0.000	0.000	0.003	0.003	0.000	0.000	0.000	0.000		0.003	0.00073
0.083	0.333	0.000	0.000	0.011	0.011	0.000	0.000	0.000	0.000		0.011	0.00145
0.125	0.500	0.000	0.000	0.024	0.024	0.000	0.000	0.000	0.000		0.024	0.00218
0.167	0.667	0.000	0.050	0.041	0.041	0.000	0.000	0.000	0.000		0.041	0.00291
0.208	0.833	0.000	0.071	0.060	0.060	0.000	0.000	0.000	0.000		0.060	0.00363
0.250	1.000	0.000	0.086	0.081	0.081	0.000	0.000	0.000	0.000		0.081	0.00436
0.292	1.167	0.000	0.100	0.103	0.100	0.000	0.000	0.000	0.000		0.100	0.00509
0.333	1.333	0.000	0.111	0.125	0.111	0.000	0.000	0.000	0.000		0.111	0.00582
0.375	1.500	0.000	0.122	0.146	0.122	0.000	0.000	0.000	0.000		0.122	0.00654
0.417	1.667	0.000	0.132	0.165	0.132	0.000	0.000	0.000	0.000		0.132	0.00727
0.458	1.833	0.000	0.141	0.182	0.141	0.000	0.000	0.000	0.000		0.141	0.00800
0.500	2.000	0.000	0.150	0.195	0.150	0.000	0.000	0.000	0.000		0.150	0.00872
0.542	2.167	0.000	0.158	0.206	0.158	0.000	0.000	0.000	0.000		0.158	0.00945
0.583	2.333	0.000	0.165	0.213	0.165	0.000	0.000	0.000	0.000		0.165	0.01018
0.625	2.500	0.000	0.173	0.217	0.173	0.000	0.000	0.000	0.000		0.173	0.01090
0.667	2.667	0.000	0.180	0.219	0.180	0.000	0.000	0.000	0.000		0.180	0.01163
0.708	2.833	0.000	0.187	0.220	0.187	0.000	0.000	0.000	0.000		0.187	0.01236
0.750	3.000	0.000	0.193	0.221	0.193	0.000	0.000	0.000	0.000		0.193	0.01309
0.792	3.167	0.000	0.199	0.223	0.199	0.000	0.000	0.000	0.000		0.199	0.01381
0.833	3.333	0.000	0.206	0.230	0.206	0.000	0.000	0.000	0.000		0.206	0.01454
0.875	3.500	0.000	0.212	0.245	0.212	0.000	0.000	0.000	0.000		0.212	0.01527
0.917	3.667	0.000	0.217	0.270	0.217	0.000	0.000	0.000	0.000		0.217	0.01599
0.958	3.833	0.000	0.223	0.310	0.223	0.000	0.000	0.000	0.000		0.223	0.01672
1.000	4.000	0.000	0.228	0.369	0.228	0.000	0.000	0.000	0.000		0.228	0.01745
1.042	4.167	0.000	0.234	0.453	0.234	0.000	0.000	0.000	0.000		0.234	0.01817
1.083	4.333	0.000	0.239	0.568	0.239	0.000	0.000	0.000	0.000		0.239	0.01890
1.125	4.500	0.000	0.244	0.721	0.244	0.000	0.000	0.000	0.000		0.244	0.01963
1.167	4.667	0.000	0.249	0.919	0.249	0.000	0.000	0.000	0.000		0.249	0.02036
1.208	4.833	0.000	0.254	1.172	0.254	0.000	0.000	0.000	0.000		0.254	0.02108
1.250	5.000	0.000	0.259	1.488	0.259	0.000	0.000	0.000	0.000	0.000	0.259	0.02181
1.292	5.167	0.000	0.264	1.877	0.264	0.000	0.000	0.000	0.000	0.000	0.264	0.02254
1.333	5.333	0.000	0.268	2.351	0.268	0.000	0.000	0.000	0.000	0.000	0.268	0.02326
1.375	5.500	0.000	0.273	2.731	0.273	0.000	0.000	0.000	0.000	0.000	0.273	0.02399
1.417	5.667	0.000	0.278	2.776	0.278	0.000	0.000	0.000	0.000	0.000	0.278	0.02472
1.458	5.833	0.000	0.282	2.820	0.282	0.000	0.000	0.000	0.000	0.000	0.282	0.02544
1.500	6.000	0.000	0.286	2.864	0.286	0.000	0.000	0.000	0.000	0.000	0.286	0.02617
1.542	6.167	0.200	0.291	2.907	0.291	0.000	0.032	0.032	0.000	0.000	0.322	0.02690
1.583	6.333	0.400	0.295	2.949	0.295	0.000	0.120	0.120	0.000	0.000	0.415	0.02762
1.625	6.500	0.600	0.299	2.991	0.299	0.294	0.255	0.255	0.000	0.000	0.554	0.02835
1.667	6.667	0.800	0.303	3.032	0.303	0.509	0.425	0.425	0.000	0.000	0.728	0.02908
1.708	6.833	1.000	0.307	3.073	0.307	0.657	0.617	0.617	0.000	0.000	0.925	0.02981
1.750	7.000	1.200	0.311	3.113	0.311	0.777	0.819	0.777	0.000	0.000	1.089	0.03053
1.792	7.167	1.400	0.315	3.153	0.315	0.881	1.017	0.881	0.000	0.000	1.197	0.03126
1.833	7.333	1.600	0.319	3.192	0.319	0.974	1.201	0.974	0.000	0.000	1.294	0.03199
1.875	7.500	1.800	0.323	3.231	0.323	1.059	1.359	1.059	0.000	0.000	1.382	0.03271
1.917	7.667	2.000	0.327	3.269	0.327	1.138	1.487	1.138	0.000	0.000	1.465	0.03344
1.958	7.833	2.200	0.331	3.307	0.331	1.211	1.579	1.211	0.000	0.000	1.542	0.03417
2.000	8.000	2.400	0.334	3.344	0.334	1.280	1.636	1.280	0.000	0.000	1.615	0.03489
2.042	8.167	2.600	0.338	3.381	0.338	1.346	1.663	1.346	0.026	0.000	1.711	0.03562
2.083	8.333	2.800	0.342	3.418	0.342	1.409	1.672	1.409	0.075	0.000	1.825	0.03635
2.125	8.500	3.000	0.345	3.454	0.345	1.469	1.678	1.469	0.137	0.000	1.951	0.03708
2.167	8.667	3.200	0.349	3.490	0.349	1.526	1.707	1.526	0.211	0.000	2.086	0.03780
2.208	8.833	3.400	0.353	3.525	0.353	1.582	1.789	1.582	0.295	0.000	2.229	0.03853
2.250	9.000	3.600	0.356	3.560	0.356	1.636	1.965	1.636	0.387	0.000	2.379	0.03926
2.292	9.167	3.800	0.360	3.595	0.360	1.688	2.285	1.688	0.488	0.000	2.535	0.03998
2.333	9.333	4.000	0.363	3.629	0.363	1.738	2.807	1.738	0.597	0.000	2.697	0.04071
2.375	9.500	4.200	0.366	3.663	0.366	1.787	3.601	1.787	0.712	0.000	2.865	0.04144
2.417	9.667	4.400	0.370	3.697	0.370	1.835	4.749	1.835	0.834	0.000	3.038	0.04216
2.458	9.833	4.600	0.373	3.731	0.373	1.881	6.345	1.881	0.962	0.000	3.216	0.04289
2.500	10.000	4.800	0.376	3.764	0.376	1.926	8.494	1.926	1.096	0.000	3.399	0.04362
2.542	10.167	5.000	0.380	3.797	0.380	1.971	11.316	1.971	1.236	0.079	3.665	0.04434
2.583	10.333	5.200	0.383	3.829	0.383	2.014	14.946	2.014	1.381	0.224	4.002	0.04507
2.625	10.500	5.400	0.386	3.862	0.386	2.056	19.532	2.056	1.532	0.411	4.385	0.04580
2.667	10.667	5.600	0.389	3.894	0.389	2.098	25.239	2.098	1.687	0.633	4.807	0.04653
2.708	10.833	5.800	0.393	3.925	0.393	2.139	32.250	2.139	1.848	0.884	5.264	0.04725
2.750	11.000	6.000	0.396	3.957	0.396	2.179	40.762	2.179	2.013	1.162	5.750	0.04798
2.792	11.167	6.200	0.399	3.988	0.399	2.218	50.993	2.218	2.184	1.465	6.265	0.04871
2.833	11.333	6.400	0.402	4.019	0.402	2.256	63.177	2.256	2.358	1.790	6.806	0.04943
2.875	11.500	6.600	0.405	4.050	0.405	2.294	77.570	2.294	2.537	2.136	7.372	0.05016
2.917	11.667	6.800	0.408	4.081	0.408	2.332	94.445	2.332	2.721	2.501	7.962	0.05089
2.958	11.833	7.000	0.411	4.111	0.411	2.368	114.100	2.368	2.908	2.886	8.573	0.05161
3.000	12.000	7.200	0.414	4.141	0.414	2.405	136.850	2.405	3.100	3.288	9.207	0.05234
3.125	12.500	7.800	0.423	4.230	0.423	2.510	227.194	2.510	3.699	4.595	11.227	0.05452
3.250	13.000	8.400	0.432	4.317	0.432	2.611	359.059	2.611	4.332	6.041	13.416	0.05670
3.375	13.500	9.000	0.440	4.403	0.440	2.708	544.948	2.708	4.998	7.612	15.759	0.05888
3.500	14.000	9.600	0.449	4.487	0.449	2.802	799.593	2.802	5.695	9.300	18.246	0.06107

UNDERGROUND PIPE

Pipe information: D: 4 ft
L: 300 ft

Sector Volume: $0.125 \cdot D^2 \cdot (\theta - \sin\theta) \cdot L$
h vs θ : $\theta = 2 \cdot \mathrm{acos}(1 - 2 \cdot h/D)$

Orifice information: d: 3 inches

* : Discharge with orifice acting as a critical depth discharge

Note: h = 0 corresponds to elevation 691.25

HEC-HMS Information

h (ft)	θ (rad)	Q (cfs)	V (acre-ft)	
0.0	0.000	0	0.00000	
0.2	0.902	0.0559	0.00162	*
0.4	1.287	0.1516	0.00450	
0.6	1.591	0.1858	0.00814	
0.8	1.855	0.2147	0.01232	
1.0	2.094	0.2401	0.01692	
1.2	2.319	0.2630	0.02184	
1.4	2.532	0.2841	0.02700	
1.6	2.739	0.3038	0.03233	
1.8	2.941	0.3222	0.03777	
2.0	3.142	0.3397	0.04327	
2.2	3.342	0.3563	0.04877	
2.4	3.544	0.3721	0.05422	
2.6	3.751	0.3873	0.05955	
2.8	3.965	0.4019	0.06471	
3.0	4.189	0.4161	0.06963	
3.2	4.429	0.4297	0.07422	
3.4	4.692	0.4430	0.07840	
3.6	4.996	0.4558	0.08204	
3.8	5.381	0.4683	0.08493	
4.0	6.283	0.4805	0.08655	

APPENDIX D:

Summary Table of Results from Coffey Engineering Study

Table A - Pre Construction Flow Characteristics

	Natural Watercouse (per Fig. 3-4)					Urban Overland (Sheet) Flow (per Fig. 3-3)						Pipe/Channel Flow			Summary			100-yr P_6 = 2.84		
Flow ID (Basin)	Watercourse distance, L (ft)	Elev. 1	Elev. 2	Change in Elevation, H (ft)	Natural watercouse duration, D_n (min)	Urban watercourse distance, **Ti** (ft) (≤ LM)	Maximum Overland Flow Length	Watercourse slope, s (%)	Runoff Coefficient, C	Initial Ttime of Concentration (per Fig. 3-2)	Overland Flow Time, **Tt** (min)	Pipe Length, L_p (ft)	Average velocity, V (fps)	Pipe travel time, T_p (min)	(5 min minimum) Total time-of-concentration, T_c (min)	Runoff Coefficient, C	Rainfall Intensity, I (in/hr)	Basin Area, A (acres)	**Q (cfs) = C*I*A**	**Storm Drain Component**
X.1	273	761	731	30	*1.37*	0	0	0.00	0.35	0.00	*0.00*	0	0.0	*0.00*	5.00	0.35	7.48	0.32	**0.85**	
X.2	253	761	704	57	*0.98*	0	0	0.00	0.48	0.00	*0.00*	0	0.0	*0.00*	5.00	0.48	7.48	0.68	**2.46**	
X.3	213	762	704	58	*0.80*	650	85	3.00	0.40	3.40	*7.15*	0	0.0	*0.00*	7.95	0.40	5.55	3.67	**8.22**	
X.1+X.2+X.3	253	761	704	57	*0.98*	680	85	2.70	0.41	3.40	*7.48*	0	0.0	*0.00*	8.46	0.41	5.33	4.67	**10.26**	Pipe PQ
Y.1	403	725	682	43	*1.87*	0	0	0.00	0.36	0.00	*0.00*	0	0.0	*0.00*	5.00	0.36	7.48	1.58	**4.27**	

Table B -UNMITIGATED Post Construction Flow Characteristics

	Natural Watercouse (per Fig. 3-4)					Urban Overland (Sheet) Flow (per Fig. 3-3)						Pipe/Channel Flow			Summary			100 -yr P_6 = 2.84		
Flow ID (Basin)	Watercourse distance, L (ft)	Elev. 1	Elev. 2	Change in Elevation, H (ft)	Natural watercouse duration, D_n (min)	Urban watercourse distance, **Ti** (ft) (≤ LM)	Maximum Overland Flow Length	Watercourse slope, s (%)	Runoff Coefficient, C	Initial Ttime of Concentration (per Fig. 3-2)	Overland Flow Time, **Tt** (min)	Pipe Length, L_p (ft)	Average velocity, V (fps)	Pipe travel time, T_p (min)	(5 min minimum) Total time-of-concentration, T_c (min)	Runoff Coefficient, C	Rainfall Intensity, I (in/hr)	Basin Area, A (acres)	**Q (cfs) = C*I*A**	**Storm Drain Component**
X.2	253	761	704	57	*0.98*	0	0	0.00	0.48	0.00	*0.00*	0	0.0	*0.00*	5.00	0.48	7.48	0.68	**2.46**	
X.1	273	761	731	30	*1.37*	0	0	0.00	0.35	0.00	*0.00*	0	0.0	*0.00*	5.00	0.35	7.48	0.32	**0.85**	
A.1	255	755	715	40	*1.14*	0	0	0.00	0.35	0.00	*0.00*	0	0.0	*0.00*	5.00	0.35	7.48	0.30	**0.79**	
A.2	244	762	734	28	*1.24*	0	0	0.00	0.35	0.00	*0.00*	0	0.0	*0.00*	5.00	0.35	7.48	0.20	**0.51**	
X.1+A.1+A.2	365	761	704	57	*1.50*	0	0	0.00	0.35	0.00	*0.00*	285	5.0	*0.95*	5.00	0.35	7.48	0.82	**2.15**	Pipe AB, BC, CD Drains into LID-C
A.3	171	746	706	40	*0.72*	0	0	0.00	0.35	0.00	*0.00*	0	0.0	*0.00*	5.00	0.35	7.48	0.16	**0.41**	Pipe FG & GH
A.4	72	748	712	36	*0.27*	0	0	0.50	0.37	0.00	*0.00*	0	0.0	*0.00*	5.00	0.37	7.48	0.20	**0.55**	
A.5				0	*0.00*	280	50	0.50	0.85	4.70	*8.37*	0	0.0	*0.00*	8.37	0.85	5.37	0.58	**2.67**	
A.3+A.4+A.5				0	*0.00*	280	50	0.50	0.67	4.70	*8.37*	440	5.0	*1.47*	9.83	0.67	4.84	0.94	**3.02**	Into LID B, out of Pipe HI & IT to Basin E
B.1	263	725	695	30	*1.32*	0	0	0.00	0.35	0.00	*0.00*	0	0.0	*0.00*	5.00	0.35	7.48	0.27	**0.71**	
B.4	215	711.5	687.5	24	*1.14*	0	0	0.00	0.35	0.00	*0.00*	0	0.0	*0.00*	5.00	0.35	7.48	0.19	**0.50**	
B.1+B.4	415	725	687.5	37.5	*2.04*	0	0	0.00	0.35	0.00	*0.00*	0	0.0	*0.00*	5.00	0.35	7.48	0.46	**1.20**	
B.2	0			0	*0.00*	297	90	4.20	0.75	2.90	*4.30*	0	0.0	*0.00*	5.00	0.75	7.48	0.37	**2.07**	
B.3	107	695	687	8	*0.77*	0	0	0.00	0.64	0.00	*0.00*	0	0.0	*0.00*	5.00	0.64	7.48	0.14	**0.67**	Pipe KL
B.1+B.2+B.3+ B.4	0			0	*0.00*	297	90	4.20	0.54	2.90	*4.30*	12	4.8	*0.04*	5.00	0.54	7.48	0.97	**3.94**	Pipe UV Drains from LID-F/A to Basin E
C.1				0	*0.00*	296	85	3.00	0.86	3.40	*5.03*	86	7.1	*0.20*	5.23	0.86	7.27	0.34	**2.12**	Pipe RE Drains from LID-D to LID-C
C.2				0	*0.00*	390	85	2.00	0.81	3.40	*6.02*	0	0.0	*0.00*	6.02	0.81	6.64	0.74	**4.00**	
X.1+A.1+A.2+ C.1+C.2				0	*0.00*	390	85	2.00	0.62	3.40	*6.02*	91	8.7	*0.17*	6.20	0.62	6.52	1.90	**7.70**	Pipe ET Drains from LID-C to Basin E
D.1	339	763	721	42	*1.55*	0	0	0.00	0.35	0.00	*0.00*	0	0.0	*0.00*	5.00	0.35	7.48	0.48	**1.25**	
D.2	35	726	720	6	*0.24*	0	0	0.00	0.35	0.00	*0.00*	0	0.0	*0.00*	5.00	0.35	7.48	0.23	**0.59**	
D.3				0	*0.00*	720	85	3.00	0.79	3.40	*7.53*	0	0.0	*0.00*	7.53	0.79	5.75	0.94	**4.28**	
X.2	253	761	704	57	*0.98*	0	0	0.00	0.48	0.00	*0.00*	0	0.0	*0.00*	5.00	0.48	7.48	0.68	**2.46**	
D.1+D.2+D.3+X.2	275	763	721	42	*1.22*	720	85	3.00	0.57	3.40	*7.53*	0	0.0	*0.00*	8.75	0.57	5.22	2.32	**6.88**	Pipe NO
X+A+B+C+D.1 thru D.3				0	*0.00*	280	50	0.50	0.60	4.70	*8.37*	440	5.0	*1.47*	9.83	0.60	4.84	6.13	**17.67**	Pipe JP & PQ
D.4				0	*0.00*	170	85	3.00	0.90	3.40	*4.11*	0	0.0	*0.00*	5.00	0.90	7.48	0.12	**0.78**	

Table A - Pre Construction Flow Characteristics

	Natural Watercouse (per Fig. 3-4)					Urban Overland (Sheet) Flow (per Fig. 3-3)						Pipe/Channel Flow			Summary			100-yr P_6 = 2.84		
Flow ID (Basin)	Watercourse distance, L (ft)	Elev. 1	Elev. 2	Change in Elevation, H (ft)	Natural watercouse duration, D_n (min)	Urban watercourse distance, **Ti** (ft) (≤ LM)	Maximum Overland Flow Length	Watercourse slope, s (%)	Runoff Coefficient, C	Initial Ttime of Concentration (per Fig. 3-2)	Overland Flow Time, **Tt** (min)	Pipe Length, L_p (ft)	Average velocity, V (fps)	Pipe travel time, T_p (min)	(5 min minimum) Total time-of-concentration, T_c (min)	Runoff Coefficient, C	Rainfall Intensity, I (in/hr)	Basin Area, A (acres)	**Q (cfs) = C*I*A**	**Storm Drain Component**
X.1	273	761	731	30	1.37	0	0	0.00	0.35	0.00	0.00	0	0.0	0.00	5.00	0.35	7.48	0.32	0.85	
X.2	253	761	704	57	0.98	0	0	0.00	0.48	0.00	0.00	0	0.0	0.00	5.00	0.48	7.48	0.68	2.46	
X.3	213	762	704	58	0.80	650	85	3.00	0.40	3.40	7.15	0	0.0	0.00	7.95	0.40	5.55	3.67	8.22	
X.1+X.2+X.3	253	761	704	57	0.98	680	85	2.70	0.41	3.40	7.48	0	0.0	0.00	8.46	0.41	5.33	4.67	10.26	Pipe PQ
Y.1	403	725	682	43	1.87	0	0	0.00	0.36	0.00	0.00	0	0.0	0.00	5.00	0.36	7.48	1.58	4.27	

Table B -UNMITIGATED Post Construction Flow Characteristics

	Natural Watercouse (per Fig. 3-4)					Urban Overland (Sheet) Flow (per Fig. 3-3)						Pipe/Channel Flow			Summary			100 -yr P_6 = 2.84		
Flow ID (Basin)	Watercourse distance, L (ft)	Elev. 1	Elev. 2	Change in Elevation, H (ft)	Natural watercouse duration, D_n (min)	Urban watercourse distance, **Ti** (ft) (≤ LM)	Maximum Overland Flow Length	Watercourse slope, s (%)	Runoff Coefficient, C	Initial Ttime of Concentration (per Fig. 3-2)	Overland Flow Time, **Tt** (min)	Pipe Length, L_p (ft)	Average velocity, V (fps)	Pipe travel time, T_p (min)	(5 min minimum) Total time-of-concentration, T_c (min)	Runoff Coefficient, C	Rainfall Intensity, I (in/hr)	Basin Area, A (acres)	**Q (cfs) = C*I*A**	**Storm Drain Component**
X.2	253	761	704	57	0.98	0	0	0.00	0.48	0.00	0.00	0	0.0	0.00	5.00	0.48	7.48	0.68	2.46	
X.1	273	761	731	30	1.37	0	0	0.00	0.35	0.00	0.00	0	0.0	0.00	5.00	0.35	7.48	0.32	0.85	
A.1	255	755	715	40	1.14	0	0	0.00	0.35	0.00	0.00	0	0.0	0.00	5.00	0.35	7.48	0.30	0.79	
A.2	244	762	734	28	1.24	0	0	0.00	0.35	0.00	0.00	0	0.0	0.00	5.00	0.35	7.48	0.20	0.51	
X.1+A.1+A.2	365	761	704	57	1.50	0	0	0.00	0.35	0.00	0.00	285	5.0	0.95	5.00	0.35	7.48	0.82	2.15	Pipe AB, BC, CD Drains into LID-C
A.3	171	746	706	40	0.72	0	0	0.00	0.35	0.00	0.00	0	0.0	0.00	5.00	0.35	7.48	0.16	0.41	Pipe FG & GH
A.4	72	748	712	36	0.27	0	0	0.50	0.37	0.00	0.00	0	0.0	0.00	5.00	0.37	7.48	0.20	0.55	
A.5				0	0.00	280	50	0.50	0.85	4.70	8.37	0	0.0	0.00	8.37	0.85	5.37	0.58	2.67	
A.3+A.4+A.5				0	0.00	280	50	0.50	0.67	4.70	8.37	440	5.0	1.47	9.83	0.67	4.84	0.94	3.02	Into LID B, out of Pipe HI & IT to Basin E
B.1	263	725	695	30	1.32	0	0	0.00	0.35	0.00	0.00	0	0.0	0.00	5.00	0.35	7.48	0.27	0.71	
B.4	215	711.5	687.5	24	1.14	0	0	0.00	0.35	0.00	0.00	0	0.0	0.00	5.00	0.35	7.48	0.19	0.50	
B.1+B.4	415	725	687.5	37.5	2.04	0	0	0.00	0.35	0.00	0.00	0	0.0	0.00	5.00	0.35	7.48	0.46	1.20	
B.2	0			0	0.00	297	90	4.20	0.75	2.90	4.30	0	0.0	0.00	5.00	0.75	7.48	0.37	2.07	
B.3	107	695	687	8	0.77	0	0	0.00	0.64	0.00	0.00	0	0.0	0.00	5.00	0.64	7.48	0.14	0.67	Pipe KL
B.1+B.2+B.3+ B.4	0			0	0.00	297	90	4.20	0.54	2.90	4.30	12	4.8	0.04	5.00	0.54	7.48	0.97	3.94	Pipe UV Drains from LID-F/A to Basin E
C.1				0	0.00	296	85	3.00	0.86	3.40	5.03	86	7.1	0.20	5.23	0.86	7.27	0.34	2.12	Pipe RE Drains from LID-D to LID-C
C.2				0	0.00	390	85	2.00	0.81	3.40	6.02	0	0.0	0.00	6.02	0.81	6.64	0.74	4.00	
X.1+A.1+A.2+ C.1+C.2				0	0.00	390	85	2.00	0.62	3.40	6.02	91	8.7	0.17	6.20	0.62	6.52	1.90	7.70	Pipe ET Drains from LID-C to Basin E
D.1	339	763	721	42	1.55	0	0	0.00	0.35	0.00	0.00	0	0.0	0.00	5.00	0.35	7.48	0.48	1.25	
D.2	35	726	720	6	0.24	0	0	0.00	0.35	0.00	0.00	0	0.0	0.00	5.00	0.35	7.48	0.23	0.59	
D.3				0	0.00	720	85	3.00	0.79	3.40	7.53	0	0.0	0.00	7.53	0.79	5.75	0.94	4.28	
X.2	253	761	704	57	0.98	0	0	0.00	0.48	0.00	0.00	0	0.0	0.00	5.00	0.48	7.48	0.68	2.46	
D.1+D.2+D.3+X.2	275	763	721	42	1.22	720	85	3.00	0.57	3.40	7.53	0	0.0	0.00	8.75	0.57	5.22	2.32	6.88	Pipe NO
X+A+B+C+D.1 thru D.3				0	0.00	280	50	0.50	0.60	4.70	8.37	440	5.0	1.47	9.83	0.60	4.84	6.13	17.67	Pipe JP & PQ
D.4				0	0.00	170	85	3.00	0.90	3.40	4.11	0	0.0	0.00	5.00	0.90	7.48	0.12	0.78	

LID B
3.02 cfs if I = 4.84 in/hr
3.35 cfs if I = 5.37 in/hr

LID A+F

LID D
2.12 cfs if I = 7.27 in/hr
2.17 cfs if I = 7.45 in/hr

LID C
7.70 cfs if I = 6.52 in/hr
7.84 cfs if I = 6.64 in/hr

Basin E.

APPENDIX E:

HEC-HMS Results

Reservoir A

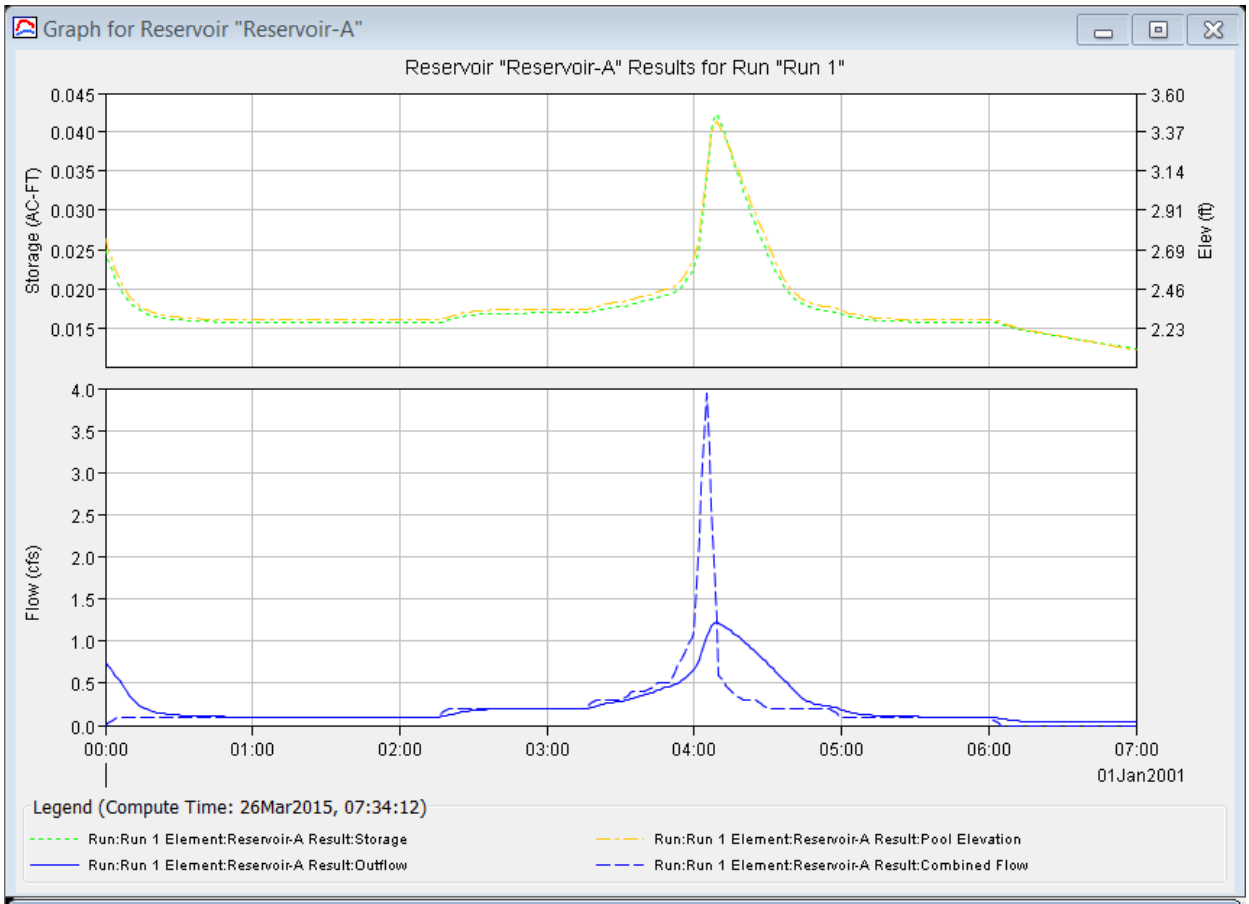
Graph for Reservoir "Reservoir-A"
Reservoir "Reservoir-A" Results for Run "Run 1"
Storage (AC-FT)
0.045
0.040
0.035
0.030
0.025
0.020
0.015
Elev (ft)
3.60
3.37
3.14
2.91
2.69
2.46
2.23
Flow (cfs)
4.0
3.5
3.0
2.5
2.0
1.5
1.0
0.5
0.0
00:00
01:00
02:00
03:00
04:00
05:00
06:00
07:00
01Jan2001
Legend (Compute Time: 26Mar2015, 07:34:12)
Run:Run 1 Element:Reservoir-A Result:Storage
Run:Run 1 Element:Reservoir-A Result:Pool Elevation
Run:Run 1 Element:Reservoir-A Result:Outflow
Run:Run 1 Element:Reservoir-A Result:Combined Flow

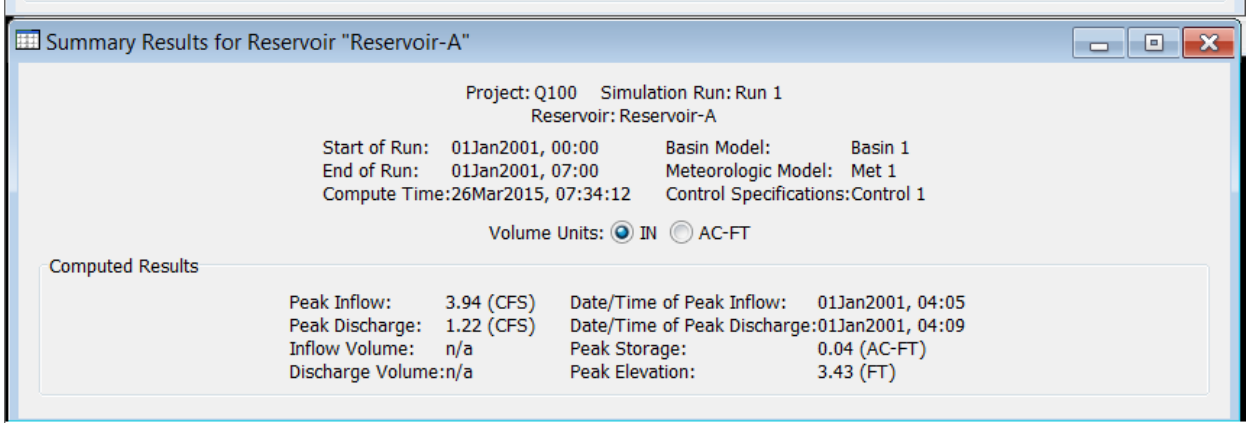
Summary Results for Reservoir "Reservoir-A"
Project: Q100 Simulation Run: Run 1
Reservoir: Reservoir-A
Start of Run: 01Jan2001, 00:00
End of Run: 01Jan2001, 07:00
Compute Time: 26Mar2015, 07:34:12
Basin Model: Basin 1
Meteorologic Model: Met 1
Control Specifications: Control 1
Volume Units: IN AC-FT
Computed Results
Peak Inflow: 3.94 (CFS)
Peak Discharge: 1.22 (CFS)
Inflow Volume: n/a
Discharge Volume: n/a
Date/Time of Peak Inflow: 01Jan2001, 04:05
Date/Time of Peak Discharge: 01Jan2001, 04:09
Peak Storage: 0.04 (AC-FT)
Peak Elevation: 3.43 (FT)

Reservoir B

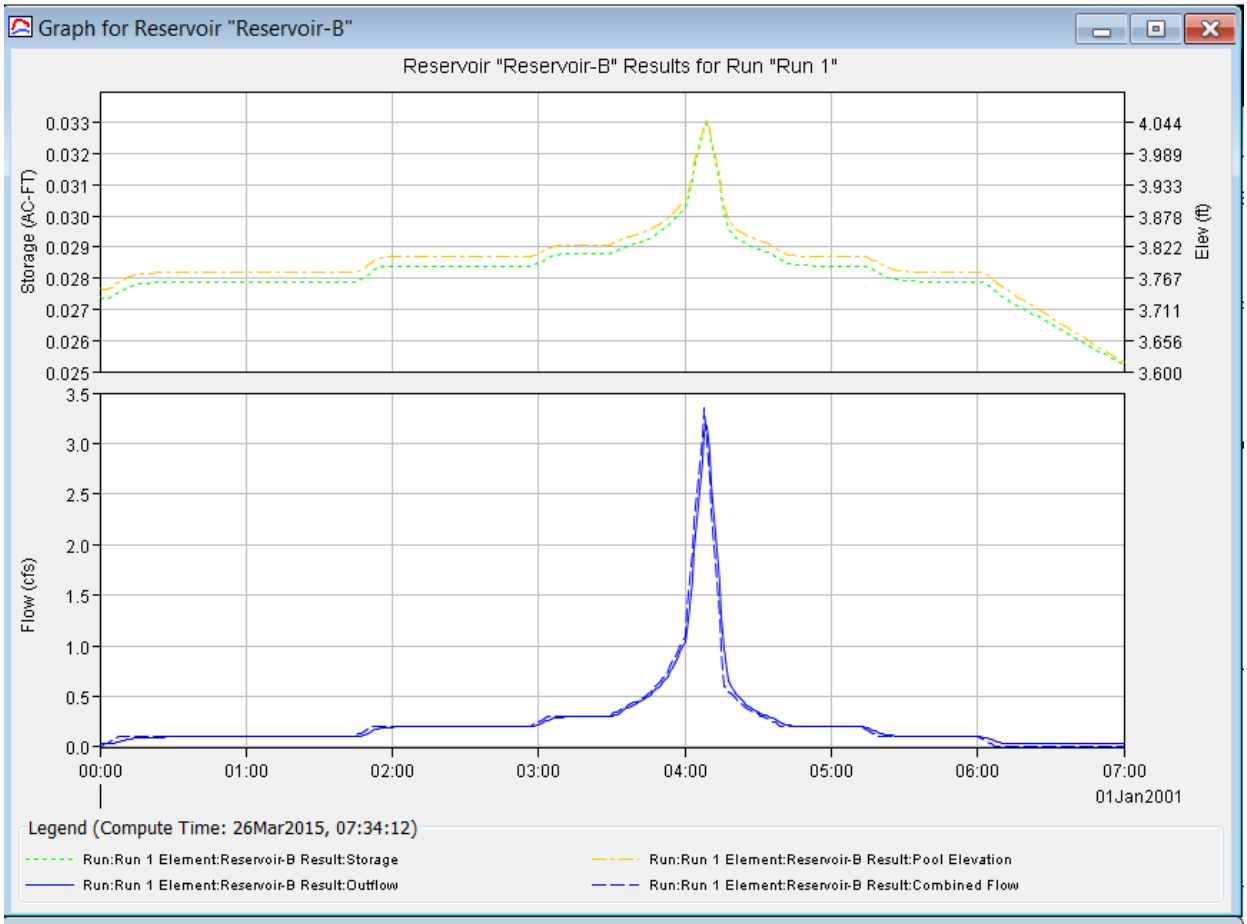

Summary Results for Reservoir "Reservoir-B"

Project: Q100 Simulation Run: Run 1
Reservoir: Reservoir-B

Start of Run:	01Jan2001, 00:00	Basin Model:	Basin 1
End of Run:	01Jan2001, 07:00	Meteorologic Model:	Met 1
Compute Time:	26Mar2015, 07:34:12	Control Specifications:	Control 1

Volume Units: (•) IN ( ) AC-FT

Computed Results

Peak Inflow:	3.35 (CFS)	Date/Time of Peak Inflow:	01Jan2001, 04:08
Peak Discharge:	3.17 (CFS)	Date/Time of Peak Discharge:	01Jan2001, 04:09
Inflow Volume:	n/a	Peak Storage:	0.03 (AC-FT)
Discharge Volume:	n/a	Peak Elevation:	4.05 (FT)

Reservoir C

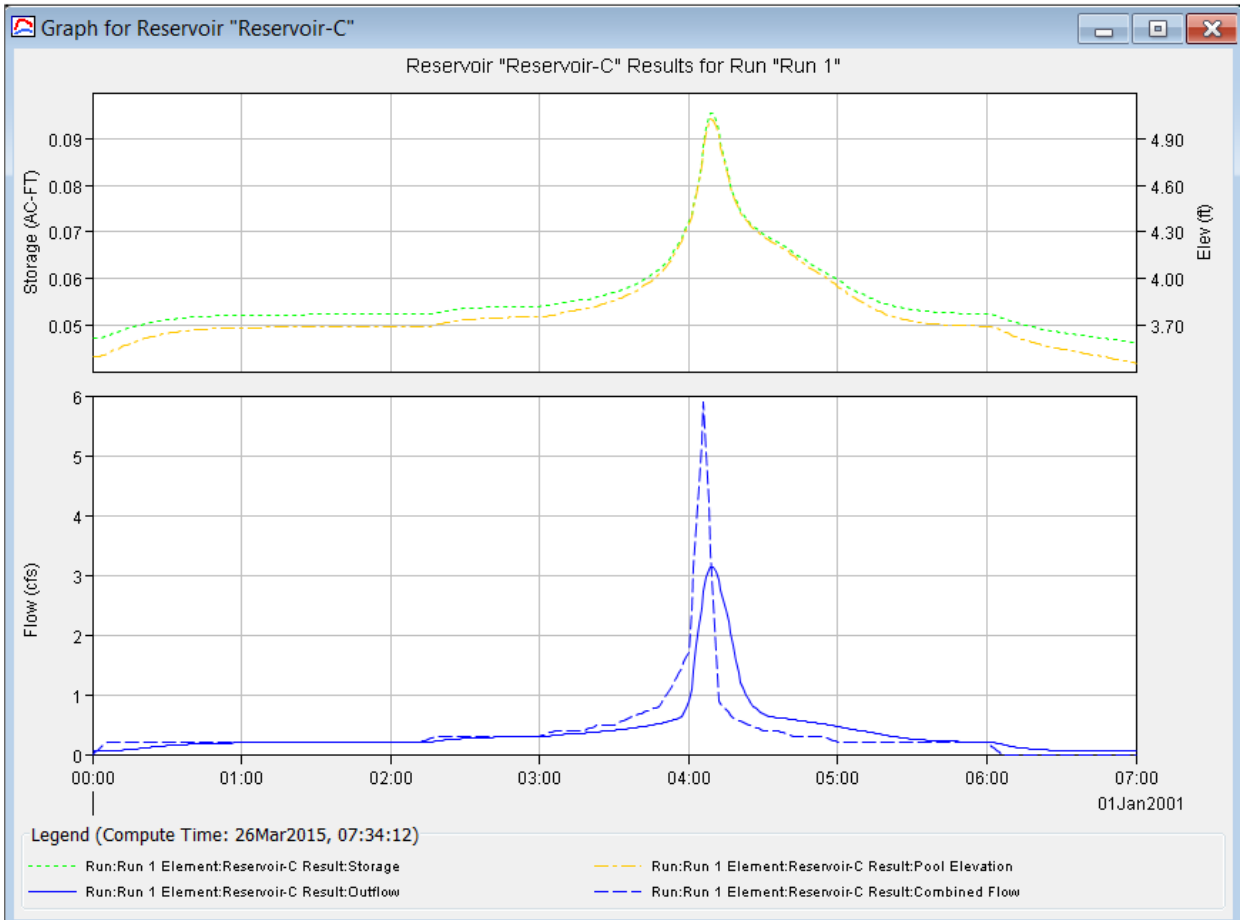

Summary Results for Reservoir "Reservoir-C"

Project: Q100 Simulation Run: Run 1
Reservoir: Reservoir-C

Start of Run:	01Jan2001, 00:00	Basin Model:	Basin 1
End of Run:	01Jan2001, 07:00	Meteorologic Model:	Met 1
Compute Time:	26Mar2015, 07:34:12	Control Specifications:	Control 1

Volume Units: (•) IN ( ) AC-FT

Computed Results

Peak Inflow:	5.90 (CFS)	Date/Time of Peak Inflow:	01Jan2001, 04:06
Peak Discharge:	3.14 (CFS)	Date/Time of Peak Discharge:	01Jan2001, 04:09
Inflow Volume:	n/a	Peak Storage:	0.10 (AC-FT)
Discharge Volume:	n/a	Peak Elevation:	5.03 (FT)

Reservoir D

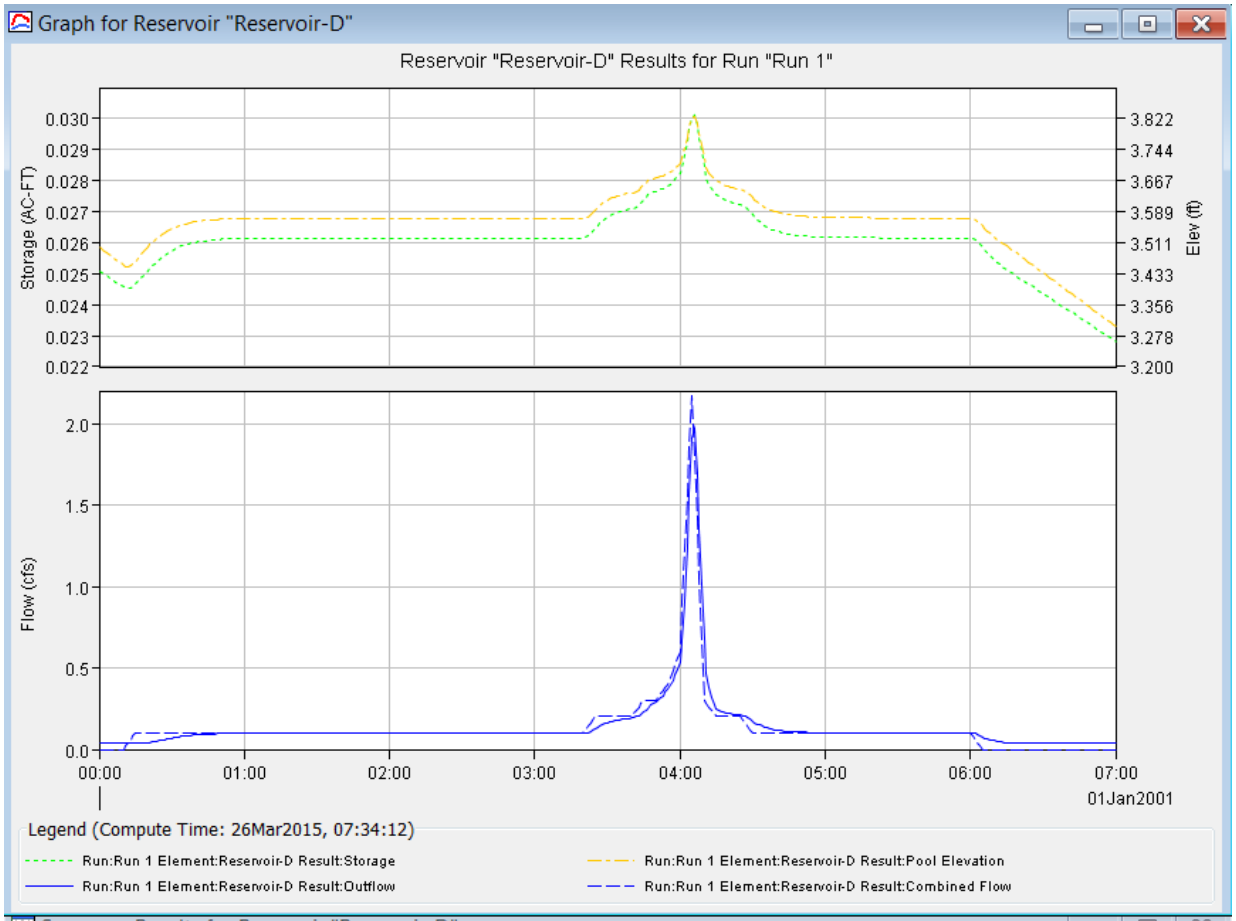

Summary Results for Reservoir "Reservoir-D"

Project: Q100 Simulation Run: Run 1
Reservoir: Reservoir-D

Start of Run:	01Jan2001, 00:00	Basin Model:	Basin 1
End of Run:	01Jan2001, 07:00	Meteorologic Model:	Met 1
Compute Time:	26Mar2015, 07:34:12	Control Specifications:	Control 1

Volume Units: (●) IN ( ) AC-FT

Computed Results

Peak Inflow:	2.17 (CFS)	Date/Time of Peak Inflow:	01Jan2001, 04:05
Peak Discharge:	1.97 (CFS)	Date/Time of Peak Discharge:	01Jan2001, 04:06
Inflow Volume:	n/a	Peak Storage:	0.03 (AC-FT)
Discharge Volume:	n/a	Peak Elevation:	3.83 (FT)

Diversion B

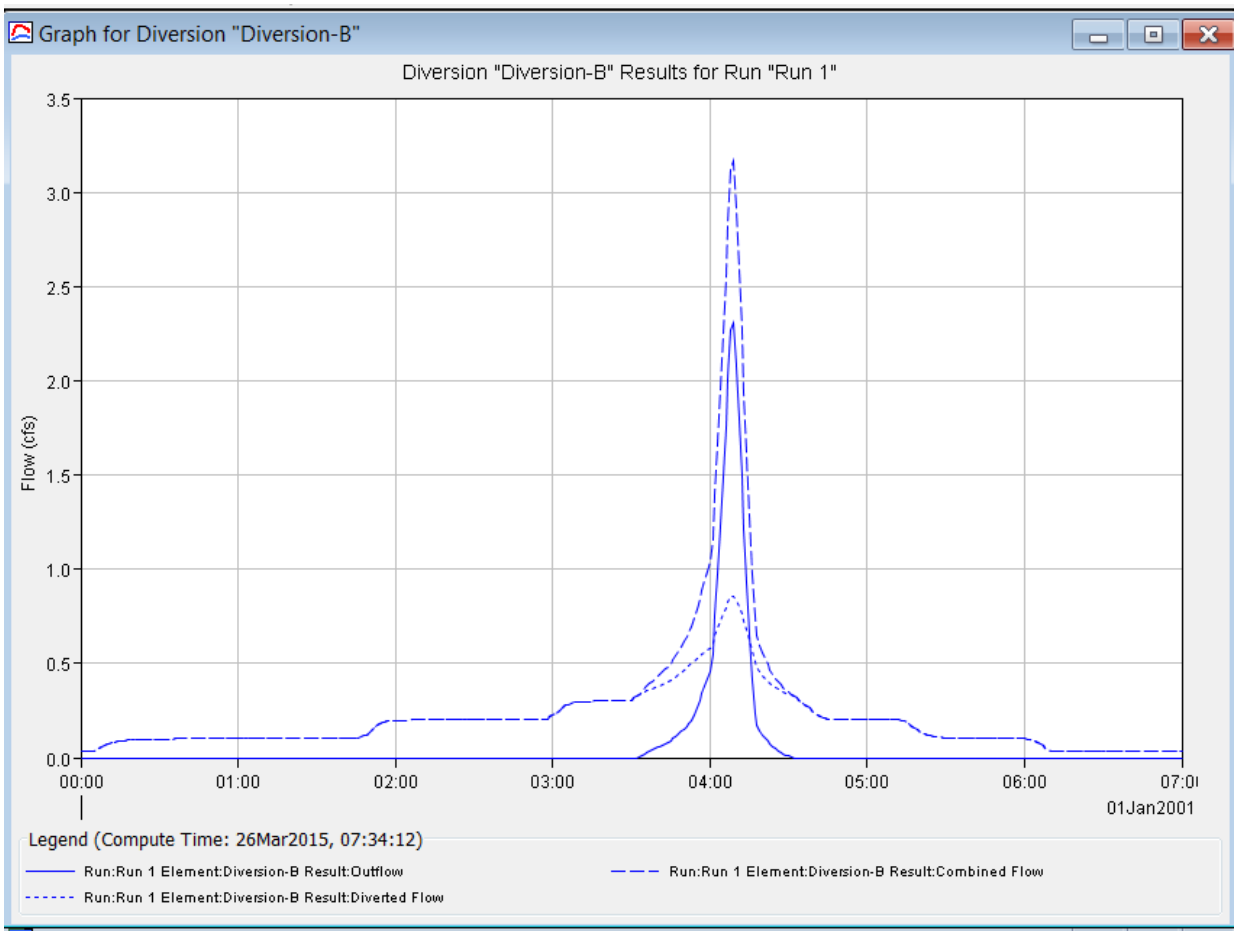

Summary Results for Diversion "Diversion-B"

Project: Q100 Simulation Run: Run 1
Diversion: Diversion-B

Start of Run:	01Jan2001, 00:00	Basin Model:	Basin 1
End of Run:	01Jan2001, 07:00	Meteorologic Model:	Met 1
Compute Time:	26Mar2015, 07:34:12	Control Specifications:	Control 1

Volume Units: (•) IN ( ) AC-FT

Computed Results

Peak Inflow:	3.17 (CFS)	Date/Time of Peak Inflow:	01Jan2001, 04:09
Peak Discharge:	2.31 (CFS)	Date/Time of Peak Discharge:	01Jan2001, 04:09
Peak Diversion:	0.86 (CFS)	Date/Time of Peak Diversion:	01Jan2001, 04:09
Inflow Volume:	n/a		
Discharge Volume:	n/a	Diversion Volume:	n/a

Diversion C

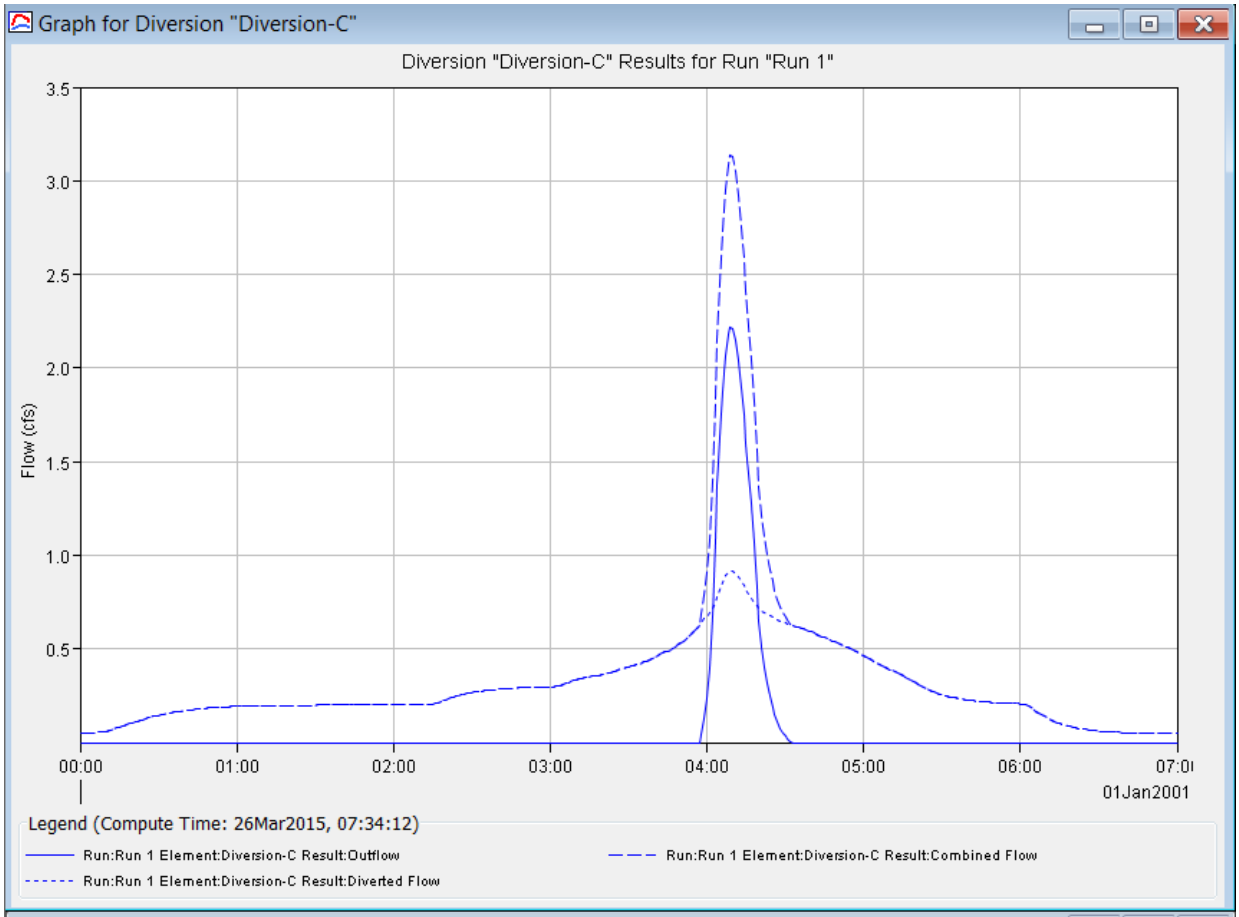

Summary Results for Diversion "Diversion-C"

Project: Q100 Simulation Run: Run 1
Diversion: Diversion-C

Start of Run:	01Jan2001, 00:00	Basin Model:	Basin 1
End of Run:	01Jan2001, 07:00	Meteorologic Model:	Met 1
Compute Time:	26Mar2015, 07:34:12	Control Specifications:	Control 1

Volume Units: (•) IN ( ) AC-FT

Computed Results

Peak Inflow:	3.14 (CFS)	Date/Time of Peak Inflow:	01Jan2001, 04:09
Peak Discharge:	2.22 (CFS)	Date/Time of Peak Discharge:	01Jan2001, 04:09
Peak Diversion:	0.92 (CFS)	Date/Time of Peak Diversion:	01Jan2001, 04:09
Inflow Volume:	n/a		
Discharge Volume:	n/a	Diversion Volume:	n/a

Diversion D

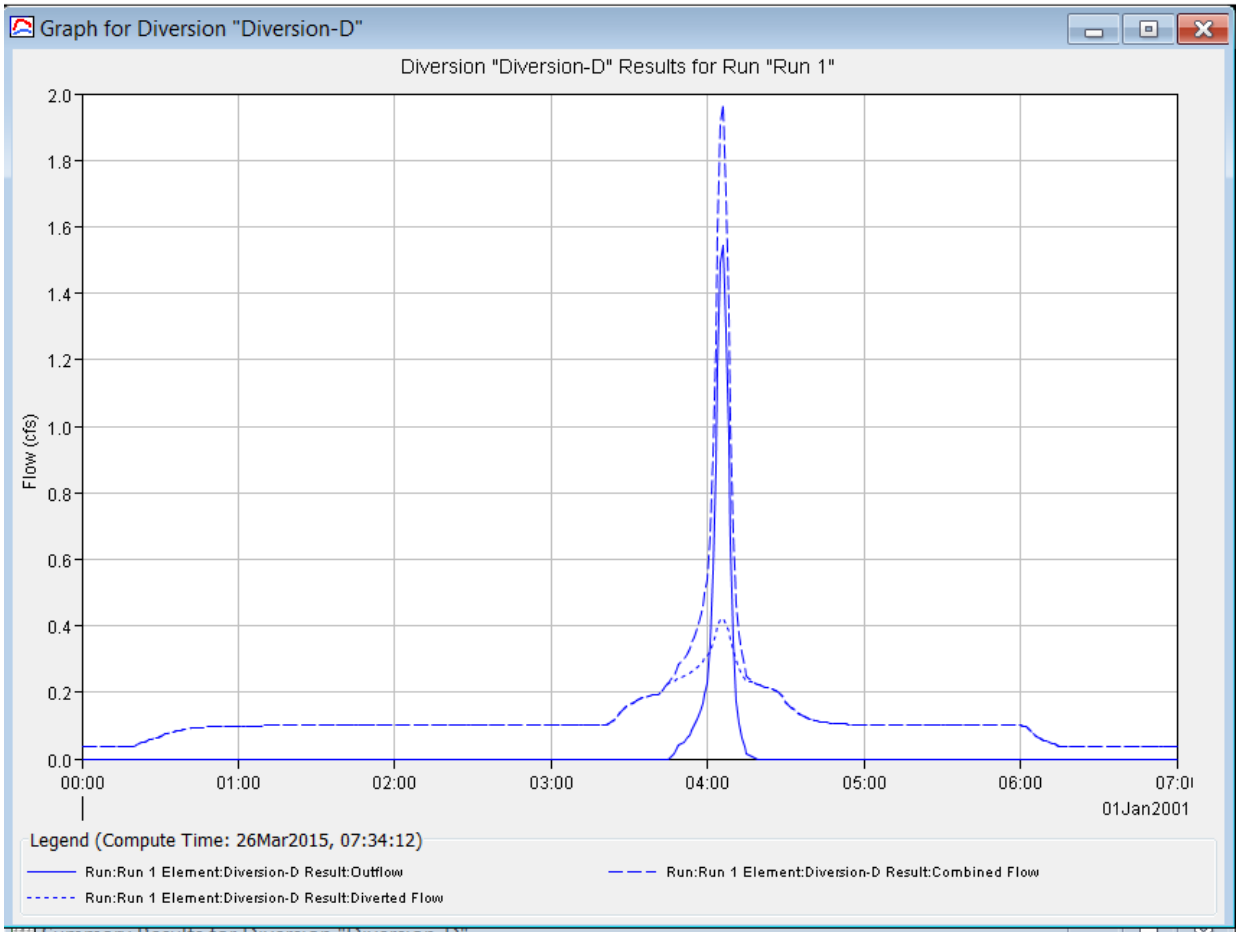

Summary Results for Diversion "Diversion-D"

Project: Q100 Simulation Run: Run 1
Diversion: Diversion-D

Start of Run:	01Jan2001, 00:00	Basin Model:	Basin 1
End of Run:	01Jan2001, 07:00	Meteorologic Model:	Met 1
Compute Time:	26Mar2015, 07:34:12	Control Specifications:	Control 1

Volume Units: (•) IN ( ) AC-FT

Computed Results

Peak Inflow:	1.97 (CFS)	Date/Time of Peak Inflow:	01Jan2001, 04:06
Peak Discharge:	1.54 (CFS)	Date/Time of Peak Discharge:	01Jan2001, 04:06
Peak Diversion:	0.42 (CFS)	Date/Time of Peak Diversion:	01Jan2001, 04:06
Inflow Volume:	n/a		
Discharge Volume:	n/a	Diversion Volume:	n/a

Res-Under (Underground Pipe)

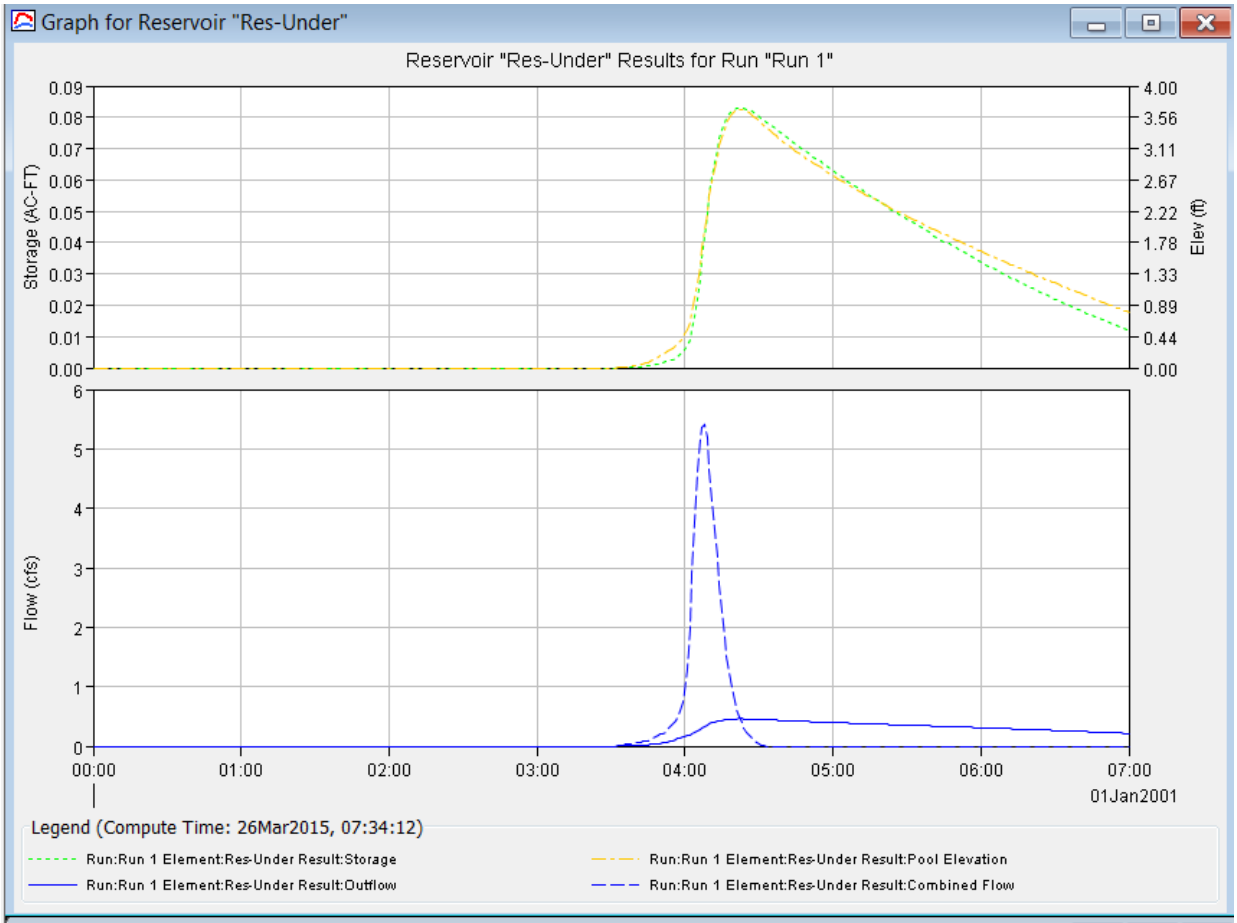

Summary Results for Reservoir "Res-Under"

Project: Q100 Simulation Run: Run 1
Reservoir: Res-Under

Start of Run:	01Jan2001, 00:00	Basin Model:	Basin 1
End of Run:	01Jan2001, 07:00	Meteorologic Model:	Met 1
Compute Time:	26Mar2015, 07:34:12	Control Specifications:	Control 1

Volume Units: (•) IN ( ) AC-FT

Computed Results

Peak Inflow:	5.41 (CFS)	Date/Time of Peak Inflow:	01Jan2001, 04:08
Peak Discharge:	0.46 (CFS)	Date/Time of Peak Discharge:	01Jan2001, 04:22
Inflow Volume:	n/a	Peak Storage:	0.08 (AC-FT)
Discharge Volume:	n/a	Peak Elevation:	3.67 (FT)

Reservoir E

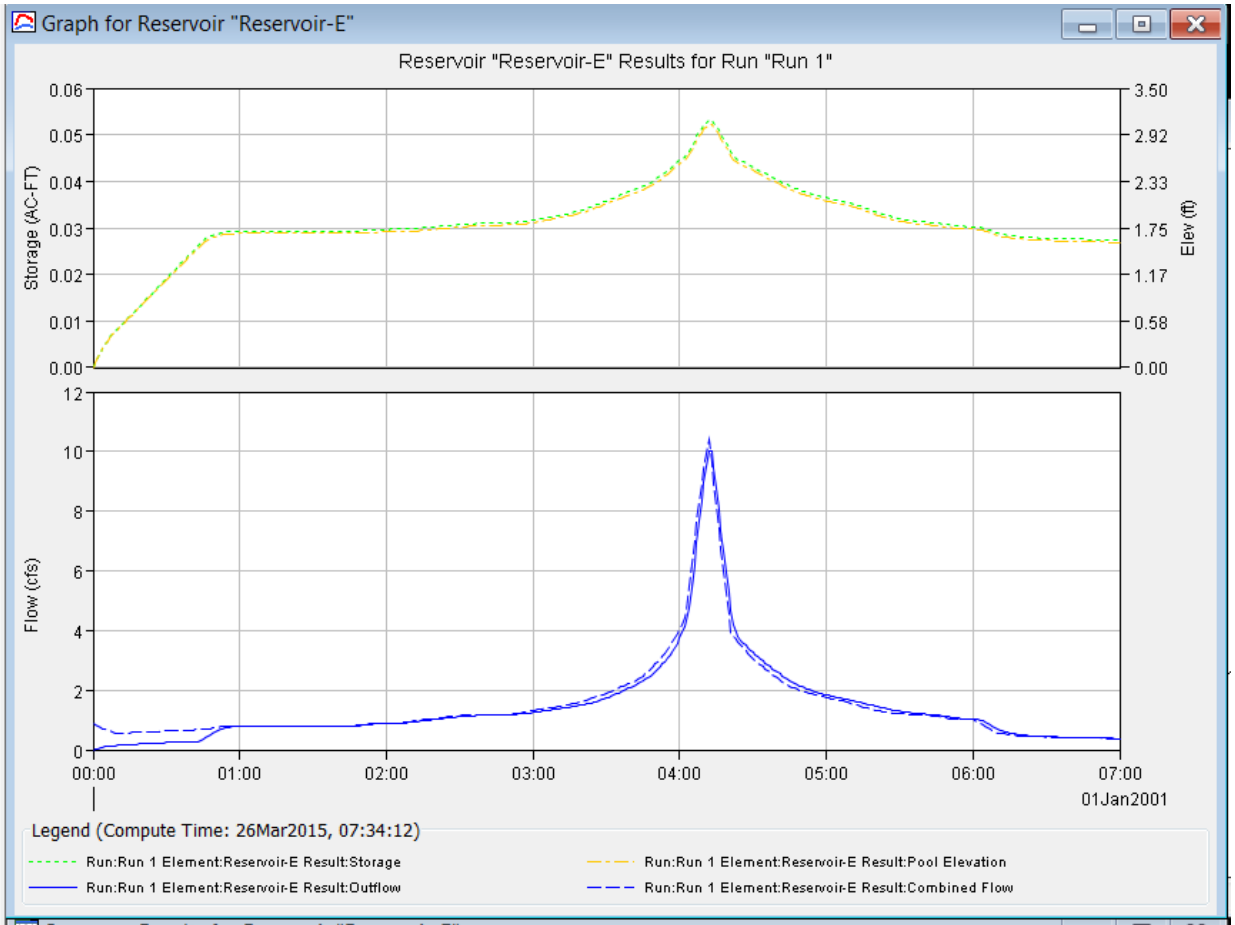

Summary Results for Reservoir "Reservoir-E"

Project: Q100 Simulation Run: Run 1
Reservoir: Reservoir-E

Start of Run:	01Jan2001, 00:00	Basin Model:	Basin 1
End of Run:	01Jan2001, 07:00	Meteorologic Model:	Met 1
Compute Time:	26Mar2015, 07:34:12	Control Specifications:	Control 1

Volume Units: (•) IN ( ) AC-FT

Computed Results

Peak Inflow:	10.38 (CFS)	Date/Time of Peak Inflow:	01Jan2001, 04:12
Peak Discharge:	10.01 (CFS)	Date/Time of Peak Discharge:	01Jan2001, 04:13
Inflow Volume:	n/a	Peak Storage:	0.05 (AC-FT)
Discharge Volume:	n/a	Peak Elevation:	3.05 (FT)

APPENDIX F:

Response to Comments prepared by
Dpt. of Public Works, Flood Control, 3/19/2015

County of San Diego

Department of Public Works, Flood Control

RE: HSC LAKESIDE FLOOD CONTROL REVIEW (HYDROLOGY COMPLIANCE WITH MANUAL ONLY)

For the next submittal include a separate document which addresses each of the comments provided.

REVIEW COMMENTS:

Previous comments that have not been addressed sufficiently:

1. **Due to the magnitude of the comments a full review could not be performed.**

   Response: Methodology will be changed to HEC-HMS to allow the County to perform a full review.

2. To clarify the guidance previously provided: the areas tributary to detention need to have their hydrology calculated following the Hydrology Manual independent of the SWMM program. This has already been done in the previous reports, and it will be included in the new report dated March 25, 2015.

   The results can then be converted to hydrographs using Rat Hydro. This step has also been performed in the previous report, and also included in the new 3/30/2015 report.

   The hydrograph can then be entered into SWMM for detention routing. Comparisons of result to those obtained following the required methodology are not sufficient. **It needs to be clarified what the exact processes are that are being performed in SWMM to ensure that only storage routing calculations as defined in the Hydraulic Design Manual (HDM) are included. The text lists "LID portion" calculations**

that should not be included in 100-year peak flow calculations for detention basins. More information is provided below.

Project proponent is no longer using SWMM to expedite review. This comment is no longer applicable.

3. Detailed, clear explanations need to be provided to explain all of the steps taken and how results were obtained. **The exact processes being performed by the SWMM model need to be described. This should include a detailed description of the processes involved with each node on the SWMM schematic, as well as a definition of each of the names. It should also clarify how the diverted flow is combined and routed through the detention pipe.**

   Project is no longer using SWMM for Q_{100} routing. Comment not applicable

4. Topo needs to be included for the eastern half of basin X2, which appears to currently include hatching that resembles contours. **The response states that topo was included, but it could not be located on the exhibits provided.**

   The reviewer should be aware of the following issues:

   (a) Sub-basin X.2 is not part of the project area, and the topography is an approximation (accurate only to a portion of the sub-area). Drainage boundaries are also approximate from the topography, a site visit and Quad Maps from USGS.

   (b) X.2 maximum and minimum elevation and longest waterpath have been determined with relative precision. Impervious percentage is accurate. Time of concentration and peak flows from this sub-area are therefore relatively accurate.

(c) X.2 does not change between pre and post-development conditions
(d) X.2 was included in the analysis because it will drain to Basin E in post-development conditions and the designers wanted to be sure that the outlet structure of basin E could handle the entire peak flow draining to it.

Per the previous explanations, the precise topography of X.2 is not necessary. It would have been included had it been obtained from the initial topographic analysis, but the extent of the precise topography is the one shown in Appendix A. However, calculations derived from the information obtained are sufficient for the purpose of design of Basin E and for the purpose of demonstrated reduction of the 100-year peak flow being discharged by such basin.

5. Detailed plans of the underground detention and any required diversion structure need to be included and thoroughly explained in the text.

Details of the outlet structures are included in the new report, and were included in the previous report. Only Basin A and E were missing because there was no diversion structure attached to those outlets and those outlet structures were included in the Hydromodification Report. However, for sake of completeness, structures A and E will be included in this 3/30/2015 report, and all details will be also included in the grading plans.

In regards to the details of the underground system, additional information and plans are included from the grading plan prepared by Coffey Engineering.

6. Volume below the lowest invert of the outlet works of detention facilities should not be included in detention analyses. **This comment is referring to the subsurface LID portion of each basin below the ground surface. Voids and drains below ground included for water quality purposes should not be included in peak 100-year detention analyses (see HDM section 6.2.7).**

   LID portion is not part of the new HEC-HMS model. Comment no longer applies. Lowest elevation of HEC-HMS is equal to invert elevation of surface outlet, and volume below this level is larger than WQ volume and not considered for flood mitigation. However, reviewer should be aware that discharge of the low flow orifice is considered for LIDs A+F, B, C and D because addition of such discharge (that would exist during the worst 6 hours of a 100-year event) increases slightly the total peak flow downstream and the most conservative approach consists in including such discharge.

7. SWMM analyses were not reviewed and need to be reviewed by staff or consultant familiar with SWMM analyses.

   Comment no longer applies as SWMM is no longer used.

Additional comments based on new/revised information:

1. Basins A and F are separate basins, but they are analyzed as one. Please justify or revise.

   Justification has been provided in the new report, section 3.2. Both basins are hydraulically connected at two levels: at surface level and at French-

drain level; in addition, both basins have only one outlet structure; therefore, they act hydraulically as one. See section 3.2 for further details.

2. Outlet plans for all basins (including Basin A) need to be included.

   Most outlet structures were included in previous report, and will be included in the new report. Missing outlet structures for A+F and E (that were originally included in the hydromodification report) will now be added into the Q100 report. Please also refer to comment 5 of the previous section of this document. In addition, an emergency structure for sub-basin E is also included in the details.

3. The “Coffey report” was not reviewed and is assumed to be acceptable to PDS-LD for hydrology.

   Coffey report follows the methodology set forth in the SDCHM. The report only calculates time of concentration and peak flows for all sub-areas for pipe design. Coffey report does not deal with routing and therefore does not need to be reviewed for this purpose. The report was reviewed by PDS-LD and was found to be in compliance with SDCHM methodology.

4. Plans and calculations need to be included to support the stage-storage relationships used for each basin including the underground pipe.

   Calculations were provided in the previous report and are included in this 3/30/2015 report in terms of discharges: weir equation, slot equation acting as a weir first and an orifice second, and orifice equations (both when the orifices act as a weir and when hydraulically perform as an orifice) were also included in the previous version and are included in this version.

In terms of stage vs areas, it is basic engineering knowledge how to calculate a volume from areas, and tables were provided in the previous report. However, to facilitate understanding of the tables to be used in the HEC-HMS simulation, explanations in terms of volume are included (volume of voids in gravel, of voids in soil, and volume of surface water below the lowest surface inlet are also included in the new report).

The reviewer should be aware that the initial condition of the facilities is the invert of the lowest surface outlet, and that the volume of voids and surface volume below such level is already full at the beginning of the simulation (this volume is larger than the water quality volume requirements, and therefore the initial conditions satisfy the requirements of the September 2014 Drainage Design Manual for San Diego County).

If the previous explanation is not sufficient, the reviewer should provide a reason why the new extended tables, equations and explanations (which are above and beyond standard practice for elevation – volume – discharge) are not sufficient to satisfy this requirement.

5. SWMM analyses results (data, not graphs) and detailed output for each basin and POC need to be included.

   This comment no longer applies as SWMM is no longer used.

6. Each of the basins is analyzed as a detention basin and needs to include all of the design requirements for detention listed in the HDM section 6.2 including details of the designs of the emergency spillways.

A new section 5 deals with the details of the emergency discharge considerations. Emergency spillways are part of the outlet structure in most cases (except LID C and Basin A of LID A+F). Other emergency discharges (Such as discharges out of the lowest inlet connecting to the basins) are discussed in new section 5. In addition free board discussion, and discharge of non-attenuated Q100 peaks is discussed there.

Please refer to Section 5 of the new 3/30/2015 report for further details.