APPENDIX A

County of San Diego Roadway Classifications and Level of Service Thresholds for Roadway Segments (Page 9 from March 2012 Public Road Standards)

TABLE 1
AVERAGE DAILY VEHICLE TRIPS*

MOBILITY ELEMENT ROADS			LEVELS OF SERVICE				
Road Classification		# of Travel Lanes	A	B	C	D	E
Expressway (6.1)		6	<36,000	<54,000	<70,000	<86,000	<108,000
Prime Arterial (6.2)		6	<22,200	<37,000	<44,600	<50,000	<57,000
Major Road	w/ Raised Median (4.1A)	4	<14,800	<24,700	<29,600	<33,400	<37,000
	w/ Intermittent Turn Lanes (4.1B)	4	<13,700	<22,800	<27,400	<30,800	<34,200
Boulevard	w/ Raised Median (4.2A)	4	<18,000	<21,000	<24,000	<27,000	<30,000
	w/ Intermittent Turn Lanes (4.2B)	4	<16,800	<19,600	<22,500	<25,000	<28,000
Community Collector	w/ Raised Median (2.1A)	2	<10,000	<11,700	<13,400	<15,000	<19,000
	w/ Continuous Left Turn Lane (2.1B)	2	<3,000	<6,000	<9,500	<13,500	<19,000
	w/ Intermittent Turn Lane (2.1C)	2	<3,000	<6,000	<9,500	<13,500	<19,000
	w/ Passing Lane (2.1D)	2	<3,000	<6,000	<9,500	<13,500	<19,000
	No Median (2.1E)	2	<1,900	<4,100	<7,100	<10,900	<16,200
Light Collector	w/ Raised Median (2.2A)	2	<3,000	<6,000	<9,500	<13,500	<19,000
	w/ Continuous Left Turn Lane (2.2B)	2	<3,000	<6,000	<9,500	<13,500	<19,000
	w/ Intermittent Turn Lane (2.2C)	2	<3,000	<6,000	<9,500	<13,500	<19,000
	w/ Passing Lane (2.2D)	2	<3,000	<6,000	<9,500	<13,500	<19,000
	No Median (2.2E)	2	<1,900	<4,100	<7,100	<10,900	<16,200
	w/ Reduced Shoulder (2.2F)	2	<5,800	<6,800	<7,800	<8,700	<9,700
Minor Collector	w/ Raised Median (2.3A)	2	<3,000	<6,000	<7,000	<8,000	<9,000
	w/ Intermittent Turn Lane (2.3B)	2	<3,000	<6,000	<7,000	<8,000	<9,000
	No Median (2.3C)	2	<1,900	<4,100	<6,000	<7,000	<8,000
NON-MOBILITY ELEMENT ROADS**			**LEVELS OF SERVICE**				
Residential Collector		2	-	-	<4,500	-	-
Rural Residential Collector***		2	-	-	<4,500	-	-
Residential Road		2	-	-	<1,500	-	-
Rural Residential Road***		2	-	-	<1,500	-	-
Residential Cul-de-Sac or Loop Road		2	-	-	<200	-	-

* The values shown are subject to adjustment based on the geometry of the roadway, side frictions, and other relevant factors as determined by the Director, Department of Public Works.

** Levels of service are not applied to residential streets since their primary purpose is to serve abutting lots, not carry through traffic. Levels of service normally apply to roads carrying through traffic between major trip generators and attractors.

*** Rural Residential Collectors and Rural Residential Roads are intended to serve areas with lot sizes of 2 acres or more which do not have a demand for on-street parking. On-street parking is not assured for these cross sections. Additional right-of-way is needed if on-street parking is in paved area.

**** See Tables 2A and 2B for roadway surfacing and right-of-way widths.

APPENDIX B

Excerpts from County of San Diego
Guidelines for Determining Significance and Report Format and Content Requirements
(August 2011)

congestion on roads at LOS E or F. It states that new development that would significantly impact congestion on roads operating at LOS E or F, either currently or as a result of the project, will be denied unless improvements are scheduled to attain a LOS to D or better or appropriate mitigation is provided. The following significance guidelines define a method for evaluating whether or not increased traffic volumes generated or redistributed from a proposed project will "significantly impact congestion" on County roads, operating at LOS E or F, either currently or as a result of the project.

Traffic volume increases from public or private projects that result in one or more of the following criteria will have a significant traffic volume or level of service traffic impact on a road segment:

- ***The additional or redistributed ADT generated by the proposed project will significantly increase congestion on a Circulation Element Road or State Highway currently operating at LOS E or LOS F, or will cause a Circulation Element Road or State Highway to operate at a LOS E or LOS F as a result of the proposed project as identified in Table 1, or***

- ***The additional or redistributed ADT generated by the proposed project will cause a residential street to exceed its design capacity.***

Table 1
Measures of Significant Project Impacts to Congestion on Circulation Element Road Segments: Allowable Increases on Congested Road Segments

Level of service	Two-lane road	Four-lane road	Six-lane road
LOS E	200 ADT	400 ADT	600 ADT
LOS F	100 ADT	200 ADT	300 ADT

Notes:
1. **By adding proposed project trips to all other trips from a list of projects, this same table must be used to determine if total cumulative impacts are significant. If cumulative impacts are found to be significant, each project that contributes additional trips must mitigate a share of the cumulative impacts.**
2. **The County may also determine impacts have occurred on roads even when a project's traffic or cumulative impacts do not trigger an unacceptable level of service, when such traffic uses a significant amount of remaining road capacity.**

LOS E

The first significance criterion listed in Table 1 addresses roadways presently operating at LOS E. Based on these criteria, an impact from new development on an LOS E road would be reached when the increase in average daily trips (ADT) on a two-lane road exceeds 200 ADT. Using SANDAG's "Brief Guide for Vehicular Traffic Generation Rates for the San Diego Region" for most discretionary projects this would generate less than 25 peak hour trips. On average, during peak hour conditions, this would be only one additional car every 2.4 minutes.

In summary, under extremely congested LOS F conditions, small changes and disruptions to the traffic flow can significantly affect traffic operations and additional project traffic can increase the likelihood or frequency of these events. Therefore, the LOS F ADT significance criteria was set at 100 ADT (50% of the LOS E criterion) to provide a higher level of assurance that the traffic allowed under the criterion would not significantly impact traffic operation on the road segment.

Non-Circulation Element Residential Streets

Levels of service are not applied to residential streets since their primary purpose is to serve abutting lots and not to carry through traffic, however, for projects that will substantially increase traffic volumes on residential streets, a comparison of the traffic volumes on the residential streets with the recommended design capacity must be provided. Recommended design capacities for residential non-Circulation Element streets are provided in the San Diego County Public and Private Road Standards. Traffic volume that exceeds the design capacity on residential streets may impact residences and should be analyzed on a case-by-case basis.

4.2 Intersections

This section provides guidance for evaluating adverse environmental effects a project may have on signalized and unsignalized intersections. Table 2 summarizes significant project impacts for signalized and unsignalized intersections.

Table 2
Measures of Significant Project Impacts to Congestion on Intersections:
Allowable Increases on Congested Intersections

Level of Service	Signalized	Unsignalized
LOS E	Delay of 2 seconds or less	20 or less peak hour trips on a critical movement
LOS F	Either a Delay of 1 second, or 5 peak hour trips or less on a critical movement	5 or less peak hour trips on a critical movement

Notes:

1. A critical movement is an intersection movement (right turn, left turn, through-movement) that experiences excessive queues, which typically operate at LOS F. Also if a project adds significant volume to a minor roadway approach, a gap study should be provided that details the headways between vehicles on the major roadway.
2. By adding proposed project trips to all other trips from a list of projects, these same tables are used to determine if total cumulative impacts are significant. If cumulative impacts are found to be significant, each project is responsible for mitigating its share of the cumulative impact.
3. The County may also determine impacts have occurred on roads even when a project's direct or cumulative impacts do not trigger an unacceptable level of service, when such traffic uses a significant amount of remaining road capacity.
4. For determining significance at signalized intersections with LOS F conditions, the analysis must evaluate both the delay and the number of trips on a critical movement, exceedance of either criteria result in a significant impact.

APPENDIX C

Traffic Count Data Sheets

MetroCount Traffic Executive
Event Counts

EventCount-1034 -- English (ENU)

Datasets:

Site:	**[1099.01] MISSION RD(NORTH OF STERLING BRIDGE) NORTHBOUND**
Input A:	1 - North bound. - Added to totals. (1)
Input B:	3 - South bound. - Excluded from totals. (0)
Survey Duration:	19:26 Tuesday, October 16, 2007 => 10:01 Friday, October 19, 2007
File:	C:\True Count\Projects\1099 RBF FALLBROOK\1099.0119Oct2007.EC0 (Base)
Identifier:	V289W1MS MC56-L5 [MC55] (c)Microcom 19Oct04
Algorithm:	Event Count
Data type:	Axle sensors - Separate (Count)

Profile:

Filter time:	**0:00 Wednesday, October 17, 2007 => 0:00 Thursday, October 18, 2007**
Name:	20-50 BINS
Scheme:	Count events divided by two.
Units:	Non metric (ft, mi, ft/s, mph, lb, ton)
In profile:	Events = 26238 / 42086 (62.34%)

*** Wednesday, October 17, 2007=12569, 15 minute drops**

0000	0100	0200	0300	0400	0500	0600	0700	0800	0900	1000	1100	1200	1300	1400	1500	1600	1700	1800	1900	2000	2100	2200	2300	
50	**25**	**25**	**20**	**48**	**120**	**349**	**944**	**706**	**623**	**719**	**781**	**791**	**727**	**845**	**1088**	**1222**	**1067**	**779**	**562**	**494**	**284**	**200**	**100**	
12	7	5	3	14	14	60	156	**191**	164	194	184	225	188	166	292	278	254	214	172	120	92	65	34	-
12	5	4	6	9	18	66	**194**	184	136	161	183	200	182	178	266	315	317	189	131	103	76	56	24	-
9	9	9	3	9	33	90	**352**	160	154	181	210	157	175	194	264	292	244	200	138	117	62	53	25	-
17	4	7	8	16	55	133	**242**	171	169	183	204	209	182	307	266	337	252	176	121	154	54	26	17	-

AM Peak 0715 - 0815 (979), AM PHF=0.70

MetroCount Traffic Executive
Event Counts

EventCount-1043 -- English (ENU)

Datasets:

Site:	**[1099.01] MISSION RD(NORTH OF STERLING BRIDGE) SOUTHBOUND**
Input A:	1 - North bound. - Excluded from totals. (0)
Input B:	3 - South bound. - Added to totals. (1)
Survey Duration:	19:26 Tuesday, October 16, 2007 => 10:01 Friday, October 19, 2007
File:	C:\True Count\Projects\1099 RBF FALLBROOK\1099.0119Oct2007.EC0 (Base)
Identifier:	V289W1MS MC56-L5 [MC55] (c)Microcom 19Oct04
Algorithm:	Event Count
Data type:	Axle sensors - Separate (Count)

Profile:

Filter time:	**0:00 Wednesday, October 17, 2007 => 0:00 Thursday, October 18, 2007**
Name:	20-50 BINS
Scheme:	Count events divided by two
Units:	Non metric (ft, mi, ft/s, mph, lb, ton)
In profile:	Events = 22330 / 35818 (62.34%)

*** Wednesday, October 17, 2007=11632, 15 minute drops**

0000	0100	0200	0300	0400	0500	0600	0700	0800	0900	1000	1100	1200	1300	1400	1500	1600	1700	1800	1900	2000	2100	2200	2300	
31	**10**	**13**	**32**	**90**	**350**	**685**	**1049**	**731**	**580**	**551**	**661**	**737**	**722**	**719**	**893**	**893**	**944**	**745**	**483**	**335**	**208**	**110**	**60**	
14	3	5	9	10	63	119	**217**	187	131	123	146	188	183	177	238	223	248	214	143	93	53	36	21	-
4	1	2	8	17	55	141	**331**	208	125	147	170	197	191	163	222	190	247	217	126	98	58	33	15	-
7	2	2	6	29	91	170	**301**	169	146	141	164	186	189	173	206	224	224	169	109	75	55	22	13	-
6	4	4	9	34	141	**255**	200	167	178	140	181	166	159	206	227	256	225	145	105	69	42	19	11	-

AM Peak 0645 - 0745 (1104), AM PHF=0.83

MetroCount Traffic Executive
Event Counts

EventCount-1036 -- English (ENU)

Datasets:

Site:	**[1099.02] MISSION RD(STAGE COACH LN-STERLING BRIDGE) NORTHBOUND**
Input A:	1 - North bound. - Added to totals. (1)
Input B:	3 - South bound. - Excluded from totals. (0)
Survey Duration:	20:25 Tuesday, October 16, 2007 => 9:59 Friday, October 19, 2007
File:	C:\True Count\Projects\1099 RBF FALLBROOK\1099.0219Oct2007.EC0 (Regular)
Identifier:	T5441WJP MC56-L5 [MC55] (c)Microcom 19Oct04
Algorithm:	Event Count
Data type:	Axle sensors - Separate (Count)

Profile:

Filter time:	**0:00 Wednesday, October 17, 2007 => 0:00 Thursday, October 18, 2007**
Name:	20-50 BINS
Scheme:	Count events divided by two.
Units:	Non metric (ft, mi, ft/s, mph, lb, ton)
In profile:	Events = 25344 / 39569 (64.05%)

*** Wednesday, October 17, 2007=12654, 15 minute drops**

0000	0100	0200	0300	0400	0500	0600	0700	0800	0900	1000	1100	1200	1300	1400	1500	1600	1700	1800	1900	2000	2100	2200	2300	
54	**27**	**25**	**22**	**49**	**115**	**354**	**958**	**699**	**630**	**707**	**778**	**776**	**715**	**848**	**1095**	**1227**	**1087**	**812**	**570**	**501**	**295**	**208**	**102**	
14	8	4	5	14	14	57	164	**195**	165	191	184	216	184	177	290	272	260	220	168	119	93	68	31	-
14	5	5	6	9	17	69	**200**	178	133	163	181	195	181	171	270	328	326	192	139	106	82	57	26	-
9	9	9	4	10	31	95	**354**	152	158	176	197	155	171	186	262	299	260	211	135	125	63	53	25	-
17	5	7	7	16	53	133	**240**	174	174	177	216	210	179	314	273	328	241	189	128	151	57	30	20	-

AM Peak 0715 - 0815 (989), AM PHF=0.70

MetroCount Traffic Executive
Event Counts

EventCount-1044 -- English (ENU)

Datasets:

Site:	**[1099.02] MISSION RD(STAGE COACH LN-STERLING BRIDGE) SOUTHBOUND**
Input A:	1 - North bound. - Excluded from totals. (0)
Input B:	3 - South bound. - Added to totals. (1)
Survey Duration:	20:25 Tuesday, October 16, 2007 => 9:59 Friday, October 19, 2007
File:	C:\True Count\Projects\1099 RBF FALLBROOK\1099.0219Oct2007.EC0 (Regular)
Identifier:	T5441WJP MC56-L5 [MC55] (c)Microcom 19Oct04
Algorithm:	Event Count
Data type:	Axle sensors - Separate (Count)

Profile:

Filter time:	**0:00 Wednesday, October 17, 2007 => 0:00 Thursday, October 18, 2007**
Name:	20-50 BINS
Scheme:	Count events divided by two
Units:	Non metric (ft, mi, ft/s, mph, lb, ton)
In profile:	Events = 23040 / 35972 (64.05%)

*** Wednesday, October 17, 2007=11535, 15 minute drops**

0000	0100	0200	0300	0400	0500	0600	0700	0800	0900	1000	1100	1200	1300	1400	1500	1600	1700	1800	1900	2000	2100	2200	2300	
27	**11**	**13**	**34**	**99**	**358**	**704**	**1020**	**735**	**583**	**565**	**671**	**737**	**725**	**714**	**877**	**856**	**920**	**736**	**457**	**319**	**206**	**107**	**61**	
11	4	5	8	11	64	121	**218**	193	130	125	150	188	180	179	230	217	236	208	131	86	52	35	19	-
5	1	1	9	18	60	148	**315**	205	134	148	175	188	190	163	218	181	246	215	123	99	59	32	15	-
6	2	2	7	33	94	165	**288**	165	140	146	160	190	191	168	208	221	215	165	104	67	53	22	16	-
5	4	5	10	37	140	**270**	199	172	179	146	186	171	164	204	221	237	223	148	99	67	42	18	11	-

AM Peak 0645 - 0745 (1091), AM PHF=0.87

MetroCount Traffic Executive
Event Counts

EventCount-1046 -- English (ENU)

Datasets:

Site:	**[1099.03] MISSION RD(OLIVE HILL-STAGE COACH LN) NORTHBOUND**
Input A:	1 - North bound. - Added to totals. (1)
Input B:	3 - South bound. - Excluded from totals. (0)
Survey Duration:	19:48 Tuesday, October 16, 2007 => 9:57 Friday, October 19, 2007
File:	C:\True Count\Projects\1099 RBF FALLBROOK\1099.0319Oct2007.EC0 (Regular)
Identifier:	R8319BB9 MC56-L5 [MC55] (c)Microcom 19Oct04
Algorithm:	Event Count
Data type:	Axle sensors - Separate (Count)

Profile:

Filter time:	**0:00 Wednesday, October 17, 2007 => 0:00 Thursday, October 18, 2007**
Name:	20-50 BINS
Scheme:	Count events divided by two
Units:	Non metric (ft, mi, ft/s, mph, lb, ton)
In profile:	Events = 23432 / 37107 (63.15%)

*** Wednesday, October 17, 2007=12736, 15 minute drops**

0000	0100	0200	0300	0400	0500	0600	0700	0800	0900	1000	1100	1200	1300	1400	1500	1600	1700	1800	1900	2000	2100	2200	2300	
60	**22**	**26**	**22**	**53**	**111**	**387**	**975**	**655**	**591**	**696**	**753**	**760**	**712**	**810**	**1063**	**1324**	**1133**	**918**	**628**	**372**	**328**	**233**	**104**	
14	8	6	3	15	12	58	**182**	174	151	196	168	220	195	159	252	253	293	249	172	121	105	78	32	-
15	3	4	9	9	19	73	**262**	173	122	150	173	206	167	172	241	368	311	234	155	89	80	63	20	-
13	6	8	4	13	27	98	**327**	145	157	171	196	145	184	194	290	365	279	208	145	80	68	59	34	-
18	5	8	6	16	53	158	**204**	163	161	179	216	189	166	285	280	338	250	227	156	82	75	33	18	-

AM Peak 0700 - 0800 (975), AM PHF=0.75

MetroCount Traffic Executive
Event Counts

EventCount-1048 -- English (ENU)

Datasets:

Site:	**[1099.03] MISSION RD(OLIVE HILL-STAGE COACH LN) SOUTHBOUND**
Input A:	1 - North bound. - Excluded from totals. (0)
Input B:	3 - South bound. - Added to totals. (1)
Survey Duration:	19:48 Tuesday, October 16, 2007 => 9:57 Friday, October 19, 2007
File:	C:\True Count\Projects\1099 RBF FALLBROOK\1099.0319Oct2007.EC0 (Regular)
Identifier:	R8319BB9 MC56-L5 [MC55] (c)Microcom 19Oct04
Algorithm:	Event Count
Data type:	Axle sensors - Separate (Count)

Profile:

Filter time:	**0:00 Wednesday, October 17, 2007 => 0:00 Thursday, October 18, 2007**
Name:	20-50 BINS
Scheme:	Count events divided by two
Units:	Non metric (ft, mi, ft/s, mph, lb, ton)
In profile:	Events = 26488 / 41947 (63.15%)

*** Wednesday, October 17, 2007=12090, 15 minute drops**

0000	0100	0200	0300	0400	0500	0600	0700	0800	0900	1000	1100	1200	1300	1400	1500	1600	1700	1800	1900	2000	2100	2200	2300	
29	**14**	**15**	**37**	**110**	**406**	**797**	**953**	**787**	**636**	**565**	**652**	**751**	**725**	**734**	**935**	**914**	**958**	**725**	**512**	**391**	**248**	**127**	**69**	
12	5	6	8	11	74	136	**217**	214	157	126	152	182	174	189	256	218	270	187	146	107	67	41	28	-
6	2	1	9	18	73	174	**261**	217	144	147	179	195	201	150	239	216	266	194	131	105	68	42	15	-
5	2	4	11	39	113	184	**264**	168	148	143	153	198	183	170	236	220	208	176	128	83	67	25	15	-
6	5	4	9	42	146	**303**	211	188	187	149	168	176	167	225	204	260	214	168	107	96	46	19	11	-

AM Peak 0645 - 0745 (1045), AM PHF=0.86

MetroCount Traffic Executive
Event Counts

EventCount-1040 -- English (ENU)

Datasets:

Site:	**[1099.04] MISSION RD(SOUTH OF OLIVE HILL RD) NORTHBOUND**
Input A:	1 - North bound. - Added to totals. (1)
Input B:	3 - South bound. - Excluded from totals. (0)
Survey Duration:	20:09 Tuesday, October 16, 2007 => 9:56 Friday, October 19, 2007
File:	C:\True Count\Projects\1099 RBF FALLBROOK\1099.0419Oct2007.EC0 (Regular)
Identifier:	S1079HQH MC56-L5 [MC55] (c)Microcom 19Oct04
Algorithm:	Event Count
Data type:	Axle sensors - Separate (Count)

Profile:

Filter time:	**0:00 Wednesday, October 17, 2007 => 0:00 Thursday, October 18, 2007**
Name:	20-50 BINS
Scheme:	Count events divided by two.
Units:	Non metric (ft, mi, ft/s, mph, lb, ton)
In profile:	Events = 21463 / 34213 (62.73%)

*** Wednesday, October 17, 2007=10425, 15 minute drops**

0000	0100	0200	0300	0400	0500	0600	0700	0800	0900	1000	1100	1200	1300	1400	1500	1600	1700	1800	1900	2000	2100	2200	2300	
63	**30**	**25**	**27**	**47**	**108**	**349**	**792**	**528**	**525**	**543**	**604**	**623**	**601**	**725**	**876**	**959**	**861**	**729**	**511**	**320**	**287**	**188**	**104**	
16	8	7	5	14	14	48	**163**	151	139	148	136	173	153	149	219	207	226	194	144	83	93	46	34	-
17	5	5	6	10	17	76	**208**	132	105	115	150	166	150	152	212	282	225	180	128	73	80	57	19	-
11	7	9	7	7	27	88	**256**	108	146	135	138	115	147	177	223	219	213	183	125	78	63	54	32	-
19	10	4	9	16	50	137	**165**	137	135	145	180	169	151	247	222	251	197	172	114	86	51	31	19	-

AM Peak 0700 - 0800 (792), AM PHF=0.77

MetroCount Traffic Executive
Event Counts

EventCount-1041 -- English (ENU)

Datasets:

Site:	**[1099.04] MISSION RD(SOUTH OF OLIVE HILL RD) SOUTHBOUND**
Input A:	1 - North bound. - Excluded from totals. (0)
Input B:	3 - South bound. - Added to totals. (1)
Survey Duration:	20:09 Tuesday, October 16, 2007 => 9:56 Friday, October 19, 2007
File:	C:\True Count\Projects\1099 RBF FALLBROOK\1099.0419Oct2007.EC0 (Regular)
Identifier:	S1079HQH MC56-L5 [MC55] (c)Microcom 19Oct04
Algorithm:	Event Count
Data type:	Axle sensors - Separate (Count)

Profile:

Filter time:	**0:00 Wednesday, October 17, 2007 => 0:00 Thursday, October 18, 2007**
Name:	20-50 BINS
Scheme:	Count events divided by two.
Units:	Non metric (ft, mi, ft/s, mph, lb, ton)
In profile:	Events = 21463 / 34213 (62.73%)

*** Wednesday, October 17, 2007=11038, 15 minute drops**

0000	0100	0200	0300	0400	0500	0600	0700	0800	0900	1000	1100	1200	1300	1400	1500	1600	1700	1800	1900	2000	2100	2200	2300	
27	**13**	**17**	**42**	**125**	**391**	**681**	**915**	**726**	**610**	**527**	**628**	**670**	**653**	**689**	**840**	**780**	**850**	**670**	**435**	**335**	**221**	**131**	**62**	
11	5	6	8	18	72	137	**212**	198	138	115	153	165	161	186	228	190	231	169	119	92	56	48	21	-
5	2	1	9	20	78	155	**256**	195	135	139	175	172	172	149	225	179	258	188	119	95	68	37	17	-
6	2	2	12	45	109	170	**254**	156	164	139	136	166	167	157	206	195	186	152	101	71	52	24	17	-
5	4	8	13	42	132	**219**	193	177	173	134	164	167	153	197	181	216	175	161	96	77	45	22	7	-

AM Peak 0645 - 0745 (941), AM PHF=0.92

True Count

3401 First Ave. #123
San Diego, CA 92103

File Name : 1099.01.MISSION RD.STERLING BRIDGE
Site Code : 00000000
Start Date : 10/17/2007
Page No : 1

Groups Printed- Vehicles

	MISSION RD Southbound				STERLING BRIDGE Westbound				MISSION RD Northbound				STERLING BRIDGE Eastbound				
Start Time	Left	Thru	Right	Peds	Left	Thru	Right	Peds	Left	Thru	Right	Peds	Left	Thru	Right	Peds	Int. Total
07:00	4	217	0	0	15	0	3	0	0	162	3	0	0	0	0	0	404
07:15	6	310	0	0	18	0	11	0	0	192	5	0	0	0	0	0	542
07:30	8	249	0	0	18	0	11	0	0	312	8	0	0	0	0	0	606
07:45	4	185	0	0	8	0	8	0	0	231	8	0	0	0	0	0	444
Total	22	961	0	0	59	0	33	0	0	897	24	0	0	0	0	0	1996
08:00	4	189	0	0	12	0	8	0	0	164	6	0	0	0	0	0	383
08:15	13	185	0	0	11	0	8	0	0	160	6	0	0	0	0	0	383
08:30	4	173	0	0	10	0	12	0	0	163	3	0	0	0	0	0	365
08:45	7	157	0	0	8	0	3	0	0	139	3	0	0	0	0	0	317
Total	28	704	0	0	41	0	31	0	0	626	18	0	0	0	0	0	1448
*** BREAK ***																	
16:00	13	219	0	0	6	0	4	0	0	275	8	0	0	0	0	0	525
16:15	13	208	0	0	5	0	3	0	0	291	15	0	0	0	0	0	535
16:30	7	235	0	0	7	0	11	0	0	281	17	0	0	0	0	0	558
16:45	16	254	0	0	3	0	9	0	0	294	17	0	0	0	0	0	593
Total	49	916	0	0	21	0	27	0	0	1141	57	0	0	0	0	0	2211
17:00	21	248	0	0	7	0	8	0	0	287	12	0	0	0	0	0	583
17:15	14	243	0	0	6	0	3	0	0	275	11	0	0	0	0	0	552
17:30	17	263	0	0	8	0	2	0	0	243	14	0	0	0	0	0	547
17:45	14	232	0	0	5	0	5	0	0	233	10	0	0	0	0	0	499
Total	66	986	0	0	26	0	18	0	0	1038	47	0	0	0	0	0	2181
Grand Total	165	3567	0	0	147	0	109	0	0	3702	146	0	0	0	0	0	7836
Apprch %	4.4	95.6	0	0	57.4	0	42.6	0	0	96.2	3.8	0	0	0	0	0	
Total %	2.1	45.5	0	0	1.9	0	1.4	0	0	47.2	1.9	0	0	0	0	0	

True Count

3401 First Ave. #123
San Diego, CA 92103

File Name : 1099.01.MISSION RD.STERLING BRIDGE
Site Code : 00000000
Start Date : 10/17/2007
Page No : 2

	MISSION RD Southbound					STERLING BRIDGE Westbound					MISSION RD Northbound					STERLING BRIDGE Eastbound					
Start Time	Left	Thru	Right	Peds	App. Total	Left	Thru	Right	Peds	App. Total	Left	Thru	Right	Peds	App. Total	Left	Thru	Right	Peds	App. Total	Int. Total
Peak Hour Analysis From 07:00 to 11:45 - Peak 1 of 1																					
Peak Hour for Entire Intersection Begins at 07:00																					
07:00	4	217	0	0	221	15	0	3	0	18	0	162	3	0	165	0	0	0	0	0	404
07:15	6	**310**	0	0	**316**	**18**	0	**11**	0	**29**	0	192	5	0	197	0	0	0	0	0	542
07:30	**8**	249	0	0	257	18	0	11	0	29	0	**312**	**8**	0	**320**	0	0	0	0	0	**606**
07:45	4	185	0	0	189	8	0	8	0	16	0	231	8	0	239	0	0	0	0	0	444
Total Volume	22	961	0	0	983	59	0	33	0	92	0	897	24	0	921	0	0	0	0	0	1996
% App. Total	2.2	97.8	0	0		64.1	0	35.9	0		0	97.4	2.6	0		0	0	0	0		
PHF	.688	.775	.000	.000	.778	.819	.000	.750	.000	.793	.000	.719	.750	.000	.720	.000	.000	.000	.000	.000	.823

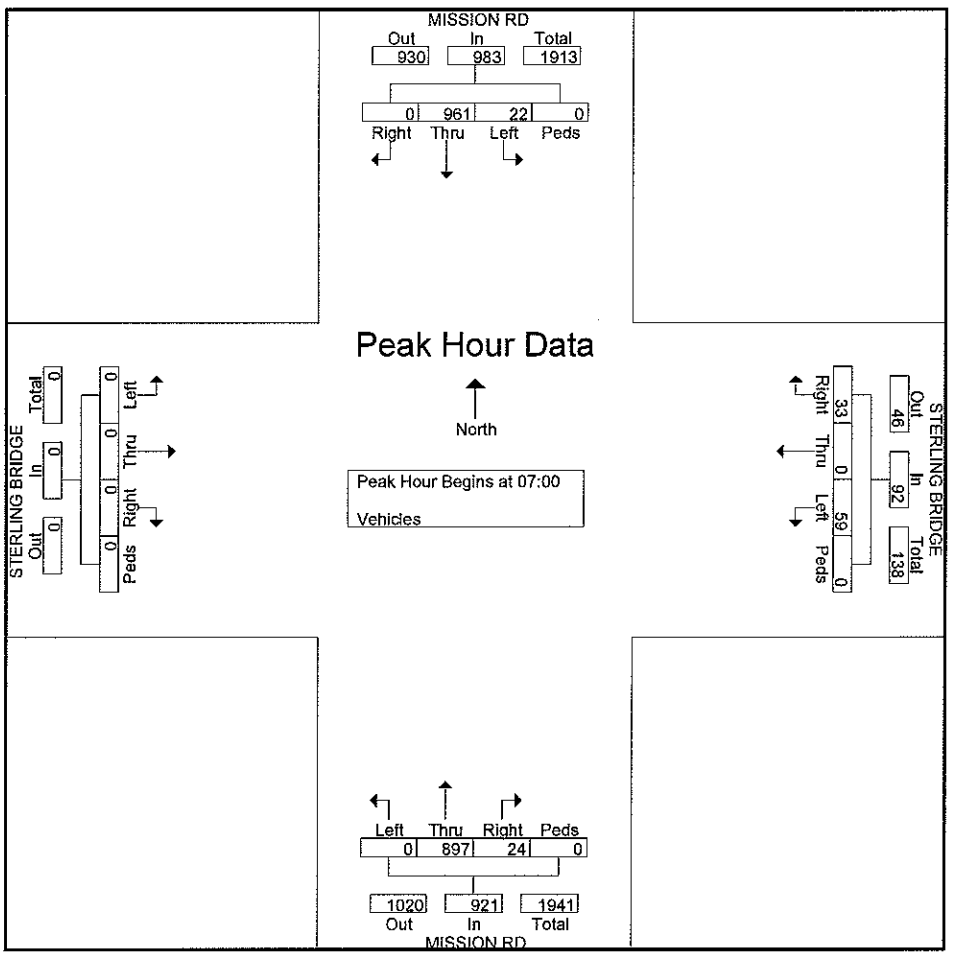

True Count

3401 First Ave. #123
San Diego, CA 92103

File Name : 1099.01.MISSION RD.STERLING BRIDGE
Site Code : 00000000
Start Date : 10/17/2007
Page No : 3

	MISSION RD Southbound					STERLING BRIDGE Westbound					MISSION RD Northbound					STERLING BRIDGE Eastbound					
Start Time	Left	Thru	Right	Peds	App. Total	Left	Thru	Right	Peds	App. Total	Left	Thru	Right	Peds	App. Total	Left	Thru	Right	Peds	App. Total	Int. Total
Peak Hour Analysis From 12:00 to 17:45 - Peak 1 of 1																					
Peak Hour for Entire Intersection Begins at 16:30																					
16:30	7	235	0	0	242	**7**	0	**11**	0	**18**	0	281	**17**	0	298	0	0	0	0	0	558
16:45	16	**254**	0	0	**270**	3	0	9	0	12	0	**294**	17	0	**311**	0	0	0	0	0	**593**
17:00	**21**	248	0	0	269	7	0	8	0	15	0	287	12	0	299	0	0	0	0	0	583
17:15	14	243	0	0	257	6	0	3	0	9	0	275	11	0	286	0	0	0	0	0	552
Total Volume	58	980	0	0	1038	23	0	31	0	54	0	1137	57	0	1194	0	0	0	0	0	2286
% App. Total	5.6	94.4	0	0		42.6	0	57.4	0		0	95.2	4.8	0		0	0	0	0		
PHF	.690	.965	.000	.000	.961	.821	.000	.705	.000	.750	.000	.967	.838	.000	.960	.000	.000	.000	.000	.000	.964

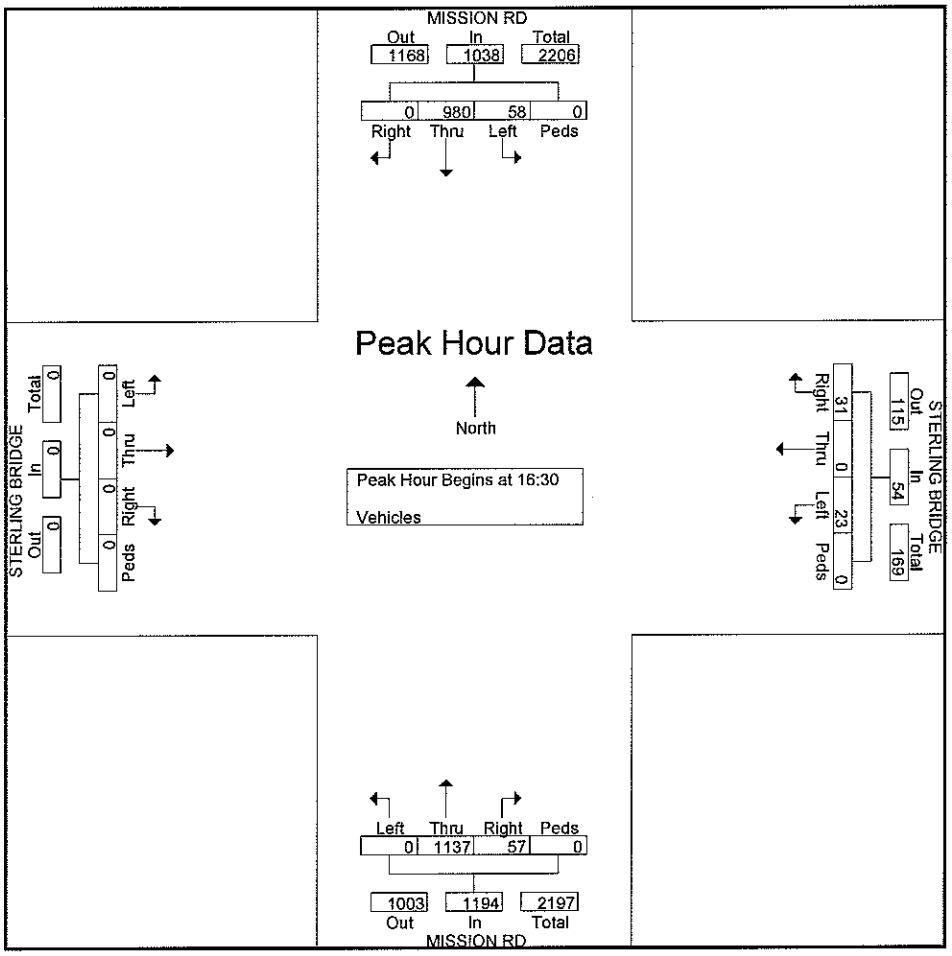

True Count

3401 First Ave. #123
San Diego, CA 92103

File Name : 1099.02.MISSION RD.STAGE COACH LN
Site Code : 00000000
Start Date : 10/17/2007
Page No : 1

Groups Printed- Vehicles

	MISSION RD Southbound				STAGE COACH LN Westbound				MISSION RD Northbound				STAGE COACH LN Eastbound				
Start Time	Left	Thru	Right	Peds	Left	Thru	Right	Peds	Left	Thru	Right	Peds	Left	Thru	Right	Peds	Int. Total
07:00	64	174	0	4	44	0	21	0	0	123	82	0	0	0	0	0	512
07:15	105	228	0	3	43	0	32	0	0	163	109	11	0	0	0	0	694
07:30	116	199	0	2	69	0	102	1	0	228	82	2	0	0	0	0	801
07:45	19	107	0	1	53	0	46	0	0	161	37	5	0	0	0	0	429
Total	304	708	0	10	209	0	201	1	0	675	310	18	0	0	0	0	2436
08:00	30	188	0	0	41	0	34	0	0	156	28	1	0	0	0	0	478
08:15	31	190	0	0	35	0	33	0	0	141	21	0	0	0	0	0	451
08:30	27	164	0	0	24	0	34	0	0	139	15	2	0	0	0	0	405
08:45	20	128	0	0	31	0	24	0	0	105	33	2	0	0	0	1	344
Total	108	670	0	0	131	0	125	0	0	541	97	5	0	0	0	1	1678
*** BREAK ***																	
16:00	41	197	0	0	37	0	55	0	0	221	36	3	0	0	0	0	590
16:15	38	166	0	0	55	0	42	0	0	273	74	4	0	0	0	0	652
16:30	58	187	0	1	40	0	43	0	0	254	71	1	0	0	0	0	655
16:45	60	211	0	0	72	0	52	0	0	267	63	0	0	0	0	0	725
Total	197	761	0	1	204	0	192	0	0	1015	244	8	0	0	0	0	2622
17:00	51	188	0	0	61	0	54	0	0	236	63	4	0	0	0	0	657
17:15	42	221	0	0	59	0	52	0	0	248	45	1	0	0	0	0	668
17:30	59	211	0	0	36	0	38	0	0	227	41	0	0	0	0	0	612
17:45	68	178	0	0	44	0	50	0	0	194	56	1	0	0	0	0	591
Total	220	798	0	0	200	0	194	0	0	905	205	6	0	0	0	0	2528
Grand Total	829	2937	0	11	744	0	712	1	0	3136	856	37	0	0	0	1	9264
Apprch %	21.9	77.8	0	0.3	51.1	0	48.9	0.1	0	77.8	21.2	0.9	0	0	0	100	
Total %	8.9	31.7	0	0.1	8	0	7.7	0	0	33.9	9.2	0.4	0	0	0	0	

True Count

3401 First Ave. #123
San Diego, CA 92103

File Name : 1099.02.MISSION RD.STAGE COACH LN
Site Code : 00000000
Start Date : 10/17/2007
Page No : 2

	MISSION RD Southbound					STAGE COACH LN Westbound					MISSION RD Northbound					STAGE COACH LN Eastbound					
Start Time	Left	Thru	Right	Peds	App. Total	Left	Thru	Right	Peds	App. Total	Left	Thru	Right	Peds	App. Total	Left	Thru	Right	Peds	App. Total	Int. Total
Peak Hour Analysis From 07:00 to 11:45 - Peak 1 of 1																					
Peak Hour for Entire Intersection Begins at 07:00																					
07:00	64	174	0	4	242	44	0	21	0	65	0	123	82	0	205	0	0	0	0	0	512
07:15	105	**228**	0	3	**336**	43	0	32	0	75	0	163	**109**	**11**	283	0	0	0	0	0	694
07:30	**116**	199	0	2	317	**69**	0	**102**	**1**	**172**	0	**228**	82	2	**312**	0	0	0	0	0	**801**
07:45	19	107	0	1	127	53	0	46	0	99	0	161	37	5	203	0	0	0	0	0	429
Total Volume	304	708	0	10	1022	209	0	201	1	411	0	675	310	18	1003	0	0	0	0	0	2436
% App. Total	29.7	69.3	0	1		50.9	0	48.9	0.2		0	67.3	30.9	1.8		0	0	0	0		
PHF	.655	.776	.000	.625	.760	.757	.000	.493	.250	.597	.000	.740	.711	.409	.804	.000	.000	.000	.000	.000	.760

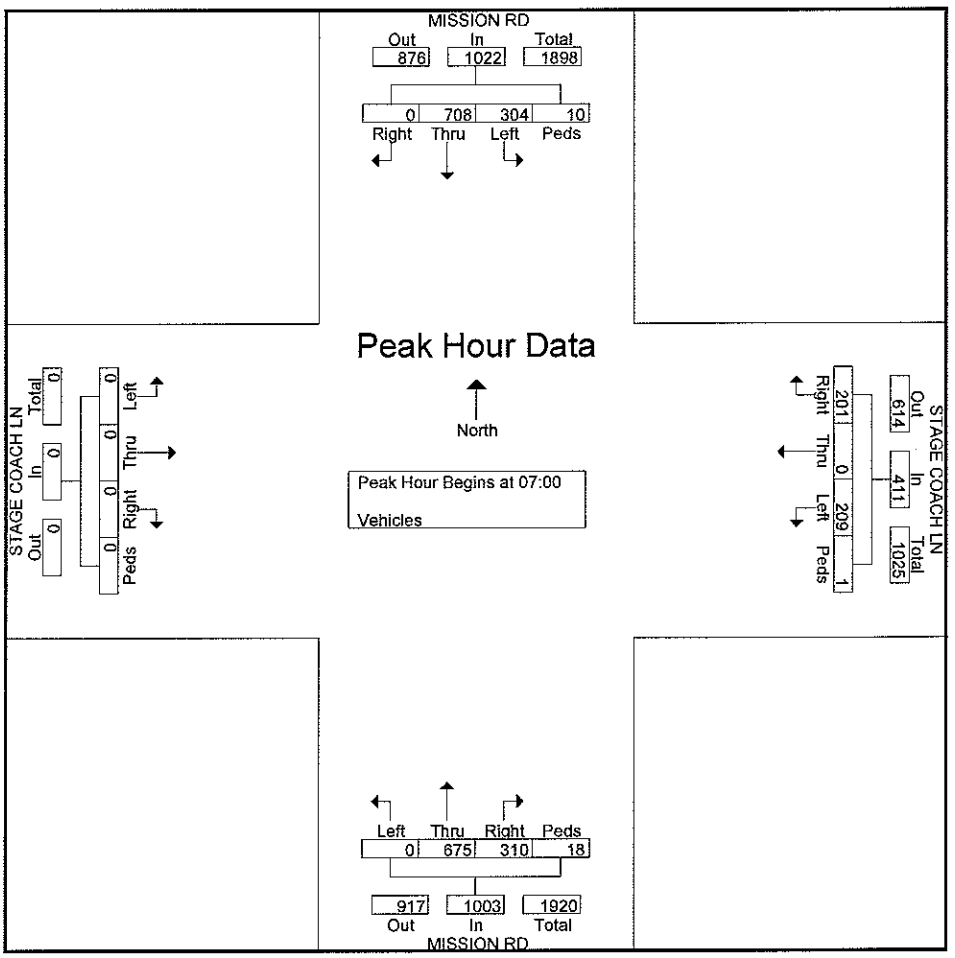

True Count

3401 First Ave. #123
San Diego, CA 92103

File Name : 1099.02.MISSION RD.STAGE COACH LN
Site Code : 00000000
Start Date : 10/17/2007
Page No : 3

	MISSION RD Southbound					STAGE COACH LN Westbound					MISSION RD Northbound					STAGE COACH LN Eastbound					
Start Time	Left	Thru	Right	Peds	App. Total	Left	Thru	Right	Peds	App. Total	Left	Thru	Right	Peds	App. Total	Left	Thru	Right	Peds	App. Total	Int. Total
Peak Hour Analysis From 12:00 to 17:45 - Peak 1 of 1																					
Peak Hour for Entire Intersection Begins at 16:30																					
16:30	58	187	0	1	246	40	0	43	0	83	0	254	71	1	326	0	0	0	0	0	655
16:45	**60**	211	0	0	**271**	**72**	0	52	0	**124**	0	**267**	63	0	**330**	0	0	0	0	0	**725**
17:00	51	188	0	0	239	61	0	**54**	0	115	0	236	63	4	303	0	0	0	0	0	657
17:15	42	**221**	0	0	263	59	0	52	0	111	0	248	45	1	294	0	0	0	0	0	668
Total Volume	211	807	0	1	1019	232	0	201	0	433	0	1005	242	6	1253	0	0	0	0	0	2705
% App. Total	20.7	79.2	0	0.1		53.6	0	46.4	0		0	80.2	19.3	0.5		0	0	0	0		
PHF	.879	.913	.000	.250	.940	.806	.000	.931	.000	.873	.000	.941	.852	.375	.949	.000	.000	.000	.000	.000	.933

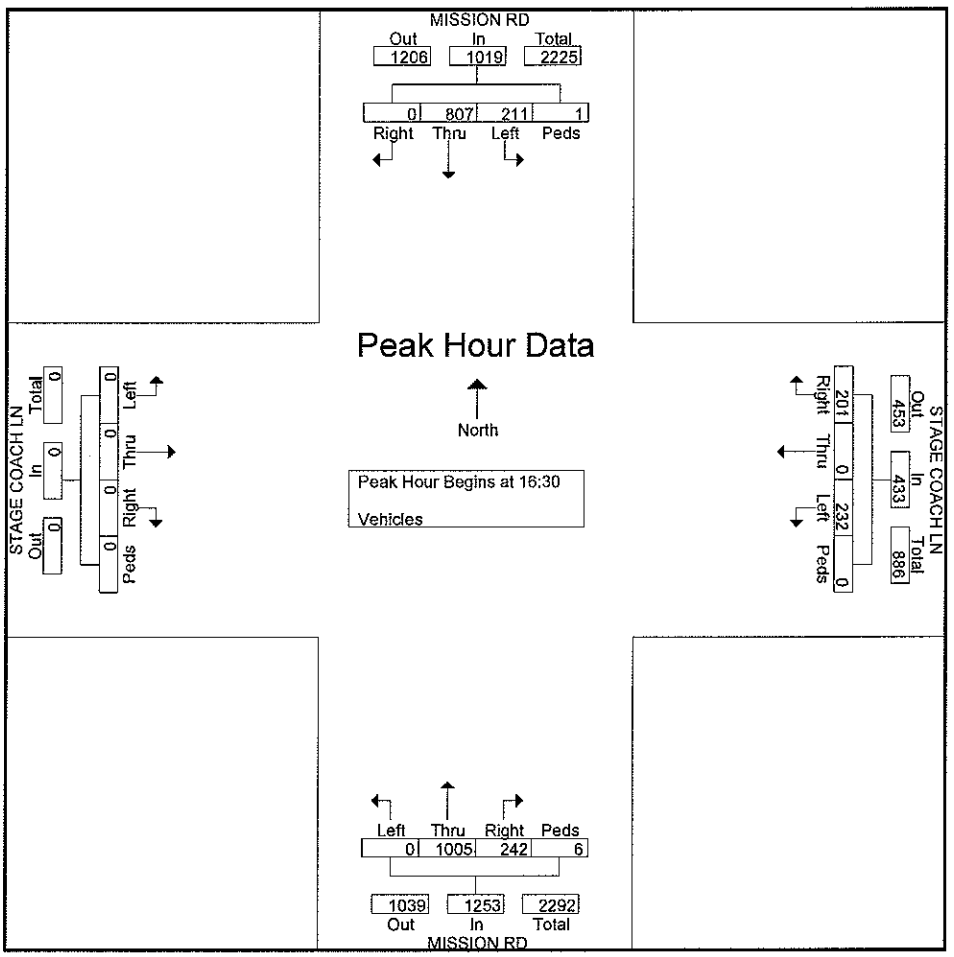

True Count

3401 First Ave. #123
San Diego, CA 92103

File Name : 1099.03.MISSION RD.OLIVE HILL RD
Site Code : 00000000
Start Date : 10/17/2007
Page No : 1

Groups Printed- Vehicles

	MISSION RD Southbound				OLIVE HILL RD Westbound				MISSION RD Northbound				OLIVE HILL RD Eastbound				
Start Time	Left	Thru	Right	Peds	Left	Thru	Right	Peds	Left	Thru	Right	Peds	Left	Thru	Right	Peds	Int. Total
07:00	0	185	54	6	0	0	0	0	6	176	0	1	46	0	14	3	491
07:15	0	209	51	4	0	0	0	0	15	210	0	2	76	0	15	3	585
07:30	0	218	52	4	0	0	0	0	12	232	0	0	45	0	18	1	582
07:45	0	166	38	2	0	0	0	0	6	181	0	0	46	0	4	0	443
Total	0	778	195	16	0	0	0	0	39	799	0	3	213	0	51	7	2101
08:00	0	161	46	0	0	0	0	0	5	143	0	0	26	0	6	0	387
08:15	0	156	48	0	0	0	0	0	5	128	0	0	47	0	4	0	388
08:30	0	168	32	0	0	0	0	0	1	109	0	0	40	0	4	0	354
08:45	0	132	25	0	0	0	0	0	5	120	0	0	24	0	3	1	310
Total	0	617	151	0	0	0	0	0	16	500	0	0	137	0	17	1	1439
*** BREAK ***																	
16:00	0	179	53	0	0	0	0	0	12	224	0	0	66	0	7	0	541
16:15	0	161	59	0	0	0	0	0	9	247	0	0	71	0	4	0	551
16:30	0	174	47	1	0	0	0	0	9	211	0	0	122	0	15	2	581
16:45	0	224	77	0	0	0	0	0	11	244	0	0	80	0	4	1	641
Total	0	738	236	1	0	0	0	0	41	926	0	0	339	0	30	3	2314
17:00	0	196	66	0	0	0	0	0	21	204	0	0	74	0	10	4	575
17:15	0	206	60	0	0	0	0	0	11	207	0	0	85	0	16	1	586
17:30	0	163	54	0	0	0	0	0	9	200	0	0	62	6	13	0	507
17:45	0	165	70	0	0	0	0	0	11	212	0	0	67	0	8	1	534
Total	0	730	250	0	0	0	0	0	52	823	0	0	288	6	47	6	2202
Grand Total	0	2863	832	17	0	0	0	0	148	3048	0	3	977	6	145	17	8056
Apprch %	0	77.1	22.4	0.5	0	0	0	0	4.6	95.3	0	0.1	85.3	0.5	12.7	1.5	
Total %	0	35.5	10.3	0.2	0	0	0	0	1.8	37.8	0	0	12.1	0.1	1.8	0.2	

True Count

3401 First Ave. #123
San Diego, CA 92103

File Name : 1099.03.MISSION RD.OLIVE HILL RD
Site Code : 00000000
Start Date : 10/17/2007
Page No : 2

	MISSION RD Southbound					OLIVE HILL RD Westbound					MISSION RD Northbound					OLIVE HILL RD Eastbound					
Start Time	Left	Thru	Right	Peds	App. Total	Left	Thru	Right	Peds	App. Total	Left	Thru	Right	Peds	App. Total	Left	Thru	Right	Peds	App. Total	Int. Total
Peak Hour Analysis From 07:00 to 12:00 - Peak 1 of 1																					
Peak Hour for Entire Intersection Begins at 07:00																					
07:00	0	185	**54**	**6**	245	0	0	0	0	0	6	176	0	1	183	46	0	14	**3**	63	491
07:15	0	209	51	4	264	0	0	0	0	0	**15**	210	0	**2**	227	**76**	0	15	3	**94**	**585**
07:30	0	**218**	52	4	**274**	0	0	0	0	0	12	**232**	0	0	**244**	45	0	**18**	1	64	582
07:45	0	166	38	2	206	0	0	0	0	0	6	181	0	0	187	46	0	4	0	50	443
Total Volume	0	778	195	16	989	0	0	0	0	0	39	799	0	3	841	213	0	51	7	271	2101
% App. Total	0	78.7	19.7	1.6		0	0	0	0		4.6	95	0	0.4		78.6	0	18.8	2.6		
PHF	.000	.892	.903	.667	.902	.000	.000	.000	.000	.000	.650	.861	.000	.375	.862	.701	.000	.708	.583	.721	.898

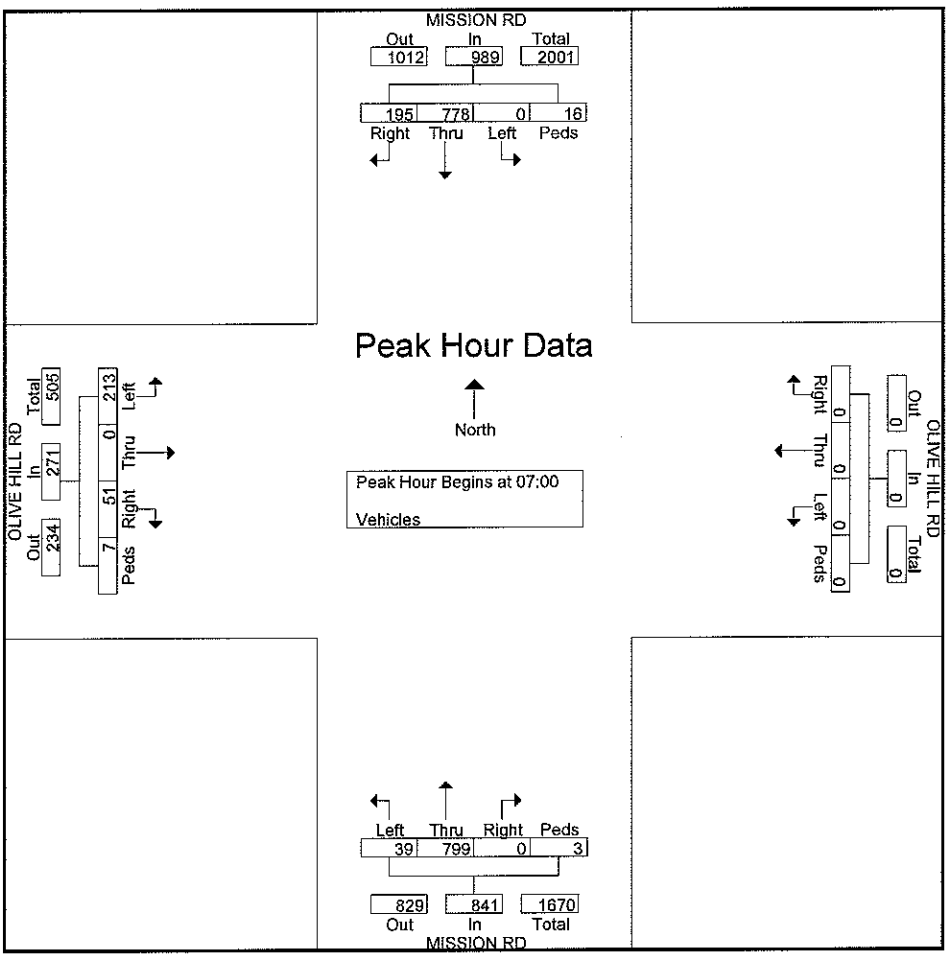

True Count

3401 First Ave. #123
San Diego, CA 92103

File Name : 1099.03.MISSION RD.OLIVE HILL RD
Site Code : 00000000
Start Date : 10/17/2007
Page No : 3

	MISSION RD Southbound					OLIVE HILL RD Westbound					MISSION RD Northbound					OLIVE HILL RD Eastbound					
Start Time	Left	Thru	Right	Peds	App. Total	Left	Thru	Right	Peds	App. Total	Left	Thru	Right	Peds	App. Total	Left	Thru	Right	Peds	App. Total	Int. Total
Peak Hour Analysis From 12:15 to 17:45 - Peak 1 of 1																					
Peak Hour for Entire Intersection Begins at 16:30																					
16:30	0	174	47	**1**	222	0	0	0	0	0	9	211	0	0	220	**122**	0	15	2	**139**	581
16:45	0	**224**	**77**	0	**301**	0	0	0	0	0	11	**244**	0	0	**255**	80	0	4	1	85	**641**
17:00	0	196	66	0	262	0	0	0	0	0	**21**	204	0	0	225	74	0	10	**4**	88	575
17:15	0	206	60	0	266	0	0	0	0	0	11	207	0	0	218	85	0	**16**	1	102	586
Total Volume	0	800	250	1	1051	0	0	0	0	0	52	866	0	0	918	361	0	45	8	414	2383
% App. Total	0	76.1	23.8	0.1		0	0	0	0		5.7	94.3	0	0		87.2	0	10.9	1.9		
PHF	.000	.893	.812	.250	.873	.000	.000	.000	.000	.000	.619	.887	.000	.000	.900	.740	.000	.703	.500	.745	.929

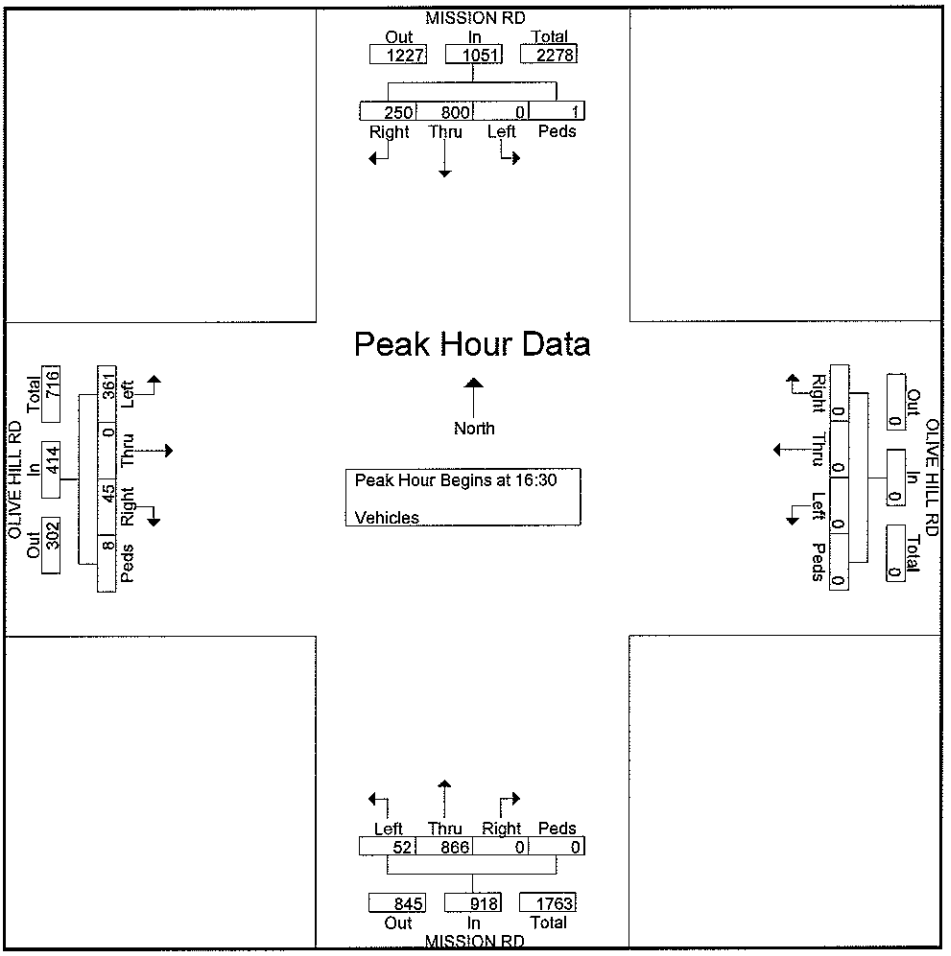

APPENDIX D

Existing Conditions
HCM Worksheets

ex am Fri Feb 8, 2008 12:16:44 Page 1-1

Pacifica Estates Traffic Impact Study
Existing AM Peak Hour Conditions

Scenario Report

Scenario:	ex am
Command:	ex am
Volume:	ex am
Geometry:	existing
Impact Fee:	Default Impact Fee
Trip Generation:	none
Trip Distribution:	none
Paths:	Default Paths
Routes:	Default Routes
Configuration:	ex am

ex am Fri Feb 8, 2008 12:16:45 Page 2-1

Pacifica Estates Traffic Impact Study
Existing AM Peak Hour Conditions

Impact Analysis Report
Level Of Service

Intersection	Base LOS	Base Del/ Veh	Base V/ C	Future LOS	Future Del/ Veh	Future V/ C	Change in D/V
# 1 Southbound Mission Road / Air	C	17.7	0.000	C	17.7	0.000	+ 0.000
# 2 Northbound Mission Road / Air	B	12.3	0.000	B	12.3	0.000	+ 0.000
# 3 Mission Road / Sterling Bridge	A	6.1	0.356	A	6.1	0.356	+ 0.000
# 4 Mission Road / Stagecoach Lane	C	20.2	0.627	C	20.2	0.627	+ 0.000
# 5 Mission Road / Olive Hill Road	B	11.9	0.472	B	11.9	0.472	+ 0.000

ex am Fri Feb 8, 2008 12:16:45 Page 3-1

Pacifica Estates Traffic Impact Study
Existing AM Peak Hour Conditions

Level Of Service Computation Report
2000 HCM Unsignalized Method (Future Volume Alternative)

Intersection #1 Southbound Mission Road / Air Park Road

Average Delay (sec/veh): 0.4 Worst Case Level Of Service: C[17.7]

Approach:	North Bound				South Bound				East Bound				West Bound			
Movement:	L	T	R		L	T	R		L	T	R		L	T	R	
Control:	Uncontrolled				Uncontrolled				Stop Sign				Stop Sign			
Rights:	Include				Include				Include				Include			
Lanes:	1	0	0	0	0	0	1	1	0	0	0	1!	0	0	0	0	0
Volume Module:																	
Base Vol:	26	0	0	0	1040	1	5	0	4	0	0	0					
Growth Adj:	1.00	1.00	1.00	1.00	1.00	1.00	1.00	1.00	1.00	1.00	1.00	1.00					
Initial Bse:	26	0	0	0	1040	1	5	0	4	0	0	0					
Added Vol:	0	0	0	0	0	0	0	0	0	0	0	0					
PasserByVol:	0	0	0	0	0	0	0	0	0	0	0	0					
Initial Fut:	26	0	0	0	1040	1	5	0	4	0	0	0					
User Adj:	1.00	1.00	1.00	1.00	1.00	1.00	1.00	1.00	1.00	1.00	1.00	1.00					
PHF Adj:	0.95	0.95	0.95	0.95	0.95	0.95	0.95	0.95	0.95	0.95	0.95	0.95					
PHF Volume:	27	0	0	0	1095	1	5	0	4	0	0	0					
Reduct Vol:	0	0	0	0	0	0	0	0	0	0	0	0					
Final Vol.:	27	0	0	0	1095	1	5	0	4	0	0	0					
Critical Gap Module:																	
Critical Gp:	4.1	xxxx	xxxxx	xxxxx	xxxx	xxxxx	6.4	xxxx	6.2	xxxxx	xxxx	xxxxx					
FollowUpTim:	2.2	xxxx	xxxxx	xxxxx	xxxx	xxxxx	3.5	xxxx	3.3	xxxxx	xxxx	xxxxx					
Capacity Module:																	
Cnflict Vol:	1096	xxxx	xxxxx	xxxx	xxxx	xxxxx	1150	xxxx	548	xxxx	xxxx	xxxxx					
Potent Cap.:	644	xxxx	xxxxx	xxxx	xxxx	xxxxx	221	xxxx	540	xxxx	xxxx	xxxxx					
Move Cap.:	644	xxxx	xxxxx	xxxx	xxxx	xxxxx	214	xxxx	540	xxxx	xxxx	xxxxx					
Volume/Cap:	0.04	xxxx	xxxx	xxxx	xxxx	xxxx	0.02	xxxx	0.01	xxxx	xxxx	xxxx					
Level Of Service Module:																	
2Way95thQ:	0.1	xxxx	xxxxx	xxxx	xxxx	xxxxx	xxxx	xxxx	xxxxx	xxxx	xxxx	xxxxx					
Control Del:	10.8	xxxx	xxxxx	xxxxx	xxxx	xxxxx	xxxxx	xxxx	xxxxx	xxxxx	xxxx	xxxxx					
LOS by Move:	B	*	*	*	*	*	*	*	*	*	*	*					
Movement:	LT	LTR	RT	LT	LTR	RT	LT	LTR	RT	LT	LTR	RT					
Shared Cap.:	xxxx	xxxx	xxxxx	xxxx	xxxx	xxxxx	xxxx	292	xxxxx	xxxx	xxxx	xxxxx					
SharedQueue:	xxxxx	xxxx	xxxxx	xxxxx	xxxx	xxxxx	xxxxx	0.1	xxxxx	xxxxx	xxxx	xxxxx					
Shrd ConDel:	xxxxx	xxxx	xxxxx	xxxxx	xxxx	xxxxx	xxxxx	17.7	xxxxx	xxxxx	xxxx	xxxxx					
Shared LOS:	*	*	*	*	*	*	*	C	*	*	*	*					
ApproachDel:	xxxxxx			xxxxxx			17.7			xxxxxx							
ApproachLOS:	*			*			C			*							

Note: Queue reported is the number of cars per lane.

ex am Fri Feb 8, 2008 12:16:45 Page 4-1

Pacifica Estates Traffic Impact Study
Existing AM Peak Hour Conditions

Level Of Service Computation Report
2000 HCM Unsignalized Method (Future Volume Alternative)

Intersection #2 Northbound Mission Road / Air Park Road

Average Delay (sec/veh): 0.3 Worst Case Level Of Service: B[12.3]

Approach:	North Bound				South Bound				East Bound				West Bound			
Movement:	L	T	R		L	T	R		L	T	R		L	T	R	
Control:	Uncontrolled				Uncontrolled				Stop Sign				Stop Sign			
Rights:	Include				Include				Include				Include			
Lanes:	1	0	2	0	0	0	0	0	0	0	1	0	0	0	0	0	0
Volume Module:																	
Base Vol:	26	907	0	0	0	0	5	0	0	0	0	0					
Growth Adj:	1.00	1.00	1.00	1.00	1.00	1.00	1.00	1.00	1.00	1.00	1.00	1.00					
Initial Bse:	26	907	0	0	0	0	5	0	0	0	0	0					
Added Vol:	0	0	0	0	0	0	0	0	0	0	0	0					
PasserByVol:	0	0	0	0	0	0	0	0	0	0	0	0					
Initial Fut:	26	907	0	0	0	0	5	0	0	0	0	0					
User Adj:	1.00	1.00	1.00	1.00	1.00	1.00	1.00	1.00	1.00	1.00	1.00	1.00					
PHF Adj:	0.95	0.95	0.95	0.95	0.95	0.95	0.95	0.95	0.95	0.95	0.95	0.95					
PHF Volume:	27	955	0	0	0	0	5	0	0	0	0	0					
Reduct Vol:	0	0	0	0	0	0	0	0	0	0	0	0					
Final Vol.:	27	955	0	0	0	0	5	0	0	0	0	0					
Critical Gap Module:																	
Critical Gp:	4.1	xxxx	xxxxx	xxxxx	xxxx	xxxxx	6.4	xxxx	xxxxx	xxxxx	xxxx	xxxxx					
FollowUpTim:	2.2	xxxx	xxxxx	xxxxx	xxxx	xxxxx	3.5	xxxx	xxxxx	xxxxx	xxxx	xxxxx					
Capacity Module:																	
Cnflict Vol:	0	xxxx	xxxxx	xxxx	xxxx	xxxxx	532	xxxx	xxxxx	xxxx	xxxx	xxxxx					
Potent Cap.:	900	xxxx	xxxxx	xxxx	xxxx	xxxxx	512	xxxx	xxxxx	xxxx	xxxx	xxxxx					
Move Cap.:	900	xxxx	xxxxx	xxxx	xxxx	xxxxx	500	xxxx	xxxxx	xxxx	xxxx	xxxxx					
Volume/Cap:	0.03	xxxx	xxxx	xxxx	xxxx	xxxx	0.01	xxxx	xxxx	xxxx	xxxx	xxxx					
Level Of Service Module:																	
2Way95thQ:	0.1	xxxx	xxxxx	xxxx	xxxx	xxxxx	0.0	xxxx	xxxxx	xxxx	xxxx	xxxxx					
Control Del:	9.1	xxxx	xxxxx	xxxxx	xxxx	xxxxx	12.3	xxxx	xxxxx	xxxxx	xxxx	xxxxx					
LOS by Move:	A	*	*	*	*	*	B	*	*	*	*	*					
Movement:	LT	LTR	RT	LT	LTR	RT	LT	LTR	RT	LT	LTR	RT					
Shared Cap.:	xxxx	xxxx	xxxxx	xxxx	xxxx	xxxxx	xxxx	xxxx	xxxxx	xxxx	xxxx	xxxxx					
SharedQueue:	xxxxx	xxxx	xxxxx	xxxxx	xxxx	xxxxx	xxxxx	xxxx	xxxxx	xxxxx	xxxx	xxxxx					
Shrd ConDel:	xxxxx	xxxx	xxxxx	xxxxx	xxxx	xxxxx	xxxxx	xxxx	xxxxx	xxxxx	xxxx	xxxxx					
Shared LOS:	*	*	*	*	*	*	*	*	*	*	*	*					
ApproachDel:	xxxxxx			xxxxxx			12.3			xxxxxx							
ApproachLOS:	*			*			B			*							

Note: Queue reported is the number of cars per lane.

ex am Fri Feb 8, 2008 12:16:45 Page 5-1

Pacifica Estates Traffic Impact Study
Existing AM Peak Hour Conditions

Level Of Service Computation Report
2000 HCM Operations Method (Future Volume Alternative)

****

Intersection #3 Mission Road / Sterling Bridge Rd.

****

Cycle (sec): 90 Critical Vol./Cap.(X): 0.356
Loss Time (sec): 12 (Y+R=4.0 sec) Average Delay (sec/veh): 6.1
Optimal Cycle: 33 Level Of Service: A

****

Approach:	North Bound			South Bound			East Bound			West Bound		
Movement:	L	T	R	L	T	R	L	T	R	L	T	R
Control:	Protected			Protected			Split Phase			Split Phase		
Rights:	Include			Include			Include			Include		
Min. Green:	0	10	10	5	10	10	0	0	0	5	0	5
Lanes:	0 0	2 0	1	1 0	2 0	0	0 0	0 0	0	1 0	0 0	1
Volume Module:												
Base Vol:	0	897	24	22	961	0	0	0	0	59	0	33
Growth Adj:	1.00	1.00	1.00	1.00	1.00	1.00	1.00	1.00	1.00	1.00	1.00	1.00
Initial Bse:	0	897	24	22	961	0	0	0	0	59	0	33
Added Vol:	0	0	0	0	0	0	0	0	0	0	0	0
PasserByVol:	0	0	0	0	0	0	0	0	0	0	0	0
Initial Fut:	0	897	24	22	961	0	0	0	0	59	0	33
User Adj:	1.00	1.00	1.00	1.00	1.00	1.00	1.00	1.00	1.00	1.00	1.00	1.00
PHF Adj:	0.95	0.95	0.95	0.95	0.95	0.95	0.95	0.95	0.95	0.95	0.95	0.95
PHF Volume:	0	944	25	23	1012	0	0	0	0	62	0	35
Reduct Vol:	0	0	0	0	0	0	0	0	0	0	0	0
Reduced Vol:	0	944	25	23	1012	0	0	0	0	62	0	35
PCE Adj:	1.00	1.00	1.00	1.00	1.00	1.00	1.00	1.00	1.00	1.00	1.00	1.00
MLF Adj:	1.00	1.00	1.00	1.00	1.00	1.00	1.00	1.00	1.00	1.00	1.00	1.00
Final Vol.:	0	944	25	23	1012	0	0	0	0	62	0	35
Saturation Flow Module:												
Sat/Lane:	1900	1900	1900	1900	1900	1900	1900	1900	1900	1900	1900	1900
Adjustment:	1.00	0.95	0.85	0.95	0.95	1.00	1.00	1.00	1.00	0.95	1.00	0.85
Lanes:	0.00	2.00	1.00	1.00	2.00	0.00	0.00	0.00	0.00	1.00	0.00	1.00
Final Sat.:	0	3610	1615	1805	3610	0	0	0	0	1805	0	1615
Capacity Analysis Module:												
Vol/Sat:	0.00	0.26	0.02	0.01	0.28	0.00	0.00	0.00	0.00	0.03	0.00	0.02
Crit Moves:		****		****						****		
Green/Cycle:	0.00	0.72	0.72	0.06	0.77	0.00	0.00	0.00	0.00	0.09	0.00	0.09
Volume/Cap:	0.00	0.36	0.02	0.23	0.36	0.00	0.00	0.00	0.00	0.36	0.00	0.23
Delay/Veh:	0.0	5.0	3.7	41.8	3.3	0.0	0.0	0.0	0.0	39.6	0.0	38.5
User DelAdj:	1.00	1.00	1.00	1.00	1.00	1.00	1.00	1.00	1.00	1.00	1.00	1.00
AdjDel/Veh:	0.0	5.0	3.7	41.8	3.3	0.0	0.0	0.0	0.0	39.6	0.0	38.5
LOS by Move:	A	A	A	D	A	A	A	A	A	D	A	D
HCM2kAvgQ:	0	5	0	1	5	0	0	0	0	2	0	1

****

Note: Queue reported is the number of cars per lane.

ex am Fri Feb 8, 2008 12:16:45 Page 6-1

Pacifica Estates Traffic Impact Study
Existing AM Peak Hour Conditions

Level Of Service Computation Report
2000 HCM Operations Method (Future Volume Alternative)

****

Intersection #4 Mission Road / Stagecoach Lane

****

Cycle (sec): 90 Critical Vol./Cap.(X): 0.627
Loss Time (sec): 12 (Y+R=4.0 sec) Average Delay (sec/veh): 20.2
Optimal Cycle: 50 Level Of Service: C

****

Approach:	North Bound			South Bound			East Bound			West Bound		
Movement:	L	T	R	L	T	R	L	T	R	L	T	R
Control:	Protected			Protected			Permitted			Permitted		
Rights:	Include			Include			Include			Include		
Min. Green:	5	10	10	5	10	10	10	10	10	10	10	10
Lanes:	1 0	1 1	0	2 0	1 1	0	0 0	1! 0	0	1 0	0 1	0
Volume Module:												
Base Vol:	0	675	310	304	708	0	0	0	0	209	0	201
Growth Adj:	1.00	1.00	1.00	1.00	1.00	1.00	1.00	1.00	1.00	1.00	1.00	1.00
Initial Bse:	0	675	310	304	708	0	0	0	0	209	0	201
Added Vol:	0	0	0	0	0	0	0	0	0	0	0	0
PasserByVol:	0	0	0	0	0	0	0	0	0	0	0	0
Initial Fut:	0	675	310	304	708	0	0	0	0	209	0	201
User Adj:	1.00	1.00	1.00	1.00	1.00	1.00	1.00	1.00	1.00	1.00	1.00	1.00
PHF Adj:	0.95	0.95	0.95	0.95	0.95	0.95	0.95	0.95	0.95	0.95	0.95	0.95
PHF Volume:	0	711	326	320	745	0	0	0	0	220	0	212
Reduct Vol:	0	0	0	0	0	0	0	0	0	0	0	0
Reduced Vol:	0	711	326	320	745	0	0	0	0	220	0	212
PCE Adj:	1.00	1.00	1.00	1.00	1.00	1.00	1.00	1.00	1.00	1.00	1.00	1.00
MLF Adj:	1.00	1.00	1.00	1.00	1.00	1.00	1.00	1.00	1.00	1.00	1.00	1.00
Final Vol.:	0	711	326	320	745	0	0	0	0	220	0	212
Saturation Flow Module:												
Sat/Lane:	1900	1900	1900	1900	1900	1900	1900	1900	1900	1900	1900	1900
Adjustment:	1.00	0.91	0.91	0.92	0.95	0.95	1.00	1.00	1.00	0.77	1.00	0.85
Lanes:	1.00	1.37	0.63	2.00	2.00	0.00	0.00	1.00	0.00	1.00	0.00	1.00
Final Sat.:	1900	2358	1083	3502	3610	0	0	1900	0	1461	0	1615
Capacity Analysis Module:												
Vol/Sat:	0.00	0.30	0.30	0.09	0.21	0.00	0.00	0.00	0.00	0.15	0.00	0.13
Crit Moves:		****		****						****		
Green/Cycle:	0.00	0.48	0.48	0.15	0.63	0.00	0.00	0.00	0.00	0.24	0.00	0.24
Volume/Cap:	0.00	0.63	0.63	0.63	0.33	0.00	0.00	0.00	0.00	0.63	0.00	0.55
Delay/Veh:	0.0	18.1	18.1	38.6	8.0	0.0	0.0	0.0	0.0	34.2	0.0	31.5
User DelAdj:	1.00	1.00	1.00	1.00	1.00	1.00	1.00	1.00	1.00	1.00	1.00	1.00
AdjDel/Veh:	0.0	18.1	18.1	38.6	8.0	0.0	0.0	0.0	0.0	34.2	0.0	31.5
LOS by Move:	A	B	B	D	A	A	A	A	A	C	A	C
HCM2kAvgQ:	0	12	12	5	5	0	0	0	0	6	0	6

****

Note: Queue reported is the number of cars per lane.

ex am Fri Feb 8, 2008 12:16:45 Page 7-1

Pacifica Estates Traffic Impact Study
Existing AM Peak Hour Conditions

Level Of Service Computation Report
2000 HCM Operations Method (Future Volume Alternative)

Intersection #5 Mission Road / Olive Hill Road

Cycle (sec): 90 Critical Vol./Cap.(X): 0.472
Loss Time (sec): 12 (Y+R=4.0 sec) Average Delay (sec/veh): 11.9
Optimal Cycle: 39 Level Of Service: B

Approach:	North Bound			South Bound			East Bound			West Bound		
Movement:	L	T	R	L	T	R	L	T	R	L	T	R
Control:	Protected			Protected			Split Phase			Split Phase		
Rights:	Include			Include			Include			Include		
Min. Green:	5	10	0	0	10	10	5	0	5	0	0	0
Lanes:	1 0 2	0 0		0 0 1	1 0		1 0 1!	0 0		0 0 0	0 0	
Volume Module:												
Base Vol:	39	799	0	0	778	195	213	0	51	0	0	0
Growth Adj:	1.00	1.00	1.00	1.00	1.00	1.00	1.00	1.00	1.00	1.00	1.00	1.00
Initial Bse:	39	799	0	0	778	195	213	0	51	0	0	0
Added Vol:	0	0	0	0	0	0	0	0	0	0	0	0
PasserByVol:	0	0	0	0	0	0	0	0	0	0	0	0
Initial Fut:	39	799	0	0	778	195	213	0	51	0	0	0
User Adj:	1.00	1.00	1.00	1.00	1.00	1.00	1.00	1.00	1.00	1.00	1.00	1.00
PHF Adj:	0.95	0.95	0.95	0.95	0.95	0.95	0.95	0.95	0.95	0.95	0.95	0.95
PHF Volume:	41	841	0	0	819	205	224	0	54	0	0	0
Reduct Vol:	0	0	0	0	0	0	0	0	0	0	0	0
Reduced Vol:	41	841	0	0	819	205	224	0	54	0	0	0
PCE Adj:	1.00	1.00	1.00	1.00	1.00	1.00	1.00	1.00	1.00	1.00	1.00	1.00
MLF Adj:	1.00	1.00	1.00	1.00	1.00	1.00	1.00	1.00	1.00	1.00	1.00	1.00
Final Vol.:	41	841	0	0	819	205	224	0	54	0	0	0
Saturation Flow Module:												
Sat/Lane:	1900	1900	1900	1900	1900	1900	1900	1900	1900	1900	1900	1900
Adjustment:	0.95	0.95	1.00	1.00	0.92	0.92	0.93	1.00	0.93	1.00	1.00	1.00
Lanes:	1.00	2.00	0.00	0.00	1.60	0.40	1.68	0.00	0.32	0.00	0.00	0.00
Final Sat.:	1805	3610	0	0	2800	702	2972	0	574	0	0	0
Capacity Analysis Module:												
Vol/Sat:	0.02	0.23	0.00	0.00	0.29	0.29	0.08	0.00	0.09	0.00	0.00	0.00
Crit Moves:	****				****				****			
Green/Cycle:	0.06	0.67	0.00	0.00	0.61	0.61	0.20	0.00	0.20	0.00	0.00	0.00
Volume/Cap:	0.41	0.35	0.00	0.00	0.48	0.48	0.38	0.00	0.48	0.00	0.00	0.00
Delay/Veh:	43.8	6.5	0.0	0.0	9.6	9.6	31.8	0.0	32.7	0.0	0.0	0.0
User DelAdj:	1.00	1.00	1.00	1.00	1.00	1.00	1.00	1.00	1.00	1.00	1.00	1.00
AdjDel/Veh:	43.8	6.5	0.0	0.0	9.6	9.6	31.8	0.0	32.7	0.0	0.0	0.0
LOS by Move:	D	A	A	A	A	A	C	A	C	A	A	A
HCM2kAvgQ:	2	5	0	0	8	8	4	0	5	0	0	0

Note: Queue reported is the number of cars per lane.

Traffix 7.8.0115 (c) 2006 Dowling Assoc. Licensed to RBF CONSULTING, IRVINE

ex pm Fri Feb 8, 2008 12:17:01 Page 1-1

Pacifica Estates Traffic Impact Study
Existing PM Peak Hour Conditions

Scenario Report

Scenario:	ex pm
Command:	ex pm
Volume:	ex pm
Geometry:	existing
Impact Fee:	Default Impact Fee
Trip Generation:	none
Trip Distribution:	none
Paths:	Default Paths
Routes:	Default Routes
Configuration:	ex pm

ex pm Fri Feb 8, 2008 12:17:01 Page 2-1

Pacifica Estates Traffic Impact Study
Existing PM Peak Hour Conditions

Impact Analysis Report
Level Of Service

Intersection	Base LOS	Base Del/ Veh	Base V/ C	Future LOS	Future Del/ Veh	Future V/ C	Change in D/V
# 1 Southbound Mission Road / Air	C	16.2	0.000	C	16.2	0.000	+ 0.000
# 2 Northbound Mission Road / Air	B	13.6	0.000	B	13.6	0.000	+ 0.000
# 3 Mission Road / Sterling Bridge	A	5.6	0.437	A	5.6	0.437	+ 0.000
# 4 Mission Road / Stagecoach Lane	B	19.4	0.698	B	19.4	0.698	+ 0.000
# 5 Mission Road / Olive Hill Road	B	14.8	0.555	B	14.8	0.555	+ 0.000

ex pm Fri Feb 8, 2008 12:17:01 Page 3-1

Pacifica Estates Traffic Impact Study
Existing PM Peak Hour Conditions

Level Of Service Computation Report
2000 HCM Unsignalized Method (Future Volume Alternative)

Intersection #1 Southbound Mission Road / Air Park Road

Average Delay (sec/veh): 0.5 Worst Case Level Of Service: C[16.2]

Approach:	North Bound				South Bound				East Bound				West Bound			
Movement:	L	T	R		L	T	R		L	T	R		L	T	R	
Control:	Uncontrolled				Uncontrolled				Stop Sign				Stop Sign			
Rights:	Include				Include				Include				Include			
Lanes:	1 0	0	0	0	0 0	1	1	0	0 0	1!	0	0	0 0	0	0	0
Volume Module:																
Base Vol:	16	0	0	0	1051	4	9	0	15	0	0	0				
Growth Adj:	1.00	1.00	1.00	1.00	1.00	1.00	1.00	1.00	1.00	1.00	1.00	1.00				
Initial Bse:	16	0	0	0	1051	4	9	0	15	0	0	0				
Added Vol:	0	0	0	0	0	0	0	0	0	0	0	0				
PasserByVol:	0	0	0	0	0	0	0	0	0	0	0	0				
Initial Fut:	16	0	0	0	1051	4	9	0	15	0	0	0				
User Adj:	1.00	1.00	1.00	1.00	1.00	1.00	1.00	1.00	1.00	1.00	1.00	1.00				
PHF Adj:	0.95	0.95	0.95	0.95	0.95	0.95	0.95	0.95	0.95	0.95	0.95	0.95				
PHF Volume:	17	0	0	0	1106	4	9	0	16	0	0	0				
Reduct Vol:	0	0	0	0	0	0	0	0	0	0	0	0				
Final Vol.:	17	0	0	0	1106	4	9	0	16	0	0	0				
Critical Gap Module:																
Critical Gp:	4.1	xxxx	xxxxx	xxxxx	xxxx	xxxxx	6.4	xxxx	6.2	xxxxx	xxxx	xxxxx				
FollowUpTim:	2.2	xxxx	xxxxx	xxxxx	xxxx	xxxxx	3.5	xxxx	3.3	xxxxx	xxxx	xxxxx				
Capacity Module:																
Cnflict Vol:	1111	xxxx	xxxxx	xxxx	xxxx	xxxxx	1142	xxxx	555	xxxx	xxxx	xxxxx				
Potent Cap.:	636	xxxx	xxxxx	xxxx	xxxx	xxxxx	224	xxxx	535	xxxx	xxxx	xxxxx				
Move Cap.:	636	xxxx	xxxxx	xxxx	xxxx	xxxxx	219	xxxx	535	xxxx	xxxx	xxxxx				
Volume/Cap:	0.03	xxxx	xxxx	xxxx	xxxx	xxxx	0.04	xxxx	0.03	xxxx	xxxx	xxxx				
Level Of Service Module:																
2Way95thQ:	0.1	xxxx	xxxxx	xxxx	xxxx	xxxxx	xxxx	xxxx	xxxxx	xxxx	xxxx	xxxxx				
Control Del:	10.8	xxxx	xxxxx	xxxxx	xxxx	xxxxx	xxxxx	xxxx	xxxxx	xxxxx	xxxx	xxxxx				
LOS by Move:	B	*	*	*	*	*	*	*	*	*	*	*				
Movement:	LT	LTR	RT	LT	LTR	RT	LT	LTR	RT	LT	LTR	RT				
Shared Cap.:	xxxx	xxxx	xxxxx	xxxx	xxxx	xxxxx	xxxx	347	xxxxx	xxxx	xxxx	xxxxx				
SharedQueue:	xxxxx	xxxx	xxxxx	xxxxx	xxxx	xxxxx	xxxxx	0.2	xxxxx	xxxxx	xxxx	xxxxx				
Shrd ConDel:	xxxxx	xxxx	xxxxx	xxxxx	xxxx	xxxxx	xxxxx	16.2	xxxxx	xxxxx	xxxx	xxxxx				
Shared LOS:	*	*	*	*	*	*	*	C	*	*	*	*				
ApproachDel:	xxxxxx			xxxxxx			16.2			xxxxxx						
ApproachLOS:	*			*			C			*						

Note: Queue reported is the number of cars per lane.

ex pm Fri Feb 8, 2008 12:17:01 Page 4-1

Pacifica Estates Traffic Impact Study
Existing PM Peak Hour Conditions

Level Of Service Computation Report
2000 HCM Unsignalized Method (Future Volume Alternative)

Intersection #2 Northbound Mission Road / Air Park Road

Average Delay (sec/veh): 0.2 Worst Case Level Of Service: B[13.6]

Approach:	North Bound				South Bound				East Bound				West Bound			
Movement:	L	T	R		L	T	R		L	T	R		L	T	R	
Control:	Uncontrolled				Uncontrolled				Stop Sign				Stop Sign			
Rights:	Include				Include				Include				Include			
Lanes:	1 0	2	0	0	0 0	0	0	0	1 0	0	0	0	0 0	0	0	0
Volume Module:																
Base Vol:	16	1186	0	0	0	0	9	0	0	0	0	0				
Growth Adj:	1.00	1.00	1.00	1.00	1.00	1.00	1.00	1.00	1.00	1.00	1.00	1.00				
Initial Bse:	16	1186	0	0	0	0	9	0	0	0	0	0				
Added Vol:	0	0	0	0	0	0	0	0	0	0	0	0				
PasserByVol:	0	0	0	0	0	0	0	0	0	0	0	0				
Initial Fut:	16	1186	0	0	0	0	9	0	0	0	0	0				
User Adj:	1.00	1.00	1.00	1.00	1.00	1.00	1.00	1.00	1.00	1.00	1.00	1.00				
PHF Adj:	0.95	0.95	0.95	0.95	0.95	0.95	0.95	0.95	0.95	0.95	0.95	0.95				
PHF Volume:	17	1248	0	0	0	0	9	0	0	0	0	0				
Reduct Vol:	0	0	0	0	0	0	0	0	0	0	0	0				
Final Vol.:	17	1248	0	0	0	0	9	0	0	0	0	0				
Critical Gap Module:																
Critical Gp:	4.1	xxxx	xxxxx	xxxxx	xxxx	xxxxx	6.4	xxxx	xxxxx	xxxxx	xxxx	xxxxx				
FollowUpTim:	2.2	xxxx	xxxxx	xxxxx	xxxx	xxxxx	3.5	xxxx	xxxxx	xxxxx	xxxx	xxxxx				
Capacity Module:																
Cnflict Vol:	0	xxxx	xxxxx	xxxx	xxxx	xxxxx	658	xxxx	xxxxx	xxxx	xxxx	xxxxx				
Potent Cap.:	900	xxxx	xxxxx	xxxx	xxxx	xxxxx	432	xxxx	xxxxx	xxxx	xxxx	xxxxx				
Move Cap.:	900	xxxx	xxxxx	xxxx	xxxx	xxxxx	426	xxxx	xxxxx	xxxx	xxxx	xxxxx				
Volume/Cap:	0.02	xxxx	xxxx	xxxx	xxxx	xxxx	0.02	xxxx	xxxx	xxxx	xxxx	xxxx				
Level Of Service Module:																
2Way95thQ:	0.1	xxxx	xxxxx	xxxx	xxxx	xxxxx	0.1	xxxx	xxxxx	xxxx	xxxx	xxxxx				
Control Del:	9.1	xxxx	xxxxx	xxxxx	xxxx	xxxxx	13.6	xxxx	xxxxx	xxxxx	xxxx	xxxxx				
LOS by Move:	A	*	*	*	*	*	B	*	*	*	*	*				
Movement:	LT	LTR	RT	LT	LTR	RT	LT	LTR	RT	LT	LTR	RT				
Shared Cap.:	xxxx	xxxx	xxxxx	xxxx	xxxx	xxxxx	xxxx	xxxx	xxxxx	xxxx	xxxx	xxxxx				
SharedQueue:	xxxxx	xxxx	xxxxx	xxxxx	xxxx	xxxxx	xxxxx	xxxx	xxxxx	xxxxx	xxxx	xxxxx				
Shrd ConDel:	xxxxx	xxxx	xxxxx	xxxxx	xxxx	xxxxx	xxxxx	xxxx	xxxxx	xxxxx	xxxx	xxxxx				
Shared LOS:	*	*	*	*	*	*	*	*	*	*	*	*				
ApproachDel:	xxxxxx			xxxxxx			13.6			xxxxxx						
ApproachLOS:	*			*			B			*						

Note: Queue reported is the number of cars per lane.

ex pm Fri Feb 8, 2008 12:17:01 Page 5-1

Pacifica Estates Traffic Impact Study
Existing PM Peak Hour Conditions

Level Of Service Computation Report
2000 HCM Operations Method (Future Volume Alternative)

Intersection #3 Mission Road / Sterling Bridge Rd.

Cycle (sec): 90 Critical Vol./Cap.(X): 0.437
Loss Time (sec): 12 (Y+R=4.0 sec) Average Delay (sec/veh): 5.6
Optimal Cycle: 37 Level Of Service: A

Approach:	North Bound			South Bound			East Bound			West Bound		
Movement:	L	T	R	L	T	R	L	T	R	L	T	R
Control:	Protected			Protected			Split Phase			Split Phase		
Rights:	Include			Include			Include			Include		
Min. Green:	0	10	10	5	10	10	0	0	0	5	0	5
Lanes:	0 0	2 0	1	1 0	2 0	0	0 0	0 0	0	1 0	0 0	1
Volume Module:												
Base Vol:	0	1137	57	58	980	0	0	0	0	23	0	31
Growth Adj:	1.00	1.00	1.00	1.00	1.00	1.00	1.00	1.00	1.00	1.00	1.00	1.00
Initial Bse:	0	1137	57	58	980	0	0	0	0	23	0	31
Added Vol:	0	0	0	0	0	0	0	0	0	0	0	0
PasserByVol:	0	0	0	0	0	0	0	0	0	0	0	0
Initial Fut:	0	1137	57	58	980	0	0	0	0	23	0	31
User Adj:	1.00	1.00	1.00	1.00	1.00	1.00	1.00	1.00	1.00	1.00	1.00	1.00
PHF Adj:	0.95	0.95	0.95	0.95	0.95	0.95	0.95	0.95	0.95	0.95	0.95	0.95
PHF Volume:	0	1197	60	61	1032	0	0	0	0	24	0	33
Reduct Vol:	0	0	0	0	0	0	0	0	0	0	0	0
Reduced Vol:	0	1197	60	61	1032	0	0	0	0	24	0	33
PCE Adj:	1.00	1.00	1.00	1.00	1.00	1.00	1.00	1.00	1.00	1.00	1.00	1.00
MLF Adj:	1.00	1.00	1.00	1.00	1.00	1.00	1.00	1.00	1.00	1.00	1.00	1.00
Final Vol.:	0	1197	60	61	1032	0	0	0	0	24	0	33
Saturation Flow Module:												
Sat/Lane:	1900	1900	1900	1900	1900	1900	1900	1900	1900	1900	1900	1900
Adjustment:	1.00	0.95	0.85	0.95	0.95	1.00	1.00	1.00	1.00	0.95	1.00	0.85
Lanes:	0.00	2.00	1.00	1.00	2.00	0.00	0.00	0.00	0.00	1.00	0.00	1.00
Final Sat.:	0	3610	1615	1805	3610	0	0	0	0	1805	0	1615
Capacity Analysis Module:												
Vol/Sat:	0.00	0.33	0.04	0.03	0.29	0.00	0.00	0.00	0.00	0.01	0.00	0.02
Crit Moves:		****		****						****		
Green/Cycle:	0.00	0.74	0.74	0.08	0.81	0.00	0.00	0.00	0.00	0.06	0.00	0.06
Volume/Cap:	0.00	0.45	0.05	0.45	0.35	0.00	0.00	0.00	0.00	0.24	0.00	0.36
Delay/Veh:	0.0	4.8	3.3	42.2	2.3	0.0	0.0	0.0	0.0	41.9	0.0	43.5
User DelAdj:	1.00	1.00	1.00	1.00	1.00	1.00	1.00	1.00	1.00	1.00	1.00	1.00
AdjDel/Veh:	0.0	4.8	3.3	42.2	2.3	0.0	0.0	0.0	0.0	41.9	0.0	43.5
LOS by Move:	A	A	A	D	A	A	A	A	A	D	A	D
HCM2kAvgQ:	0	7	0	2	4	0	0	0	0	1	0	1

Note: Queue reported is the number of cars per lane.

ex pm Fri Feb 8, 2008 12:17:02 Page 6-1

Pacifica Estates Traffic Impact Study
Existing PM Peak Hour Conditions

Level Of Service Computation Report
2000 HCM Operations Method (Future Volume Alternative)

Intersection #4 Mission Road / Stagecoach Lane

Cycle (sec): 90 Critical Vol./Cap.(X): 0.698
Loss Time (sec): 12 (Y+R=4.0 sec) Average Delay (sec/veh): 19.4
Optimal Cycle: 58 Level Of Service: B

Approach:	North Bound			South Bound			East Bound			West Bound		
Movement:	L	T	R	L	T	R	L	T	R	L	T	R
Control:	Protected			Protected			Permitted			Permitted		
Rights:	Include			Include			Include			Include		
Min. Green:	5	10	10	5	10	10	10	10	10	10	10	10
Lanes:	1 0	1 1	0	2 0	1 1	0	0 0	1! 0	0	1 0	0 1	0
Volume Module:												
Base Vol:	0	1005	242	211	807	0	0	0	0	232	0	201
Growth Adj:	1.00	1.00	1.00	1.00	1.00	1.00	1.00	1.00	1.00	1.00	1.00	1.00
Initial Bse:	0	1005	242	211	807	0	0	0	0	232	0	201
Added Vol:	0	0	0	0	0	0	0	0	0	0	0	0
PasserByVol:	0	0	0	0	0	0	0	0	0	0	0	0
Initial Fut:	0	1005	242	211	807	0	0	0	0	232	0	201
User Adj:	1.00	1.00	1.00	1.00	1.00	1.00	1.00	1.00	1.00	1.00	1.00	1.00
PHF Adj:	0.95	0.95	0.95	0.95	0.95	0.95	0.95	0.95	0.95	0.95	0.95	0.95
PHF Volume:	0	1058	255	222	849	0	0	0	0	244	0	212
Reduct Vol:	0	0	0	0	0	0	0	0	0	0	0	0
Reduced Vol:	0	1058	255	222	849	0	0	0	0	244	0	212
PCE Adj:	1.00	1.00	1.00	1.00	1.00	1.00	1.00	1.00	1.00	1.00	1.00	1.00
MLF Adj:	1.00	1.00	1.00	1.00	1.00	1.00	1.00	1.00	1.00	1.00	1.00	1.00
Final Vol.:	0	1058	255	222	849	0	0	0	0	244	0	212
Saturation Flow Module:												
Sat/Lane:	1900	1900	1900	1900	1900	1900	1900	1900	1900	1900	1900	1900
Adjustment:	1.00	0.92	0.92	0.92	0.95	0.95	1.00	1.00	1.00	0.77	1.00	0.85
Lanes:	1.00	1.61	0.39	2.00	2.00	0.00	0.00	1.00	0.00	1.00	0.00	1.00
Final Sat.:	1900	2825	680	3502	3610	0	0	1900	0	1461	0	1615
Capacity Analysis Module:												
Vol/Sat:	0.00	0.37	0.37	0.06	0.24	0.00	0.00	0.00	0.00	0.17	0.00	0.13
Crit Moves:		****		****						****		
Green/Cycle:	0.00	0.54	0.54	0.09	0.63	0.00	0.00	0.00	0.00	0.24	0.00	0.24
Volume/Cap:	0.00	0.70	0.70	0.70	0.38	0.00	0.00	0.00	0.00	0.70	0.00	0.55
Delay/Veh:	0.0	16.6	16.6	46.4	8.3	0.0	0.0	0.0	0.0	37.4	0.0	31.6
User DelAdj:	1.00	1.00	1.00	1.00	1.00	1.00	1.00	1.00	1.00	1.00	1.00	1.00
AdjDel/Veh:	0.0	16.6	16.6	46.4	8.3	0.0	0.0	0.0	0.0	37.4	0.0	31.6
LOS by Move:	A	B	B	D	A	A	A	A	A	D	A	C
HCM2kAvgQ:	0	15	15	5	6	0	0	0	0	8	0	6

Note: Queue reported is the number of cars per lane.

ex pm Fri Feb 8, 2008 12:17:02 Page 7-1

Pacifica Estates Traffic Impact Study
Existing PM Peak Hour Conditions

Level Of Service Computation Report
2000 HCM Operations Method (Future Volume Alternative)

Intersection #5 Mission Road / Olive Hill Road

Cycle (sec):	90	Critical Vol./Cap.(X):	0.555
Loss Time (sec):	12 (Y+R=4.0 sec)	Average Delay (sec/veh):	14.8
Optimal Cycle:	44	Level Of Service:	B

Approach:	North Bound			South Bound			East Bound			West Bound		
Movement:	L	T	R	L	T	R	L	T	R	L	T	R
Control:	Protected			Protected			Split Phase			Split Phase		
Rights:	Include			Include			Include			Include		
Min. Green:	5	10	0	0	10	10	5	0	5	0	0	0
Lanes:	1 0 2	0	0	0 0 1	1	0	1 0 1!	0	0	0 0 0	0	0
Volume Module:												
Base Vol:	52	866	0	0	800	250	361	0	45	0	0	0
Growth Adj:	1.00	1.00	1.00	1.00	1.00	1.00	1.00	1.00	1.00	1.00	1.00	1.00
Initial Bse:	52	866	0	0	800	250	361	0	45	0	0	0
Added Vol:	0	0	0	0	0	0	0	0	0	0	0	0
PasserByVol:	0	0	0	0	0	0	0	0	0	0	0	0
Initial Fut:	52	866	0	0	800	250	361	0	45	0	0	0
User Adj:	1.00	1.00	1.00	1.00	1.00	1.00	1.00	1.00	1.00	1.00	1.00	1.00
PHF Adj:	0.95	0.95	0.95	0.95	0.95	0.95	0.95	0.95	0.95	0.95	0.95	0.95
PHF Volume:	55	912	0	0	842	263	380	0	47	0	0	0
Reduct Vol:	0	0	0	0	0	0	0	0	0	0	0	0
Reduced Vol:	55	912	0	0	842	263	380	0	47	0	0	0
PCE Adj:	1.00	1.00	1.00	1.00	1.00	1.00	1.00	1.00	1.00	1.00	1.00	1.00
MLF Adj:	1.00	1.00	1.00	1.00	1.00	1.00	1.00	1.00	1.00	1.00	1.00	1.00
Final Vol.:	55	912	0	0	842	263	380	0	47	0	0	0
Saturation Flow Module:												
Sat/Lane:	1900	1900	1900	1900	1900	1900	1900	1900	1900	1900	1900	1900
Adjustment:	0.95	0.95	1.00	1.00	0.92	0.92	0.94	1.00	0.94	1.00	1.00	1.00
Lanes:	1.00	2.00	0.00	0.00	1.52	0.48	1.80	0.00	0.20	0.00	0.00	0.00
Final Sat.:	1805	3610	0	0	2651	829	3218	0	357	0	0	0
Capacity Analysis Module:												
Vol/Sat:	0.03	0.25	0.00	0.00	0.32	0.32	0.12	0.00	0.13	0.00	0.00	0.00
Crit Moves:	****				****				****			
Green/Cycle:	0.06	0.63	0.00	0.00	0.57	0.57	0.24	0.00	0.24	0.00	0.00	0.00
Volume/Cap:	0.55	0.40	0.00	0.00	0.56	0.56	0.49	0.00	0.56	0.00	0.00	0.00
Delay/Veh:	47.5	8.5	0.0	0.0	12.4	12.4	30.0	0.0	30.9	0.0	0.0	0.0
User DelAdj:	1.00	1.00	1.00	1.00	1.00	1.00	1.00	1.00	1.00	1.00	1.00	1.00
AdjDel/Veh:	47.5	8.5	0.0	0.0	12.4	12.4	30.0	0.0	30.9	0.0	0.0	0.0
LOS by Move:	D	A	A	A	B	B	C	A	C	A	A	A
HCM2kAvgQ:	2	7	0	0	10	10	5	0	6	0	0	0

Note: Queue reported is the number of cars per lane.

Traffix 7.8.0115 (c) 2006 Dowling Assoc. Licensed to RBF CONSULTING, IRVINE

APPENDIX E

Existing Plus Near-Term Cumulative Conditions
HCM Worksheets

cum am Fri Feb 8, 2008 12:17:17 Page 1-1

Pacifica Estates Traffic Impact Study
Existing Plus Cumulative Conditions
AM Peak Hour

Scenario Report

Scenario:	cum am
Command:	cum am
Volume:	cum am
Geometry:	existing
Impact Fee:	Default Impact Fee
Trip Generation:	none
Trip Distribution:	none
Paths:	Default Paths
Routes:	Default Routes
Configuration:	cum am

cum am Fri Feb 8, 2008 12:17:18 Page 2-1

Pacifica Estates Traffic Impact Study
Existing Plus Cumulative Conditions
AM Peak Hour

Impact Analysis Report
Level Of Service

Intersection	Base LOS	Base Del/ Veh	Base V/ C	Future LOS	Future Del/ Veh	Future V/ C	Change in
# 1 Southbound Mission Road / Air	C	19.8	0.000	C	22.0	0.000	+ 2.162 D/V
# 2 Northbound Mission Road / Air	B	12.9	0.000	B	13.6	0.000	+ 0.764 D/V
# 3 Mission Road / Sterling Bridge	A	6.3	0.392	A	6.1	0.436	-0.221 D/V
# 4 Mission Road / Stagecoach Lane	C	21.4	0.690	C	23.1	0.773	+ 1.645 D/V
# 5 Mission Road / Olive Hill Road	B	12.2	0.519	B	12.1	0.567	-0.123 D/V

cum am Fri Feb 8, 2008 12:17:19 Page 3-1

Pacifica Estates Traffic Impact Study
Existing Plus Cumulative Conditions
AM Peak Hour

Level Of Service Computation Report
2000 HCM Unsignalized Method (Future Volume Alternative)

Intersection #1 Southbound Mission Road / Air Park Road

Average Delay (sec/veh): 0.4 Worst Case Level Of Service: C[22.0]

Approach:	North Bound				South Bound				East Bound				West Bound			
Movement:	L	- T	- R		L	- T	- R		L	- T	- R		L	- T	- R	
Control:	Uncontrolled				Uncontrolled				Stop Sign				Stop Sign			
Rights:	Include				Include				Include				Include			
Lanes:	1	0	0	0	0	0	1	1	0	0	1!	0	0	0	0	0
Volume Module:																
Base Vol:	26	0	0	0	1040	1			5	0	4		0	0	0	
Growth Adj:	1.10	1.10	1.10	1.10	1.10	1.10			1.10	1.10	1.10		1.10	1.10	1.10	
Initial Bse:	29	0	0	0	1144	1			6	0	4		0	0	0	
Added Vol:	0	0	0	0	0	0			0	0	0		0	0	0	
Cumulative:	0	0	0	0	98	0			0	0	0		0	0	0	
Initial Fut:	29	0	0	0	1242	1			6	0	4		0	0	0	
User Adj:	1.00	1.00	1.00	1.00	1.00	1.00			1.00	1.00	1.00		1.00	1.00	1.00	
PHF Adj:	0.95	0.95	0.95	0.95	0.95	0.95			0.95	0.95	0.95		0.95	0.95	0.95	
PHF Volume:	30	0	0	0	1307	1			6	0	5		0	0	0	
Reduct Vol:	0	0	0	0	0	0			0	0	0		0	0	0	
Final Vol.:	30	0	0	0	1307	1			6	0	5		0	0	0	
Critical Gap Module:																
Critical Gp:	4.1	xxxx	xxxxx	xxxxx	xxxx	xxxxx			6.4	xxxx	6.2		xxxxx	xxxx	xxxxx	
FollowUpTim:	2.2	xxxx	xxxxx	xxxxx	xxxx	xxxxx			3.5	xxxx	3.3		xxxxx	xxxx	xxxxx	
Capacity Module:																
Cnflict Vol:	1309	xxxx	xxxxx	xxxx	xxxx	xxxxx			1368	xxxx	654		xxxx	xxxx	xxxxx	
Potent Cap.:	536	xxxx	xxxxx	xxxx	xxxx	xxxxx			163	xxxx	470		xxxx	xxxx	xxxxx	
Move Cap.:	536	xxxx	xxxxx	xxxx	xxxx	xxxxx			156	xxxx	470		xxxx	xxxx	xxxxx	
Volume/Cap:	0.06	xxxx	xxxx	xxxx	xxxx	xxxx			0.04	xxxx	0.01		xxxx	xxxx	xxxx	
Level Of Service Module:																
2Way95thQ:	0.2	xxxx	xxxxx	xxxx	xxxx	xxxxx			xxxx	xxxx	xxxxx		xxxx	xxxx	xxxxx	
Control Del:	12.1	xxxx	xxxxx	xxxxx	xxxx	xxxxx			xxxxx	xxxx	xxxxx		xxxxx	xxxx	xxxxx	
LOS by Move:	B	*	*	*	*	*			*	*	*		*	*	*	
Movement:	LT	- LTR	- RT	LT	- LTR	- RT			LT	- LTR	- RT		LT	- LTR	- RT	
Shared Cap.:	xxxx	xxxx	xxxxx	xxxx	xxxx	xxxxx			xxxx	222	xxxxx		xxxx	xxxx	xxxxx	
SharedQueue:	xxxxx	xxxx	xxxxx	xxxxx	xxxx	xxxxx			xxxxx	0.1	xxxxx		xxxxx	xxxx	xxxxx	
Shrd ConDel:	xxxxx	xxxx	xxxxx	xxxxx	xxxx	xxxxx			xxxxx	22.0	xxxxx		xxxxx	xxxx	xxxxx	
Shared LOS:	*	*	*	*	*	*			*	C	*		*	*	*	
ApproachDel:	xxxxxx			xxxxxx						22.0			xxxxxx			
ApproachLOS:		*			*					C				*		

Note: Queue reported is the number of cars per lane.

cum am Fri Feb 8, 2008 12:17:19 Page 4-1

Pacifica Estates Traffic Impact Study
Existing Plus Cumulative Conditions
AM Peak Hour

Level Of Service Computation Report
2000 HCM Unsignalized Method (Future Volume Alternative)

Intersection #2 Northbound Mission Road / Air Park Road

Average Delay (sec/veh): 0.3 Worst Case Level Of Service: B[13.6]

Approach:	North Bound				South Bound				East Bound				West Bound			
Movement:	L	- T	- R		L	- T	- R		L	- T	- R		L	- T	- R	
Control:	Uncontrolled				Uncontrolled				Stop Sign				Stop Sign			
Rights:	Include				Include				Include				Include			
Lanes:	1	0	2	0	0	0	0	0	1	0	0	0	0	0	0	0
Volume Module:																
Base Vol:	26	907	0		0	0	0		5	0	0		0	0	0	
Growth Adj:	1.10	1.10	1.10		1.10	1.10	1.10		1.10	1.10	1.10		1.10	1.10	1.10	
Initial Bse:	29	998	0		0	0	0		6	0	0		0	0	0	
Added Vol:	0	0	0		0	0	0		0	0	0		0	0	0	
Cumulative:	0	130	0		0	0	0		0	0	0		0	0	0	
Initial Fut:	29	1128	0		0	0	0		6	0	0		0	0	0	
User Adj:	1.00	1.00	1.00		1.00	1.00	1.00		1.00	1.00	1.00		1.00	1.00	1.00	
PHF Adj:	0.95	0.95	0.95		0.95	0.95	0.95		0.95	0.95	0.95		0.95	0.95	0.95	
PHF Volume:	30	1187	0		0	0	0		6	0	0		0	0	0	
Reduct Vol:	0	0	0		0	0	0		0	0	0		0	0	0	
Final Vol.:	30	1187	0		0	0	0		6	0	0		0	0	0	
Critical Gap Module:																
Critical Gp:	4.1	xxxx	xxxxx		xxxxx	xxxx	xxxxx		6.4	xxxx	xxxxx		xxxxx	xxxx	xxxxx	
FollowUpTim:	2.2	xxxx	xxxxx		xxxxx	xxxx	xxxxx		3.5	xxxx	xxxxx		xxxxx	xxxx	xxxxx	
Capacity Module:																
Cnflict Vol:	0	xxxx	xxxxx		xxxx	xxxx	xxxxx		654	xxxx	xxxxx		xxxx	xxxx	xxxxx	
Potent Cap.:	900	xxxx	xxxxx		xxxx	xxxx	xxxxx		435	xxxx	xxxxx		xxxx	xxxx	xxxxx	
Move Cap.:	900	xxxx	xxxxx		xxxx	xxxx	xxxxx		424	xxxx	xxxxx		xxxx	xxxx	xxxxx	
Volume/Cap:	0.03	xxxx	xxxx		xxxx	xxxx	xxxx		0.01	xxxx	xxxx		xxxx	xxxx	xxxx	
Level Of Service Module:																
2Way95thQ:	0.1	xxxx	xxxxx		xxxx	xxxx	xxxxx		0.0	xxxx	xxxxx		xxxx	xxxx	xxxxx	
Control Del:	9.1	xxxx	xxxxx		xxxxx	xxxx	xxxxx		13.6	xxxx	xxxxx		xxxxx	xxxx	xxxxx	
LOS by Move:	A	*	*		*	*	*		B	*	*		*	*	*	
Movement:	LT	- LTR	- RT		LT	- LTR	- RT		LT	- LTR	- RT		LT	- LTR	- RT	
Shared Cap.:	xxxx	xxxx	xxxxx		xxxx	xxxx	xxxxx		xxxx	xxxx	xxxxx		xxxx	xxxx	xxxxx	
SharedQueue:	xxxxx	xxxx	xxxxx		xxxxx	xxxx	xxxxx		xxxxx	xxxx	xxxxx		xxxxx	xxxx	xxxxx	
Shrd ConDel:	xxxxx	xxxx	xxxxx		xxxxx	xxxx	xxxxx		xxxxx	xxxx	xxxxx		xxxxx	xxxx	xxxxx	
Shared LOS:	*	*	*		*	*	*		*	*	*		*	*	*	
ApproachDel:	xxxxxx				xxxxxx					13.6			xxxxxx			
ApproachLOS:		*				*				B				*		

Note: Queue reported is the number of cars per lane.

cum am Fri Feb 8, 2008 12:17:19 Page 5-1

Pacifica Estates Traffic Impact Study
Existing Plus Cumulative Conditions
AM Peak Hour

Level Of Service Computation Report
2000 HCM Operations Method (Future Volume Alternative)

Intersection #3 Mission Road / Sterling Bridge Rd.

Cycle (sec): 90 Critical Vol./Cap.(X): 0.436
Loss Time (sec): 12 (Y+R=4.0 sec) Average Delay (sec/veh): 6.1
Optimal Cycle: 37 Level Of Service: A

Approach:	North Bound			South Bound			East Bound			West Bound		
Movement:	L - T - R			L - T - R			L - T - R			L - T - R		
Control:	Protected			Protected			Split Phase			Split Phase		
Rights:	Include			Include			Include			Include		
Min. Green:	0	10	10	5	10	10	0	0	0	5	0	5
Lanes:	0 0	2 0	1	1 0	2 0	0	0 0	0 0	0	1 0	0 0	1
Volume Module:												
Base Vol:	0	897	24	22	961	0	0	0	0	59	0	33
Growth Adj:	1.10	1.10	1.10	1.10	1.10	1.10	1.10	1.10	1.10	1.10	1.10	1.10
Initial Bse:	0	987	26	24	1057	0	0	0	0	65	0	36
Added Vol:	0	0	0	0	0	0	0	0	0	0	0	0
Cumulative:	0	130	0	0	98	0	0	0	0	0	0	0
Initial Fut:	0	1117	26	24	1155	0	0	0	0	65	0	36
User Adj:	1.00	1.00	1.00	1.00	1.00	1.00	1.00	1.00	1.00	1.00	1.00	1.00
PHF Adj:	0.95	0.95	0.95	0.95	0.95	0.95	0.95	0.95	0.95	0.95	0.95	0.95
PHF Volume:	0	1175	28	25	1216	0	0	0	0	68	0	38
Reduct Vol:	0	0	0	0	0	0	0	0	0	0	0	0
Reduced Vol:	0	1175	28	25	1216	0	0	0	0	68	0	38
PCE Adj:	1.00	1.00	1.00	1.00	1.00	1.00	1.00	1.00	1.00	1.00	1.00	1.00
MLF Adj:	1.00	1.00	1.00	1.00	1.00	1.00	1.00	1.00	1.00	1.00	1.00	1.00
Final Vol.:	0	1175	28	25	1216	0	0	0	0	68	0	38
Saturation Flow Module:												
Sat/Lane:	1900	1900	1900	1900	1900	1900	1900	1900	1900	1900	1900	1900
Adjustment:	1.00	0.95	0.85	0.95	0.95	1.00	1.00	1.00	1.00	0.95	1.00	0.85
Lanes:	0.00	2.00	1.00	1.00	2.00	0.00	0.00	0.00	0.00	1.00	0.00	1.00
Final Sat.:	0	3610	1615	1805	3610	0	0	0	0	1805	0	1615
Capacity Analysis Module:												
Vol/Sat:	0.00	0.33	0.02	0.01	0.34	0.00	0.00	0.00	0.00	0.04	0.00	0.02
Crit Moves:		****		****						****		
Green/Cycle:	0.00	0.73	0.73	0.06	0.78	0.00	0.00	0.00	0.00	0.08	0.00	0.08
Volume/Cap:	0.00	0.45	0.02	0.25	0.43	0.00	0.00	0.00	0.00	0.45	0.00	0.28
Delay/Veh:	0.0	5.1	3.4	42.1	3.3	0.0	0.0	0.0	0.0	41.3	0.0	39.8
User DelAdj:	1.00	1.00	1.00	1.00	1.00	1.00	1.00	1.00	1.00	1.00	1.00	1.00
AdjDel/Veh:	0.0	5.1	3.4	42.1	3.3	0.0	0.0	0.0	0.0	41.3	0.0	39.8
LOS by Move:	A	A	A	D	A	A	A	A	A	D	A	D
HCM2kAvgQ:	0	7	0	1	6	0	0	0	0	2	0	1

Note: Queue reported is the number of cars per lane.

cum am Fri Feb 8, 2008 12:17:19 Page 6-1

Pacifica Estates Traffic Impact Study
Existing Plus Cumulative Conditions
AM Peak Hour

Level Of Service Computation Report
2000 HCM Operations Method (Future Volume Alternative)

Intersection #4 Mission Road / Stagecoach Lane

Cycle (sec): 90 Critical Vol./Cap.(X): 0.773
Loss Time (sec): 12 (Y+R=4.0 sec) Average Delay (sec/veh): 23.1
Optimal Cycle: 69 Level Of Service: C

Approach:	North Bound			South Bound			East Bound			West Bound		
Movement:	L - T - R			L - T - R			L - T - R			L - T - R		
Control:	Protected			Protected			Permitted			Permitted		
Rights:	Include			Include			Include			Include		
Min. Green:	5	10	10	5	10	10	10	10	10	10	10	10
Lanes:	1 0	1 1	0	2 0	1 1	0	0 0	1! 0	0	1 0	0 1	0
Volume Module:												
Base Vol:	0	675	310	304	708	0	0	0	0	209	0	201
Growth Adj:	1.10	1.10	1.10	1.10	1.10	1.10	1.10	1.10	1.10	1.10	1.10	1.10
Initial Bse:	0	743	341	334	779	0	0	0	0	230	0	221
Added Vol:	0	0	0	0	0	0	0	0	0	0	0	0
Cumulative:	0	127	23	5	93	0	0	0	0	36	0	3
Initial Fut:	0	870	364	339	872	0	0	0	0	266	0	224
User Adj:	1.00	1.00	1.00	1.00	1.00	1.00	1.00	1.00	1.00	1.00	1.00	1.00
PHF Adj:	0.95	0.95	0.95	0.95	0.95	0.95	0.95	0.95	0.95	0.95	0.95	0.95
PHF Volume:	0	915	383	357	918	0	0	0	0	280	0	236
Reduct Vol:	0	0	0	0	0	0	0	0	0	0	0	0
Reduced Vol:	0	915	383	357	918	0	0	0	0	280	0	236
PCE Adj:	1.00	1.00	1.00	1.00	1.00	1.00	1.00	1.00	1.00	1.00	1.00	1.00
MLF Adj:	1.00	1.00	1.00	1.00	1.00	1.00	1.00	1.00	1.00	1.00	1.00	1.00
Final Vol.:	0	915	383	357	918	0	0	0	0	280	0	236
Saturation Flow Module:												
Sat/Lane:	1900	1900	1900	1900	1900	1900	1900	1900	1900	1900	1900	1900
Adjustment:	1.00	0.91	0.91	0.92	0.95	0.95	1.00	1.00	1.00	0.77	1.00	0.85
Lanes:	1.00	1.41	0.59	2.00	2.00	0.00	0.00	1.00	0.00	1.00	0.00	1.00
Final Sat.:	1900	2433	1018	3502	3610	0	0	1900	0	1461	0	1615
Capacity Analysis Module:												
Vol/Sat:	0.00	0.38	0.38	0.10	0.25	0.00	0.00	0.00	0.00	0.19	0.00	0.15
Crit Moves:		****		****						****		
Green/Cycle:	0.00	0.49	0.49	0.13	0.62	0.00	0.00	0.00	0.00	0.25	0.00	0.25
Volume/Cap:	0.00	0.77	0.77	0.77	0.41	0.00	0.00	0.00	0.00	0.77	0.00	0.59
Delay/Veh:	0.0	21.3	21.3	45.7	8.9	0.0	0.0	0.0	0.0	41.4	0.0	32.1
User DelAdj:	1.00	1.00	1.00	1.00	1.00	1.00	1.00	1.00	1.00	1.00	1.00	1.00
AdjDel/Veh:	0.0	21.3	21.3	45.7	8.9	0.0	0.0	0.0	0.0	41.4	0.0	32.1
LOS by Move:	A	C	C	D	A	A	A	A	A	D	A	C
HCM2kAvgQ:	0	17	17	7	7	0	0	0	0	9	0	7

Note: Queue reported is the number of cars per lane.

cum am Fri Feb 8, 2008 12:17:19 Page 7-1

Pacifica Estates Traffic Impact Study
Existing Plus Cumulative Conditions
AM Peak Hour

Level Of Service Computation Report
2000 HCM Operations Method (Future Volume Alternative)

Intersection #5 Mission Road / Olive Hill Road

Cycle (sec): 90 Critical Vol./Cap.(X): 0.567
Loss Time (sec): 12 (Y+R=4.0 sec) Average Delay (sec/veh): 12.1
Optimal Cycle: 45 Level Of Service: B

Approach:	North Bound				South Bound				East Bound				West Bound			
Movement:	L	-	T	- R	L	-	T	- R	L	-	T	- R	L	-	T	- R
Control:	Protected				Protected				Split Phase				Split Phase			
Rights:	Include				Include				Include				Include			
Min. Green:	5		10	0	0		10	10	5		0	5	0		0	0
Lanes:	1	0	2	0 0	0	0	1	1 0	1	0	1!	0 0	0	0	0	0 0
Volume Module:																
Base Vol:	39		799	0	0		778	195	213		0	51	0		0	0
Growth Adj:	1.10		1.10	1.10	1.10		1.10	1.10	1.10		1.10	1.10	1.10		1.10	1.10
Initial Bse:	43		879	0	0		856	215	234		0	56	0		0	0
Added Vol:	0		0	0	0		0	0	0		0	0	0		0	0
Cumulative:	0		137	0	0		116	13	13		0	0	0		0	0
Initial Fut:	43		1016	0	0		972	228	247		0	56	0		0	0
User Adj:	1.00		1.00	1.00	1.00		1.00	1.00	1.00		1.00	1.00	1.00		1.00	1.00
PHF Adj:	0.95		0.95	0.95	0.95		0.95	0.95	0.95		0.95	0.95	0.95		0.95	0.95
PHF Volume:	45		1069	0	0		1023	239	260		0	59	0		0	0
Reduct Vol:	0		0	0	0		0	0	0		0	0	0		0	0
Reduced Vol:	45		1069	0	0		1023	239	260		0	59	0		0	0
PCE Adj:	1.00		1.00	1.00	1.00		1.00	1.00	1.00		1.00	1.00	1.00		1.00	1.00
MLF Adj:	1.00		1.00	1.00	1.00		1.00	1.00	1.00		1.00	1.00	1.00		1.00	1.00
Final Vol.:	45		1069	0	0		1023	239	260		0	59	0		0	0
Saturation Flow Module:																
Sat/Lane:	1900		1900	1900	1900		1900	1900	1900		1900	1900	1900		1900	1900
Adjustment:	0.95		0.95	1.00	1.00		0.92	0.92	0.93		1.00	0.93	1.00		1.00	1.00
Lanes:	1.00		2.00	0.00	0.00		1.62	0.38	1.69		0.00	0.31	0.00		0.00	0.00
Final Sat.:	1805		3610	0	0		2843	666	2996		0	554	0		0	0
Capacity Analysis Module:																
Vol/Sat:	0.03		0.30	0.00	0.00		0.36	0.36	0.09		0.00	0.11	0.00		0.00	0.00
Crit Moves:	****						****					****				
Green/Cycle:	0.06		0.68	0.00	0.00		0.63	0.63	0.19		0.00	0.19	0.00		0.00	0.00
Volume/Cap:	0.45		0.43	0.00	0.00		0.57	0.57	0.47		0.00	0.57	0.00		0.00	0.00
Delay/Veh:	44.4		6.6	0.0	0.0		10.2	10.2	33.2		0.0	34.9	0.0		0.0	0.0
User DelAdj:	1.00		1.00	1.00	1.00		1.00	1.00	1.00		1.00	1.00	1.00		1.00	1.00
AdjDel/Veh:	44.4		6.6	0.0	0.0		10.2	10.2	33.2		0.0	34.9	0.0		0.0	0.0
LOS by Move:	D		A	A	A		B	B	C		A	C	A		A	A
HCM2kAvgQ:	2		7	0	0		11	11	4		0	6	0		0	0

Note: Queue reported is the number of cars per lane.

Traffix 7.8.0115 (c) 2006 Dowling Assoc. Licensed to RBF CONSULTING, IRVINE

cum pm Fri Feb 8, 2008 12:17:33 Page 1-1

Pacifica Estates Traffic Impact Study
Existing Plus Cumulative Conditions
PM Peak Hour

Scenario Report

Scenario:	cum pm
Command:	cum pm
Volume:	cum pm
Geometry:	existing
Impact Fee:	Default Impact Fee
Trip Generation:	none
Trip Distribution:	none
Paths:	Default Paths
Routes:	Default Routes
Configuration:	cum pm

cum pm Fri Feb 8, 2008 12:17:34 Page 2-1

Pacifica Estates Traffic Impact Study
Existing Plus Cumulative Conditions
PM Peak Hour

Impact Analysis Report
Level Of Service

Intersection	Base LOS	Base Del/ Veh	Base V/ C	Future LOS	Future Del/ Veh	Future V/ C	Change in
# 1 Southbound Mission Road / Air	C	17.9	0.000	C	21.4	0.000	+ 3.418 D/V
# 2 Northbound Mission Road / Air	B	14.5	0.000	C	15.5	0.000	+ 0.986 D/V
# 3 Mission Road / Sterling Bridge	A	5.8	0.481	A	5.7	0.526	-0.015 D/V
# 4 Mission Road / Stagecoach Lane	C	21.1	0.768	C	23.7	0.853	+ 2.613 D/V
# 5 Mission Road / Olive Hill Road	B	15.4	0.610	B	15.5	0.683	+ 0.029 D/V

cum pm Fri Feb 8, 2008 12:17:34 Page 3-1

Pacifica Estates Traffic Impact Study
Existing Plus Cumulative Conditions
PM Peak Hour

Level Of Service Computation Report
2000 HCM Unsignalized Method (Future Volume Alternative)

Intersection #1 Southbound Mission Road / Air Park Road

Average Delay (sec/veh): 0.6 Worst Case Level Of Service: C[21.4]

Approach:	North Bound				South Bound				East Bound				West Bound			
Movement:	L	- T	- R		L	- T	- R		L	- T	- R		L	- T	- R	
Control:	Uncontrolled				Uncontrolled				Stop Sign				Stop Sign			
Rights:	Include				Include				Include				Include			
Lanes:	1	0	0	0 0	0	0	1	1 0	0	0	1!	0 0	0	0	0	0 0
Volume Module:																
Base Vol:	16	0	0	0	1051	4	9	0	15	0	0	0				
Growth Adj:	1.10	1.10	1.10	1.10	1.10	1.10	1.10	1.10	1.10	1.10	1.10	1.10				
Initial Bse:	18	0	0	0	1156	4	10	0	17	0	0	0				
Added Vol:	0	0	0	0	0	0	0	0	0	0	0	0				
Cumulative:	0	0	0	0	176	0	0	0	0	0	0	0				
Initial Fut:	18	0	0	0	1332	4	10	0	17	0	0	0				
User Adj:	1.00	1.00	1.00	1.00	1.00	1.00	1.00	1.00	1.00	1.00	1.00	1.00				
PHF Adj:	0.95	0.95	0.95	0.95	0.95	0.95	0.95	0.95	0.95	0.95	0.95	0.95				
PHF Volume:	19	0	0	0	1402	5	10	0	17	0	0	0				
Reduct Vol:	0	0	0	0	0	0	0	0	0	0	0	0				
Final Vol.:	19	0	0	0	1402	5	10	0	17	0	0	0				
Critical Gap Module:																
Critical Gp:	4.1	xxxx	xxxxx	xxxxx	xxxx	xxxxx	6.4	xxxx	6.2	xxxxx	xxxx	xxxxx				
FollowUpTim:	2.2	xxxx	xxxxx	xxxxx	xxxx	xxxxx	3.5	xxxx	3.3	xxxxx	xxxx	xxxxx				
Capacity Module:																
Cnflict Vol:	1407	xxxx	xxxxx	xxxx	xxxx	xxxxx	1442	xxxx	703	xxxx	xxxx	xxxxx				
Potent Cap.:	491	xxxx	xxxxx	xxxx	xxxx	xxxxx	147	xxxx	441	xxxx	xxxx	xxxxx				
Move Cap.:	491	xxxx	xxxxx	xxxx	xxxx	xxxxx	143	xxxx	441	xxxx	xxxx	xxxxx				
Volume/Cap:	0.04	xxxx	xxxx	xxxx	xxxx	xxxx	0.07	xxxx	0.04	xxxx	xxxx	xxxx				
Level Of Service Module:																
2Way95thQ:	0.1	xxxx	xxxxx	xxxx	xxxx	xxxxx	xxxx	xxxx	xxxxx	xxxx	xxxx	xxxxx				
Control Del:	12.6	xxxx	xxxxx	xxxxx	xxxx	xxxxx	xxxxx	xxxx	xxxxx	xxxxx	xxxx	xxxxx				
LOS by Move:	B	*	*	*	*	*	*	*	*	*	*	*				
Movement:	LT	- LTR	- RT	LT	- LTR	- RT	LT	- LTR	- RT	LT	- LTR	- RT				
Shared Cap.:	xxxx	xxxx	xxxxx	xxxx	xxxx	xxxxx	xxxx	248	xxxxx	xxxx	xxxx	xxxxx				
SharedQueue:	xxxxx	xxxx	xxxxx	xxxxx	xxxx	xxxxx	xxxxx	0.4	xxxxx	xxxxx	xxxx	xxxxx				
Shrd ConDel:	xxxxx	xxxx	xxxxx	xxxxx	xxxx	xxxxx	xxxxx	21.4	xxxxx	xxxxx	xxxx	xxxxx				
Shared LOS:	*	*	*	*	*	*	*	C	*	*	*	*				
ApproachDel:	xxxxxx			xxxxxx				21.4		xxxxxx						
ApproachLOS:	*			*				C		*						

Note: Queue reported is the number of cars per lane.

cum pm Fri Feb 8, 2008 12:17:34 Page 4-1

Pacifica Estates Traffic Impact Study
Existing Plus Cumulative Conditions
PM Peak Hour

Level Of Service Computation Report
2000 HCM Unsignalized Method (Future Volume Alternative)

Intersection #2 Northbound Mission Road / Air Park Road

Average Delay (sec/veh): 0.2 Worst Case Level Of Service: C[15.5]

Approach:	North Bound				South Bound				East Bound				West Bound			
Movement:	L	- T	- R		L	- T	- R		L	- T	- R		L	- T	- R	
Control:	Uncontrolled				Uncontrolled				Stop Sign				Stop Sign			
Rights:	Include				Include				Include				Include			
Lanes:	1	0	2	0 0	0	0	0	0 0	1	0	0	0 0	0	0	0	0 0
Volume Module:																
Base Vol:	16	1186	0	0	0	0	9	0	0	0	0	0				
Growth Adj:	1.10	1.10	1.10	1.10	1.10	1.10	1.10	1.10	1.10	1.10	1.10	1.10				
Initial Bse:	18	1305	0	0	0	0	10	0	0	0	0	0				
Added Vol:	0	0	0	0	0	0	0	0	0	0	0	0				
Cumulative:	0	135	0	0	0	0	0	0	0	0	0	0				
Initial Fut:	18	1440	0	0	0	0	10	0	0	0	0	0				
User Adj:	1.00	1.00	1.00	1.00	1.00	1.00	1.00	1.00	1.00	1.00	1.00	1.00				
PHF Adj:	0.95	0.95	0.95	0.95	0.95	0.95	0.95	0.95	0.95	0.95	0.95	0.95				
PHF Volume:	19	1515	0	0	0	0	10	0	0	0	0	0				
Reduct Vol:	0	0	0	0	0	0	0	0	0	0	0	0				
Final Vol.:	19	1515	0	0	0	0	10	0	0	0	0	0				
Critical Gap Module:																
Critical Gp:	4.1	xxxx	xxxxx	xxxxx	xxxx	xxxxx	6.4	xxxx	xxxxx	xxxxx	xxxx	xxxxx				
FollowUpTim:	2.2	xxxx	xxxxx	xxxxx	xxxx	xxxxx	3.5	xxxx	xxxxx	xxxxx	xxxx	xxxxx				
Capacity Module:																
Cnflict Vol:	0	xxxx	xxxxx	xxxx	xxxx	xxxxx	795	xxxx	xxxxx	xxxx	xxxx	xxxxx				
Potent Cap.:	900	xxxx	xxxxx	xxxx	xxxx	xxxxx	359	xxxx	xxxxx	xxxx	xxxx	xxxxx				
Move Cap.:	900	xxxx	xxxxx	xxxx	xxxx	xxxxx	354	xxxx	xxxxx	xxxx	xxxx	xxxxx				
Volume/Cap:	0.02	xxxx	xxxx	xxxx	xxxx	xxxx	0.03	xxxx	xxxx	xxxx	xxxx	xxxx				
Level Of Service Module:																
2Way95thQ:	0.1	xxxx	xxxxx	xxxx	xxxx	xxxxx	0.1	xxxx	xxxxx	xxxx	xxxx	xxxxx				
Control Del:	9.1	xxxx	xxxxx	xxxxx	xxxx	xxxxx	15.5	xxxx	xxxxx	xxxxx	xxxx	xxxxx				
LOS by Move:	A	*	*	*	*	*	C	*	*	*	*	*				
Movement:	LT	- LTR	- RT	LT	- LTR	- RT	LT	- LTR	- RT	LT	- LTR	- RT				
Shared Cap.:	xxxx	xxxx	xxxxx	xxxx	xxxx	xxxxx	xxxx	xxxx	xxxxx	xxxx	xxxx	xxxxx				
SharedQueue:	xxxxx	xxxx	xxxxx	xxxxx	xxxx	xxxxx	xxxxx	xxxx	xxxxx	xxxxx	xxxx	xxxxx				
Shrd ConDel:	xxxxx	xxxx	xxxxx	xxxxx	xxxx	xxxxx	xxxxx	xxxx	xxxxx	xxxxx	xxxx	xxxxx				
Shared LOS:	*	*	*	*	*	*	*	*	*	*	*	*				
ApproachDel:	xxxxxx			xxxxxx				15.5		xxxxxx						
ApproachLOS:	*			*				C		*						

Note: Queue reported is the number of cars per lane.

cum pm Fri Feb 8, 2008 12:17:34 Page 5-1

Pacifica Estates Traffic Impact Study
Existing Plus Cumulative Conditions
PM Peak Hour

Level Of Service Computation Report
2000 HCM Operations Method (Future Volume Alternative)

Intersection #3 Mission Road / Sterling Bridge Rd.

Cycle (sec): 90 Critical Vol./Cap.(X): 0.526
Loss Time (sec): 12 (Y+R=4.0 sec) Average Delay (sec/veh): 5.7
Optimal Cycle: 42 Level Of Service: A

Approach:	North Bound			South Bound			East Bound			West Bound		
Movement:	L	T	R	L	T	R	L	T	R	L	T	R
Control:	Protected			Protected			Split Phase			Split Phase		
Rights:	Include			Include			Include			Include		
Min. Green:	0	10	10	5	10	10	0	0	0	5	0	5
Lanes:	0 0	2 0	1	1 0	2 0	0	0 0	0 0	0	1 0	0 0	1
Volume Module:												
Base Vol:	0	1137	57	58	980	0	0	0	0	23	0	31
Growth Adj:	1.10	1.10	1.10	1.10	1.10	1.10	1.10	1.10	1.10	1.10	1.10	1.10
Initial Bse:	0	1251	63	64	1078	0	0	0	0	25	0	34
Added Vol:	0	0	0	0	0	0	0	0	0	0	0	0
Cumulative:	0	135	0	0	176	0	0	0	0	0	0	0
Initial Fut:	0	1386	63	64	1254	0	0	0	0	25	0	34
User Adj:	1.00	1.00	1.00	1.00	1.00	1.00	1.00	1.00	1.00	1.00	1.00	1.00
PHF Adj:	0.95	0.95	0.95	0.95	0.95	0.95	0.95	0.95	0.95	0.95	0.95	0.95
PHF Volume:	0	1459	66	67	1320	0	0	0	0	27	0	36
Reduct Vol:	0	0	0	0	0	0	0	0	0	0	0	0
Reduced Vol:	0	1459	66	67	1320	0	0	0	0	27	0	36
PCE Adj:	1.00	1.00	1.00	1.00	1.00	1.00	1.00	1.00	1.00	1.00	1.00	1.00
MLF Adj:	1.00	1.00	1.00	1.00	1.00	1.00	1.00	1.00	1.00	1.00	1.00	1.00
Final Vol.:	0	1459	66	67	1320	0	0	0	0	27	0	36
Saturation Flow Module:												
Sat/Lane:	1900	1900	1900	1900	1900	1900	1900	1900	1900	1900	1900	1900
Adjustment:	1.00	0.95	0.85	0.95	0.95	1.00	1.00	1.00	1.00	0.95	1.00	0.85
Lanes:	0.00	2.00	1.00	1.00	2.00	0.00	0.00	0.00	0.00	1.00	0.00	1.00
Final Sat.:	0	3610	1615	1805	3610	0	0	0	0	1805	0	1615
Capacity Analysis Module:												
Vol/Sat:	0.00	0.40	0.04	0.04	0.37	0.00	0.00	0.00	0.00	0.01	0.00	0.02
Crit Moves:		****		****						****		
Green/Cycle:	0.00	0.74	0.74	0.07	0.81	0.00	0.00	0.00	0.00	0.06	0.00	0.06
Volume/Cap:	0.00	0.54	0.06	0.54	0.45	0.00	0.00	0.00	0.00	0.27	0.00	0.40
Delay/Veh:	0.0	5.2	3.1	45.5	2.6	0.0	0.0	0.0	0.0	42.2	0.0	44.0
User DelAdj:	1.00	1.00	1.00	1.00	1.00	1.00	1.00	1.00	1.00	1.00	1.00	1.00
AdjDel/Veh:	0.0	5.2	3.1	45.5	2.6	0.0	0.0	0.0	0.0	42.2	0.0	44.0
LOS by Move:	A	A	A	D	A	A	A	A	A	D	A	D
HCM2kAvgQ:	0	9	1	3	6	0	0	0	0	1	0	1

Note: Queue reported is the number of cars per lane.

cum pm Fri Feb 8, 2008 12:17:34 Page 6-1

Pacifica Estates Traffic Impact Study
Existing Plus Cumulative Conditions
PM Peak Hour

Level Of Service Computation Report
2000 HCM Operations Method (Future Volume Alternative)

Intersection #4 Mission Road / Stagecoach Lane

Cycle (sec): 90 Critical Vol./Cap.(X): 0.853
Loss Time (sec): 12 (Y+R=4.0 sec) Average Delay (sec/veh): 23.7
Optimal Cycle: 88 Level Of Service: C

Approach:	North Bound			South Bound			East Bound			West Bound		
Movement:	L	T	R	L	T	R	L	T	R	L	T	R
Control:	Protected			Protected			Permitted			Permitted		
Rights:	Include			Include			Include			Include		
Min. Green:	5	10	10	5	10	10	10	10	10	10	10	10
Lanes:	1 0	1 1	0	2 0	1 1	0	0 0	1! 0	0	1 0	0 1	0
Volume Module:												
Base Vol:	0	1005	242	211	807	0	0	0	0	232	0	201
Growth Adj:	1.10	1.10	1.10	1.10	1.10	1.10	1.10	1.10	1.10	1.10	1.10	1.10
Initial Bse:	0	1106	266	232	888	0	0	0	0	255	0	221
Added Vol:	0	0	0	0	0	0	0	0	0	0	0	0
Cumulative:	0	129	44	5	171	0	0	0	0	28	0	6
Initial Fut:	0	1235	310	237	1059	0	0	0	0	283	0	227
User Adj:	1.00	1.00	1.00	1.00	1.00	1.00	1.00	1.00	1.00	1.00	1.00	1.00
PHF Adj:	0.95	0.95	0.95	0.95	0.95	0.95	0.95	0.95	0.95	0.95	0.95	0.95
PHF Volume:	0	1299	327	250	1114	0	0	0	0	298	0	239
Reduct Vol:	0	0	0	0	0	0	0	0	0	0	0	0
Reduced Vol:	0	1299	327	250	1114	0	0	0	0	298	0	239
PCE Adj:	1.00	1.00	1.00	1.00	1.00	1.00	1.00	1.00	1.00	1.00	1.00	1.00
MLF Adj:	1.00	1.00	1.00	1.00	1.00	1.00	1.00	1.00	1.00	1.00	1.00	1.00
Final Vol.:	0	1299	327	250	1114	0	0	0	0	298	0	239
Saturation Flow Module:												
Sat/Lane:	1900	1900	1900	1900	1900	1900	1900	1900	1900	1900	1900	1900
Adjustment:	1.00	0.92	0.92	0.92	0.95	0.95	1.00	1.00	1.00	0.77	1.00	0.85
Lanes:	1.00	1.60	0.40	2.00	2.00	0.00	0.00	1.00	0.00	1.00	0.00	1.00
Final Sat.:	1900	2799	703	3502	3610	0	0	1900	0	1461	0	1615
Capacity Analysis Module:												
Vol/Sat:	0.00	0.46	0.46	0.07	0.31	0.00	0.00	0.00	0.00	0.20	0.00	0.15
Crit Moves:		****		****						****		
Green/Cycle:	0.00	0.54	0.54	0.08	0.63	0.00	0.00	0.00	0.00	0.24	0.00	0.24
Volume/Cap:	0.00	0.85	0.85	0.85	0.49	0.00	0.00	0.00	0.00	0.85	0.00	0.62
Delay/Veh:	0.0	21.4	21.4	61.5	9.2	0.0	0.0	0.0	0.0	50.8	0.0	33.6
User DelAdj:	1.00	1.00	1.00	1.00	1.00	1.00	1.00	1.00	1.00	1.00	1.00	1.00
AdjDel/Veh:	0.0	21.4	21.4	61.5	9.2	0.0	0.0	0.0	0.0	50.8	0.0	33.6
LOS by Move:	A	C	C	E	A	A	A	A	A	D	A	C
HCM2kAvgQ:	0	23	23	6	9	0	0	0	0	11	0	7

Note: Queue reported is the number of cars per lane.

cum pm Fri Feb 8, 2008 12:17:35 Page 7-1

Pacifica Estates Traffic Impact Study
Existing Plus Cumulative Conditions
PM Peak Hour

Level Of Service Computation Report
2000 HCM Operations Method (Future Volume Alternative)

Intersection #5 Mission Road / Olive Hill Road

Cycle (sec): 90 Critical Vol./Cap.(X): 0.683
Loss Time (sec): 12 (Y+R=4.0 sec) Average Delay (sec/veh): 15.5
Optimal Cycle: 56 Level Of Service: B

Approach:	North Bound				South Bound				East Bound				West Bound			
Movement:	L	T	R		L	T	R		L	T	R		L	T	R	
Control:	Protected				Protected				Split Phase				Split Phase			
Rights:	Include				Include				Include				Include			
Min. Green:	5	10	0		0	10	10		5	0	5		0	0	0	
Lanes:	1 0	2 0	0		0 0	1 1	0		1 0	1! 0	0		0 0	0 0	0	
Volume Module:																
Base Vol:	52	866	0		0	800	250		361	0	45		0	0	0	
Growth Adj:	1.10	1.10	1.10		1.10	1.10	1.10		1.10	1.10	1.10		1.10	1.10	1.10	
Initial Bse:	57	953	0		0	880	275		397	0	50		0	0	0	
Added Vol:	0	0	0		0	0	0		0	0	0		0	0	0	
Cumulative:	0	157	0		0	183	16		16	0	0		0	0	0	
Initial Fut:	57	1110	0		0	1063	291		413	0	50		0	0	0	
User Adj:	1.00	1.00	1.00		1.00	1.00	1.00		1.00	1.00	1.00		1.00	1.00	1.00	
PHF Adj:	0.95	0.95	0.95		0.95	0.95	0.95		0.95	0.95	0.95		0.95	0.95	0.95	
PHF Volume:	60	1168	0		0	1119	306		435	0	52		0	0	0	
Reduct Vol:	0	0	0		0	0	0		0	0	0		0	0	0	
Reduced Vol:	60	1168	0		0	1119	306		435	0	52		0	0	0	
PCE Adj:	1.00	1.00	1.00		1.00	1.00	1.00		1.00	1.00	1.00		1.00	1.00	1.00	
MLF Adj:	1.00	1.00	1.00		1.00	1.00	1.00		1.00	1.00	1.00		1.00	1.00	1.00	
Final Vol.:	60	1168	0		0	1119	306		435	0	52		0	0	0	
Saturation Flow Module:																
Sat/Lane:	1900	1900	1900		1900	1900	1900		1900	1900	1900		1900	1900	1900	
Adjustment:	0.95	0.95	1.00		1.00	0.92	0.92		0.94	1.00	0.94		1.00	1.00	1.00	
Lanes:	1.00	2.00	0.00		0.00	1.57	0.43		1.81	0.00	0.19		0.00	0.00	0.00	
Final Sat.:	1805	3610	0		0	2743	751		3233	0	346		0	0	0	
Capacity Analysis Module:																
Vol/Sat:	0.03	0.32	0.00		0.00	0.41	0.41		0.13	0.00	0.15		0.00	0.00	0.00	
Crit Moves:	****					****					****					
Green/Cycle:	0.06	0.65	0.00		0.00	0.59	0.59		0.22	0.00	0.22		0.00	0.00	0.00	
Volume/Cap:	0.60	0.50	0.00		0.00	0.69	0.69		0.61	0.00	0.69		0.00	0.00	0.00	
Delay/Veh:	51.3	8.4	0.0		0.0	13.6	13.6		33.2	0.0	35.2		0.0	0.0	0.0	
User DelAdj:	1.00	1.00	1.00		1.00	1.00	1.00		1.00	1.00	1.00		1.00	1.00	1.00	
AdjDel/Veh:	51.3	8.4	0.0		0.0	13.6	13.6		33.2	0.0	35.2		0.0	0.0	0.0	
LOS by Move:	D	A	A		A	B	B		C	A	D		A	A	A	
HCM2kAvgQ:	3	9	0		0	15	15		7	0	8		0	0	0	

Note: Queue reported is the number of cars per lane.

Traffix 7.8.0115 (c) 2006 Dowling Assoc. Licensed to RBF CONSULTING, IRVINE

APPENDIX F

Existing Plus Near-Term Cumulative Plus Project Conditions
HCM Worksheets

cum+proj am Fri Feb 8, 2008 12:17:50 Page 1-1

Pacifica Estates Traffic Impact Study
Existing Plus Cumulative Plus Project Conditions
AM Peak Hour

Scenario Report

Scenario:	cum+proj am
Command:	cum+proj am
Volume:	cum+proj am
Geometry:	existing
Impact Fee:	Default Impact Fee
Trip Generation:	am
Trip Distribution:	project
Paths:	Default Paths
Routes:	Default Routes
Configuration:	cum+proj am

cum+proj am Fri Feb 8, 2008 12:17:52 Page 2-1

Pacifica Estates Traffic Impact Study
Existing Plus Cumulative Plus Project Conditions
AM Peak Hour

Impact Analysis Report
Level Of Service

Intersection	Base LOS	Base Del/ Veh	Base V/ C	Future LOS	Future Del/ Veh	Future V/ C	Change in
# 1 Southbound Mission Road / Air	C	19.8	0.000	C	22.5	0.000	+ 2.665 D/V
# 2 Northbound Mission Road / Air	B	12.9	0.000	B	13.9	0.000	+ 1.029 D/V
# 3 Mission Road / Sterling Bridge	A	6.3	0.392	A	6.1	0.440	-0.237 D/V
# 4 Mission Road / Stagecoach Lane	C	21.4	0.690	C	23.1	0.775	+ 1.707 D/V
# 5 Mission Road / Olive Hill Road	B	12.2	0.519	B	12.1	0.569	-0.134 D/V
# 6 Mission Road / Project Access	A	0.0	0.000	B	13.3	0.000	+13.303 D/V

cum+proj am Fri Feb 8, 2008 12:17:52 Page 3-1

Pacifica Estates Traffic Impact Study
Existing Plus Cumulative Plus Project Conditions
AM Peak Hour

Level Of Service Computation Report
2000 HCM Unsignalized Method (Future Volume Alternative)

Intersection #1 Southbound Mission Road / Air Park Road

Average Delay (sec/veh): 0.5 Worst Case Level Of Service: C[22.5]

Approach:	North Bound				South Bound				East Bound				West Bound			
Movement:	L	T	R		L	T	R		L	T	R		L	T	R	
Control:	Uncontrolled				Uncontrolled				Stop Sign				Stop Sign			
Rights:	Include				Include				Include				Include			
Lanes:	1	0	0	0	0	0	1	1	0	0	0	1!	0	0	0	0
Volume Module:																
Base Vol:	26	0	0	0	1040		1		5	0	4		0	0	0	
Growth Adj:	1.10	1.10	1.10	1.10	1.10		1.10		1.10	1.10	1.10		1.10	1.10	1.10	
Initial Bse:	29	0	0	0	1144		1		6	0	4		0	0	0	
Added Vol:	0	0	0	0	2		0		0	0	0		0	0	0	
Cum/U-Turns:	7	0	0	0	98		0		0	0	0		0	0	0	
Initial Fut:	36	0	0	0	1244		1		6	0	4		0	0	0	
User Adj:	1.00	1.00	1.00	1.00	1.00		1.00		1.00	1.00	1.00		1.00	1.00	1.00	
PHF Adj:	0.95	0.95	0.95	0.95	0.95		0.95		0.95	0.95	0.95		0.95	0.95	0.95	
PHF Volume:	37	0	0	0	1309		1		6	0	5		0	0	0	
Reduct Vol:	0	0	0	0	0		0		0	0	0		0	0	0	
Final Vol.:	37	0	0	0	1309		1		6	0	5		0	0	0	
Critical Gap Module:																
Critical Gp:	4.1	xxxx	xxxxx	xxxxx	xxxx	xxxxx			6.4	xxxx	6.2		xxxxx	xxxx	xxxxx	
FollowUpTim:	2.2	xxxx	xxxxx	xxxxx	xxxx	xxxxx			3.5	xxxx	3.3		xxxxx	xxxx	xxxxx	
Capacity Module:																
Cnflict Vol:	1311	xxxx	xxxxx	xxxx	xxxx	xxxxx			1385	xxxx	655		xxxx	xxxx	xxxxx	
Potent Cap.:	535	xxxx	xxxxx	xxxx	xxxx	xxxxx			160	xxxx	469		xxxx	xxxx	xxxxx	
Move Cap.:	535	xxxx	xxxxx	xxxx	xxxx	xxxxx			151	xxxx	469		xxxx	xxxx	xxxxx	
Volume/Cap:	0.07	xxxx	xxxx	xxxx	xxxx	xxxx			0.04	xxxx	0.01		xxxx	xxxx	xxxx	
Level Of Service Module:																
2Way95thQ:	0.2	xxxx	xxxxx	xxxx	xxxx	xxxxx			xxxx	xxxx	xxxxx		xxxx	xxxx	xxxxx	
Control Del:	12.2	xxxx	xxxxx	xxxxx	xxxx	xxxxx			xxxxx	xxxx	xxxxx		xxxxx	xxxx	xxxxx	
LOS by Move:	B	*	*	*	*	*			*	*	*		*	*	*	
Movement:	LT	LTR	RT	LT	LTR	RT			LT	LTR	RT		LT	LTR	RT	
Shared Cap.:	xxxx	xxxx	xxxxx	xxxx	xxxx	xxxxx			xxxx	216	xxxxx		xxxx	xxxx	xxxxx	
SharedQueue:	xxxxx	xxxx	xxxxx	xxxxx	xxxx	xxxxx			xxxxx	0.2	xxxxx		xxxxx	xxxx	xxxxx	
Shrd ConDel:	xxxxx	xxxx	xxxxx	xxxxx	xxxx	xxxxx			xxxxx	22.5	xxxxx		xxxxx	xxxx	xxxxx	
Shared LOS:	*	*	*	*	*	*			*	C	*		*	*	*	
ApproachDel:	xxxxxx			xxxxxx						22.5			xxxxxx			
ApproachLOS:	*			*						C			*			

Note: Queue reported is the number of cars per lane.

cum+proj am Fri Feb 8, 2008 12:17:53 Page 4-1

Pacifica Estates Traffic Impact Study
Existing Plus Cumulative Plus Project Conditions
AM Peak Hour

Level Of Service Computation Report
2000 HCM Unsignalized Method (Future Volume Alternative)

Intersection #2 Northbound Mission Road / Air Park Road

Average Delay (sec/veh): 0.3 Worst Case Level Of Service: B[13.9]

Approach:	North Bound				South Bound				East Bound				West Bound			
Movement:	L	T	R		L	T	R		L	T	R		L	T	R	
Control:	Uncontrolled				Uncontrolled				Stop Sign				Stop Sign			
Rights:	Include				Include				Include				Include			
Lanes:	1	0	2	0	0	0	0	0	1	0	0	0	0	0	0	0
Volume Module:																
Base Vol:	26	907	0		0	0	0		5	0	0		0	0	0	
Growth Adj:	1.10	1.10	1.10		1.10	1.10	1.10		1.10	1.10	1.10		1.10	1.10	1.10	
Initial Bse:	29	998	0		0	0	0		6	0	0		0	0	0	
Added Vol:	0	5	0		0	0	0		0	0	0		0	0	0	
Cumulative:	7	130	0		0	0	0		0	0	0		0	0	0	
Initial Fut:	36	1133	0		0	0	0		6	0	0		0	0	0	
User Adj:	1.00	1.00	1.00		1.00	1.00	1.00		1.00	1.00	1.00		1.00	1.00	1.00	
PHF Adj:	0.95	0.95	0.95		0.95	0.95	0.95		0.95	0.95	0.95		0.95	0.95	0.95	
PHF Volume:	37	1192	0		0	0	0		6	0	0		0	0	0	
Reduct Vol:	0	0	0		0	0	0		0	0	0		0	0	0	
Final Vol.:	37	1192	0		0	0	0		6	0	0		0	0	0	
Critical Gap Module:																
Critical Gp:	4.1	xxxx	xxxxx	xxxxx	xxxx	xxxxx			6.4	xxxx	xxxxx	xxxxx	xxxx	xxxxx		
FollowUpTim:	2.2	xxxx	xxxxx	xxxxx	xxxx	xxxxx			3.5	xxxx	xxxxx	xxxxx	xxxx	xxxxx		
Capacity Module:																
Cnflict Vol:	0	xxxx	xxxxx	xxxx	xxxx	xxxxx			671	xxxx	xxxxx	xxxx	xxxx	xxxxx		
Potent Cap.:	900	xxxx	xxxxx	xxxx	xxxx	xxxxx			425	xxxx	xxxxx	xxxx	xxxx	xxxxx		
Move Cap.:	900	xxxx	xxxxx	xxxx	xxxx	xxxxx			411	xxxx	xxxxx	xxxx	xxxx	xxxxx		
Volume/Cap:	0.04	xxxx	xxxx	xxxx	xxxx	xxxx			0.01	xxxx	xxxx	xxxx	xxxx	xxxx		
Level Of Service Module:																
2Way95thQ:	0.1	xxxx	xxxxx	xxxx	xxxx	xxxxx			0.0	xxxx	xxxxx	xxxx	xxxx	xxxxx		
Control Del:	9.2	xxxx	xxxxx	xxxxx	xxxx	xxxxx			13.9	xxxx	xxxxx	xxxxx	xxxx	xxxxx		
LOS by Move:	A	*	*	*	*	*			B	*	*	*	*	*		
Movement:	LT	LTR	RT	LT	LTR	RT			LT	LTR	RT	LT	LTR	RT		
Shared Cap.:	xxxx	xxxx	xxxxx	xxxx	xxxx	xxxxx			xxxx	xxxx	xxxxx	xxxx	xxxx	xxxxx		
SharedQueue:	xxxxx	xxxx	xxxxx	xxxxx	xxxx	xxxxx			xxxxx	xxxx	xxxxx	xxxxx	xxxx	xxxxx		
Shrd ConDel:	xxxxx	xxxx	xxxxx	xxxxx	xxxx	xxxxx			xxxxx	xxxx	xxxxx	xxxxx	xxxx	xxxxx		
Shared LOS:	*	*	*	*	*	*			*	*	*	*	*	*		
ApproachDel:	xxxxxx			xxxxxx						13.9			xxxxxx			
ApproachLOS:	*			*						B			*			

Note: Queue reported is the number of cars per lane.

cum+proj am Fri Feb 8, 2008 12:17:53 Page 5-1

Pacifica Estates Traffic Impact Study
Existing Plus Cumulative Plus Project Conditions
AM Peak Hour

Level Of Service Computation Report
2000 HCM Operations Method (Future Volume Alternative)

****

Intersection #3 Mission Road / Sterling Bridge Rd.

****

Cycle (sec): 90 Critical Vol./Cap.(X): 0.440
Loss Time (sec): 12 (Y+R=4.0 sec) Average Delay (sec/veh): 6.1
Optimal Cycle: 37 Level Of Service: A

****

Approach:	North Bound			South Bound			East Bound			West Bound		
Movement:	L -	T -	R	L -	T -	R	L -	T -	R	L -	T -	R
Control:	Protected			Protected			Split Phase			Split Phase		
Rights:		Include			Include			Include			Include	
Min. Green:	0	10	10	5	10	10	0	0	0	5	0	5
Lanes:	0 0	2 0	1	1 0	2 0	0	0 0	0 0	0	1 0	0 0	1
Volume Module:												
Base Vol:	0	897	24	22	961	0	0	0	0	59	0	33
Growth Adj:	1.10	1.10	1.10	1.10	1.10	1.10	1.10	1.10	1.10	1.10	1.10	1.10
Initial Bse:	0	987	26	24	1057	0	0	0	0	65	0	36
Added Vol:	0	5	0	0	2	0	0	0	0	0	0	0
Cum/U-Turns:	0	137	0	0	105	0	0	0	0	0	0	0
Initial Fut:	0	1129	26	24	1164	0	0	0	0	65	0	36
User Adj:	1.00	1.00	1.00	1.00	1.00	1.00	1.00	1.00	1.00	1.00	1.00	1.00
PHF Adj:	0.95	0.95	0.95	0.95	0.95	0.95	0.95	0.95	0.95	0.95	0.95	0.95
PHF Volume:	0	1188	28	25	1225	0	0	0	0	68	0	38
Reduct Vol:	0	0	0	0	0	0	0	0	0	0	0	0
Reduced Vol:	0	1188	28	25	1225	0	0	0	0	68	0	38
PCE Adj:	1.00	1.00	1.00	1.00	1.00	1.00	1.00	1.00	1.00	1.00	1.00	1.00
MLF Adj:	1.00	1.00	1.00	1.00	1.00	1.00	1.00	1.00	1.00	1.00	1.00	1.00
Final Vol.:	0	1188	28	25	1225	0	0	0	0	68	0	38
Saturation Flow Module:												
Sat/Lane:	1900	1900	1900	1900	1900	1900	1900	1900	1900	1900	1900	1900
Adjustment:	1.00	0.95	0.85	0.95	0.95	1.00	1.00	1.00	1.00	0.95	1.00	0.85
Lanes:	0.00	2.00	1.00	1.00	2.00	0.00	0.00	0.00	0.00	1.00	0.00	1.00
Final Sat.:	0	3610	1615	1805	3610	0	0	0	0	1805	0	1615
Capacity Analysis Module:												
Vol/Sat:	0.00	0.33	0.02	0.01	0.34	0.00	0.00	0.00	0.00	0.04	0.00	0.02
Crit Moves:		****		****						****		
Green/Cycle:	0.00	0.73	0.73	0.06	0.78	0.00	0.00	0.00	0.00	0.08	0.00	0.08
Volume/Cap:	0.00	0.45	0.02	0.25	0.43	0.00	0.00	0.00	0.00	0.45	0.00	0.28
Delay/Veh:	0.0	5.1	3.4	42.1	3.3	0.0	0.0	0.0	0.0	41.4	0.0	39.9
User DelAdj:	1.00	1.00	1.00	1.00	1.00	1.00	1.00	1.00	1.00	1.00	1.00	1.00
AdjDel/Veh:	0.0	5.1	3.4	42.1	3.3	0.0	0.0	0.0	0.0	41.4	0.0	39.9
LOS by Move:	A	A	A	D	A	A	A	A	A	D	A	D
HCM2kAvgQ:	0	7	0	1	6	0	0	0	0	2	0	1

****

Note: Queue reported is the number of cars per lane.

cum+proj am Fri Feb 8, 2008 12:17:53 Page 6-1

Pacifica Estates Traffic Impact Study
Existing Plus Cumulative Plus Project Conditions
AM Peak Hour

Level Of Service Computation Report
2000 HCM Operations Method (Future Volume Alternative)

****

Intersection #4 Mission Road / Stagecoach Lane

****

Cycle (sec): 90 Critical Vol./Cap.(X): 0.775
Loss Time (sec): 12 (Y+R=4.0 sec) Average Delay (sec/veh): 23.1
Optimal Cycle: 69 Level Of Service: C

****

Approach:	North Bound			South Bound			East Bound			West Bound		
Movement:	L -	T -	R	L -	T -	R	L -	T -	R	L -	T -	R
Control:	Protected			Protected			Permitted			Permitted		
Rights:		Include			Include			Include			Include	
Min. Green:	5	10	10	5	10	10	10	10	10	10	10	10
Lanes:	1 0	1 1	0	2 0	1 1	0	0 0	1! 0	0	1 0	0 1	0
Volume Module:												
Base Vol:	0	675	310	304	708	0	0	0	0	209	0	201
Growth Adj:	1.10	1.10	1.10	1.10	1.10	1.10	1.10	1.10	1.10	1.10	1.10	1.10
Initial Bse:	0	743	341	334	779	0	0	0	0	230	0	221
Added Vol:	0	3	0	1	6	0	0	0	0	0	0	1
Cum/U-Turns:	0	127	23	7	93	0	0	0	0	36	0	3
Initial Fut:	0	873	364	342	878	0	0	0	0	266	0	225
User Adj:	1.00	1.00	1.00	1.00	1.00	1.00	1.00	1.00	1.00	1.00	1.00	1.00
PHF Adj:	0.95	0.95	0.95	0.95	0.95	0.95	0.95	0.95	0.95	0.95	0.95	0.95
PHF Volume:	0	918	383	360	924	0	0	0	0	280	0	237
Reduct Vol:	0	0	0	0	0	0	0	0	0	0	0	0
Reduced Vol:	0	918	383	360	924	0	0	0	0	280	0	237
PCE Adj:	1.00	1.00	1.00	1.00	1.00	1.00	1.00	1.00	1.00	1.00	1.00	1.00
MLF Adj:	1.00	1.00	1.00	1.00	1.00	1.00	1.00	1.00	1.00	1.00	1.00	1.00
Final Vol.:	0	918	383	360	924	0	0	0	0	280	0	237
Saturation Flow Module:												
Sat/Lane:	1900	1900	1900	1900	1900	1900	1900	1900	1900	1900	1900	1900
Adjustment:	1.00	0.91	0.91	0.92	0.95	0.95	1.00	1.00	1.00	0.77	1.00	0.85
Lanes:	1.00	1.41	0.59	2.00	2.00	0.00	0.00	1.00	0.00	1.00	0.00	1.00
Final Sat.:	1900	2435	1016	3502	3610	0	0	1900	0	1461	0	1615
Capacity Analysis Module:												
Vol/Sat:	0.00	0.38	0.38	0.10	0.26	0.00	0.00	0.00	0.00	0.19	0.00	0.15
Crit Moves:		****		****						****		
Green/Cycle:	0.00	0.49	0.49	0.13	0.62	0.00	0.00	0.00	0.00	0.25	0.00	0.25
Volume/Cap:	0.00	0.77	0.77	0.77	0.41	0.00	0.00	0.00	0.00	0.77	0.00	0.59
Delay/Veh:	0.0	21.4	21.4	45.7	8.9	0.0	0.0	0.0	0.0	41.6	0.0	32.3
User DelAdj:	1.00	1.00	1.00	1.00	1.00	1.00	1.00	1.00	1.00	1.00	1.00	1.00
AdjDel/Veh:	0.0	21.4	21.4	45.7	8.9	0.0	0.0	0.0	0.0	41.6	0.0	32.3
LOS by Move:	A	C	C	D	A	A	A	A	A	D	A	C
HCM2kAvgQ:	0	17	17	7	7	0	0	0	0	9	0	7

****

Note: Queue reported is the number of cars per lane.

cum+proj am Fri Feb 8, 2008 12:17:53 Page 7-1

Pacifica Estates Traffic Impact Study
Existing Plus Cumulative Plus Project Conditions
AM Peak Hour

Level Of Service Computation Report
2000 HCM Operations Method (Future Volume Alternative)

Intersection #5 Mission Road / Olive Hill Road

Cycle (sec): 90 Critical Vol./Cap.(X): 0.569
Loss Time (sec): 12 (Y+R=4.0 sec) Average Delay (sec/veh): 12.1
Optimal Cycle: 45 Level Of Service: B

Approach:	North Bound				South Bound				East Bound				West Bound			
Movement:	L	- T	- R		L	- T	- R		L	- T	- R		L	- T	- R	
Control:	Protected				Protected				Split Phase				Split Phase			
Rights:	Include				Include				Include				Include			
Min. Green:	5	10	0		0	10	10		5	0	5		0	0	0	
Lanes:	1 0	2 0	0		0 0	1 1	0		1 0	1! 0	0		0 0	0 0	0	
Volume Module:																
Base Vol:	39	799	0		0	778	195		213	0	51		0	0	0	
Growth Adj:	1.10	1.10	1.10		1.10	1.10	1.10		1.10	1.10	1.10		1.10	1.10	1.10	
Initial Bse:	43	879	0		0	856	215		234	0	56		0	0	0	
Added Vol:	0	2	0		0	5	1		0	0	0		0	0	0	
Cumulative:	0	137	0		0	116	13		13	0	0		0	0	0	
Initial Fut:	43	1018	0		0	977	229		247	0	56		0	0	0	
User Adj:	1.00	1.00	1.00		1.00	1.00	1.00		1.00	1.00	1.00		1.00	1.00	1.00	
PHF Adj:	0.95	0.95	0.95		0.95	0.95	0.95		0.95	0.95	0.95		0.95	0.95	0.95	
PHF Volume:	45	1071	0		0	1028	241		260	0	59		0	0	0	
Reduct Vol:	0	0	0		0	0	0		0	0	0		0	0	0	
Reduced Vol:	45	1071	0		0	1028	241		260	0	59		0	0	0	
PCE Adj:	1.00	1.00	1.00		1.00	1.00	1.00		1.00	1.00	1.00		1.00	1.00	1.00	
MLF Adj:	1.00	1.00	1.00		1.00	1.00	1.00		1.00	1.00	1.00		1.00	1.00	1.00	
Final Vol.:	45	1071	0		0	1028	241		260	0	59		0	0	0	
Saturation Flow Module:																
Sat/Lane:	1900	1900	1900		1900	1900	1900		1900	1900	1900		1900	1900	1900	
Adjustment:	0.95	0.95	1.00		1.00	0.92	0.92		0.93	1.00	0.93		1.00	1.00	1.00	
Lanes:	1.00	2.00	0.00		0.00	1.62	0.38		1.69	0.00	0.31		0.00	0.00	0.00	
Final Sat.:	1805	3610	0		0	2844	665		2996	0	554		0	0	0	
Capacity Analysis Module:																
Vol/Sat:	0.03	0.30	0.00		0.00	0.36	0.36		0.09	0.00	0.11		0.00	0.00	0.00	
Crit Moves:	****					****					****					
Green/Cycle:	0.06	0.68	0.00		0.00	0.63	0.63		0.18	0.00	0.18		0.00	0.00	0.00	
Volume/Cap:	0.45	0.44	0.00		0.00	0.58	0.58		0.47	0.00	0.58		0.00	0.00	0.00	
Delay/Veh:	44.4	6.6	0.0		0.0	10.2	10.2		33.3	0.0	35.0		0.0	0.0	0.0	
User DelAdj:	1.00	1.00	1.00		1.00	1.00	1.00		1.00	1.00	1.00		1.00	1.00	1.00	
AdjDel/Veh:	44.4	6.6	0.0		0.0	10.2	10.2		33.3	0.0	35.0		0.0	0.0	0.0	
LOS by Move:	D	A	A		A	B	B		C	A	C		A	A	A	
HCM2kAvgQ:	2	7	0		0	11	11		4	0	6		0	0	0	

Note: Queue reported is the number of cars per lane.

cum+proj am Fri Feb 8, 2008 12:17:53 Page 8-1

Pacifica Estates Traffic Impact Study
Existing Plus Cumulative Plus Project Conditions
AM Peak Hour

Level Of Service Computation Report
2000 HCM Unsignalized Method (Future Volume Alternative)

Intersection #6 Mission Road / Project Access

Average Delay (sec/veh): 0.1 Worst Case Level Of Service: B[13.3]

Approach:	North Bound				South Bound				East Bound				West Bound			
Movement:	L	- T	- R		L	- T	- R		L	- T	- R		L	- T	- R	
Control:	Uncontrolled				Uncontrolled				Stop Sign				Stop Sign			
Rights:	Include				Include				Include				Include			
Lanes:	0 0	1 1	0		0 0	1 1	0		0 0	0 0	0		0 0	1! 0	0	
Volume Module:																
Base Vol:	0	921	0		0	1020	0		0	0	0		0	0	0	
Growth Adj:	1.10	1.10	1.10		1.10	1.10	1.10		1.10	1.10	1.10		1.10	1.10	1.10	
Initial Bse:	0	1013	0		0	1122	0		0	0	0		0	0	0	
Added Vol:	0	0	3		2	0	0		0	0	0		7	0	5	
Cum/U-Turns:	0	130	2		-2	107	0		0	0	0		-7	0	7	
Initial Fut:	0	1143	5		0	1229	0		0	0	0		0	0	12	
User Adj:	1.00	1.00	1.00		1.00	1.00	1.00		1.00	1.00	1.00		1.00	1.00	1.00	
PHF Adj:	0.95	0.95	0.95		0.95	0.95	0.95		0.95	0.95	0.95		0.95	0.95	0.95	
PHF Volume:	0	1203	5		0	1294	0		0	0	0		0	0	13	
Reduct Vol:	0	0	0		0	0	0		0	0	0		0	0	0	
Final Vol.:	0	1203	5		0	1294	0		0	0	0		0	0	13	
Critical Gap Module:																
Critical Gp:	xxxxx	xxxx	xxxxx		xxxxx	xxxx	xxxxx		xxxxx	xxxx	xxxxx		xxxxx	xxxx	6.9	
FollowUpTim:	xxxxx	xxxx	xxxxx		xxxxx	xxxx	xxxxx		xxxxx	xxxx	xxxxx		xxxxx	xxxx	3.3	
Capacity Module:																
Cnflict Vol:	xxxx	xxxx	xxxxx		xxxx	xxxx	xxxxx		xxxx	xxxx	xxxxx		xxxx	xxxx	604	
Potent Cap.:	xxxx	xxxx	xxxxx		xxxx	xxxx	xxxxx		xxxx	xxxx	xxxxx		xxxx	xxxx	446	
Move Cap.:	xxxx	xxxx	xxxxx		xxxx	xxxx	xxxxx		xxxx	xxxx	xxxxx		xxxx	xxxx	446	
Volume/Cap:	xxxx	xxxx	xxxx		xxxx	xxxx	xxxx		xxxx	xxxx	xxxx		xxxx	xxxx	0.03	
Level Of Service Module:																
2Way95thQ:	xxxx	xxxx	xxxxx		xxxx	xxxx	xxxxx		xxxx	xxxx	xxxxx		xxxx	xxxx	xxxxx	
Control Del:	xxxxx	xxxx	xxxxx		xxxxx	xxxx	xxxxx		xxxxx	xxxx	xxxxx		xxxxx	xxxx	xxxxx	
LOS by Move:	*	*	*		*	*	*		*	*	*		*	*	*	
Movement:	LT	- LTR	- RT		LT	- LTR	- RT		LT	- LTR	- RT		LT	- LTR	- RT	
Shared Cap.:	xxxx	xxxx	xxxxx		xxxx	xxxx	xxxxx		xxxx	xxxx	xxxxx		xxxx	446	xxxxx	
SharedQueue:	xxxxx	xxxx	xxxxx		0.0	xxxx	xxxxx		xxxxx	xxxx	xxxxx		xxxxx	0.1	xxxxx	
Shrd ConDel:	xxxxx	xxxx	xxxxx		9.0	xxxx	xxxxx		xxxxx	xxxx	xxxxx		xxxxx	13.3	xxxxx	
Shared LOS:	*	*	*		A	*	*		*	*	*		*	B	*	
ApproachDel:	xxxxxx				xxxxxx				xxxxxx					13.3		
ApproachLOS:		*				*				*				B		

Note: Queue reported is the number of cars per lane.

cum+proj pm Fri Feb 8, 2008 12:18:06 Page 1-1

Pacifica Estates Traffic Impact Study
Existing Plus Cumulative Plus Project Conditions
PM Peak Hour

Scenario Report

Scenario:	cum+proj pm
Command:	cum+proj pm
Volume:	cum+proj pm
Geometry:	existing
Impact Fee:	Default Impact Fee
Trip Generation:	pm
Trip Distribution:	project
Paths:	Default Paths
Routes:	Default Routes
Configuration:	cum+proj pm

cum+proj pm Fri Feb 8, 2008 12:18:08 Page 2-1

Pacifica Estates Traffic Impact Study
Existing Plus Cumulative Plus Project Conditions
PM Peak Hour

Impact Analysis Report
Level Of Service

Intersection	Base LOS	Base Del/ Veh	Base V/ C	Future LOS	Future Del/ Veh	Future V/ C	Change in
# 1 Southbound Mission Road / Air	C	17.9	0.000	C	21.7	0.000	+ 3.780 D/V
# 2 Northbound Mission Road / Air	B	14.5	0.000	C	15.7	0.000	+ 1.165 D/V
# 3 Mission Road / Sterling Bridge	A	5.8	0.481	A	5.7	0.528	-0.013 D/V
# 4 Mission Road / Stagecoach Lane	C	21.1	0.768	C	24.0	0.859	+ 2.929 D/V
# 5 Mission Road / Olive Hill Road	B	15.4	0.610	B	15.5	0.684	+ 0.045 D/V
# 6 Mission Road / Project Access	A	0.0	0.000	C	15.6	0.000	+15.550 D/V

cum+proj pm Fri Feb 8, 2008 12:18:08 Page 3-1

Pacifica Estates Traffic Impact Study
Existing Plus Cumulative Plus Project Conditions
PM Peak Hour

Level Of Service Computation Report
2000 HCM Unsignalized Method (Future Volume Alternative)

Intersection #1 Southbound Mission Road / Air Park Road

Average Delay (sec/veh): 0.6 Worst Case Level Of Service: C[21.7]

Approach:	North Bound				South Bound				East Bound				West Bound			
Movement:	L	-	T	- R	L	-	T	- R	L	-	T	- R	L	-	T	- R
Control:	Uncontrolled				Uncontrolled				Stop Sign				Stop Sign			
Rights:	Include				Include				Include				Include			
Lanes:	1	0	0	0 0	0	0	1	1 0	0	0	1!	0 0	0	0	0	0 0
Volume Module:																
Base Vol:	16		0	0	0	1051		4	9		0	15	0		0	0
Growth Adj:	1.10	1.10		1.10	1.10	1.10		1.10	1.10	1.10		1.10	1.10	1.10		1.10
Initial Bse:	18		0	0	0	1156		4	10		0	17	0		0	0
Added Vol:	0		0	0	0	6		0	0		0	0	0		0	0
Cumulative:	4		0	0	0	176		0	0		0	0	0		0	0
Initial Fut:	22		0	0	0	1338		4	10		0	17	0		0	0
User Adj:	1.00	1.00		1.00	1.00	1.00		1.00	1.00	1.00		1.00	1.00	1.00		1.00
PHF Adj:	0.95	0.95		0.95	0.95	0.95		0.95	0.95	0.95		0.95	0.95	0.95		0.95
PHF Volume:	23		0	0	0	1409		5	10		0	17	0		0	0
Reduct Vol:	0		0	0	0	0		0	0		0	0	0		0	0
Final Vol.:	23		0	0	0	1409		5	10		0	17	0		0	0
Critical Gap Module:																
Critical Gp:	4.1	xxxx	xxxxx	xxxxx	xxxx	xxxxx			6.4	xxxx		6.2	xxxxx	xxxx	xxxxx	
FollowUpTim:	2.2	xxxx	xxxxx	xxxxx	xxxx	xxxxx			3.5	xxxx		3.3	xxxxx	xxxx	xxxxx	
Capacity Module:																
Cnflict Vol:	1413	xxxx	xxxxx	xxxx	xxxx	xxxxx			1456	xxxx		707	xxxx	xxxx	xxxxx	
Potent Cap.:	489	xxxx	xxxxx	xxxx	xxxx	xxxxx			144	xxxx		439	xxxx	xxxx	xxxxx	
Move Cap.:	489	xxxx	xxxxx	xxxx	xxxx	xxxxx			139	xxxx		439	xxxx	xxxx	xxxxx	
Volume/Cap:	0.05	xxxx	xxxx	xxxx	xxxx	xxxx			0.07	xxxx		0.04	xxxx	xxxx	xxxx	
Level Of Service Module:																
2Way95thQ:	0.1	xxxx	xxxxx	xxxx	xxxx	xxxxx			xxxx	xxxx	xxxxx		xxxx	xxxx	xxxxx	
Control Del:	12.7	xxxx	xxxxx	xxxxx	xxxx	xxxxx			xxxxx	xxxx	xxxxx		xxxxx	xxxx	xxxxx	
LOS by Move:	B	*	*	*	*	*			*	*	*		*	*	*	
Movement:	LT	-	LTR	- RT	LT	-	LTR	- RT	LT	-	LTR	- RT	LT	-	LTR	- RT
Shared Cap.:	xxxx	xxxx	xxxxx		xxxx	xxxx	xxxxx		xxxx		243	xxxxx	xxxx	xxxx	xxxxx	
SharedQueue:	xxxxx	xxxx	xxxxx		xxxxx	xxxx	xxxxx		xxxxx		0.4	xxxxx	xxxxx	xxxx	xxxxx	
Shrd ConDel:	xxxxx	xxxx	xxxxx		xxxxx	xxxx	xxxxx		xxxxx		21.7	xxxxx	xxxxx	xxxx	xxxxx	
Shared LOS:	*	*	*		*	*	*		*		C	*	*	*	*	
ApproachDel:	xxxxxx				xxxxxx				21.7				xxxxxx			
ApproachLOS:	*				*				C				*			

Note: Queue reported is the number of cars per lane.

cum+proj pm Fri Feb 8, 2008 12:18:08 Page 4-1

Pacifica Estates Traffic Impact Study
Existing Plus Cumulative Plus Project Conditions
PM Peak Hour

Level Of Service Computation Report
2000 HCM Unsignalized Method (Future Volume Alternative)

Intersection #2 Northbound Mission Road / Air Park Road

Average Delay (sec/veh): 0.2 Worst Case Level Of Service: C[15.7]

Approach:	North Bound				South Bound				East Bound				West Bound			
Movement:	L	-	T	- R	L	-	T	- R	L	-	T	- R	L	-	T	- R
Control:	Uncontrolled				Uncontrolled				Stop Sign				Stop Sign			
Rights:	Include				Include				Include				Include			
Lanes:	1	0	2	0 0	0	0	0	0 0	1	0	0	0 0	0	0	0	0 0
Volume Module:																
Base Vol:	16	1186		0	0		0	0	9		0	0	0		0	0
Growth Adj:	1.10	1.10		1.10	1.10	1.10		1.10	1.10	1.10		1.10	1.10	1.10		1.10
Initial Bse:	18	1305		0	0		0	0	10		0	0	0		0	0
Added Vol:	0	2		0	0		0	0	0		0	0	0		0	0
Cumulative:	4	135		0	0		0	0	0		0	0	0		0	0
Initial Fut:	22	1442		0	0		0	0	10		0	0	0		0	0
User Adj:	1.00	1.00		1.00	1.00	1.00		1.00	1.00	1.00		1.00	1.00	1.00		1.00
PHF Adj:	0.95	0.95		0.95	0.95	0.95		0.95	0.95	0.95		0.95	0.95	0.95		0.95
PHF Volume:	23	1517		0	0		0	0	10		0	0	0		0	0
Reduct Vol:	0	0		0	0		0	0	0		0	0	0		0	0
Final Vol.:	23	1517		0	0		0	0	10		0	0	0		0	0
Critical Gap Module:																
Critical Gp:	4.1	xxxx	xxxxx	xxxxx	xxxx	xxxxx			6.4	xxxx	xxxxx	xxxxx	xxxx	xxxxx		
FollowUpTim:	2.2	xxxx	xxxxx	xxxxx	xxxx	xxxxx			3.5	xxxx	xxxxx	xxxxx	xxxx	xxxxx		
Capacity Module:																
Cnflict Vol:	0	xxxx	xxxxx	xxxx	xxxx	xxxxx			804	xxxx	xxxxx	xxxx	xxxx	xxxxx		
Potent Cap.:	900	xxxx	xxxxx	xxxx	xxxx	xxxxx			355	xxxx	xxxxx	xxxx	xxxx	xxxxx		
Move Cap.:	900	xxxx	xxxxx	xxxx	xxxx	xxxxx			348	xxxx	xxxxx	xxxx	xxxx	xxxxx		
Volume/Cap:	0.03	xxxx	xxxx	xxxx	xxxx	xxxx			0.03	xxxx	xxxx	xxxx	xxxx	xxxx		
Level Of Service Module:																
2Way95thQ:	0.1	xxxx	xxxxx	xxxx	xxxx	xxxxx			0.1	xxxx	xxxxx	xxxx	xxxx	xxxxx		
Control Del:	9.1	xxxx	xxxxx	xxxxx	xxxx	xxxxx			15.7	xxxx	xxxxx	xxxxx	xxxx	xxxxx		
LOS by Move:	A	*	*	*	*	*			C	*	*	*	*	*		
Movement:	LT	-	LTR	- RT	LT	-	LTR	- RT	LT	-	LTR	- RT	LT	-	LTR	- RT
Shared Cap.:	xxxx	xxxx	xxxxx		xxxx	xxxx	xxxxx		xxxx	xxxx	xxxxx		xxxx	xxxx	xxxxx	
SharedQueue:	xxxxx	xxxx	xxxxx		xxxxx	xxxx	xxxxx		xxxxx	xxxx	xxxxx		xxxxx	xxxx	xxxxx	
Shrd ConDel:	xxxxx	xxxx	xxxxx		xxxxx	xxxx	xxxxx		xxxxx	xxxx	xxxxx		xxxxx	xxxx	xxxxx	
Shared LOS:	*	*	*		*	*	*		*	*	*		*	*	*	
ApproachDel:	xxxxxx				xxxxxx				15.7				xxxxxx			
ApproachLOS:	*				*				C				*			

Note: Queue reported is the number of cars per lane.

cum+proj pm Fri Feb 8, 2008 12:18:08 Page 5-1

Pacifica Estates Traffic Impact Study
Existing Plus Cumulative Plus Project Conditions
PM Peak Hour

Level Of Service Computation Report
2000 HCM Operations Method (Future Volume Alternative)

Intersection #3 Mission Road / Sterling Bridge Rd.

Cycle (sec):	90	Critical Vol./Cap.(X):	0.528
Loss Time (sec):	12 (Y+R=4.0 sec)	Average Delay (sec/veh):	5.7
Optimal Cycle:	42	Level Of Service:	A

Approach:	North Bound			South Bound			East Bound			West Bound		
Movement:	L	T	R	L	T	R	L	T	R	L	T	R
Control:	Protected			Protected			Split Phase			Split Phase		
Rights:	Include			Include			Include			Include		
Min. Green:	0	10	10	5	10	10	0	0	0	5	0	5
Lanes:	0 0	2 0	1	1 0	2 0	0	0 0	0 0	0	1 0	0 0	1
Volume Module:												
Base Vol:	0	1137	57	58	980	0	0	0	0	23	0	31
Growth Adj:	1.10	1.10	1.10	1.10	1.10	1.10	1.10	1.10	1.10	1.10	1.10	1.10
Initial Bse:	0	1251	63	64	1078	0	0	0	0	25	0	34
Added Vol:	0	2	0	0	6	0	0	0	0	0	0	0
Cum/U-Turns:	0	139	0	0	180	0	0	0	0	0	0	0
Initial Fut:	0	1392	63	64	1264	0	0	0	0	25	0	34
User Adj:	1.00	1.00	1.00	1.00	1.00	1.00	1.00	1.00	1.00	1.00	1.00	1.00
PHF Adj:	0.95	0.95	0.95	0.95	0.95	0.95	0.95	0.95	0.95	0.95	0.95	0.95
PHF Volume:	0	1465	66	67	1331	0	0	0	0	27	0	36
Reduct Vol:	0	0	0	0	0	0	0	0	0	0	0	0
Reduced Vol:	0	1465	66	67	1331	0	0	0	0	27	0	36
PCE Adj:	1.00	1.00	1.00	1.00	1.00	1.00	1.00	1.00	1.00	1.00	1.00	1.00
MLF Adj:	1.00	1.00	1.00	1.00	1.00	1.00	1.00	1.00	1.00	1.00	1.00	1.00
Final Vol.:	0	1465	66	67	1331	0	0	0	0	27	0	36
Saturation Flow Module:												
Sat/Lane:	1900	1900	1900	1900	1900	1900	1900	1900	1900	1900	1900	1900
Adjustment:	1.00	0.95	0.85	0.95	0.95	1.00	1.00	1.00	1.00	0.95	1.00	0.85
Lanes:	0.00	2.00	1.00	1.00	2.00	0.00	0.00	0.00	0.00	1.00	0.00	1.00
Final Sat.:	0	3610	1615	1805	3610	0	0	0	0	1805	0	1615
Capacity Analysis Module:												
Vol/Sat:	0.00	0.41	0.04	0.04	0.37	0.00	0.00	0.00	0.00	0.01	0.00	0.02
Crit Moves:		****		****						****		
Green/Cycle:	0.00	0.74	0.74	0.07	0.81	0.00	0.00	0.00	0.00	0.06	0.00	0.06
Volume/Cap:	0.00	0.55	0.06	0.55	0.45	0.00	0.00	0.00	0.00	0.27	0.00	0.40
Delay/Veh:	0.0	5.2	3.1	45.6	2.7	0.0	0.0	0.0	0.0	42.2	0.0	44.0
User DelAdj:	1.00	1.00	1.00	1.00	1.00	1.00	1.00	1.00	1.00	1.00	1.00	1.00
AdjDel/Veh:	0.0	5.2	3.1	45.6	2.7	0.0	0.0	0.0	0.0	42.2	0.0	44.0
LOS by Move:	A	A	A	D	A	A	A	A	A	D	A	D
HCM2kAvgQ:	0	10	1	3	6	0	0	0	0	1	0	1

Note: Queue reported is the number of cars per lane.

cum+proj pm Fri Feb 8, 2008 12:18:08 Page 6-1

Pacifica Estates Traffic Impact Study
Existing Plus Cumulative Plus Project Conditions
PM Peak Hour

Level Of Service Computation Report
2000 HCM Operations Method (Future Volume Alternative)

Intersection #4 Mission Road / Stagecoach Lane

Cycle (sec):	90	Critical Vol./Cap.(X):	0.859
Loss Time (sec):	12 (Y+R=4.0 sec)	Average Delay (sec/veh):	24.0
Optimal Cycle:	89	Level Of Service:	C

Approach:	North Bound			South Bound			East Bound			West Bound		
Movement:	L	T	R	L	T	R	L	T	R	L	T	R
Control:	Protected			Protected			Permitted			Permitted		
Rights:	Include			Include			Include			Include		
Min. Green:	5	10	10	5	10	10	10	10	10	10	10	10
Lanes:	1 0	1 1	0	2 0	1 1	0	0 0	1! 0	0	1 0	0 1	0
Volume Module:												
Base Vol:	0	1005	242	211	807	0	0	0	0	232	0	201
Growth Adj:	1.10	1.10	1.10	1.10	1.10	1.10	1.10	1.10	1.10	1.10	1.10	1.10
Initial Bse:	0	1106	266	232	888	0	0	0	0	255	0	221
Added Vol:	0	8	0	1	3	0	0	0	0	0	0	2
Cum/U-Turns:	0	129	44	11	171	0	0	0	0	28	0	6
Initial Fut:	0	1243	310	244	1062	0	0	0	0	283	0	229
User Adj:	1.00	1.00	1.00	1.00	1.00	1.00	1.00	1.00	1.00	1.00	1.00	1.00
PHF Adj:	0.95	0.95	0.95	0.95	0.95	0.95	0.95	0.95	0.95	0.95	0.95	0.95
PHF Volume:	0	1308	327	257	1118	0	0	0	0	298	0	241
Reduct Vol:	0	0	0	0	0	0	0	0	0	0	0	0
Reduced Vol:	0	1308	327	257	1118	0	0	0	0	298	0	241
PCE Adj:	1.00	1.00	1.00	1.00	1.00	1.00	1.00	1.00	1.00	1.00	1.00	1.00
MLF Adj:	1.00	1.00	1.00	1.00	1.00	1.00	1.00	1.00	1.00	1.00	1.00	1.00
Final Vol.:	0	1308	327	257	1118	0	0	0	0	298	0	241
Saturation Flow Module:												
Sat/Lane:	1900	1900	1900	1900	1900	1900	1900	1900	1900	1900	1900	1900
Adjustment:	1.00	0.92	0.92	0.92	0.95	0.95	1.00	1.00	1.00	0.77	1.00	0.85
Lanes:	1.00	1.60	0.40	2.00	2.00	0.00	0.00	1.00	0.00	1.00	0.00	1.00
Final Sat.:	1900	2802	700	3502	3610	0	0	1900	0	1461	0	1615
Capacity Analysis Module:												
Vol/Sat:	0.00	0.47	0.47	0.07	0.31	0.00	0.00	0.00	0.00	0.20	0.00	0.15
Crit Moves:		****		****						****		
Green/Cycle:	0.00	0.54	0.54	0.09	0.63	0.00	0.00	0.00	0.00	0.24	0.00	0.24
Volume/Cap:	0.00	0.86	0.86	0.86	0.49	0.00	0.00	0.00	0.00	0.86	0.00	0.63
Delay/Veh:	0.0	21.8	21.8	61.8	9.1	0.0	0.0	0.0	0.0	51.7	0.0	34.1
User DelAdj:	1.00	1.00	1.00	1.00	1.00	1.00	1.00	1.00	1.00	1.00	1.00	1.00
AdjDel/Veh:	0.0	21.8	21.8	61.8	9.1	0.0	0.0	0.0	0.0	51.7	0.0	34.1
LOS by Move:	A	C	C	E	A	A	A	A	A	D	A	C
HCM2kAvgQ:	0	23	23	6	9	0	0	0	0	11	0	7

Note: Queue reported is the number of cars per lane.

Pacifica Estates Traffic Impact Study
Existing Plus Cumulative Plus Project Conditions
PM Peak Hour

Level Of Service Computation Report
2000 HCM Operations Method (Future Volume Alternative)

Intersection #5 Mission Road / Olive Hill Road

Cycle (sec): 90 Critical Vol./Cap.(X): 0.684
Loss Time (sec): 12 (Y+R=4.0 sec) Average Delay (sec/veh): 15.5
Optimal Cycle: 56 Level Of Service: B

Approach:	North Bound				South Bound				East Bound				West Bound			
Movement:	L	-	T	- R	L	-	T	- R	L	-	T	- R	L	-	T	- R
Control:	Protected				Protected				Split Phase				Split Phase			
Rights:	Include				Include				Include				Include			
Min. Green:	5		10	0	0		10	10	5		0	5	0		0	0
Lanes:	1	0	2	0 0	0	0	1	1 0	1	0	1!	0 0	0	0	0	0 0
Volume Module:																
Base Vol:	52		866	0	0		800	250	361		0	45	0		0	0
Growth Adj:	1.10		1.10	1.10	1.10		1.10	1.10	1.10		1.10	1.10	1.10		1.10	1.10
Initial Bse:	57		953	0	0		880	275	397		0	50	0		0	0
Added Vol:	0		7	0	0		3	0	1		0	0	0		0	0
Cumulative:	0		157	0	0		183	16	16		0	0	0		0	0
Initial Fut:	57		1117	0	0		1066	291	414		0	50	0		0	0
User Adj:	1.00		1.00	1.00	1.00		1.00	1.00	1.00		1.00	1.00	1.00		1.00	1.00
PHF Adj:	0.95		0.95	0.95	0.95		0.95	0.95	0.95		0.95	0.95	0.95		0.95	0.95
PHF Volume:	60		1175	0	0		1122	306	436		0	52	0		0	0
Reduct Vol:	0		0	0	0		0	0	0		0	0	0		0	0
Reduced Vol:	60		1175	0	0		1122	306	436		0	52	0		0	0
PCE Adj:	1.00		1.00	1.00	1.00		1.00	1.00	1.00		1.00	1.00	1.00		1.00	1.00
MLF Adj:	1.00		1.00	1.00	1.00		1.00	1.00	1.00		1.00	1.00	1.00		1.00	1.00
Final Vol.:	60		1175	0	0		1122	306	436		0	52	0		0	0
Saturation Flow Module:																
Sat/Lane:	1900		1900	1900	1900		1900	1900	1900		1900	1900	1900		1900	1900
Adjustment:	0.95		0.95	1.00	1.00		0.92	0.92	0.94		1.00	0.94	1.00		1.00	1.00
Lanes:	1.00		2.00	0.00	0.00		1.57	0.43	1.81		0.00	0.19	0.00		0.00	0.00
Final Sat.:	1805		3610	0	0		2745	749	3233		0	345	0		0	0
Capacity Analysis Module:																
Vol/Sat:	0.03		0.33	0.00	0.00		0.41	0.41	0.13		0.00	0.15	0.00		0.00	0.00
Crit Moves:	****						****					****				
Green/Cycle:	0.06		0.65	0.00	0.00		0.59	0.59	0.22		0.00	0.22	0.00		0.00	0.00
Volume/Cap:	0.60		0.50	0.00	0.00		0.69	0.69	0.62		0.00	0.69	0.00		0.00	0.00
Delay/Veh:	51.3		8.4	0.0	0.0		13.7	13.7	33.2		0.0	35.3	0.0		0.0	0.0
User DelAdj:	1.00		1.00	1.00	1.00		1.00	1.00	1.00		1.00	1.00	1.00		1.00	1.00
AdjDel/Veh:	51.3		8.4	0.0	0.0		13.7	13.7	33.2		0.0	35.3	0.0		0.0	0.0
LOS by Move:	D		A	A	A		B	B	C		A	D	A		A	A
HCM2kAvgQ:	3		9	0	0		15	15	7		0	8	0		0	0

Note: Queue reported is the number of cars per lane.

Pacifica Estates Traffic Impact Study
Existing Plus Cumulative Plus Project Conditions
PM Peak Hour

Level Of Service Computation Report
2000 HCM Unsignalized Method (Future Volume Alternative)

Intersection #6 Mission Road / Project Access

Average Delay (sec/veh): 0.0 Worst Case Level Of Service: C[15.6]

Approach:	North Bound				South Bound				East Bound				West Bound			
Movement:	L	-	T	- R	L	-	T	- R	L	-	T	- R	L	-	T	- R
Control:	Uncontrolled				Uncontrolled				Stop Sign				Stop Sign			
Rights:	Include				Include				Include				Include			
Lanes:	0	0	1	1 0	0	1	1	0 0	0	0	0	0 0	0	0	1!	0 0
Volume Module:																
Base Vol:	0		1194	0	0		1003	0	0		0	0	0		0	0
Growth Adj:	1.10		1.10	1.10	1.10		1.10	1.10	1.10		1.10	1.10	1.10		1.10	1.10
Initial Bse:	0		1313	0	0		1103	0	0		0	0	0		0	0
Added Vol:	0		0	9	6		0	0	0		0	0	4		0	2
Cum/U-Turns:	0		135	6	-6		186	0	0		0	0	-4		0	4
Initial Fut:	0		1448	15	0		1289	0	0		0	0	0		0	6
User Adj:	1.00		1.00	1.00	1.00		1.00	1.00	1.00		1.00	1.00	1.00		1.00	1.00
PHF Adj:	0.95		0.95	0.95	0.95		0.95	0.95	0.95		0.95	0.95	0.95		0.95	0.95
PHF Volume:	0		1525	16	0		1357	0	0		0	0	0		0	6
Reduct Vol:	0		0	0	0		0	0	0		0	0	0		0	0
Final Vol.:	0		1525	16	0		1357	0	0		0	0	0		0	6
Critical Gap Module:																
Critical Gp:	xxxxx		xxxx	xxxxx	xxxxx		xxxx	xxxxx	xxxxx		xxxx	xxxxx	xxxxx		xxxx	6.9
FollowUpTim:	xxxxx		xxxx	xxxxx	xxxxx		xxxx	xxxxx	xxxxx		xxxx	xxxxx	xxxxx		xxxx	3.3
Capacity Module:																
Cnflict Vol:	xxxx		xxxx	xxxxx	xxxx		xxxx	xxxxx	xxxx		xxxx	xxxxx	xxxx		xxxx	770
Potent Cap.:	xxxx		xxxx	xxxxx	xxxx		xxxx	xxxxx	xxxx		xxxx	xxxxx	xxxx		xxxx	348
Move Cap.:	xxxx		xxxx	xxxxx	xxxx		xxxx	xxxxx	xxxx		xxxx	xxxxx	xxxx		xxxx	348
Volume/Cap:	xxxx		xxxx	xxxx	xxxx		xxxx	xxxx	xxxx		xxxx	xxxx	xxxx		xxxx	0.02
Level Of Service Module:																
2Way95thQ:	xxxx		xxxx	xxxxx	xxxx		xxxx	xxxxx	xxxx		xxxx	xxxxx	xxxx		xxxx	xxxxx
Control Del:	xxxxx		xxxx	xxxxx	xxxxx		xxxx	xxxxx	xxxxx		xxxx	xxxxx	xxxxx		xxxx	xxxxx
LOS by Move:	*		*	*	*		*	*	*		*	*	*		*	*
Movement:	LT	-	LTR	- RT	LT	-	LTR	- RT	LT	-	LTR	- RT	LT	-	LTR	- RT
Shared Cap.:	xxxx		xxxx	xxxxx	xxxx		xxxx	xxxxx	xxxx		xxxx	xxxxx	xxxx		348	xxxxx
SharedQueue:	xxxxx		xxxx	xxxxx	0.0		xxxx	xxxxx	xxxxx		xxxx	xxxxx	xxxxx		0.1	xxxxx
Shrd ConDel:	xxxxx		xxxx	xxxxx	9.0		xxxx	xxxxx	xxxxx		xxxx	xxxxx	xxxxx		15.6	xxxxx
Shared LOS:	*		*	*	A		*	*	*		*	*	*		C	*
ApproachDel:	xxxxxx				xxxxxx				xxxxxx				15.6			
ApproachLOS:	*				*				*				C			

Note: Queue reported is the number of cars per lane.

APPENDIX G

Access Request Letter to Peppertree Homeowners Association

Mr. Bud Campbell
Board of Directors Peppertree Homeowners Assoc.
P.O. Box
Fallbrook, CA 92088

Ladies and Gentlemen;

I represent the owners of the 17 acre parcel immediately adjacent and south of the entrance of Peppertree Park. We are in the process of dividing the property into 21 (twenty-one) ½ half acre lots. We do have direct access from South Mission Road that can be utilized however, the Fallbrook Planning Group and the County of San Diego prefer that we consolidate our accesses over Sterling Bridge at the signalized intersection.

We are requesting access over Sterling Bridge, through the gate and an immediate right turn to the South onto the 17 acres. Please see the attached schematic.

The benefits for both the Peppertree HOA, Planning Group, County of San Diego and the owners of the 17 acres are numerous:

1. Safest ingress and egress with traffic patterns already established.
2. No impacts to Ostrich Creek thereby preserving its integrity in its entirety.
3. If Peppertree HOA grants our project the right to use Sterling Bridge, the 17 acres project would join the Peppertree HOA and pay the requisite HOA fees thus reducing the overall HOA fees for all property owners of the Peppertree Park.

Disadvantages to not granting the access through Sterling Bridge are:

1. Some north bound traffic exiting the 17 acres will use the Sterling Bridge turn around to go south.
2. Other north bound traffic will probably execute a u-turn at the Air park entry, an uncontrolled intersection.
3. The subject project maybe conditioned to install a u-turn at S. Mission Rd. and Sterling Bridge signal thereby delaying green light times for people exiting Peppertree Park.

Please give this request your serious consideration. We are happy to meet with your group and/or any homeowners. We hope to hear from you within 30 days as of the date of this letter.

Thank you.

Best Regards,

Patrick H. Miller, CCIM
Principal

Peppertree Park Homeowner's Association

c/o Spectrum Property Management ♦ P.O. Box 2383 ♦ Fallbrook, CA 92088-2383 ♦ Phone/Fax: 760-731-1010

July 7, 2008

Patrick Miller
5872 Owens Avenue, Suite 200
Carlsbad, CA 92008

Dear Mr. Miller:

The Board of Directors for Peppertree Park Homeowners Association have reviewed your correspondence and have given the matter you propose extensive consideration.

The Board has to weigh all factors relating to this proposed project in terms of how it will impact the membership and whether the Board can obtain approval of at minimum 67% of the membership as well as Eligible Mortgage Holders. A significant variable in this determination is whether the addition of this property will unduly impact the existing infrastructure and whether the additional wear and tear can be accommodated.

Upon the advice of legal counsel, we must respectfully decline at this time

Respectfully,

On Behalf of the Board of Directors

PEPPERTREE PARK HOMEOWNERS ASSOCIATION

cc: Board of Directors

File