LEGEND

BASIN LIMITS

PROJECT BOUNDARY

BASIN ID

BASIN AREA

POC #

A-2 / 10.9

1

PRE-DEVELOPMENT HYDROLOGY

POINT OF COMPLIANCE

FIGURE 1

REVISIONS			
NO.	DESCRIPTION	DATE	APP'D

R·E·C Consultants, Inc.
Civil Engineering · Environmental
Land Surveying
2442 Second Avenue
San Diego, CA 92101
(619)232-9200 (619)232-9210 Fax

DATE: 08-08-13
SCALE: AS SHOWN
DRAWN: AP
CHECKED: AP

SHEET TITLE: PRE DEV POC
PROJECT: LAKE JENNINGS ROAD, LAKESIDE CA

SHEET 1 OF 2 SHEETS

SAVE DATE: 7/24/2015 – PLOT DATE: 2/25/2015 – FILE NAME: P:\Acad\68-LAKE JENNINGS\Civil\Reports\SWMP\SWMM\POC.dwg

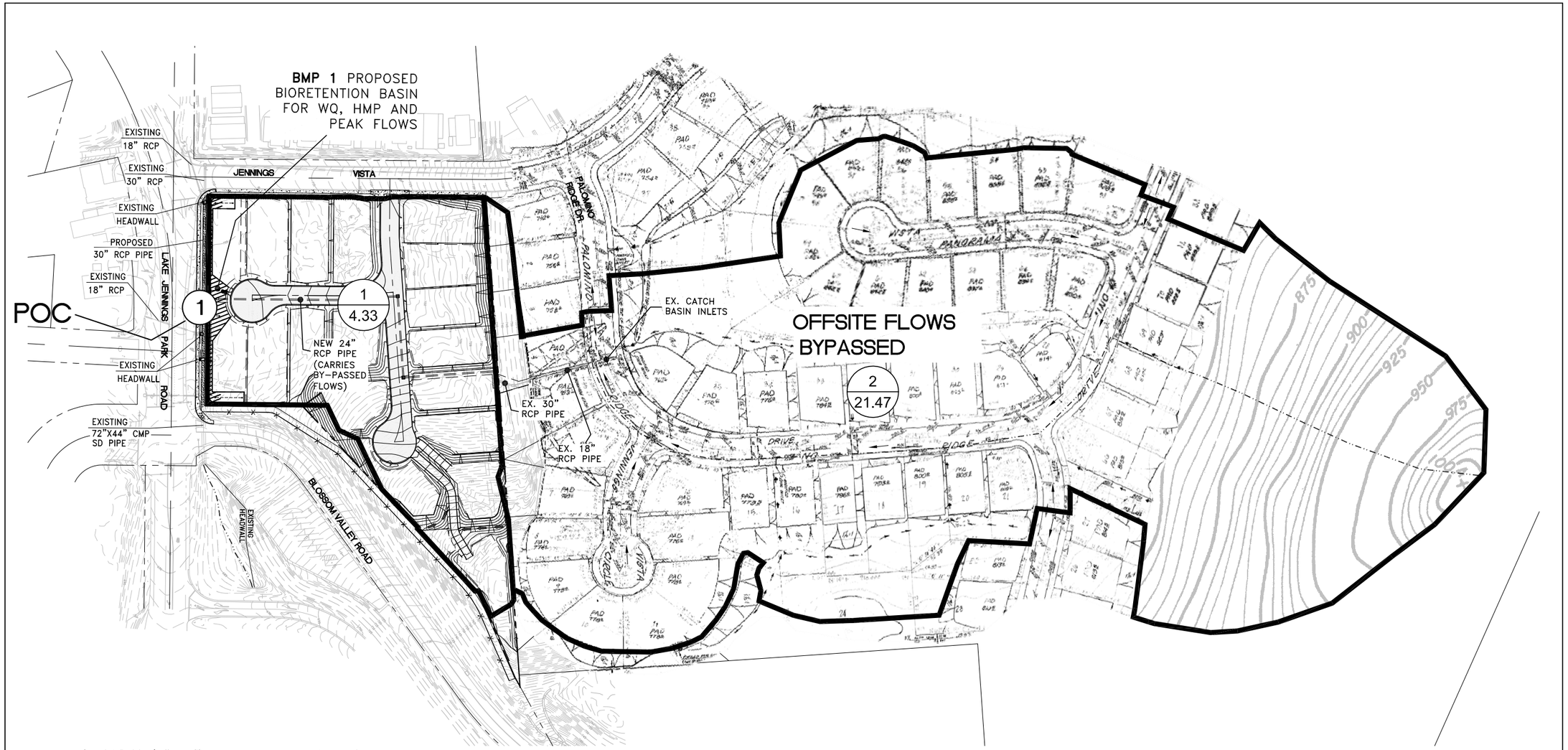

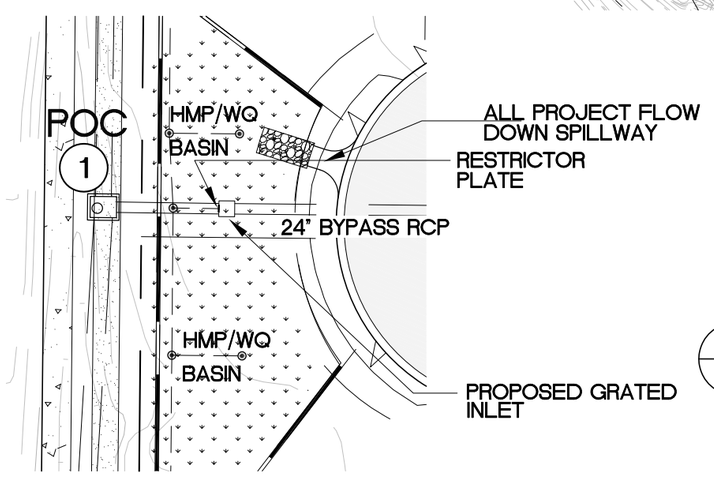

LEGEND

BASIN LIMITS

PROJECT BOUNDARY

BASIN AREA

POC #

A-2 / 10.9

1

POST-DEVELOPMENT HYDROLOGY

POINT OF COMPLIANCE

FIGURE 2

REVISIONS			
NO.	DESCRIPTION	DATE	APP'D

R·E·C Consultants, Inc.
Civil Engineering · Environmental
Land Surveying
2442 Second Avenue
San Diego, CA 92101
(619)232-9200 (619)232-9210 Fax

DATE: 06-12-14
SCALE: AS SHOWN
DRAWN: AP
CHECKED: AP

SHEET TITLE: POST DEV POC
PROJECT: LAKE JENNINGS ROAD, LAKESIDE CA

SHEET 1 OF 2 SHEETS

SAVE DATE: 2/24/2015 – PLOT DATE: 2/25/2015 – FILE NAME: P:\Acad\68-LAKE JENNINGS\Civil\Reports\SWMP\SWMM\POC PROPO.dwg

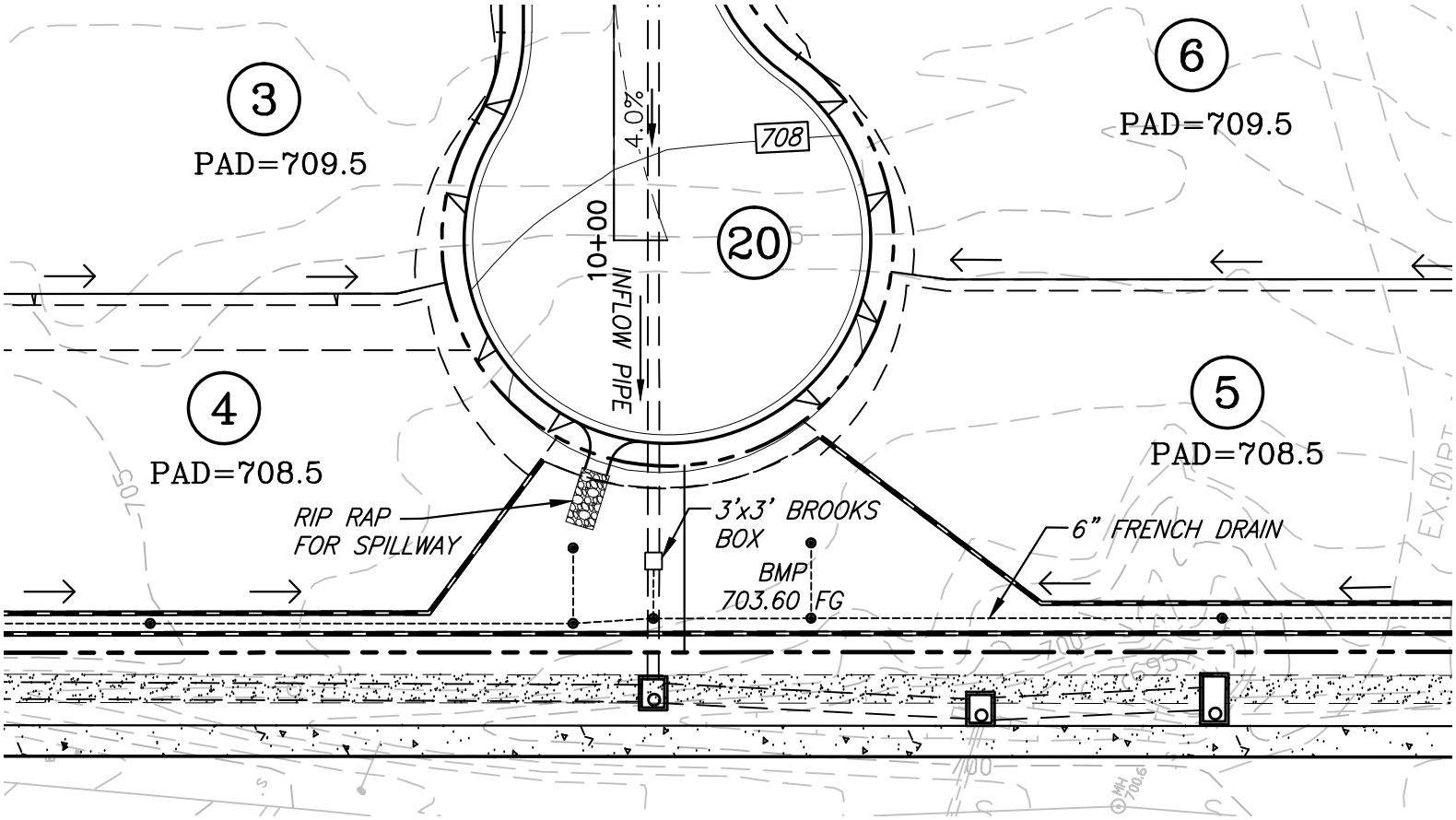

NOTE:
BROOKS BOX EXTERNAL
DIMENSIONS 4'x4'

SCALE: 1"= 30'

0 15 30 60 90

R·E·C Consultants, Inc.
Civil Engineering Environmental
Land Surveying
2442 Second Avenue
San Diego, CA 92101
(619)232-9200 (619)232-9210 Fax

SHEET 1 OF 3

SAVE DATE: 2/25/2015 ~ PLOT DATE: 2/25/2015 ~ FILE NAME: P:\Acad\681-LAKE JENNINGS\Civil\Reports\SWMP\BMP Exhibit sht 1.dwg

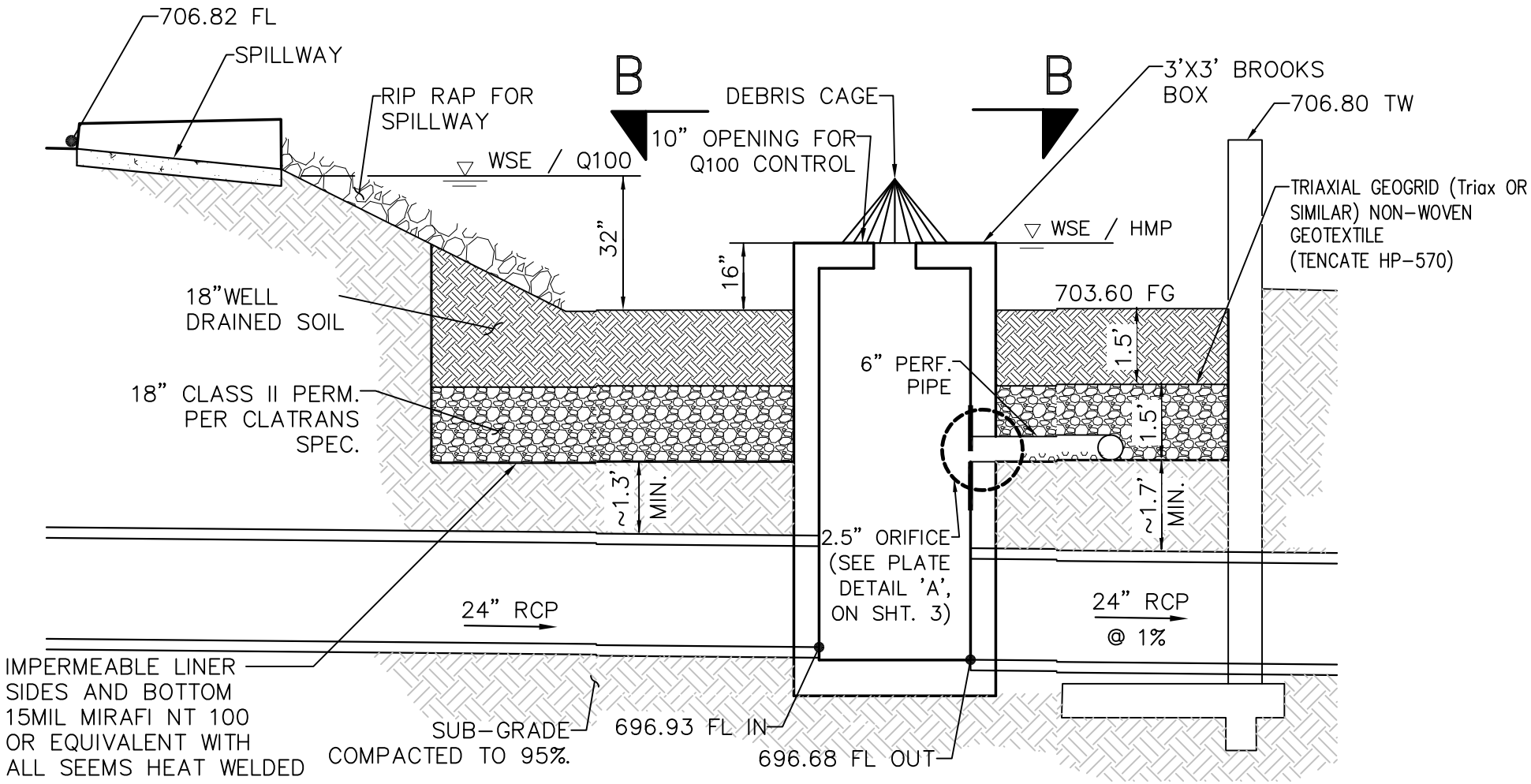

BIORETENTION ENGINEERED SOIL LAYER SHALL BE 85–88% SAND, 8–12% FINES (SILT & CLAY) 3–5% ORGANIC MATTER. PERCOLATION RATE 5–10in/hr MINIMUM SUSTAINED

BIORETENTION DETAIL FOR IMP

NTS

R·E·C Consultants, Inc.
Civil Engineering Environmental Land Surveying
2442 Second Avenue
San Diego, CA 92101
(619)232-9200 (619)232-9210 Fax

SAVE DATE: 2/25/2015 ~ PLOT DATE: 2/25/2015 ~ FILE NAME: P:\Acad\681-LAKE JENNINGS\Civil\Reports\SWMP\BMP Exhibit sht 2&3.dwg

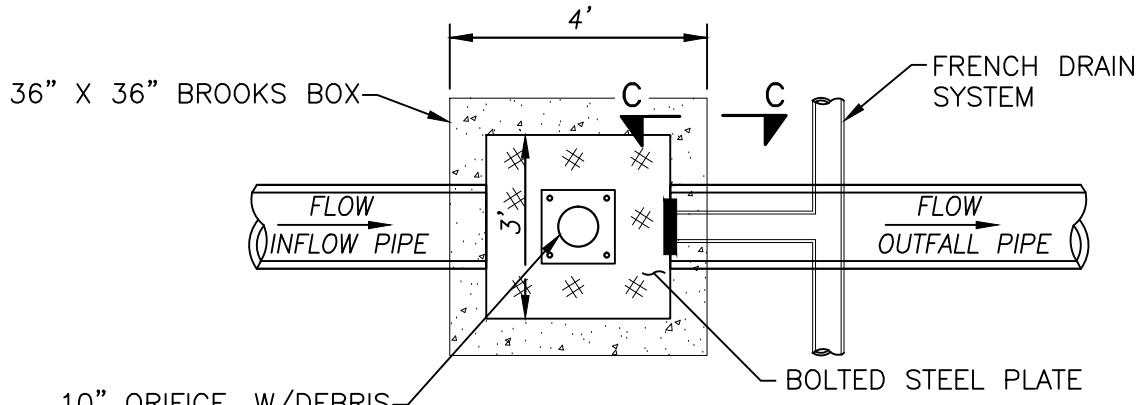

SECTION B–B
(N.T.S.)

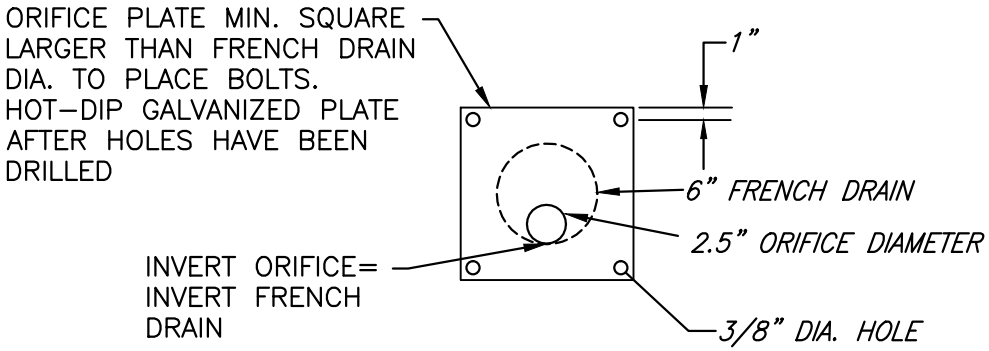

DETAIL 'A'
FLOW CONTROL ORIFICE PLATE

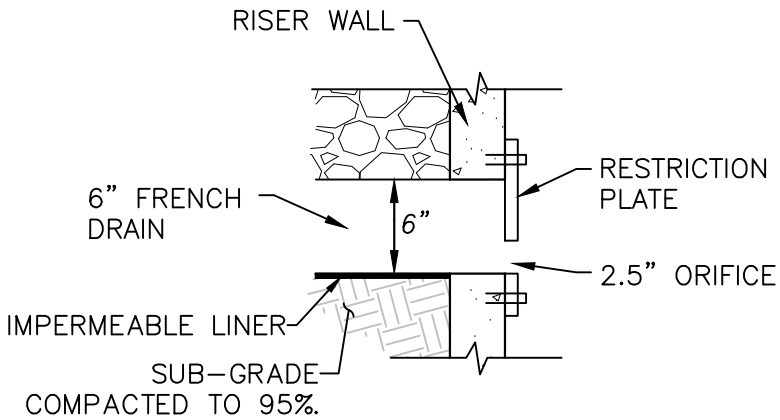

SECTION C–C
(N.T.S.)

R·E·C Consultants, Inc.
Civil Engineering Environmental
Land Surveying
2442 Second Avenue
San Diego, CA 92101
(619)232–9200 (619)232–9210 Fax

SAVE DATE: 2/25/2015 ~ PLOT DATE: 2/25/2015 ~ FILE NAME: P:\Acad\681–LAKE JENNINGS\Civil\Reports\SWMP\BMP Exhibit sht 2&3.dwg

http://uknow.brwncald.com/wastewater/MapOL.aspx

uKnow

File Edit View Favorites Tools Help

Brown AND Caldwell **uKnow** San Diego BMP Sizing Calculator (v3.0)

Home Contacts Legal Logout

Enter address - street, city... Find

Location | Raingauge | Rain Contours

Map data provided by OpenStreetMap

Map Details

Manage Basins

- San Diego County - HMP

Manage Map Layers

- Rain Gauges
- Mean Annual Rainfall
- Rain Basins
- Soil Type

Select a Tool

Toolkit: HydroMod Tools

Tool: Basin Manager

ATTACHMENT 6

SWMM Input Data in Input Format (Existing & Proposed Models)

LAKE JENNINGS – HMP MANAGEMENT WITH BIORETENTION – POC1. INPUT.

```
[TITLE]
LAKE JENNINGS - HMP MANAGEMENT WITH BIORETENTION - POC1

[OPTIONS]
FLOW_UNITS           CFS
INFILTRATION         GREEN_AMPT
FLOW_ROUTING         KINWAVE
START_DATE           08/29/1951
START_TIME           00:00:00
REPORT_START_DATE    08/29/1951
REPORT_START_TIME    00:00:00
END_DATE             05/23/2008
END_TIME             23:00:00
SWEEP_START          01/01
SWEEP_END            12/31
DRY_DAYS             0
REPORT_STEP          01:00:00
WET_STEP             00:15:00
DRY_STEP             04:00:00
ROUTING_STEP         0:01:00
ALLOW_PONDING        NO
INERTIAL_DAMPING     PARTIAL
VARIABLE_STEP        0.75
LENGTHENING_STEP     0
MIN_SURFAREA         0
NORMAL_FLOW_LIMITED  BOTH
SKIP_STEADY_STATE    NO
FORCE_MAIN_EQUATION  H-W
LINK_OFFSETS         DEPTH
MIN_SLOPE            0

[EVAPORATION]
;;Type       Parameters
;;---------- ----------
MONTHLY      .041   .076   .118   .192   .237   .318   .308   .286   .217   .140   .067   .041
DRY_ONLY     NO

[RAINGAGES]
;;               Rain      Time   Snow   Data
;;Name           Type      Intrvl Catch  Source
;;-------------- --------- ------ ------ ----------
OCEANSIDE        INTENSITY 1:00   1.0    TIMESERIES OCEANSIDE

[SUBCATCHMENTS]
;;                                                   Total    Pcnt.              Pcnt.    Curb     Snow
;;Name           Raingage         Outlet           Area     Imperv   Width    Slope    Length   Pack
;;-------------- ---------------- ---------------- -------- -------- -------- -------- -------- --------
;DMA 1
DMA_1            OCEANSIDE        BIORETENTION-1   4.2255   54.79    264      2        0
;BIORETENTION ON LOT
BIORETENTION-1   OCEANSIDE        OUT_POST-POC1    0.10445  0        20       0        0
;DMA A-1 PRE
PRE              OCEANSIDE        OUT-PRE-POC1     25.80    15       476      17.2     0
OFFSITEPOC1      OCEANSIDE        OUT_POST-POC1    21.47    18.0     412      16.5     0

[SUBAREAS]
;;Subcatchment   N-Imperv   N-Perv     S-Imperv   S-Perv     PctZero    RouteTo    PctRouted
;;-------------- ---------- ---------- ---------- ---------- ---------- ---------- ----------
DMA_1            .012       0.05       .02        .10        25         OUTLET
BIORETENTION-1   0.012      0.05       0.02       0.1        25         OUTLET
PRE              0.012      .05        0.02       0.1        25         OUTLET
OFFSITEPOC1      .012       0.05       .02        .10        25         OUTLET

[INFILTRATION]
;;Subcatchment   Suction    HydCon     IMDmax
;;-------------- ---------- ---------- ----------
DMA_1            6          0.075      0.31
BIORETENTION-1   6          0.075      0.31
PRE              6          0.075      0.31
OFFSITEPOC1      6          0.075      0.31



[LID_CONTROLS]
```

```
;;                Type/Layer Parameters
;;-------------- ---------- ----------
IMP1              BC
IMP1              SURFACE    16         0.05       0          0          5
IMP1              SOIL       18         0.4        0.2        0.1        5          5          1.5
IMP1              STORAGE    18         .67        0          0
IMP1              DRAIN      0.46486    0.5        0          6

[LID_USAGE]
;;Subcatchment   LID Process      Number  Area       Width      InitSatur  FromImprv  ToPerv     Report File
;;-------------- ---------------- ------- ---------- ---------- ---------- ---------- ---------- -----------
BIORETENTION-1   IMP1             1       4550       20         0          100        0

[OUTFALLS]
;;                Invert     Outfall    Stage/Table      Tide
;;Name           Elev.      Type       Time Series      Gate
;;-------------- ---------- ---------- ---------------- ----
OUT_POST-POC1    0          FREE                        NO
;OUTLET PREDE
OUT-PRE-POC1     0          FREE                        NO

[TIMESERIES]
;;Name           Date       Time       Value
;;-------------- ---------- ---------- ----------
OCEANSIDE        FILE "P:\Acad\855 Berryman Canyon\Reports\SWMP\SWMM\OsideRain.prn"

[REPORT]
INPUT      NO
CONTROLS   NO
SUBCATCHMENTS ALL
NODES ALL
LINKS ALL

[TAGS]

[MAP]
DIMENSIONS -197.262 291.023 417.877 790.168
Units      None

[COORDINATES]
;;Node           X-Coord            Y-Coord
;;-------------- ------------------ ------------------
OUT_POST-POC1    200.015            400.000
OUT-PRE-POC1     0.000              500.000

[VERTICES]
;;Link           X-Coord            Y-Coord
;;-------------- ------------------ ------------------

[Polygons]
;;Subcatchment   X-Coord            Y-Coord
;;-------------- ------------------ ------------------
DMA_1            200.000            700.000
BIORETENTION-1   200.000            500.000
PRE              0.000              700.000
OFFSITEPOC1      300.000            550.000

[SYMBOLS]
;;Gage           X-Coord            Y-Coord
;;-------------- ------------------ ------------------
OCEANSIDE        91.195             744.741
```

ATTACHMENT 7

EPA SWMM FIGURES AND EXPLANATIONS

Per the attached, the reader can see the screens associated with the EPA-SWMM Model in both pre-development and post-development conditions. Each portion, i.e., sub-catchments, outfalls, storage units, weir as a discharge, and outfalls (point of compliance), are also shown.

Variables for modeling are associated with typical recommended values by the EPA-SWMM model, typical values found in technical literature (such as Maidment's Handbook of Hydrology). Recommended values for the SWMM model have been attained from the interim Orange County criteria established for their SWMM calibration. Currently, no recommended values have been established by the San Diego County HMP Permit for the SWMM Model.

Soil characteristics of the existing soils were determined from the site specific geotechnical report.

Some values incorporated within the SWMM model have been determined from the professional experience of REC using conservative assumptions that have a tendency to increase the size of the needed BMP and also generate a long-term runoff as a percentage of rainfall similar to those measured in gage stations in Southern California by the USGS.

EXPLANATION OF SELECTED VARIABLES

Sub Catchment Areas:

Please refer to the attached diagrams that indicate the DMA and Bio-Retention BMPs (BMP) sub areas modeled within the project site at both the pre and post developed conditions draining to the POC.

Parameters for the pre- and post-developed models include soil type C as determined from the County of San Diego Hydrology Manual Soils Maps and site specific Natural Resources Conservation Service (NRCS) geologic review (attached at the end of this appendix). Suction head, conductivity and initial deficit corresponds to average values expected for these soils types, according to sources consulted, professional experience, and approximate values obtained by the interim Orange County modeling approach.

REC selected infiltration values, such that the percentage of total precipitation that becomes runoff, is realistic for the soil types and slightly smaller than measured values for Southern California watersheds.

Selection of a Kinematic Approach: As the continuous model is based on hourly rainfall, and the time of concentration for the pre-development and post-development conditions is significantly smaller than 60 minutes, precise routing of the flows through the impervious surfaces, the underdrain pipe system, and the discharge pipe was considered unnecessary. The truncation error of the precipitation into hourly steps is much more significant than the precise routing in a system where the time of concentration is much smaller than 1 hour.

Sub-catchment BMP:

The area of bio-retention must be equal to the area of the development tributary to the bioretention facility (area that drains into the bioretention, equal external area plus bio-retention itself). Five (5) decimal places were given regarding the areas of the bio-retention to insure that the area used by the program for the LID subroutine corresponds exactly with this tributary.

LID Control Editor: Explanation of Significant Variables

Storage Depth:

The storage depth variable within the SWMM model is representative of the storage volume provided beneath the engineered soil and mulch components of the bioretention facility.

Porosity: A porosity value of 0.4 has been selected for the model. The amended soil is to be highly sandy in content in order to have a saturated hydraulic conductivity of approximately 5 in/hr.

REC considers such a value to be slightly high; however, in order to comply with the HMP Permit, the value recommended by the Copermittees for the porosity of amended soil is 0.4, per Appendix A of the Final Hydromodification Management Plan by Brown & Caldwell, dated March 2011. Such porosity is equal to the porosity of the gravel per the same document.

Void Ratio: The ratio of the void volume divided by the soil volume is directly related to porosity as n/(1-n). As the underdrain layer is composed of gravel, a porosity value of 0.4 has been selected (also per Appendix A of the Final HMP document), which results in a void ratio of 0.4/(1-0.4) = 0.67 for the gravel detention layer.

Conductivity: Due to the natural soil existing on site, infiltration was a viable addition to the LID design. As the BMP is to be lined, the conductivity value was set to 0 to represent zero infiltration.

Clogging factor: A clogging factor was not used (0 indicates that there is not clogging assumed within the model). The reason for this is related to the fairness of a comparison with the SDHM model and the HMP sizing tables: a clogging factor was not considered, and instead, a conservative value of infiltration was recommended.

Drain (Flow) coefficient: The flow coefficient in the SWMM Model is the coefficient needed to transform the orifice equation into a general power law equation of the form:

$$q = C(H - H_D)^n \qquad (1)$$

where q is the peak flow in in/hr, n is the exponent (typically 0.5 for orifice equation), H_D is the elevation of the centroid of the orifice in inches (assumed equal to the invert of the orifice for small orifices and in our design equal to 0) and H is the depth of the water in inches.

The general orifice equation can be expressed as:

$$Q = \frac{\pi}{4} c_g \frac{D^2}{144} \sqrt{2g \frac{(H - H_D)}{12}} \qquad (2)$$

where Q is the peak flow in cfs, D is the diameter in inches, c_g is the typical discharge coefficient for orifices (0.61-0.63 for thin walls and around 0.75-0.8 for thick walls), g is the acceleration of gravity in ft/s^2, and H and H_D are defined above and are also used in inches in Equation (2).