# NETWORK VISION MMBTS LAUNCH

# IND REVE / ERICKSON PROPERTY

## SD03XC037

## MONOPOLE

6163 ALPINE BLVD.
ALPINE, CA 91901
SAN DIEGO COUNTY
LATITUDE: 32° 50' 11.111" N (32.83642)
LONGITUDE: 116° 40' 50.807" W (-116.68078)

## SAN DIEGO METRO MARKET

## SHEET INDEX


| SHEET | DESCRIPTION |
|---|---|
| T-1 | TITLE SHEET |
| T-2 | CONDITIONS OF APPROVAL LETTER |
| T-3 | CONDITIONS OF APPROVAL LETTER (1) |
| A-1 | SITE PLAN |
| A-2 | ENLARGED SITE PLAN |
| A-3 | EXISTING ENLARGED EQUIPMENT & ANTENNA PLAN |
| A-4 | PROPOSED ENLARGED EQUIPMENT & ANTENNA PLAN (2) |
| A-5 | EXISTING & PROPOSED NORTH ELEVATION |
| A-6 | EXISTING & PROPOSED EAST ELEVATION |
| A-7 | EXISTING & PROPOSED SOUTH ELEVATION |
| A-8 | EXISTING & PROPOSED WEST ELEVATION |
| A-9 | EQUIPMENT & DETAILS |
| A-10 | CONSTRUCTION DETAILS |
| A-11 | H-FRAME CALCULATION DETAIL |
| A-12 | CABLE COLOR CODING REQUIREMENTS |
| A-13 | CABLE COLOR CODING REQUIREMENTS |
| A-14 | CABLE COLOR CODING REQUIREMENTS |
| A-15 | CABLE COLOR CODING REQUIREMENTS |
| A-16 | PLUMBING DIAGRAMS |
| A-17 | PLUMBING DIAGRAMS |
| A-18 | PLUMBING DIAGRAMS |
| A-19 | PLUMBING DIAGRAMS |
| A-20 | PLUMBING DIAGRAMS |
| F-1 | FIBER PLAN |
| E-1 | SCHEMATIC GROUNDING PLAN |
| E-2 | GROUNDING DETAILS |


## CODE BLOCK

**CALIFORNIA STATE CODE COMPLIANCE:**

ALL WORK AND MATERIALS SHALL BE PERFORMED AND INSTALLED IN ACCORDANCE WITH THE CURRENT EDITIONS OF THE FOLLOWING CODES AS ADOPTED BY THE LOCAL GOVERNING AUTHORITIES. NOTHING IN THESE PLANS IS TO BE CONSTRUCTED TO PERMIT WORK NOT CONFORMING TO THESE CODES.

CALIFORNIA ADMINISTRATIVE CODE (INCL TITLE 24 & 25)
2010 CALIFORNIA BUILDING CODE
CITY/COUNTY ORDINANCES
BUILDING OFFICIALS & CODE ADMINISTRATORS (BOCA)
2010 MECHANICAL CALIFORNIA CODE
ANSI/EIA-222-F LIFE SAFETY CODE NFPA-91
2010 CALIFORNIA PLUMBING CODE
2010 CALIFORNIA ELECTRICAL CODE
2010 LOCAL BUILDING CODE

**ACCESSIBILITY REQUIREMENTS:**

FACILITY IS UNMANNED AND NOT FOR HUMAN HABITATION. HANDICAPPED ACCESS REQUIREMENTS ARE NOT REQUIRED IN ACCORDANCE WITH THE 2010 CALIFORNIA BUILDING CODE.

## VICINITY MAP

## PROJECT DESCRIPTION

SPRINT PROPOSES TO MODIFY AN EXISTING UNMANNED TELECOMMUNICATIONS FACILITY

- REMOVE (4) EXISTING SPRINT CDMA PANEL ANTENNAS
- INSTALL (2) NEW PANEL ANTENNAS
- INSTALL (2) NEW RRH UNITS
- REMOVE ALL EXISTING ANTENNA COAX
- INSTALL (3) NEW FIBER OPTIC CABLES USING EXISTING COAX ROUTE
- REMOVE EXISTING MODCELL 4.0 EQUIPMENT CABINET
- REMOVE EXISTING BATTERY EQUIPMENT CABINET
- REMOVE EXISTING POWER PLANT CABINET
- INSTALL (1) NEW 9928 EQUIPMENT CABINET
- INSTALL (1) NEW BBU CABINETS
- INSTALL (1) NEW JUNCTION BOX
- INSTALL (1) NEW AAV FIBER BOX WITH JUNCTION BOX
- EQUIPMENT IS LOCATED WITHIN EXISTING SPRINT EQUIPMENT COMPOUND

## PROJECT TEAM

**ARCHITECT:**
THOMAS R. HOLLAND, AIA
PACIFIC TELECOM SERVICES, LLC
3199C AIRPORT LOOP DRIVE
COSTA MESA, CA 92626
CONTACT: ROBERT LEIGHTON
PH: (206) 464-4402
EMAIL: RLEIGHTONG@PTSWA.COM

**STRUCTURAL ENGINEER:**
FLORIN ARSENE, PE
25442 BURNTWOOD
LAGUAN NIGUEL, CA 92677
PH: (949) 374-2405

**SITE ACQ PROJECT MANAGER:**
ALCATEL-LUCENT
CONTACT: ALEX TSATUROV
PH: (858) 320-3128

**CONSTRUCTION MANAGER:**
ALCATEL LUCENT SAN DIEGO
CONTACT: DILLON TERRY
PH: (619) 398-6199

**PLANNING & ZONING:**
CONTACT: MARK BERLIN
PH: (858) 922-0237

**LEASING:**
SAC WIRELESS LLC
CONTACT: MARY HAMILTON
PH: (858) 720-0166

**POWER COMPANY:**
SDG&E
PH: (800)-336-7343

**TELCO COMPANY:**
AT&T
CONTACT: BOB ROVERE
PH: (858) 268-6919

## SIGNATURE BLOCK

| APPROVAL | SIGNATURE | DATE |
|---|---|---|
| PROJECT MANAGER | | |
| CONSTRUCTION MANAGER | | |
| RF ENGINEER | | |
| SITE ACQUISITION | | |
| PLANNING CONSULTANT | | |
| PROPERTY OWNER | | |
| SPRINT REPRESENTATIVE | | |

## DRIVING DIRECTIONS

- FROM SAN DIEGO INTERNATIONAL AIRPORT, 3225 NORTH HARBOR DRIVE, SAN DIEGO, CA:

| | |
|---|---|
| HEAD SOUTH | 16 FT |
| TURN RIGHT TOWARD AIRPORT TERMINAL RD | 463 FT |
| SLIGHT LEFT ONTO AIRPORT TERMINAL RD | 0.2 MI |
| KEEP RIGHT AT THE FORK | 443 FT |
| TURN LEFT ONTO N HARBOR DR | 1.4 MI |
| TURN LEFT ONTO W GRAPE ST | 0.4 MI |
| TAKE THE INTERSTATE 5 S RAMP | 0.2 MI |
| MERGE ONTO I-5 S | 0.4 MI |
| TAKE EXIT 16 TO MERGE ONTO CA-163 N TOWARD ESCONDIDO | 2.9 MI |
| TAKE EXIT 3A TO MERGE ONTO I-8 E TOWARD EL CENTRO | 31.7 MI |
| TAKE EXIT 36 FOR E WILLOWS RD | 0.3 MI |
| TURN RIGHT ONTO WILLOWS RD | 203 FT |
| TURN LEFT ONTO ALPINE BLVD | |
| DESTINATION WILL BE ON THE RIGHT | 0.1 MI |

- ARRIVE AT 6163 ALPINE BLVD, ALPINE, CA 91901

## PROJECT SUMMARY

**APPLICANT:**
SAC WIRELESS ON BEHALF OF ALCATEL LUCENT/SPRINT/NEXTEL
CONTACT: MARY HAMILTON
OFFICE PH: (858) 720-0166

**PROPERTY INFORMATION:**
ERICKSON FAMILY TRUST 06-04-90
C/O FIRST AMERICAN TRUST
5 FIRST AMERICAN WAY
SANTA ANA, CA 92707

ZONING CLASSIFICATION: A-72 GENERAL AGRICULTURE
BUILDING CODE: 2010 CBC
CONSTRUCTION TYPE: TBD
OCCUPANCY: TBD
JURISDICTION: CITY OF SAN DIEGO
CURRENT USE: TELECOMMUNICATIONS FACILITY
PROPOSED USE: TELECOMMUNICATIONS FACILITY

**PARCEL NUMBER(S):** (1)
406-140-24&25

**LEASE AREA:**
500 SQ FT.

At all new services & grounding trenches, provive "WARNING" tape at 12" below grade.

DIG ALERT
"CALL BEFORE YOU DIG"
1-800-227-2600
UTILITY NOTIFICATION CENTER OF SOUTHERN CALIFORNIA

Sprint

Alcatel·Lucent

PTS
PACIFIC TELECOM SERVICES, LLC
3199C AIRPORT LOOP DRIVE
COSTA MESA, CA 92626

PROJECT INFORMATION:

NETWORK VISION MMBTS LAUNCH
IND REVE / ERICKSON PROPERTY
SD03XC037
6163 ALPINE BLVD.
ALPINE, CA 91901
SAN DIEGO COUNTY

ISSUE DATE:
05/14/13

ISSUED FOR:
CONSTRUCTION

REVISIONS

| REV. | DATE | DESCRIPTION | INITIALS |
|---|---|---|---|
| A | 01/02/12 | ISSUED FOR 90% CD REVIEW | HS |
| B | 02/16/12 | REVISED FOR 90% CD REVIEW | HS |
| 0 | 03/20/12 | ISSUED FOR CONSTRUCTION | CD |
| 1 | 08/31/12 | REVISED FOR FINAL CD'S | AF |
| 2 | 09/06/12 | REVISED FOR CONSTRUCTION | RLD |
| 3 | 11/06/12 | REVISED "1" PER JURISDICTION COMMENTS | RLD |
| 4 | 05/14/13 | REVISED "2" PER JURISDICTION COMMENTS | LEB |

NOT FOR CONSTRUCTION UNLESS LABELED AS CONSTRUCTION SET

LICENSURE:

SHEET TITLE:
TITLE SHEET

SHEET NUMBER: T-1
REVISION: 4

THE INFORMATION CONTAINED IN THIS SET OF CONSTRUCTION DOCUMENTS IS PROPRIETARY BY NATURE. ANY USE OR DISCLOSURE OTHER THAN THAT WHICH RELATES TO CARRIER SERVICES IS STRICTLY PROHIBITED.

MARK WARDLAW
Director

County of San Diego

PLANNING & DEVELOPMENT SERVICES

5510 OVERLAND AVENUE, SUITE 110, SAN DIEGO, CALIFORNIA 92123
INFORMATION (858) 694-2960
TOLL FREE (800) 411-0017
www.sdcounty.ca.gov/pds

September 26, 2012

Mark Berlin
SAC Wireless LLC
5865 Avenida Encinas, Ste 142B
Carlsbad, CA 92008

RE: PROJECT NAME: ERICKSON WIRELESS TELECOMMUNICATION FACILITY
MINOR USE PERMIT MODIFICATION 3401 96-013-01 (ZAP);
ENVIRONMENTAL LOG NO 3910 12-05-001 (ER); APPLICATION
AMENDMENT FORM/ADMINISTRATIVE FEES/DOCUMENT REQUEST;
PROJECT ADDRESS: 6163 Alpine Blvd, Alpine; APN 406-140-24 & 25; KIVA
PROJECT: 12-0185615

Dear Mark Berlin:

Planning & Development Services (PDS) has completed the review of your Application for the Wireless Telecommunication Facility and have found it to be adequate. However, prior to drafting the Minor Use Permit Modification decision which will include conditions that will need to be satisfied for your project, we request your concurrence with the project conditions. Please review the attached Application Amendment Form and, if you concur with the conditions, sign and return the original as soon as possible. It is recommended that you review these conditions closely as they cannot be changed after project approval. Your concurrence is being requested so that we may move forward with processing a CEQA Exemption for your project.

**NOTE: We strongly suggest that you review these measures carefully because changing them later may result in substantial costs and delays in the processing of your project.**

**DEPARTMENT RECOMMENDATION**
Comments and information in this letter, or lack thereof, should not be construed as the Department implying an overall recommendation or decision on your project. The Department of Planning and Development Services generally makes a final recommendation or decision to approve or deny a project when all planning analysis



and environmental documentation is complete and, if applicable, Alpine Planning Group input is received.

**MINOR COMMENTS**
The following minor comments were transmitted in the previous iteration letter or via telephone. Ensure the following revisions are incorporated into the final technical documents, prior to reproduction and submittal to PDS.

1. Please offer a few more photos/photosims of the project from various angles. Also try to keep the resolutions high, as it will be blown up for the Zoning Administration presentation.
2. On the cover sheet and A-1 of the plot plan, correct the APN to read 406-140-24 & 25.
3. Pages G-1 and G-2 can be omitted at this stage. They are not required until the Building Permit application.
4. Page A-4: the table in the upper right is difficult to read with the shading. Please remove the shading.
5. The outlined circles throughout the project with shading should have the shading removed for ease of reading. These circles provide the reader about which page to turn to for additional information. It is difficult to read the page number/item number. Again, remove the shading.

It has been determined that your project will rely on a previously adopted Negative Declaration. A County administrative fee of $50 dollars must be paid at the time of filing a NOE. The filing of a Notice of Exemption allows a project to be challenged for a period of 35 days. However, if the Notice of Exemption is not filed, this period is extended to 180 days. If the County Administrative Fee is not paid, the Notice of Exemption will not be filed. **Payment can be submitted to the cashier at the PDS office or directly to the County Clerk.**

**RECORDATION OF PERMIT**
Pursuant to the San Diego County Zoning Ordinance Section 7019, Permit Decisions for Administrative Permits, Density Bonus Permits, Site Plans, Use Permits, Variances, Reclamation Plans, or any modifications to these permits shall be recorded to provide constructive notice to all purchasers, transferees, or other successors to the interests of the owners named, of the rights and obligations created by this permit. The Recordation form, with Decision attached, will be provided immediately after the Decision determination for this project and must be signed, notarized and returned to PDS at the initiation of the Condition Satisfaction Process, or as otherwise specified. Once received, PDS staff shall have the document recorded at the County Recorder's Office.



**SUBMITTAL REQUIREMENTS**
Unless other agreements have been made with County staff, you must submit all of the following items concurrently and by the submittal date listed below in order to make adequate progress and to minimize the time and costs in the processing of your application. The submittal must be made to the PDS Zoning Counter at 5510 Overland Avenue, Suite 110, San Diego, CA 92123. For fastest service when submitting information requested in this letter, arrive at the PDS Zoning Counter between 8:00 a.m. and 10:00 a.m. Please note that all PDS Counters are closed daily from 11:45 a.m. through 12:30 p.m. Expect longer wait times before and after the lunchtime closure.

The submittal must include the following items:

1. A copy of this letter.
2.
2. The following information and/or document(s) with the requested number of copies as specified. All copies must be the latest version of the document and clean with all strike-out/underline text removed. Any maps or figures associated with a study must not exceed 11" x 17" (maximum). **The Project Number and Environmental Log Number must be clearly and visibly labeled on all submitted documents.**

| Information/Document | # of Copies | CD or Flash Drive with Word and PDF Doc | Lead Review/Section or Dept (For Admin Purposes Only) |
|---|---|---|---|
| Map/Plot Plan Exhibit (11 x 17" max.) **dated September 11, 2012.** | 6 | | Marisa Smith (6) Business Rule: Plot/Plan |
| Geographic Service Area | 1 | | Marisa Smith Business Rule: Miscellaneous |
| Letter of Authorization from Erickson Family Trust (Jeanne M. Erickson and Gaylord S. Ericson) | 1 | | Marisa Smith Business Rule: Legal |
| Proof of payment (i.e., receipt) of DF&G fees (Must pay fees by certified check or cashier's check to the Cashier) | 1 | | Marisa Smith Business Rule: Fish and Game Fees Receipt |
| Application Amendment Form signed and dated. | 1 | | Marisa Smith Business Rule: Application Amendment Form |
| **Updated photosims** | 1 | 1 PDF | Marisa Smith Business Rule: photos |



Please note that although no additional deposits are requested at this time, it may be required prior to the Zoning Administration Hearing. The project account will be monitored to ensure adequate funds are available.

**SUBMITTAL DUE DATE:** The Department requires that the Application Amendment Form (copies of documents and proof of payment of the Department of Fish and Game fees) requested in this letter be submitted by **November 7, 2012**. An extension of this date may be granted by the Director of Planning and Land Use upon submittal of a written request, signed and dated by the project applicant. The request must include the proposed revised timelines and a brief reasoning for the extension request.

The Department's goal is to help facilitate the efficient and timely processing of each application. If, however, a project becomes delayed due to excessive project inactivity or account deficit, Board Policy I-137 will apply; please refer to the Board Policy I-137 at http://www.sdcounty.ca.gov/PDS/docs/Inactive_Case_Board_Policy-11.3.09.pdf and the FAQ sheet at http://www.sdcounty.ca.gov/luegdocs/PDS%20FORMS/Cover%20Sheets/Zoning%20Forms/PDS-907_%20processing%20inactive_%20deficit%20projects.pdf for the Processing of Inactive and Deficit Projects.

If you have any questions or need additional information, please contact me at (858) 694-2621 or by e-mail at marisa.smith@sdcounty.ca.gov.

Sincerely,

Marisa Smith, Project Manager
Project Planning Division

JR:ms

Attachment
Estimate of Discretionary Processing Time and Costs

cc: Sprint/Nextel, c/o Alcatel Lucent, 9605 Scranton Rd, Ste 400, San Diego, CA 92121
Chris Nickerson, P.E., Pacific Telecom Services, LLC, 3199C Airport Loop Drive, Costa Mesa, CA 92625
Erickson Family Trust, c/o First American Trust, 5 First American Way, Santa Ana, CA 92707

email cc:
Jarrett Ramaiya, Planning Manager, PDS
Ed Sinsay, Team Leader, Land Development/Engineering, PDS

**ESTIMATE OF DISCRETIONARY PROCESSING TIME AND COSTS**

Project Name: Erickson Wireless Telecommunication Facility Minor Use Permit
Project Number: 3401 96-013-01
Staff Completing Schedule: Marisa Smith
Decision Making Body: Zoning Administrator
Date Schedule Produced/Revised: 9/27/2012

| TASK/ACTIVITY | Estimated Duration (Days) | Estimated Completion Date | Actual Completion Date |
|---|---|---|---|
| **APPLICATION SUBMITTAL** | | | |
| DPLU reviews project application "completeness", completes planning and environmental scoping | 14 | 9/25/2012 | 9/11/2012 |
| DPLU meets with applicant to discuss scoping letter, cost estimate and schedule | 10 | 10/8/2012 | 9/27/2017 |
| Applicant submits Environmental Initial Study and other technical studies per scoping letter requirements* | 30 | 11/7/2012 | |
| DPLU Reviews 1st Iteration Submittal | 30 | 12/7/2012 | |
| DPLU meets with applicant to discuss 1st iteration submittal* | 10 | 12/17/2012 | |
| Applicant Submits 2nd iteration submittal addressing DPLU comments* | 45 | 1/31/2013 | |
| DPLU Reviews 2nd Iteration Submittal | 21 | 2/21/2013 | |
| DPLU meets with applicant to resolve final project issues* | 30 | 3/21/2013 | |
| DPLU prepares project documentation, and Application Amendment Form (if applicable) | 21 | 4/11/2013 | |
| Applicant submits requested information (Application Amendment form, copies of plans, technical studies, etc.) | 14 | 4/25/2013 | |
| DPLU schedules Staff Hearing (consideration by the project & finalizes project documentation | 30 | 5/25/2013 | |
| DPLU schedules Planning Commission Hearing | 37 | 7/3/2013 | |
| DPLU Prepares Board Letter | 30 | 8/5/2013 | |
| Board of Supervisors Hearing | 35 | 9/9/2013 | |

**COST ESTIMATE SUMMARY**

| | |
|---|---|
| Total Discretionary Cost Estimate | $8,609 |
| Deposits/Fees Paid to Date | $7,585 |
| Account Balance | $4,270 |
| Estimated County Costs Remaining | $4,064 |
| Fee Estimate Revised/Complete | $50 |
| % Expended of Total Cost Estimate | 88.50% |

**PROJECT SCHEDULE ASSUMPTIONS**
Project description remains consistent throughout process
Applicant will submit information in accordance with schedule
The project will not be continued by decision maker or appealed
DPW, DEH, and DPR issues will be resolved concurrently
Bolded dates are under the control of applicant/consultant
* Task can be eliminated if earlier draft documents are satisfactory
Assumes 10 day review by County for completeness and 10 day review for each iteration
Dates are 10 days beyond an actual completion date due to weekends and holidays
Assuming deposit account balance remaining positive. County work may not proceed without adequate funds

**COST ESTIMATE ASSUMPTIONS**
Estimate is based on relative cost of projects of similar complexity
Estimate does not include applicant's consultant/engineering costs
Does not include County costs for past discretionary review (e.g. Final Map)
Cost assumes project schedule assumptions are met
Costs will be based on assumptions throughout the process
If project is delayed or changes, cost estimate will be revised
Estimate does not include additional deposits to DPW and DEH accounts made after the project application intake

APPLICATION AMENDMENT FORM

**PROJECT NAME:** Erickson Wireless Telecommunication Facility Minor Use Permit Modification

**CASE NUMBERS:** 3401 96-013-01 (ZAP), 3910 12-05-001 (ER)

I would like to amend my application for the above-listed project to include as part of the project proposal the following conditions of approval:

***ANY PERMIT:*** *(Prior to the approval of any plan, issuance of any permit, and prior to occupancy or use of the premises in reliance of this permit)*

1. **COST RECOVERY: [DPLU, DPW, DEH, DPR], [GP, CP, BP, UO]**
**Intent:** In order to comply with Section 362 of Article XX of the San Diego County Administrative Code, Schedule B.5, existing deficit accounts associated with processing this permit shall be paid. **Description of requirement:** The applicant shall pay off all existing deficit accounts associated with processing this permit. **Documentation:** The applicant shall provide a receipt to the Department of Planning and Land Use, Zoning Counter, which shows that all discretionary deposit accounts have been paid. No permit can be issued if there are deficit deposit accounts. **Timing:** Prior to the approval of any plan and prior to the issuance of any permit and prior to use in reliance of this permit, all fees and discretionary deposit accounts shall be paid. **Monitoring:** The DPLU Zoning Counter shall review the receipts and verify that all DPLU, DPW, DEH, and DPR deposit accounts have been paid.

2. **RECORDATION OF DECISION: [DPLU], [GP, CP, BP, UO]**
**Intent:** In order to comply with Section 7019 of the Zoning Ordinance, the Permit Decision shall be recorded to provide constructive notice to all purchasers, transferees, or other successors to the interests of the owners named, of the rights and obligations created by this permit. **Description of requirement:** The applicant shall sign, notarize with an 'all purpose acknowledgement' and return the original Recordation Form to DPLU. **Documentation:** Signed and notarized original Recordation Form. **Timing:** Prior to the approval of any plan and prior to the issuance of any permit and prior to use in reliance of this permit, a signed and notarized copy of the Decision shall be recorded by DPLU at the County Recorder's Office. **Monitoring:** The DPLU Zoning Counter shall verify that the Decision was recorded and that a copy of the recorded document is on file at DPLU.

***OCCUPANCY:*** *(Prior to any occupancy, final grading release, or use of the premises in reliance of this permit)*

Sprint

Alcatel·Lucent

PTS
PACIFIC TELECOM SERVICES, LLC
3199C AIRPORT LOOP DRIVE
COSTA MESA, CA 92626

PROJECT INFORMATION:

NETWORK VISION MMBTS LAUNCH
IND REVE / ERICKSON PROPERTY
SD03XC037
6163 ALPINE BLVD.
ALPINE, CA 91901
SAN DIEGO COUNTY

ISSUE DATE:
05/14/13

ISSUED FOR:
CONSTRUCTION

REVISIONS

| REV. | DATE | DESCRIPTION | INITIALS |
|---|---|---|---|
| A | 01/02/12 | ISSUED FOR 90% CD REVIEW | HS |
| B | 02/16/12 | REVISED FOR 90% CD REVIEW | HS |
| 0 | 03/20/12 | ISSUED FOR CONSTRUCTION | CD |
| 1 | 08/31/12 | REVISED FOR FINAL CD'S | AF |
| 2 | 09/06/12 | REVISED FOR CONSTRUCTION | RLD |
| 3 | 11/06/12 | REVISED "1" PER JURISDICTION COMMENTS | RLD |
| 4 | 05/14/13 | REVISED "2" PER JURISDICTION COMMENTS | LEB |

NOT FOR CONSTRUCTION UNLESS LABELED AS CONSTRUCTION SET

LICENSURE:

SHEET TITLE:
CONDITIONS OF APPROVAL LETTER

SHEET NUMBER: T-2 1
REVISION: 4

THE INFORMATION CONTAINED IN THIS SET OF CONSTRUCTION DOCUMENTS IS PROPRIETARY BY NATURE. ANY USE OR DISCLOSURE OTHER THAN THAT WHICH RELATES TO CARRIER SERVICES IS STRICTLY PROHIBITED.

3. **PHOTO SIMULATION: [DPLU, PCC] [UO, FG] [DPLU, FEE]**
**INTENT:** In order to verify that the site complies with the County Zoning Ordinance Section 6980 through 6991 (Wireless Telecommunications Section), the site shall substantially comply with the approved plot plans and photo-simulations. **DESCRIPTION OF REQUIREMENT:** The site shall be built to substantially comply with the approved photo-simulations dated September 11, 2012 to ensure that the site was built to be screened from public view.

**DOCUMENTATION:** The applicant shall build the site to comply with the approved plans and the photo-simulations. Upon completion, the applicant shall provide the photographic evidence to the [*DPLU, PCC*] for review. **TIMING:** Prior to any occupancy, final grading release, or use of the premises in reliance of this permit, the site shall be built to match the approval. **MONITORING:** The [*DPLU, PCC*] shall review the provided photos for compliance with this condition and compliance with the photo-simulations.

4. **INSPECTION FEE: [DPLU, ZONING][DPLU, PCO] [UO][DPR, TC, PP].**
**Intent:** In order to comply with Zoning Ordinance Section 7362.e the Discretionary Inspection Fee shall be paid. **Description of Requirement:** Pay the Discretionary Permit Inspection Fee at the *[DPLU, Zoning Counter]* and schedule an appointment for a follow up inspection with the County Permit Compliance Officer to review the on-going conditions associated with this permit. The inspection shall be scheduled no later than the six months subsequent to establishing the intended use of the permit. **Documentation:** The applicant shall provide a receipt showing that the inspection fee has been paid. The applicant shall also schedule the follow up inspection with the [*DPLU, PCC*]. **Timing:** Prior to any occupancy, final grading release, or use of the premises in reliance of this permit. **Monitoring:** The *[DPLU, Zoning Counter]* shall process an invoice and collect the fee for the Use Permit Compliance Inspection Fee. Upon collection of the fee, an inspection milestone shall be entered to schedule an inspection six months from the date that occupancy or use of the site was established. The permittee contact information shall be updated in the County permit tracking system, and the *[DPLU, Permit Compliance Officer]* should be notified. The *[DPLU, Permit Compliance Officer* shall contact the permittee and schedule the initial inspection.

5. **SITE PLAN IMPLEMENTATION: [DPLU, BI] [UO] [DPR, TC, PP].**
**Intent:** In order to comply with the approved project design indicated on the approved plot plan, the project shall be constructed as indicated on the approved building and construction plans. **Description of Requirement:** The site shall conform to the approved Minor Use Permit Modification plot plan and the building plans. This includes, but is not limited to: improving all parking areas and driveways, installing all required design features, painting all structures with



the approved colors, required and approved signage is installed and located properly, and all temporary construction facilities have been removed from the site. **Documentation:** The applicant shall ensure that the site conforms to the approved plot plan and building plans. **Timing:** Prior to any occupancy, final grading release, or use of the premises in reliance of this permit, the site shall conform to the approved plans. **Monitoring:** The *[DPLU, Building Inspector]* and DPR [TC, PP] shall inspect the site for compliance with the approved Building Plans.

***ONGOING:*** *(Upon establishment of use The following conditions shall apply during the term of this permit).*

6. **SITE CONFORMANCE: [DPLU, PCO] [OG] [DPR, TC, PP].**
**Intent:** In order to comply with Zoning Ordinance Section 7703, the site shall substantially comply with the approved plot plans and all deviations thereof, specific conditions and approved building plans. **Description of Requirement:** The project shall conform to the approved landscape plan(s), building plans, and plot plan(s). This includes, but is not limited to maintaining the following: all parking and driveways areas, watering all landscaping at all times, painting all necessary aesthetics design features, and installing all lighting, walls/fencing and required signage. Failure to conform to the approved plot plan(s); is an unlawful use of the land, and will result in enforcement action pursuant to Zoning Ordinance Section 7703. **Documentation:** The property owner and permittee shall conform to the approved plot plan. If the permittee or property owner chooses to change the site design in any away, they must obtain approval from the County for a Minor Deviation or a Modification pursuant to the County of San Diego Zoning Ordinance. **Timing:** Upon establishment of the use, this condition shall apply for the duration of the term of this permit. **Monitoring:** The *[DPLU, Code Enforcement Division]* is responsible for enforcement of this permit.

7. **PRIVATE ROAD MAINTENANCE: [DPLU, CODES] [BP, IP, GP, UO]. INTENT:** In order to ensure that the on and offsite private roads are maintained and not damaged during construction and during the term of the permit, the applicant shall assume responsibility. **DESCRIPTION OF REQUIREMENT:** The applicant is responsible for the repair of any damage caused by this Project during construction and the term of this permit to on-site and off-site private roads that serve the Project. Furthermore, the applicant is responsible for maintenance on a proportional basis (number of trips) during the term of this permit to on-site and off-site private roads that serve the Project. **DOCUMENTATION:** The applicant shall assume responsibility pursuant to this condition. **TIMING:** Upon establishment of use, this condition shall apply during the term of this permit. **MONITORING:** The [*DPLU, Code Enforcement Division*] is responsible for enforcement of this permit.



8. **SITE CONFORMANCE: [DPLU, PCO] [OG].**
**INTENT:** In order to comply with the County Zoning Ordinance Section 6980 through 6991 (Wireless Telecommunications Section), the site shall substantially comply with the requirements of this condition. **DESCRIPTION OF REQUIREMENT:** The project shall conform to the following requirements. This includes, but is not limited to maintaining the following:

a. Maintain the appearance of the facility, surrounding trees, landscaping, and associated equipment shelter, as depicted in the approved photo simulations.

b. All graffiti on any components of the facility shall be removed promptly in accordance with County regulations. Graffiti on any facility in the public right-of-way must be removed within 48 hours of notification.

c. All wireless telecommunications sites including antennae and cabinets shall be kept clean and free of litter, display a legible operator's contact number for reporting maintenance problems, and be secured to prohibit unauthorized access.

d. Wireless telecommunications facilities with use discontinued shall be considered abandoned 90 days following the final day of use. All abandoned facilities shall be physically removed by the facility owner no more than 90 days following the final day of use or determination that the facility has been abandoned, whichever occurs first. All wireless carriers who intend to abandon or discontinue the use of any wireless telecommunications facility shall notify the County of such intention no less than 60 days before the final day of use. The County reserves the right to remove any facilities that are abandoned for more than 90 days at the expense of the facility owner. Any abandoned site shall be restored to its natural or former condition. Grading and landscaping in good condition may remain.

**DOCUMENTATION:** The property owner and applicant shall conform to the ongoing requirements of this condition. Failure to conform to the approved plot plan(s); is an unlawful use of the land, and will result in enforcement action pursuant to Zoning Ordinance Section 7703. **TIMING:** Upon establishment of the use, this condition shall apply for the duration of the term of this permit. **MONITORING:** The *[DPLU, Code Enforcement Division]* is responsible for enforcement of this permit.



The undersigned, as the individual(s) with legal authority to fully represent the above-referenced project, concur with the inclusion of the above-listed amendments as conditions of approval of the referenced project.

By: _____ Date _____

_____ (Print Name and Title)

Sprint

Alcatel·Lucent

PTS
PACIFIC TELECOM SERVICES, LLC
3199C AIRPORT LOOP DRIVE
COSTA MESA, CA 92626

PROJECT INFORMATION:

NETWORK VISION MMBTS LAUNCH

IND REVE / ERICKSON PROPERTY
SD03XC037
6163 ALPINE BLVD.
ALPINE, CA 91901
SAN DIEGO COUNTY

ISSUE DATE:

05/14/13

ISSUED FOR:

CONSTRUCTION

REVISIONS

| REV. | DATE | DESCRIPTION | INITIALS |
|---|---|---|---|
| A | 01/02/12 | ISSUED FOR 90% CD REVIEW | HS |
| B | 02/16/12 | REVISED FOR 90% CD REVIEW | HS |
| 0 | 03/20/12 | ISSUED FOR CONSTRUCTION | CD |
| 1 | 08/31/12 | REVISED FOR FINAL CD'S | AF |
| 2 | 09/06/12 | REVISED FOR CONSTRUCTION | RLD |
| 3 | 11/06/12 | REVISED "1" PER JURISDICTION COMMENTS | RLD |
| 4 | 05/14/13 | REVISED "2" PER JURISDICTION COMMENTS | LEB |

NOT FOR CONSTRUCTION UNLESS LABELED AS CONSTRUCTION SET

LICENSURE:

SHEET TITLE:

CONDITIONS OF APPROVAL LETTER

SHEET NUMBER: T-3 1

REVISION: 4

THE INFORMATION CONTAINED IN THIS SET OF CONSTRUCTION DOCUMENTS IS PROPRIETARY BY NATURE. ANY USE OR DISCLOSURE OTHER THAN THAT WHICH RELATES TO CARRIER SERVICES IS STRICTLY PROHIBITED.

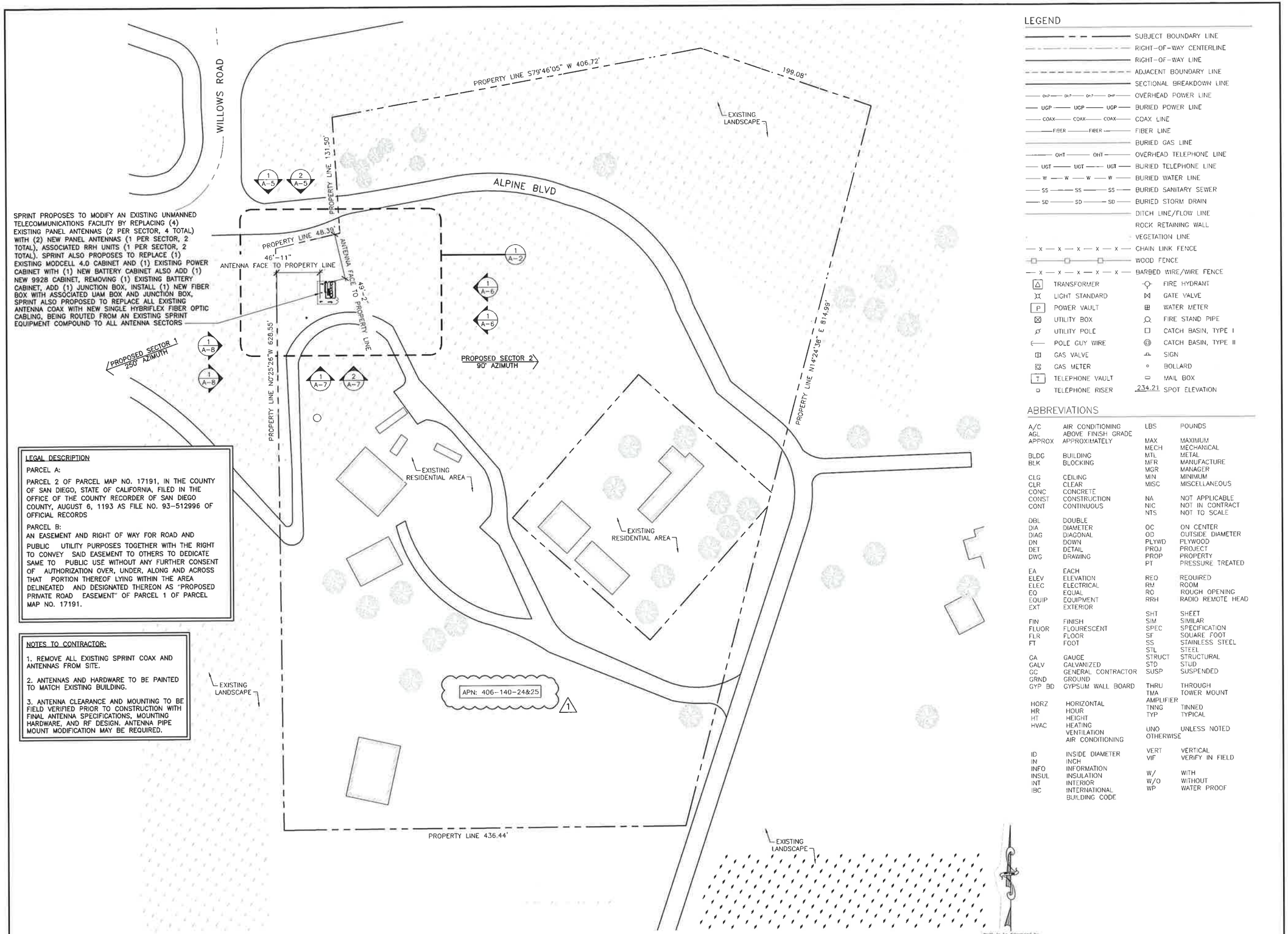


**LEGAL DESCRIPTION**

PARCEL A:

PARCEL 2 OF PARCEL MAP NO. 17191, IN THE COUNTY OF SAN DIEGO, STATE OF CALIFORNIA, FILED IN THE OFFICE OF THE COUNTY RECORDER OF SAN DIEGO COUNTY, AUGUST 6, 1193 AS FILE NO. 93-512996 OF OFFICIAL RECORDS

PARCEL B:

AN EASEMENT AND RIGHT OF WAY FOR ROAD AND PUBLIC UTILITY PURPOSES TOGETHER WITH THE RIGHT TO CONVEY SAID EASEMENT TO OTHERS TO DEDICATE SAME TO PUBLIC USE WITHOUT ANY FURTHER CONSENT OF AUTHORIZATION OVER, UNDER, ALONG AND ACROSS THAT PORTION THEREOF LYING WITHIN THE AREA DELINEATED AND DESIGNATED THEREON AS "PROPOSED PRIVATE ROAD EASEMENT" OF PARCEL 1 OF PARCEL MAP NO. 17191.

**NOTES TO CONTRACTOR:**

1. REMOVE ALL EXISTING SPRINT COAX AND ANTENNAS FROM SITE.
2. ANTENNAS AND HARDWARE TO BE PAINTED TO MATCH EXISTING BUILDING.
3. ANTENNA CLEARANCE AND MOUNTING TO BE FIELD VERIFIED PRIOR TO CONSTRUCTION WITH FINAL ANTENNA SPECIFICATIONS, MOUNTING HARDWARE, AND RF DESIGN. ANTENNA PIPE MOUNT MODIFICATION MAY BE REQUIRED.

## LEGEND

SUBJECT BOUNDARY LINE
RIGHT-OF-WAY CENTERLINE
RIGHT-OF-WAY LINE
ADJACENT BOUNDARY LINE
SECTIONAL BREAKDOWN LINE
OHP — OVERHEAD POWER LINE
UGP — BURIED POWER LINE
COAX — COAX LINE
FIBER — FIBER LINE
BURIED GAS LINE
OHT — OVERHEAD TELEPHONE LINE
UGT — BURIED TELEPHONE LINE
W — BURIED WATER LINE
SS — BURIED SANITARY SEWER
SD — BURIED STORM DRAIN
DITCH LINE/FLOW LINE
ROCK RETAINING WALL
VEGETATION LINE
X — CHAIN LINK FENCE
WOOD FENCE
X — BARBED WIRE/WIRE FENCE

TRANSFORMER
LIGHT STANDARD
P — POWER VAULT
UTILITY BOX
UTILITY POLE
POLE GUY WIRE
GAS VALVE
GAS METER
T — TELEPHONE VAULT
TELEPHONE RISER
FIRE HYDRANT
GATE VALVE
WATER METER
FIRE STAND PIPE
CATCH BASIN, TYPE I
CATCH BASIN, TYPE II
SIGN
BOLLARD
MAIL BOX
234.21 — SPOT ELEVATION

## ABBREVIATIONS

| | |
|---|---|
| A/C | AIR CONDITIONING |
| AGL | ABOVE FINISH GRADE |
| APPROX | APPROXIMATELY |
| BLDG | BUILDING |
| BLK | BLOCKING |
| CLG | CEILING |
| CLR | CLEAR |
| CONC | CONCRETE |
| CONST | CONSTRUCTION |
| CONT | CONTINUOUS |
| DBL | DOUBLE |
| DIA | DIAMETER |
| DIAG | DIAGONAL |
| DN | DOWN |
| DET | DETAIL |
| DWG | DRAWING |
| EA | EACH |
| ELEV | ELEVATION |
| ELEC | ELECTRICAL |
| EQ | EQUAL |
| EQUIP | EQUIPMENT |
| EXT | EXTERIOR |
| FIN | FINISH |
| FLUOR | FLOURESCENT |
| FLR | FLOOR |
| FT | FOOT |
| GA | GAUGE |
| GALV | GALVANIZED |
| GC | GENERAL CONTRACTOR |
| GRND | GROUND |
| GYP BD | GYPSUM WALL BOARD |
| HORZ | HORIZONTAL |
| HR | HOUR |
| HT | HEIGHT |
| HVAC | HEATING VENTILATION AIR CONDITIONING |
| ID | INSIDE DIAMETER |
| IN | INCH |
| INFO | INFORMATION |
| INSUL | INSULATION |
| INT | INTERIOR |
| IBC | INTERNATIONAL BUILDING CODE |
| LBS | POUNDS |
| MAX | MAXIMUM |
| MECH | MECHANICAL |
| MTL | METAL |
| MFR | MANUFACTURE |
| MGR | MANAGER |
| MIN | MINIMUM |
| MISC | MISCELLANEOUS |
| NA | NOT APPLICABLE |
| NIC | NOT IN CONTRACT |
| NTS | NOT TO SCALE |
| OC | ON CENTER |
| OD | OUTSIDE DIAMETER |
| PLYWD | PLYWOOD |
| PROJ | PROJECT |
| PROP | PROPERTY |
| PT | PRESSURE TREATED |
| REQ | REQUIRED |
| RM | ROOM |
| RO | ROUGH OPENING |
| RRH | RADIO REMOTE HEAD |
| SHT | SHEET |
| SIM | SIMILAR |
| SPEC | SPECIFICATION |
| SF | SQUARE FOOT |
| SS | STAINLESS STEEL |
| STL | STEEL |
| STRUCT | STRUCTURAL |
| STD | STUD |
| SUSP | SUSPENDED |
| THRU | THROUGH |
| TMA | TOWER MOUNT AMPLIFIER |
| TNNG | TINNED |
| TYP | TYPICAL |
| UNO | UNLESS NOTED OTHERWISE |
| VERT | VERTICAL |
| VIF | VERIFY IN FIELD |
| W/ | WITH |
| W/O | WITHOUT |
| WP | WATER PROOF |

24"x36" SCALE: 1" = 50'-0"
11"x17" SCALE: 1" = 100'-0"
50' 25' 0' 50'

SITE PLAN 1

THE INFORMATION CONTAINED IN THIS SET OF CONSTRUCTION DOCUMENTS IS PROPRIETARY BY NATURE. ANY USE OR DISCLOSURE OTHER THAN THAT WHICH RELATES TO CARRIER SERVICES IS STRICTLY PROHIBITED.

Sprint

Alcatel·Lucent

PTS
PACIFIC TELECOM SERVICES, LLC
3199C AIRPORT LOOP DRIVE
COSTA MESA, CA 92626

PROJECT INFORMATION:

NETWORK VISION MMBTS LAUNCH

# IND REVE / ERICKSON PROPERTY

SD03XC037

6163 ALPINE BLVD.
ALPINE, CA 91901
SAN DIEGO COUNTY

ISSUE DATE:

05/14/13

ISSUED FOR:

CONSTRUCTION

REVISIONS

| REV. | DATE | DESCRIPTION | INITIALS |
|---|---|---|---|
| A | 01/02/12 | ISSUED FOR 90% CD REVIEW | HS |
| B | 02/16/12 | REVISED FOR 90% CD REVIEW | HS |
| 0 | 03/20/12 | ISSUED FOR CONSTRUCTION | CD |
| 1 | 08/31/12 | REVISED FOR FINAL CD'S | AF |
| 2 | 09/06/12 | REVISED FOR CONSTRUCTION | RLD |
| 3 | 11/06/12 | REVISED "1" PER JURISDICTION COMMENTS | RLD |
| 4 | 05/14/13 | REVISED "2" PER JURISDICTION COMMENTS | LEB |

NOT FOR CONSTRUCTION UNLESS LABELED AS CONSTRUCTION SET

LICENSURE:

SHEET TITLE:

SITE PLAN

SHEET NUMBER: A-1

REVISION: 4

NOTES TO CONTRACTOR:

1. REMOVE ALL EXISTING SPRINT COAX AND ANTENNAS FROM SITE.

2. ANTENNAS AND HARDWARE TO BE PAINTED TO MATCH EXISTING BUILDING.

3. ANTENNA CLEARANCE AND MOUNTING TO BE FIELD VERIFIED PRIOR TO CONSTRUCTION WITH FINAL ANTENNA SPECIFICATIONS, MOUNTING HARDWARE, AND RF DESIGN. ANTENNA PIPE MOUNT MODIFICATION MAY BE REQUIRED.

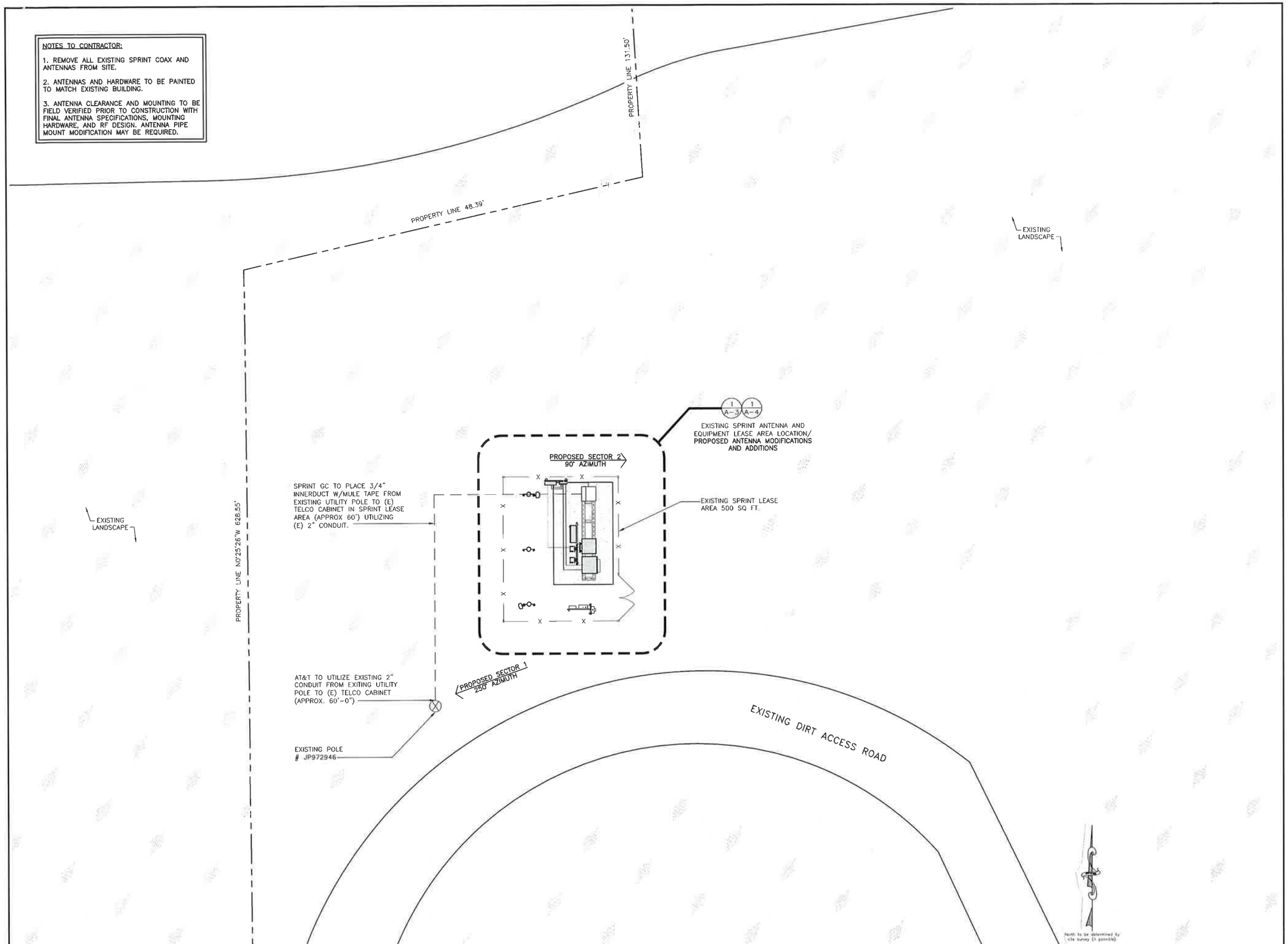


24"x36" SCALE: 1/8" = 1'-0"
11"x17" SCALE: 1/16" = 1'-0"
8' 6' 4' 2' 0' 8'

ENLARGED SITE PLAN | 1

THE INFORMATION CONTAINED IN THIS SET OF CONSTRUCTION DOCUMENTS IS PROPRIETARY BY NATURE. ANY USE OR DISCLOSURE OTHER THAN THAT WHICH RELATES TO CARRIER SERVICES IS STRICTLY PROHIBITED.

Sprint

Alcatel·Lucent

PTS
PACIFIC TELECOM SERVICES, LLC
3199C AIRPORT LOOP DRIVE
COSTA MESA, CA 92626

PROJECT INFORMATION:

NETWORK VISION MMBTS LAUNCH

# IND REVE / ERICKSON PROPERTY

SD03XC037

6163 ALPINE BLVD.
ALPINE, CA 91901
SAN DIEGO COUNTY

ISSUE DATE:

05/14/13

ISSUED FOR:

CONSTRUCTION

REVISIONS

| REV. | DATE | DESCRIPTION | INITIALS |
|---|---|---|---|
| A | 01/02/12 | ISSUED FOR 90% CD REVIEW | HS |
| B | 02/16/12 | REVISED FOR 90% CD REVIEW | HS |
| 0 | 03/20/12 | ISSUED FOR CONSTRUCTION | CD |
| 1 | 08/31/12 | REVISED FOR FINAL CD'S | AF |
| 2 | 09/06/12 | REVISED FOR CONSTRUCTION | RLD |
| 3 | 11/06/12 | REVISED "1" PER JURISDICTION COMMENTS | RLD |
| 4 | 05/14/13 | REVISED "2" PER JURISDICTION COMMENTS | LEB |

NOT FOR CONSTRUCTION UNLESS LABELED AS CONSTRUCTION SET

LICENSURE:

SHEET TITLE:

ENLARGED SITE PLAN

SHEET NUMBER: A-2

REVISION: 4

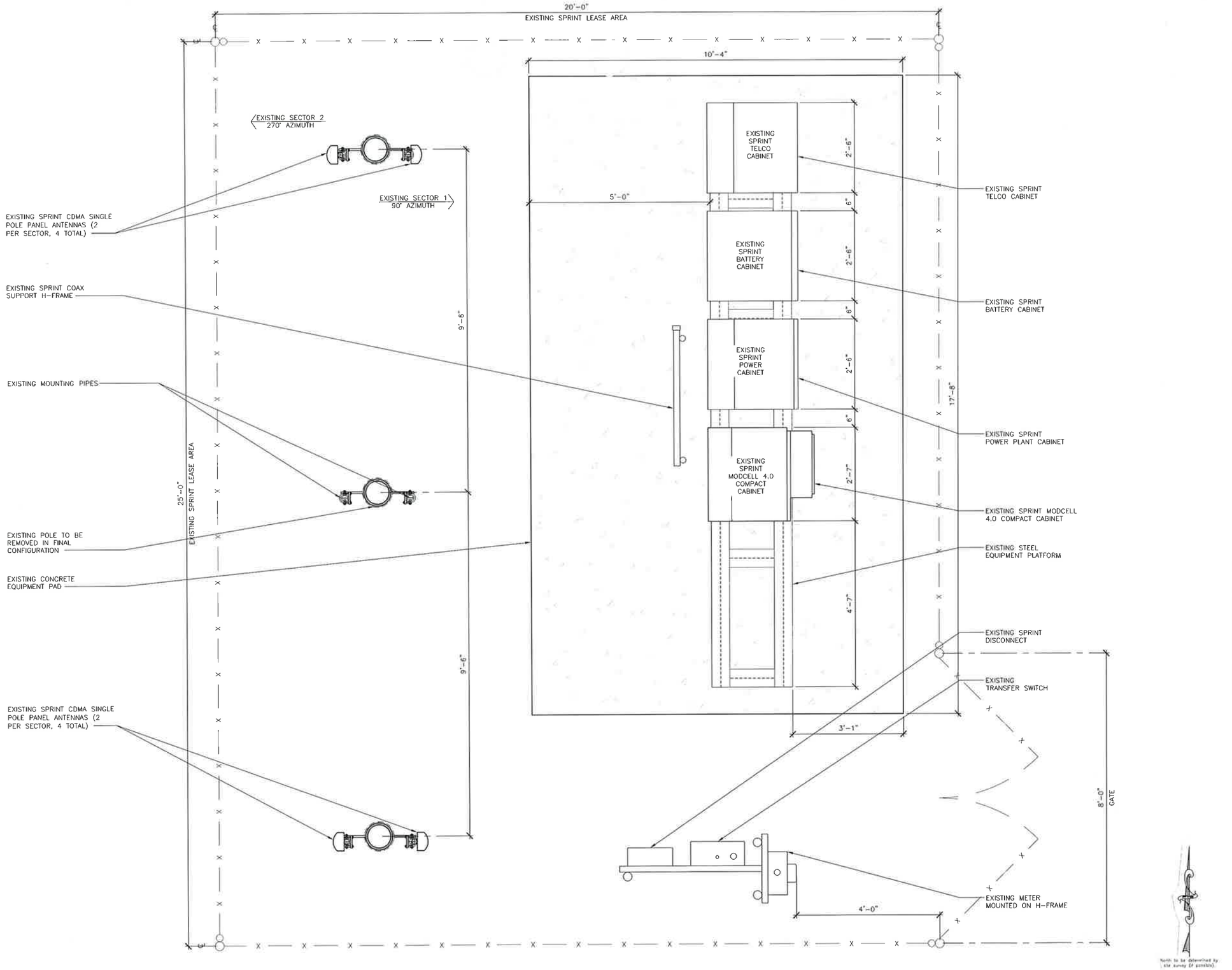


24"x36" SCALE: 3/4" = 1'-0"
11"x17" SCALE: 3/8" = 1'-0"
1' 6" 0" 1'

EXISTING ENLARGED EQUIPMENT AND ANTENNA PLAN | 1

THE INFORMATION CONTAINED IN THIS SET OF CONSTRUCTION DOCUMENTS IS PROPRIETARY BY NATURE. ANY USE OR DISCLOSURE OTHER THAN THAT WHICH RELATES TO CARRIER SERVICES IS STRICTLY PROHIBITED.

Sprint

Alcatel·Lucent

PTS
PACIFIC TELECOM SERVICES, LLC
3199C AIRPORT LOOP DRIVE
COSTA MESA, CA 92626

PROJECT INFORMATION:

NETWORK VISION MMBTS LAUNCH

# IND REVE / ERICKSON PROPERTY

SD03XC037

6163 ALPINE BLVD.
ALPINE, CA 91901
SAN DIEGO COUNTY

ISSUE DATE:

05/14/13

ISSUED FOR:

CONSTRUCTION

REVISIONS

| REV. | DATE | DESCRIPTION | INITIALS |
|---|---|---|---|
| A | 01/02/12 | ISSUED FOR 90% CD REVIEW | HS |
| B | 02/16/12 | REVISED FOR 90% CD REVIEW | HS |
| 0 | 03/20/12 | ISSUED FOR CONSTRUCTION | CD |
| 1 | 08/31/12 | REVISED FOR FINAL CD'S | AF |
| 2 | 09/06/12 | REVISED FOR CONSTRUCTION | RLD |
| 3 | 11/06/12 | REVISED "1" PER JURISDICTION COMMENTS | RLD |
| 4 | 05/14/13 | REVISED "2" PER JURISDICTION COMMENTS | LEB |

NOT FOR CONSTRUCTION UNLESS LABELED AS CONSTRUCTION SET

LICENSURE:

SHEET TITLE:

EXISTING ENLARGED EQUIPMENT AND ANTENNA PLAN

SHEET NUMBER: A-3

REVISION: 4

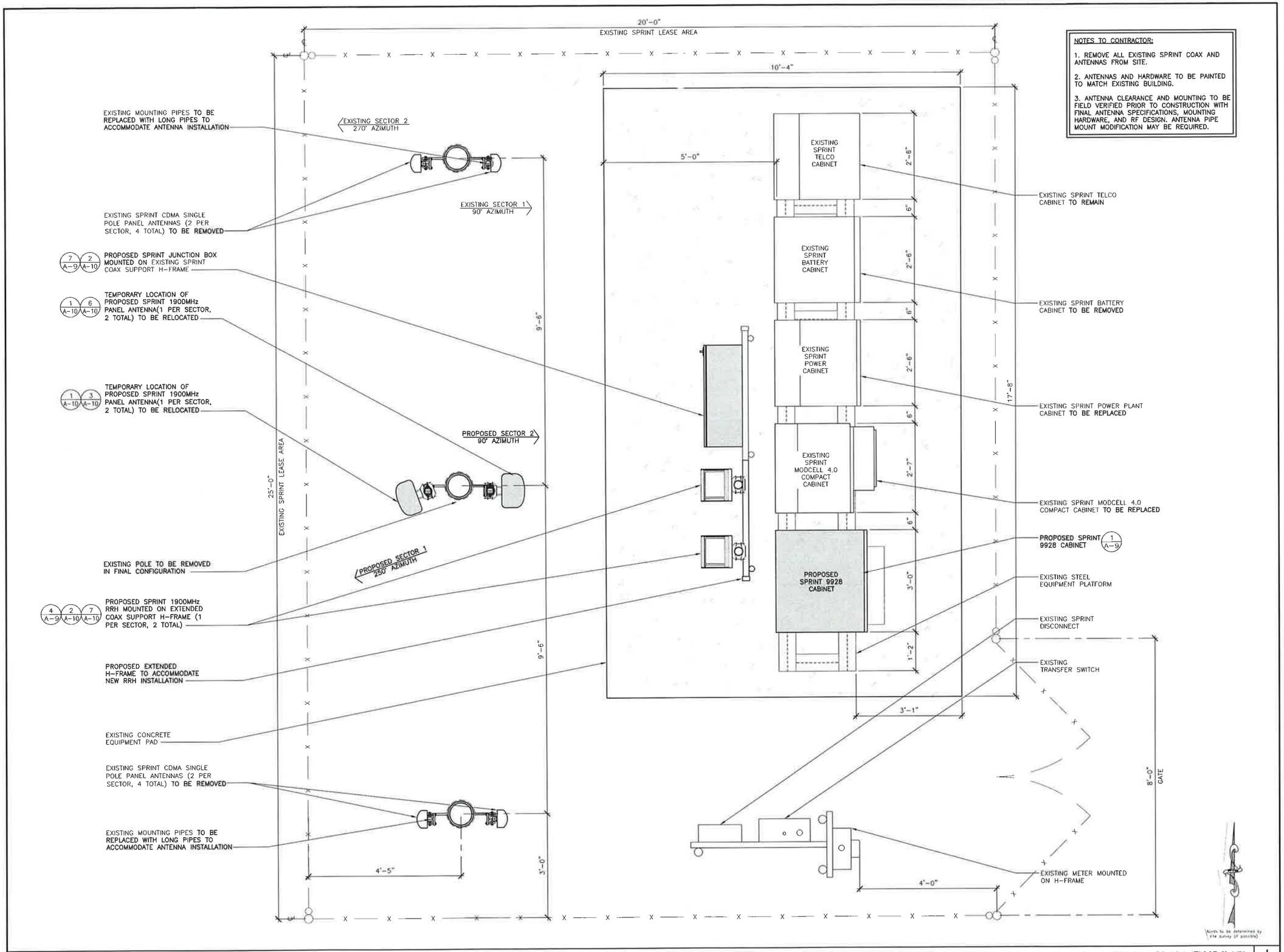


NOTES TO CONTRACTOR:

1. REMOVE ALL EXISTING SPRINT COAX AND ANTENNAS FROM SITE.
2. ANTENNAS AND HARDWARE TO BE PAINTED TO MATCH EXISTING BUILDING.
3. ANTENNA CLEARANCE AND MOUNTING TO BE FIELD VERIFIED PRIOR TO CONSTRUCTION WITH FINAL ANTENNA SPECIFICATIONS, MOUNTING HARDWARE, AND RF DESIGN. ANTENNA PIPE MOUNT MODIFICATION MAY BE REQUIRED.

24"x36" SCALE: 3/4" = 1'-0"
11"x17" SCALE: 3/8" = 1'-0"
1' 6" 0" 1'

ENLARGED EQUIPMENT AND ANTENNA PLAN (DURING) | 1

THE INFORMATION CONTAINED IN THIS SET OF CONSTRUCTION DOCUMENTS IS PROPRIETARY BY NATURE. ANY USE OR DISCLOSURE OTHER THAN THAT WHICH RELATES TO CARRIER SERVICES IS STRICTLY PROHIBITED.

Sprint

Alcatel·Lucent

PTS
PACIFIC TELECOM SERVICES, LLC
3199C AIRPORT LOOP DRIVE
COSTA MESA, CA 92626

PROJECT INFORMATION:

NETWORK VISION MMBTS LAUNCH

# IND REVE / ERICKSON PROPERTY

SD03XC037

6163 ALPINE BLVD.
ALPINE, CA 91901
SAN DIEGO COUNTY

ISSUE DATE:

05/14/13

ISSUED FOR:

CONSTRUCTION

REVISIONS

| REV. | DATE | DESCRIPTION | INITIALS |
|---|---|---|---|
| A | 01/02/12 | ISSUED FOR 90% CD REVIEW | HS |
| B | 02/16/12 | REVISED FOR 90% CD REVIEW | HS |
| 0 | 03/20/12 | ISSUED FOR CONSTRUCTION | CD |
| 1 | 08/31/12 | REVISED FOR FINAL CD'S | AF |
| 2 | 09/06/12 | REVISED FOR CONSTRUCTION | RLD |
| 3 | 11/06/12 | REVISED "1" PER JURISDICTION COMMENTS | RLD |
| 4 | 05/14/13 | REVISED "2" PER JURISDICTION COMMENTS | LEB |

NOT FOR CONSTRUCTION UNLESS LABELED AS CONSTRUCTION SET

LICENSURE:

SHEET TITLE:

ENLARGED EQUIPMENT AND ANTENNA PLAN (DURING)

SHEET NUMBER: A-3A

REVISION: 4

CONTRACTOR TO SEE FINAL EBTS SHEET FOR BUILD

| SECTOR 1 | AZIMUTH | RADCENTER | NUMBER OF ANTENNAS | VENDOR | MODEL | EFFECTIVE TILT | MECH. TILT | RET | RRH | JUMPER RRH TO ANT. | COMBINER | FIBER OPTIC | FIBER LENGTH |
|---|---|---|---|---|---|---|---|---|---|---|---|---|---|
| 1900MHz | 250' | 32'-0" | 1 | RFS | APXVSPP18-C-A20 | 0 | 0 | 0 | (1) 1900MHz | LCF12-50 10' MAX | – | (1) 1-1/4" HYBRIFLEX HB114-1-08U4-M5F | 60'-0" |
| **SECTOR 2** | **AZIMUTH** | **RADCENTER** | **NUMBER OF ANTENNAS** | **VENDOR** | **MODEL** | **EFFECTIVE TILT** | **MECH. TILT** | **RET** | **RRH** | **JUMPER RRH TO ANT.** | **COMBINER** | **FIBER OPTIC** | **FIBER LENGTH** |
| 1900MHz | 90' | 32'-0" | 1 | RFS | APXV9ERR18-C-A20 | 0 | 0 | 0 | (1) 1900MHz | LCF12-50 10' MAX | – | (1) 1-1/4" HYBRIFLEX HB114-1-08U4-M5F | 60'-0" |

NOTE: ANTENNA INFORMATION TAKEN FROM EBTS APPROVED 12/07/11.

2

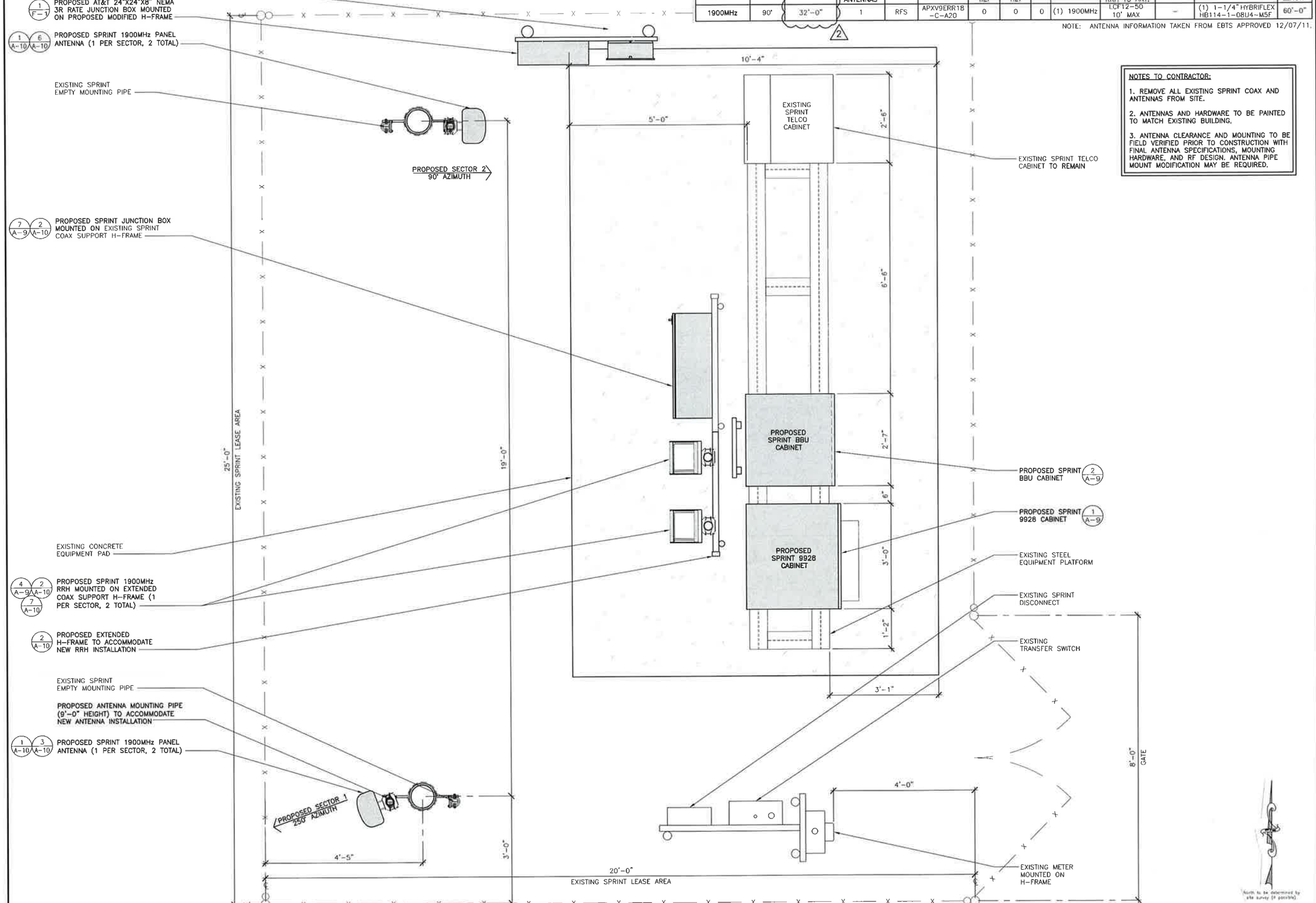


NOTES TO CONTRACTOR:

1. REMOVE ALL EXISTING SPRINT COAX AND ANTENNAS FROM SITE.
2. ANTENNAS AND HARDWARE TO BE PAINTED TO MATCH EXISTING BUILDING.
3. ANTENNA CLEARANCE AND MOUNTING TO BE FIELD VERIFIED PRIOR TO CONSTRUCTION WITH FINAL ANTENNA SPECIFICATIONS, MOUNTING HARDWARE, AND RF DESIGN. ANTENNA PIPE MOUNT MODIFICATION MAY BE REQUIRED.

24"x36" SCALE: 3/4" = 1'-0"
11"x17" SCALE: 3/8" = 1'-0"
1' 6" 0" 1'

PROPOSED ENLARGED EQUIPMENT AND ANTENNA PLAN | 1

THE INFORMATION CONTAINED IN THIS SET OF CONSTRUCTION DOCUMENTS IS PROPRIETARY BY NATURE. ANY USE OR DISCLOSURE OTHER THAN THAT WHICH RELATES TO CARRIER SERVICES IS STRICTLY PROHIBITED.

Sprint

Alcatel·Lucent

PTS
PACIFIC TELECOM SERVICES, LLC
3199C AIRPORT LOOP DRIVE
COSTA MESA, CA 92626

PROJECT INFORMATION:

NETWORK VISION MMBTS LAUNCH

# IND REVE / ERICKSON PROPERTY

SD03XC037

6163 ALPINE BLVD.
ALPINE, CA 91901
SAN DIEGO COUNTY

ISSUE DATE:

05/14/13

ISSUED FOR:

CONSTRUCTION

REVISIONS

| REV. | DATE | DESCRIPTION | INITIALS |
|---|---|---|---|
| A | 01/02/12 | ISSUED FOR 90% CD REVIEW | HS |
| B | 02/16/12 | REVISED FOR 90% CD REVIEW | HS |
| 0 | 03/20/12 | ISSUED FOR CONSTRUCTION | CD |
| 1 | 08/31/12 | REVISED FOR FINAL CD'S | AF |
| 2 | 09/06/12 | REVISED FOR CONSTRUCTION | RLD |
| 3 | 11/06/12 | REVISED "1" PER JURISDICTION COMMENTS | RLD |
| 4 | 05/14/13 | REVISED "2" PER JURISDICTION COMMENTS | LEB |

NOT FOR CONSTRUCTION UNLESS LABELED AS CONSTRUCTION SET

LICENSURE:

SHEET TITLE:

PROPOSED ENLARGED EQUIPMENT AND ANTENNA PLAN

SHEET NUMBER: A-4

REVISION: 4

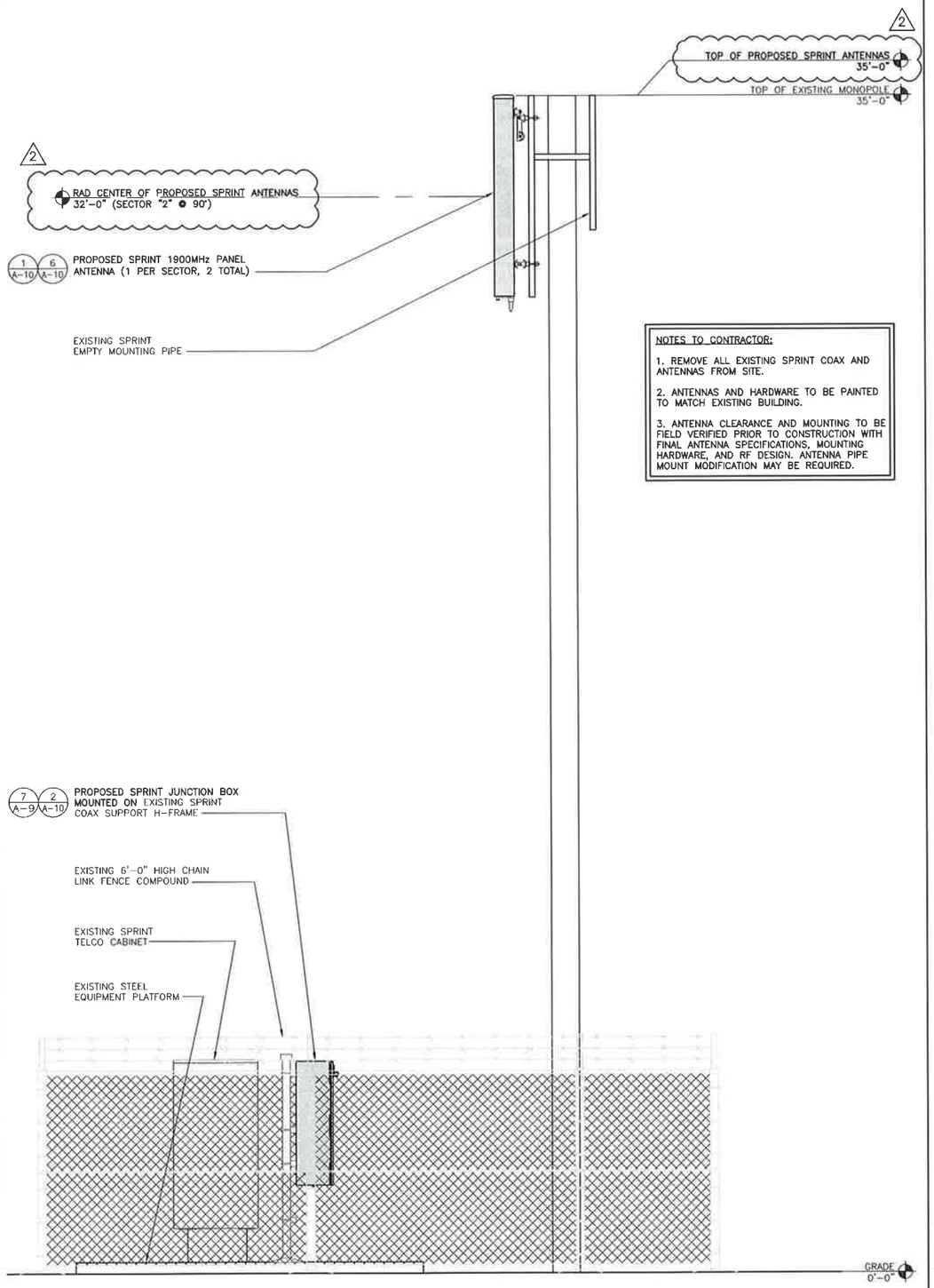


NOTES TO CONTRACTOR:

1. REMOVE ALL EXISTING SPRINT COAX AND ANTENNAS FROM SITE.

2. ANTENNAS AND HARDWARE TO BE PAINTED TO MATCH EXISTING BUILDING.

3. ANTENNA CLEARANCE AND MOUNTING TO BE FIELD VERIFIED PRIOR TO CONSTRUCTION WITH FINAL ANTENNA SPECIFICATIONS, MOUNTING HARDWARE, AND RF DESIGN. ANTENNA PIPE MOUNT MODIFICATION MAY BE REQUIRED.

24"x36" SCALE: 1/2" = 1'-0"
11"x17" SCALE: 1/4" = 1'-0"
2' 1' 0" 2'

PROPOSED NORTH ELEVATION 1

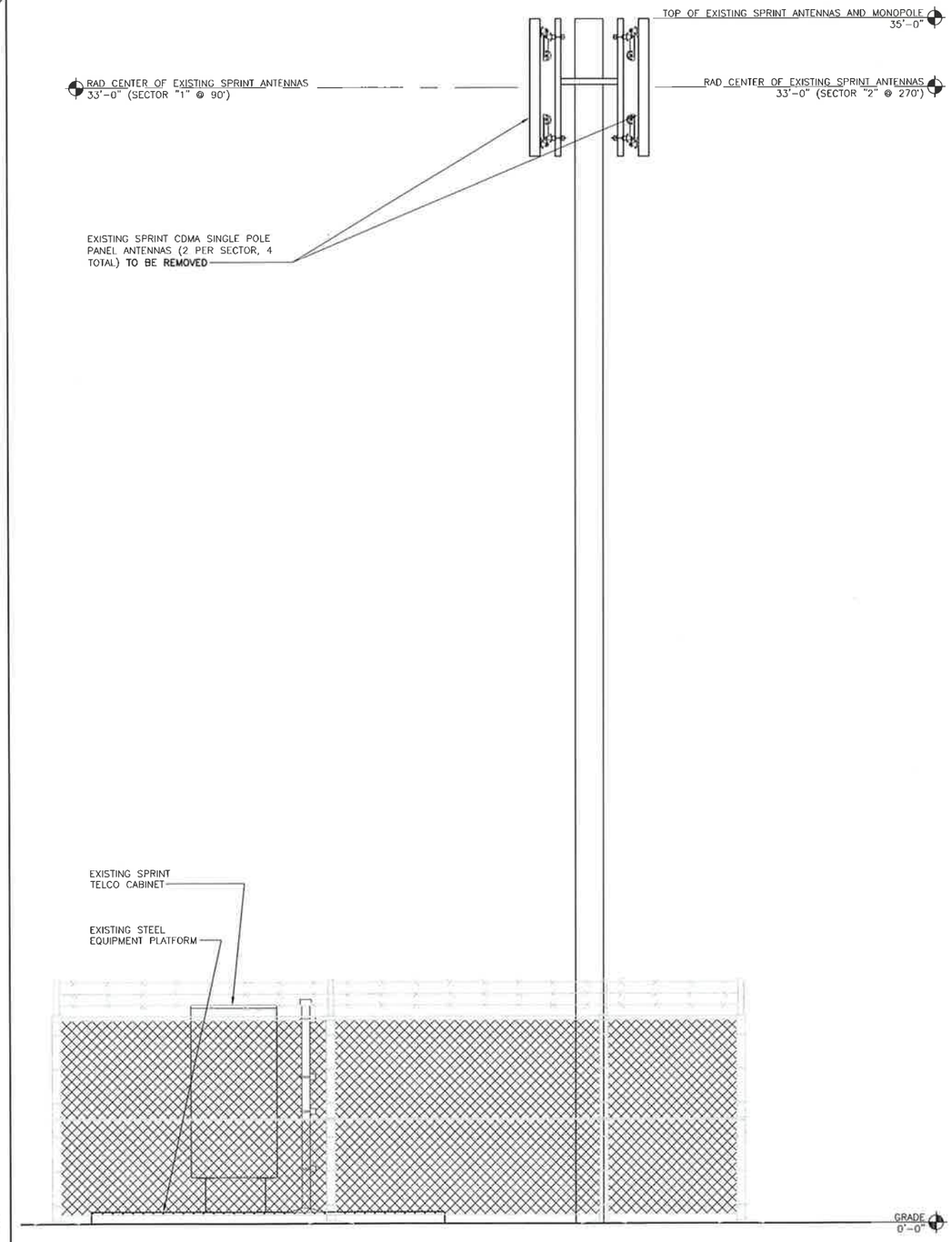


24"x36" SCALE: 1/2" = 1'-0"
11"x17" SCALE: 1/4" = 1'-0"
2' 1' 0" 2'

EXISTING NORTH ELEVATION 1

THE INFORMATION CONTAINED IN THIS SET OF CONSTRUCTION DOCUMENTS IS PROPRIETARY BY NATURE. ANY USE OR DISCLOSURE OTHER THAN THAT WHICH RELATES TO CARRIER SERVICES IS STRICTLY PROHIBITED.

Sprint

Alcatel·Lucent

PTS
PACIFIC TELECOM SERVICES, LLC
3199C AIRPORT LOOP DRIVE
COSTA MESA, CA 92626

PROJECT INFORMATION:

NETWORK VISION MMBTS LAUNCH

# IND REVE / ERICKSON PROPERTY
SD03XC037

6163 ALPINE BLVD.
ALPINE, CA 91901
SAN DIEGO COUNTY

ISSUE DATE:

05/14/13

ISSUED FOR:

CONSTRUCTION

REVISIONS

| REV. | DATE | DESCRIPTION | INITIALS |
|---|---|---|---|
| A | 01/02/12 | ISSUED FOR 90% CD REVIEW | HS |
| B | 02/16/12 | REVISED FOR 90% CD REVIEW | HS |
| 0 | 03/20/12 | ISSUED FOR CONSTRUCTION | CD |
| 1 | 08/31/12 | REVISED FOR FINAL CD'S | AF |
| 2 | 09/06/12 | REVISED FOR CONSTRUCTION | RLD |
| 3 | 11/06/12 | REVISED "1" PER JURISDICTION COMMENTS | RLD |
| 4 | 05/14/13 | REVISED "2" PER JURISDICTION COMMENTS | LEB |

NOT FOR CONSTRUCTION UNLESS LABELED AS CONSTRUCTION SET

LICENSURE:

SHEET TITLE:

EXISTING & PROPOSED NORTH ELEVATION

SHEET NUMBER: A-5

REVISION: 4

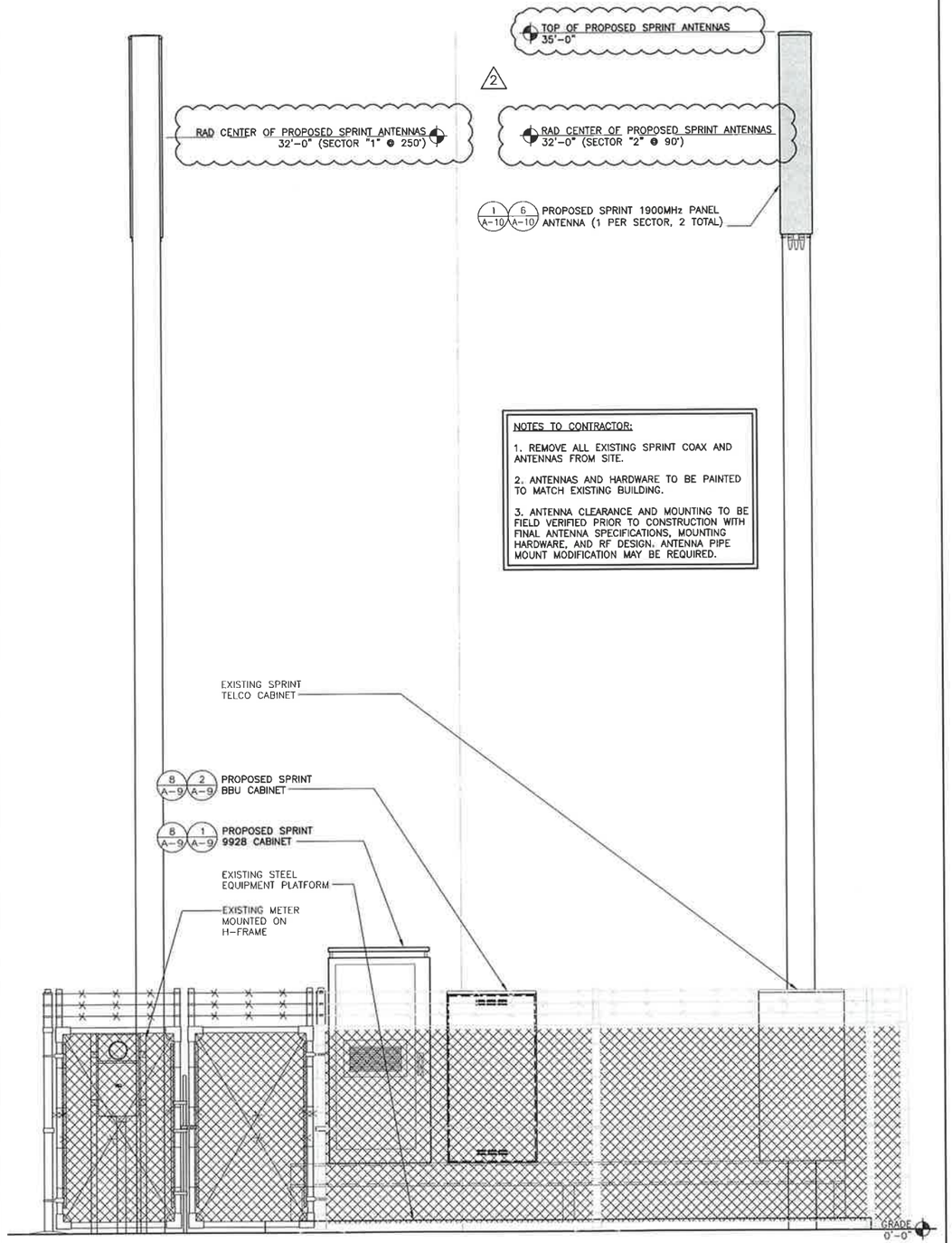


24"x36" SCALE: 1/2" = 1'-0"
11"x17" SCALE: 1/4" = 1'-0"
2' 1' 0" 2'

PROPOSED EAST ELEVATION 1

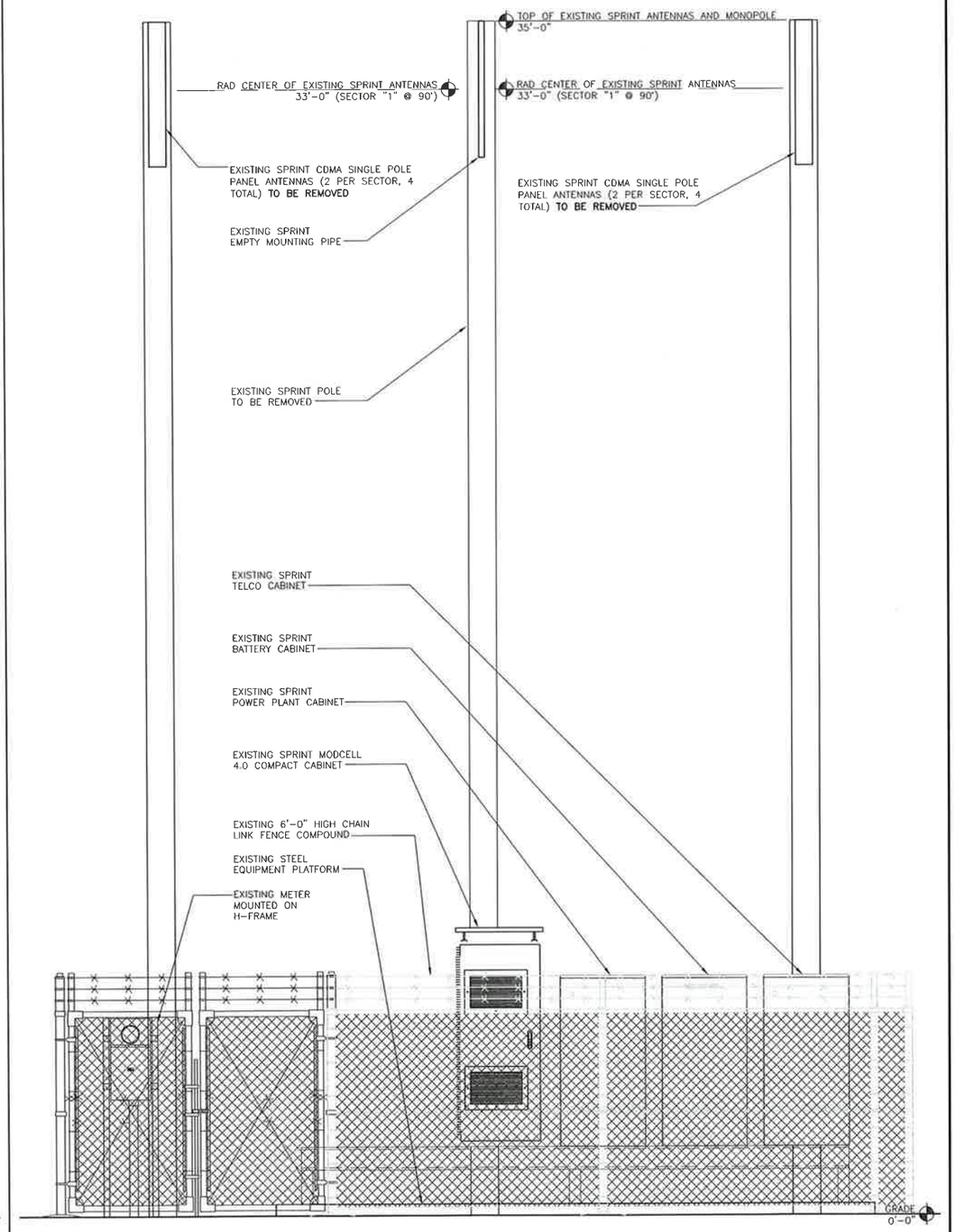


24"x36" SCALE: 1/2" = 1'-0"
11"x17" SCALE: 1/4" = 1'-0"
2' 1' 0" 2'

EXISTING EAST ELEVATION 1

Sprint

Alcatel·Lucent

PTS
PACIFIC TELECOM SERVICES, LLC
3199C AIRPORT LOOP DRIVE
COSTA MESA, CA 92626

PROJECT INFORMATION:

NETWORK VISION MMBTS LAUNCH

# IND REVE / ERICKSON PROPERTY

SD03XC037

6163 ALPINE BLVD.
ALPINE, CA 91901
SAN DIEGO COUNTY

ISSUE DATE:

05/14/13

ISSUED FOR:

CONSTRUCTION

REVISIONS

| REV. | DATE | DESCRIPTION | INITIALS |
|---|---|---|---|
| A | 01/02/12 | ISSUED FOR 90% CD REVIEW | HS |
| B | 02/16/12 | REVISED FOR 90% CD REVIEW | HS |
| 0 | 03/20/12 | ISSUED FOR CONSTRUCTION | CD |
| 1 | 08/31/12 | REVISED FOR FINAL CD'S | AF |
| 2 | 09/06/12 | REVISED FOR CONSTRUCTION | RLD |
| 3 | 11/06/12 | REVISED "1" PER JURISDICTION COMMENTS | RLD |
| 4 | 05/14/13 | REVISED "2" PER JURISDICTION COMMENTS | LEB |

NOT FOR CONSTRUCTION UNLESS LABELED AS CONSTRUCTION SET

LICENSURE:

SHEET TITLE:

EXISTING & PROPOSED EAST ELEVATION

SHEET NUMBER: A-6

REVISION: 4

THE INFORMATION CONTAINED IN THIS SET OF CONSTRUCTION DOCUMENTS IS PROPRIETARY BY NATURE. ANY USE OR DISCLOSURE OTHER THAN THAT WHICH RELATES TO CARRIER SERVICES IS STRICTLY PROHIBITED.

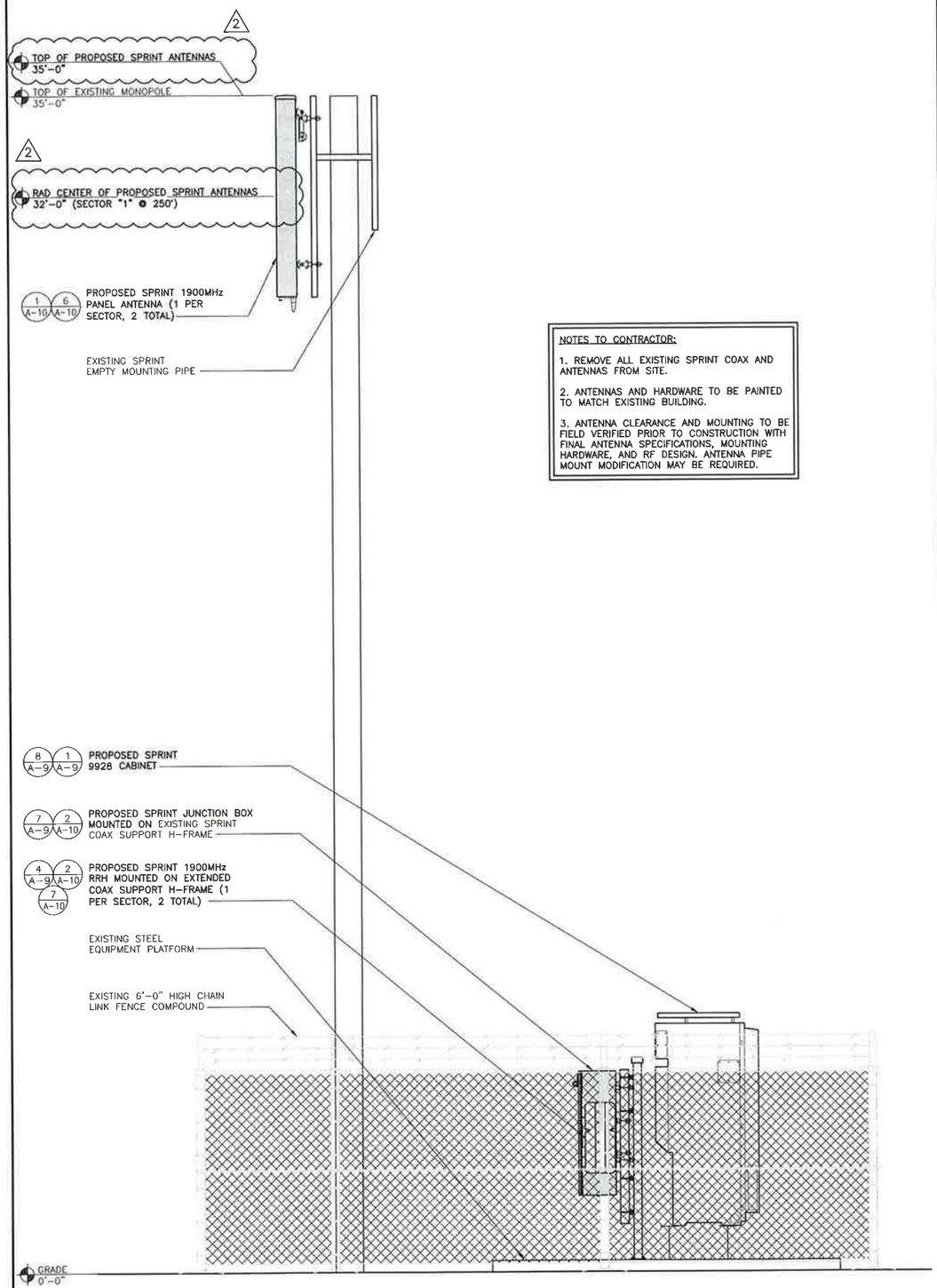


NOTES TO CONTRACTOR:

1. REMOVE ALL EXISTING SPRINT COAX AND ANTENNAS FROM SITE.

2. ANTENNAS AND HARDWARE TO BE PAINTED TO MATCH EXISTING BUILDING.

3. ANTENNA CLEARANCE AND MOUNTING TO BE FIELD VERIFIED PRIOR TO CONSTRUCTION WITH FINAL ANTENNA SPECIFICATIONS, MOUNTING HARDWARE, AND RF DESIGN. ANTENNA PIPE MOUNT MODIFICATION MAY BE REQUIRED.

24"x36" SCALE: 1/2" = 1'-0"
11"x17" SCALE: 1/4" = 1'-0"
2' 1' 0" 2'

PROPOSED SOUTH ELEVATION 1

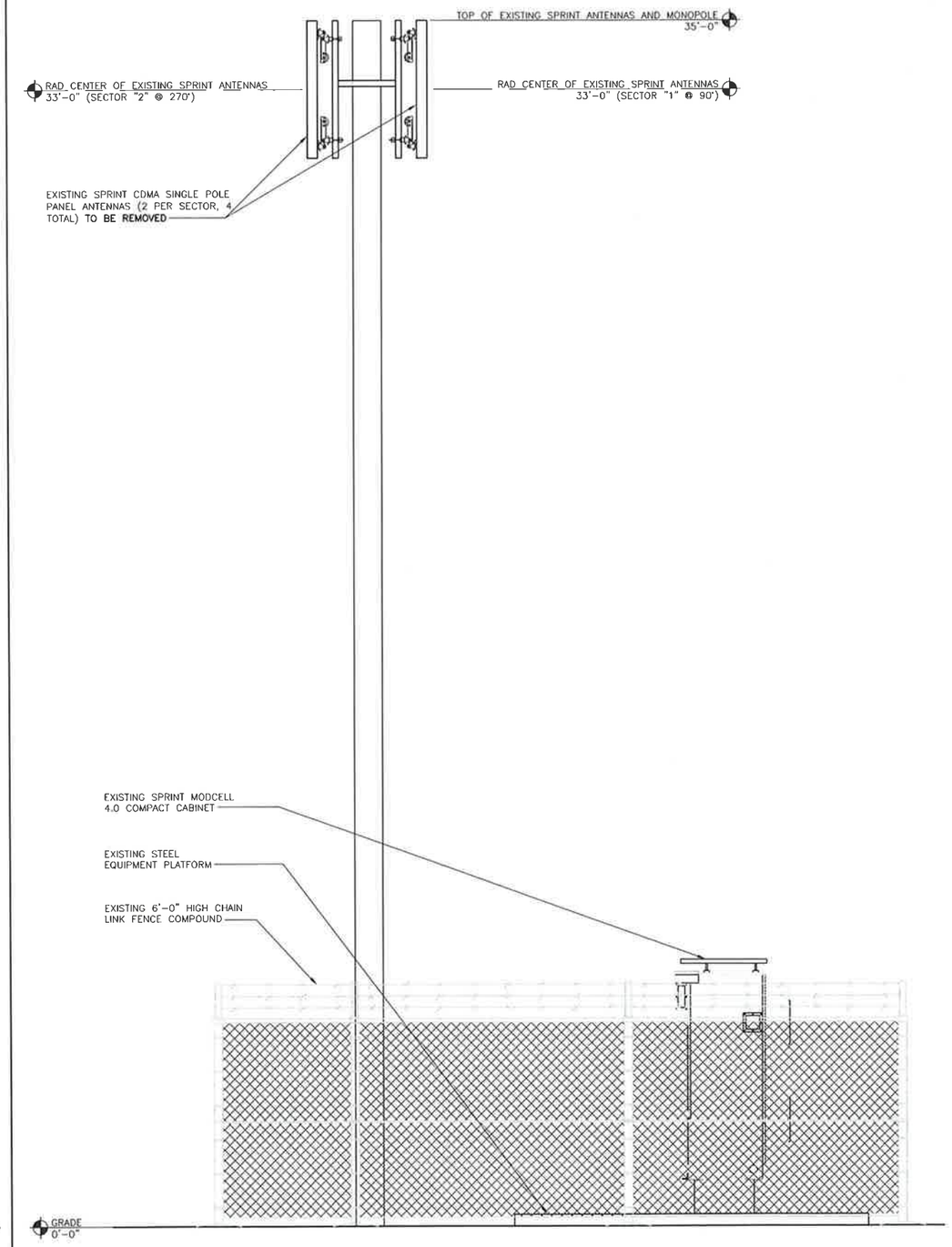


24"x36" SCALE: 1/2" = 1'-0"
11"x17" SCALE: 1/4" = 1'-0"
2' 1' 0" 2'

EXISTING SOUTH ELEVATION 1

Sprint

Alcatel·Lucent

PTS
PACIFIC TELECOM SERVICES, LLC
3199C AIRPORT LOOP DRIVE
COSTA MESA, CA 92626

PROJECT INFORMATION:

NETWORK VISION MMBTS LAUNCH

# IND REVE / ERICKSON PROPERTY

SD03XC037

6163 ALPINE BLVD.
ALPINE, CA 91901
SAN DIEGO COUNTY

ISSUE DATE:

05/14/13

ISSUED FOR:

CONSTRUCTION

REVISIONS

| REV. | DATE | DESCRIPTION | INITIALS |
|---|---|---|---|
| A | 01/02/12 | ISSUED FOR 90% CD REVIEW | HS |
| B | 02/16/12 | REVISED FOR 90% CD REVIEW | HS |
| 0 | 03/20/12 | ISSUED FOR CONSTRUCTION | CD |
| 1 | 08/31/12 | REVISED FOR FINAL CD'S | AF |
| 2 | 09/06/12 | REVISED FOR CONSTRUCTION | RLD |
| 3 | 11/06/12 | REVISED "1" PER JURISDICTION COMMENTS | RLD |
| 4 | 05/14/13 | REVISED "2" PER JURISDICTION COMMENTS | LEB |

NOT FOR CONSTRUCTION UNLESS LABELED AS CONSTRUCTION SET

LICENSURE:

SHEET TITLE:

EXISTING & PROPOSED SOUTH ELEVATION

SHEET NUMBER: A-7

REVISION: 4

THE INFORMATION CONTAINED IN THIS SET OF CONSTRUCTION DOCUMENTS IS PROPRIETARY BY NATURE. ANY USE OR DISCLOSURE OTHER THAN THAT WHICH RELATES TO CARRIER SERVICES IS STRICTLY PROHIBITED.

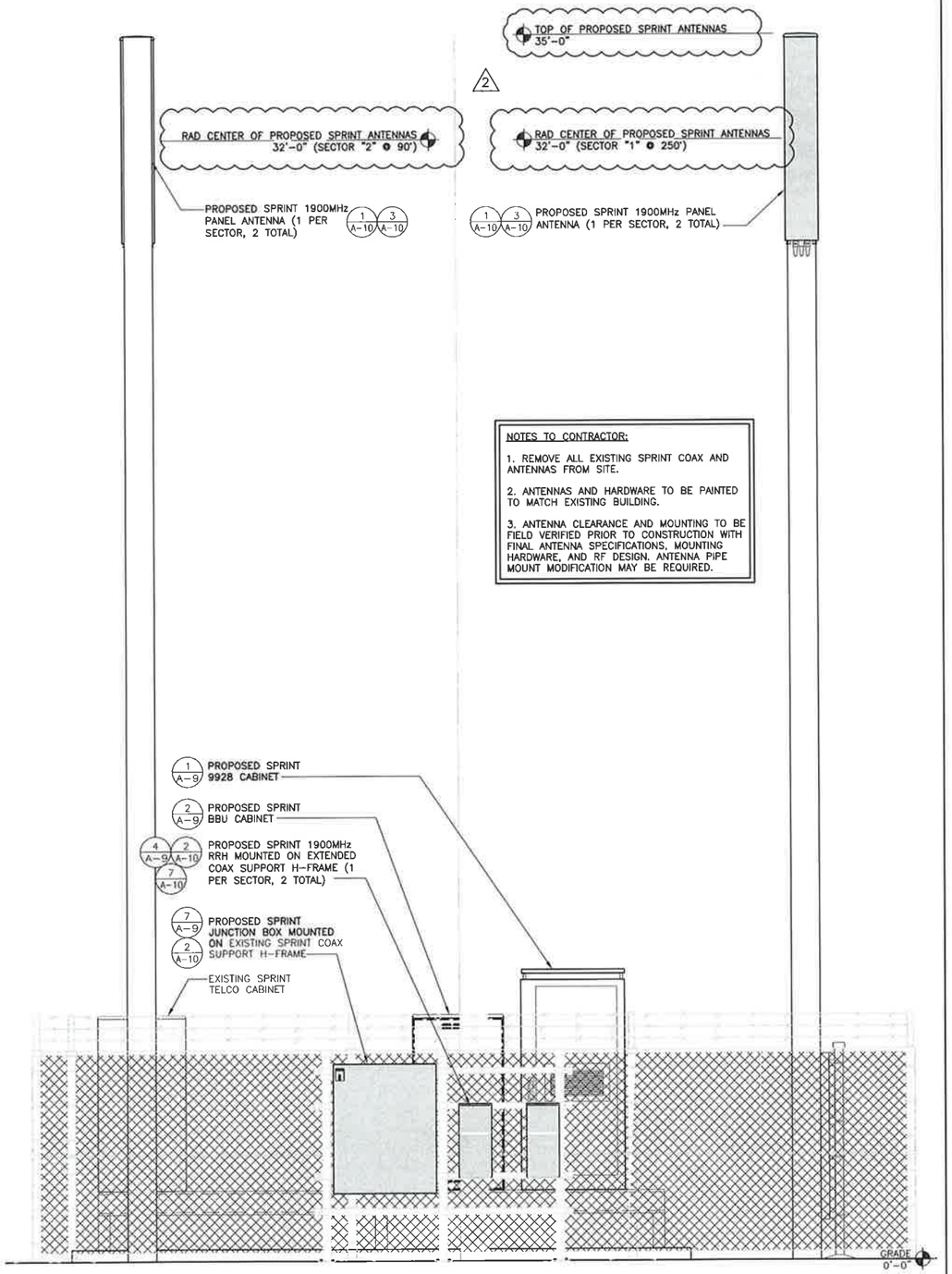


NOTES TO CONTRACTOR:

1. REMOVE ALL EXISTING SPRINT COAX AND ANTENNAS FROM SITE.

2. ANTENNAS AND HARDWARE TO BE PAINTED TO MATCH EXISTING BUILDING.

3. ANTENNA CLEARANCE AND MOUNTING TO BE FIELD VERIFIED PRIOR TO CONSTRUCTION WITH FINAL ANTENNA SPECIFICATIONS, MOUNTING HARDWARE, AND RF DESIGN. ANTENNA PIPE MOUNT MODIFICATION MAY BE REQUIRED.

24"x36" SCALE: 1/2" = 1'-0"
11"x17" SCALE: 1/4" = 1'-0"
2' 1' 0" 2'

PROPOSED WEST ELEVATION 1

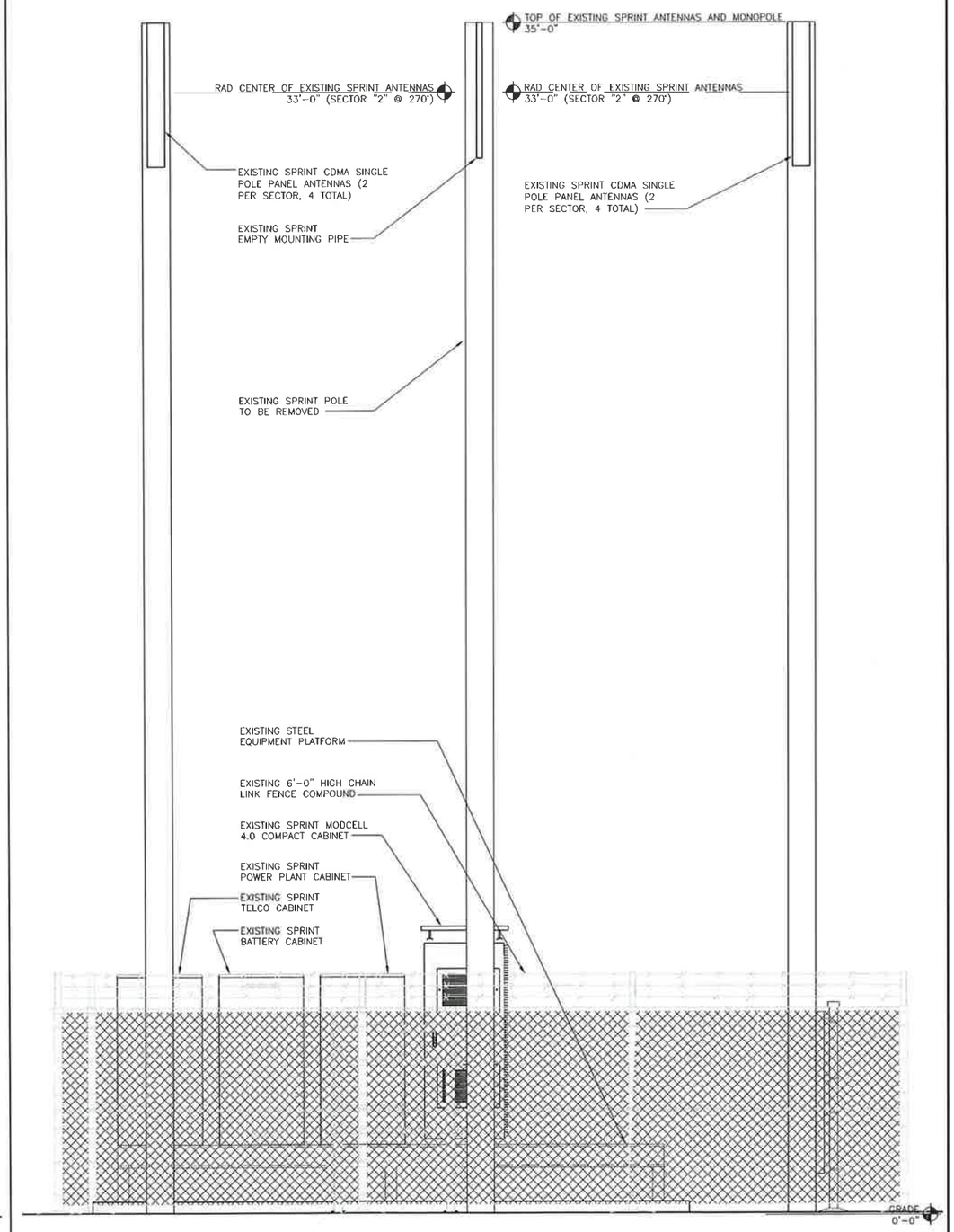


24"x36" SCALE: 1/2" = 1'-0"
11"x17" SCALE: 1/4" = 1'-0"
2' 1' 0" 2'

EXISTING WEST ELEVATION 1

Sprint

Alcatel·Lucent

PTS
PACIFIC TELECOM SERVICES, LLC
3199C AIRPORT LOOP DRIVE
COSTA MESA, CA 92626

PROJECT INFORMATION:

NETWORK VISION MMBTS LAUNCH

# IND REVE / ERICKSON PROPERTY

SD03XC037

6163 ALPINE BLVD.
ALPINE, CA 91901
SAN DIEGO COUNTY

ISSUE DATE:

05/14/13

ISSUED FOR:

CONSTRUCTION

REVISIONS

| REV. | DATE | DESCRIPTION | INITIALS |
|---|---|---|---|
| A | 01/02/12 | ISSUED FOR 90% CD REVIEW | HS |
| B | 02/16/12 | REVISED FOR 90% CD REVIEW | HS |
| 0 | 03/20/12 | ISSUED FOR CONSTRUCTION | CD |
| 1 | 08/31/12 | REVISED FOR FINAL CD'S | AF |
| 2 | 09/06/12 | REVISED FOR CONSTRUCTION | RLD |
| 3 | 11/06/12 | REVISED "1" PER JURISDICTION COMMENTS | RLD |
| 4 | 05/14/13 | REVISED "2" PER JURISDICTION COMMENTS | LEB |

NOT FOR CONSTRUCTION UNLESS LABELED AS CONSTRUCTION SET

LICENSURE:

SHEET TITLE:

EXISTING & PROPOSED WEST ELEVATION

SHEET NUMBER: A-8

REVISION: 4

THE INFORMATION CONTAINED IN THIS SET OF CONSTRUCTION DOCUMENTS IS PROPRIETARY BY NATURE. ANY USE OR DISCLOSURE OTHER THAN THAT WHICH RELATES TO CARRIER SERVICES IS STRICTLY PROHIBITED.

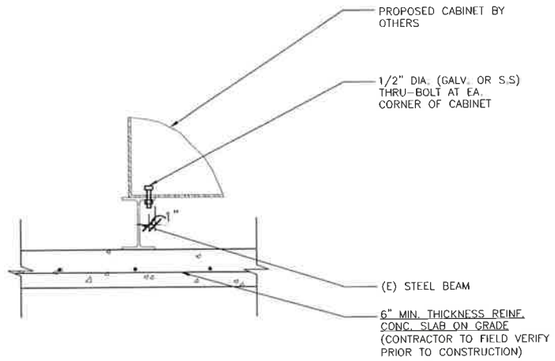


## CABINET TO STEEL BEAM CONNECTION 8

24"x36" SCALE: 1"=1'-0"
11"x17" SCALE: 1/2"=1'-0"

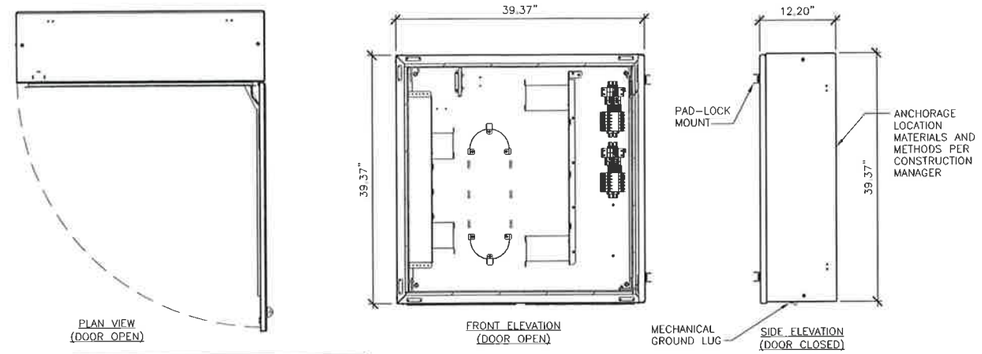


MANUFACTURE SUPPLIED HARDWARE FOR MOUNTING TO UNISTRUT:
M10 (3/8 INCH) NUTS (4)
M10 (3/8 INCH) FLAT WASHERS (8)
M10 (3/8 INCH) SPRING NUTS FROM THE SAME MANUFACTURER AS THE STRUTS (4)
M10 (3/8 INCH) X 25MM (1 INCH) LONG HEX-HEAD BLOTS (4)
M10 (3/8 INCH) LOCK WASHERS (4)

DIMENSIONS: 39.37" X 39.37" X 13"
WEIGHT: 60.0 LBS

## JUNCTION BOX 7

24"x36" SCALE: 1" = 1'-0"
11"x17" SCALE: 1/2" = 1'-0"

## NOT USED 6

24"x36" SCALE: NOT TO SCALE
11"x17" SCALE: NOT TO SCALE

## NOT USED 5

24"x36" SCALE: NOT TO SCALE
11"x17" SCALE: NOT TO SCALE

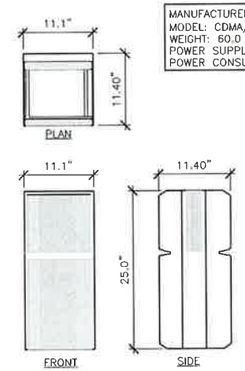


MANUFACTURER: ALCATEL-LUCENT
MODEL: CDMA/LTE DUAL TECH 4X45W
WEIGHT: 60.0 LBS
POWER SUPPLY: -48 VDC
POWER CONSUMPTION: 680W TYPICAL

## 1900MHz RRH SPECIFICATION 4

24"x36" SCALE: 1" = 1'-0"
11"x17" SCALE: 1/2" = 1'-0"

## NOT USED 3

24"x36" SCALE: NOT TO SCALE
11"x17" SCALE: NOT TO SCALE

MANUFACTURER: ANDREW (COMMSCOPE)
MODEL: 60ECv2

CABINET DIMENSIONS:
HEIGHT: 60 in. (152.4 cm)
WIDTH: 31 in. (78.7 cm)
DEPTH: 30 in. (76.2 cm)

CABINET OPERATING TEMPERATURE RANGE:
-40°C TO 46°C

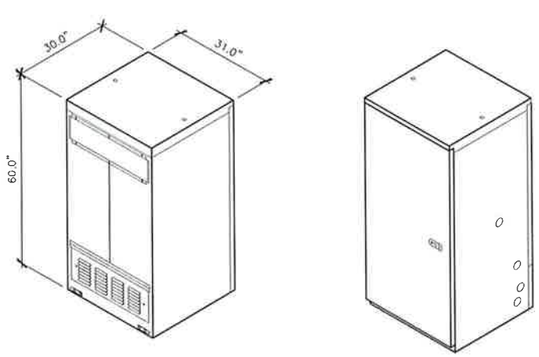


## BBU CABINET 2

24"x36" SCALE: 1/2"=1'-0"
11"x17" SCALE: 1/4"=1'-0"

MANUFACTURE: ALCATEL-LUCENT

MODEL #: 9928 BTS OUTDOOR

MAIN CABINET DIMENSIONS:

HEIGHT: 72"
WIDTH: 35.4"
DEPTH: 37.8"

WEIGHT:

HALF LOADED: 1033 LBS
FULLY LOADED: 1162 LBS

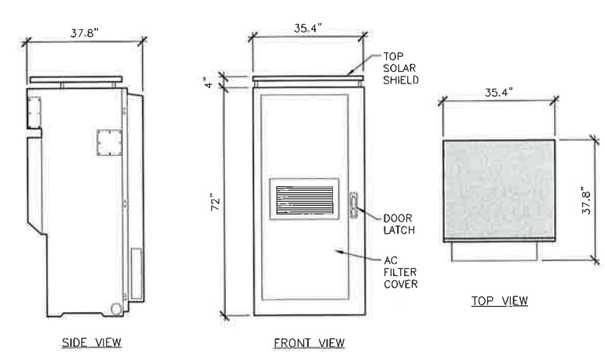


## 9928 CABINET 1

24"x36" SCALE: 1/2"=1'-0"
11"x17" SCALE: 1/4"=1'-0"

Sprint

Alcatel·Lucent

PTS
PACIFIC TELECOM SERVICES, LLC
3199C AIRPORT LOOP DRIVE
COSTA MESA, CA 92626

PROJECT INFORMATION:

NETWORK VISION MMBTS LAUNCH

IND REVE / ERICKSON PROPERTY
SD03XC037

6163 ALPINE BLVD.
ALPINE, CA 91901
SAN DIEGO COUNTY

ISSUE DATE:

05/14/13

ISSUED FOR:

CONSTRUCTION

REVISIONS

| REV. | DATE | DESCRIPTION | INITIALS |
|---|---|---|---|
| A | 01/02/12 | ISSUED FOR 90% CD REVIEW | HS |
| B | 02/16/12 | REVISED FOR 90% CD REVIEW | HS |
| 0 | 03/20/12 | ISSUED FOR CONSTRUCTION | CD |
| 1 | 08/31/12 | REVISED FOR FINAL CD'S | AF |
| 2 | 09/06/12 | REVISED FOR CONSTRUCTION | RLD |
| 3 | 11/06/12 | REVISED "1" PER JURISDICTION COMMENTS | RLD |
| 4 | 05/14/13 | REVISED "2" PER JURISDICTION COMMENTS | LEB |

NOT FOR CONSTRUCTION UNLESS LABELED AS CONSTRUCTION SET

LICENSURE:

SHEET TITLE:

EQUIPMENT DETAILS

SHEET NUMBER: A-9

REVISION: 4

THE INFORMATION CONTAINED IN THIS SET OF CONSTRUCTION DOCUMENTS IS PROPRIETARY BY NATURE. ANY USE OR DISCLOSURE OTHER THAN THAT WHICH RELATES TO CARRIER SERVICES IS STRICTLY PROHIBITED.

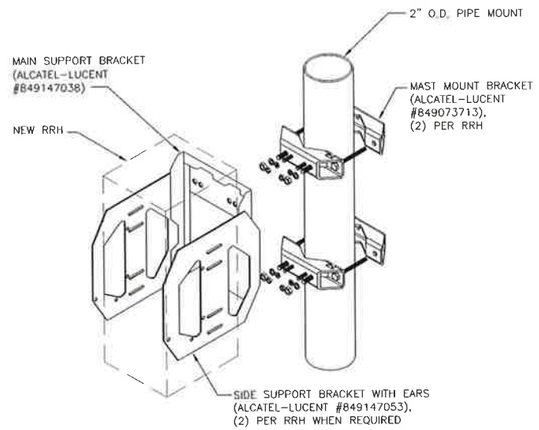


## RRH MOUNTING DETAIL 7

24"x36" SCALE: NOT TO SCALE
11"x17" SCALE: NOT TO SCALE

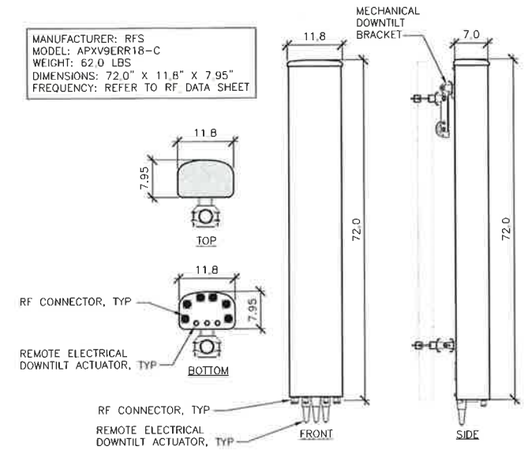


## RFS ANTENNA SPECIFICATIONS 6

24"x36" SCALE: 3/4" = 1'-0"
11"x17" SCALE: 3/8" = 1'-0"

## NOT USED 5

24"x36" SCALE: NOT TO SCALE
11"x17" SCALE: NOT TO SCALE

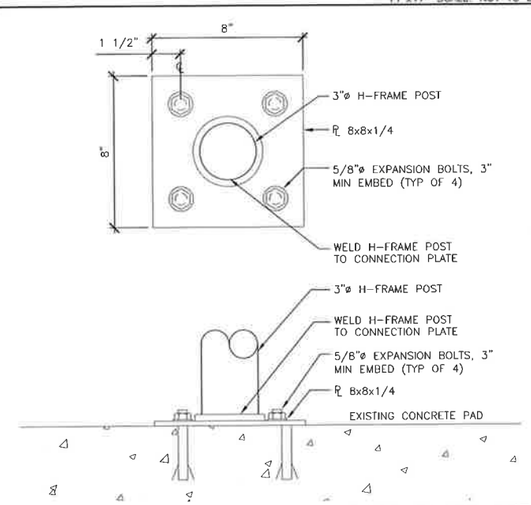


## BASE PLATE DETAIL 4

24"x36" SCALE: 3"=1'-0"
11"x17" SCALE: 1 1/2"=1'-0"

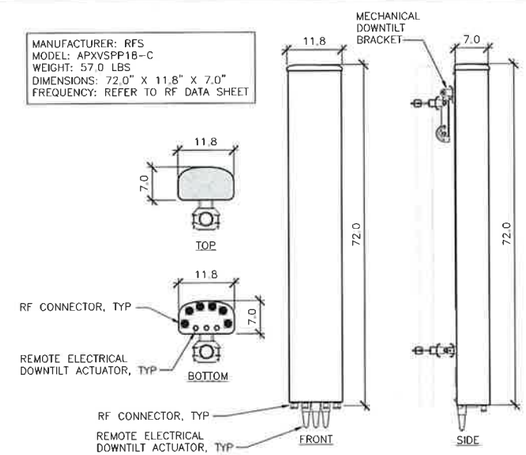


## RFS ANTENNA SPECIFICATIONS 3

24"x36" SCALE: 3/4" = 1'-0"
11"x17" SCALE: 3/8" = 1'-0"

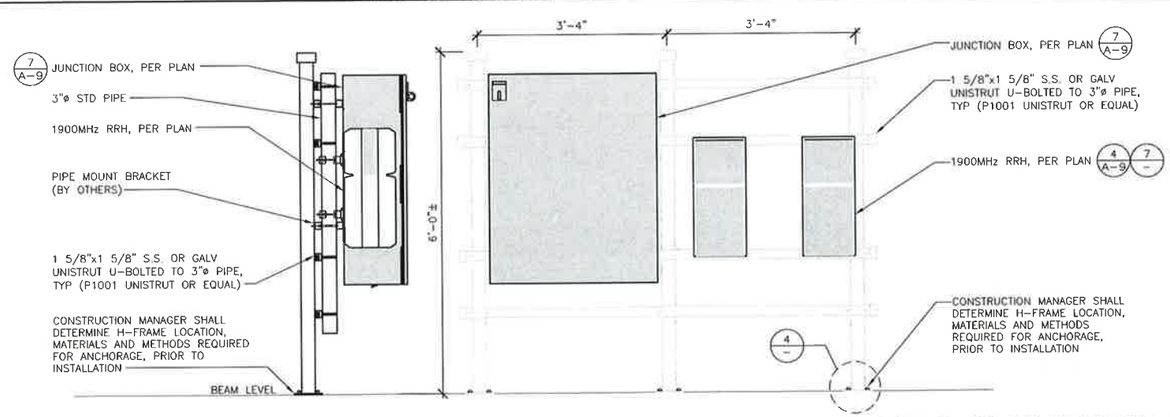


## JUNCTION BOX H-FRAME MOUNTING DETAIL 2

24"x36" SCALE: 3/4"=1'-0"
11"x17" SCALE: 3/8"=1'-0"

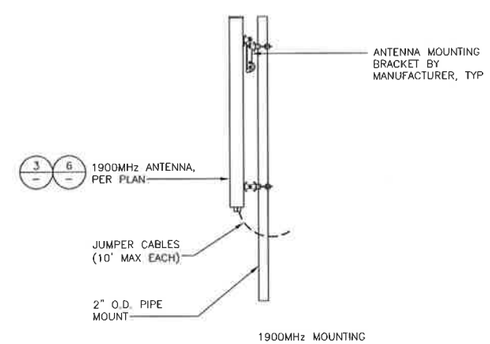


## ANTENNA & RRH MOUNTING 1

24"x36" SCALE: 1/2" = 1'-0"
11"x17" SCALE: 1/4" = 1'-0"

THE INFORMATION CONTAINED IN THIS SET OF CONSTRUCTION DOCUMENTS IS PROPRIETARY BY NATURE. ANY USE OR DISCLOSURE OTHER THAN THAT WHICH RELATES TO CARRIER SERVICES IS STRICTLY PROHIBITED.

Sprint

Alcatel·Lucent

PTS
PACIFIC TELECOM SERVICES, LLC
3199C AIRPORT LOOP DRIVE
COSTA MESA, CA 92626

PROJECT INFORMATION:

NETWORK VISION MMBTS LAUNCH

# IND REVE / ERICKSON PROPERTY

SD03XC037

6163 ALPINE BLVD.
ALPINE, CA 91901
SAN DIEGO COUNTY

ISSUE DATE:

05/14/13

ISSUED FOR:

CONSTRUCTION

REVISIONS

| REV. | DATE | DESCRIPTION | INITIALS |
|---|---|---|---|
| A | 01/02/12 | ISSUED FOR 90% CD REVIEW | HS |
| B | 02/16/12 | REVISED FOR 90% CD REVIEW | HS |
| 0 | 03/20/12 | ISSUED FOR CONSTRUCTION | CD |
| 1 | 08/31/12 | REVISED FOR FINAL CD'S | AF |
| 2 | 09/06/12 | REVISED FOR CONSTRUCTION | RLD |
| 3 | 11/06/12 | REVISED "1" PER JURISDICTION COMMENTS | RLD |
| 4 | 05/14/13 | REVISED "2" PER JURISDICTION COMMENTS | LEB |

NOT FOR CONSTRUCTION UNLESS LABELED AS CONSTRUCTION SET

LICENSURE:

SHEET TITLE:

CONSTRUCTION DETAILS

SHEET NUMBER: A-10

REVISION: 4

**LOADS**

**Design Criteria:**

- 2010 California Building Code
- ASCE7-05

**Notes:**

- Figure 6-21 C1
- Force = p*Cf*A

| | | |
|---|---|---|
| Ice Wt. = | 56 | pcf |
| Design Ice Thickness = | 1.40 | in |
| Height of Component, z = | 100 | ft |
| $S_{DS}$ = | 1.500 | g |

| | | |
|---|---|---|
| Design Wind Pressure = | 43.13 | psf |
| Design Wind Pressure (Ice) = | 4.17 | psf |
| Fp = | 0.63 | W (0.7*E) |
| G = | 0.85 | 6.5.8.1 |

| APPURTENANCE | | | | | NO ICE | | | | | ICE | | | OTM's | Overturning Moments | | |
|---|---|---|---|---|---|---|---|---|---|---|---|---|---|---|---|---|
| Model | Manufacturer | Quantity # | Blocked Face | Blocked Side | Weight lbs. | Force Face lbs. | Force Side lbs. | 0.7*Eh lbs. | 0.7*Ev lbs. | Weight lbs. | Force Face lbs. | Force Side lbs. | Height feet | Wind 1.0W lb-ft | Seismic 0.7E lb-ft | Wind (ice) 1.0Wi lb-ft |
| H-Frame 2.5"x6' Std. Steel Pipe | AISC Manual | 2 | 0 | 0 | 69.60 | 149.07 | 149.07 | 43.85 | 14.62 | 161.74 | 23.02 | 23.02 | 3.0 | 223.60 | 111.45 | 34.53 |
| H-Frame Loading | H-Frame | 1 | 0 | 0 | 500.00 | 1125.06 | 571.52 | 315.00 | 105.00 | 1165.60 | 120.36 | 64.39 | 3.0 | 1687.59 | 800.63 | 180.54 |
| P1000T Unistrut x 1'-0" | Unistrut | 1 | 0 | 0 | 3.78 | 8.25 | 8.25 | 2.38 | 0.79 | 12.11 | 2.63 | 2.53 | 6.0 | 24.76 | 9.62 | 7.60 |
| P1000T Unistrut x 2'-0" | Unistrut | 1 | 0 | 0 | 3.78 | 19.38 | 19.38 | 2.38 | 0.79 | 18.65 | 4.74 | 4.74 | 1.5 | 43.61 | 7.84 | 10.67 |
| P1000T Unistrut x 4'-0" | Unistrut | 1 | 0 | 0 | 7.56 | 46.73 | 46.73 | 4.76 | 1.59 | 35.55 | 10.07 | 10.07 | 3.0 | 70.09 | 12.11 | 15.10 |
| Unistrut Load x 1'-0" | Unistrut | 1 | 0 | 0 | 100.00 | 112.15 | 56.07 | 63.00 | 21.00 | 194.08 | 14.91 | 8.23 | 1.5 | 84.11 | 112.88 | 11.18 |
| Unistrut Load x 2'-0" | Unistrut | 1 | 0 | 0 | 200.00 | 224.29 | 113.58 | 126.00 | 42.00 | 349.25 | 27.01 | 15.07 | 0.0 | 0.00 | 131.25 | 0.00 |
| Unistrut Load x 4'-0" | Unistrut | 1 | 0 | 0 | 400.00 | 454.34 | 232.92 | 252.00 | 84.00 | 659.60 | 51.79 | 29.15 | 0.0 | 0.00 | 262.50 | 0.00 |
| None | None | 0 | 0 | 0 | 0.00 | 0.00 | 0.00 | 0.00 | 0.00 | 0.00 | 0.00 | 0.00 | 0.0 | 0.00 | 0.00 | 0.00 |
| None | None | 0 | 0 | 0 | 0.00 | 0.00 | 0.00 | 0.00 | 0.00 | 0.00 | 0.00 | 0.00 | 0.0 | 0.00 | 0.00 | 0.00 |
| **Totals** | | | | | **1284.72** | **2139.3** | **1197.5** | **809.4** | **269.8** | **2596.8** | **254.4** | **167.2** | | **2133.76** | **1448.27** | **259.63** |

| | | | | | | |
|---|---|---|---|---|---|---|
| Bolt Spacing | 0.5 | feet | Mx Pipe (ASD) lb-ft | 2133.76 | Zx (req'd) in³ | 1.22 |
| Bolts Per Face | 2 | | | | | |
| Total Bolts | 4 | | | | | |

**Min. 2 1/2" std. steel pipe**

| ASD Load Combinations | | Roof Loads per Edge: Single Edge T lb | Roof Loads per Edge: Single Edge C lb | Bolt Load per Conn.: Vertical T lb/bolt | Bolt Load per Conn.: Lateral Shear lb/bolt |
|---|---|---|---|---|---|
| D | 1 | ~~642.36~~ | 642.36 | ~~321.18~~ | 0.00 |
| 1.0D+W | 5 | -3625.16 | 4909.88 | -1812.58 | 534.82 |
| 0.6D+W | 7 | -3882.10 | 4652.94 | -1941.05 | 534.82 |
| (1.0+.14*SDs)*D+0.7*E | 5E | -1984.38 | 3538.89 | -992.19 | 202.34 |
| (0.6-.14*SDs)*D+0.7*E | 8E | -2511.12 | 3012.16 | -1255.56 | 202.34 |
| D+0.7Di+0.7Wi | 2i | ~~738.12~~ | 1465.08 | ~~369.06~~ | 44.53 |
| 0.6D+0.7Di+0.7Wi | 7i | ~~491.18~~ | 1208.14 | ~~340.59~~ | 44.53 |
| **Max Loads Wind** | | -3882.10 | 4909.88 | -1941.05 | 534.82 |
| **Max Seismic Loads** | | -2511.12 | 3538.89 | -1255.56 | 202.34 |

**Bolts To Steel Platform ; Thru bolts to wood**
1/2" A307 bolts (Max. T = 4.417 kips, Max. V = 2.356 kips) — 0.67 O.K.

**Bolts To Concrete Seismic**
1/2" Hilti Kwik Bolt TZ 3 1/4" min embed (Max. T = 2.028 kips, Max. V = 2.39 kips) — 0.70 O.K.
Cracked Concrete, Seismic Conditions, FC = 3,000 psi min.

**Bolts To Concrete Wind**
1/2" Hilti Kwik Bolt TZ 3 1/4" min embed (Max. T = 2.500 kips, Max. V = 2.945 kips) — 0.96 O.K.
Cracked Concrete, Seismic Conditions, FC = 3,000 psi min.

**5/8" x 8" x 9'-8" base plate, 36 ksi, bolts at 6"o.c.**

| | | |
|---|---|---|
| Zx = | 0.78125 in | 0.76 O.K. |
| Mmax = | 1403.443 lb-ft | |

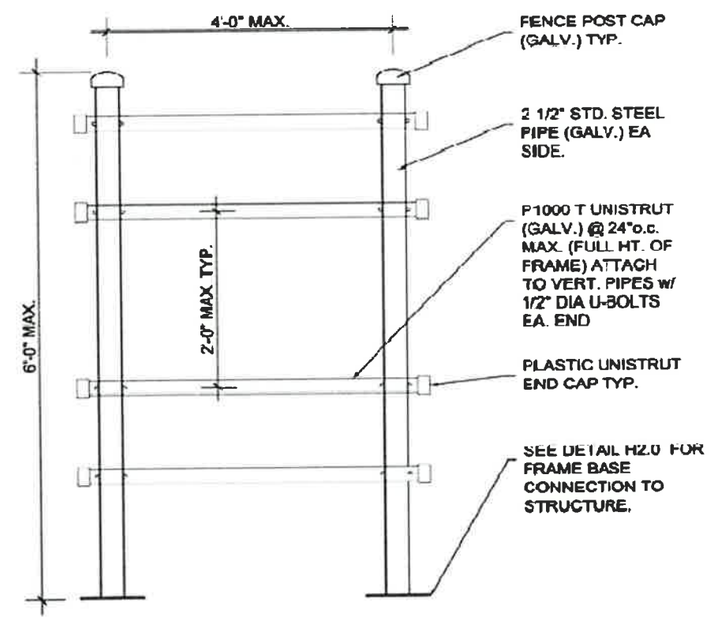


H-FRAME CALCULATION DETAIL 1
24"x36" SCALE: NTS
11"x17" SCALE: NTS

Sprint

Alcatel·Lucent

PTS
PACIFIC TELECOM SERVICES, LLC
3199C AIRPORT LOOP DRIVE
COSTA MESA, CA 92626

PROJECT INFORMATION:

NETWORK VISION MMBTS LAUNCH
IND REVE / ERICKSON PROPERTY
SD03XC037
6163 ALPINE BLVD.
ALPINE, CA 91901
SAN DIEGO COUNTY

ISSUE DATE:
05/14/13

ISSUED FOR:
CONSTRUCTION

REVISIONS

| REV. | DATE | DESCRIPTION | INITIALS |
|---|---|---|---|
| A | 01/02/12 | ISSUED FOR 90% CD REVIEW | HS |
| B | 02/16/12 | REVISED FOR 90% CD REVIEW | HS |
| 0 | 03/20/12 | ISSUED FOR CONSTRUCTION | CD |
| 1 | 08/31/12 | REVISED FOR FINAL CD'S | AF |
| 2 | 09/06/12 | REVISED FOR CONSTRUCTION | RLD |
| 3 | 11/06/12 | REVISED "1" PER JURISDICTION COMMENTS | RLD |
| 4 | 05/14/13 | REVISED "2" PER JURISDICTION COMMENTS | LEB |

NOT FOR CONSTRUCTION UNLESS LABELED AS CONSTRUCTION SET

LICENSURE:

SHEET TITLE:
H-FRAME CALCULATION DETAIL

SHEET NUMBER: A-11
REVISION: 4

THE INFORMATION CONTAINED IN THIS SET OF CONSTRUCTION DOCUMENTS IS PROPRIETARY BY NATURE. ANY USE OR DISCLOSURE OTHER THAN THAT WHICH RELATES TO CARRIER SERVICES IS STRICTLY PROHIBITED.