Snipes-Dye associates

PRELIMINARY HYDROMODIFICATION MANAGEMENT PLAN

FOR

PETER RIOS ESTATES APARTMENT COMPLEX

County of San Diego
PDS2014-STP-14-022

Dated: December 11, 2014

Prepared By:
Snipes-Dye Associates
civil engineers and land surveyors
8348 Center Drive, Suite G
La Mesa, CA 91942-2910
619/697-9234, fax 619/460-2033
FS0072

SDC PDS RCVD 05-27-15
STP14-022

PRELIMINARY HYDROMODIFICATION MANAGEMENT PLAN
FOR
PETER RIOS ESTATES APARTMENT COMPLEX

The project is located in Lakeside, on the westerly side of Rios Canyon Road between Kelli Lane and Calle De Ernesto. This Preliminary Hydromodification Management Plan (HMP) was prepared to fulfill the requirements of managing the increases flow and runoff volume to prevent the potential erosion of downstream creeks and channels which may impact to beneficial uses of the receiving water.

The proposed eight building (32-unit) apartment complex development was designed to discharge runoff into two sand filter trench facilities on the parking lot on the westerly portion of the site.

The BMP subdrain pipes are equipped with an orifice which is sized to meet the lower flow threshold ($0.1Q_{2)}$ and a 4-inch riser which is set at the water level of the 10-year storm (Q_{10}).

Unit runoff ratio factors from Table 1-6 of the San Diego BMP Sizing Calculator Methodology were used to calculate the size of the sand filter trench facilities and provided the maximum size of the orifice (0.8 inch diameter) for sand filter trench facility LID No. 1 and (1.1 inch diameter) for sand filter trench facility LID No. 2, which would satisfy the hydromodification control requirements of the County of San Diego Final Hydromodification Management Plan (HMP), dated March 25, 2011. The peak Q_{10} discharge of 0.37 cfs at sand filter trench facility LID No. 1 will reach an elevation of 692.7 before it starts overflowing, while the peak Q_{10} discharge of 0.65 cfs at sand filter trench facility LID No. 2 will reach an elevation of 692.0.

The project input parameters for the San Diego BMP Sizing Spreadsheet are as follows:

1. Lake Wohlford Rainfall Basin (See attached rainfall basin map)
2. Los Coches Creek as the receiving water
3. San Diego River Hydrologic Unit
4. Soil Types "B" and "C" (refer to BMP Sizing Calculator, from the San Diego County SUSMP)
5. Slope is "Moderate (5% to 15%)"
6. No channel susceptibility assessment analysis (low threshold of $0.1Q_2$ – High susceptilbility)
7. Sand filter trench facilities were selected for the project LIDs

As a result of the proposed increase in impervious surface areas, the sand filter trench facilities were sized to handle the required storage volume to mitigate the increased runoff in the post-construction site.

The following is summary for the proposed sand filter trench facilities, including the tributary drainage management areas, the required planting area and storage volume.

Sand Filter Trench (LID No. 1):

Tributary DMA 1 & DMA 2: 0.25 acre of impervious surface.

Tributary DMA 3 & DMA 4: 0.27 acre of pervious surface.

Tributary DMA 5 & DMA 6: 0.27 acre of landscape surface.

Sand filter trench facility required: 526 square feet of plan area, and surface storage of 822 cubic feet.

Proposed Sand Filter Trench Facility has: 540 square feet of plan area, and surface storage capacity of 1,230 cubic feet.

Sand Filter Trench (LID No. 2):

Tributary DMA 7 & DMA 8: 0.49 acre of impervious surface.

Tributary DMA 9 & DMA 10: 0.27 acre of pervious surface.

Tributary DMA 11 & DMA 12: 0.26 acre of landscape surface.

Sand filter trench facility required: 1,001 square feet of plan area, and surface storage of 1,564 cubic feet.

Proposed Sand Filter Trench Facility has: 1,040 square feet of plan area, and surface storage capacity of 2,120 cubic feet.

1.6 Unit Runoff Ratios

Table 1-6 below summarizes unit runoff ratios determined by partial duration analysis for the various combinations of rain gauge, soil type, and slopes studied for the San Diego HMP. HSPF does not explicitly incorporate a time of concentration (Tc) parameter. Instead, HSPF calculated surface runoff travel time across a catchment using the parameters LSUR (length), NSUR (Manning's roughness coefficient), and SLSUR (slope in direction of travel). Varying these time-related parameters does not translate into large variances in the resultant unit peak flow rates since the input rainfall time step of one hour (based on accessible rainfall data) exceeds the travel time (or Tc) for the majority of development projects.

Using the total available rainfall record, peak hourly discharges were calculated and ranked. The recurrence interval was determined using the Cunnane plotting position method.

$$Tr = \frac{n + A}{m - B}$$

Where Tr = recurrence interval

n = number of years of record

m = rank of event

A = 0.2 (constant)

B = 0.4 (constant)

Table 1-6. Unit Runoff Ratios

Rain Gauge	Soil	Cover	Slope	Q_2 (cfs/acre)	Q_{10} (cfs/ac)
Lake Wohlford	A	Scrub	Low	0.136	0.369
Lake Wohlford	A	Scrub	Moderate	0.207	0.416
Lake Wohlford	A	Scrub	Steep	0.244	0.47
Lake Wohlford	B	Scrub	Low	0.208	0.414
Lake Wohlford	B	Scrub	Moderate	0.227	0.448
Lake Wohlford	B	Scrub	Steep	0.253	0.482
Lake Wohlford	C	Scrub	Low	0.245	0.458
Lake Wohlford	C	Scrub	Moderate	0.253	0.481
Lake Wohlford	C	Scrub	Steep	0.302	0.517
Lake Wohlford	D	Scrub	Low	0.253	0.48
Lake Wohlford	D	Scrub	Moderate	0.292	0.516
Lake Wohlford	D	Scrub	Steep	0.351	0.538
Lake Wohlford	A	Urban	Moderate	0.236	0.46

Use of contents on this sheet is subject to the limitations specified at the end of this document.
San Diego BMP Sizing Calculator Report January 2012.docx

Table 1-6. Unit Runoff Ratios					
Rain Gauge	Soil	Cover	Slope	Q_2 (cfs/acre)	Q_{10} (cfs/ac)
Lake Wohlford	B	Urban	Moderate	0.254	0.483
Lake Wohlford	C	Urban	Moderate	0.302	0.517
Lake Wohlford	D	Urban	Moderate	0.353	0.539
Lake Wohlford	Impervious		Moderate	0.555	0.773
Oceanside	A	Scrub	Low	0.035	0.32
Oceanside	A	Scrub	Moderate	0.093	0.367
Oceanside	A	Scrub	Steep	0.163	0.42
Oceanside	B	Scrub	Low	0.08	0.365
Oceanside	B	Scrub	Moderate	0.134	0.4
Oceanside	B	Scrub	Steep	0.181	0.433
Oceanside	C	Scrub	Low	0.146	0.411
Oceanside	C	Scrub	Moderate	0.185	0.433
Oceanside	C	Scrub	Steep	0.217	0.458
Oceanside	D	Scrub	Low	0.175	0.434
Oceanside	D	Scrub	Moderate	0.212	0.455
Oceanside	D	Scrub	Steep	0.244	0.571
Oceanside	A	Urban	Moderate	0.152	0.411
Oceanside	B	Urban	Moderate	0.188	0.434
Oceanside	C	Urban	Moderate	0.216	0.458
Oceanside	D	Urban	Moderate	0.247	0.571
Oceanside	Impervious		Moderate	0.557	0.949
Lindbergh	A	Scrub	Low	0.003	0.081
Lindbergh	A	Scrub	Moderate	0.018	0.137
Lindbergh	A	Scrub	Steep	0.061	0.211
Lindbergh	B	Scrub	Low	0.011	0.134
Lindbergh	B	Scrub	Moderate	0.033	0.174
Lindbergh	B	Scrub	Steep	0.077	0.23
Lindbergh	C	Scrub	Low	0.028	0.19

Use of contents on this sheet is subject to the limitations specified at the end of this document.
San Diego BMP Sizing Calculator Report January 2012.docx

Table 1-6. Unit Runoff Ratios					
Rain Gauge	Soil	Cover	Slope	Q_2 (cfs/acre)	Q_{10} (cfs/ac)
Lindbergh	C	Scrub	Moderate	0.075	0.232
Lindbergh	C	Scrub	Steep	0.108	0.274
Lindbergh	D	Scrub	Low	0.05	0.228
Lindbergh	D	Scrub	Moderate	0.104	0.266
Lindbergh	D	Scrub	Steep	0.143	0.319
Lindbergh	A	Urban	Moderate	0.046	0.194
Lindbergh	B	Urban	Moderate	0.078	0.235
Lindbergh	C	Urban	Moderate	0.107	0.271
Lindbergh	D	Urban	Moderate	0.145	0.32
Lindbergh	Impervious		Moderate	0.512	0.749

1.7 Sensitivity Analysis

Brown and Caldwell conducted a sensitivity analysis in January 2011 to compare sizing factors calculated with hourly rainfall data to sizing factors calculated with limited 15-minute rainfall data. The analysis suggests that the 'flat' slope category can be eliminated for Group C and D soils and that the 'flat' sizing factor can be reduced in Group B soils. The following is a summary of the sensitivity analysis method and results:

- The $0.5Q_2$ bioretention sizing factors were computed using the Oceanside 15-minute gauge (1976-1992) across the three slope and four soil groups. These factors were generally a little smaller than the factors computed using the longer hourly records for the same gauge (1960-2004).
- To make the 15-minute and hourly results more comparable, the bioretention hourly sizing factors were recomputed – using just the period from 1976-1992.
- The 'flat' sizing factors computed using 15-minute records are very similar to the 'moderate' sizing factors computed using the hourly time series for C, D soils. For Group B soils, the 'flat' sizing factor computed with the 15-minute data is half way between the 'flat' and 'moderate' value computed with the hourly data. The main reason is that the simulated Q_2 values are higher using the 15-minute record.
- For most soil/slope/cover combinations, the Q2 values computed from the 15-minute Oceanside gauge time steps is 2.5 to 3.0 times higher than Q2 values computed from the hourly input data.

Based on the results of the sensitivity analysis, Brown and Caldwell recommend setting 'flat' sizing factors equal to the 'moderate' sizing factor values for the Group C, D soil conditions and revising the Group B 'flat' sizing factors to equal the current average of the 'flat' and 'moderate' values.

The sensitivity analysis focused on whether 15-minute time step simulations would produce higher Q2 values and thus larger flow control orifice diameters in Group C and D soils (plus Group B soils for the

Use of contents on this sheet is subject to the limitations specified at the end of this document.
San Diego BMP Sizing Calculator Report January 2012.docx

Sizing Low Flow Orifice

(1) $Q = C_d \times A \times (2gH)^{0.5}$ Orifice Discharge Equation

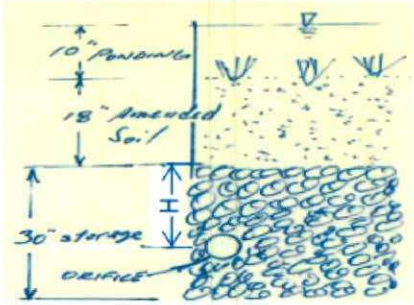

C_d = Orifice Coefficient = 0.60 (sharp, clean edge)

H = Water Head above orifice

g = Gravitational Acceleration = 32.2 ft/s^2

A = Area of the Orifice

(2) $A = [0.1Q_2 \times A_{DMA}]/C_d \times (2gH)^{0.5}$

Q_2 = 2-year Storm Unit Runoff (Per Table 1-6 of 2012 San Diego BMP Sizing Calculator Methodology)

A_{DMA} = Area of the Drainage Management Area (DMA)

DMA	Rain Gauge	Soil Type	Cover	Slope	H (ft)	Q_2 Unit Runoff	A_{DMA} (SF)	A_{DMA} (Acres)	$0.1Q_2$	Max. Orifice Area (inch^2)	Orifice Diameter (inches)	Q_{10} Unit Runoff (cfs/acre)	Q_{10} (cfs)
1	Lake wolford	C	Scrub	Moderate	1.00	0.253	10465	0.24	0.0061	0.18	**0.48**	0.481	0.1156
2	Lake wolford	B	Scrub	Moderate	1.00	0.227	351	0.01	0.0002	0.01	**0.08**	0.448	0.0036
3	Lake wolford	C	Scrub	Moderate	1.00	0.253	6912	0.16	0.004	0.12	**0.39**	0.481	0.0763
4	Lake wolford	B	Scrub	Moderate	1.00	0.227	4671	0.11	0.0024	0.07	**0.30**	0.448	0.0480
5	Lake wolford	C	Scrub	Moderate	1.00	0.253	9777	0.22	0.0057	0.17	**0.47**	0.481	0.1080
6	Lake wolford	B	Scrub	Moderate	1.00	0.227	1988	0.05	0.001	0.03	**0.20**	0.448	0.0204

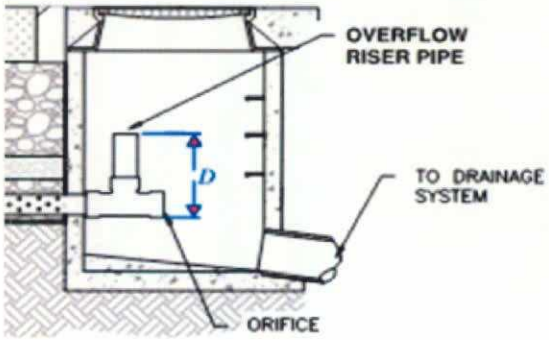

FLOW CONTROL FOR LID NO. 1		
Lower Flow Threshold =	0.0194	cfs
Peak Q_{10} =	0.3719	cfs
Max Orifice Diameter Allowed =	0.860	inch
Proposed Diameter =	0.8	inch
Distance Riser above orifice (D) =	2.2	feet Min.

Prepared by:
Snipes-Dye Associates

12/3/2014

Hydrograph Report

Hydraflow Hydrographs by Intelisolve

Hyd. No. 6

LID 1

Hydrograph type	= Reservoir	Peak discharge	= 0.02 cfs
Storm frequency	= 10 yrs	Time interval	= 1 min
Inflow hyd. No.	= 5	Reservoir name	= LID 1
Max. Elevation	= 692.69 ft	Max. Storage	= 241 cuft

Storage Indication method used.

Outflow hydrograph volume = 262 cuft

Hydrograph Discharge Table

Time (min)	Inflow cfs	Elevation ft	Clv A cfs	Clv B cfs	Clv C cfs	Clv D cfs	Wr A cfs	Wr B cfs	Wr C cfs	Wr D cfs	Exfil cfs	Outflow cfs
2	0.06	690.55	0.00	-----	-----	-----	-----	-----	-----	-----	-----	0.00
3	0.09	690.62	0.00	-----	-----	-----	-----	-----	-----	-----	-----	0.00
4	0.12	690.71	0.01	-----	-----	-----	-----	-----	-----	-----	-----	0.01
5	0.15	690.82	0.01	-----	-----	-----	-----	-----	-----	-----	-----	0.01
6	0.18	690.96	0.01	-----	-----	-----	-----	-----	-----	-----	-----	0.01
7	0.21	691.06	0.01	-----	-----	-----	-----	-----	-----	-----	-----	0.01
8	0.24	691.16	0.01	-----	-----	-----	-----	-----	-----	-----	-----	0.01
9	0.27	691.27	0.01	-----	-----	-----	-----	-----	-----	-----	-----	0.01
10	0.30	691.39	0.02	-----	-----	-----	-----	-----	-----	-----	-----	0.02
11	0.34	691.53	0.02	-----	-----	-----	-----	-----	-----	-----	-----	0.02
12	0.37 <<	691.67	0.02	-----	-----	-----	-----	-----	-----	-----	-----	0.02
13	0.34	691.82	0.02	-----	-----	-----	-----	-----	-----	-----	-----	0.02
14	0.30	691.95	0.02	-----	-----	-----	-----	-----	-----	-----	-----	0.02
15	0.27	692.09	0.02	-----	-----	-----	-----	-----	-----	-----	-----	0.02
16	0.24	692.22	0.02	-----	-----	-----	-----	-----	-----	-----	-----	0.02
17	0.21	692.33	0.02	-----	-----	-----	-----	-----	-----	-----	-----	0.02
18	0.18	692.43	0.02	-----	-----	-----	-----	-----	-----	-----	-----	0.02
19	0.15	692.51	0.02	-----	-----	-----	-----	-----	-----	-----	-----	0.02
20	0.12	692.59	0.02	-----	-----	-----	-----	-----	-----	-----	-----	0.02
21	0.09	692.64	0.02	-----	-----	-----	-----	-----	-----	-----	-----	0.02
22	0.06	692.68	0.02	-----	-----	-----	-----	-----	-----	-----	-----	0.02
23	0.03	692.69 <<	0.02	-----	-----	-----	-----	-----	-----	-----	-----	0.02 <<
24	0.00	692.69	0.02	-----	-----	-----	-----	-----	-----	-----	-----	0.02
25	0.00	692.67	0.02	-----	-----	-----	-----	-----	-----	-----	-----	0.02
26	0.00	692.65	0.02	-----	-----	-----	-----	-----	-----	-----	-----	0.02
27	0.00	692.64	0.02	-----	-----	-----	-----	-----	-----	-----	-----	0.02
28	0.00	692.62	0.02	-----	-----	-----	-----	-----	-----	-----	-----	0.02
29	0.00	692.60	0.02	-----	-----	-----	-----	-----	-----	-----	-----	0.02
30	0.00	692.58	0.02	-----	-----	-----	-----	-----	-----	-----	-----	0.02
31	0.00	692.57	0.02	-----	-----	-----	-----	-----	-----	-----	-----	0.02
32	0.00	692.55	0.02	-----	-----	-----	-----	-----	-----	-----	-----	0.02
33	0.00	692.53	0.02	-----	-----	-----	-----	-----	-----	-----	-----	0.02
34	0.00	692.52	0.02	-----	-----	-----	-----	-----	-----	-----	-----	0.02
35	0.00	692.50	0.02	-----	-----	-----	-----	-----	-----	-----	-----	0.02
36	0.00	692.49	0.02	-----	-----	-----	-----	-----	-----	-----	-----	0.02
37	0.00	692.48	0.02	-----	-----	-----	-----	-----	-----	-----	-----	0.02
38	0.00	692.46	0.02	-----	-----	-----	-----	-----	-----	-----	-----	0.02
39	0.00	692.45	0.02	-----	-----	-----	-----	-----	-----	-----	-----	0.02

10-yr Storm Water Surface in LID No. 1

Continues on next page...

Hydrograph Discharge Table

Time (min)	Inflow cfs	Elevation ft	Clv A cfs	Clv B cfs	Clv C cfs	Clv D cfs	Wr A cfs	Wr B cfs	Wr C cfs	Wr D cfs	Exfil cfs	Outflow cfs
40	0.00	692.44	0.02	-----	-----	-----	-----	-----	-----	-----	-----	0.02
41	0.00	692.43	0.02	-----	-----	-----	-----	-----	-----	-----	-----	0.02
42	0.00	692.41	0.02	-----	-----	-----	-----	-----	-----	-----	-----	0.02
43	0.00	692.40	0.02	-----	-----	-----	-----	-----	-----	-----	-----	0.02
44	0.00	692.39	0.02	-----	-----	-----	-----	-----	-----	-----	-----	0.02
45	0.00	692.38	0.02	-----	-----	-----	-----	-----	-----	-----	-----	0.02
46	0.00	692.36	0.02	-----	-----	-----	-----	-----	-----	-----	-----	0.02
47	0.00	692.35	0.02	-----	-----	-----	-----	-----	-----	-----	-----	0.02
48	0.00	692.34	0.02	-----	-----	-----	-----	-----	-----	-----	-----	0.02
49	0.00	692.33	0.02	-----	-----	-----	-----	-----	-----	-----	-----	0.02
50	0.00	692.31	0.02	-----	-----	-----	-----	-----	-----	-----	-----	0.02
51	0.00	692.30	0.02	-----	-----	-----	-----	-----	-----	-----	-----	0.02
52	0.00	692.29	0.02	-----	-----	-----	-----	-----	-----	-----	-----	0.02
53	0.00	692.28	0.02	-----	-----	-----	-----	-----	-----	-----	-----	0.02
54	0.00	692.27	0.02	-----	-----	-----	-----	-----	-----	-----	-----	0.02
55	0.00	692.25	0.02	-----	-----	-----	-----	-----	-----	-----	-----	0.02
56	0.00	692.24	0.02	-----	-----	-----	-----	-----	-----	-----	-----	0.02
57	0.00	692.23	0.02	-----	-----	-----	-----	-----	-----	-----	-----	0.02
58	0.00	692.22	0.02	-----	-----	-----	-----	-----	-----	-----	-----	0.02
59	0.00	692.21	0.02	-----	-----	-----	-----	-----	-----	-----	-----	0.02
60	0.00	692.19	0.02	-----	-----	-----	-----	-----	-----	-----	-----	0.02
61	0.00	692.18	0.02	-----	-----	-----	-----	-----	-----	-----	-----	0.02
62	0.00	692.17	0.02	-----	-----	-----	-----	-----	-----	-----	-----	0.02
63	0.00	692.16	0.02	-----	-----	-----	-----	-----	-----	-----	-----	0.02
64	0.00	692.15	0.02	-----	-----	-----	-----	-----	-----	-----	-----	0.02
65	0.00	692.14	0.02	-----	-----	-----	-----	-----	-----	-----	-----	0.02
66	0.00	692.12	0.02	-----	-----	-----	-----	-----	-----	-----	-----	0.02
67	0.00	692.11	0.02	-----	-----	-----	-----	-----	-----	-----	-----	0.02
68	0.00	692.10	0.02	-----	-----	-----	-----	-----	-----	-----	-----	0.02
69	0.00	692.09	0.02	-----	-----	-----	-----	-----	-----	-----	-----	0.02
70	0.00	692.08	0.02	-----	-----	-----	-----	-----	-----	-----	-----	0.02
71	0.00	692.07	0.02	-----	-----	-----	-----	-----	-----	-----	-----	0.02
72	0.00	692.06	0.02	-----	-----	-----	-----	-----	-----	-----	-----	0.02
73	0.00	692.05	0.02	-----	-----	-----	-----	-----	-----	-----	-----	0.02
74	0.00	692.03	0.02	-----	-----	-----	-----	-----	-----	-----	-----	0.02
75	0.00	692.02	0.02	-----	-----	-----	-----	-----	-----	-----	-----	0.02
76	0.00	692.01	0.02	-----	-----	-----	-----	-----	-----	-----	-----	0.02
77	0.00	692.00	0.02	-----	-----	-----	-----	-----	-----	-----	-----	0.02
78	0.00	691.99	0.02	-----	-----	-----	-----	-----	-----	-----	-----	0.02
79	0.00	691.98	0.02	-----	-----	-----	-----	-----	-----	-----	-----	0.02
80	0.00	691.97	0.02	-----	-----	-----	-----	-----	-----	-----	-----	0.02
81	0.00	691.96	0.02	-----	-----	-----	-----	-----	-----	-----	-----	0.02
82	0.00	691.96	0.02	-----	-----	-----	-----	-----	-----	-----	-----	0.02
83	0.00	691.95	0.02	-----	-----	-----	-----	-----	-----	-----	-----	0.02
84	0.00	691.94	0.02	-----	-----	-----	-----	-----	-----	-----	-----	0.02
85	0.00	691.93	0.02	-----	-----	-----	-----	-----	-----	-----	-----	0.02
86	0.00	691.92	0.02	-----	-----	-----	-----	-----	-----	-----	-----	0.02
87	0.00	691.91	0.02	-----	-----	-----	-----	-----	-----	-----	-----	0.02
88	0.00	691.90	0.02	-----	-----	-----	-----	-----	-----	-----	-----	0.02
89	0.00	691.89	0.02	-----	-----	-----	-----	-----	-----	-----	-----	0.02
90	0.00	691.89	0.02	-----	-----	-----	-----	-----	-----	-----	-----	0.02

Continues on next page...

Hydrograph Discharge Table

Time (min)	Inflow cfs	Elevation ft	Clv A cfs	Clv B cfs	Clv C cfs	Clv D cfs	Wr A cfs	Wr B cfs	Wr C cfs	Wr D cfs	Exfil cfs	Outflow cfs
91	0.00	691.88	0.02	-----	-----	-----	-----	-----	-----	-----	-----	0.02
92	0.00	691.87	0.02	-----	-----	-----	-----	-----	-----	-----	-----	0.02
93	0.00	691.86	0.02	-----	-----	-----	-----	-----	-----	-----	-----	0.02
94	0.00	691.85	0.02	-----	-----	-----	-----	-----	-----	-----	-----	0.02
95	0.00	691.84	0.02	-----	-----	-----	-----	-----	-----	-----	-----	0.02
96	0.00	691.83	0.02	-----	-----	-----	-----	-----	-----	-----	-----	0.02
97	0.00	691.83	0.02	-----	-----	-----	-----	-----	-----	-----	-----	0.02
98	0.00	691.82	0.02	-----	-----	-----	-----	-----	-----	-----	-----	0.02
99	0.00	691.81	0.02	-----	-----	-----	-----	-----	-----	-----	-----	0.02
100	0.00	691.80	0.02	-----	-----	-----	-----	-----	-----	-----	-----	0.02
101	0.00	691.79	0.02	-----	-----	-----	-----	-----	-----	-----	-----	0.02
102	0.00	691.78	0.02	-----	-----	-----	-----	-----	-----	-----	-----	0.02
103	0.00	691.77	0.02	-----	-----	-----	-----	-----	-----	-----	-----	0.02
104	0.00	691.77	0.02	-----	-----	-----	-----	-----	-----	-----	-----	0.02
105	0.00	691.76	0.02	-----	-----	-----	-----	-----	-----	-----	-----	0.02
106	0.00	691.75	0.02	-----	-----	-----	-----	-----	-----	-----	-----	0.02
107	0.00	691.74	0.02	-----	-----	-----	-----	-----	-----	-----	-----	0.02
108	0.00	691.73	0.02	-----	-----	-----	-----	-----	-----	-----	-----	0.02
109	0.00	691.73	0.02	-----	-----	-----	-----	-----	-----	-----	-----	0.02
110	0.00	691.72	0.02	-----	-----	-----	-----	-----	-----	-----	-----	0.02
111	0.00	691.71	0.02	-----	-----	-----	-----	-----	-----	-----	-----	0.02
112	0.00	691.70	0.02	-----	-----	-----	-----	-----	-----	-----	-----	0.02
113	0.00	691.69	0.02	-----	-----	-----	-----	-----	-----	-----	-----	0.02
114	0.00	691.68	0.02	-----	-----	-----	-----	-----	-----	-----	-----	0.02
115	0.00	691.68	0.02	-----	-----	-----	-----	-----	-----	-----	-----	0.02
116	0.00	691.67	0.02	-----	-----	-----	-----	-----	-----	-----	-----	0.02
117	0.00	691.66	0.02	-----	-----	-----	-----	-----	-----	-----	-----	0.02
118	0.00	691.65	0.02	-----	-----	-----	-----	-----	-----	-----	-----	0.02
119	0.00	691.65	0.02	-----	-----	-----	-----	-----	-----	-----	-----	0.02
120	0.00	691.64	0.02	-----	-----	-----	-----	-----	-----	-----	-----	0.02
121	0.00	691.63	0.02	-----	-----	-----	-----	-----	-----	-----	-----	0.02
122	0.00	691.62	0.02	-----	-----	-----	-----	-----	-----	-----	-----	0.02
123	0.00	691.61	0.02	-----	-----	-----	-----	-----	-----	-----	-----	0.02
124	0.00	691.61	0.02	-----	-----	-----	-----	-----	-----	-----	-----	0.02
125	0.00	691.60	0.02	-----	-----	-----	-----	-----	-----	-----	-----	0.02
126	0.00	691.59	0.02	-----	-----	-----	-----	-----	-----	-----	-----	0.02
127	0.00	691.58	0.02	-----	-----	-----	-----	-----	-----	-----	-----	0.02
128	0.00	691.58	0.02	-----	-----	-----	-----	-----	-----	-----	-----	0.02
129	0.00	691.57	0.02	-----	-----	-----	-----	-----	-----	-----	-----	0.02
130	0.00	691.56	0.02	-----	-----	-----	-----	-----	-----	-----	-----	0.02
131	0.00	691.55	0.02	-----	-----	-----	-----	-----	-----	-----	-----	0.02
132	0.00	691.55	0.02	-----	-----	-----	-----	-----	-----	-----	-----	0.02
133	0.00	691.54	0.02	-----	-----	-----	-----	-----	-----	-----	-----	0.02
134	0.00	691.53	0.02	-----	-----	-----	-----	-----	-----	-----	-----	0.02
135	0.00	691.52	0.02	-----	-----	-----	-----	-----	-----	-----	-----	0.02
136	0.00	691.52	0.02	-----	-----	-----	-----	-----	-----	-----	-----	0.02
137	0.00	691.51	0.02	-----	-----	-----	-----	-----	-----	-----	-----	0.02
138	0.00	691.50	0.02	-----	-----	-----	-----	-----	-----	-----	-----	0.02
139	0.00	691.49	0.02	-----	-----	-----	-----	-----	-----	-----	-----	0.02
140	0.00	691.49	0.02	-----	-----	-----	-----	-----	-----	-----	-----	0.02
141	0.00	691.48	0.02	-----	-----	-----	-----	-----	-----	-----	-----	0.02

Continues on next page...

Hydrograph Discharge Table

Time (min)	Inflow cfs	Elevation ft	Clv A cfs	Clv B cfs	Clv C cfs	Clv D cfs	Wr A cfs	Wr B cfs	Wr C cfs	Wr D cfs	Exfil cfs	Outflow cfs
142	0.00	691.47	0.02	-----	-----	-----	-----	-----	-----	-----	-----	0.02
143	0.00	691.46	0.02	-----	-----	-----	-----	-----	-----	-----	-----	0.02
144	0.00	691.46	0.02	-----	-----	-----	-----	-----	-----	-----	-----	0.02
145	0.00	691.45	0.02	-----	-----	-----	-----	-----	-----	-----	-----	0.02
146	0.00	691.44	0.02	-----	-----	-----	-----	-----	-----	-----	-----	0.02
147	0.00	691.44	0.02	-----	-----	-----	-----	-----	-----	-----	-----	0.02
148	0.00	691.43	0.02	-----	-----	-----	-----	-----	-----	-----	-----	0.02
149	0.00	691.42	0.02	-----	-----	-----	-----	-----	-----	-----	-----	0.02
150	0.00	691.41	0.02	-----	-----	-----	-----	-----	-----	-----	-----	0.02
151	0.00	691.41	0.02	-----	-----	-----	-----	-----	-----	-----	-----	0.02
152	0.00	691.40	0.02	-----	-----	-----	-----	-----	-----	-----	-----	0.02
153	0.00	691.39	0.02	-----	-----	-----	-----	-----	-----	-----	-----	0.02
154	0.00	691.39	0.02	-----	-----	-----	-----	-----	-----	-----	-----	0.02
155	0.00	691.38	0.02	-----	-----	-----	-----	-----	-----	-----	-----	0.02
156	0.00	691.37	0.02	-----	-----	-----	-----	-----	-----	-----	-----	0.02
157	0.00	691.37	0.02	-----	-----	-----	-----	-----	-----	-----	-----	0.02
158	0.00	691.36	0.02	-----	-----	-----	-----	-----	-----	-----	-----	0.02
159	0.00	691.35	0.02	-----	-----	-----	-----	-----	-----	-----	-----	0.02
160	0.00	691.35	0.02	-----	-----	-----	-----	-----	-----	-----	-----	0.02
161	0.00	691.34	0.02	-----	-----	-----	-----	-----	-----	-----	-----	0.02
162	0.00	691.33	0.02	-----	-----	-----	-----	-----	-----	-----	-----	0.02
163	0.00	691.33	0.01	-----	-----	-----	-----	-----	-----	-----	-----	0.01
164	0.00	691.32	0.01	-----	-----	-----	-----	-----	-----	-----	-----	0.01
165	0.00	691.31	0.01	-----	-----	-----	-----	-----	-----	-----	-----	0.01
166	0.00	691.31	0.01	-----	-----	-----	-----	-----	-----	-----	-----	0.01
167	0.00	691.30	0.01	-----	-----	-----	-----	-----	-----	-----	-----	0.01
168	0.00	691.29	0.01	-----	-----	-----	-----	-----	-----	-----	-----	0.01
169	0.00	691.29	0.01	-----	-----	-----	-----	-----	-----	-----	-----	0.01
170	0.00	691.28	0.01	-----	-----	-----	-----	-----	-----	-----	-----	0.01
171	0.00	691.27	0.01	-----	-----	-----	-----	-----	-----	-----	-----	0.01
172	0.00	691.27	0.01	-----	-----	-----	-----	-----	-----	-----	-----	0.01
173	0.00	691.26	0.01	-----	-----	-----	-----	-----	-----	-----	-----	0.01
174	0.00	691.25	0.01	-----	-----	-----	-----	-----	-----	-----	-----	0.01
175	0.00	691.25	0.01	-----	-----	-----	-----	-----	-----	-----	-----	0.01
176	0.00	691.24	0.01	-----	-----	-----	-----	-----	-----	-----	-----	0.01
177	0.00	691.24	0.01	-----	-----	-----	-----	-----	-----	-----	-----	0.01
178	0.00	691.23	0.01	-----	-----	-----	-----	-----	-----	-----	-----	0.01
179	0.00	691.22	0.01	-----	-----	-----	-----	-----	-----	-----	-----	0.01
180	0.00	691.22	0.01	-----	-----	-----	-----	-----	-----	-----	-----	0.01
181	0.00	691.21	0.01	-----	-----	-----	-----	-----	-----	-----	-----	0.01
182	0.00	691.20	0.01	-----	-----	-----	-----	-----	-----	-----	-----	0.01
183	0.00	691.20	0.01	-----	-----	-----	-----	-----	-----	-----	-----	0.01
184	0.00	691.19	0.01	-----	-----	-----	-----	-----	-----	-----	-----	0.01
185	0.00	691.19	0.01	-----	-----	-----	-----	-----	-----	-----	-----	0.01
186	0.00	691.18	0.01	-----	-----	-----	-----	-----	-----	-----	-----	0.01
187	0.00	691.17	0.01	-----	-----	-----	-----	-----	-----	-----	-----	0.01
188	0.00	691.17	0.01	-----	-----	-----	-----	-----	-----	-----	-----	0.01
189	0.00	691.16	0.01	-----	-----	-----	-----	-----	-----	-----	-----	0.01
190	0.00	691.16	0.01	-----	-----	-----	-----	-----	-----	-----	-----	0.01
191	0.00	691.15	0.01	-----	-----	-----	-----	-----	-----	-----	-----	0.01
192	0.00	691.14	0.01	-----	-----	-----	-----	-----	-----	-----	-----	0.01

Continues on next page...

Hydrograph Discharge Table

Time (min)	Inflow cfs	Elevation ft	Clv A cfs	Clv B cfs	Clv C cfs	Clv D cfs	Wr A cfs	Wr B cfs	Wr C cfs	Wr D cfs	Exfil cfs	Outflow cfs
193	0.00	691.14	0.01	-----	-----	-----	-----	-----	-----	-----	-----	0.01
194	0.00	691.13	0.01	-----	-----	-----	-----	-----	-----	-----	-----	0.01
195	0.00	691.13	0.01	-----	-----	-----	-----	-----	-----	-----	-----	0.01
196	0.00	691.12	0.01	-----	-----	-----	-----	-----	-----	-----	-----	0.01
197	0.00	691.12	0.01	-----	-----	-----	-----	-----	-----	-----	-----	0.01
198	0.00	691.11	0.01	-----	-----	-----	-----	-----	-----	-----	-----	0.01
199	0.00	691.10	0.01	-----	-----	-----	-----	-----	-----	-----	-----	0.01
200	0.00	691.10	0.01	-----	-----	-----	-----	-----	-----	-----	-----	0.01
201	0.00	691.09	0.01	-----	-----	-----	-----	-----	-----	-----	-----	0.01
202	0.00	691.09	0.01	-----	-----	-----	-----	-----	-----	-----	-----	0.01
203	0.00	691.08	0.01	-----	-----	-----	-----	-----	-----	-----	-----	0.01
204	0.00	691.08	0.01	-----	-----	-----	-----	-----	-----	-----	-----	0.01
205	0.00	691.07	0.01	-----	-----	-----	-----	-----	-----	-----	-----	0.01
206	0.00	691.07	0.01	-----	-----	-----	-----	-----	-----	-----	-----	0.01
207	0.00	691.06	0.01	-----	-----	-----	-----	-----	-----	-----	-----	0.01
208	0.00	691.05	0.01	-----	-----	-----	-----	-----	-----	-----	-----	0.01
209	0.00	691.05	0.01	-----	-----	-----	-----	-----	-----	-----	-----	0.01
210	0.00	691.04	0.01	-----	-----	-----	-----	-----	-----	-----	-----	0.01
211	0.00	691.04	0.01	-----	-----	-----	-----	-----	-----	-----	-----	0.01
212	0.00	691.03	0.01	-----	-----	-----	-----	-----	-----	-----	-----	0.01
213	0.00	691.03	0.01	-----	-----	-----	-----	-----	-----	-----	-----	0.01
214	0.00	691.02	0.01	-----	-----	-----	-----	-----	-----	-----	-----	0.01
215	0.00	691.02	0.01	-----	-----	-----	-----	-----	-----	-----	-----	0.01
216	0.00	691.01	0.01	-----	-----	-----	-----	-----	-----	-----	-----	0.01
217	0.00	691.01	0.01	-----	-----	-----	-----	-----	-----	-----	-----	0.01
218	0.00	691.00	0.01	-----	-----	-----	-----	-----	-----	-----	-----	0.01
219	0.00	690.99	0.01	-----	-----	-----	-----	-----	-----	-----	-----	0.01
220	0.00	690.98	0.01	-----	-----	-----	-----	-----	-----	-----	-----	0.01
221	0.00	690.97	0.01	-----	-----	-----	-----	-----	-----	-----	-----	0.01
222	0.00	690.96	0.01	-----	-----	-----	-----	-----	-----	-----	-----	0.01
223	0.00	690.95	0.01	-----	-----	-----	-----	-----	-----	-----	-----	0.01
224	0.00	690.94	0.01	-----	-----	-----	-----	-----	-----	-----	-----	0.01
225	0.00	690.94	0.01	-----	-----	-----	-----	-----	-----	-----	-----	0.01
226	0.00	690.93	0.01	-----	-----	-----	-----	-----	-----	-----	-----	0.01
227	0.00	690.92	0.01	-----	-----	-----	-----	-----	-----	-----	-----	0.01
228	0.00	690.91	0.01	-----	-----	-----	-----	-----	-----	-----	-----	0.01
229	0.00	690.90	0.01	-----	-----	-----	-----	-----	-----	-----	-----	0.01
230	0.00	690.89	0.01	-----	-----	-----	-----	-----	-----	-----	-----	0.01
231	0.00	690.88	0.01	-----	-----	-----	-----	-----	-----	-----	-----	0.01
232	0.00	690.87	0.01	-----	-----	-----	-----	-----	-----	-----	-----	0.01
233	0.00	690.86	0.01	-----	-----	-----	-----	-----	-----	-----	-----	0.01
234	0.00	690.85	0.01	-----	-----	-----	-----	-----	-----	-----	-----	0.01
235	0.00	690.85	0.01	-----	-----	-----	-----	-----	-----	-----	-----	0.01
236	0.00	690.84	0.01	-----	-----	-----	-----	-----	-----	-----	-----	0.01
237	0.00	690.83	0.01	-----	-----	-----	-----	-----	-----	-----	-----	0.01
238	0.00	690.82	0.01	-----	-----	-----	-----	-----	-----	-----	-----	0.01
239	0.00	690.81	0.01	-----	-----	-----	-----	-----	-----	-----	-----	0.01
240	0.00	690.81	0.01	-----	-----	-----	-----	-----	-----	-----	-----	0.01
241	0.00	690.80	0.01	-----	-----	-----	-----	-----	-----	-----	-----	0.01
242	0.00	690.79	0.01	-----	-----	-----	-----	-----	-----	-----	-----	0.01
243	0.00	690.78	0.01	-----	-----	-----	-----	-----	-----	-----	-----	0.01

Continues on next page...

Hydrograph Discharge Table

Time (min)	Inflow cfs	Elevation ft	Clv A cfs	Clv B cfs	Clv C cfs	Clv D cfs	Wr A cfs	Wr B cfs	Wr C cfs	Wr D cfs	Exfil cfs	Outflow cfs
244	0.00	690.78	0.01	-----	-----	-----	-----	-----	-----	-----	-----	0.01
245	0.00	690.77	0.01	-----	-----	-----	-----	-----	-----	-----	-----	0.01
246	0.00	690.76	0.01	-----	-----	-----	-----	-----	-----	-----	-----	0.01
247	0.00	690.75	0.01	-----	-----	-----	-----	-----	-----	-----	-----	0.01
248	0.00	690.75	0.01	-----	-----	-----	-----	-----	-----	-----	-----	0.01
249	0.00	690.74	0.01	-----	-----	-----	-----	-----	-----	-----	-----	0.01
250	0.00	690.73	0.01	-----	-----	-----	-----	-----	-----	-----	-----	0.01
251	0.00	690.73	0.01	-----	-----	-----	-----	-----	-----	-----	-----	0.01
252	0.00	690.72	0.01	-----	-----	-----	-----	-----	-----	-----	-----	0.01
253	0.00	690.71	0.01	-----	-----	-----	-----	-----	-----	-----	-----	0.01
254	0.00	690.71	0.01	-----	-----	-----	-----	-----	-----	-----	-----	0.01
255	0.00	690.70	0.01	-----	-----	-----	-----	-----	-----	-----	-----	0.01
256	0.00	690.70	0.01	-----	-----	-----	-----	-----	-----	-----	-----	0.01
257	0.00	690.69	0.01	-----	-----	-----	-----	-----	-----	-----	-----	0.01
258	0.00	690.68	0.01	-----	-----	-----	-----	-----	-----	-----	-----	0.01
259	0.00	690.68	0.01	-----	-----	-----	-----	-----	-----	-----	-----	0.01
260	0.00	690.67	0.01	-----	-----	-----	-----	-----	-----	-----	-----	0.01
261	0.00	690.67	0.01	-----	-----	-----	-----	-----	-----	-----	-----	0.01
262	0.00	690.66	0.01	-----	-----	-----	-----	-----	-----	-----	-----	0.01
263	0.00	690.66	0.01	-----	-----	-----	-----	-----	-----	-----	-----	0.01
264	0.00	690.65	0.01	-----	-----	-----	-----	-----	-----	-----	-----	0.01
265	0.00	690.65	0.01	-----	-----	-----	-----	-----	-----	-----	-----	0.01
266	0.00	690.64	0.01	-----	-----	-----	-----	-----	-----	-----	-----	0.01
267	0.00	690.64	0.01	-----	-----	-----	-----	-----	-----	-----	-----	0.01
268	0.00	690.63	0.01	-----	-----	-----	-----	-----	-----	-----	-----	0.01
269	0.00	690.63	0.01	-----	-----	-----	-----	-----	-----	-----	-----	0.01
270	0.00	690.62	0.00	-----	-----	-----	-----	-----	-----	-----	-----	0.00
271	0.00	690.62	0.00	-----	-----	-----	-----	-----	-----	-----	-----	0.00
272	0.00	690.61	0.00	-----	-----	-----	-----	-----	-----	-----	-----	0.00
273	0.00	690.61	0.00	-----	-----	-----	-----	-----	-----	-----	-----	0.00
274	0.00	690.61	0.00	-----	-----	-----	-----	-----	-----	-----	-----	0.00
275	0.00	690.60	0.00	-----	-----	-----	-----	-----	-----	-----	-----	0.00
276	0.00	690.60	0.00	-----	-----	-----	-----	-----	-----	-----	-----	0.00
277	0.00	690.59	0.00	-----	-----	-----	-----	-----	-----	-----	-----	0.00
278	0.00	690.59	0.00	-----	-----	-----	-----	-----	-----	-----	-----	0.00
279	0.00	690.59	0.00	-----	-----	-----	-----	-----	-----	-----	-----	0.00
280	0.00	690.58	0.00	-----	-----	-----	-----	-----	-----	-----	-----	0.00
281	0.00	690.58	0.00	-----	-----	-----	-----	-----	-----	-----	-----	0.00
282	0.00	690.58	0.00	-----	-----	-----	-----	-----	-----	-----	-----	0.00
283	0.00	690.57	0.00	-----	-----	-----	-----	-----	-----	-----	-----	0.00
284	0.00	690.57	0.00	-----	-----	-----	-----	-----	-----	-----	-----	0.00
285	0.00	690.57	0.00	-----	-----	-----	-----	-----	-----	-----	-----	0.00
286	0.00	690.57	0.00	-----	-----	-----	-----	-----	-----	-----	-----	0.00
287	0.00	690.56	0.00	-----	-----	-----	-----	-----	-----	-----	-----	0.00
288	0.00	690.56	0.00	-----	-----	-----	-----	-----	-----	-----	-----	0.00
289	0.00	690.56	0.00	-----	-----	-----	-----	-----	-----	-----	-----	0.00
290	0.00	690.56	0.00	-----	-----	-----	-----	-----	-----	-----	-----	0.00
291	0.00	690.56	0.00	-----	-----	-----	-----	-----	-----	-----	-----	0.00
292	0.00	690.55	0.00	-----	-----	-----	-----	-----	-----	-----	-----	0.00
293	0.00	690.55	0.00	-----	-----	-----	-----	-----	-----	-----	-----	0.00
294	0.00	690.55	0.00	-----	-----	-----	-----	-----	-----	-----	-----	0.00

Continues on next page...

Hydrograph Discharge Table

Time (min)	Inflow cfs	Elevation ft	Clv A cfs	Clv B cfs	Clv C cfs	Clv D cfs	Wr A cfs	Wr B cfs	Wr C cfs	Wr D cfs	Exfil cfs	Outflow cfs
295	0.00	690.55	0.00	-----	-----	-----	-----	-----	-----	-----	-----	0.00
296	0.00	690.55	0.00	-----	-----	-----	-----	-----	-----	-----	-----	0.00
297	0.00	690.54	0.00	-----	-----	-----	-----	-----	-----	-----	-----	0.00
298	0.00	690.54	0.00	-----	-----	-----	-----	-----	-----	-----	-----	0.00
299	0.00	690.54	0.00	-----	-----	-----	-----	-----	-----	-----	-----	0.00
300	0.00	690.54	0.00	-----	-----	-----	-----	-----	-----	-----	-----	0.00
301	0.00	690.54	0.00	-----	-----	-----	-----	-----	-----	-----	-----	0.00
302	0.00	690.54	0.00	-----	-----	-----	-----	-----	-----	-----	-----	0.00
303	0.00	690.53	0.00	-----	-----	-----	-----	-----	-----	-----	-----	0.00
304	0.00	690.53	0.00	-----	-----	-----	-----	-----	-----	-----	-----	0.00
305	0.00	690.53	0.00	-----	-----	-----	-----	-----	-----	-----	-----	0.00
306	0.00	690.53	0.00	-----	-----	-----	-----	-----	-----	-----	-----	0.00
307	0.00	690.53	0.00	-----	-----	-----	-----	-----	-----	-----	-----	0.00
308	0.00	690.53	0.00	-----	-----	-----	-----	-----	-----	-----	-----	0.00
309	0.00	690.53	0.00	-----	-----	-----	-----	-----	-----	-----	-----	0.00
310	0.00	690.53	0.00	-----	-----	-----	-----	-----	-----	-----	-----	0.00
311	0.00	690.53	0.00	-----	-----	-----	-----	-----	-----	-----	-----	0.00
312	0.00	690.52	0.00	-----	-----	-----	-----	-----	-----	-----	-----	0.00
313	0.00	690.52	0.00	-----	-----	-----	-----	-----	-----	-----	-----	0.00

...End

Sizing Low Flow Orifice

(1) $Q = C_d \times A \times (2gH)^{0.5}$ Orifice Discharge Equation

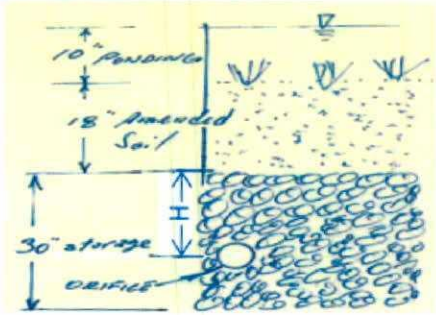

C_d = Orifice Coefficient = 0.60 (sharp, clean edge)
H = Water Head above orifice
g = Gravitational Acceleration = 32.2 ft/s^2
A = Area of the Orifice

(2) $A = [0.1Q_2 \times A_{DMA}]/C_d \times (2gH)^{0.5}$

Q_2 = 2-year Storm Unit Runoff (Per Table 1-6 of 2012 San Diego BMP Sizing Calculator Methodology)
A_{DMA} = Area of the Drainage Management Area (DMA)

DMA	Rain Gauge	Soil Type	Cover	Slope	H (ft)	Q_2 Unit Runoff	A_{DMA} (SF)	A_{DMA} (Acres)	$0.1Q_2$	Max. Orifice Area (inch^2)	Orifice Diameter (inches)	Q_{10} Unit Runoff (cfs/acre)	Q_{10} (cfs)
7	Lake wolford	C	Scrub	Moderate	1.00	0.253	21025	0.48	0.0122	0.37	**0.68**	0.481	0.2322
8	Lake wolford	B	Scrub	Moderate	1.00	0.227	147	0.00	8E-05	0.00	**0.05**	0.448	0.0015
9	Lake wolford	C	Scrub	Moderate	1.00	0.253	869	0.02	0.0005	0.02	**0.14**	0.481	0.0096
10	Lake wolford	B	Scrub	Moderate	1.00	0.227	10406	0.24	0.0054	0.16	**0.45**	0.448	0.1070
11	Lake wolford	C	Scrub	Moderate	1.00	0.253	26933	0.62	0.0156	0.47	**0.77**	0.481	0.2974
12	Lake wolford	B	Scrub	Moderate	1.00	0.227	310	0.01	0.0002	0.00	**0.08**	0.448	0.0032

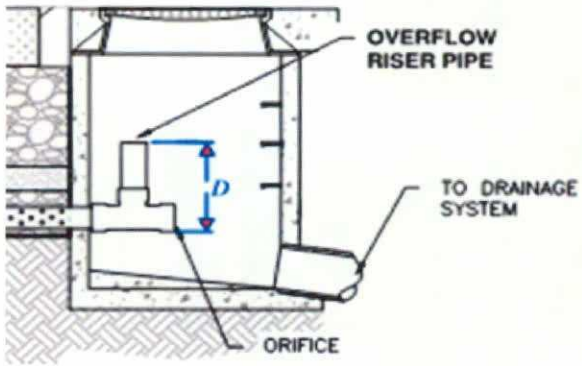

FLOW CONTROL FOR LID NO. 2		
Lower Flow Threshold =	0.0340	cfs
Peak Q_{10} =	0.6509	cfs
Max Orifice Diameter Allowed =	1.138	inch
Proposed Diameter =	1.1	inch
Distance Riser above orifice (D) =	2.3	feet Min.

Prepared by:
Snipes-Dye Associates

12/3/2014

Hydrograph Report

Hydraflow Hydrographs by Intelisolve

Hyd. No. 8

LID 2

Hydrograph type	= Reservoir	Peak discharge	= 0.05 cfs
Storm frequency	= 10 yrs	Time interval	= 1 min
Inflow hyd. No.	= 7	Reservoir name	= LID 2
Max. Elevation	= 692.00 ft	Max. Storage	= 426 cuft

Storage Indication method used.

Outflow hydrograph volume = 466 cuft

Hydrograph Discharge Table

Time (min)	Inflow cfs	Elevation ft	Clv A cfs	Clv B cfs	Clv C cfs	Clv D cfs	Wr A cfs	Wr B cfs	Wr C cfs	Wr D cfs	Exfil cfs	Outflow cfs
2	0.11	689.80	0.00	-----	-----	-----	-----	-----	-----	-----	-----	0.00
3	0.16	689.86	0.01	-----	-----	-----	-----	-----	-----	-----	-----	0.01
4	0.22	689.94	0.01	-----	-----	-----	-----	-----	-----	-----	-----	0.01
5	0.27	690.05	0.02	-----	-----	-----	-----	-----	-----	-----	-----	0.02
6	0.33	690.18	0.02	-----	-----	-----	-----	-----	-----	-----	-----	0.02
7	0.38	690.29	0.02	-----	-----	-----	-----	-----	-----	-----	-----	0.02
8	0.43	690.38	0.02	-----	-----	-----	-----	-----	-----	-----	-----	0.02
9	0.49	690.48	0.03	-----	-----	-----	-----	-----	-----	-----	-----	0.03
10	0.54	690.59	0.03	-----	-----	-----	-----	-----	-----	-----	-----	0.03
11	0.60	690.72	0.03	-----	-----	-----	-----	-----	-----	-----	-----	0.03
12	0.65 <<	690.88	0.03	-----	-----	-----	-----	-----	-----	-----	-----	0.03
13	0.60	691.04	0.04	-----	-----	-----	-----	-----	-----	-----	-----	0.04
14	0.54	691.19	0.04	-----	-----	-----	-----	-----	-----	-----	-----	0.04
15	0.49	691.35	0.04	-----	-----	-----	-----	-----	-----	-----	-----	0.04
16	0.43	691.50	0.04	-----	-----	-----	-----	-----	-----	-----	-----	0.04
17	0.38	691.63	0.04	-----	-----	-----	-----	-----	-----	-----	-----	0.04
18	0.33	691.74	0.04	-----	-----	-----	-----	-----	-----	-----	-----	0.04
19	0.27	691.83	0.05	-----	-----	-----	-----	-----	-----	-----	-----	0.05
20	0.22	691.91	0.05	-----	-----	-----	-----	-----	-----	-----	-----	0.05
21	0.16	691.96	0.05	-----	-----	-----	-----	-----	-----	-----	-----	0.05
22	0.11	691.99	0.05	-----	-----	-----	-----	-----	-----	-----	-----	0.05
23	0.05	692.00 <<	0.05	-----	-----	-----	-----	-----	-----	-----	-----	0.05 <<
24	0.00	691.99	0.05	-----	-----	-----	-----	-----	-----	-----	-----	0.05
25	0.00	691.98	0.05	-----	-----	-----	-----	-----	-----	-----	-----	0.05
26	0.00	691.96	0.05	-----	-----	-----	-----	-----	-----	-----	-----	0.05
27	0.00	691.94	0.05	-----	-----	-----	-----	-----	-----	-----	-----	0.05
28	0.00	691.93	0.05	-----	-----	-----	-----	-----	-----	-----	-----	0.05
29	0.00	691.91	0.05	-----	-----	-----	-----	-----	-----	-----	-----	0.05
30	0.00	691.89	0.05	-----	-----	-----	-----	-----	-----	-----	-----	0.05
31	0.00	691.88	0.05	-----	-----	-----	-----	-----	-----	-----	-----	0.05
32	0.00	691.86	0.05	-----	-----	-----	-----	-----	-----	-----	-----	0.05
33	0.00	691.84	0.05	-----	-----	-----	-----	-----	-----	-----	-----	0.05
34	0.00	691.83	0.05	-----	-----	-----	-----	-----	-----	-----	-----	0.05
35	0.00	691.81	0.05	-----	-----	-----	-----	-----	-----	-----	-----	0.05
36	0.00	691.79	0.04	-----	-----	-----	-----	-----	-----	-----	-----	0.04
37	0.00	691.78	0.04	-----	-----	-----	-----	-----	-----	-----	-----	0.04
38	0.00	691.76	0.04	-----	-----	-----	-----	-----	-----	-----	-----	0.04
39	0.00	691.75	0.04	-----	-----	-----	-----	-----	-----	-----	-----	0.04

10-yr Storm Water Surface in LID No. 2

Continues on next page...

Hydrograph Discharge Table

Time (min)	Inflow cfs	Elevation ft	Clv A cfs	Clv B cfs	Clv C cfs	Clv D cfs	Wr A cfs	Wr B cfs	Wr C cfs	Wr D cfs	Exfil cfs	Outflow cfs
40	0.00	691.73	0.04	-----	-----	-----	-----	-----	-----	-----	-----	0.04
41	0.00	691.71	0.04	-----	-----	-----	-----	-----	-----	-----	-----	0.04
42	0.00	691.70	0.04	-----	-----	-----	-----	-----	-----	-----	-----	0.04
43	0.00	691.68	0.04	-----	-----	-----	-----	-----	-----	-----	-----	0.04
44	0.00	691.67	0.04	-----	-----	-----	-----	-----	-----	-----	-----	0.04
45	0.00	691.65	0.04	-----	-----	-----	-----	-----	-----	-----	-----	0.04
46	0.00	691.64	0.04	-----	-----	-----	-----	-----	-----	-----	-----	0.04
47	0.00	691.62	0.04	-----	-----	-----	-----	-----	-----	-----	-----	0.04
48	0.00	691.60	0.04	-----	-----	-----	-----	-----	-----	-----	-----	0.04
49	0.00	691.59	0.04	-----	-----	-----	-----	-----	-----	-----	-----	0.04
50	0.00	691.57	0.04	-----	-----	-----	-----	-----	-----	-----	-----	0.04
51	0.00	691.56	0.04	-----	-----	-----	-----	-----	-----	-----	-----	0.04
52	0.00	691.54	0.04	-----	-----	-----	-----	-----	-----	-----	-----	0.04
53	0.00	691.53	0.04	-----	-----	-----	-----	-----	-----	-----	-----	0.04
54	0.00	691.51	0.04	-----	-----	-----	-----	-----	-----	-----	-----	0.04
55	0.00	691.50	0.04	-----	-----	-----	-----	-----	-----	-----	-----	0.04
56	0.00	691.48	0.04	-----	-----	-----	-----	-----	-----	-----	-----	0.04
57	0.00	691.47	0.04	-----	-----	-----	-----	-----	-----	-----	-----	0.04
58	0.00	691.45	0.04	-----	-----	-----	-----	-----	-----	-----	-----	0.04
59	0.00	691.44	0.04	-----	-----	-----	-----	-----	-----	-----	-----	0.04
60	0.00	691.42	0.04	-----	-----	-----	-----	-----	-----	-----	-----	0.04
61	0.00	691.41	0.04	-----	-----	-----	-----	-----	-----	-----	-----	0.04
62	0.00	691.39	0.04	-----	-----	-----	-----	-----	-----	-----	-----	0.04
63	0.00	691.38	0.04	-----	-----	-----	-----	-----	-----	-----	-----	0.04
64	0.00	691.37	0.04	-----	-----	-----	-----	-----	-----	-----	-----	0.04
65	0.00	691.35	0.04	-----	-----	-----	-----	-----	-----	-----	-----	0.04
66	0.00	691.34	0.04	-----	-----	-----	-----	-----	-----	-----	-----	0.04
67	0.00	691.32	0.04	-----	-----	-----	-----	-----	-----	-----	-----	0.04
68	0.00	691.31	0.04	-----	-----	-----	-----	-----	-----	-----	-----	0.04
69	0.00	691.29	0.04	-----	-----	-----	-----	-----	-----	-----	-----	0.04
70	0.00	691.28	0.04	-----	-----	-----	-----	-----	-----	-----	-----	0.04
71	0.00	691.27	0.04	-----	-----	-----	-----	-----	-----	-----	-----	0.04
72	0.00	691.25	0.04	-----	-----	-----	-----	-----	-----	-----	-----	0.04
73	0.00	691.24	0.04	-----	-----	-----	-----	-----	-----	-----	-----	0.04
74	0.00	691.23	0.04	-----	-----	-----	-----	-----	-----	-----	-----	0.04
75	0.00	691.22	0.04	-----	-----	-----	-----	-----	-----	-----	-----	0.04
76	0.00	691.21	0.04	-----	-----	-----	-----	-----	-----	-----	-----	0.04
77	0.00	691.20	0.04	-----	-----	-----	-----	-----	-----	-----	-----	0.04
78	0.00	691.19	0.04	-----	-----	-----	-----	-----	-----	-----	-----	0.04
79	0.00	691.18	0.04	-----	-----	-----	-----	-----	-----	-----	-----	0.04
80	0.00	691.17	0.04	-----	-----	-----	-----	-----	-----	-----	-----	0.04
81	0.00	691.16	0.04	-----	-----	-----	-----	-----	-----	-----	-----	0.04
82	0.00	691.15	0.04	-----	-----	-----	-----	-----	-----	-----	-----	0.04
83	0.00	691.14	0.04	-----	-----	-----	-----	-----	-----	-----	-----	0.04
84	0.00	691.13	0.04	-----	-----	-----	-----	-----	-----	-----	-----	0.04
85	0.00	691.12	0.04	-----	-----	-----	-----	-----	-----	-----	-----	0.04
86	0.00	691.11	0.04	-----	-----	-----	-----	-----	-----	-----	-----	0.04
87	0.00	691.09	0.04	-----	-----	-----	-----	-----	-----	-----	-----	0.04
88	0.00	691.08	0.04	-----	-----	-----	-----	-----	-----	-----	-----	0.04
89	0.00	691.07	0.04	-----	-----	-----	-----	-----	-----	-----	-----	0.04
90	0.00	691.06	0.04	-----	-----	-----	-----	-----	-----	-----	-----	0.04

Continues on next page...

Hydrograph Discharge Table

Time (min)	Inflow cfs	Elevation ft	Clv A cfs	Clv B cfs	Clv C cfs	Clv D cfs	Wr A cfs	Wr B cfs	Wr C cfs	Wr D cfs	Exfil cfs	Outflow cfs
91	0.00	691.05	0.04	-----	-----	-----	-----	-----	-----	-----	-----	0.04
92	0.00	691.04	0.04	-----	-----	-----	-----	-----	-----	-----	-----	0.04
93	0.00	691.03	0.04	-----	-----	-----	-----	-----	-----	-----	-----	0.04
94	0.00	691.02	0.04	-----	-----	-----	-----	-----	-----	-----	-----	0.04
95	0.00	691.01	0.04	-----	-----	-----	-----	-----	-----	-----	-----	0.04
96	0.00	691.00	0.03	-----	-----	-----	-----	-----	-----	-----	-----	0.03
97	0.00	690.99	0.03	-----	-----	-----	-----	-----	-----	-----	-----	0.03
98	0.00	690.99	0.03	-----	-----	-----	-----	-----	-----	-----	-----	0.03
99	0.00	690.98	0.03	-----	-----	-----	-----	-----	-----	-----	-----	0.03
100	0.00	690.97	0.03	-----	-----	-----	-----	-----	-----	-----	-----	0.03
101	0.00	690.96	0.03	-----	-----	-----	-----	-----	-----	-----	-----	0.03
102	0.00	690.95	0.03	-----	-----	-----	-----	-----	-----	-----	-----	0.03
103	0.00	690.94	0.03	-----	-----	-----	-----	-----	-----	-----	-----	0.03
104	0.00	690.93	0.03	-----	-----	-----	-----	-----	-----	-----	-----	0.03
105	0.00	690.92	0.03	-----	-----	-----	-----	-----	-----	-----	-----	0.03
106	0.00	690.91	0.03	-----	-----	-----	-----	-----	-----	-----	-----	0.03
107	0.00	690.90	0.03	-----	-----	-----	-----	-----	-----	-----	-----	0.03
108	0.00	690.89	0.03	-----	-----	-----	-----	-----	-----	-----	-----	0.03
109	0.00	690.88	0.03	-----	-----	-----	-----	-----	-----	-----	-----	0.03
110	0.00	690.87	0.03	-----	-----	-----	-----	-----	-----	-----	-----	0.03
111	0.00	690.86	0.03	-----	-----	-----	-----	-----	-----	-----	-----	0.03
112	0.00	690.85	0.03	-----	-----	-----	-----	-----	-----	-----	-----	0.03
113	0.00	690.84	0.03	-----	-----	-----	-----	-----	-----	-----	-----	0.03
114	0.00	690.83	0.03	-----	-----	-----	-----	-----	-----	-----	-----	0.03
115	0.00	690.83	0.03	-----	-----	-----	-----	-----	-----	-----	-----	0.03
116	0.00	690.82	0.03	-----	-----	-----	-----	-----	-----	-----	-----	0.03
117	0.00	690.81	0.03	-----	-----	-----	-----	-----	-----	-----	-----	0.03
118	0.00	690.80	0.03	-----	-----	-----	-----	-----	-----	-----	-----	0.03
119	0.00	690.79	0.03	-----	-----	-----	-----	-----	-----	-----	-----	0.03
120	0.00	690.78	0.03	-----	-----	-----	-----	-----	-----	-----	-----	0.03
121	0.00	690.77	0.03	-----	-----	-----	-----	-----	-----	-----	-----	0.03
122	0.00	690.76	0.03	-----	-----	-----	-----	-----	-----	-----	-----	0.03
123	0.00	690.75	0.03	-----	-----	-----	-----	-----	-----	-----	-----	0.03
124	0.00	690.75	0.03	-----	-----	-----	-----	-----	-----	-----	-----	0.03
125	0.00	690.74	0.03	-----	-----	-----	-----	-----	-----	-----	-----	0.03
126	0.00	690.73	0.03	-----	-----	-----	-----	-----	-----	-----	-----	0.03
127	0.00	690.72	0.03	-----	-----	-----	-----	-----	-----	-----	-----	0.03
128	0.00	690.72	0.03	-----	-----	-----	-----	-----	-----	-----	-----	0.03
129	0.00	690.71	0.03	-----	-----	-----	-----	-----	-----	-----	-----	0.03
130	0.00	690.70	0.03	-----	-----	-----	-----	-----	-----	-----	-----	0.03
131	0.00	690.70	0.03	-----	-----	-----	-----	-----	-----	-----	-----	0.03
132	0.00	690.69	0.03	-----	-----	-----	-----	-----	-----	-----	-----	0.03
133	0.00	690.68	0.03	-----	-----	-----	-----	-----	-----	-----	-----	0.03
134	0.00	690.68	0.03	-----	-----	-----	-----	-----	-----	-----	-----	0.03
135	0.00	690.67	0.03	-----	-----	-----	-----	-----	-----	-----	-----	0.03
136	0.00	690.66	0.03	-----	-----	-----	-----	-----	-----	-----	-----	0.03
137	0.00	690.66	0.03	-----	-----	-----	-----	-----	-----	-----	-----	0.03
138	0.00	690.65	0.03	-----	-----	-----	-----	-----	-----	-----	-----	0.03
139	0.00	690.64	0.03	-----	-----	-----	-----	-----	-----	-----	-----	0.03
140	0.00	690.63	0.03	-----	-----	-----	-----	-----	-----	-----	-----	0.03
141	0.00	690.63	0.03	-----	-----	-----	-----	-----	-----	-----	-----	0.03

Continues on next page...

Hydrograph Discharge Table

Time (min)	Inflow cfs	Elevation ft	Clv A cfs	Clv B cfs	Clv C cfs	Clv D cfs	Wr A cfs	Wr B cfs	Wr C cfs	Wr D cfs	Exfil cfs	Outflow cfs
142	0.00	690.62	0.03	-----	-----	-----	-----	-----	-----	-----	-----	0.03
143	0.00	690.61	0.03	-----	-----	-----	-----	-----	-----	-----	-----	0.03
144	0.00	690.61	0.03	-----	-----	-----	-----	-----	-----	-----	-----	0.03
145	0.00	690.60	0.03	-----	-----	-----	-----	-----	-----	-----	-----	0.03
146	0.00	690.60	0.03	-----	-----	-----	-----	-----	-----	-----	-----	0.03
147	0.00	690.59	0.03	-----	-----	-----	-----	-----	-----	-----	-----	0.03
148	0.00	690.58	0.03	-----	-----	-----	-----	-----	-----	-----	-----	0.03
149	0.00	690.58	0.03	-----	-----	-----	-----	-----	-----	-----	-----	0.03
150	0.00	690.57	0.03	-----	-----	-----	-----	-----	-----	-----	-----	0.03
151	0.00	690.56	0.03	-----	-----	-----	-----	-----	-----	-----	-----	0.03
152	0.00	690.56	0.03	-----	-----	-----	-----	-----	-----	-----	-----	0.03
153	0.00	690.55	0.03	-----	-----	-----	-----	-----	-----	-----	-----	0.03
154	0.00	690.54	0.03	-----	-----	-----	-----	-----	-----	-----	-----	0.03
155	0.00	690.54	0.03	-----	-----	-----	-----	-----	-----	-----	-----	0.03
156	0.00	690.53	0.03	-----	-----	-----	-----	-----	-----	-----	-----	0.03
157	0.00	690.52	0.03	-----	-----	-----	-----	-----	-----	-----	-----	0.03
158	0.00	690.52	0.03	-----	-----	-----	-----	-----	-----	-----	-----	0.03
159	0.00	690.51	0.03	-----	-----	-----	-----	-----	-----	-----	-----	0.03
160	0.00	690.51	0.03	-----	-----	-----	-----	-----	-----	-----	-----	0.03
161	0.00	690.50	0.03	-----	-----	-----	-----	-----	-----	-----	-----	0.03
162	0.00	690.49	0.03	-----	-----	-----	-----	-----	-----	-----	-----	0.03
163	0.00	690.49	0.03	-----	-----	-----	-----	-----	-----	-----	-----	0.03
164	0.00	690.48	0.03	-----	-----	-----	-----	-----	-----	-----	-----	0.03
165	0.00	690.48	0.03	-----	-----	-----	-----	-----	-----	-----	-----	0.03
166	0.00	690.47	0.03	-----	-----	-----	-----	-----	-----	-----	-----	0.03
167	0.00	690.46	0.03	-----	-----	-----	-----	-----	-----	-----	-----	0.03
168	0.00	690.46	0.03	-----	-----	-----	-----	-----	-----	-----	-----	0.03
169	0.00	690.45	0.03	-----	-----	-----	-----	-----	-----	-----	-----	0.03
170	0.00	690.45	0.03	-----	-----	-----	-----	-----	-----	-----	-----	0.03
171	0.00	690.44	0.03	-----	-----	-----	-----	-----	-----	-----	-----	0.03
172	0.00	690.43	0.03	-----	-----	-----	-----	-----	-----	-----	-----	0.03
173	0.00	690.43	0.03	-----	-----	-----	-----	-----	-----	-----	-----	0.03
174	0.00	690.42	0.03	-----	-----	-----	-----	-----	-----	-----	-----	0.03
175	0.00	690.42	0.03	-----	-----	-----	-----	-----	-----	-----	-----	0.03
176	0.00	690.41	0.02	-----	-----	-----	-----	-----	-----	-----	-----	0.02
177	0.00	690.40	0.02	-----	-----	-----	-----	-----	-----	-----	-----	0.02
178	0.00	690.40	0.02	-----	-----	-----	-----	-----	-----	-----	-----	0.02
179	0.00	690.39	0.02	-----	-----	-----	-----	-----	-----	-----	-----	0.02
180	0.00	690.39	0.02	-----	-----	-----	-----	-----	-----	-----	-----	0.02
181	0.00	690.38	0.02	-----	-----	-----	-----	-----	-----	-----	-----	0.02
182	0.00	690.38	0.02	-----	-----	-----	-----	-----	-----	-----	-----	0.02
183	0.00	690.37	0.02	-----	-----	-----	-----	-----	-----	-----	-----	0.02
184	0.00	690.37	0.02	-----	-----	-----	-----	-----	-----	-----	-----	0.02
185	0.00	690.36	0.02	-----	-----	-----	-----	-----	-----	-----	-----	0.02
186	0.00	690.35	0.02	-----	-----	-----	-----	-----	-----	-----	-----	0.02
187	0.00	690.35	0.02	-----	-----	-----	-----	-----	-----	-----	-----	0.02
188	0.00	690.34	0.02	-----	-----	-----	-----	-----	-----	-----	-----	0.02
189	0.00	690.34	0.02	-----	-----	-----	-----	-----	-----	-----	-----	0.02
190	0.00	690.33	0.02	-----	-----	-----	-----	-----	-----	-----	-----	0.02
191	0.00	690.33	0.02	-----	-----	-----	-----	-----	-----	-----	-----	0.02
192	0.00	690.32	0.02	-----	-----	-----	-----	-----	-----	-----	-----	0.02

Continues on next page...

Hydrograph Discharge Table

Time (min)	Inflow cfs	Elevation ft	Clv A cfs	Clv B cfs	Clv C cfs	Clv D cfs	Wr A cfs	Wr B cfs	Wr C cfs	Wr D cfs	Exfil cfs	Outflow cfs
193	0.00	690.32	0.02	-----	-----	-----	-----	-----	-----	-----	-----	0.02
194	0.00	690.31	0.02	-----	-----	-----	-----	-----	-----	-----	-----	0.02
195	0.00	690.31	0.02	-----	-----	-----	-----	-----	-----	-----	-----	0.02
196	0.00	690.30	0.02	-----	-----	-----	-----	-----	-----	-----	-----	0.02
197	0.00	690.30	0.02	-----	-----	-----	-----	-----	-----	-----	-----	0.02
198	0.00	690.29	0.02	-----	-----	-----	-----	-----	-----	-----	-----	0.02
199	0.00	690.29	0.02	-----	-----	-----	-----	-----	-----	-----	-----	0.02
200	0.00	690.28	0.02	-----	-----	-----	-----	-----	-----	-----	-----	0.02
201	0.00	690.28	0.02	-----	-----	-----	-----	-----	-----	-----	-----	0.02
202	0.00	690.27	0.02	-----	-----	-----	-----	-----	-----	-----	-----	0.02
203	0.00	690.27	0.02	-----	-----	-----	-----	-----	-----	-----	-----	0.02
204	0.00	690.26	0.02	-----	-----	-----	-----	-----	-----	-----	-----	0.02
205	0.00	690.26	0.02	-----	-----	-----	-----	-----	-----	-----	-----	0.02
206	0.00	690.25	0.02	-----	-----	-----	-----	-----	-----	-----	-----	0.02
207	0.00	690.24	0.02	-----	-----	-----	-----	-----	-----	-----	-----	0.02
208	0.00	690.23	0.02	-----	-----	-----	-----	-----	-----	-----	-----	0.02
209	0.00	690.22	0.02	-----	-----	-----	-----	-----	-----	-----	-----	0.02
210	0.00	690.21	0.02	-----	-----	-----	-----	-----	-----	-----	-----	0.02
211	0.00	690.20	0.02	-----	-----	-----	-----	-----	-----	-----	-----	0.02
212	0.00	690.19	0.02	-----	-----	-----	-----	-----	-----	-----	-----	0.02
213	0.00	690.18	0.02	-----	-----	-----	-----	-----	-----	-----	-----	0.02
214	0.00	690.17	0.02	-----	-----	-----	-----	-----	-----	-----	-----	0.02
215	0.00	690.17	0.02	-----	-----	-----	-----	-----	-----	-----	-----	0.02
216	0.00	690.16	0.02	-----	-----	-----	-----	-----	-----	-----	-----	0.02
217	0.00	690.15	0.02	-----	-----	-----	-----	-----	-----	-----	-----	0.02
218	0.00	690.14	0.02	-----	-----	-----	-----	-----	-----	-----	-----	0.02
219	0.00	690.13	0.02	-----	-----	-----	-----	-----	-----	-----	-----	0.02
220	0.00	690.12	0.02	-----	-----	-----	-----	-----	-----	-----	-----	0.02
221	0.00	690.11	0.02	-----	-----	-----	-----	-----	-----	-----	-----	0.02
222	0.00	690.11	0.02	-----	-----	-----	-----	-----	-----	-----	-----	0.02
223	0.00	690.10	0.02	-----	-----	-----	-----	-----	-----	-----	-----	0.02
224	0.00	690.09	0.02	-----	-----	-----	-----	-----	-----	-----	-----	0.02
225	0.00	690.08	0.02	-----	-----	-----	-----	-----	-----	-----	-----	0.02
226	0.00	690.07	0.02	-----	-----	-----	-----	-----	-----	-----	-----	0.02
227	0.00	690.07	0.02	-----	-----	-----	-----	-----	-----	-----	-----	0.02
228	0.00	690.06	0.02	-----	-----	-----	-----	-----	-----	-----	-----	0.02
229	0.00	690.05	0.02	-----	-----	-----	-----	-----	-----	-----	-----	0.02
230	0.00	690.04	0.02	-----	-----	-----	-----	-----	-----	-----	-----	0.02
231	0.00	690.04	0.02	-----	-----	-----	-----	-----	-----	-----	-----	0.02
232	0.00	690.03	0.02	-----	-----	-----	-----	-----	-----	-----	-----	0.02
233	0.00	690.02	0.02	-----	-----	-----	-----	-----	-----	-----	-----	0.02
234	0.00	690.02	0.01	-----	-----	-----	-----	-----	-----	-----	-----	0.01
235	0.00	690.01	0.01	-----	-----	-----	-----	-----	-----	-----	-----	0.01
236	0.00	690.00	0.01	-----	-----	-----	-----	-----	-----	-----	-----	0.01
237	0.00	690.00	0.01	-----	-----	-----	-----	-----	-----	-----	-----	0.01
238	0.00	689.99	0.01	-----	-----	-----	-----	-----	-----	-----	-----	0.01
239	0.00	689.98	0.01	-----	-----	-----	-----	-----	-----	-----	-----	0.01
240	0.00	689.98	0.01	-----	-----	-----	-----	-----	-----	-----	-----	0.01
241	0.00	689.97	0.01	-----	-----	-----	-----	-----	-----	-----	-----	0.01
242	0.00	689.96	0.01	-----	-----	-----	-----	-----	-----	-----	-----	0.01
243	0.00	689.96	0.01	-----	-----	-----	-----	-----	-----	-----	-----	0.01

Continues on next page...

Hydrograph Discharge Table

Time (min)	Inflow cfs	Elevation ft	Clv A cfs	Clv B cfs	Clv C cfs	Clv D cfs	Wr A cfs	Wr B cfs	Wr C cfs	Wr D cfs	Exfil cfs	Outflow cfs
244	0.00	689.95	0.01	-----	-----	-----	-----	-----	-----	-----	-----	0.01
245	0.00	689.95	0.01	-----	-----	-----	-----	-----	-----	-----	-----	0.01
246	0.00	689.94	0.01	-----	-----	-----	-----	-----	-----	-----	-----	0.01
247	0.00	689.94	0.01	-----	-----	-----	-----	-----	-----	-----	-----	0.01
248	0.00	689.93	0.01	-----	-----	-----	-----	-----	-----	-----	-----	0.01
249	0.00	689.92	0.01	-----	-----	-----	-----	-----	-----	-----	-----	0.01
250	0.00	689.92	0.01	-----	-----	-----	-----	-----	-----	-----	-----	0.01
251	0.00	689.91	0.01	-----	-----	-----	-----	-----	-----	-----	-----	0.01
252	0.00	689.91	0.01	-----	-----	-----	-----	-----	-----	-----	-----	0.01
253	0.00	689.90	0.01	-----	-----	-----	-----	-----	-----	-----	-----	0.01
254	0.00	689.90	0.01	-----	-----	-----	-----	-----	-----	-----	-----	0.01
255	0.00	689.90	0.01	-----	-----	-----	-----	-----	-----	-----	-----	0.01
256	0.00	689.89	0.01	-----	-----	-----	-----	-----	-----	-----	-----	0.01
257	0.00	689.89	0.01	-----	-----	-----	-----	-----	-----	-----	-----	0.01
258	0.00	689.88	0.01	-----	-----	-----	-----	-----	-----	-----	-----	0.01
259	0.00	689.88	0.01	-----	-----	-----	-----	-----	-----	-----	-----	0.01
260	0.00	689.87	0.01	-----	-----	-----	-----	-----	-----	-----	-----	0.01
261	0.00	689.87	0.01	-----	-----	-----	-----	-----	-----	-----	-----	0.01
262	0.00	689.87	0.01	-----	-----	-----	-----	-----	-----	-----	-----	0.01
263	0.00	689.86	0.01	-----	-----	-----	-----	-----	-----	-----	-----	0.01
264	0.00	689.86	0.01	-----	-----	-----	-----	-----	-----	-----	-----	0.01
265	0.00	689.85	0.01	-----	-----	-----	-----	-----	-----	-----	-----	0.01
266	0.00	689.85	0.01	-----	-----	-----	-----	-----	-----	-----	-----	0.01
267	0.00	689.85	0.01	-----	-----	-----	-----	-----	-----	-----	-----	0.01
268	0.00	689.84	0.01	-----	-----	-----	-----	-----	-----	-----	-----	0.01
269	0.00	689.84	0.01	-----	-----	-----	-----	-----	-----	-----	-----	0.01
270	0.00	689.84	0.01	-----	-----	-----	-----	-----	-----	-----	-----	0.01
271	0.00	689.84	0.01	-----	-----	-----	-----	-----	-----	-----	-----	0.01
272	0.00	689.83	0.01	-----	-----	-----	-----	-----	-----	-----	-----	0.01
273	0.00	689.83	0.01	-----	-----	-----	-----	-----	-----	-----	-----	0.01
274	0.00	689.83	0.01	-----	-----	-----	-----	-----	-----	-----	-----	0.01
275	0.00	689.83	0.01	-----	-----	-----	-----	-----	-----	-----	-----	0.01
276	0.00	689.82	0.00	-----	-----	-----	-----	-----	-----	-----	-----	0.00
277	0.00	689.82	0.00	-----	-----	-----	-----	-----	-----	-----	-----	0.00
278	0.00	689.82	0.00	-----	-----	-----	-----	-----	-----	-----	-----	0.00
279	0.00	689.82	0.00	-----	-----	-----	-----	-----	-----	-----	-----	0.00
280	0.00	689.81	0.00	-----	-----	-----	-----	-----	-----	-----	-----	0.00
281	0.00	689.81	0.00	-----	-----	-----	-----	-----	-----	-----	-----	0.00
282	0.00	689.81	0.00	-----	-----	-----	-----	-----	-----	-----	-----	0.00
283	0.00	689.81	0.00	-----	-----	-----	-----	-----	-----	-----	-----	0.00
284	0.00	689.81	0.00	-----	-----	-----	-----	-----	-----	-----	-----	0.00
285	0.00	689.81	0.00	-----	-----	-----	-----	-----	-----	-----	-----	0.00
286	0.00	689.80	0.00	-----	-----	-----	-----	-----	-----	-----	-----	0.00
287	0.00	689.80	0.00	-----	-----	-----	-----	-----	-----	-----	-----	0.00
288	0.00	689.80	0.00	-----	-----	-----	-----	-----	-----	-----	-----	0.00
289	0.00	689.80	0.00	-----	-----	-----	-----	-----	-----	-----	-----	0.00
290	0.00	689.80	0.00	-----	-----	-----	-----	-----	-----	-----	-----	0.00
291	0.00	689.80	0.00	-----	-----	-----	-----	-----	-----	-----	-----	0.00
292	0.00	689.80	0.00	-----	-----	-----	-----	-----	-----	-----	-----	0.00
293	0.00	689.80	0.00	-----	-----	-----	-----	-----	-----	-----	-----	0.00
294	0.00	689.79	0.00	-----	-----	-----	-----	-----	-----	-----	-----	0.00

Continues on next page...

Hydrograph Discharge Table

Time (min)	Inflow cfs	Elevation ft	Clv A cfs	Clv B cfs	Clv C cfs	Clv D cfs	Wr A cfs	Wr B cfs	Wr C cfs	Wr D cfs	Exfil cfs	Outflow cfs
295	0.00	689.79	0.00	-----	-----	-----	-----	-----	-----	-----	-----	0.00
296	0.00	689.79	0.00	-----	-----	-----	-----	-----	-----	-----	-----	0.00
297	0.00	689.79	0.00	-----	-----	-----	-----	-----	-----	-----	-----	0.00
298	0.00	689.79	0.00	-----	-----	-----	-----	-----	-----	-----	-----	0.00
299	0.00	689.79	0.00	-----	-----	-----	-----	-----	-----	-----	-----	0.00
300	0.00	689.79	0.00	-----	-----	-----	-----	-----	-----	-----	-----	0.00
301	0.00	689.79	0.00	-----	-----	-----	-----	-----	-----	-----	-----	0.00
302	0.00	689.79	0.00	-----	-----	-----	-----	-----	-----	-----	-----	0.00
303	0.00	689.79	0.00	-----	-----	-----	-----	-----	-----	-----	-----	0.00
304	0.00	689.78	0.00	-----	-----	-----	-----	-----	-----	-----	-----	0.00
305	0.00	689.78	0.00	-----	-----	-----	-----	-----	-----	-----	-----	0.00
306	0.00	689.78	0.00	-----	-----	-----	-----	-----	-----	-----	-----	0.00
307	0.00	689.78	0.00	-----	-----	-----	-----	-----	-----	-----	-----	0.00
308	0.00	689.78	0.00	-----	-----	-----	-----	-----	-----	-----	-----	0.00
309	0.00	689.78	0.00	-----	-----	-----	-----	-----	-----	-----	-----	0.00
310	0.00	689.78	0.00	-----	-----	-----	-----	-----	-----	-----	-----	0.00
311	0.00	689.78	0.00	-----	-----	-----	-----	-----	-----	-----	-----	0.00
312	0.00	689.78	0.00	-----	-----	-----	-----	-----	-----	-----	-----	0.00
313	0.00	689.78	0.00	-----	-----	-----	-----	-----	-----	-----	-----	0.00
314	0.00	689.78	0.00	-----	-----	-----	-----	-----	-----	-----	-----	0.00
315	0.00	689.78	0.00	-----	-----	-----	-----	-----	-----	-----	-----	0.00
316	0.00	689.78	0.00	-----	-----	-----	-----	-----	-----	-----	-----	0.00
317	0.00	689.77	0.00	-----	-----	-----	-----	-----	-----	-----	-----	0.00
318	0.00	689.77	0.00	-----	-----	-----	-----	-----	-----	-----	-----	0.00
319	0.00	689.77	0.00	-----	-----	-----	-----	-----	-----	-----	-----	0.00
320	0.00	689.77	0.00	-----	-----	-----	-----	-----	-----	-----	-----	0.00
321	0.00	689.77	0.00	-----	-----	-----	-----	-----	-----	-----	-----	0.00
322	0.00	689.77	0.00	-----	-----	-----	-----	-----	-----	-----	-----	0.00
323	0.00	689.77	0.00	-----	-----	-----	-----	-----	-----	-----	-----	0.00
324	0.00	689.77	0.00	-----	-----	-----	-----	-----	-----	-----	-----	0.00
325	0.00	689.77	0.00	-----	-----	-----	-----	-----	-----	-----	-----	0.00
326	0.00	689.77	0.00	-----	-----	-----	-----	-----	-----	-----	-----	0.00
327	0.00	689.77	0.00	-----	-----	-----	-----	-----	-----	-----	-----	0.00
328	0.00	689.77	0.00	-----	-----	-----	-----	-----	-----	-----	-----	0.00
329	0.00	689.77	0.00	-----	-----	-----	-----	-----	-----	-----	-----	0.00

...End

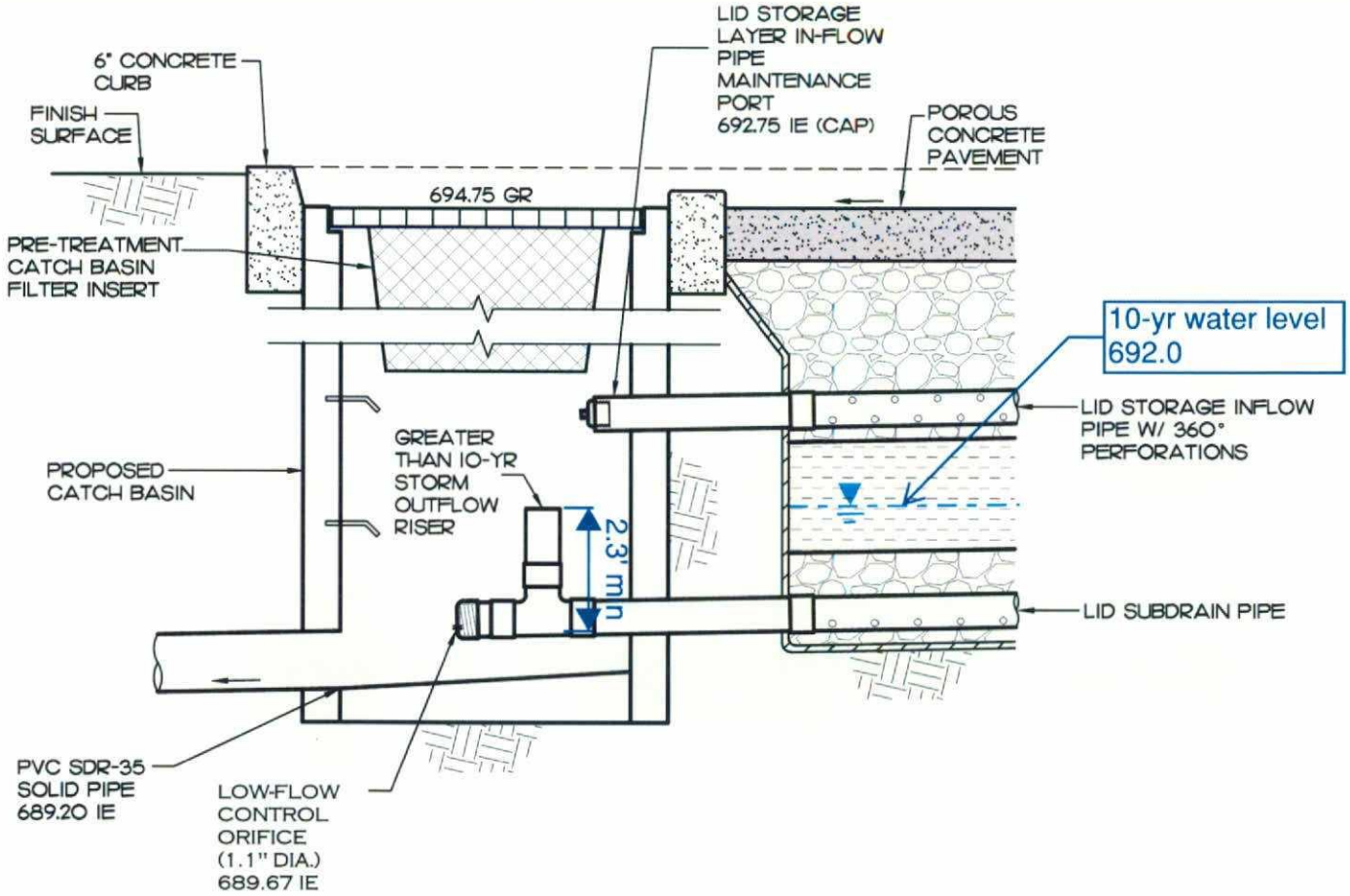

LID NO. 2 OUTLET STRUCTURE

NO SCALE