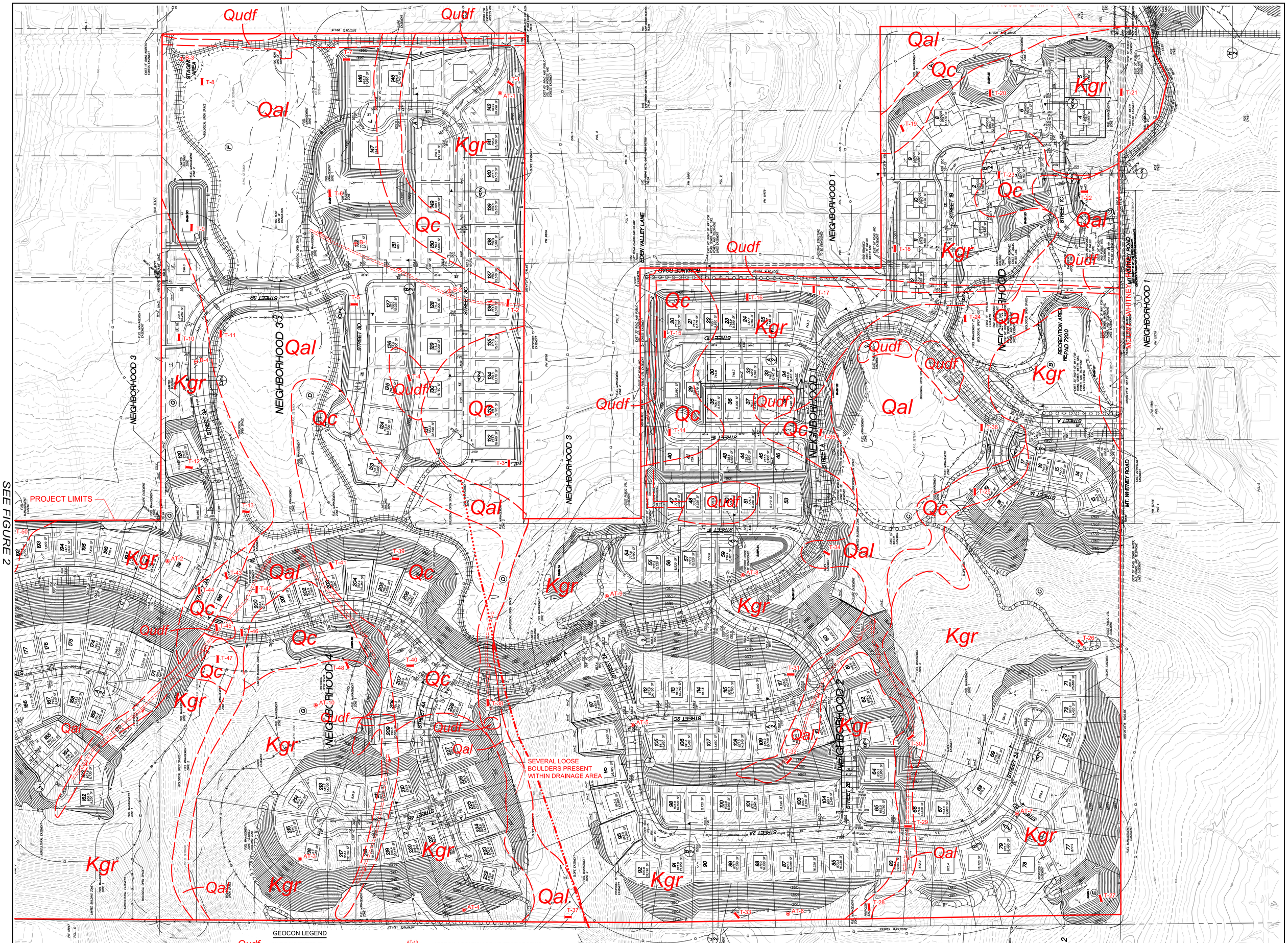

GEOCON LEGEND

- Qudf .....UNDOCUMENTED FILL
- Qal .....ALLUVIUM
- Qc .....COLLUVIUM
- Qt .....TERRACE DEPOSITS
- Ts .....SANTIAGO FORMATION (Dotted Where Buried)
- Kgr .....GRANITIC ROCK
- .....APPROX. LOCATION OF GEOLOGIC CONTACT
- T-56 .....APPROX. LOCATION OF TRENCH
- AT-10 .....APPROX. LOCATION OF AIR TRACK BORING
- B-5 .....APPROX. LOCATION OF HOLLOW STEM BORING
- .....APPROX. LOCATION OF PROPOSED CANYON SUBDRAIN
- SL-6 .....APPROX. LOCATION OF SEISMIC TRAVERSE
- .....FAULT (Dotted Where Buried)

0' 50' 100' 150' 200' 300' 400'

SCALE 1"= 100'

GEOLOGIC MAP

VALIANO (EDEN HILLS)
SAN DIEGO COUNTY, CALIFORNIA

GEOCON INCORPORATED
GEOTECHNICAL ■ ENVIRONMENTAL ■ MATERIALS
6960 FLANDERS DRIVE - SAN DIEGO, CALIFORNIA 92121 - 2974
PHONE 858 558-6900 - FAX 858 558-6159

SCALE	1" = 100'
DATE	05 - 13 - 2014
PROJECT NO.	G1416 - 52 - 03
FIGURE	3
SHEET	2 OF 2

Y:\PROJECTS\G1416-52-03 Eden Hills & 48 Acre Fires\SHEETS\G1416-52-03 GEO-MAP_Eden Hills Site.dwg

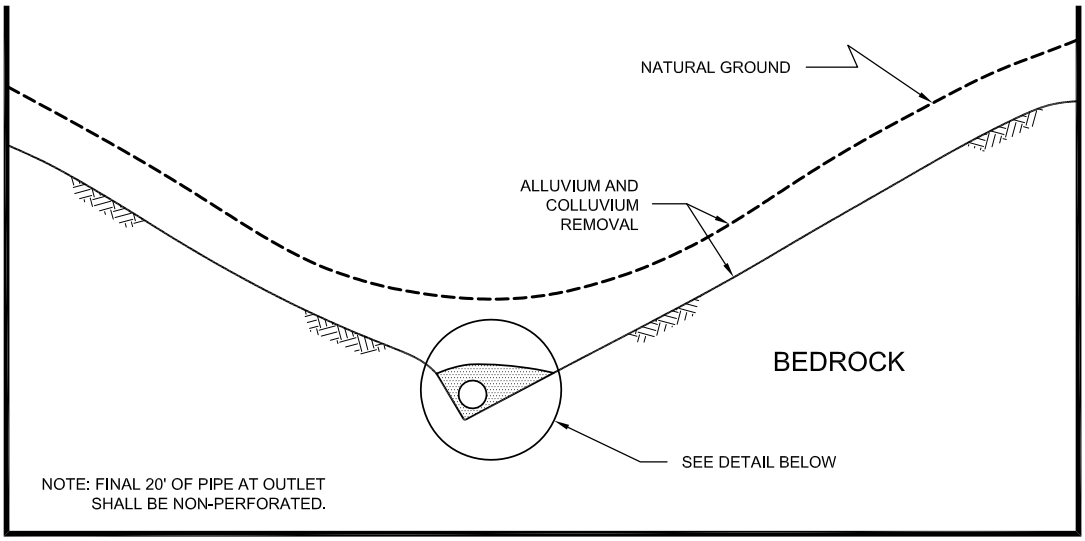

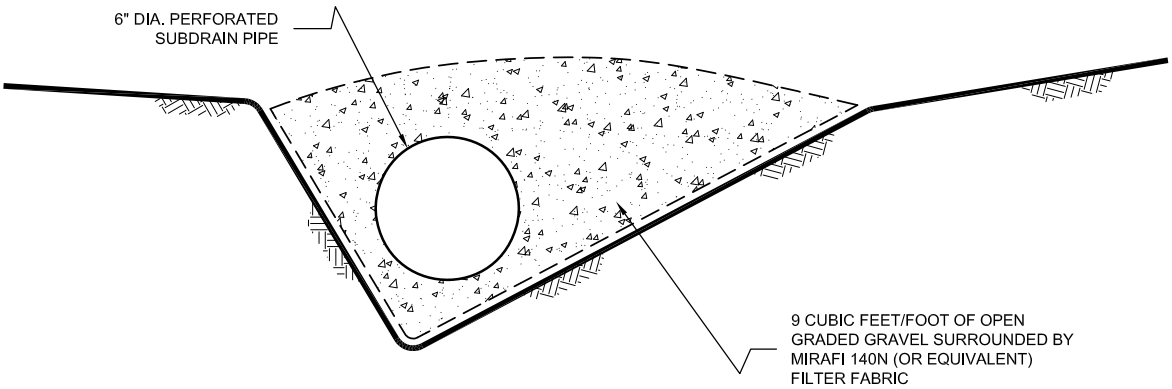

NOTE:

1.....6-INCH DIAMETER, SCHEDULE 80 PVC PERFORATED PIPE FOR FILLS IN EXCESS OF 100-FEET IN DEPTH

2.....8-INCH DIAMETER, SCHEDULE 40 PVC PERFORATED PIPE FOR FILLS LESS THAN 100-FEET IN DEPTH

NO SCALE

TYPICAL CANYON SUBDRAIN DETAIL

GEOCON
INCORPORATED
GEOTECHNICAL ■ ENVIRONMENTAL ■ MATERIALS
6960 FLANDERS DRIVE - SAN DIEGO, CALIFORNIA 92121 - 2974
PHONE 858 558-6900 - FAX 858 558-6159

VALIANO (EDEN HILLS)
SAN DIEGO COUNTY, CALIFORNIA

AS / RA		DSK/GTYPD	DATE 05 - 13 - 2014	PROJECT NO. G1416 - 52 - 03	FIG. 4

Y:/PROJECTS/G1416-52-03 Eden Hills & 48 Acre Fines/DETAILS/DETAILS-For Eden Hills Site/CYNDTAIL1.dwg

FRONT VIEW

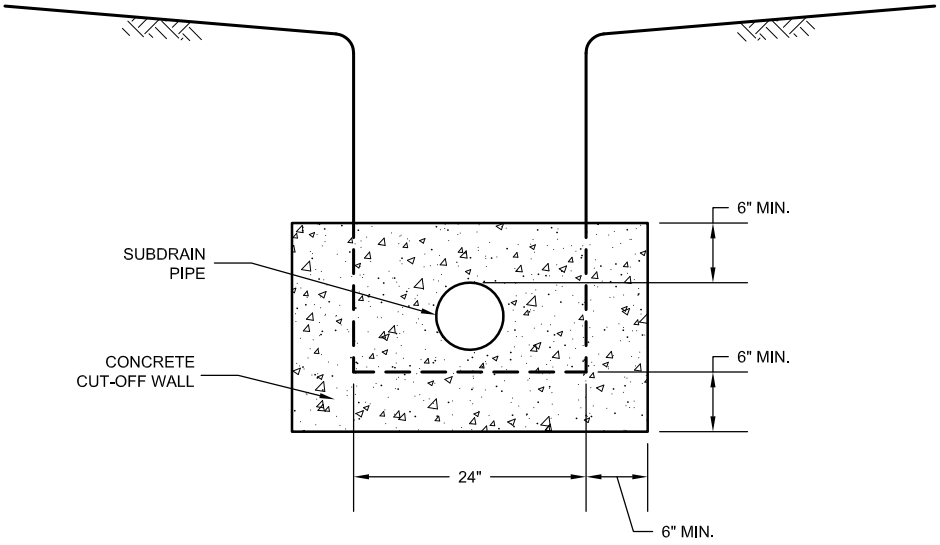

NO SCALE

SIDE VIEW

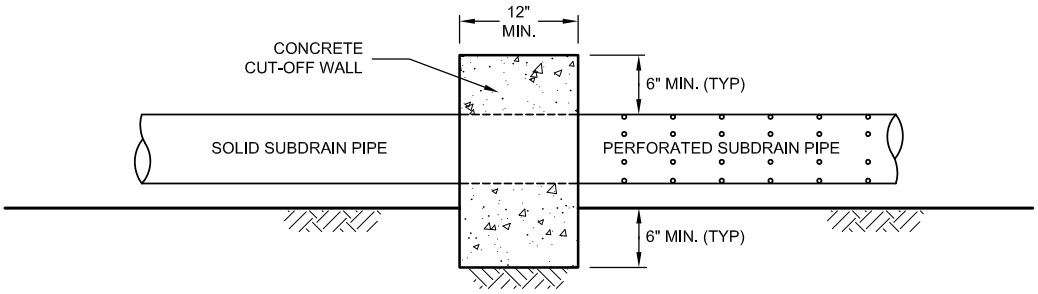

NO SCALE

TYPICAL SUBDRAIN CUT-OFF WALL DETAIL

GEOCON INCORPORATED
GEOTECHNICAL ■ ENVIRONMENTAL ■ MATERIALS
6960 FLANDERS DRIVE - SAN DIEGO, CALIFORNIA 92121 - 2974
PHONE 858 558-6900 - FAX 858 558-6159

VALIANO (EDEN HILLS)
SAN DIEGO COUNTY, CALIFORNIA

AS / RA		DSK/GTYPD	DATE 05 - 13 - 2014	PROJECT NO. G1416 - 52 - 03	FIG. 5

FRONT VIEW

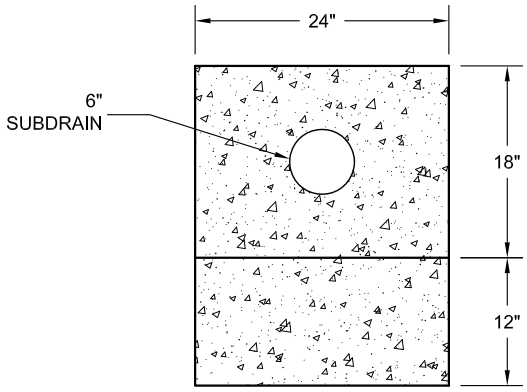

NO SCALE

SIDE VIEW

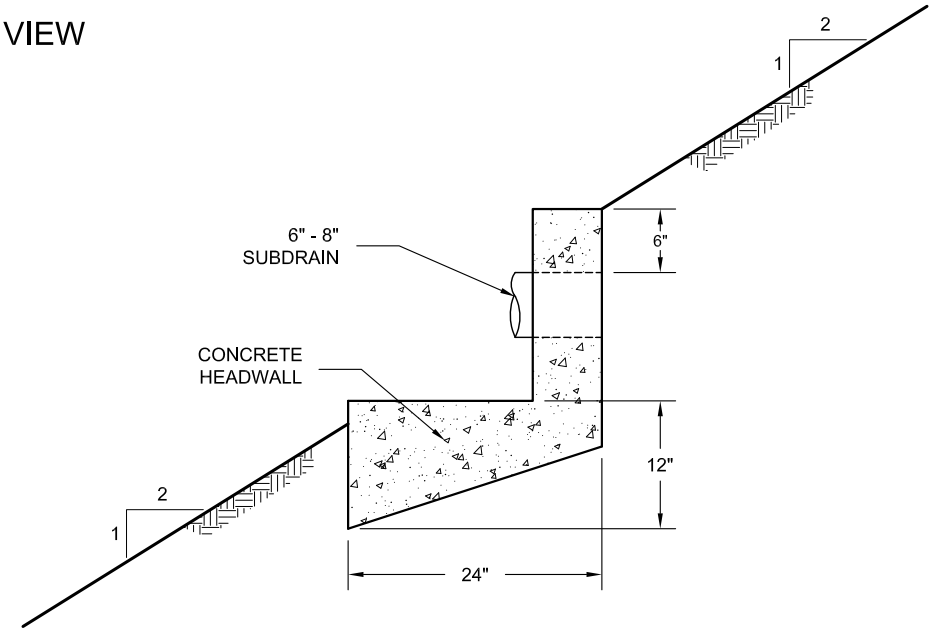

NOTE: HEADWALL SHOULD OUTLET INTO CONTROLLED SURFACE DRAINAGE

NO SCALE

TYPICAL SUBDRAIN OUTLET HEADWALL DETAIL

GEOCON
INCORPORATED

GEOTECHNICAL ■ ENVIRONMENTAL ■ MATERIALS
6960 FLANDERS DRIVE - SAN DIEGO, CALIFORNIA 92121 - 2974
PHONE 858 558-6900 - FAX 858 558-6159

VALIANO (EDEN HILLS)
SAN DIEGO COUNTY, CALIFORNIA

AS / RA		DSK/GTYPD	DATE 05 - 13 - 2014	PROJECT NO. G1416 - 52 - 03	FIG. 6

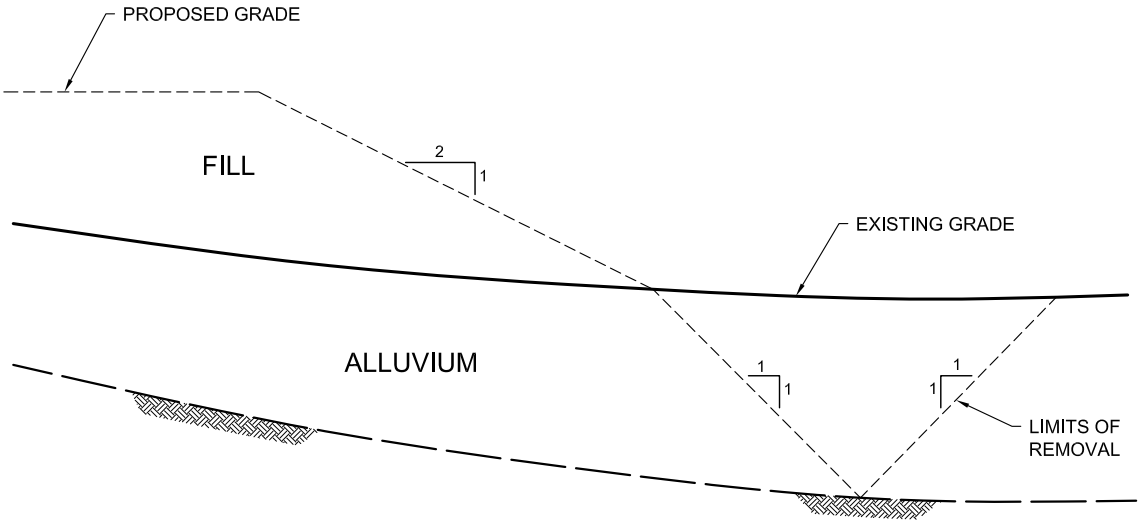

LEFT-IN-PLACE
FORMATIONAL MATERIAL

NOT TO SCALE

NOTE:

SLOPE OF BACKCUT MAY BE STEEPENED WITH THE APPROVAL OF THE SOILS ENGINEER WHERE BOUNDARY CONSTRAINTS LIMIT EXTENT OF REMOVALS

CONSTRUCTION DETAIL FOR LATERAL EXTENT OF REMOVAL

GEOCON
INCORPORATED
GEOTECHNICAL ■ ENVIRONMENTAL ■ MATERIALS
6960 FLANDERS DRIVE - SAN DIEGO, CALIFORNIA 92121 - 2974
PHONE 858 558-6900 - FAX 858 558-6159

VALIANO (EDEN HILLS)
SAN DIEGO COUNTY, CALIFORNIA

AS / RA		DSK/GTYPD	DATE 05 - 13 - 2014	PROJECT NO. G1416 - 52 - 03	FIG. 7

ASSUMED CONDITIONS :

SLOPE HEIGHT	H	= 35 feet
SLOPE INCLINATION	2 : 1	(Horizontal : Vertical)
TOTAL UNIT WEIGHT OF SOIL	γ_t	= 130 pounds per cubic foot
ANGLE OF INTERNAL FRICTION	ϕ	= 32 degrees
APPARENT COHESION	C	= 300 pounds per square foot
NO SEEPAGE FORCES		

ANALYSIS :

$\gamma_{c\phi}$	=	$\frac{\gamma_t H \tan\phi}{C}$	EQUATION (3-3), REFERENCE 1
FS	=	$\frac{NcfC}{\gamma_t H}$	EQUATION (3-2), REFERENCE 1
$\gamma_{c\phi}$	=	13.5	CALCULATED USING EQ. (3-3)
Ncf	=	37	DETERMINED USING FIGURE 10, REFERENCE 2
FS	=	1.7	FACTOR OF SAFETY CALCULATED USING EQ. (3-2)

REFERENCES :

1.....Janbu, N., Stability Analysis of Slopes with Dimensionless Parameters, Harvard Soil Mechanics, Series No. 46, 1954

2.....Janbu, N., Discussion of J.M. Bell, Dimensionless Parameters for Homogeneous Earth Slopes, Journal of Soil Mechanics and Foundation Design, No. SM6, November 1967.

FILL SLOPE STABILITY ANALYSIS

GEOCON INCORPORATED

GEOTECHNICAL ■ ENVIRONMENTAL ■ MATERIALS
6960 FLANDERS DRIVE - SAN DIEGO, CALIFORNIA 92121 - 2974
PHONE 858 558-6900 - FAX 858 558-6159

VALIANO (EDEN HILLS)
SAN DIEGO COUNTY, CALIFORNIA

AS / RA		DSK/E0000	DATE 05 - 13 - 2014	PROJECT NO. G1416 - 52 - 03	FIG. 8

ASSUMED CONDITIONS :

SLOPE HEIGHT	H	=	Infinite
DEPTH OF SATURATION	Z	=	3 feet
SLOPE INCLINATION	2 : 1 (Horizontal : Vertical)		
SLOPE ANGLE	i	=	26.6 degrees
UNIT WEIGHT OF WATER	γ_w	=	62.4 pounds per cubic foot
TOTAL UNIT WEIGHT OF SOIL	γ_t	=	130 pounds per cubic foot
ANGLE OF INTERNAL FRICTION	ϕ	=	32 degrees
APPARENT COHESION	C	=	300 pounds per square foot

SLOPE SATURATED TO VERTICAL DEPTH Z BELOW SLOPE FACE

SEEPAGE FORCES PARALLEL TO SLOPE FACE

ANALYSIS :

$$FS = \frac{C + (\gamma_t - \gamma_w)\ Z\ \cos^2 i\ \tan \phi}{\gamma_t\ Z\ \sin i\ \cos i} = 2.6$$

REFERENCES :

1.....Haefeli, R. *The Stability of Slopes Acted Upon by Parallel Seepage*, Proc. Second International Conference, SMFE, Rotterdam, 1948, 1, 57-62

2.....Skempton, A. W., and F.A. Delory, *Stability of Natural Slopes in London Clay*, Proc. Fourth International Conference, SMFE, London, 1957, 2, 378-81

SURFICIAL FILL SLOPE STABILITY ANALYSIS

GEOCON INCORPORATED

GEOTECHNICAL ■ ENVIRONMENTAL ■ MATERIALS

6960 FLANDERS DRIVE - SAN DIEGO, CALIFORNIA 92121 - 2974

PHONE 858 558-6900 - FAX 858 558-6159

VALIANO (EDEN HILLS)

SAN DIEGO COUNTY, CALIFORNIA

AS / RA		DSK/E0000	DATE 05 - 13 - 2014	PROJECT NO. G1416 - 52 - 03	FIG. 9

WALL FOOTING

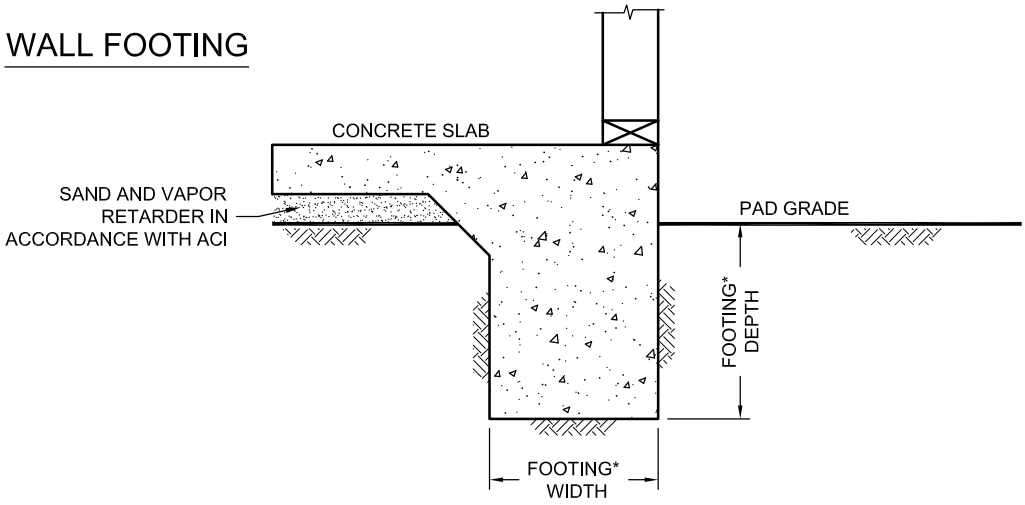

COLUMN FOOTING

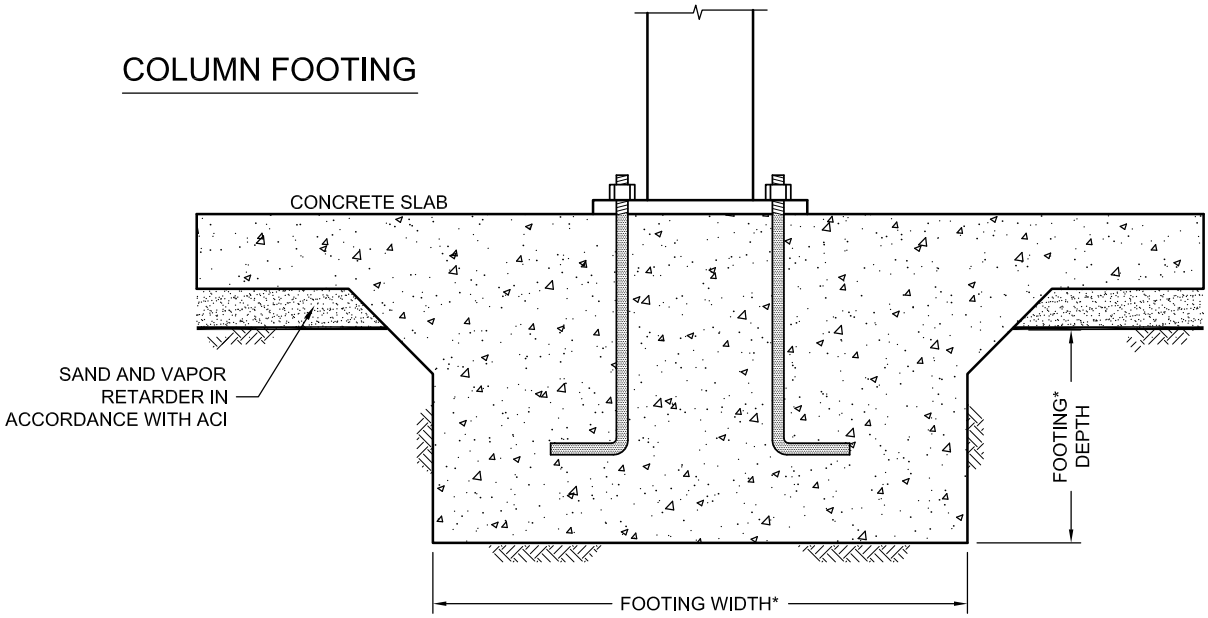

NO SCALE

*....SEE REPORT FOR FOUNDATION WITDH AND DEPTH RECOMMENDATION

WALL / COLUMN FOOTING DIMENSION DETAIL

GEOCON INCORPORATED
GEOTECHNICAL ■ ENVIRONMENTAL ■ MATERIALS
6960 FLANDERS DRIVE - SAN DIEGO, CALIFORNIA 92121 - 2974
PHONE 858 558-6900 - FAX 858 558-6159

VALIANO (EDEN HILLS)
SAN DIEGO COUNTY, CALIFORNIA

AS / RA		DSK/GTYPD	DATE 05 - 13 - 2014	PROJECT NO. G1416 - 52 - 03	FIG. 10

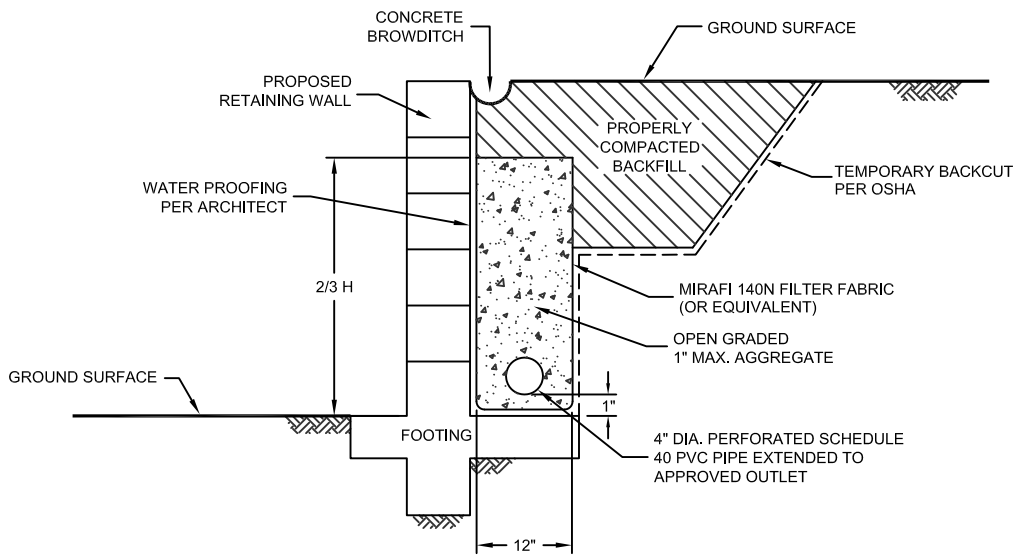

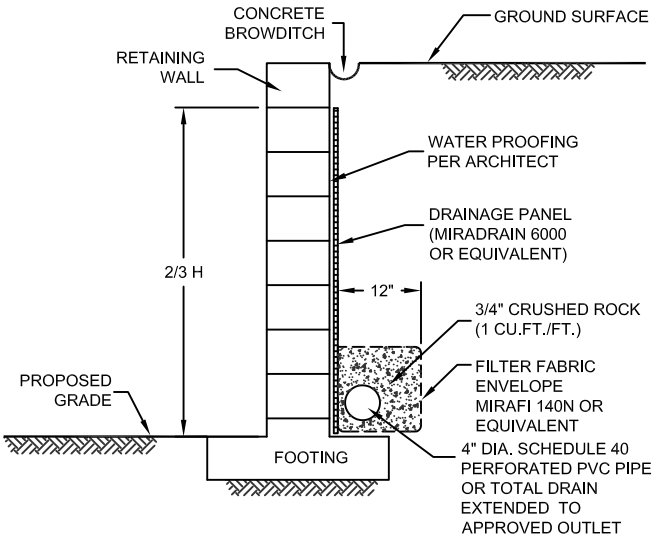

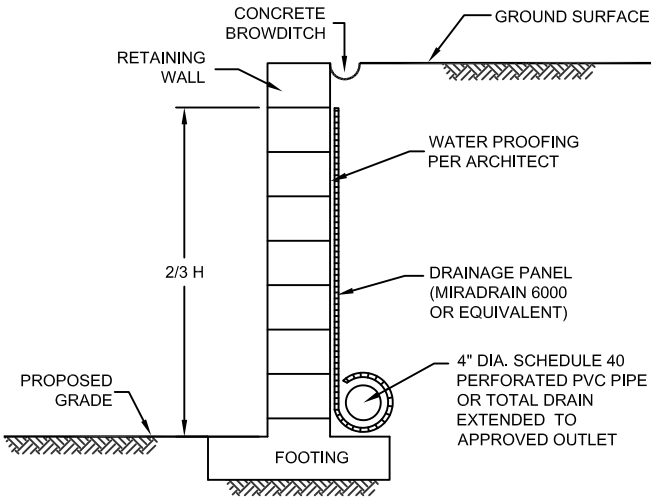

NOTE :

DRAIN SHOULD BE UNIFORMLY SLOPED TO GRAVITY OUTLET OR TO A SUMP WHERE WATER CAN BE REMOVED BY PUMPING

NO SCALE

TYPICAL RETAINING WALL DRAIN DETAIL

GEOCON INCORPORATED
GEOTECHNICAL ■ ENVIRONMENTAL ■ MATERIALS
6960 FLANDERS DRIVE - SAN DIEGO, CALIFORNIA 92121 - 2974
PHONE 858 558-6900 - FAX 858 558-6159

VALIANO (EDEN HILLS)
SAN DIEGO COUNTY, CALIFORNIA

AS / RA		DSK/GTYPD	DATE 05 - 13 - 2014	PROJECT NO. G1416 - 52 - 03	FIG. 11