# PRELIMINARY GRADING PLAN FOR TPM 20756 – RPL 5

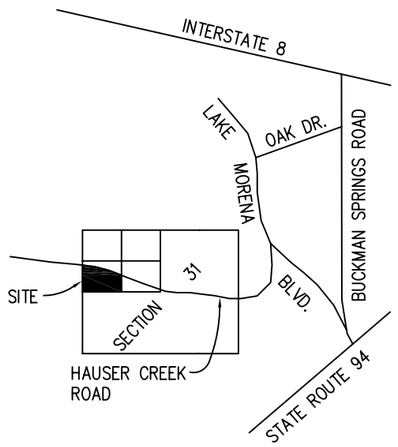


VICINITY MAP
N.T.S.

1" = 100'

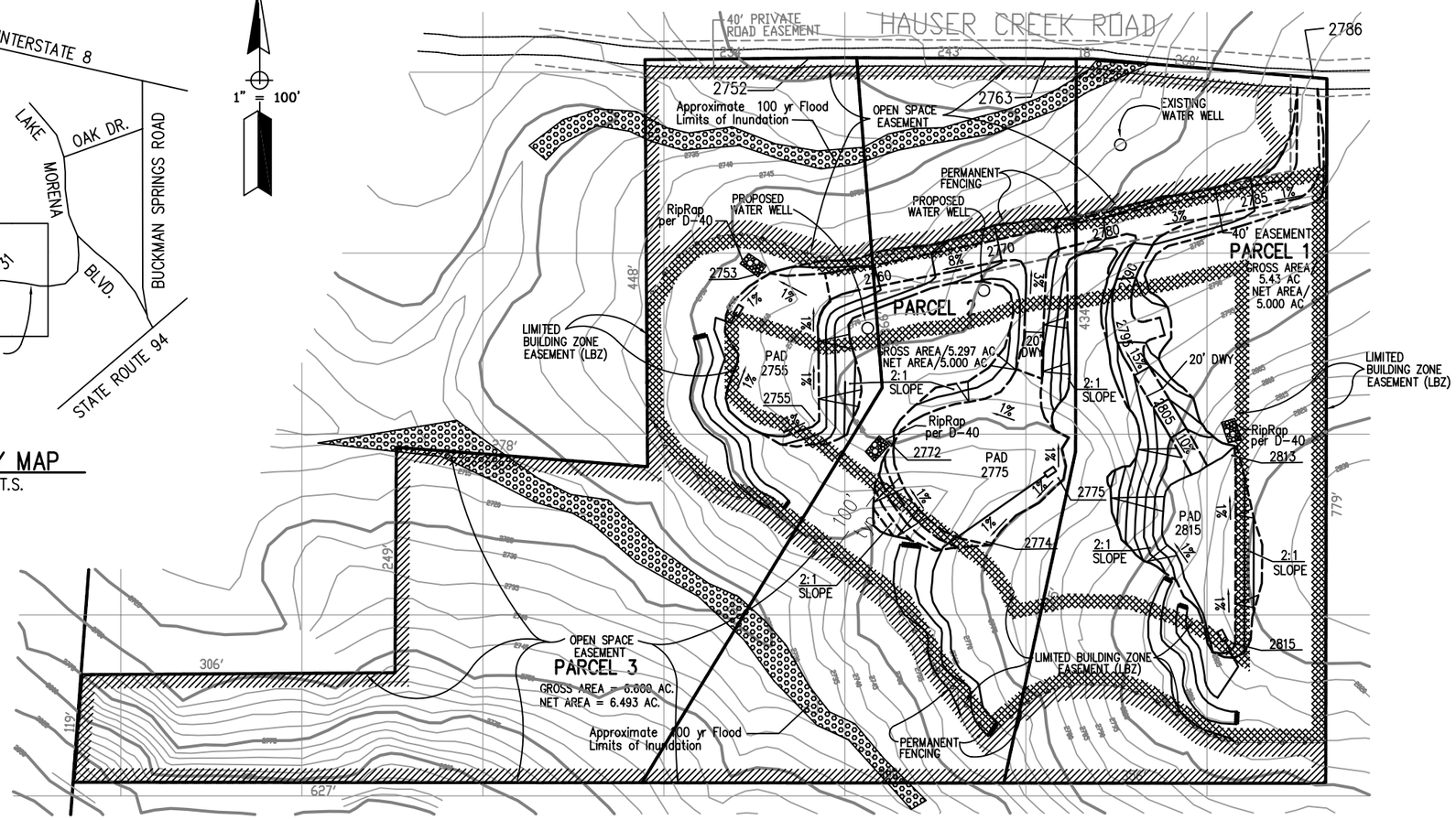


## LEGEND

- PROPOSED OPEN SPACE EASEMENT
- LIMITED BUILDING ZONE EASEMENT (LBZ)
- PERMANENT FENCING
- APPROXIMATE 100 YEAR FLOOD LIMITS OF INUNDATION

## OWNER/APPLICANT

IGNACIO R. ARELLANO CELIA A. ARELLANO
2510 PALM AVENUE
SAN DIEGO, CALIFORNIA 92154 (619)429-6176

## ENGINEER'S NAME

CJ AND ASSOCIATES
875 BOWSPRIT WAY
CHULA VISTA, CALIFORNIA 91914
619-210-3371 – FAX 619-651-1646

REGISTERED PROFESSIONAL ENGINEER
JOSE RAUL GOMEZ
NO. 43306
Expires 3/31/2010
CIVIL
STATE OF CALIFORNIA

JOSE RAUL GOMEZ, P.E.
EXP. 03/31/10

## ASSESSOR'S PARCEL NUMBER

607-090-17

## TOPOGRAPHIC SOURCE

COUNTY OF SAN DIEGO
200 SCALE TOPO PANEL NO'S 178-1917 & 174-1917

## GRADING QUANTITIES (APROX)

EXCAVATION = 8,500 CUBIC YARDS
BACKFILL = 8,500 CUBIC YARDS

## PRELIMINARY GRADING NOTE

"THIS PLAN IS PROVIDED TO ALLOW FOR FULL AND ADEQUATE DISCRETIONARY REVIEW OF A PROPOSED DEVELOPMENT PROJECT. THE PROPERTY OWNER ACKNOWLEDGES THAT ACCEPTANCE OR APPROVAL OF THIS PLAN DOES NOT CONSTITUTE AN APPROVAL TO PERFORM ANY GRADING SHOWN HEREON, AND AGREES TO OBTAIN A VALID GRADING PERMIT BEFORE COMMENCING SUCH ACTIVITY"

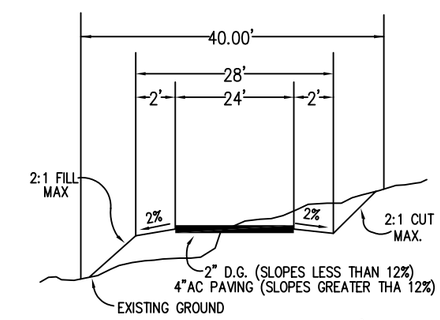


PROPOSED PRVT. ESM'T RD.
N.T.S.

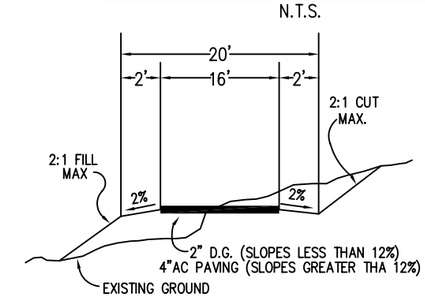


PROPOSED PRVT. DRIVEWAY
N.T.S.