Vegetated Swale TC-30

Design Considerations

- Tributary Area
- Area Required
- Slope
- Water Availability

Description

Vegetated swales are open, shallow channels with vegetation covering the side slopes and bottom that collect and slowly convey runoff flow to downstream discharge points. They are designed to treat runoff through filtering by the vegetation in the channel, filtering through a subsoil matrix, and/or infiltration into the underlying soils. Swales can be natural or manmade. They trap particulate pollutants (suspended solids and trace metals), promote infiltration, and reduce the flow velocity of stormwater runoff. Vegetated swales can serve as part of a stormwater drainage system and can replace curbs, gutters and storm sewer systems.

Targeted Constituents

☑	Sediment	▲
☑	Nutrients	●
☑	Trash	●
☑	Metals	▲
☑	Bacteria	●
☑	Oil and Grease	▲
☑	Organics	▲

Legend ***(Removal Effectiveness)***

● Low ■ High

▲ Medium

California Experience

Caltrans constructed and monitored six vegetated swales in southern California. These swales were generally effective in reducing the volume and mass of pollutants in runoff. Even in the areas where the annual rainfall was only about 10 inches/yr, the vegetation did not require additional irrigation. One factor that strongly affected performance was the presence of large numbers of gophers at most of the sites. The gophers created earthen mounds, destroyed vegetation, and generally reduced the effectiveness of the controls for TSS reduction.

Advantages

- If properly designed, vegetated, and operated, swales can serve as an aesthetic, potentially inexpensive urban development or roadway drainage conveyance measure with significant collateral water quality benefits.

ATTACHMENT E

TREATMENT BMP DATASHEET

CASQA

- Roadside ditches should be regarded as significant potential swale/buffer strip sites and should be utilized for this purpose whenever possible.

Limitations

- Can be difficult to avoid channelization.
- May not be appropriate for industrial sites or locations where spills may occur
- Grassed swales cannot treat a very large drainage area. Large areas may be divided and treated using multiple swales.
- A thick vegetative cover is needed for these practices to function properly.
- They are impractical in areas with steep topography.
- They are not effective and may even erode when flow velocities are high, if the grass cover is not properly maintained.
- In some places, their use is restricted by law: many local municipalities require curb and gutter systems in residential areas.
- Swales are mores susceptible to failure if not properly maintained than other treatment BMPs.

Design and Sizing Guidelines

- Flow rate based design determined by local requirements or sized so that 85% of the annual runoff volume is discharged at less than the design rainfall intensity.
- Swale should be designed so that the water level does not exceed 2/3rds the height of the grass or 4 inches, which ever is less, at the design treatment rate.
- Longitudinal slopes should not exceed 2.5%
- Trapezoidal channels are normally recommended but other configurations, such as parabolic, can also provide substantial water quality improvement and may be easier to mow than designs with sharp breaks in slope.
- Swales constructed in cut are preferred, or in fill areas that are far enough from an adjacent slope to minimize the potential for gopher damage. Do not use side slopes constructed of fill, which are prone to structural damage by gophers and other burrowing animals.
- A diverse selection of low growing, plants that thrive under the specific site, climatic, and watering conditions should be specified. Vegetation whose growing season corresponds to the wet season are preferred. Drought tolerant vegetation should be considered especially for swales that are not part of a regularly irrigated landscaped area.
- The width of the swale should be determined using Manning's Equation using a value of 0.25 for Manning's n.

The topography of the site should permit the design of a channel with appropriate slope and cross-sectional area. Site topography may also dictate a need for additional structural controls. Recommendations for longitudinal slopes range between 2 and 6 percent. Flatter slopes can be used, if sufficient to provide adequate conveyance. Steep slopes increase flow velocity, decrease detention time, and may require energy dissipating and grade check. Steep slopes also can be managed using a series of check dams to terrace the swale and reduce the slope to within acceptable limits. The use of check dams with swales also promotes infiltration.

Additional Design Guidelines

Most of the design guidelines adopted for swale design specify a minimum hydraulic residence time of 9 minutes. This criterion is based on the results of a single study conducted in Seattle, Washington (Seattle Metro and Washington Department of Ecology, 1992), and is not well supported. Analysis of the data collected in that study indicates that pollutant removal at a residence time of 5 minutes was not significantly different, although there is more variability in that data. Therefore, additional research in the design criteria for swales is needed. Substantial pollutant removal has also been observed for vegetated controls designed solely for conveyance (Barrett et al, 1998); consequently, some flexibility in the design is warranted.

Many design guidelines recommend that grass be frequently mowed to maintain dense coverage near the ground surface. Recent research (Colwell et al., 2000) has shown mowing frequency or grass height has little or no effect on pollutant removal.

Summary of Design Recommendations

1) The swale should have a length that provides a minimum hydraulic residence time of at least 10 minutes. The maximum bottom width should not exceed 10 feet unless a dividing berm is provided. The depth of flow should not exceed 2/3rds the height of the grass at the peak of the water quality design storm intensity. The channel slope should not exceed 2.5%.

2) A design grass height of 6 inches is recommended.

3) Regardless of the recommended detention time, the swale should be not less than 100 feet in length.

4) The width of the swale should be determined using Manning's Equation, at the peak of the design storm, using a Manning's n of 0.25.

5) The swale can be sized as both a treatment facility for the design storm and as a conveyance system to pass the peak hydraulic flows of the 100-year storm if it is located "on-line." The side slopes should be no steeper than 3:1 (H:V).

6) Roadside ditches should be regarded as significant potential swale/buffer strip sites and should be utilized for this purpose whenever possible. If flow is to be introduced through curb cuts, place pavement slightly above the elevation of the vegetated areas. Curb cuts should be at least 12 inches wide to prevent clogging.

7) Swales must be vegetated in order to provide adequate treatment of runoff. It is important to maximize water contact with vegetation and the soil surface. For general purposes, select fine, close-growing, water-resistant grasses. If possible, divert runoff (other than necessary irrigation) during the period of vegetation

establishment. Where runoff diversion is not possible, cover graded and seeded areas with suitable erosion control materials.

Maintenance

The useful life of a vegetated swale system is directly proportional to its maintenance frequency. If properly designed and regularly maintained, vegetated swales can last indefinitely. The maintenance objectives for vegetated swale systems include keeping up the hydraulic and removal efficiency of the channel and maintaining a dense, healthy grass cover.

Maintenance activities should include periodic mowing (with grass never cut shorter than the design flow depth), weed control, watering during drought conditions, reseeding of bare areas, and clearing of debris and blockages. Cuttings should be removed from the channel and disposed in a local composting facility. Accumulated sediment should also be removed manually to avoid concentrated flows in the swale. The application of fertilizers and pesticides should be minimal.

Another aspect of a good maintenance plan is repairing damaged areas within a channel. For example, if the channel develops ruts or holes, it should be repaired utilizing a suitable soil that is properly tamped and seeded. The grass cover should be thick; if it is not, reseed as necessary. Any standing water removed during the maintenance operation must be disposed to a sanitary sewer at an approved discharge location. Residuals (e.g., silt, grass cuttings) must be disposed in accordance with local or State requirements. Maintenance of grassed swales mostly involves maintenance of the grass or wetland plant cover. Typical maintenance activities are summarized below:

- Inspect swales at least twice annually for erosion, damage to vegetation, and sediment and debris accumulation preferably at the end of the wet season to schedule summer maintenance and before major fall runoff to be sure the swale is ready for winter. However, additional inspection after periods of heavy runoff is desirable. The swale should be checked for debris and litter, and areas of sediment accumulation.
- Grass height and mowing frequency may not have a large impact on pollutant removal. Consequently, mowing may only be necessary once or twice a year for safety or aesthetics or to suppress weeds and woody vegetation.
- Trash tends to accumulate in swale areas, particularly along highways. The need for litter removal is determined through periodic inspection, but litter should always be removed prior to mowing.
- Sediment accumulating near culverts and in channels should be removed when it builds up to 75 mm (3 in.) at any spot, or covers vegetation.
- Regularly inspect swales for pools of standing water. Swales can become a nuisance due to mosquito breeding in standing water if obstructions develop (e.g. debris accumulation, invasive vegetation) and/or if proper drainage slopes are not implemented and maintained.

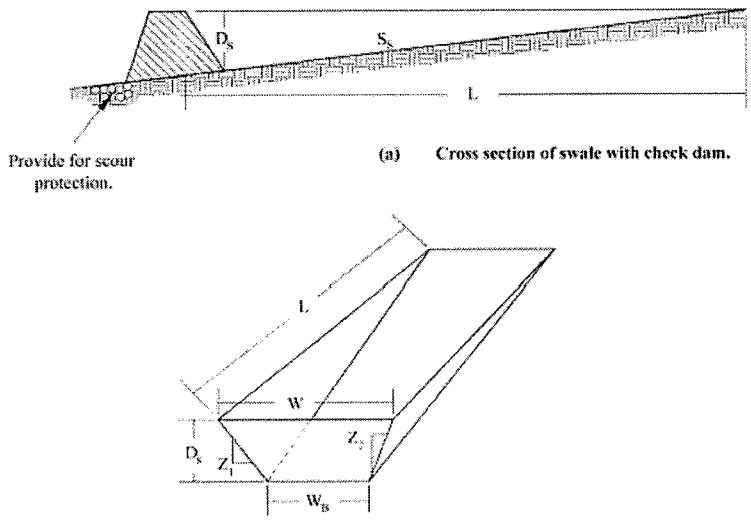

(a) Cross section of swale with check dam.

(b) Dimensional view of swale impoundment area.

Notation:

L = Length of swale impoundment area per check dam (ft)
D_S = Depth of check dam (ft)
S_S = Bottom slpe of swale (ft/ft)
W = Top width of check dam (ft)
W_B = Bottom width of check dam (ft)
$Z_{1\&2}$ = Ratio of horizontal to vertical change in swale side slope (ft/ft)

OPEN CHANNEL FLOW CALCULATION **ATTACHMENT E**

Manning's Equation

Section No. **ON-PAD**

Description: **TYPICAL CONCEPTUAL HOUSE PAD BIO FILTER**
CLUB ESTATES

			Flow at normal depth			Critical depth calculation		
			WSEn =	**802.12**	feet	WSEc =	**802.10**	feet
Design Q =	**0.10**	cfs	Q(calc) =	**0.10**	cfs	Q =	**0.10**	cfs
N =	**0.035**		A =	**0.11**	sq ft	A =	**0.07**	sf
So =	**0.020**	ft/ft	P =	**1.81**	feet	P =	**1.51**	ft
			R =	**0.06**	feet	R =	**0.05**	ft
			V =	**0.91**	fps	Vc =	**1.34**	fps
			Dn =	**0.12**		Dc =	**0.10**	ft
			T =	**1.80**	ft	T =	**1.50**	ft
			Inun Lt=	**0.90**	ft	Inun Lt=	**0.75**	ft
			Inun Rt=	**0.90**	ft	Inun Rt=	**0.75**	ft
			F =	**0.6580**		F =	**1.0534**	
			Subcritical Flow			Sc =	**0.0545**	

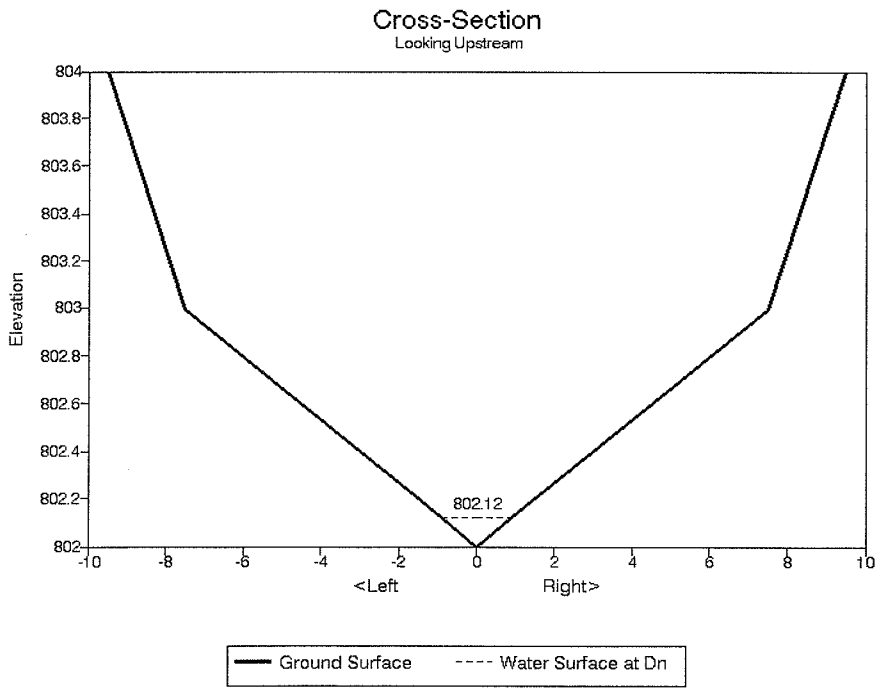

Cross-Section Data

Pt.	X	Y
1	-9.50	804.00
2	-7.50	803.00
3	0.00	802.00
4	7.50	803.00
5	9.50	804.00
6		
7		
8		
9		
10		
11		
12		
13		
14		
15		
16		
17		
18		
19		
20		

Table 3 Estimated Maintenance Costs (SEWRPC, 1991)

Component	Unit Cost	Swale Size (Depth and Top Width)		Comment
		1.5 Foot Depth, One-Foot Bottom Width, 10-Foot Top Width	3-Foot Depth, 3-Foot Bottom Width, 21-Foot Top Width	
Lawn Mowing	$0.85 / 1,000 ft^2/ mowing	$0.14 / linear foot	$0.21 / linear foot	Lawn maintenance area=(top width + 10 feet) x length. Mow eight times per year
General Lawn Care	$9.00 / 1,000 ft^2/ year	$0.18 / linear foot	$0.28 / linear foot	Lawn maintenance area = (top width + 10 feet) x length
Swale Debris and Litter Removal	$0.10 / linear foot / year	$0.10 / linear foot	$0.10 / linear foot	--
Grass Reseeding with Mulch and Fertilizer	$0.30 / yd^2	$0.01 / linear foot	$0.01 / linear foot	Area revegetated equals 1% of lawn maintenance area per year
Program Administration and Swale Inspection	$0.15 / linear foot / year, plus $25 / inspection	$0.15 / linear foot	$0.15 / linear foot	Inspect four times per year
Total	--	**$0.58 / linear foot**	**$ 0.75 / linear foot**	--

ATTACHMENT F

ATTACHMENT G

FISCAL RESOURCES

The proposed Bio-Filters (BMPs) are in the First Maintenance Category as described below.

Maintenance Category

Since these Bio-Filters are only being proposed on each conceptual building pad and drainage outlet on each individual private lot, the County should have only minimal concern for ongoing maintenance. The proposed BMPs inherently "take care of themselves", or property owners can naturally be expected to do so as an incident of taking care of their property.

Proposed BMPs :

§ On-Pad and Lot Bio-filters (Grass strip, Grass swale, vegetated buffer)

Mechanisms to Assure Maintenance:

1. Stormwater Ordinance Requirement: The County of San Diego Watershed Protection, Stormwater Management, and Discharge Control Ordinance (S.O.) requires this ongoing maintenance. In the event that the mechanism above proves ineffective, or in addition to enforcing that mechanism, civil action, criminal action or administrative citation could also be pursued for violations of the ordinance.
2. Public Nuisance Abatement: Under the S.O. failure to maintain a BMP would constitute a public nuisance, which may be abated under the Uniform Public Nuisance Abatement Procedure. This provides an enforcement mechanism additional to the above, and would allow costs of maintenance to be billed to the owner, a lien placed on the property, and the tax collection process to be used.
3. Notice to Purchasers. Section 67.819(e) of the S.O. requires developers to provide clear written notification to persons acquiring land upon which a BMP is located, or others assuming a BMP maintenance obligation, of the maintenance duty.
4. Conditions in Ongoing Land Use Permits: For those applications (listed in S.O. Section 67.804) upon whose approval ongoing conditions may be imposed, a condition will be added which requires the owner of the land upon which the stormwater facility is located to maintain that facility in accordance with the requirements specified in the SWMP. Failure to perform maintenance may then be addressed as a violation of the permit, under the ordinance governing that permit process.
5. Subdivision Public Report: Tentative Map approvals will be conditioned to require that, prior to approval of a Final Map, the subdivider shall provide evidence to the Director of Public Works, that the subdivider has requested the California Department of Real Estate to include in the public report to be issued for the sales of lots within the subdivision, a notification regarding the maintenance requirement.

Funding:

None Required.

ATTACHMENT H

CERTIFICATION SHEET

This Stormwater Management Plan has been prepared under the direction of the following Registered Civil Engineer. The Registered Civil Engineer attests to the technical information contained herein and the engineering data upon which recommendations, conclusions, and decisions are based.

The combination of proposed construction and post-construction BMPs will reduce, to the maximum extent practicable, the expected pollutants and will not adversely impact the beneficial uses or water quality of the receiving waters.

SZYTEL ENGINEERING & SURVEYING, INC.

3/21/2008

By GARY M. SZYTEL, President
REGISTERED CIVIL ENGINEER 24080

REGISTERED PROFESSIONAL ENGINEER
GARY M. SZYTEL
No. 24080
Expires 12/31/2009
CIVIL
STATE OF CALIFORNIA

Hydrologic Soil Groups and Land Use Map

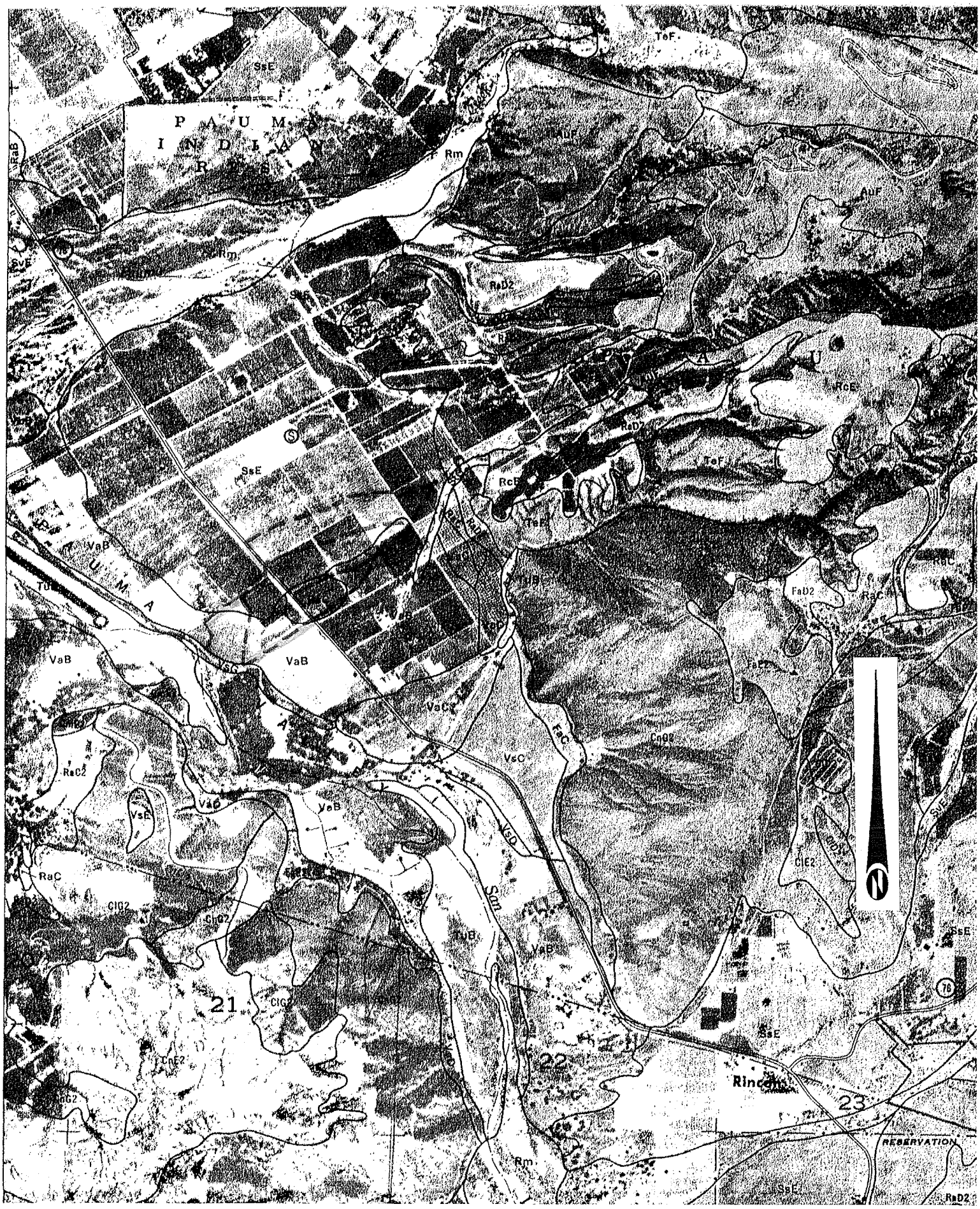

ATTACHMENT I

ATTACHMENT K

SR 76 Post-Development Pavement Widening Drainage Features

Characterization of Flows along Highway shoulders and outfalls

The natural topography and existing improvements along the project frontage is rolling and presents two sump drainage locations. The required pavement widening must necessarily follow these patterns. Drainage berms are proposed along the edges of the paved shoulders to direct flows from the road crown away from any existing or manufactured slopes to asphalt downdrains on either side of each inlet and outlet headwall location. The outfall flows will enter the proposed earthen trapezoidal channels for treatment of paving exposure and any sediment content while continuing toward the river confluence.

Drainage which will flow along the berm on the southeast bound offsite right turn lane will enter the existing asphalt improved driveway which is adjacent to the project's northwest property corner. This flow, however, will be a welcome reduction of the existing flows. Currently all of the flow from Basin 01 reaches that point and continues southwesterly toward the river. This project is proposing a storm drain system which will direct the Basin 01 flows to the proposed earthen channel along the project northwesterly boundary. Any overtopping of the existing asphalt improved driveway will move onto the project site which will be picked up in the proposed earthen channel for treatment as described above.

The overall strategy of project drainage design is one of improving the existing conditions both onsite and offsite for the neighboring properties. The reduction of present drainage burdens for adjacent properties is definitely a goal worth pursuing. At the same time, marked improvements in water quality treatment and flow control should be achieved with the creation of the three proposed earthen channels taking the place of the current unmanaged, untreated and unruly flows.

Please see Sheet 2 of the project Preliminary Grading Plan (enclosed) for paving and drainage details including cross sections, plan views and notations.

Hydrology Calculations for Highway Pavement Widening

For the worst case scenario, the majority of pavement flow reaches Basin 02 outfall:
Area=0.56 acres
C=0.90
i=0.2 inches per hour
Q_{WQ}*=0.1 cfs*

Hydrology Calculations for Basin 02

Area=95.9 acres
C=0.27
i=0.2 inches per hour
Q_{WQ}*=5.2 cfs*

Total Water Quality Flow for Basin 02

Q_{WQ}*=5.2 cfs + 0.1 cfs = 5.3 cfs*

ATTACHMENT K

Water Quality Hydraulic Calculations for Basin 02

Channel Calculator

Given Input Data:

Shape ..... Trapezoidal
Solving for ..... Depth of Flow
Flowrate ..... 5.3000 cfs
Slope ..... 0.0590 ft/ft
Manning's n 0.0350
Height ..... 36.0000 in
Bottom width ..... 24.0000 in
Left slope ..... 0.2500 ft/ft
Right slope ..... 0.2500 ft/ft

Computed Results:

Depth ..... 4.4237 in
Velocity ..... 4.1378 fps
Flow area 1.2809 ft2
Flow perimeter ..... 60.4790 in
Hydraulic radius ..... 3.0498 in
Top width ..... 59.3898 in
Area 42.0000 ft2
Perimeter ..... 320.8636 in
Percent full ..... 12.2881 %