SAN DIEGO COUNTY
DEPARTMENT OF PUBLIC WORKS

DESIGN STANDARDS

Published by the Department of Public Works
CIP Project Development Section

October 2012

SAN DIEGO COUNTY
DEPARTMENT OF PUBLIC WORKS

INDEX OF DESIGN STANDARDS

NUMBER	TITLE
DS-01	TYPICAL ROADWAY SECTIONS
DS-02	HILLSIDE RESIDENTIAL STREET ALTERNATIVE NO. 1
DS-03	HILLSIDE RESIDENTIAL STREET ALTERNATIVE NO. 2
DS-04	HILLSIDE RESIDENTIAL STREET ALTERNATIVE NO. 3
DS-05	TEMPORARY TURNAROUND AT DEAD END STREET
DS-06	TURNAROUND DETAIL AND CALCULATIONS
DS-07	ASPHALT CONCRETE DRIVEWAY
DS-08	LOT GRADING
DS-09	FENCING CUT BANKS AND WALLS
DS-10	GRADING OF SLOPES
DS-11	REQUIRED SETBACKS
DS-12	CONSTRUCTION PLAN LINES, HATCH PATTERNS & SYMBOLS
DS-13A	STREET NAME SIGN FOR UNSIGNALIZED INTERSECTIONS
DS-13B	STREET NAME SIGN NOTES FOR UNSIGNALIZED INTERSECTIONS
DS-13C	STREET NAME SIGN DETAILS FOR UNSIGNALIZED INTERSECTIONS
DS-13D	STREET NAME SIGN FOR SIGNALIZED INTERSECTIONS
DS-13E	STREET NAME SIGN NOTES FOR SIGNALIZED INTERSECTIONS
DS-13F	SIGN MOUNTING DETAIL FOR SIGNALIZED INTERSECTIONS
DS-13G	ABBREVIATIONS FOR STREET NAME SIGNS
DS-14	DIP SECTION (PRIVATE ROAD)
DS-15	STREET KNUCKLE
DS-16	CLEAR SPACE EASEMENT MARKERS
DS-17	GATED DRIVEWAY ENTRANCE TYPE I
DS-18	GATED DRIVEWAY ENTRANCE TYPE II
DS-19	GATED DRIVEWAY ENTRANCE, TYPE III
DS-20A	CLEAR SPACE EASEMENT TYPE A
DS-20B	CLEAR SPACE EASEMENT TYPE B
DS-20C	LIMITED USE AREA -TYPE A
DS-20D	LIMITED USE AREA- TYPE B
DS-21A	CURB RAMP - TYPES A (NEW CONSTRUCTION)
DS-21B	CURB RAMP - TYPES B (NEW CONSTRUCTION)
DS-21C	CURB RAMP –TYPE C (EXISTING SIDEWALK)
DS-21D	CURB RAMP – TYPE D (ALLEY STREETS & DRIVEWAYS)
DS-21E	GENERAL NOTES FOR CURB RAMPS
DS-21F	CURB RAMP DETAILS
DS-22	TRENCH RESURFACING TYPE R
DS-23A	CABLE RAILING FOR RETAINING WALL
DS-23B	CABLE RAILING DETAILS

ROADWAY SECTION

SYMMETRICAL ABOUT CENTERLINE

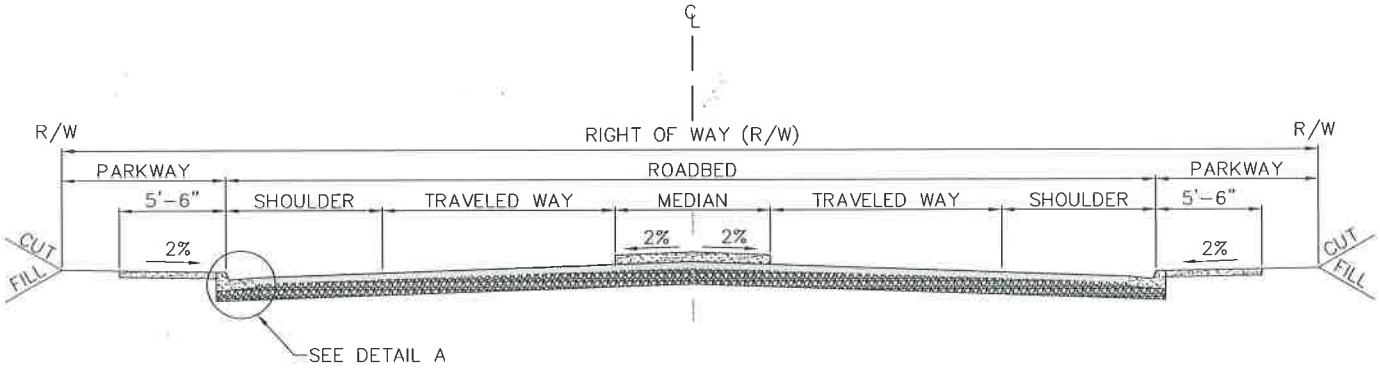

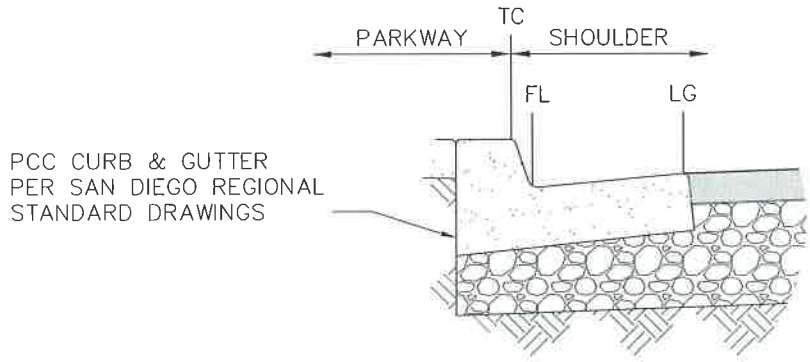

TC – TOP OF CURB LINE
FL – GUTTER FLOW LINE
LG – LIP OF GUTTER LINE

NOTE: AGGREGATE BASE TO EXTEND TO THE OUTSIDE EDGE UNDER PCC CURB & GUTTER

DETAIL A
NOT TO SCALE

NOTES:

1. REFER TO SAN DIEGO COUNTY PUBLIC ROAD STANDARDS (PRS) FOR ADDITIONAL ROADWAY REQUIREMENTS.
2. ADDITIONAL ROAD SURFACING AND R/W MAY BE REQUIRED FOR MOBILITY ELEMENT ROADS IN INDUSTRIAL/COMMERCIAL ZONES (4 FEET AND 12 FEET RESPECTIVELY).
3. ADDITIONAL 12 TO 14 FEET OF ROAD SURFACING AND R/W IS REQUIRED FOR EACH ADDITIONAL TURN LANE.
4. MOBILITY ELEMENT ROADS DESIGNATED WITH BIKE LANES WILL REQUIRE AN ADDITIONAL 10–12 FEET OF ROAD SURFACING AND R/W. THROUGH TRAFFIC LANES ADJACENT TO BIKE LANES REQUIRE 13 FEET WIDE LANES. REFER TO COUNTY OF SAN DIEGO PUBLIC ROAD STANDARDS, SECTION 7, "BIKEWAYS".
5. INTERIM ROADS SHALL HAVE A MINIMUM WIDTH OF 28 FEET OF A.C. ROAD SURFACING WITHIN 40 FEET OF GRADED ROAD BED. WIDTHS WILL BE LARGER IF TRAFFIC VOLUMES REQUIRE MORE TRAVEL LANES.
6. EARTHWORK AND ALL CUT AND FILL SLOPE INCLINATIONS SHALL CONFORM TO THE COUNTY GRADING ORDINANCE.

DRAWN BY: PBM	CHECKED BY: JSM	SAN DIEGO COUNTY DESIGN STANDARD	REVISIONS	APPROVED	DATE
RECOMMENDED BY: JEFF S. MOODY, P.E.			REV	JSM	10/2012
APPROVED BY COUNTY ENGINEER DATE: 10/15/12 MOHAMAD FAKHRRIDDINE, P.E. R.C.E. NO. 44520, EXP 3/31/2014		TYPICAL ROADWAY SECTIONS	DRAWING NUMBER	DS-01	

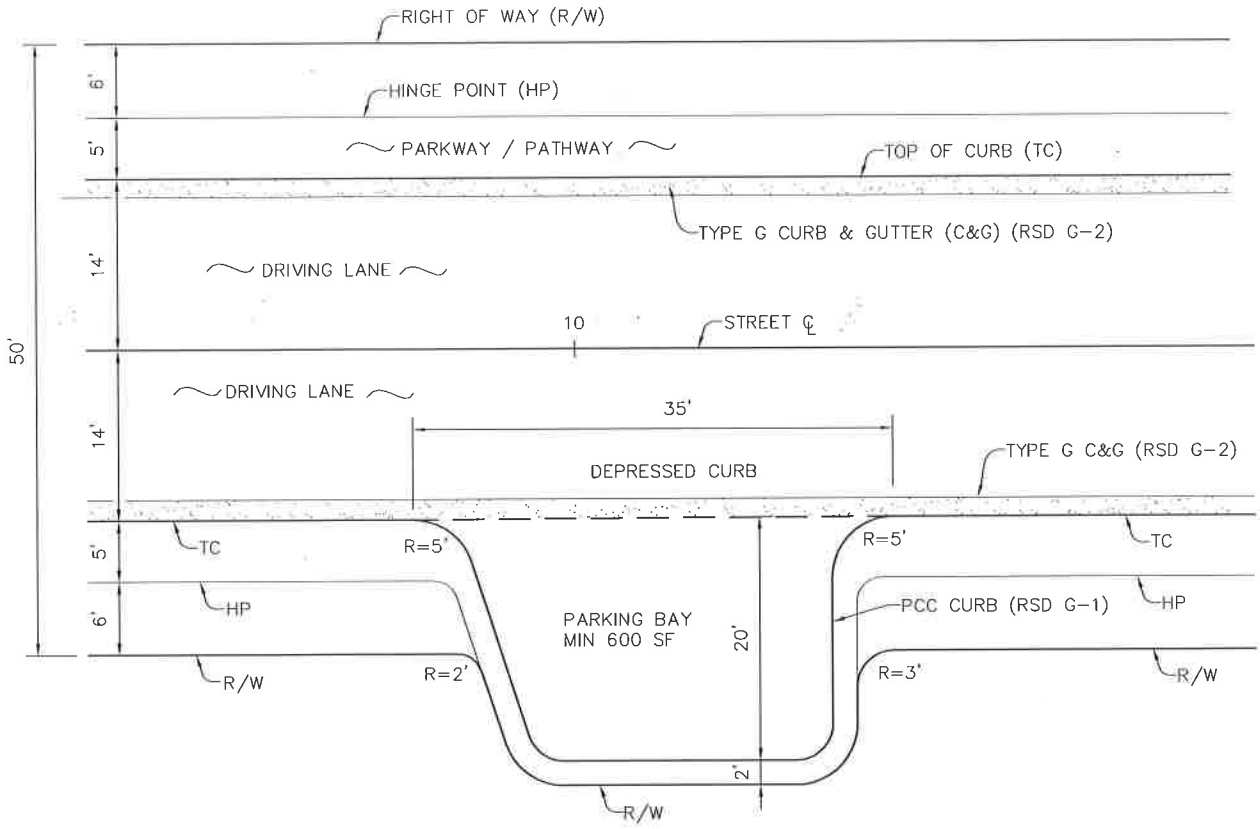

PLAN

NO SCALE

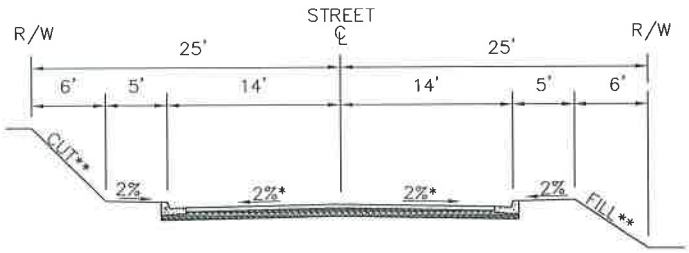

TYPICAL ROADWAY SECTION

NO SCALE

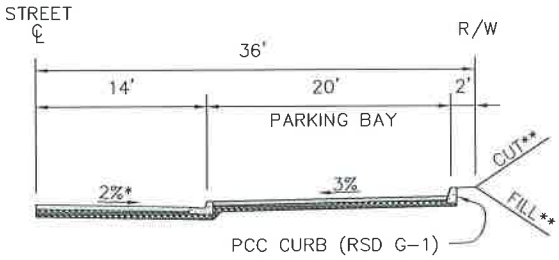

TYPICAL PARKING BAY SECTION

NO SCALE

* MAX 3% CROSSFALL OR SUPERELEVATION

** SLOPE INCLINATION SHALL CONFORM TO THE CURRENT COUNTY OF SAN DIEGO GRADING ORDINANCE

NOTES:

1. THIS STANDARD IS APPLICABLE ONLY TO CATEGORY 2 HILLSIDE RESIDENTIAL STREETS AS DEFINED IN THE COUNTY OF SAN DIEGO PUBLIC ROAD STANDARDS.
2. USE OF HILLSIDE RESIDENTIAL STREET STANDARDS ARE APPLICABLE ONLY TO NON-MOBILITY ELEMENT STREETS CLASSIFIED AS RESIDENTIAL, RESIDENTIAL CUL-DE-SAC, OR RESIDENTIAL LOOP STREETS, AND ARE NOT APPLICABLE TO STREETS IN AREAS ZONED FOR COMMERCIAL, INDUSTRIAL OR MULTIPLE RESIDENTIAL USE.
3. CURB AND GUTTER (C&G) SHALL CONFORM TO SAN DIEGO AREA REGIONAL STANDARD DRAWINGS (RSD), COUNTY OF SAN DIEGO PUBLIC ROAD STANDARDS, AND THESE DESIGN STANDARDS.
4. ONE 600 SQUARE FEET PERPENDICULAR PARKING BAY REQUIRED PER LOT. THE COUNTY ENGINEER MAY ALSO ESTABLISH ALTERNATE STANDARD TYPICAL SECTIONS WHICH WILL PROVIDE A MINIMUM OF TWO PARKING STALLS PER LOT.
5. EARTHWORK AND CUT AND FILL SLOPES SHALL CONFORM TO REQUIREMENTS OF THE COUNTY OF SAN DIEGO GRADING ORDINANCE.

DRAWN BY: PBM	CHECKED BY: JSM	SAN DIEGO COUNTY DESIGN STANDARD	REVISIONS	APPROVED	DATE
RECOMMENDED BY: JEFF S. MOODY, P.E.			REV	JSM	10/2012
APPROVED BY COUNTY ENGINEER DATE: 10/15/12 MOHAMAD FAKHRIDDINE, P.E. R.C.E. NO. 44520, EXP 3/31/2014		HILLSIDE RESIDENTIAL STREET ALTERNATIVE NO. 1	DRAWING NUMBER	DS-02

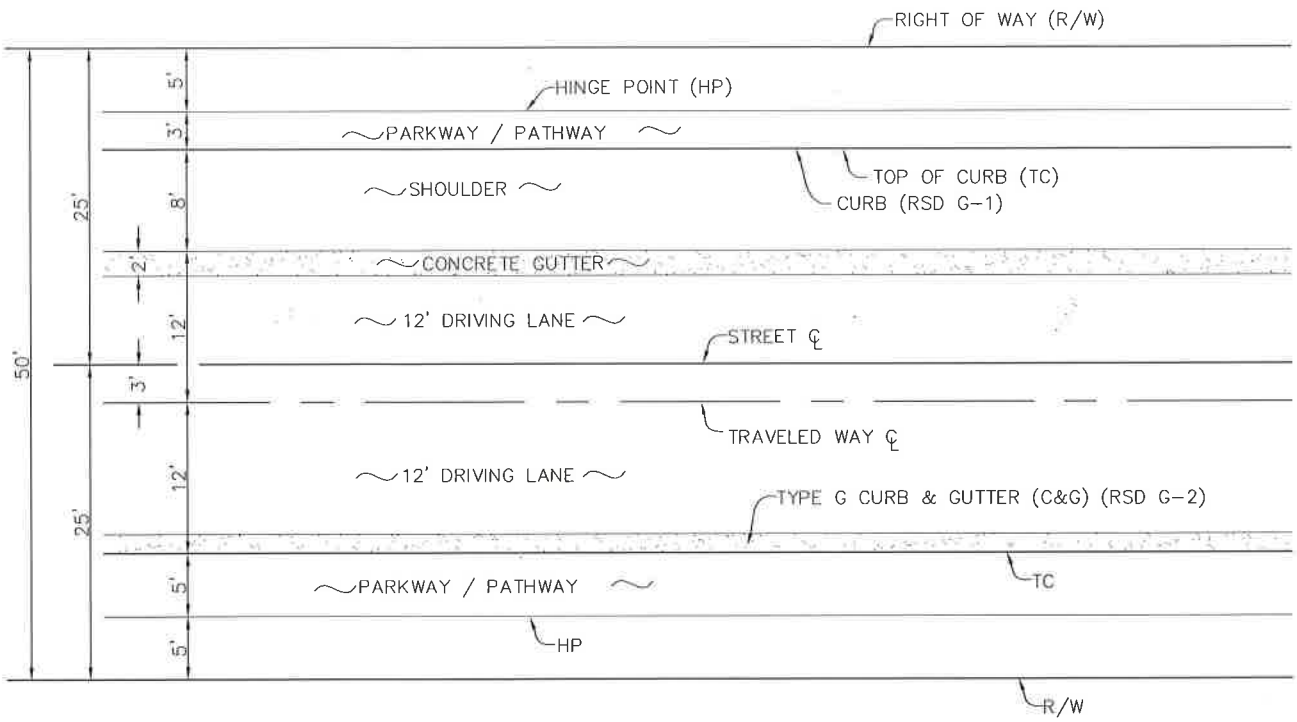

PLAN

NO SCALE

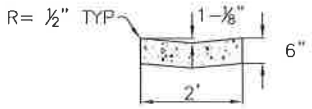

CONCRETE GUTTER DETAIL

NO SCALE

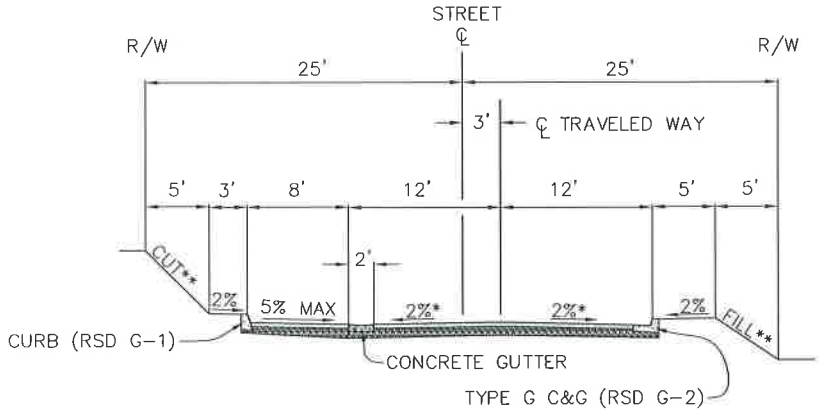

* MAX 3% CROSSFALL OR SUPERELEVATION

** SLOPE INCLINATION SHALL CONFORM TO THE COUNTY OF SAN DIEGO GRADING ORDINANCE

TYPICAL ROADWAY SECTION

NO SCALE

NOTES:

1. THIS STANDARD IS APPLICABLE ONLY TO CATEGORY 2 HILLSIDE RESIDENTIAL STREETS AS DEFINED IN THE COUNTY OF SAN DIEGO PUBLIC ROAD STANDARDS.
2. USE OF HILLSIDE RESIDENTIAL STREET STANDARDS ARE APPLICABLE ONLY TO NON-MOBILITY ELEMENT STREETS CLASSIFIED AS RESIDENTIAL, RESIDENTIAL CUL-DE-SAC, OR RESIDENTIAL LOOP STREETS, AND ARE NOT APPLICABLE TO STREETS IN AREAS ZONED FOR COMMERCIAL, INDUSTRIAL OR MULTIPLE RESIDENTIAL USE.
3. CURB AND GUTTER (C&G) SHALL CONFORM TO THE SAN DIEGO AREA REGIONAL STANDARD DRAWINGS (RSD), COUNTY OF SAN DIEGO PUBLIC ROAD STANDARDS, AND THESE DESIGN STANDARDS.
4. EARTHWORK AND ALL CUT AND FILL SLOPES SHALL CONFORM TO REQUIREMENTS OF THE COUNTY OF SAN DIEGO GRADING ORDINANCE.

DRAWN BY: PBM	CHECKED BY: JSM	SAN DIEGO COUNTY DESIGN STANDARD	REVISIONS	APPROVED	DATE
RECOMMENDED BY: JEFF S. MOODY, P.E.			REV	JSM	10/2012
APPROVED BY COUNTY ENGINEER DATE: 10/15/12 MOHAMAD FAKHRIDDINE, P.E. R.C.E. NO. 44520, EXP 3/31/2014		HILLSIDE RESIDENTIAL STREET ALTERNATIVE NO. 2			
			DRAWING NUMBER	DS-03	

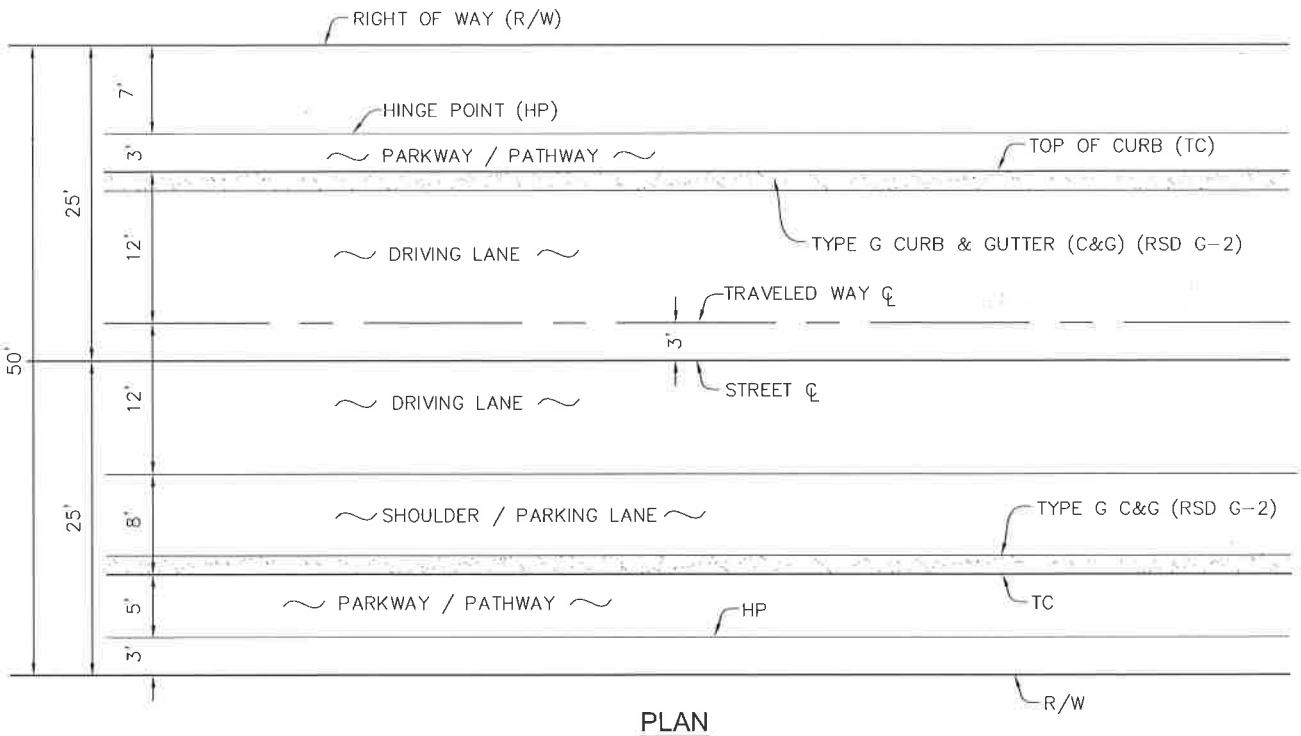

PLAN

NO SCALE

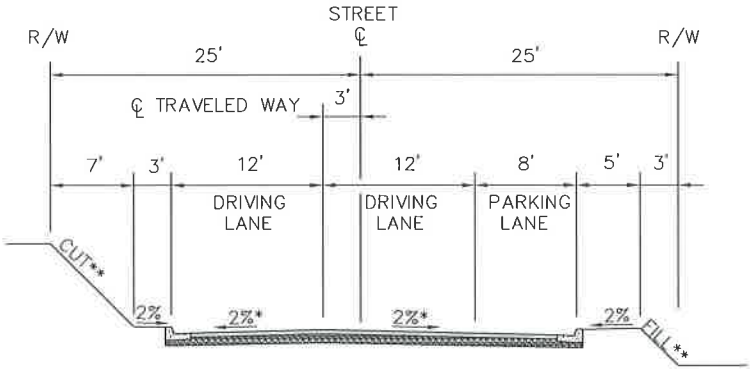

* MAX 3% CROSSFALL OR SUPERELEVATION

** SLOPE INCLINATION SHALL CONFORM TO THE COUNTY OF SAN DIEGO GRADING ORDINANCE.

TYPICAL ROADWAY SECTION

NO SCALE

NOTES:

1. THIS STANDARD IS APPLICABLE ONLY TO CATEGORY 2 HILLSIDE RESIDENTIAL STREETS AS DEFINED IN THE COUNTY OF SAN DIEGO PUBLIC ROAD STANDARDS (PRS).
2. USE OF HILLSIDE RESIDENTIAL STREET STANDARDS ARE APPLICABLE ONLY TO NON-MOBILITY ELEMENT STREETS CLASSIFIED AS RESIDENTIAL, RESIDENTIAL CUL-DE-SAC, OR RESIDENTIAL LOOP STREETS, AND ARE NOT APPLICABLE TO STREETS IN AREAS ZONED FOR COMMERCIAL, INDUSTRIAL OR MULTIPLE RESIDENTIAL USE.
3. CURB AND GUTTER (C&G) SHALL CONFORM TO THE SAN DIEGO AREA REGIONAL STANDARD DRAWINGS (RSD), THE COUNTY OF SAN DIEGO PUBLIC ROAD STANDARDS, AND THESE DESIGN STANDARDS.
4. EARTHWORK AND ALL CUT AND FILL SLOPES SHALL CONFORM TO REQUIREMENTS OF THE COUNTY OF SAN DIEGO GRADING ORDINANCE.

DRAWN BY: PBM	CHECKED BY: JSM	SAN DIEGO COUNTY DESIGN STANDARD	REVISIONS	APPROVED	DATE
RECOMMENDED BY: JEFF S. MOODY, P.E.			REV	JSM	10/2012
APPROVED BY COUNTY ENGINEER DATE: 10/15/12 MOHAMAD FAKHRIDDINE, P.E. R.C.E. NO. 44520, EXP 3/31/2014		HILLSIDE RESIDENTIAL STREET ALTERNATIVE NO. 3			
			DRAWING NUMBER	DS-04	

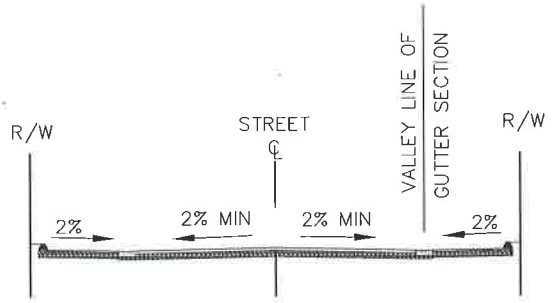

SECTION A-A
NO SCALE

LEGEND

- (A) PROVIDE DIKE OPENING FOR DRAINAGE WHEN REQUIRED
- (B) PERMANENT STREET SURFACING
- (C) CONCRETE GUTTER (SEE DETAIL)
- (D) TYPE G CURB & GUTTER (C&G) PER RSD G-2
- (E) TYPE B DIKE PER RSD G-5
- (F) SUBDIVISION LINE
- (G) GUARD POST BARRICADE PER RSD M-9

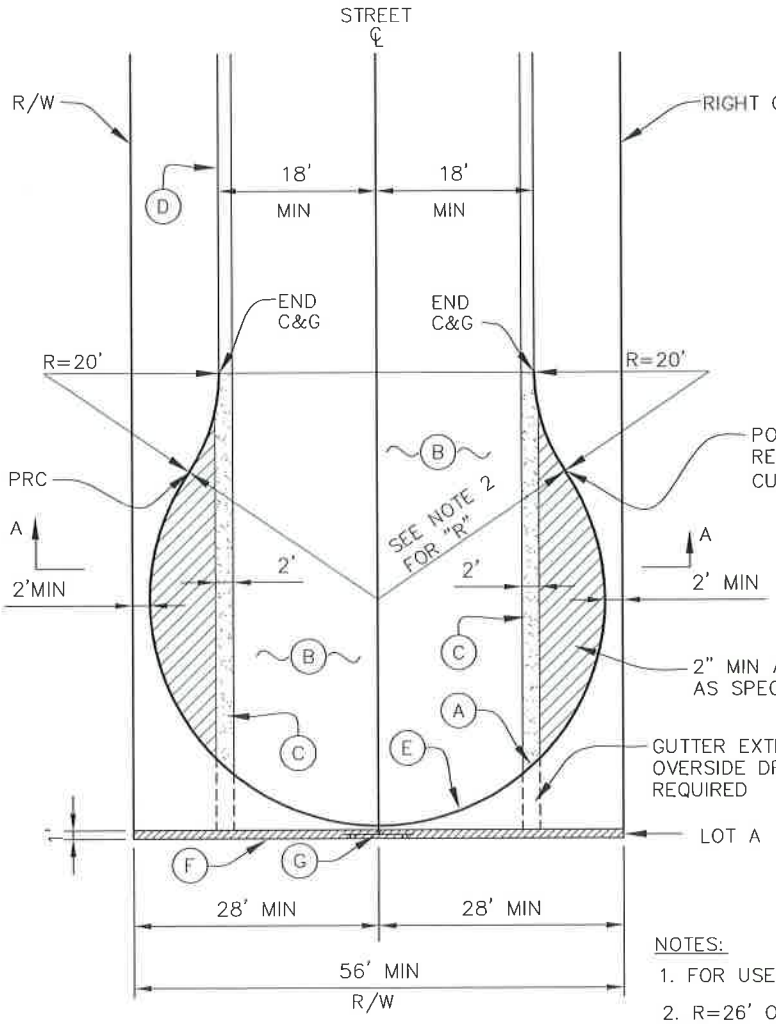

TEMPORARY TURNAROUND
NO SCALE

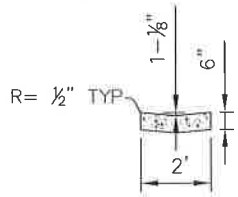

CONCRETE GUTTER DETAIL
NO SCALE

NOTES:

1. FOR USE ON EITHER 36' OR 40' WIDE STREETS.
2. R=26' OR 1/2 R/W-2' WHICHEVER IS GREATER.

DRAWN BY: PBM	CHECKED BY: JSM	SAN DIEGO COUNTY DESIGN STANDARD	REVISIONS	APPROVED	DATE
RECOMMENDED BY: JEFF S. MOODY, P.E.			REV	JSM	10/2012
APPROVED BY COUNTY ENGINEER		TEMPORARY TURNAROUND AT DEAD END STREET			
MOHAMAD FAKHRRIDDINE, P.E. DATE: 10/15/12 R.C.E. NO. 44520, EXP 3/31/2014			DRAWING NUMBER	DS-05	

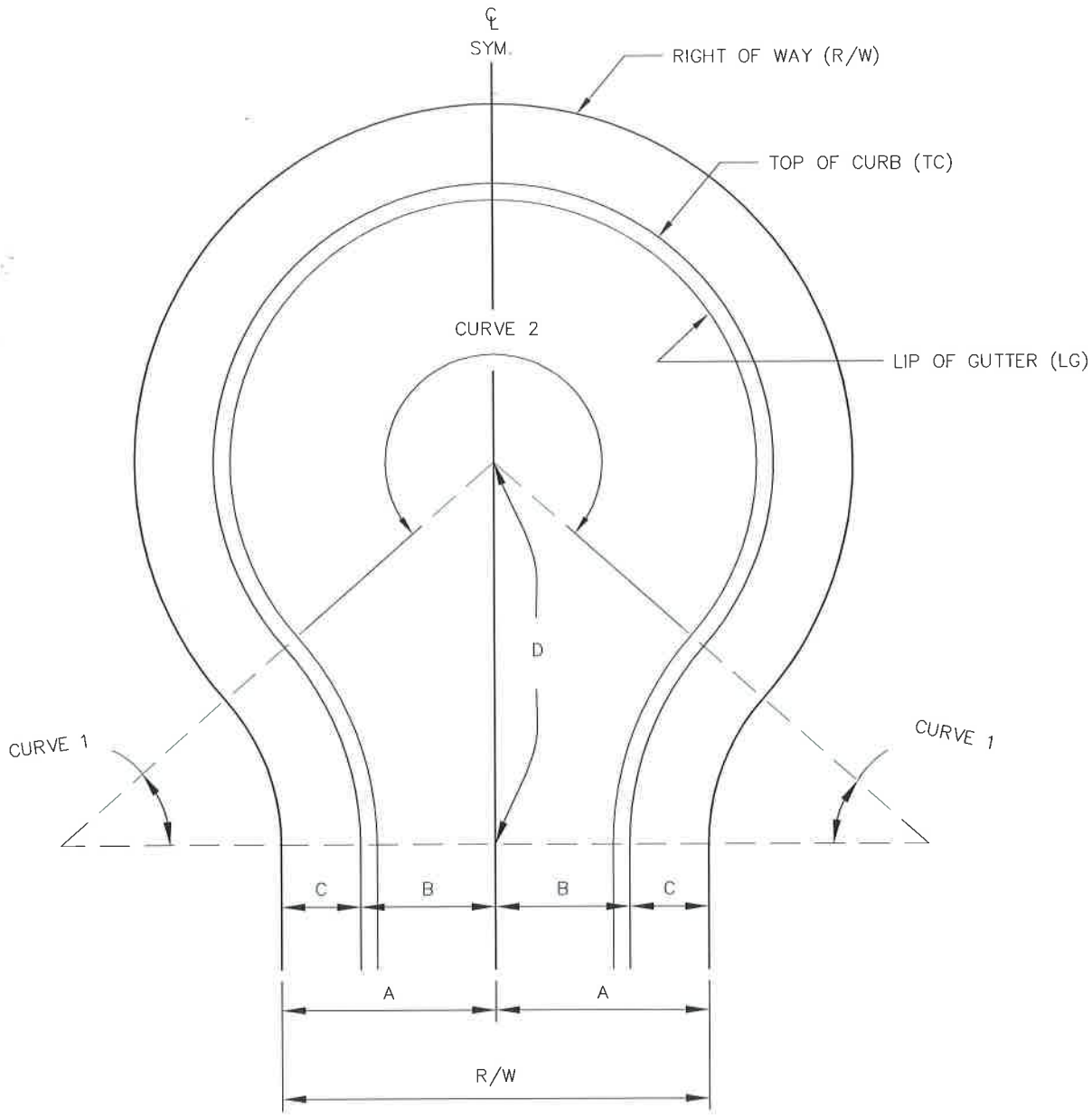

TURNAROUND

NO SCALE

DIMENSIONS					CURVE 1							CURVE 2				
R/W	A	B	C	D	△	CURB			PROP.			△	CURB		PROP.	
						R	L	T	R	L	T		R	L	R	L
52'	26'	16'	10'	50.95'	46° 42'30"	32'	26.09'	13.82'	22'	17.93'	9.50'	273°25'00"	38'	181.34'	48'	229.06'
56'	28'	18'	10'	50.99'	42° 50'00"	37'	27.66'	14.52'	27'	20.18'	10.59'	265°40'00"	38'	176.20'	48'	222.56'
60'	30'	20'	10'	68.15'	29° 35'31"	100'	51.65'	26.41'	90'	46.48'	23.77'	239°11'02"	38'	158.63'	48'	200.38'
72'	36'	26'	10'	81.39'	32° 51'36"	100'	57.35'	29.49'	90'	51.62'	26.54'	245°43'12"	50'	214.43'	60'	257.32'

DRAWN BY: PBM CHECKED BY: JSM

RECOMMENDED BY: JEFF S. MOODY, P.E.

APPROVED BY COUNTY ENGINEER

DATE: 10/15/12

MOHAMAD FAKHRRIDDINE, P.E.
R.C.E. NO. 44520, EXP 3/31/2014

SAN DIEGO COUNTY DESIGN STANDARD

TURNAROUND DETAIL AND CALCULATIONS

REVISIONS	APPROVED	DATE
REV	JSM	10/2012

DRAWING NUMBER DS-06

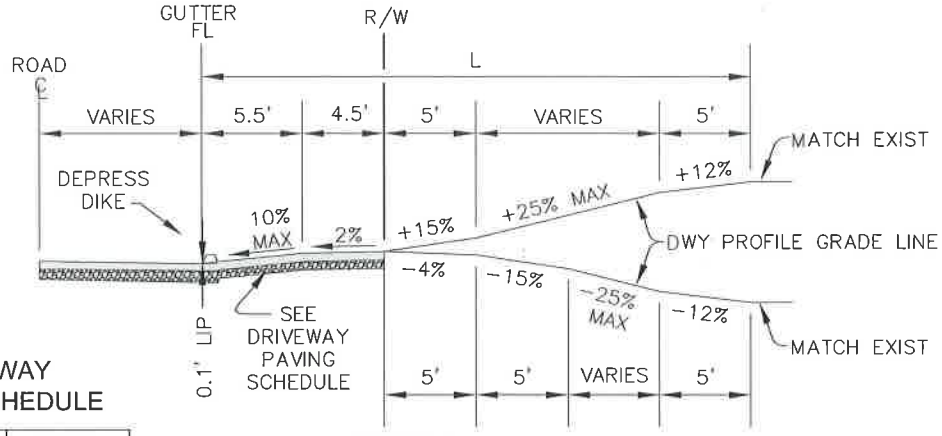

PROFILE
NO SCALE

DRIVEWAY PAVING SCHEDULE

DEPTH OF A.C.	GRADE
0.17' (2")	0–15%
0.25' (3")	15–20%
0.33' (4")	20–25%
ALL AC OVER 0.33' (4") MINIMUM CL II AB	

COMPACT ENTIRE STRUCTURAL SECTION TO 95% RELATIVE COMPACTION

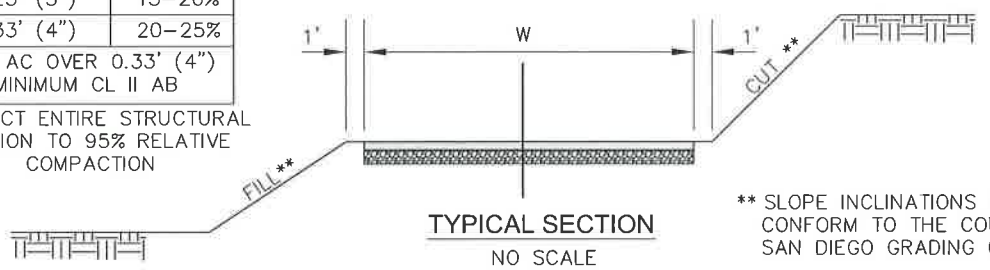

TYPICAL SECTION
NO SCALE

** SLOPE INCLINATIONS SHALL CONFORM TO THE COUNTY OF SAN DIEGO GRADING ORDINANCE

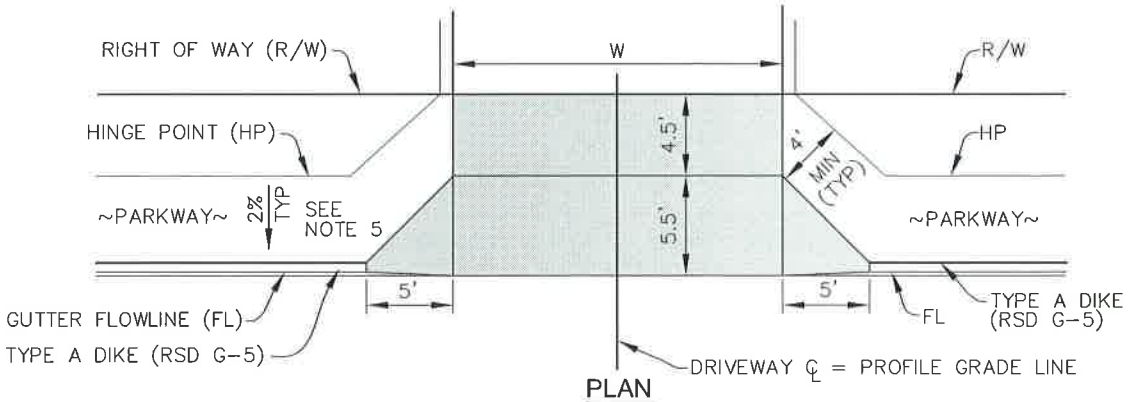

PLAN
NO SCALE

NOTES:

1. DRIVEWAY PROFILE, WIDTH (W) AND LENGTH (L) SHALL BE SHOWN ON PLANS.
2. DRIVEWAYS WITH GRADES GREATER THAN 15% SHALL BE SURFACED WITH ASPHALT CONCRETE (AC) OR PORTLAND CEMENT CONCRETE (PCC).
3. MAXIMUM GRADE BREAK 14% (5' MINIMUM VERTICAL CURVE PREFERRED).
4. SEE SAN DIEGO AREA REGIONAL STANDARD DRAWINGS G-15 & G-16 FOR DRIVEWAY LOCATION & WIDTH REQUIREMENTS AND G-14 SERIES FOR PCC DRIVEWAYS.
5. WHEN ROADWAY GRADE EXCEEDS 5% THE DOWNSLOPE PARKWAY SHALL BE SURFACED WITH 0.17' (2") THICK A.C. BETWEEN THE A.C. DIKE AND HINGE POINT FOR A DISTANCE OF 15 LF FROM THE EDGE OF DRIVEWAY. THE A.C. SURFACING SHALL MATCH THE PARKWAY GRADE.
6. ALL DRIVEWAYS SHALL SATISFY COUNTY SIGHT DISTANCE REQUIREMENTS.

DRAWN BY: PBM	CHECKED BY: JSM	SAN DIEGO COUNTY DESIGN STANDARD	REVISIONS	APPROVED	DATE
RECOMMENDED BY: JEFF S. MOODY, P.E.			REV	JSM	10/2012
APPROVED BY COUNTY ENGINEER		ASPHALT CONCRETE DRIVEWAY			
DATE: 10/15/12					
MOHAMAD FAKHRIDDINE, P.E. R.C.E. NO. 44520, EXP 3/31/2014			DRAWING NUMBER	DS-07	

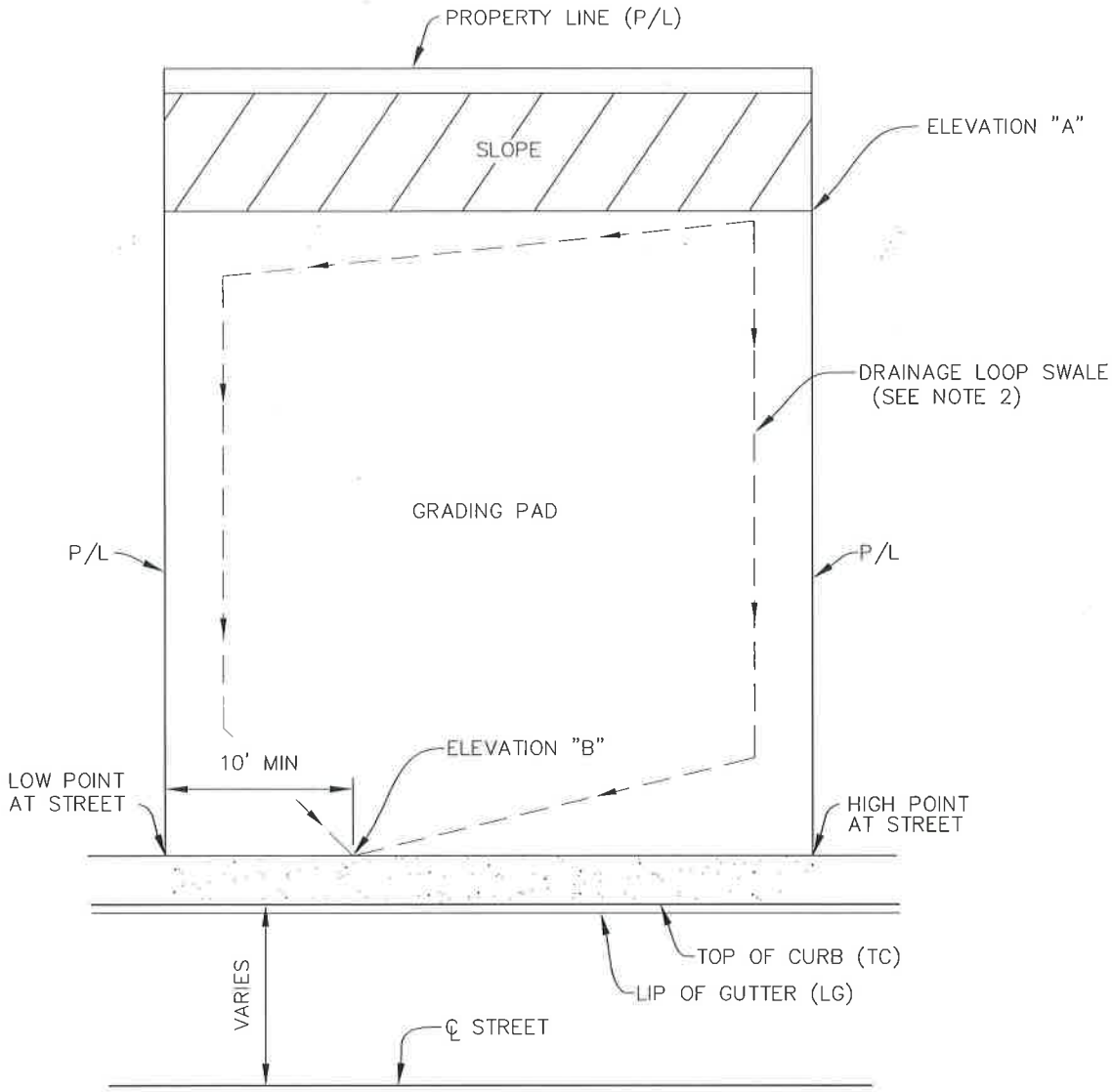

TYPICAL FINISHED GRADING

NO SCALE

NOTES:

1. ELEVATION "A" IS LOCATED AT THE MOST REMOTE CORNER OF THE LOT FROM THE DRAIN POINT "ELEVATION B". ELEVATION "A" SHALL EQUAL ELEVATION "B" PLUS 1% TIMES ONE-HALF THE PERIMETER OF THE LOT.
2. DRAINAGE LOOP SWALE SHALL HAVE 1% MINIMUM GRADIENT TOWARDS STREET OR OTHER DISCHARGE POINT.
3. ALL SLOPE SURFACES SHALL BE PROTECTED BY APPROVED EROSION CONTROL MATERIAL.

DRAWN BY: PBM	CHECKED BY: JSM	SAN DIEGO COUNTY DESIGN STANDARD	REVISIONS	APPROVED	DATE
RECOMMENDED BY: JEFF S. MOODY, P.E.			REV	JSM	10/2012
APPROVED BY COUNTY ENGINEER		LOT GRADING			
DATE: 10/15/12					
MOHAMAD FAKHRRIDDINE, P.E. R.C.E. NO. 44520, EXP 3/31/2014			DRAWING NUMBER	DS-08	

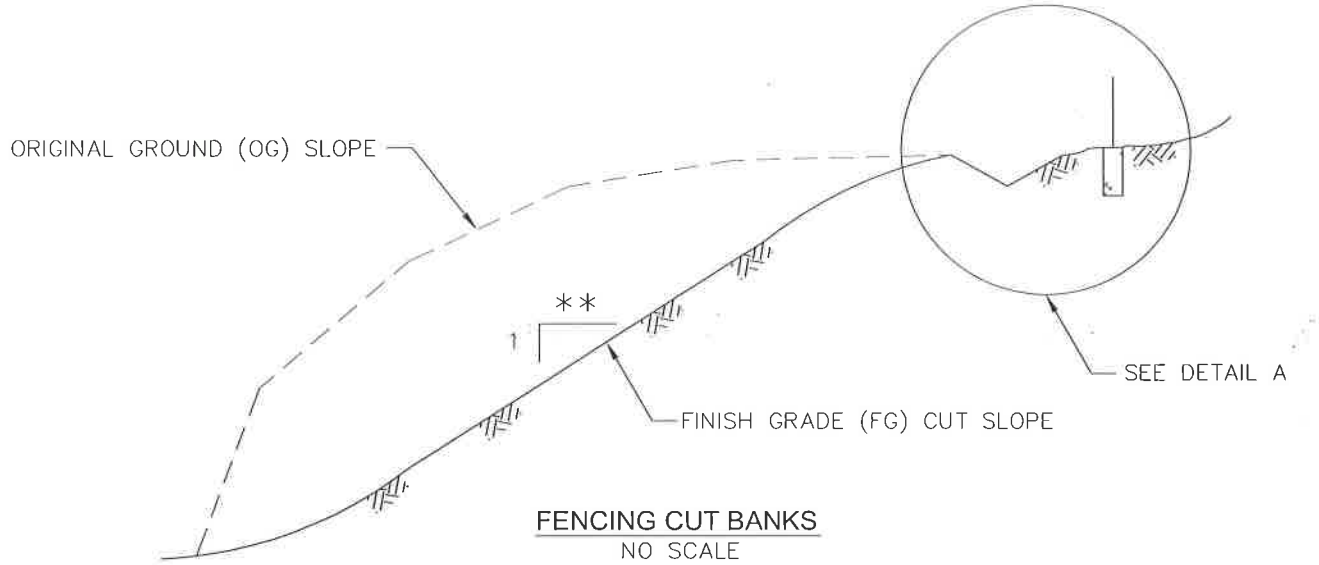

FENCING CUT BANKS
NO SCALE

** SLOPE INCLINATION SHALL CONFORM TO THE CURRENT COUNTY OF SAN DIEGO GRADING ORDINANCE

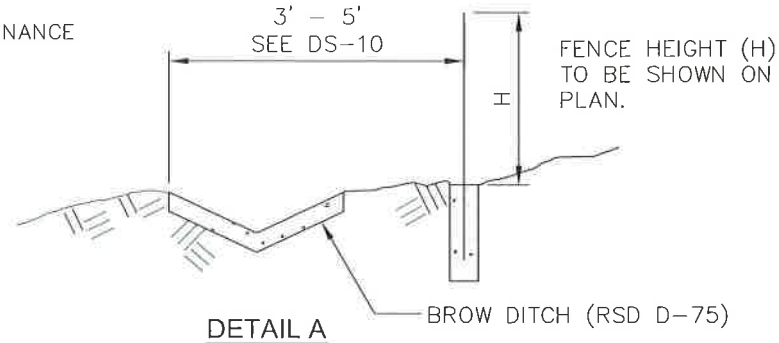

DETAIL A
NO SCALE

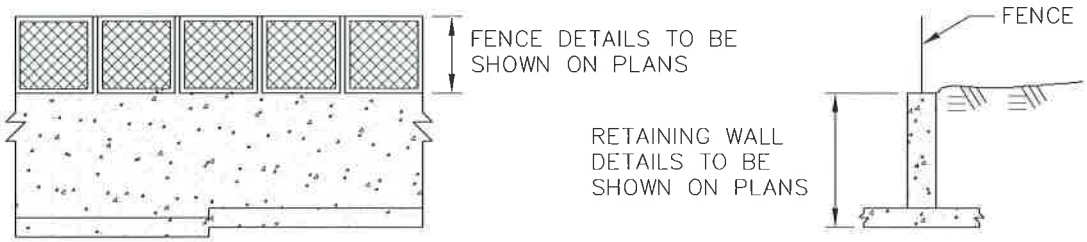

FENCING RETAINING WALLS
FOR WALL HEIGHTS GREATER THAN 4 FT.
NO SCALE

NOTES:

1. CHAIN LINK FENCE OR ALTERNATE FENCE ACCEPTABLE TO THE COUNTY ENGINEER SHALL BE INSTALLED ALONG THE TOP OF SLOPES EXCEEDING 15 FEET VERTICAL HEIGHT AND 3:1 (HORIZONTAL: VERTICAL) SLOPE AND ALONG THE TOP OF ALL WALLS EXCEEDING 4 FEET VERTICAL HEIGHT.

2. RETAINING WALLS AND FENCES SHALL BE CONSTRUCTED IN ACCORDANCE WITH SAN DIEGO COUNTY APPROVED PLANS.

DRAWN BY: PBM	CHECKED BY: JSM	SAN DIEGO COUNTY DESIGN STANDARD	REVISIONS	APPROVED	DATE
RECOMMENDED BY: JEFF S. MOODY, P.E.			REV	JSM	10/2012
APPROVED BY COUNTY ENGINEER DATE: 10/15/12 MOHAMAD FAKHRRIDDINE, P.E. R.C.E. NO. 44520, EXP 3/31/2014		FENCING CUT BANKS AND WALLS			
			DRAWING NUMBER	DS-09	

FOR FENCING REQUIREMENTS SEE DS-09
FOR SETBACK REQUIREMENTS SEE DS-11

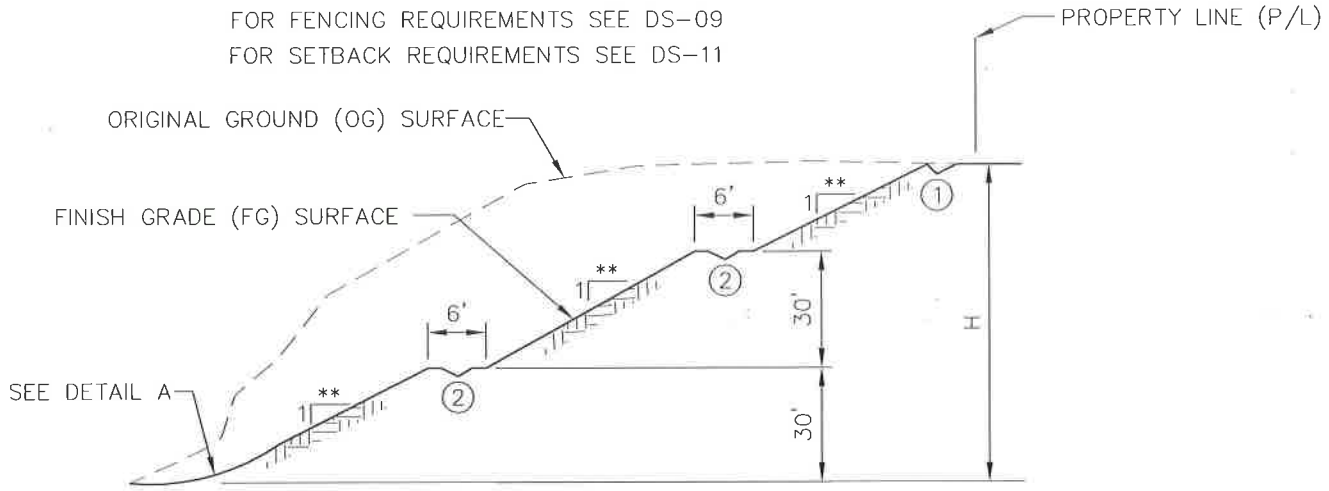

TYPICAL CUT SLOPE
NO SCALE

** SLOPE INCLINATION SHALL CONFORM TO THE CURRENT COUNTY OF SAN DIEGO GRADING ORDINANCE

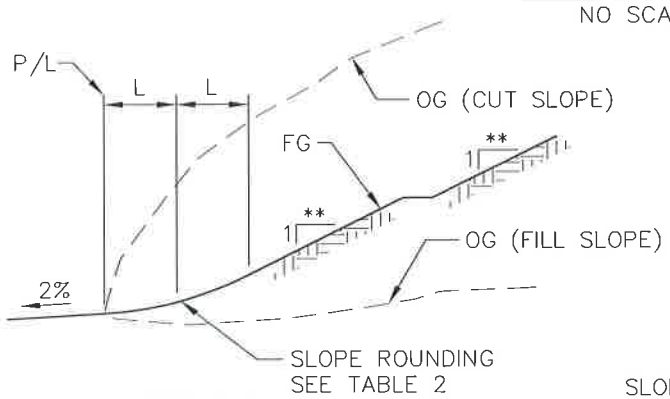

DETAIL A
NO SCALE

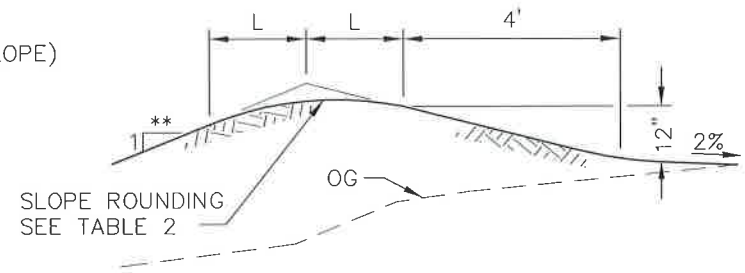

DETAIL B
NO SCALE

NOTES:

1. BROW DITCH PER RSD D-75
2. TERRACE DITCH PER RSD D-75
3. REMOVE SOIL MANTLE
4. BENCHES REQUIRED FOR ORIGINAL GROUND SLOPE GREATER THAN 5:1
5. ALL FILL MUST BE COMPACTED TO A MINIMUM 90% RELATIVE COMPACTION (RC) EXCEPT FOR THE OUTER 8" OF SLOPE SURFACE WHICH MAY BE GRID ROLLED TO 85% RC

TABLE 2
SLOPE ROUNDING

H FEET	L FEET
0'-5'	–
5'-20'	2.5'
20'-40'	5'
OVER 40'	10'

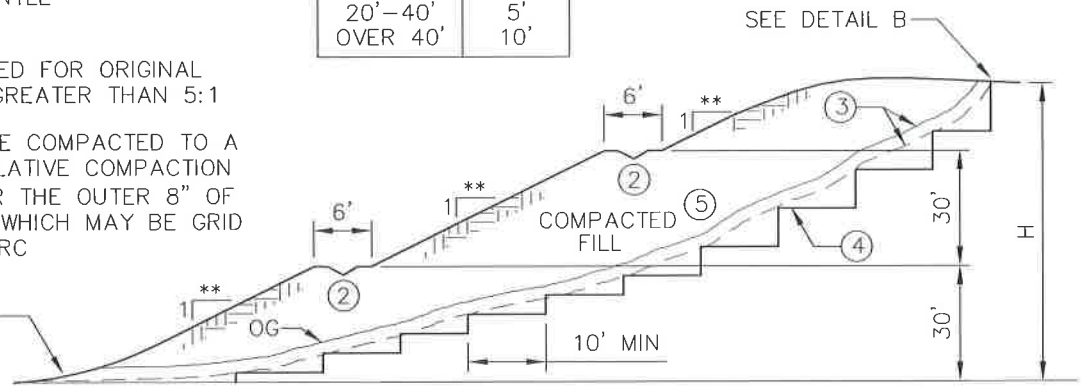

TYPICAL FILL SLOPE
NO SCALE

DRAWN BY: PBM	CHECKED BY: JSM	SAN DIEGO COUNTY DESIGN STANDARD	REVISIONS	APPROVED	DATE
RECOMMENDED BY: JEFF S. MOODY, P.E.			REV	JSM	10/2012
APPROVED BY COUNTY ENGINEER		GRADING OF SLOPES			
MOHAMAD FAKHRIDDINE, P.E. R.C.E. NO. 44520, EXP 3/31/2014	DATE: 10/15/12		DRAWING NUMBER	DS-10	

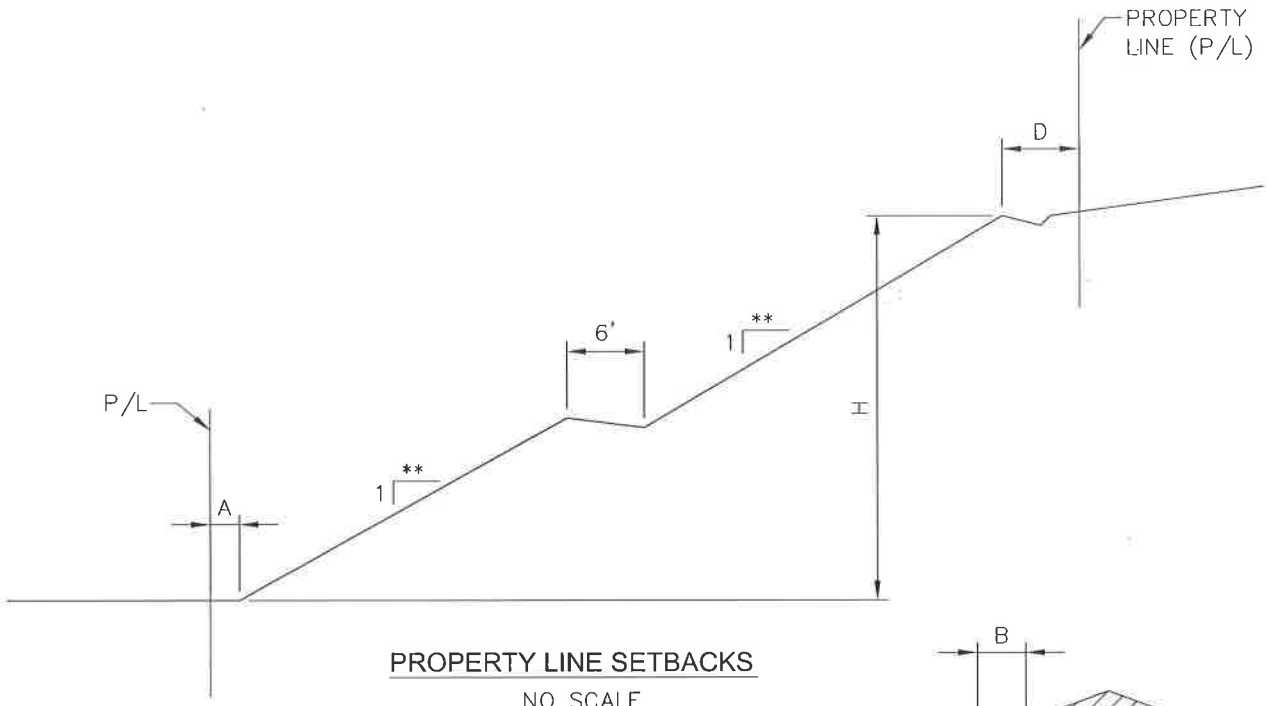

PROPERTY LINE SETBACKS

NO SCALE

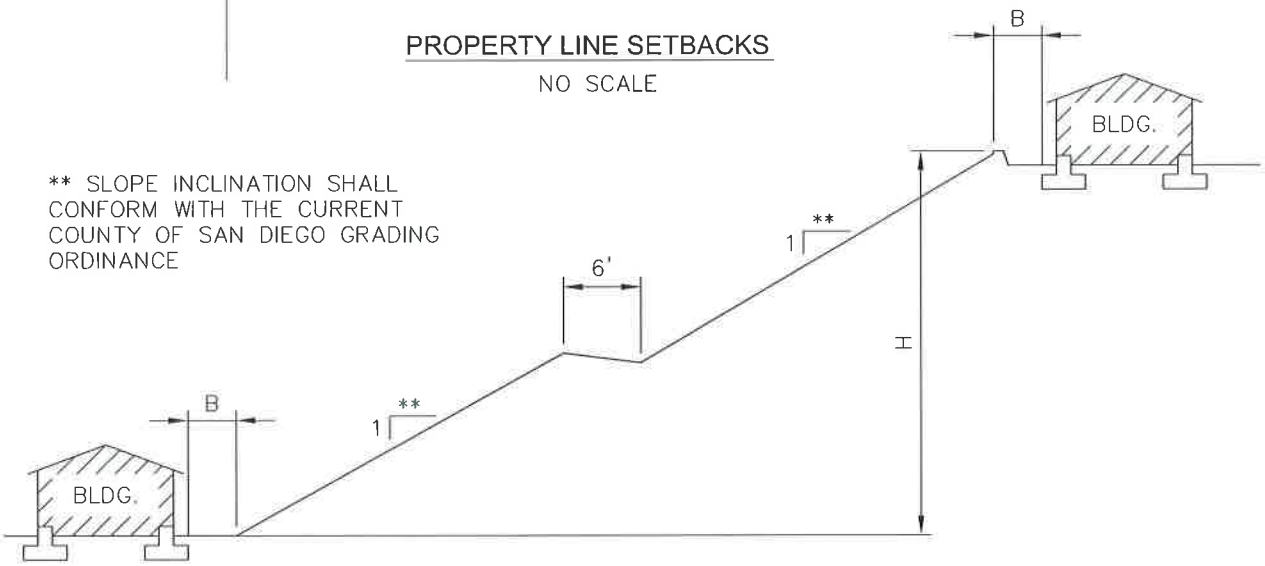

BUILDING SETBACKS

NO SCALE

REQUIRED SETBACKS			
H FEET	A	B	D
0–15	1'–6"	5'	3'
15–30	3'	5'	5'
OVER 30	5'	5'	5'

NOTES:

A = DISTANCE FROM TOE OF SLOPE TO PROPERTY LINE.
B = DISTANCE FROM EDGE OF FOUNDATION TO TOE OR TOP OF SLOPE.
D = DISTANCE FROM TOP OF SLOPE TO PROPERTY LINE.
H = TOTAL SLOPE HEIGHT MEASURED VERTICALLY.

DRAWN BY: PBM	CHECKED BY: JSM	SAN DIEGO COUNTY DESIGN STANDARD	REVISIONS	APPROVED	DATE
RECOMMENDED BY: JEFF S. MOODY, P.E.			REV	JSM	10/2012
APPROVED BY COUNTY ENGINEER		REQUIRED SETBACKS			
Mohamad DATE: 10/15/12			DRAWING NUMBER	DS-11	
MOHAMAD FAKHRRIDDINE, P.E. R.C.E. NO. 44520, EXP 3/31/2014					

ENVIRONMENTAL LINES

Area of Potential Effects — APE
Environmentally Sensitive Area — ESA
Project Impact Area — PIA
Irrigation — IRR — IRR — IRR — IRR

GENERAL LINES

AC Dike (Label Type)
Curb & Gutter (Label) — TC (Top of Curb) / LG (Lip of Gutter)
Ditch – Lined
Ditch – Unlined
Exist Edge of Pavement
Fence – Barbed Wire — X — X — X — X — X
Fence – Chainlink
Fence – Wood
Fiber Roll — FR — FR — FR — FR — FR
Guard Rail
Retaining Wall (CMU)
Retaining Wall (General, Label Type)
Right of Way — R/W
Slope Limit Lines
Storm Drain Pipe — SD — SD — SD — SD

UTILITY LINES

Cable TV — C — C — C — C — C
Electrical — E — E — E — E — E
Fiber Optic — FO — FO — FO — FO
Gas Line — G — G — G — G — G
Methane Gas — MG — MG — MG — MG — MG
Overhead Electrical — OH–E — OH–E — OH–E
Sewer Line — S — S — S — S — S
Telephone — T — T — T — T — T
Water Line — W — W — W — W — W

HATCH PATTERNS

Asphalt Concrete (AC)
Aggregate Base (AB)
Demolition/Const. Zone
Disintegrated Granite (DG)
Existing Ground
Hydroseed/Erosion Control
Pavement Removal
Portland Cement Concrte (PCC)
PCC in Plan View
PCC in Section View
Plane and Overlay AC

POINTS (Plan View)

BC & EC — Sta. BC, 2, RS, ℄, Sta. EC
Bench Mark
C Monument
PI or Angle PT

MISCELLANEOUS SYMBOLS

Contracted Line (not to scale)
Limit Arrows
Cutting Plane
Bridge or Box Culvert

Wing Wall
Culvert
Headwall or Endwall
Type L Wall

CADASTRAL LINES AND SYMBOLS

LAND LINES

Township Lines — Label
Section Lines — Label
Grand Line (Rancho Boundary or Indian Reservation) — Label
Subdivision Boundary Line — Label
City/County Boundary Line — County
Property Line — City
Lot Line
Easement Line

SECTION LINES

Section Corner: 2, 1, 11, 12
Section Center: Sec, 10
1/4 Section N–S: 5, 8
1/4 Section E–W: 6, 5

Basis of Bearings
California Coordinate System Zone 6
NAD 83

DRAWN BY: PBM	CHECKED BY: JSM	SAN DIEGO COUNTY DESIGN STANDARD	REVISIONS	APPROVED	DATE
RECOMMENDED BY: JEFF S. MOODY, P.E.			REV	JSM	10/2012
APPROVED BY COUNTY ENGINEER		CONSTRUCTION PLAN LINES, HATCH PATTERNS & SYMBOLS			
MOHAMAD FAKHRIDDINE, P.E. R.C.E. NO. 44520, EXP 3/31/2014	DATE: 10/15/12		DRAWING NUMBER	DS-12	

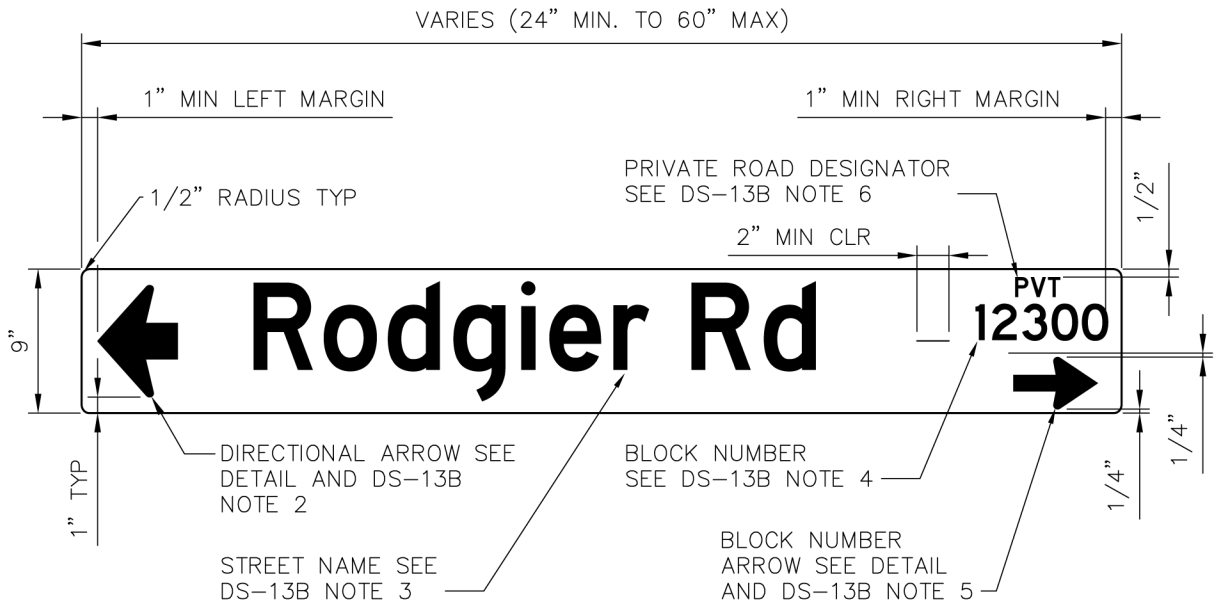

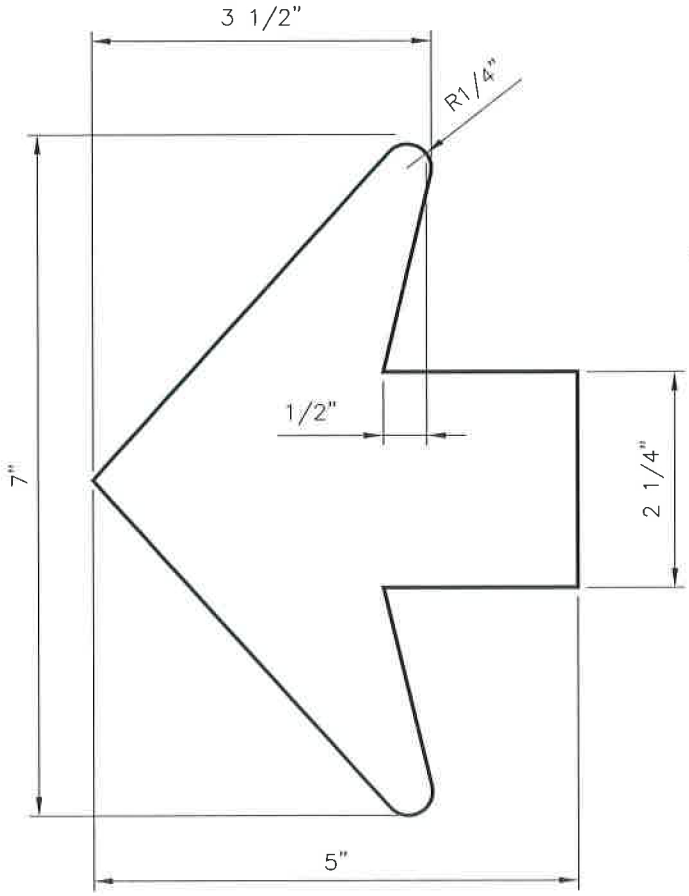

DIRECTIONAL ARROW DETAIL

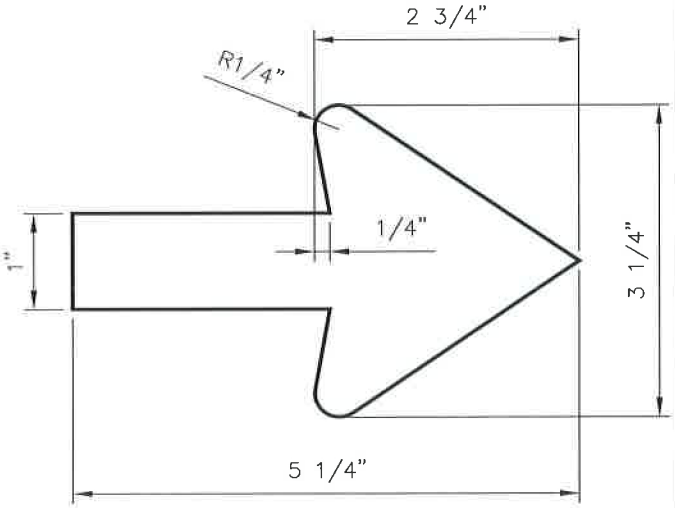

BLOCK NUMBER ARROW DETAIL

SEE NOTES ON DS-13B FOR ADDITIONAL SPECIFICATIONS AND REQUIREMENTS

DRAWN BY: GF	CHECKED BY: KVS	SAN DIEGO COUNTY DESIGN STANDARD	REVISIONS	APPROVED	DATE
RECOMMENDED BY: JEFF S. MOODY, P.E.			NEW	JSM	10/2012
APPROVED BY COUNTY ENGINEER DATE: 10/5/12 MOHAMAD FAKHRRIDDINE, P.E. R.C.E. NO. 44520, EXP 3/31/2014		STREET NAME SIGN FOR UNSIGNALIZED INTERSECTIONS	DRAWING NUMBER	DS-13A	

1. THE BLADES OF STREET NAME SIGNS AT UNSIGNALIZED INTERSECTIONS SHALL BE DOUBLE FACED WITH A GREEN BACKGROUND AND WHITE LEGEND. THE STREET NAME SIGN BLADE BLANK SHALL BE 0.125" THICK ALUMINUM ALLOY 6063–T6, 6061–T6, 5052–H38, OR APPROVED EQUAL. UNLESS OTHERWISE SPECIFIED, THE SMALLEST POSSIBLE BLANK WHICH MEETS THESE SPECIFICATIONS AND MAINTAINS AESTHETICS SHALL BE USED FOR EACH STREET NAME SIGN BLADE. BOTH FACES OF THE BLANK SHALL BE COMPLETELY COVERED WITH EITHER WHITE ASTM D4956 TYPE IX SIGN SHEETING (3M DIAMOND GRADE VIP WHITE 3990 OR APPROVED EQUAL) OR PROPOSED TYPE XI SIGN SHEETING (3M DIAMOND GRADE DG3 WHITE 4090 OR APPROVED EQUAL). THEN, 3M ELECTRONIC CUTTABLE TRANSPARENT FILM GREEN 1177 (OR APPROVED EQUAL) WITH THE DESIGNATED STREET NAME SIGN INFORMATION CUT OUT SHALL BE APPLIED TO BOTH SIGN FACES OF THE BLADE. THE YELLOW PRIVATE ROAD DESIGNATOR SHALL BE APPLIED PER NOTE 6. LASTLY, BOTH SIDES OF THE BLADE IS COVERED WITH PREMIUM CLEAR PROTECTIVE OVERLAY FILM (3M 1160 OR EQUIVALENT). ALL SIGN SHEETING AND FILMS USED ON EACH STREET NAME SIGN BLADE SHALL BE COMPATIBLE TO ENSURE MATERIAL WARRANTIES ARE EFFECTIVE.

2. THE DIRECTIONAL ARROW SHALL BE USED AT INTERSECTIONS THAT HAVE STREET NAME CHANGES. THE DIRECTIONAL ARROW INDICATES WHICH LEG OF THE INTERSECTION HAS THE RESPECTIVE STREET NAME. THE DIRECTIONAL ARROW IS DISPLAYED IN WHITE ON THE BLADE. THE COMPASS DIRECTION OF THE DIRECTIONAL ARROW FOR EACH STREET NAME SIGN BLADE SHALL BE SPECIFIED WHEN ORDERED.

3. THE STREET NAME IS DISPLAYED IN WHITE ON THE STREET NAME SIGN BLADE. ONLY THE OFFICIAL COUNTY RECORDED NAME AND SPELLING SHALL BE USED ON THE STREET NAME SIGN. ONLY COUNTY APPROVED ABBREVIATIONS PER DS–13G SHALL BE USED ON THE STREET NAME SIGN BLADES. THE STREET NAME SHALL BE CENTERED VERTICALLY ON EACH STREET NAME SIGN BLADE. THE STREET NAME LETTERING SHALL BE 6" UPPERCASE AND 4.5" LOWERCASE HIGHWAY GOTHIC FONT, WITH STYLE AND SPACING AS ESTABLISHED IN THE CALIFORNIA MANUAL ON UNIFORM TRAFFIC CONTROL DEVICES (CAMUTCD), CURRENT EDITION. STROKE WIDTH AND LETTER WIDTH USED FOR THE WHOLE STREET NAME MAY VARY FROM SERIES B TO SERIES E (REFER TO FHWA STANDARD SIGNS AND MARKINGS SIGN FONTS AT HTTP://MUTCD.FHWA.DOT.GOV/SHSE/ALPHABETS.PDF). THE MINIMUM GAP DISTANCE BETWEEN THE DIRECTIONAL ARROW AND THE STREET NAME SHALL EQUAL THE SPACING USED FOR THE BLANK SPACES IN THE STREET NAME.

4. THE BLOCK NUMBER IS DISPLAYED IN WHITE ON THE STREET NAME SIGN BLADE. THE BLOCK NUMBER LETTERING SHALL BE 3" HIGH HIGHWAY GOTHIC FONT WITH STYLE AND SPACING AS ESTABLISHED BY THE CAMUTCD, CURRENT EDITION. THE SERIES USED FOR THE WHOLE BLOCK NUMBER SHALL BE OF THE SAME SERIES THAT IS USED FOR THE STREET NAME.

5. THE BLOCK NUMBER ARROW IS DISPLAYED IN WHITE ON THE STREET NAME SIGN BLADE. THE BLOCK NUMBER ARROW SHALL BE CENTERED BELOW THE BLOCK NUMBER. THE COMPASS DIRECTION OF THE BLOCK NUMBER ARROW FOR EACH STREET NAME SIGN BLADE SHALL BE SPECIFIED WHEN ORDERED.

6. THE PRIVATE ROAD DESIGNATOR (PVT) IS ONLY USED ON STREET NAME BLADES FOR ROADS THAT ARE NOT MAINTAINED BY THE COUNTY OF SAN DIEGO (PRIVATE ROADS). THE PVT IS DISPLAYED IN YELLOW ON THE STREET NAME BLADE. THE PVT SHALL BE CENTERED ABOVE THE BLOCK NUMBER. THE PVT LETTERING SHALL BE 1 1/4" UPPERCASE HIGHWAY GOTHIC FONT SERIES E WITH STYLE AND SPACING AS ESTABLISHED BY THE CAMUTCD, CURRENT EDITION. THE PVT SHALL BE MADE OF ASTM D4956 TYPE I SHEETING (3M PRISMATIC ENGINEER GRADE YELLOW 3431 OR APPROVED EQUAL) AND PLACED ON THE STREET NAME SIGN BLADE PRIOR TO THE CLEAR PROTECTIVE OVERLAY SHEETING.

7. STREET NAME SIGNS SHALL BE MOUNTED ON POLES PER DS–13C. NO OTHER SIGNS SHALL BE MOUNTED ON STREET NAME SIGN POLES UNLESS TALLER POLES ARE SPECIFIED TO MEET CAMUTCD REQUIRED GROUND CLEARANCES FOR SIGNS.

DRAWN BY: GF	CHECKED BY: KVS	SAN DIEGO COUNTY DESIGN STANDARD	REVISIONS	APPROVED	DATE
RECOMMENDED BY: JEFF S. MOODY, P.E.			NEW	JSM	10/2012
APPROVED BY COUNTY ENGINEER DATE: 10/15/12 MOHAMAD FAKHRRIDDINE, P.E. R.C.E. NO. 44520, EXP 3/31/2014		STREET NAME SIGN NOTES FOR UNSIGNALIZED INTERSECTIONS			
			DRAWING NUMBER	DS-13B	

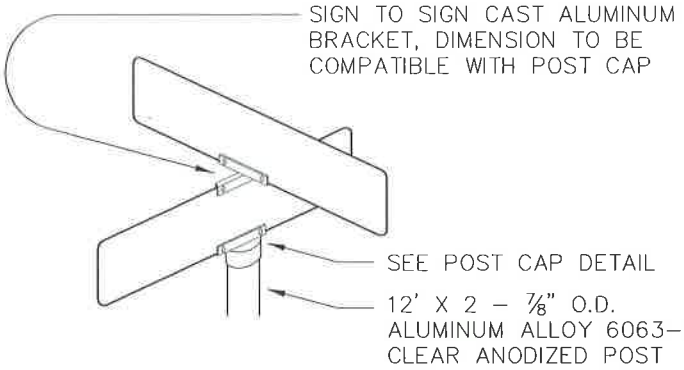

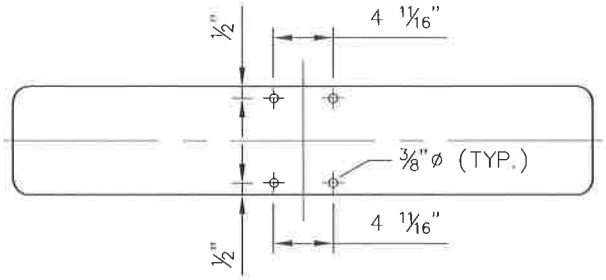

TYPICAL STREET NAME BLADE DETAIL

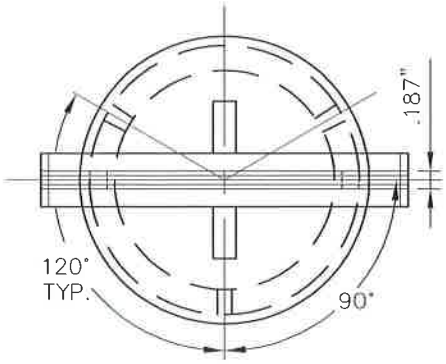

POST CAP DETAIL

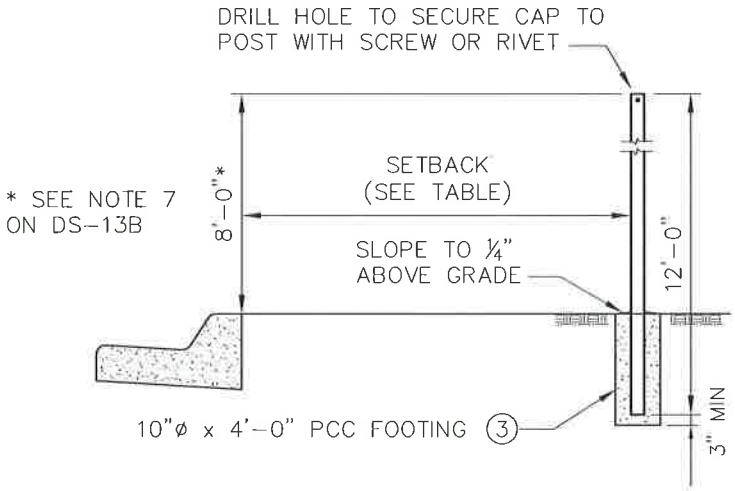

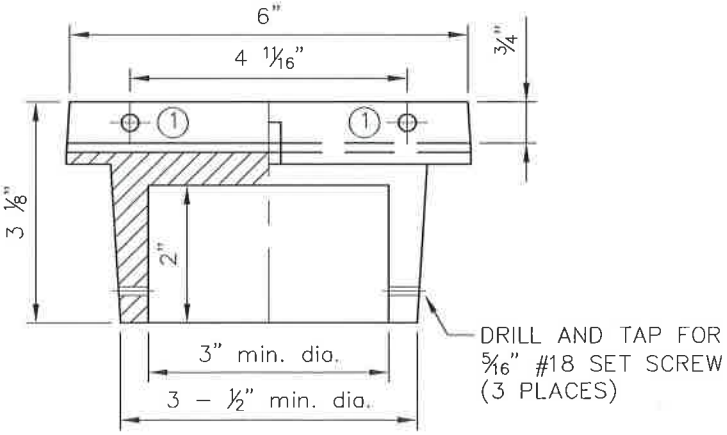

POST CAP HALF-SECTION DETAIL

CURB AND SIDEWALK	SIDEWALK WIDTH	MINIMUM SETBACK
CONTIGUOUS	6' OR LESS	SIDEWALK WIDTH
CONTIGUOUS	MORE THAN 6'	5'
NON CONTIGUOUS	----	5'

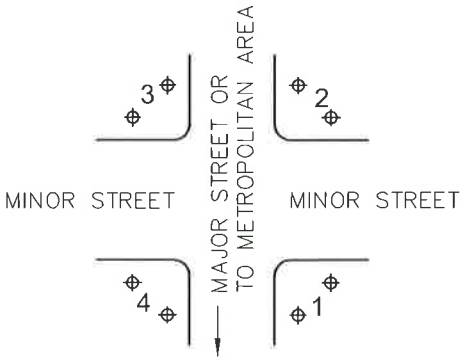

STREET NAME SIGN LOCATION

NUMBER INDICATES PRIORITY OF LOCATION SELECTION

NOTES:

1. DRILL 11/32"ø THROUGH HOLE NEAR SIDE FLANGE (TYP 2 LOCATIONS). DRILL AND TAP FOR 5/16"–#18 BOLTS IN LINE WITH 11/32"ø HOLES.
2. ALL ATTACHING SCREWS SHALL BE VANDAL PROOF TYPE AND GREASED BEFORE INSTALLATION.
3. CONCRETE SHALL BE EITHER GREENBOOK 520–C–2500 OR MINOR CONCRETE PER CALTRANS STANDARD SPECIFICATIONS AS SPECIFIED BY THE ENGINEER.

DRAWN BY: GF	CHECKED BY: KVS	SAN DIEGO COUNTY DESIGN STANDARD	REVISIONS	APPROVED	DATE
RECOMMENDED BY: JEFF S. MOODY, P.E.			REV	JSM	10/2012
APPROVED BY COUNTY ENGINEER DATE: 10/15/12 MOHAMAD FAKHRRIDDINE, P.E. R.C.E. NO. 44520, EXP 3/31/2014		STREET NAME SIGN DETAILS FOR UNSIGNALIZED INTERSECTIONS	DRAWING NUMBER		DS-13C

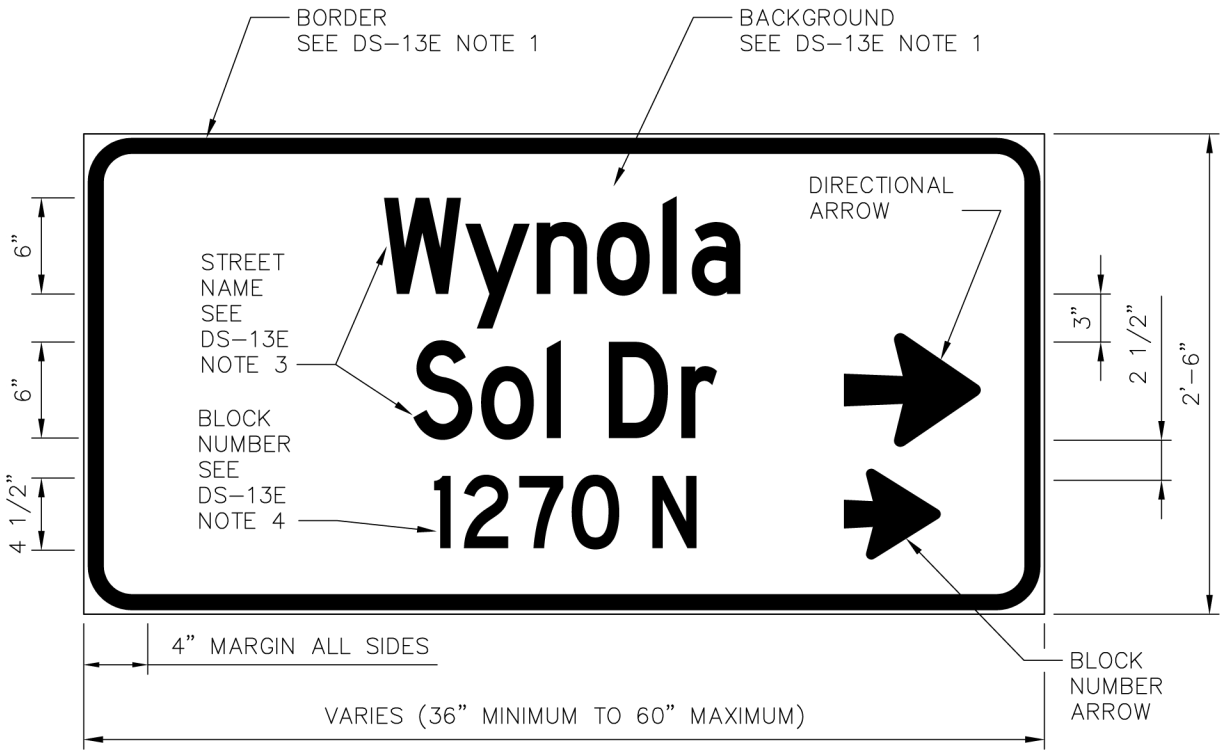

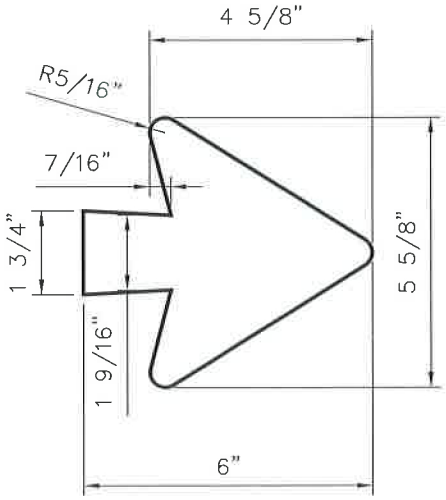

BLOCK NUMBER ARROW DETAIL

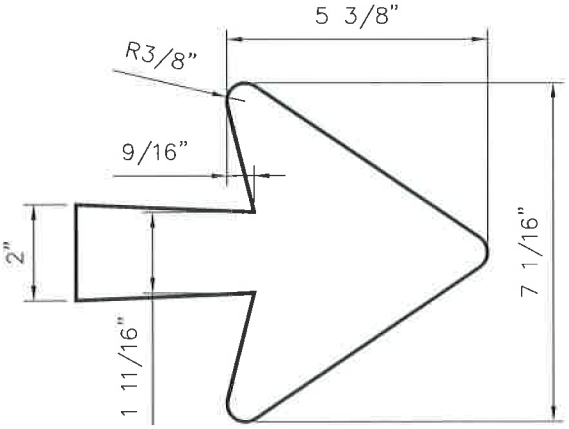

DIRECTIONAL ARROW DETAIL

SEE NOTES ON DS-13E FOR ADDITIONAL SPECIFICATIONS AND REQUIREMENTS

DRAWN BY: GF	CHECKED BY: KVS	SAN DIEGO COUNTY DESIGN STANDARD	REVISIONS	APPROVED	DATE
RECOMMENDED BY: JEFF S. MOODY, P.E.			NEW	JSM	10/2012
APPROVED BY COUNTY ENGINEER		STREET NAME SIGN FOR SIGNALIZED INTERSECTIONS			
DATE: 10/15/12			DRAWING NUMBER	DS-13D	

MOHAMAD FAKHRRIDDINE, P.E.
R.C.E. NO. 44520, EXP 3/31/2014

1. STREET NAME SIGNS AT SIGNALIZED INTERSECTIONS SHALL BE SINGLE FACED SIGNS WITH GREEN BACKGROUND, WHITE LEGEND, AND WHITE, 1" WIDE BORDER. THE STREET NAME SIGN BLANK SHALL BE 0.080" THICK ALUMINUM ALLOY 6063–T6, 6061–T6, 5052–H38, OR APPROVED EQUAL. UNLESS OTHERWISE SPECIFIED, THE SMALLEST POSSIBLE BLANK WHICH MEETS THESE SPECIFICATIONS AND MAINTAINS AESTHETICS SHALL BE USED FOR EACH STREET NAME SIGN. THE BLANK SHALL BE COMPLETELY COVERED WITH EITHER WHITE ASTM D4956 TYPE IX SIGN SHEETING (3M DIAMOND GRADE VIP WHITE 3990 OR APPROVED EQUAL) OR TYPE XI SIGN SHEETING (3M DIAMOND GRADE DG3 WHITE 4090 OR APPROVED EQUAL). THEN, A SINGLE SHEET OF 3M ELECTRONIC CUTTABLE TRANSPARENT FILM GREEN 1177 (OR APPROVED EQUAL) WITH THE DESIGNATED STREET NAME SIGN INFORMATION CUT OUT SHALL BE APPLIED TO THE SIGN FACE. THE 1" WIDE BORDER SHALL HAVE ROUNDED CORNERS (3" OUTSIDE RADIUS TYPICAL). LASTLY, THE SIGN FACE SHALL BE COVERED WITH PREMIUM CLEAR PROTECTIVE OVERLAY FILM (3M 1160 OR EQUIVALENT). ALL SHEETING AND FILMS USED ON EACH STREET NAME SIGN SHALL BE COMPATIBLE TO ENSURE MATERIAL WARRANTIES ARE EFFECTIVE.

2. THE DIRECTIONAL ARROW SHALL BE USED AT INTERSECTIONS THAT HAVE STREET NAME CHANGES, AND SHALL INDICATE WHICH LEG OF THE INTERSECTION HAS THE RESPECTIVE STREET NAME. THE DIRECTIONAL ARROW IS DISPLAYED IN WHITE ON THE BLADE. THE DIRECTIONAL ARROW IS CENTERED VERTICALLY WITH RESPECT TO THE ASSOCIATED LINE OF TEXT. THE COMPASS DIRECTION OF THE DIRECTIONAL ARROW FOR EACH STREET NAME SIGN BLADE SHALL BE SPECIFIED WHEN ORDERED.

3. THE STREET NAME IS DISPLAYED IN WHITE ON THE STREET NAME SIGN. ONLY THE OFFICIAL COUNTY RECORDED NAME AND SPELLING SHALL BE USED ON THE STREET NAME SIGN. ONLY COUNTY APPROVED ABBREVIATIONS PER DS–13G SHALL BE USED ON THE STREET NAME SIGNS. THE STREET NAME SIGN LETTERING SHALL BE 6" UPPERCASE AND 4.5" LOWERCASE HIGHWAY GOTHIC FONT, WITH STYLE AND SPACING AS ESTABLISHED IN THE CALIFORNIA MANUAL ON UNIFORM TRAFFIC DEVICES (CAMUTCD), CURRENT EDITION. STROKE WIDTH AND LETTER WIDTH USED FOR THE WHOLE STREET NAME MAY VARY FROM SERIES B TO SERIES E (REFER TO FHWA STANDARD SIGNS AND MARKINGS SIGN FONTS AT HTTP://MUTCD.FHWA.DOT.GOV/SHSE/ALPHABETS.PDF). THE MINIMUM GAP DISTANCE BETWEEN THE DIRECTIONAL ARROW AND THE STREET NAME SHALL EQUAL THE SPACING USED FOR THE BLANK SPACES IN THE STREET NAME. THE FIRST LINE OF TEXT ON THE SIGN SHALL ONLY CONTAIN THE NAME OF THE STREET. IF THE STREET NAME IS MADE OF PARTS, SOME OF THE PARTS OF THE NAME MAY BE PUT ON THE SECOND LINE OF TEXT TO MINIMIZE THE LENGTH OF THE SIGN. THE STREET NAME SUFFIX (St, Bl, Rd, Av, Dr, Ln, Wy) SHALL BE PLACED ON THE SECOND LINE OF TEXT. BOTH LINES OF TEXT ARE TO BE CENTERED HORIZONTALLY ON THE SIGN.

4. THE BLOCK NUMBER IS DISPLAYED IN WHITE ON THE STREET NAME SIGN. THE BLOCK NUMBER LETTERING SHALL BE 4.5" HIGH HIGHWAY GOTHIC FONT, WITH STYLE AND SPACING PER CAMUTCD, CURRENT EDITION. THE SERIES USED FOR THE WHOLE BLOCK NUMBER SHALL BE THE SAME SERIES THAT IS USED FOR THE STREET NAME. THE BLOCK NUMBER SHALL BE CENTERED HORIZONTALLY ON THE STREET NAME SIGN.

5. IF THE BLOCK NUMBER INCREASES TO THE LEFT OF THE SIGN, THEN USE A LEFT BLOCK NUMBER ARROW ON THE LEFT SIDE OF THE BLOCK NUMBER. BLOCK NUMBER AND THE BLOCK NUMBER ARROW SHALL BE SEPARATED BY 4". THE COMPASS DIRECTION OF THE BLOCK NUMBER ARROW FOR EACH STREET NAME SIGN SHALL BE SPECIFIED WHEN ORDERED.

6. SIGNS SHALL BE MOUNTED ON TRAFFIC SIGNAL POLES PER DS–13F.

DRAWN BY: GF	CHECKED BY: KVS	SAN DIEGO COUNTY DESIGN STANDARD	REVISIONS	APPROVED	DATE
RECOMMENDED BY: JEFF S. MOODY, P.E.			NEW	JSM	10/2012
APPROVED BY COUNTY ENGINEER DATE: 10/15/12 MOHAMAD FAKHRRIDDINE, P.E. R.C.E. NO. 44520, EXP 3/31/2014		STREET NAME SIGN NOTES FOR SIGNALIZED INTERSECTIONS			
			DRAWING NUMBER	DS-13E	

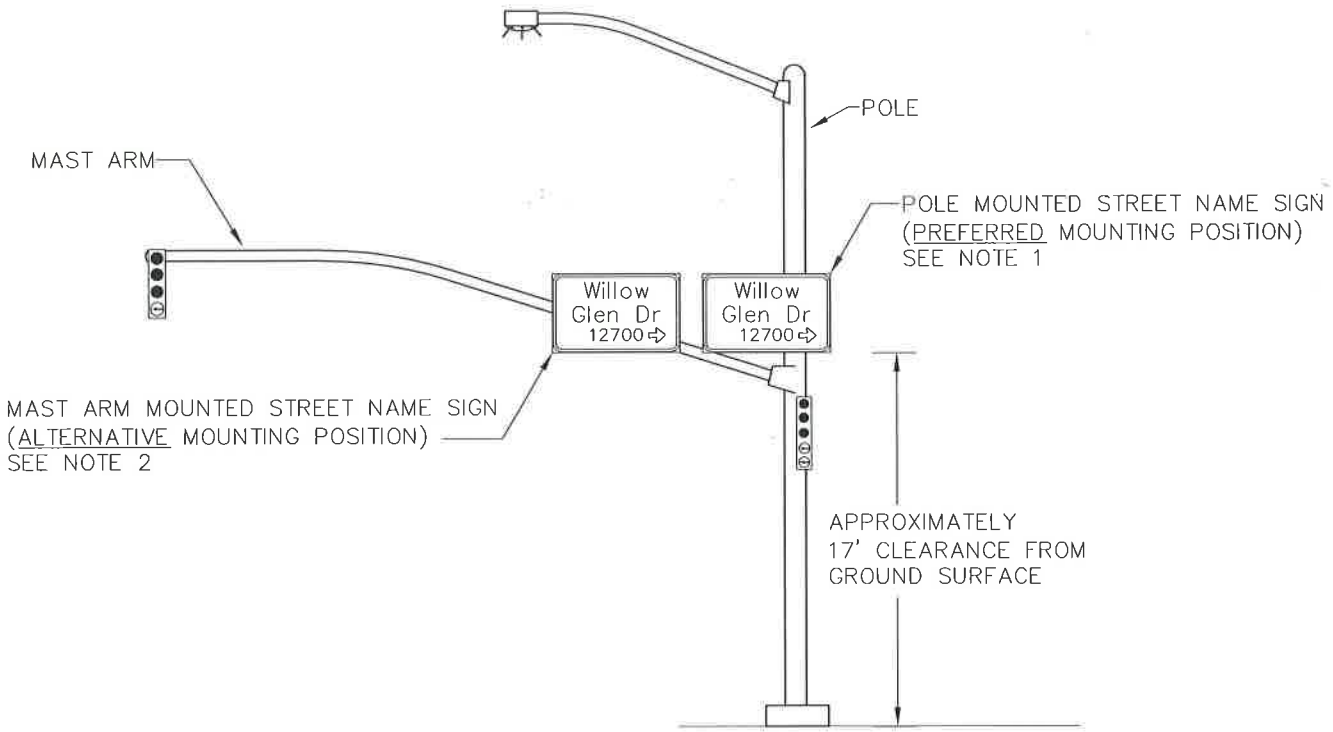

TYPICAL ELEVATION

NOTES:

1. THE NEW STREET NAME SIGN SHALL BE MOUNTED ON THE POLE APPROXIMATELY 17 FEET ABOVE THE GROUND SURFACE (ABOVE THE POLE MOUNTED SIGNAL HEAD AND IF POSSIBLE ABOVE THE MAST ARM). THE MOUNTING ASSEMBLY SHALL BE AN ASTRO SIGN-BRAC BAND MOUNT ASSEMBLY OR APPROVED EQUAL. ONE MOUNTING BRACKET ASSEMBLY SHALL BE USED PER 16 SQUARE FEET OF SIGN AREA. SIGNS SHALL BE MOUNTED WITH A 5-DEGREE TILT FROM VERTICAL TOWARD ONCOMING TRAFFIC FOR EASY READING. SIGNS SHALL BE MOUNTED SO THAT THE SIGN TEXT IS LEVEL. SITE PLANS SHALL SHOW THE APPROXIMATE ORIENTATIONS OF INDIVIDUAL SIGNS.

2. IF THE NEW STREET NAME SIGN CANNOT BE MOUNTED ON THE POLE AS DESCRIBED ABOVE, THE SIGN SHALL BE MOUNTED ON THE MAST ARM NEXT TO THE POLE. AN ASTRO SIGN-BRAC BAND MOUNT ASSEMBLY OR APPROVED EQUAL SHALL BE USED TO MOUNT THE NEW STREET NAME SIGN ONTO THE TRAFFIC SIGNAL MAST ARM. ONE MOUNTING BRACKET ASSEMBLY SHALL BE USED PER 16 SQUARE FEET OF SIGN AREA. SIGNS SHALL BE MOUNTED WITH A 5-DEGREE TILT FROM VERTICAL TOWARD ONCOMING TRAFFIC FOR EASY READING. SIGNS SHALL BE MOUNTED SO THAT THE SIGN TEXT IS LEVEL. SITE PLANS SHALL SHOW THE APPROXIMATE ORIENTATIONS OF INDIVIDUAL SIGNS.

DRAWN BY: GF	CHECKED BY: KVS	SAN DIEGO COUNTY DESIGN STANDARD	REVISIONS	APPROVED	DATE
RECOMMENDED BY: JEFF S. MOODY, P.E.			NEW	JSM	10/2012
APPROVED BY COUNTY ENGINEER DATE: 10/15/12 MOHAMAD FAKHRRIDDINE, P.E. R.C.E. NO. 44520, EXP 3/31/2014		SIGN MOUNTING DETAIL FOR SIGNALIZED INTERSECTIONS			
			DRAWING NUMBER	DS-13F	

NAME TO BE ABBREVIATED	ABBREVIATION	NAME TO ABBREVIATED	ABBREVIATION
Avenida	Avd	Place	Pl
Avenue	Av	Plaza	Plz
Boulevard	Bl	Rambla	Rmbla
Calle	Cl	Ranch	Rch
Callejon	Clj	Rancho	Rcho
Caminito	Cmto	Ridge	Rdg
Camino	Cam	River	Riv
Center	Ctr	Road	Rd
Circle	Cir	Saint – used at the beginning of a name	St
Corte	Cte		
Court	Ct	Santa	Snta
Creek	Ck	South	S
Drive	Dr	Spring	Spg
East	E	Springs	Spgs
Estate	Est	Station	Sta
Freeway	Fwy	Street – used at the end of a name	St
Gardens	Gdns		
Heights	Hts	Summit	Smt
Highlands	Hghlds	Terrace	Ter
Highway	Hwy	Trail	Tr
Lake	Lk	Truck Trail	TT
Lane	Ln	Valley	Vly
Loop	Lp	View	Vw
Meadow	Mdw	Village	Vlg
Mount	Mt	Vista	Vis
Mountain	Mtn	Way	Wy
North	N	West	W
Park	Pk		
Parkway	Pkwy		
Paseo	Pas		

DRAWN BY: GF CHECKED BY: KVS

RECOMMENDED BY: JEFF S. MOODY, P.E.

APPROVED BY COUNTY ENGINEER

DATE: 10/15/12

MOHAMAD FAKHRIDDINE, P.E.
R.C.E. NO. 44520, EXP 3/31/2014

SAN DIEGO COUNTY DESIGN STANDARD

ABBREVIATIONS FOR STREET NAME SIGNS

REVISIONS	APPROVED	DATE
NEW	JSM	10/2012

DRAWING NUMBER DS-13G

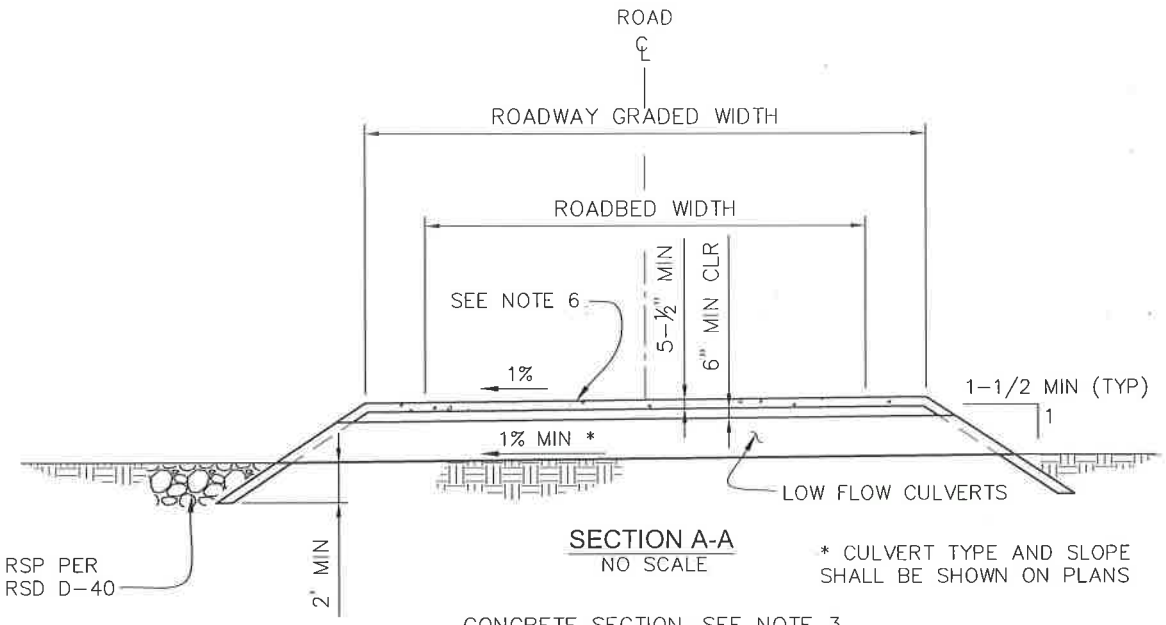

SECTION A-A
NO SCALE

* CULVERT TYPE AND SLOPE SHALL BE SHOWN ON PLANS

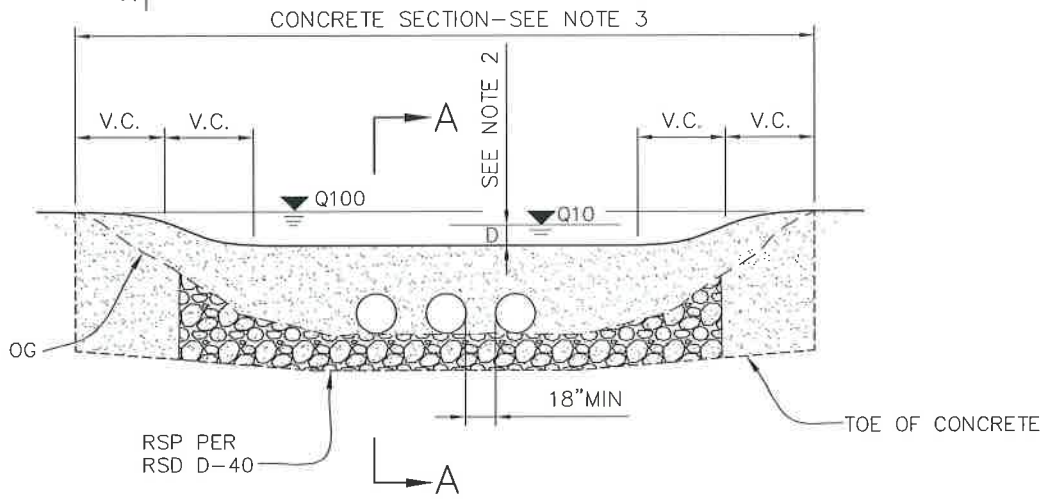

PROFILE
NO SCALE

NOTES:

1. DIP SECTIONS SHALL CONFORM TO SECTION 5.11, "DRAINAGE IMPROVEMENTS" OF THE COUNTY OF SAN DIEGO PUBLIC ROAD STANDARDS.
2. THE MAXIMUM WATER DEPTH FOR A Q10 FREQUENCY STORM (D), SHALL NOT EXCEED 10" AND THE DEPTH (D) IN FEET MULTIPLIED BY THE VELOCITY (V) IN FEET PER SECOND SHALL NOT EXCEED 6.
3. PORTLAND CEMENT CONCRETE SHALL EXTEND AT LEAST TO THE LIMITS OF THE Q100 FLOODWAY.
4. VERTICAL CURVES (V.C.) SHALL BE DESIGNED IN ACCORDANCE WITH AASHTO POLICY ON GEOMETRIC DESIGN OF HIGHWAYS AND STREETS.
5. LOW FLOW CULVERTS (18" MINIMUM DIAMETER) MAY BE OMITTED IF THE CONDITIONS OF NOTES 2 AND 3 CAN BE SATISFIED WITHOUT THEIR USE.
6. PORTLAND CEMENT CONCRETE SHALL CONFORM TO EITHER GREENBOOK 560-C-3250 OR CALTRANS MINOR CONCRETE. REINFORCING STEEL SHALL CONSIST OF A MINIMUM 6" X 6" X 10 GA WWF.

DRAWN BY: PBM	CHECKED BY: JSM	SAN DIEGO COUNTY DESIGN STANDARD	REVISIONS	APPROVED	DATE
RECOMMENDED BY: JEFF S. MOODY, P.E.			REV	JSM	10/2012
APPROVED BY COUNTY ENGINEER DATE: 10/15/12 MOHAMAD FAKHRRIDDINE, P.E. R.C.E. NO. 44520, EXP 3/31/2014		DIP SECTION (PRIVATE ROAD)	DRAWING NUMBER	DS-14	

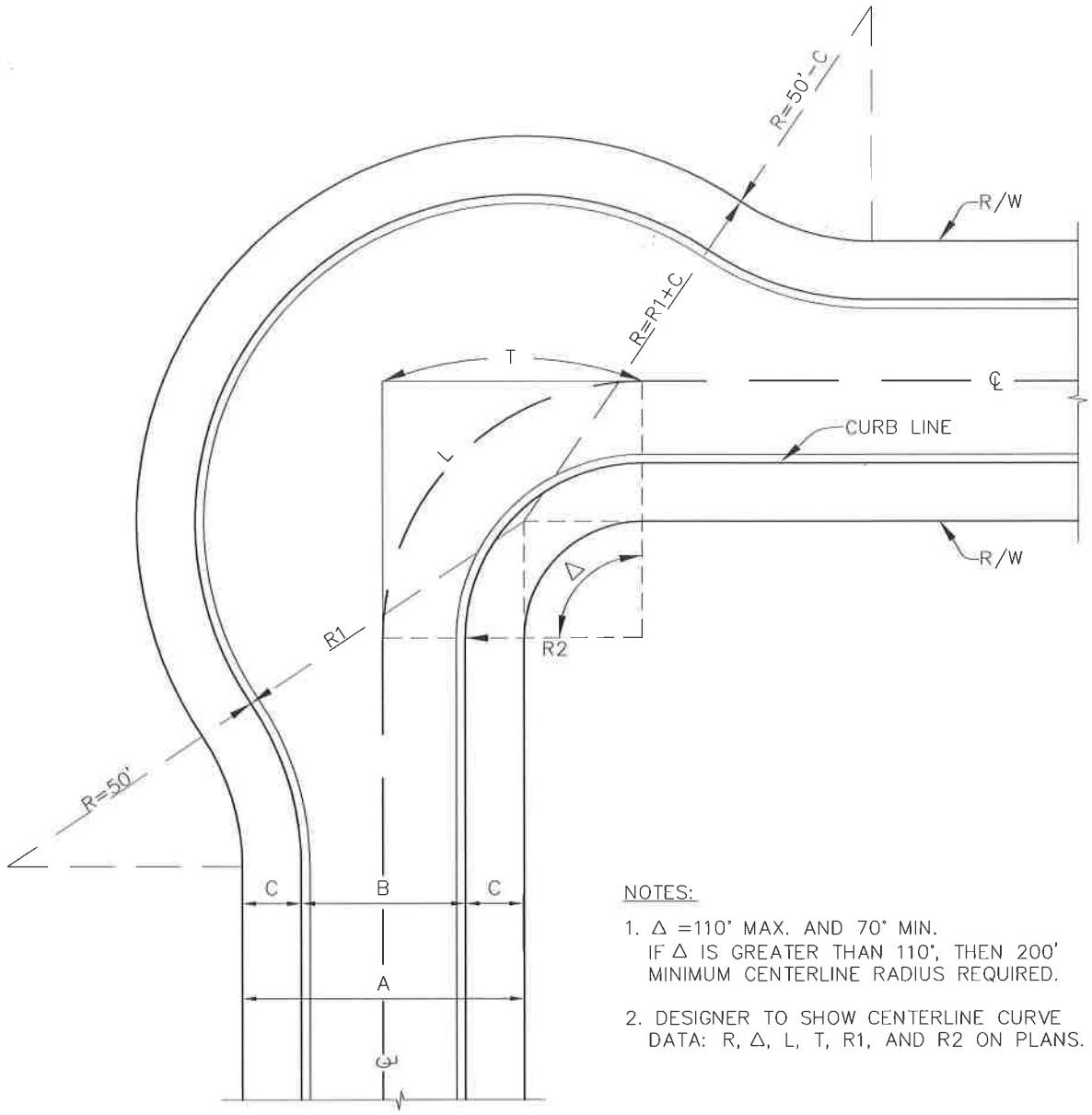

PLAN
NO SCALE

NOTES:

1. Δ =110° MAX. AND 70° MIN.
   IF Δ IS GREATER THAN 110°, THEN 200' MINIMUM CENTERLINE RADIUS REQUIRED.

2. DESIGNER TO SHOW CENTERLINE CURVE DATA: R, Δ, L, T, R1, AND R2 ON PLANS.

A (R/W)	B	R1*	R2*	C*
72'	52'	80'	40'	10'
60'	40'	68'	30'	10'
56'	36'	64'	30'	10'
52'	32'	60'	30'	10'
48'	28'	56'	30'	10'

* DIMENSIONS SHOWN ARE MINIMUMS

DRAWN BY: PBM	CHECKED BY: JSM	SAN DIEGO COUNTY DESIGN STANDARD	REVISIONS	APPROVED	DATE
RECOMMENDED BY: JEFF S. MOODY, P.E.			REV	JSM	10/2012
APPROVED BY COUNTY ENGINEER DATE: 10/15/12 MOHAMAD FAKHRRIDDINE, P.E. R.C.E. NO. 44520, EXP 3/31/2014		STREET KNUCKLE	DRAWING NUMBER	DS-15	

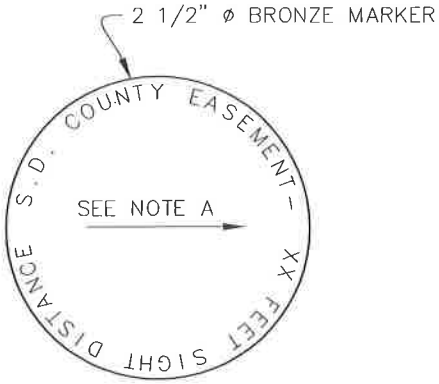

BRONZE MARKER

NO SCALE

NOTE A

ROTATE ARROW TO INDICATE LOCATION OF TARGET POINT. SHOW SIGHT DISTANCE (XX) IN FEET

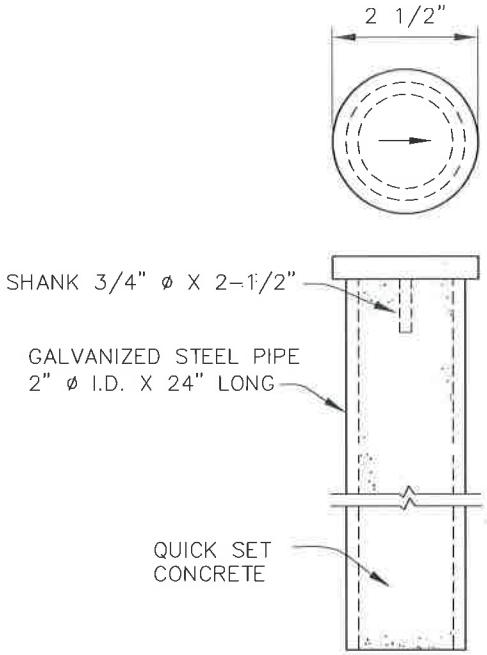

TYPE 2 MARKER

NO SCALE

NO SCALE

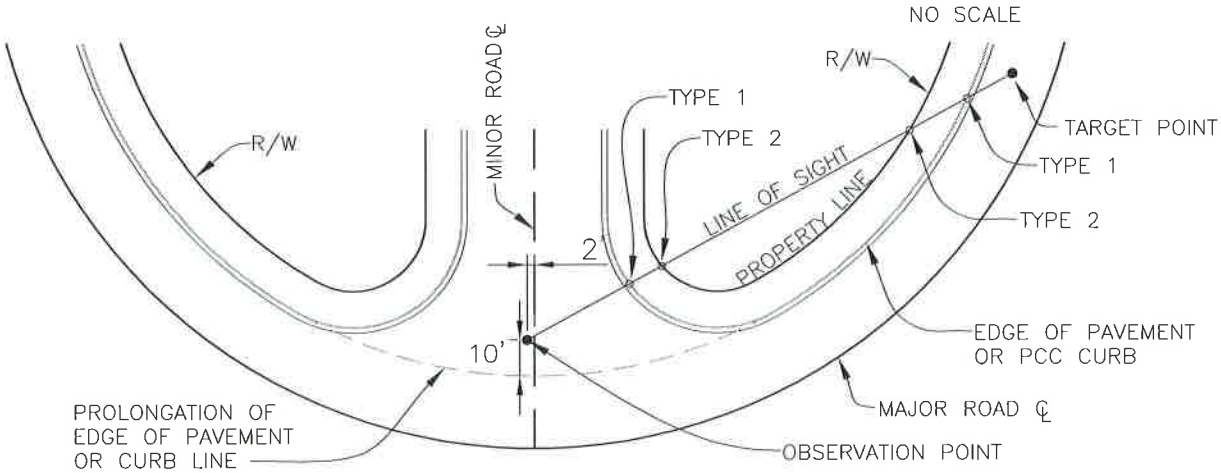

INTERSECTION DETAIL

NO SCALE

NOTES:

TYPE 1: BRONZE MARKER TO BE SET IN PCC CURB WHERE LINE-OF-SIGHT INTERSECTS CURB.

TYPE 2: IF NO PCC CURB, SET BRONZE MARKER IN CONCRETE IN 2" ø X 24" LONG GALVANIZED STEEL PIPE AT THE INTERSECTION OF THE LINE-OF-SIGHT AND PROPERTY LINE.

CLEAR SPACE EASEMENTS FOR SIGHT DISTANCE, WHERE SPECIFIED ON PLANS, SHALL BE DESIGNATED BY A BRONZE MARKER ACCORDING TO EITHER TYPE 1 OR TYPE 2 ABOVE.

DRAWN BY: PBM	CHECKED BY: JSM	SAN DIEGO COUNTY DESIGN STANDARD	REVISIONS	APPROVED	DATE
RECOMMENDED BY: JEFF S. MOODY, P.E.			REV	JSM	10/2012
APPROVED BY COUNTY ENGINEER DATE: 10/15/12 MOHAMAD FAKHRRIDDINE, P.E. R.C.E. NO. 44520, EXP 3/31/2014		CLEAR SPACE EASEMENT MARKERS			
			DRAWING NUMBER	DS-16	

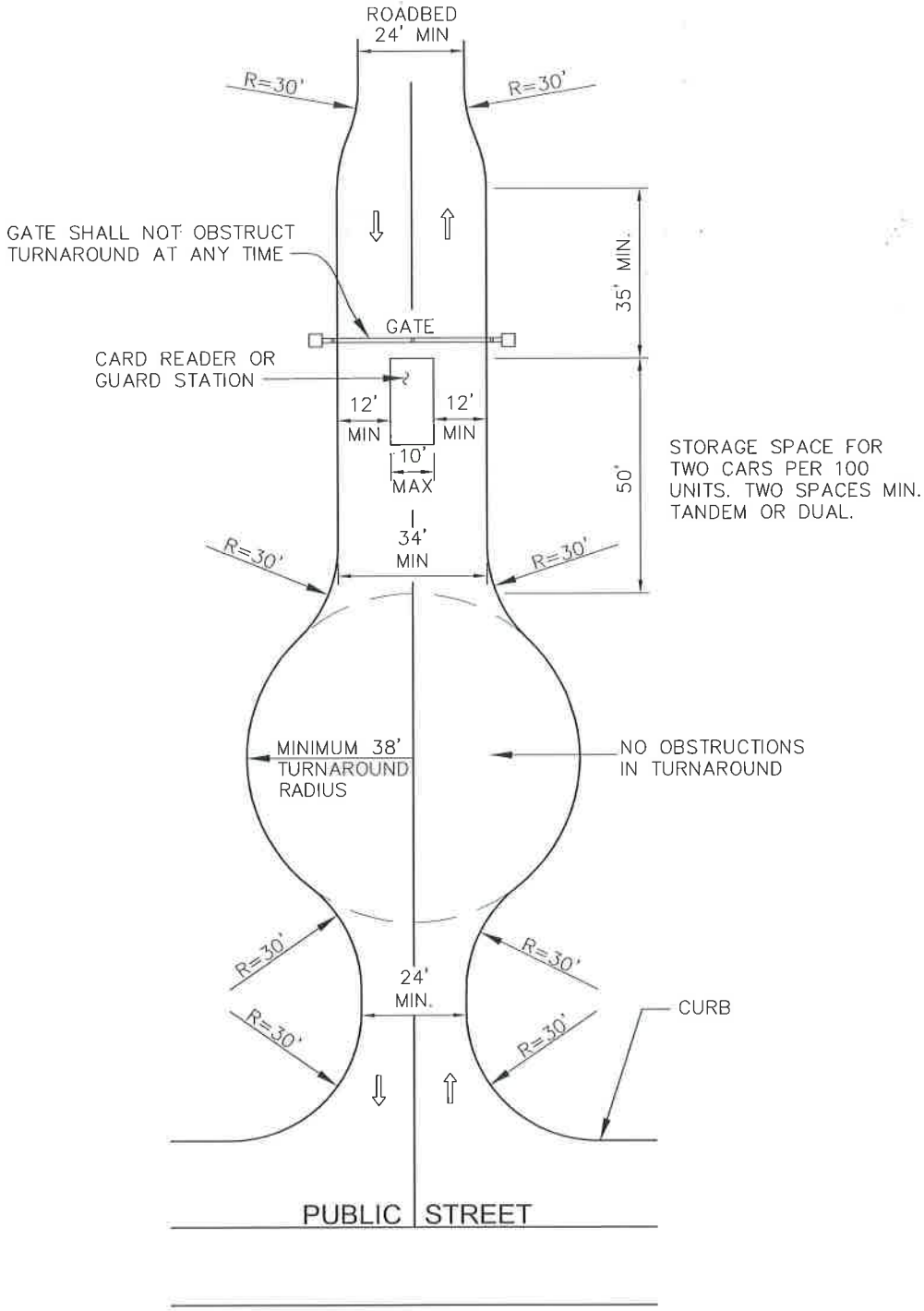

GATED DRIVEWAY ENTRANCE

NO SCALE

DRAWN BY: PBM	CHECKED BY: JSM	SAN DIEGO COUNTY DESIGN STANDARD	REVISIONS	APPROVED	DATE
RECOMMENDED BY: JEFF S. MOODY, P.E.			REV	JSM	10/2012
APPROVED BY COUNTY ENGINEER DATE: 10/15/12 MOHAMAD FAKHRRIDDINE, P.E. R.C.E. NO. 44520, EXP 3/31/2014		GATED DRIVEWAY ENTRANCE TYPE I	DRAWING NUMBER	DS-17	

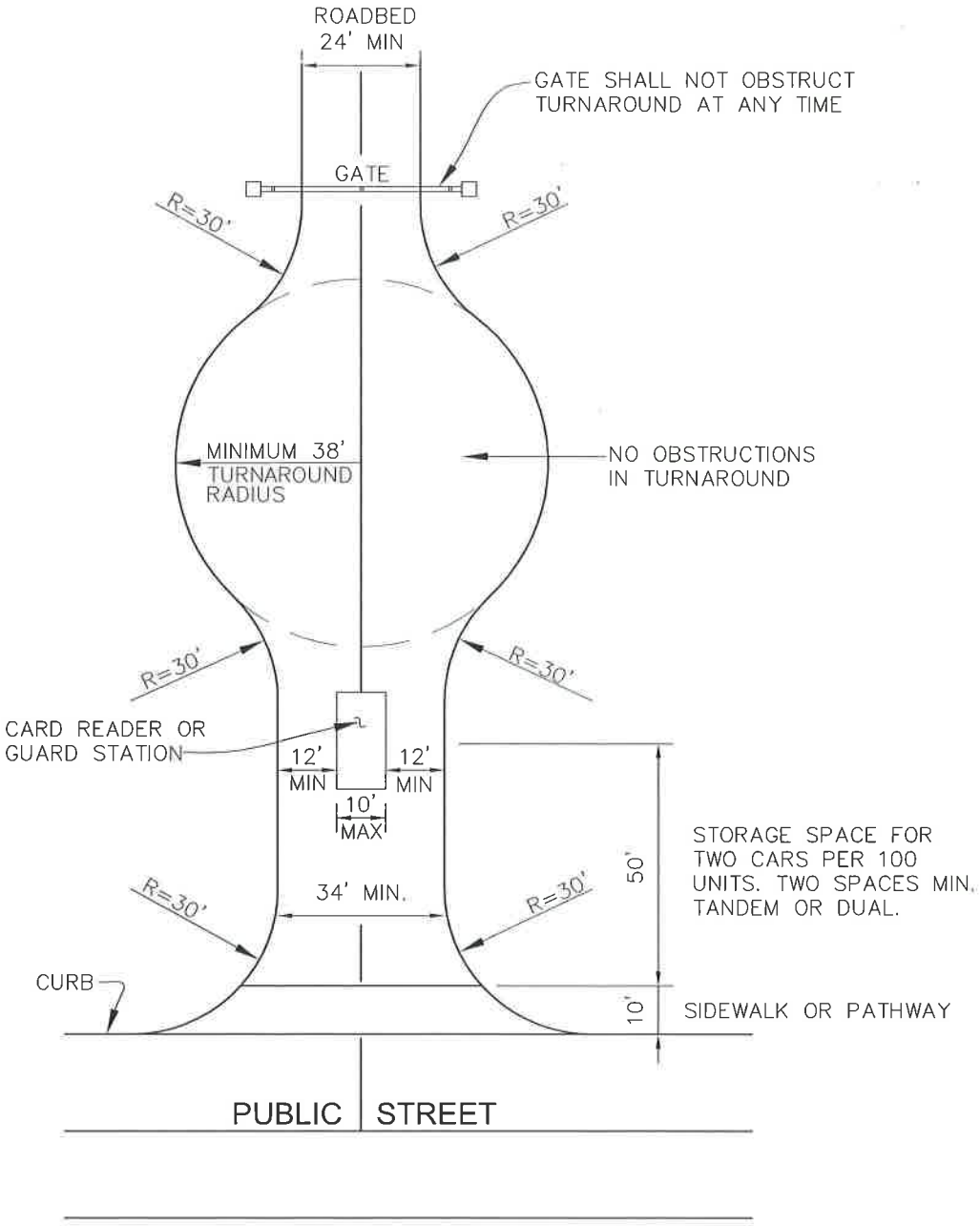

GATED DRIVEWAY ENTRANCE

NO SCALE

DRAWN BY: PBM	CHECKED BY: JSM	SAN DIEGO COUNTY DESIGN STANDARD	REVISIONS	APPROVED	DATE
RECOMMENDED BY: JEFF S. MOODY, P.E.			REV	JSM	10/2012
APPROVED BY COUNTY ENGINEER DATE: 10/15/12 MOHAMAD FAKHRRIDDINE, P.E. R.C.E. NO. 44520, EXP 3/31/2014		GATED DRIVEWAY ENTRANCE TYPE II	DRAWING NUMBER	DS-18	

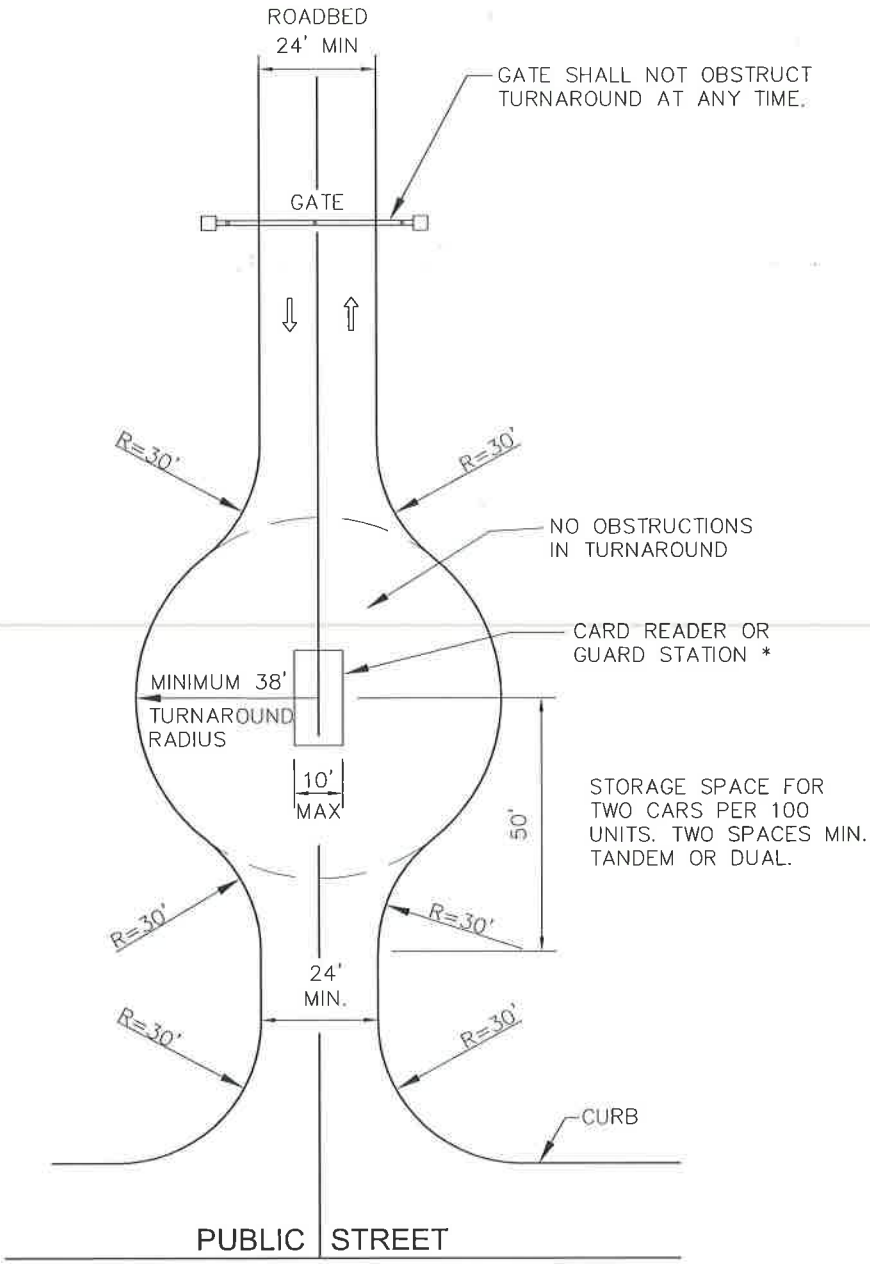

GATED DRIVEWAY ENTRANCE

NO SCALE

* CARD READER OR GUARD STATION MUST PROVIDE SUFFICIENT ROOM FOR AN EMERGENCY VEHICLE TO TURN AROUND.

DRAWN BY: PBM	CHECKED BY: JSM	SAN DIEGO COUNTY DESIGN STANDARD	REVISIONS	APPROVED	DATE
RECOMMENDED BY: JEFF S. MOODY, P.E.			REV	JSM	10/2012
APPROVED BY COUNTY ENGINEER DATE: 10/15/12 MOHAMAD FAKHRRIDDINE, P.E. R.C.E. NO. 44520, EXP 3/31/2014		GATED DRIVEWAY ENTRANCE TYPE III	DRAWING NUMBER	DS-19

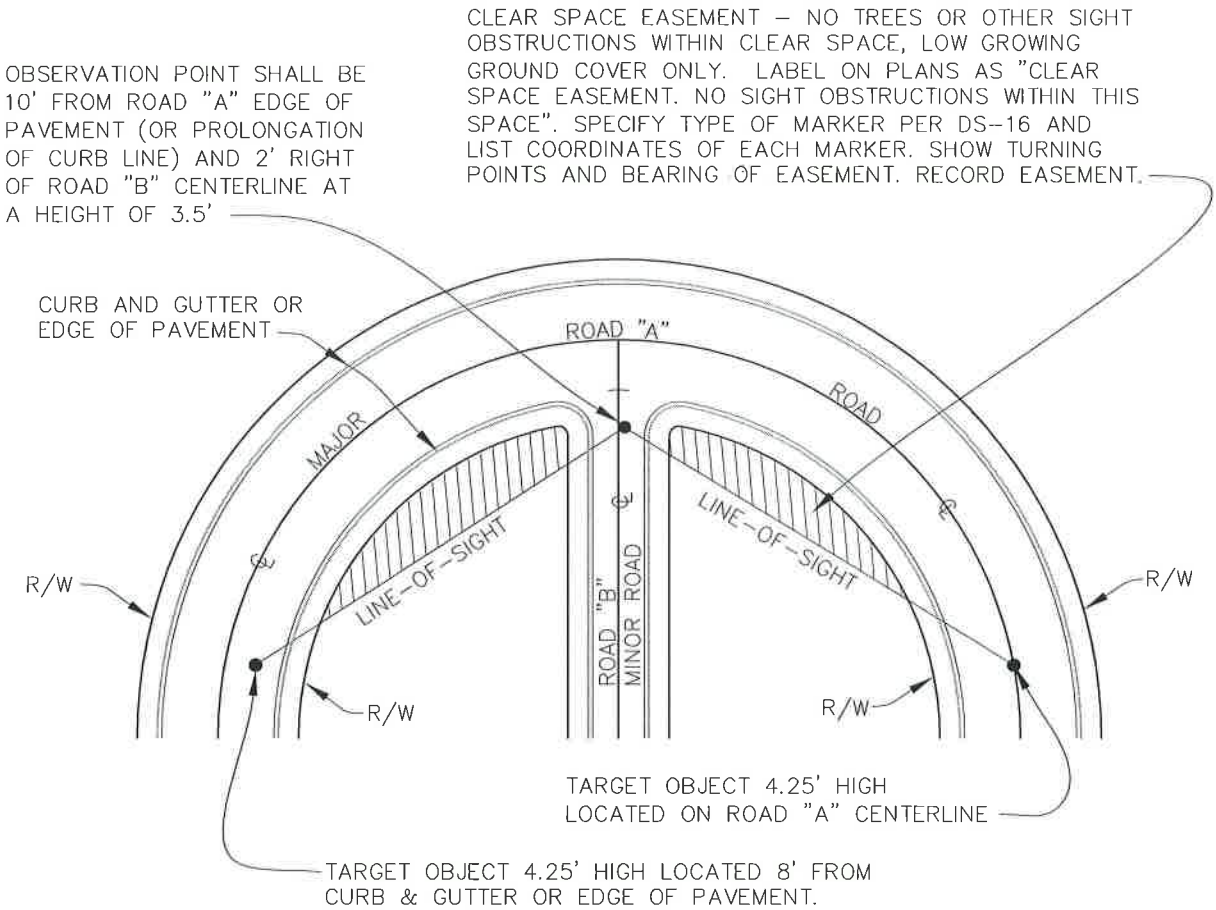

INTERSECTION SIGHT DISTANCE

NO SCALE

PER COUNTY OF SAN DIEGO PUBLIC ROAD STANDARDS THE REQUIRED MINIMUM INTERSECTION SIGHT DISTANCE SHALL BE TEN TIMES THE DESIGN SPEED OF THE MAJOR ROAD (ROAD "A" DESIGN SPEED (MPH) X 10FT/MPH). INTERSECTION SIGHT DISTANCE IS MEASURED FROM AN OBSERVATION POINT 2 FEET RIGHT OF ROAD "B" CENTERLINE AND 10 FEET BACK FROM ROAD "A" EDGE OF PAVEMENT (OR PROLONGATION OF CURB LINE) AND MEASURED FROM A HEIGHT OF 3.5 FEET TO AN OBJECT HEIGHT OF 4.25 FEET.

NOTE THE REQUIRED SIGHT DISTANCE APPLIES TO BOTH HORIZONTAL AND VERTICAL OBSTRUCTIONS.

DRAWN BY: PBM	CHECKED BY: JSM	SAN DIEGO COUNTY DESIGN STANDARD	REVISIONS	APPROVED	DATE
RECOMMENDED BY: JEFF S. MOODY, P.E.			REV	JSM	10/2012
APPROVED BY COUNTY ENGINEER		CLEAR SPACE EASEMENT TYPE A			
MOHAMAD FAKHRRIDDINE, P.E. R.C.E. NO. 44520, EXP 3/31/2014	DATE: 10/5/12		DRAWING NUMBER	DS-20A	

CLEAR SPACE EASEMENTS– NO TREES OR OTHER SIGHT OBSTRUCTIONS WITHIN CLEAR SPACE, LOW GROWING GROUND COVER ONLY. LABEL ON PLANS AS "CLEAR SPACE EASEMENT. NO SIGHT OBSTRUCTIONS WITHIN THIS SPACE." SPECIFY TYPE OF MARKER PER DS–16 AND LIST COORDINATES OF EACH MARKER. SHOW TURNING POINT AND BEARING OF EASEMENT. RECORD EASEMENT

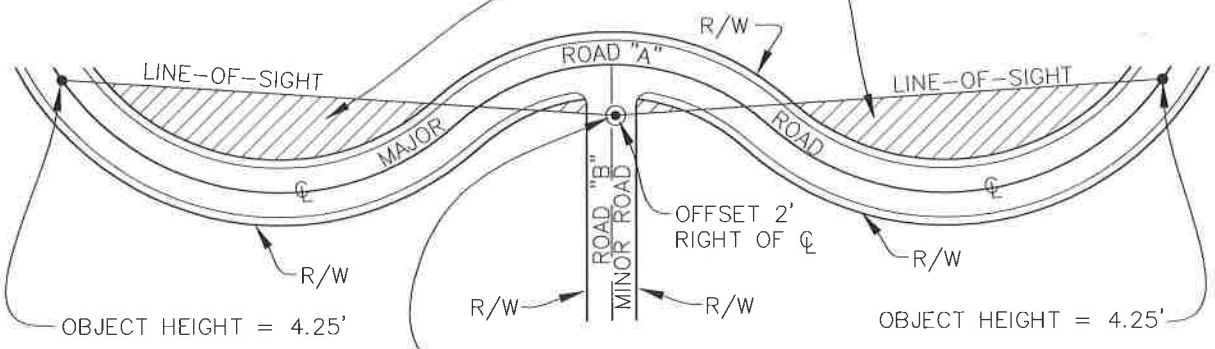

CLEAR SPACE EASEMENT AREA

INTERSECTION SIGHT DISTANCE

NO SCALE

PER COUNTY PUBLIC ROAD STANDARDS THE REQUIRED MINIMUM INTERSECTION SIGHT DISTANCE SHALL BE TEN TIMES THE DESIGN SPEED OF THE MAJOR ROAD (ROAD "A" DESIGN SPEED (MPH) X 10FT/MPH). INTERSECTION SIGHT DISTANCE IS MEASURED FROM AN OBSERVATION POINT 2 FEET RIGHT OF ROAD "B" CENTERLINE AND 10 FEET BACK FROM ROAD "A" EDGE OF PAVEMENT (OR PROLONGATION OF THE CURB LINE) AND MEASURED FROM A HEIGHT OF 3.5 FEET TO AN OBJECT HEIGHT OF 4.25 FEET.

NOTE THE REQUIRED SIGHT DISTANCE APPLIES TO BOTH HORIZONTAL AND VERTICAL OBSTRUCTIONS

DRAWN BY: PBM	CHECKED BY: JSM	SAN DIEGO COUNTY DESIGN STANDARD	REVISIONS	APPROVED	DATE
RECOMMENDED BY: JEFF S. MOODY, P.E.			REV	JSM	10/2012
APPROVED BY COUNTY ENGINEER DATE: 10/15/12 MOHAMAD FAKHRRIDDINE, P.E. R.C.E. NO. 44520, EXP 3/31/2014		CLEAR SPACE EASEMENT TYPE B			
			DRAWING NUMBER	DS-20B	

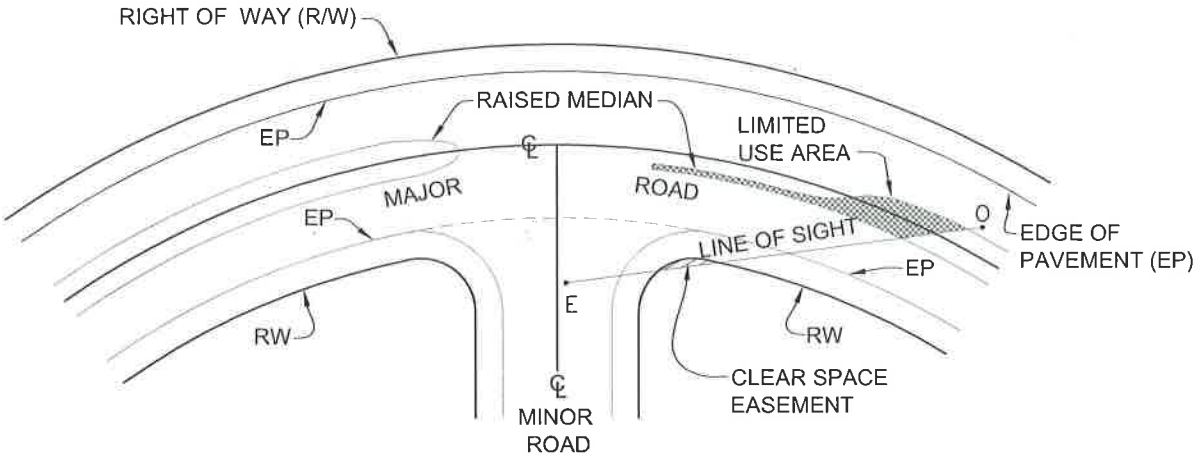

LIMITED USE AREA. NO SIGHT OBSTRUCTIONS OR VEGETATION WITHIN THIS AREA.

CLEAR SPACE EASEMENT. NO SIGHT OBSTRUCTIONS WITHIN THIS AREA.
REFER TO DS-16 , DS-20A AND DS-20B OF THESE DESIGN STANDARDS.

E = OBSERVATION POINT OF MOTORIST ON MINOR ROAD. THE OBSERVATION POINT IS LOCATED 10 FEET BACK FROM THE PROLONGATION OF THE EDGE OF PAVEMENT OR CURB LINE OF THE MAJOR ROAD AND 2 FEET RIGHT OF THE MINOR ROAD CENTERLINE. SIGHT DISTANCE IS MEASURED FROM AN EYE HEIGHT OF 3.5 FEET ABOVE THE ROAD SURFACE AT THE OBSERVATION POINT.

O = LOCATION OF THE OBJECT VEHICLE ON THE MAJOR ROAD. THE OBJECT VEHICLE HEIGHT IS 4.25 FEET ABOVE THE ROAD SURFACE AND THE VEHICLE LOCATION IS THE MOST CRITICAL OF EITHER 2 FEET FROM THE MEDIAN OR 8 FEET FROM THE RIGHT EDGE OF TRAVELED WAY DEPENDING ON THE NUMBER OF LANES AND ROAD ALIGNMENT.

LINE OF SIGHT= LINE ALONG WHICH SIGHT DISTANCE IS MEASURED. THE REQUIRED MINIMUM SIGHT DISTANCE IS SPECIFIED IN THE COUNTY OF SAN DIEGO PUBLIC ROAD STANDARDS. ALSO REFER TO DETAILS DS-20A AND DS-20B OF THESE DESIGN STANDARDS.

CLEAR SPACE EASEMENT = AREA OUTSIDE THE ROAD RIGHT OF WAY REQUIRING RESTRICTIONS ON SIGHT DISTANCE OBSTRUCTIONS. CLEAR SPACE EASEMENTS SHALL BE MONUMENTED AND RECORDED IN ACCORDANCE WITH DETAILS DS-16, DS-20A AND DS-20B OF THESE DESIGN STANDARDS.

LIMITED USE AREA = AREA WITHIN RAISED MEDIANS WHERE SIGHT OBSTRUCTIONS AND VEGETATION ARE PROHIBITED.

NOTE: ALL LIMITED USE AREAS SHALL BE NOTED ON THE ROAD IMPROVEMENT AND LANDSCAPING PLANS WITH CONSPICUOUS TEXT STATING NO SIGHT OBSTRUCTIONS OR VEGETATION IN THIS AREA.

DRAWN BY: KVS	CHECKED BY: MLK	SAN DIEGO COUNTY DESIGN STANDARD	REVISIONS	APPROVED	DATE
RECOMMENDED BY: JEFF S. MOODY, P.E.			NEW	MLK	10/2012
APPROVED BY COUNTY ENGINEER DATE: 10/23/12 MOHAMAD FAKHRRIDDINE, P.E. R.C.E. NO. 44520, EXP 3/31/2014		LIMITED USE AREA TYPE A			
			DRAWING NUMBER	DS-20C	

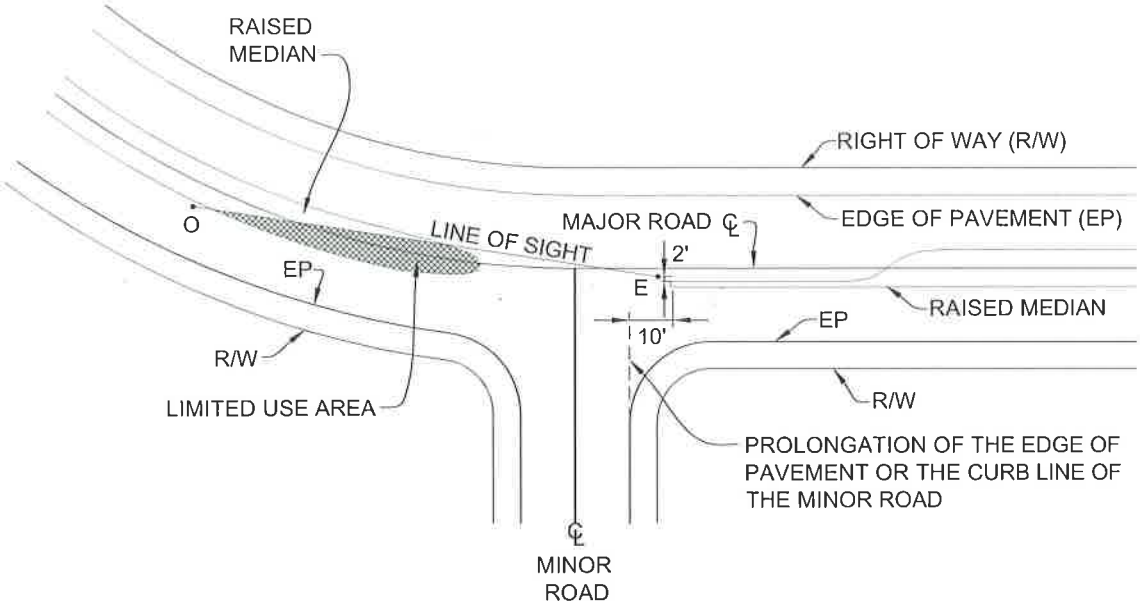

LIMITED USE AREA. NO SIGHT OBSTRUCTIONS OR VEGETATION WITHIN THIS AREA.

E = OBSERVATION POINT OF MOTORIST ON THE MAJOR ROAD TURNING LEFT. THE OBSERVATION POINT IS LOCATED 10 FEET BACK FROM THE PROLONGATION OF THE EDGE OF PAVEMENT OR CURB LINE OF THE MINOR ROAD AND 2 FEET RIGHT OF THE MAJOR ROAD MEDIAN OR STRIPED CENTERLINE. SIGHT DISTANCE IS MEASURED FROM AN EYE HEIGHT OF 3.5 FEET ABOVE THE ROAD SURFACE AT THE OBSERVATION POINT.

O = LOCATION OF THE OBJECT VEHICLE APPROACHING THE INTERSECTION ON THE MAJOR ROAD. THE APPROACHING VEHICLE OBJECT HEIGHT IS 3.5 FEET ABOVE THE ROAD SURFACE AND THE VEHICLE IS ASSUMED LOCATED AT THE MOST CRITICAL OF EITHER 2 FEET RIGHT OF THE MEDIAN OR 8 FEET FROM THE RIGHT EDGE OF TRAVELED WAY DEPENDING ON THE NUMBER OF LANES AND ROAD ALIGNMENT.

LINE OF SIGHT= LINE ALONG WHICH SIGHT DISTANCE IS MEASURED. SIGHT DISTANCE SHALL BE CALCULATED IN ACCORDANCE WITH THE 2011 AASHTO POLICY ON GEOMETRIC DESIGN OF HIGHWAYS AND STREETS, TABLE 9.13, "TIME GAP FOR CASE F, LEFT TURNS FROM MAJOR ROAD", BASED ON THE HIGHER OF THE DESIGN SPEED (PER ROAD CLASSIFICATION AND COUNTY OF SAN DIEGO PUBLIC ROAD STANDARDS) OR THE PREVAILING SPEED ON THE MAJOR ROAD, WHICHEVER IS GREATER, AND ADJUSTED FOR THE NUMBER OF LANES TO BE CROSSED AND GRADE APPROACHING THE INTERSECTION ON THE MAJOR ROAD. THE AASHTO SIGHT DISTANCE SHALL BE INCREASED BY 50 FEET AND THE RESULTANT SIGHT DISTANCE SHALL BE CONSPICUOUSLY NOTED ON THE PLAN.

LIMITED USE AREA = AREA WITHIN RAISED MEDIANS WHERE SIGHT OBSTRUCTIONS AND VEGETATION ARE PROHIBITED.

NOTE: ALL LIMITED USE AREAS SHALL BE NOTED ON THE ROAD IMPROVEMENT AND LANDSCAPING PLANS WITH CONSPICUOUS TEXT STATING NO SIGHT OBSTRUCTIONS OR VEGETATION IN THIS AREA.

DRAWN BY: KVS	CHECKED BY: MLK	SAN DIEGO COUNTY DESIGN STANDARD	REVISIONS	APPROVED	DATE
RECOMMENDED BY: JEFF S. MOODY, P.E.			NEW	MLK	10/2012
APPROVED BY COUNTY ENGINEER		LIMITED USE AREA TYPE B			
DATE: 10/23/12 MOHAMAD FAKHRRIDDINE, P.E. R.C.E. NO. 44520, EXP 3/31/2014			DRAWING NUMBER	DS-20D	

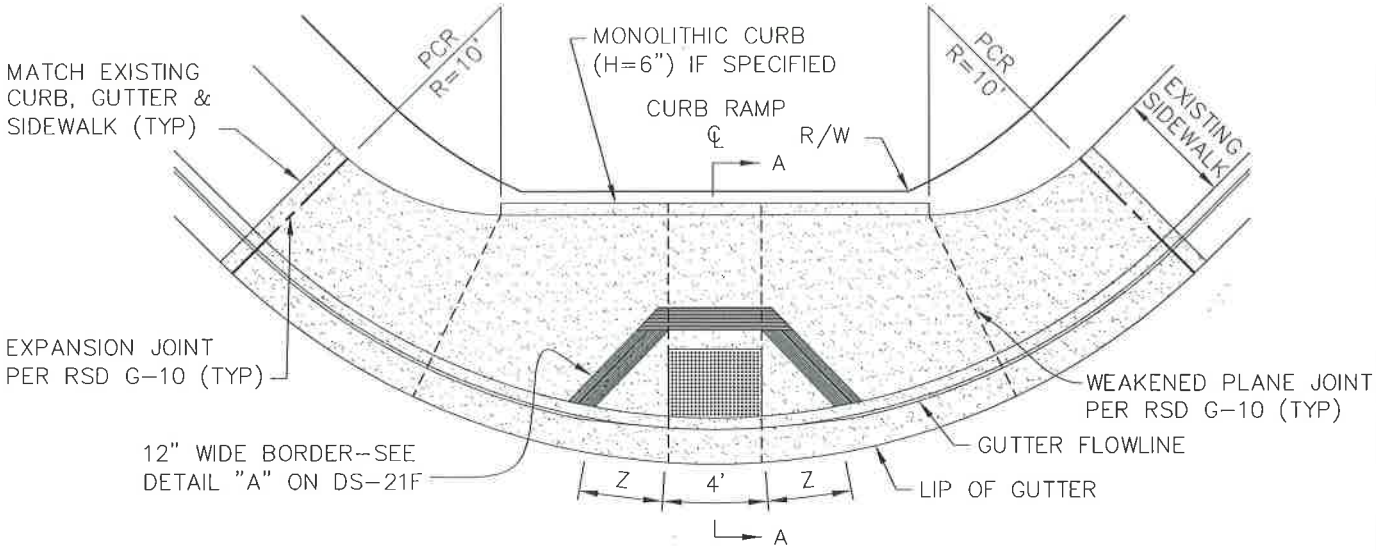

PLAN
NOT TO SCALE

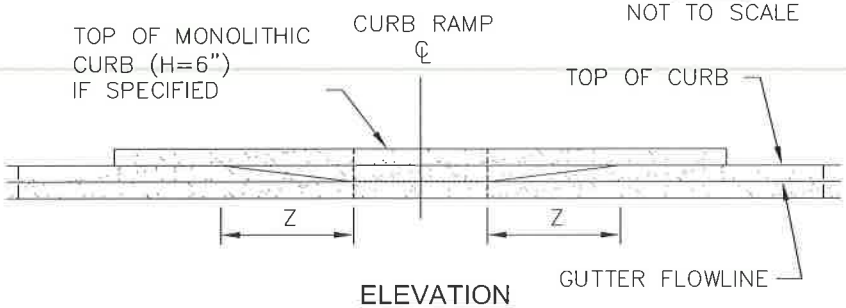

ELEVATION
NOT TO SCALE

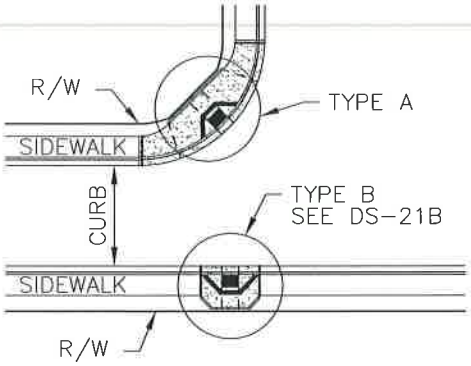

TABLE A		
	Y	Z
CURB HEIGHT	RAMP LENGTH	SIDE SLOPE*
1"	1'-0"	1'-0"
2"	2'-0"	2'-0"
3"	3'-0"	3'-0"
4"	4'-0"	4'-0"
5"	5'-0"	5'-0"
6"	6'-0"	6'-0"
7"	7'-0"	7'-0"
8"	8'-0"	8'-0"

* BASED ON 12:1 SLOPE RELATIVE TO GUTTER FLOW LINE

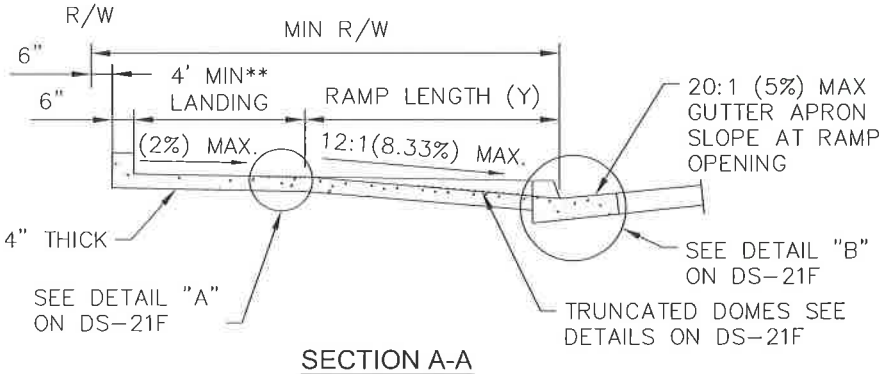

SECTION A-A
NOT TO SCALE

**PLANS SHALL SPECIFY A 5' LANDING WHERE TURNING SPACE IS CONSTRAINED

NOTES:

1. SEE DRAWINGS DS-21E AND DS-21F FOR ADDITIONAL INFORMATION
2. CURB RAMP SIDE SLOPES SHALL BE CONSTRUCTED PER TABLE A

DRAWN BY: PBM	CHECKED BY: JSM	SAN DIEGO COUNTY DESIGN STANDARD	REVISIONS	APPROVED	DATE
RECOMMENDED BY: JEFF S. MOODY, P.E.			ADA	JSM	10/2012
APPROVED BY COUNTY ENGINEER DATE: 10/15/12 MOHAMAD FAKHRRIDDINE, P.E. R.C.E. NO. 44520, EXP 3/31/2014		CURB RAMP - TYPE A (NEW CONSTRUCTION)	DRAWING NUMBER	DS-21A	

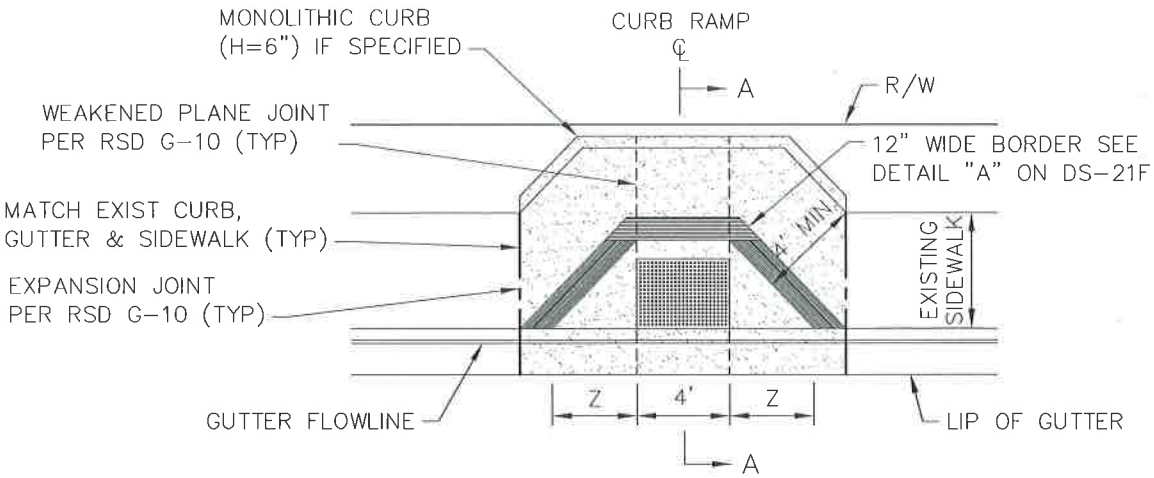

PLAN
NOT TO SCALE

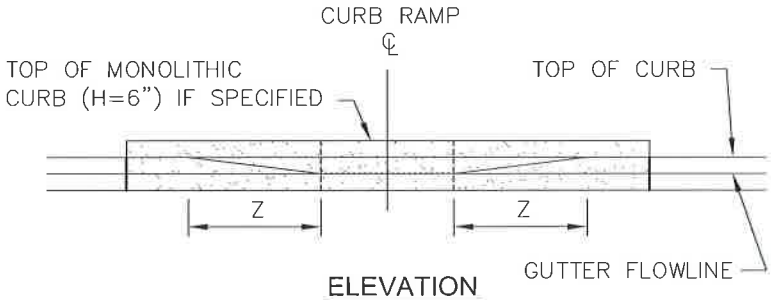

ELEVATION
NOT TO SCALE

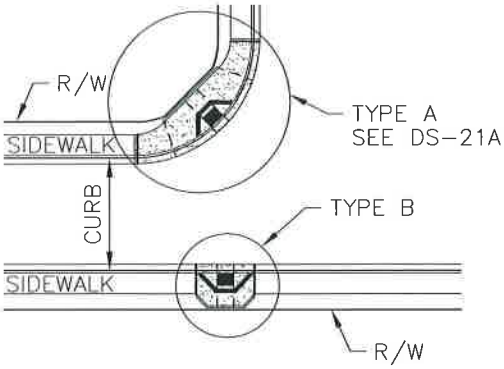

TABLE A		
	Y	Z
CURB HEIGHT	RAMP LENGTH	SIDE SLOPE*
1"	1'-0"	1'-0"
2"	2'-0"	2'-0"
3"	3'-0"	3'-0"
4"	4'-0"	4'-0"
5"	5'-0"	5'-0"
6"	6'-0"	6'-0"
7"	7'-0"	7'-0"
8"	8'-0"	8'-0"

* BASED ON 12:1 SLOPE
RELATIVE TO GUTTER FLOW LINE

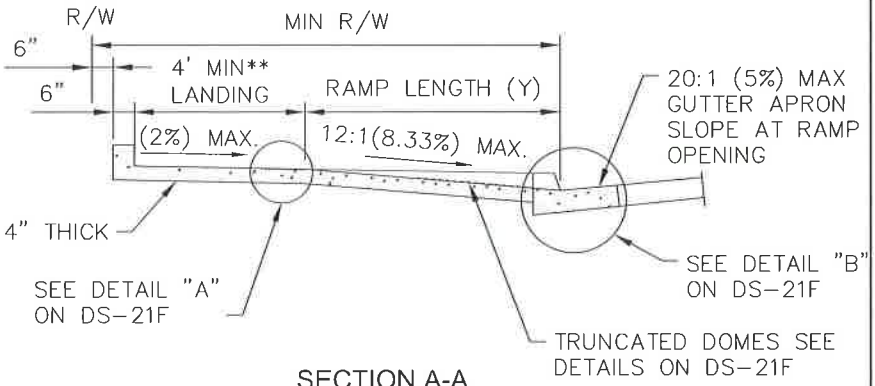

SECTION A-A
NOT TO SCALE

**PLANS SHALL SPECIFY A 5' LANDING
WHERE TURNING SPACE IS CONSTRAINED

NOTES:

1. SEE DRAWINGS DS-21E AND DS-21F FOR ADDITIONAL INFORMATION
2. CURB RAMP SIDE SLOPES SHALL BE CONSTRUCTED PER TABLE A

DRAWN BY: PBM	CHECKED BY: JSM	SAN DIEGO COUNTY DESIGN STANDARD	REVISIONS	APPROVED	DATE
RECOMMENDED BY: JEFF S. MOODY, P.E.			ADA	JSM	10/2012
APPROVED BY COUNTY ENGINEER DATE: 10/15/12 MOHAMAD FAKHRRIDDINE, P.E. R.C.E. NO. 44520, EXP 3/31/2014		CURB RAMP - TYPE B (NEW CONSTRUCTION)			
			DRAWING NUMBER	DS-21B	

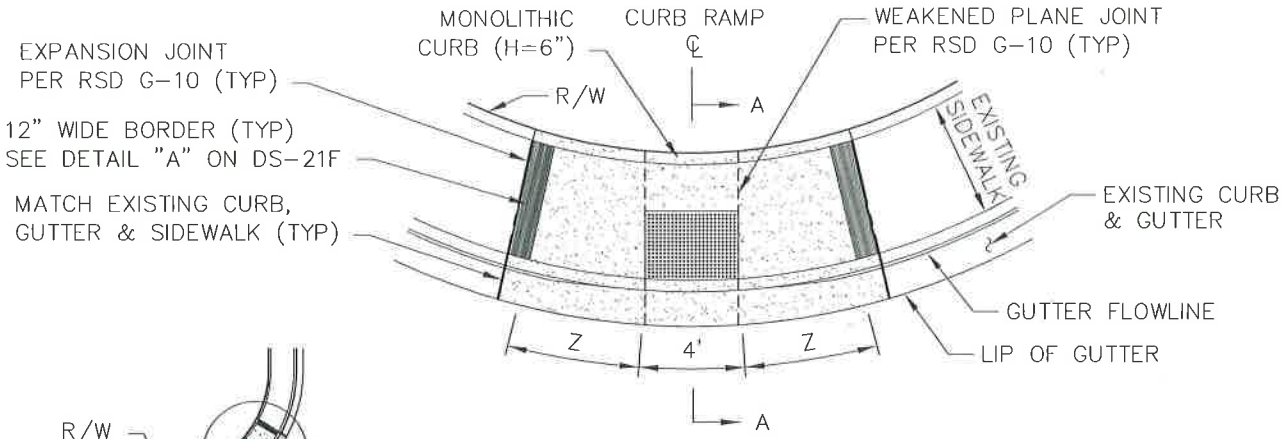

PLAN TYPE 1
NOT TO SCALE

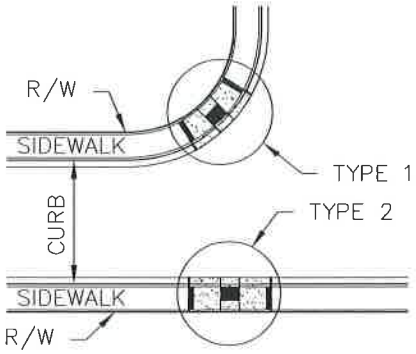

TABLE A	
	Z
CURB HEIGHT	SIDE SLOPE*
1"	1'-0"
2"	2'-0"
3"	3'-0"
4"	4'-0"
5"	5'-0"
6"	6'-0"
7"	7'-0"
8"	8'-0"

* BASED ON 12:1 SLOPE RELATIVE TO GUTTER FLOW LINE

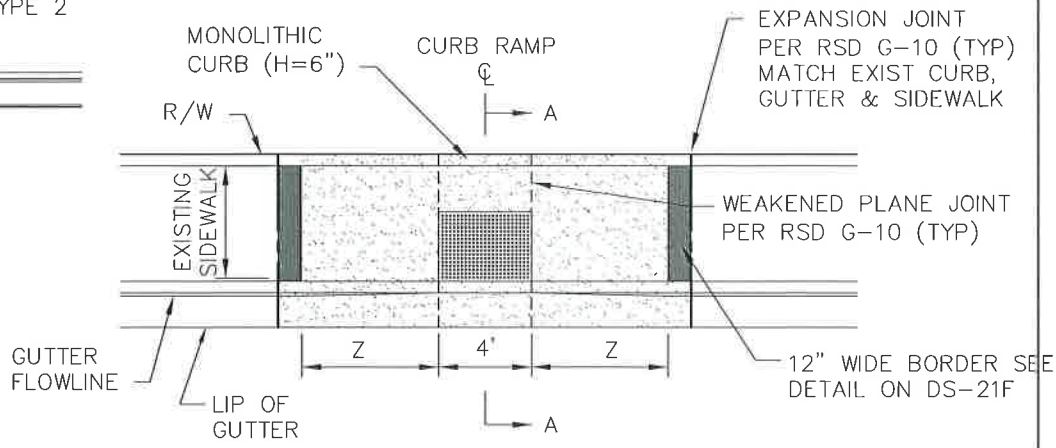

PLAN TYPE 2
NOT TO SCALE

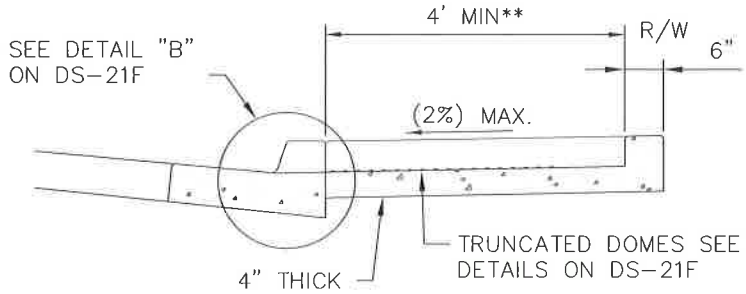

SECTION A-A
NOT TO SCALE

** 5' MIN WHERE TURNING SPACE IS CONSTRAINED

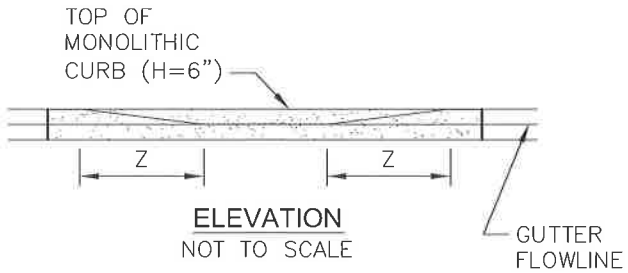

ELEVATION
NOT TO SCALE

NOTES:

1. SEE DRAWINGS DS-21E AND DS-21F FOR ADDITIONAL INFORMATION
2. CURB RAMP SIDE SLOPES SHALL BE CONSTRUCTED PER TABLE A
3. TYPE C CURB RAMPS SHALL BE USED ONLY TO MITIGATE EXISTING CONDITIONS WHERE R/W IS CONSTRAINED

DRAWN BY: PBM	CHECKED BY: JSM	SAN DIEGO COUNTY DESIGN STANDARD	REVISIONS	APPROVED	DATE
RECOMMENDED BY: JEFF S. MOODY, P.E.			ADA	JSM	10/2012
APPROVED BY COUNTY ENGINEER DATE: 10/15/12 MOHAMAD FAKHRIDDINE, P.E. R.C.E. NO. 44520, EXP 3/31/2014		CURB RAMP - TYPE C (EXISTING SIDEWALK)	DRAWING NUMBER	DS-21C	

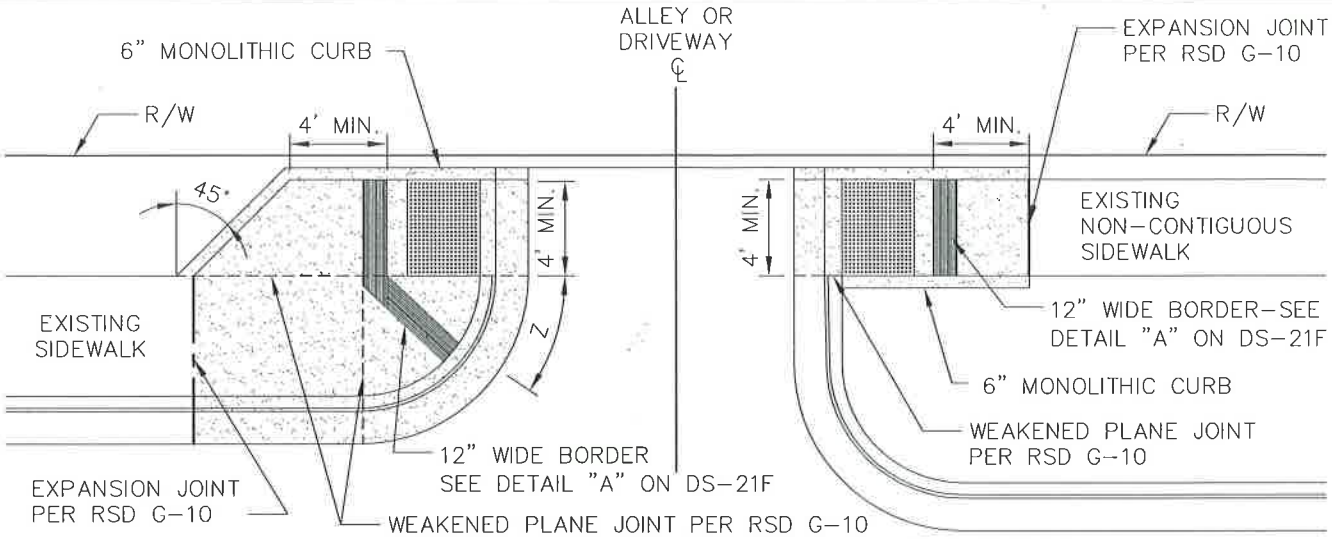

PLAN TYPE 1

NOT TO SCALE

PLAN TYPE 2

NOT TO SCALE

TABLE A		
	Y	Z
CURB HEIGHT	RAMP LENGTH	SIDE SLOPE*
1"	1'-0"	1'-0"
2"	2'-0"	2'-0"
3"	3'-0"	3'-0"
4"	4'-0"	4'-0"
5"	5'-0"	5'-0"
6"	6'-0"	6'-0"
7"	7'-0"	7'-0"
8"	8'-0"	8'-0"

* BASED ON 12:1 SLOPE RELATIVE TO GUTTER FLOW LINE

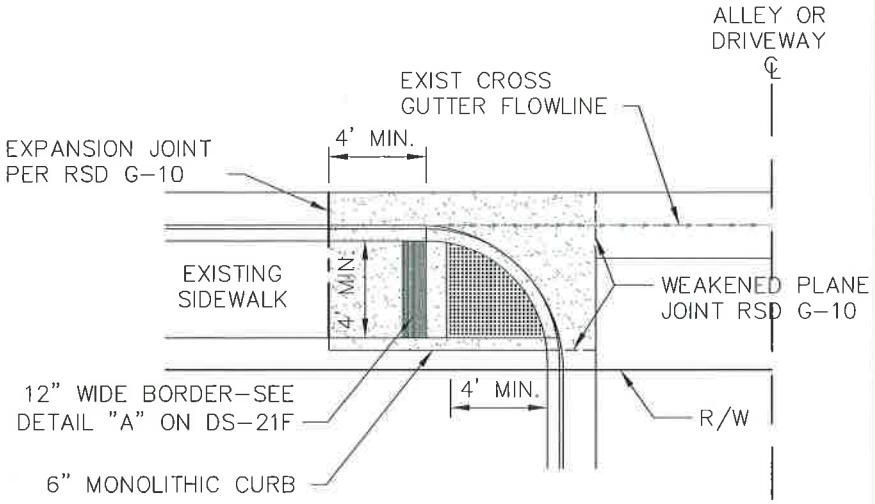

PLAN TYPE 3

NOT TO SCALE

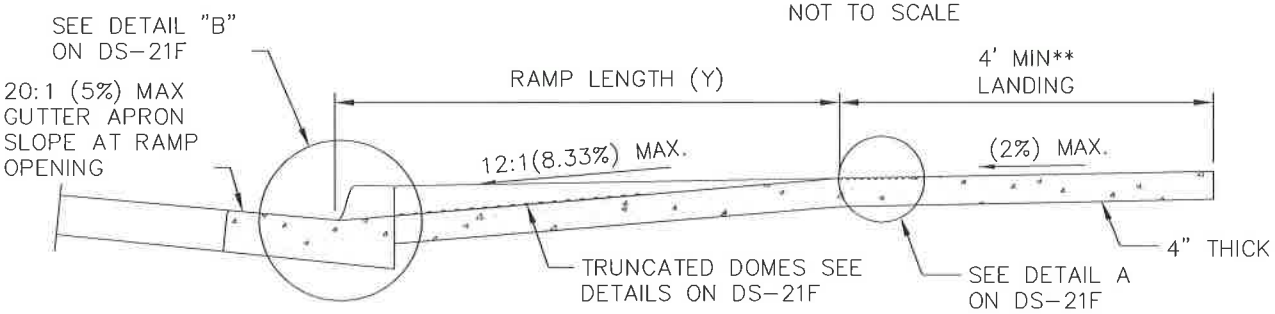

TYPICAL SECTION

NOT TO SCALE

**PLANS SHALL SPECIFY A 5' LANDING WHERE TURNING SPACE IS CONSTRAINED

NOTES:

1. SEE DRAWINGS DS-21E AND DS-21F FOR ADDITIONAL INFORMATION
2. TYPE D CURB RAMPS SHALL BE USED ONLY FOR ALLEY STREETS AND DRIVEWAYS
3. CURB RAMP SIDE SLOPES SHALL BE CONSTRUCTED PER TABLE A

DRAWN BY: PBM	CHECKED BY: JSM	SAN DIEGO COUNTY DESIGN STANDARD	REVISIONS	APPROVED	DATE
RECOMMENDED BY: JEFF S. MOODY, P.E.			ADA	JSM	10/2012
APPROVED BY COUNTY ENGINEER DATE: 10/15/12 MOHAMAD FAKHRRIDDINE, P.E. R.C.E. NO. 44520, EXP 3/31/2014		CURB RAMP - TYPE D (ALLEY STREETS & DRIVEWAYS)	DRAWING NUMBER	DS-21D	

CURB RAMPS NOTES:

1. REMOVAL AND REPLACEMENT OF EXISTING CONCRETE CURB, GUTTER, SIDEWALK AND PAVEMENT FOR PEDESTRIAN RAMP INSTALLATION SHALL COMPLY WITH SAN DIEGO AREA REGIONAL STANDARD DRAWING G-11.
2. CURB RAMP CONCRETE SHALL CONSIST OF GREENBOOK CLASS 520-C-2500 OR CALTRANS MINOR CONCRETE AS SPECIFIED IN THE PROJECT SPECIAL PROVISIONS, AND SHALL BE FINISHED WITH A MEDIUM TO HEAVY BROOM TEXTURE FINISH PERPENDICULAR TO THE AXIS OF THE RAMP.
3. AREAS DELINEATED BY [ ] REPRESENTS THE MINIMUM REQUIRED FOR A COMPLETE RAMP INSTALLATION.
4. IF OBSTRUCTIONS SUCH AS INLETS, UTILITY POLES, FIRE HYDRANTS, ETC. ARE ENCOUNTERED THE RAMP LOCATIONS MAY BE ADJUSTED UPON APPROVAL BY THE ENGINEER.
5. CURB RAMP SIDE SLOPES ARE TO BE MEASURED RELATIVE TO THE GUTTER FLOWLINE GRADE.
6. LANDING SLOPE SHALL BE 2% MAX MEASURED PARALLEL TO THE CURB RAMP CENTERLINE.
7. THE EDGE OF THE TRUNCATED DOME PANEL SHALL BE LOCATED 6" MINIMUM AND 8" MAXIMUM FROM THE GUTTER FLOW LINE. SEE DETAIL "B" ON DRAWING DS-21F. ANY CUTTING OF PANELS REQUIRED FOR COMPLIANCE SHALL CONFORM TO THE MANUFACTURER'S RECOMMENDATIONS.
8. WEAKENED PLANE JOINTS AND EXPANSION JOINTS SHALL CONFORM TO SAN DIEGO AREA REGIONAL STANDARD (RSD) DRAWING G-10.

DETECTABLE WARNING SURFACE (TRUNCATED DOME) NOTES:

9. TRUNCATED DOMES ARE A DETECTABLE WARNING SURFACE CONSISTING OF A CAST IN PLACE PREFABRICATED PANEL COMPOSED OF VITRIFIED POLYMER INCLUDING ALUMINUM OXIDE, SOUND AMPLIFYING, MATERIAL SUCH AS "ARMOR-TILE CAST-IN-PLACE TACTILE PANELS" OR APPROVED EQUAL.
10. THE CONTRACTOR SHALL SUBMIT PRODUCT INFORMATION, INSTALLATION INSTRUCTIONS AND TWO (2) PANEL SAMPLES (MINIMUM SIZE 6"X 8" EACH) TO THE ENGINEER FOR APPROVAL PRIOR TO ORDERING OR INSTALLING MATERIALS.
11. DETECTABLE WARNING SURFACE SHALL BE APPROVED IN WRITING BY THE ENGINEER PRIOR TO ORDERING.
12. THE DETECTABLE WARNING SURFACE SHALL BE COLORED DARK GREY CONTRASTING IN COLOR FROM CURB RAMP CONCRETE. THE CONTRAST SHOULD BE AT LEAST 70%. THE CONTRAST IN PERCENT IS DETERMINED BY:

    CONTRAST=((B1-B2)/B1)X100, WHERE

    B1=LIGHT REFLECTANCE VAUE (LRV) OF THE LIGHTER AREA
    B2=LIGHT REFLECTANCE VAUE (LRV) OF THE LIGHTER AREA

    NOTE THAT IN ANY APPLICATION BOTH WHITE AND BLACK ARE NEVER ABSOLUTE; THUS, B1 NEVER EQUALS 100 AND B2 IS ALWAYS GREATER THAN ZERO.
13. A CERTIFICATE OF COMPLIANCE SHALL BE FURNISHED TO CERTIFY THAT THE DETECTABLE WARNING SURFACES CONFORM TO THE AMERICANS WITH DISABILITY ACT ACCESSIBILITY GUIDELINES (ADAAG) AND REQUIREMENTS. THE CERTIFICATE OF COMPLIANCE SHALL INCLUDE A FIVE (5) YEAR WRITTEN MANUFACTURERS WARRANTY.
14. DURING PANEL INSTALLATION AND CONCRETE CURING THERE SHALL BE NO WALKING, LEANING OR EXTERNAL FORCES PLACED ON THE PANEL TO ROCK THE PANEL SO AS TO CAUSE A VOID BETWEEN THE PANEL AND THE CONCRETE. THE CONTRACTOR SHALL BLOCK OFF THE AREA TO PREVENT PEDESTRIAN ACCESS DURING CURING.
15. THE TOP DIAMETER OF EACH TRUNCATED DOME SHALL BE BETWEEN 50% MINIMUM AND 65% MAXIMUM OF THE BASE DIAMETER.

DRAWN BY: PBM	CHECKED BY: JSM	SAN DIEGO COUNTY DESIGN STANDARD	REVISIONS	APPROVED	DATE
RECOMMENDED BY: JEFF S. MOODY, P.E.			ADA	JSM	10/2012
APPROVED BY COUNTY ENGINEER DATE: 10/15/12 MOHAMAD FAKHRIDDINE, P.E. R.C.E. NO. 44820, EXP 3/31/2014		GENERAL NOTES FOR CURB RAMPS			
			DRAWING NUMBER	DS-21E	

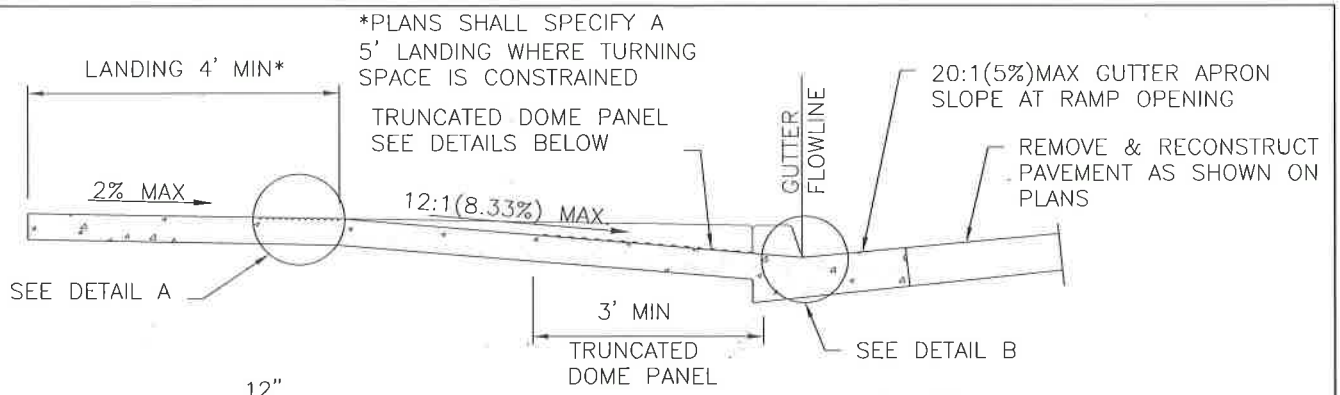

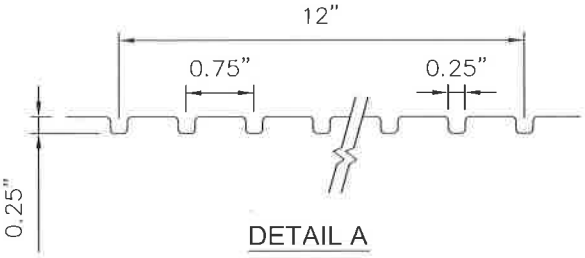

DETAIL A
NOT TO SCALE

DETAIL B
NOT TO SCALE

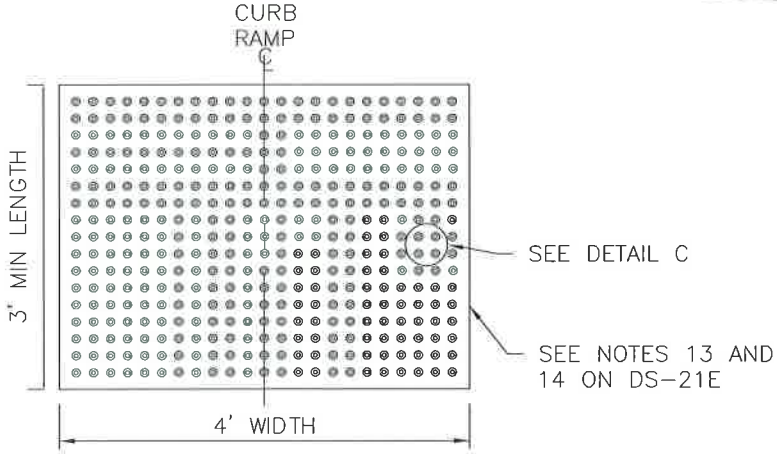

TRUNCATED DOME PANEL
NOT TO SCALE

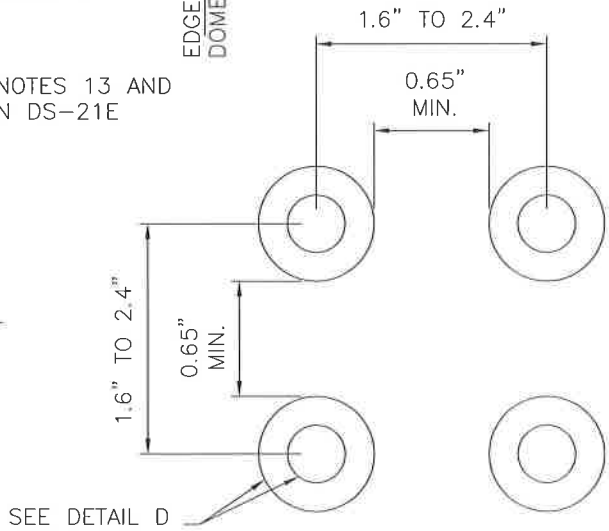

DETAIL C
NOT TO SCALE

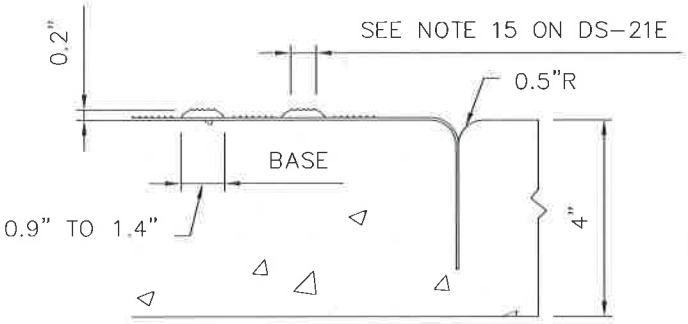

DETAIL D
NOT TO SCALE

NOTES:

1. ALL SLOPE RATIOS LISTED AS HORIZONTAL: VERTICAL

PATTERN, SIZE AND ORIENTATION OF DOMES SHALL BE PER MANUFACTURER'S RECOMMENDATION. SEE NOTE 13 ON DS-21E

DRAWN BY: PBM	CHECKED BY: JSM	SAN DIEGO COUNTY DESIGN STANDARD	REVISIONS	APPROVED	DATE
RECOMMENDED BY: JEFF S. MOODY, P.E.			ADA	JSM	10/2012
APPROVED BY COUNTY ENGINEER DATE: 10/15/12 MOHAMAD FAKHRIDDINE, P.E. R.C.E. NO. 44520, EXP 3/31/2014		CURB RAMP DETAILS	DRAWING NUMBER	DS-21F

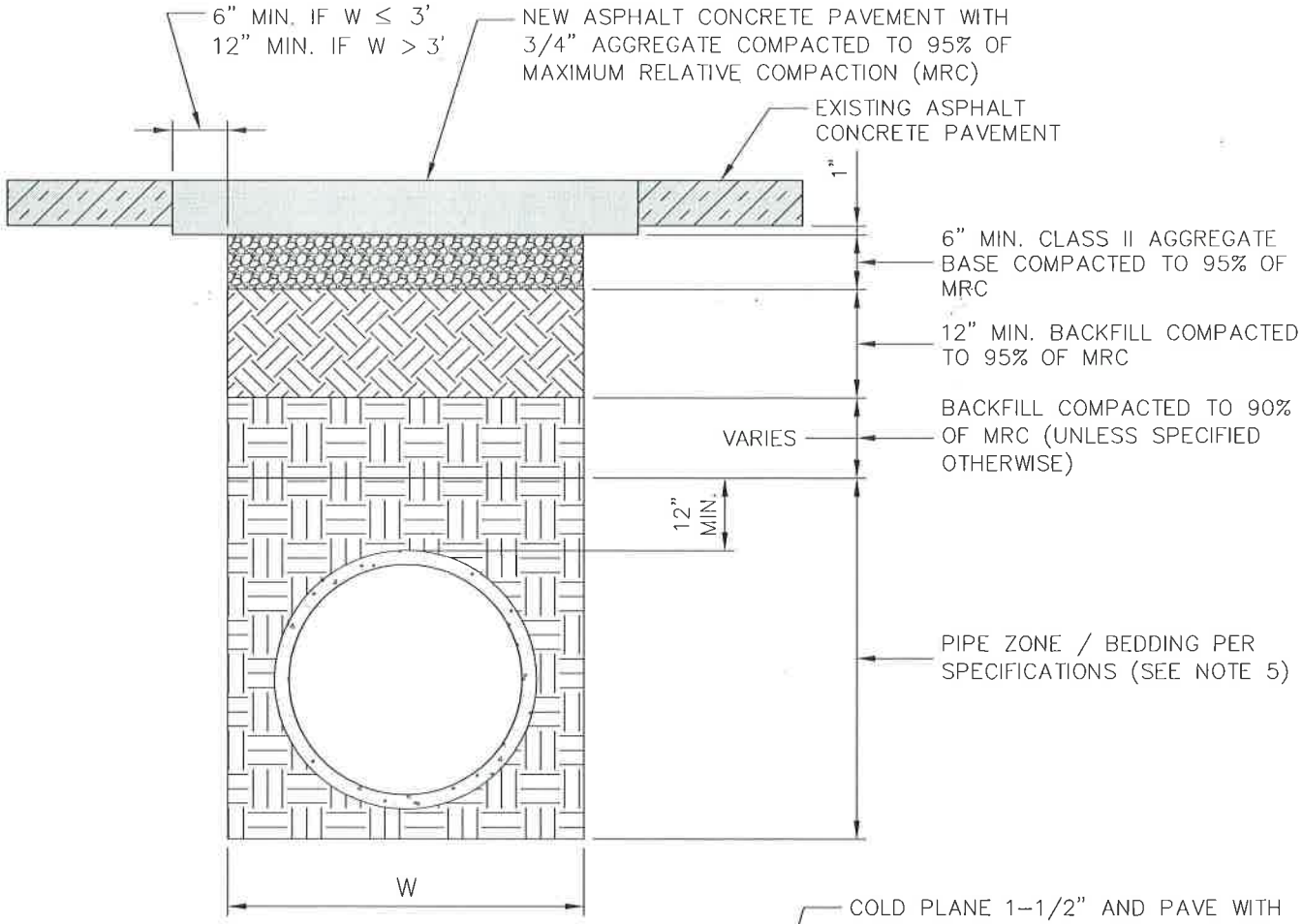

PHASE 1 - BASE PAVING
NOT TO SCALE

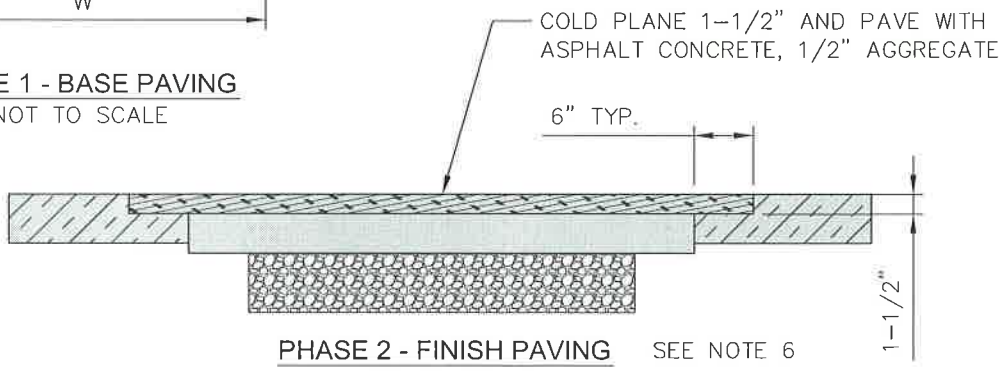

PHASE 2 - FINISH PAVING SEE NOTE 6
NOT TO SCALE

NOTES:

1. PAVEMENT MATERIAL AND SURFACING SHALL MATCH EXISTING.
2. ALL REMOVED SURFACE IMPROVEMENTS (CURBS, DIKES, SIDEWALKS, ETC.) SHALL BE REPLACED IN KIND.
3. ALL AREAS OF EXISTING AC LESS THAN 48" WIDE REMAINING AFTER TRENCHING SHALL BE COLD PLANED AND PAVED PER PHASE II FINISH PAVING.
4. PHASE I PAVEMENT THICKNESS SHALL EQUAL EXISTING PAVEMENT THICKNESS PLUS 1" (4" MINIMUM / 7" MAXIMUM).
5. WHEN GRAVEL OR ROCK IS USED WITHIN THE PIPE ZONE, THAT MATERIAL SHALL BE ENCAPSULATED IN A FILTER FABRIC ENVELOPE WITH W/2 > 12" MINIMUM OVERLAP. THIS REQUIREMENT APPLIES ONLY TO TRENCHES UNDER OR WITHIN 10' OF SURFACING.
6. PHASE II PAVING SHALL BE COMPLETED NOT EARLIER THAN 14 CALENDAR DAYS AND NOT LATER THAN 75 CALENDAR DAYS AFTER PHASE 1 PAVING.
7. FOR PCC PAVEMENT REFER TO RSD G25.

DRAWN BY: PBM	CHECKED BY: JSM	SAN DIEGO COUNTY DESIGN STANDARD	REVISIONS	APPROVED	DATE
RECOMMENDED BY: JEFF S. MOODY, P.E.			REV	JSM	10/2012
APPROVED BY COUNTY ENGINEER DATE: 10/15/12 MOHAMAD FAKHRRIDDINE, P.E. R.C.E. NO. 44520, EXP 3/31/2014		TRENCH SURFACING TYPE R	DRAWING NUMBER	DS-22

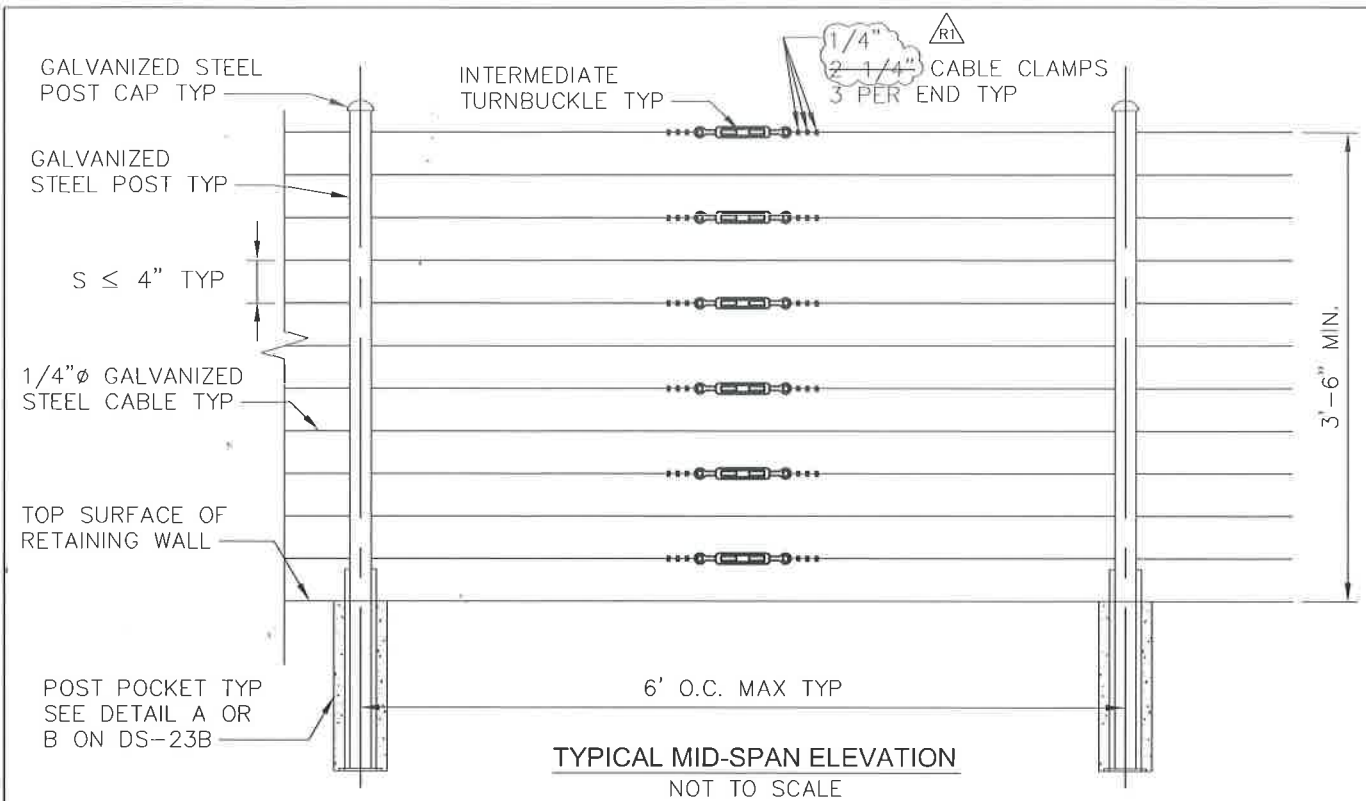

TYPICAL MID-SPAN ELEVATION
NOT TO SCALE

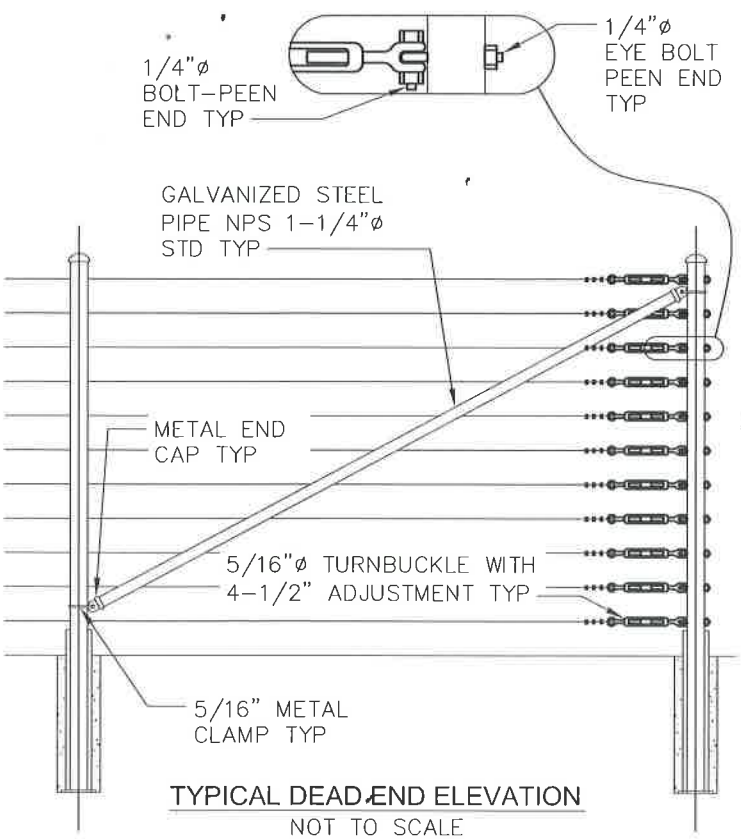

TYPICAL DEAD END ELEVATION
NOT TO SCALE

NOTES:

1. 200 FEET MAXIMUM DISTANCE BETWEEN TURNBUCKLES
2. STAGGER INTERMEDIATE TURNBUCKLES IN ADJACENT SPANS
3. NO CABLE SPLICING BETWEEN INTERMEDIATE TURNBUCKLE AND END POST
4. CABLE ALIGNMENT MAY VARY TO MATCH SLOPE IN TOP SURFACE OF RETAINING WALL
5. CONTRACTOR SHALL VERIFY ALL FIELD DIMENSIONS PRIOR TO ORDERING MATERIALS OR FABRICATING ASSEMBLIES
6. LINE POSTS SHALL BE BRACED HORIZONTALLY AND TRUSSED DIAGONALLY IN BOTH IN LINE DIRECTIONS AT INTERVALS NOT TO EXCEED 1000 FEET
7. R2 ALL CABLE ENDS SHALL BE CAPPED WITH MECHANICALLY LOCKING, STAINLESS STEEL CAP COVERS (QuickConnect-SS OR EQUAL)
8. WHERE HORIZONTAL FENCE ALIGNMENT DEFLECTS 15 DEGREES OR MORE, POSTS AT ANGLE POINTS SHALL BE BRACED IN BOTH IN LINE DIRECTIONS WITH DIAGONAL BRACING PER TYPICAL DEAD END ELEVATION DETAIL
9. THIMBLES SHALL BE INSTALLED ON ALL CABLE LOOPS
10. SEE DS-23B FOR ADDITIONAL DETAILS
11. CENTERLINE OF POST MUST BE AT LEAST 9 INCHES FROM NEAREST EXPANSION JOINT

DRAWN BY: EN	CHECKED BY: PBM	SAN DIEGO COUNTY DESIGN STANDARD	REVISIONS	APPROVED	DATE
RECOMMENDED BY: JEFF S. MOODY, P.E.			NEW	JSM	10/2012
APPROVED BY COUNTY ENGINEER		CABLE RAILING FOR RETAINING WALL	R1	EN	09/2013
DATE: 3/3/14			R2	EN	12/2013
MOHAMAD FAKHRRIDDINE, P.E. R.C.E. NO. 44520, EXP 3/31/2014			DRAWING NUMBER	DS-23A	

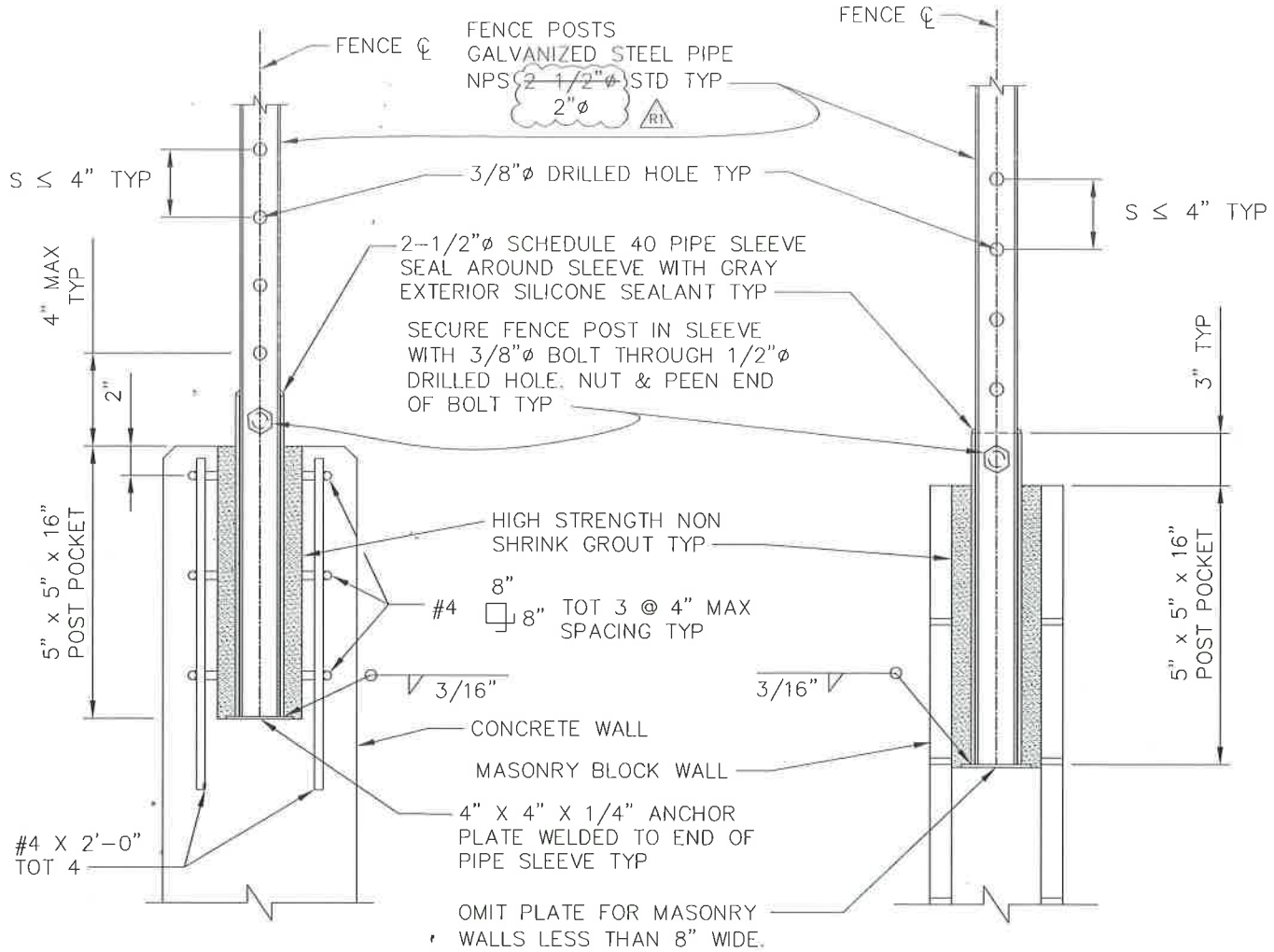

DETAIL A
CONCRETE RETAINING WALL
NOT TO SCALE
EXISTING REINFORCING NOT SHOWN FOR CLARITY

DETAIL B
MASONRY RETAINING WALL
NOT TO SCALE
EXISTING REINFORCING NOT SHOWN FOR CLARITY

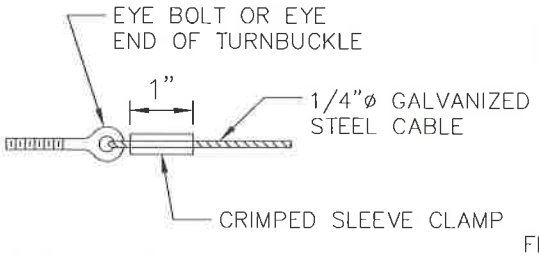

ALTERNATIVE CABLE CONNECTION
NOT TO SCALE

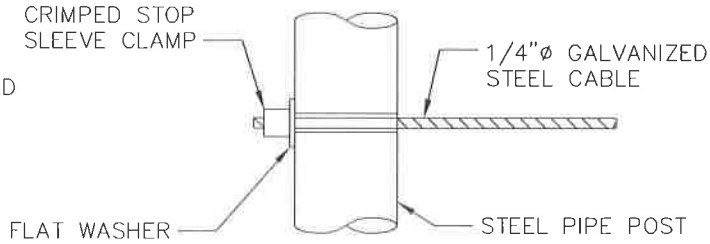

ALTERNATIVE DEAD END ANCHORAGE
NOT TO SCALE

NOTES:
1. POST SHALL BE CENTERED IN WALL AND PLUMB
2. ALL METAL COMPONENTS AND HARDWARE SHALL BE HOT DIP GALVANIZED AFTER FABRICATION
3. ONLY ONE OF THE TWO ALTERNATIVE CONNECTIONS IS ALLOWED FOR THE SAME CABLE END

DRAWN BY: EN	CHECKED BY: PBM	SAN DIEGO COUNTY DESIGN STANDARD	REVISIONS	APPROVED	DATE
RECOMMENDED BY: JEFF S. MOODY, P.E.			NEW	JSM	10/2012
APPROVED BY COUNTY ENGINEER		CABLE RAILING DETAILS	R1	EN	09/2013
DATE 3/3/14					
MOHAMAD FAKHRIDDINE, P.E. R.C.E. NO. 44520, EXP 3/31/2014			DRAWING NUMBER	DS-23B	