SAN DIEGO AREA

REGIONAL STANDARD DRAWINGS

STANDARD DRAWINGS FOR AGENCIES IN THE SAN DIEGO REGION

Recommended by the Regional Standards Committee
Maintained and Published by the County of San Diego
Department of Public Works
April 2006
www.regional-stds.com

Mission Statement: Cost effective government through regional construction standards for San Diego area agencies.

FOREWORD

These 2006 San Diego Area Regional Standard Drawings have been prepared and adopted by the San Diego Regional Standards Committee (RSC) for use in San Diego County with the Public Works Standards, Inc "Greenbook" Standard Specifications for Public Works Construction, 2006 Edition and the "2006 Regional Supplements to the Greenbook 2006".

The San Diego Area Regional Standard Drawings are published every three years however updates are posted on the Web Site http://www.regional-stds.com as changes are adopted. The website also contains Information about membership, operating procedures, meeting schedules, agenda and minutes, standard drawings and specifications, and a form for submitting proposed revisions. Users of the San Diego Area Regional Standard Drawings are encouraged to submit proposed changes to the Regional Standards staff at:

County of San Diego
Department of Public Works
Attention: Sandy Brady P.E., Coordinator
5555 Overland Avenue, MS 0340
San Diego, CA 92123.

This year's edition has been through an extensive review to assure conformance to current design and construction practices. Several sections have been completely redone, such as the Section "S" and Section "W" which now use a new two alpha prefix for example "SM" is used for Sewer Manhole drawings and WB is used for Water Blow–off drawings. The "I" Section and "L" Section also had major changes but the numbering has continued to use the traditional single alpha prefix.

The last three years have required a major commitment by the following subcommittee chairs and the County of San Diego Coordinator who have made this comprehensive review possible:

Sandy Brady	County of San Diego Coordinator	
Mark Caro	Landscaping Committee Chair	City of Chula Vista
Dino Ciafre	Traffic/Lighting Committee Chair	City of San Diego
Dennis Davies	Streets/Roads Committee Chair	City of El Cajon
Debbie Day	Drainage/NPDES Committee Chair	EGCA
Dirk Epperson	Structural Committee Chair	City of Lemon Grove
Jim Tomasulo	Wet Utilities Committee Chair	Helix Water District

The "Greenbook" was first published in 1967 and the Regional Standards Committee was established under San Diego County Board of Supervisors Policy I-50 in 1973. The Regional Standards Committee membership is open to the City Engineers, Directors of Public Works, District Engineers and Heads of Engineering, or their designees, from the County of San Diego, cities within the County of San Diego, all water and sewer districts, utility companies, construction associations, consultant associations, and various private industry organizations. The County Department of Public Works provides coordination and staff support for the Regional Standards Committee. The RSC Chair is selected by the committee members and serves a three-year term.

In 2003 the RSC decided to provide the standard drawings with dual units to be consistent with the "Greenbook". The RSC elected to use "hard conversion" from English imperial units to metric units in the supplements and standard drawings. Hard conversion is defined as calculating the actual value in metric units from English imperial units and then rounding up for 5 and above. The "Greenbook" uses soft and hard conversions.

Timothy N. Stanton, P.E.

Chair, Regional Standards Committee

PROPOSED REVISION TO THE REGIONAL STANDARDS	Draft No.
☐ Specification ☐ Drawing	Date

REASON FOR REVISION:

SUBMITTED BY:

NAME:_____ PHONE:_____

AGENCY:_____ ADDRESS:_____

Subcommittee:_____	Regional Standards Committee
Date: _____	Date:_____
☐ RECOMMENDED ☐ AS MODIFIED ☐ REJECTED	☐ RECOMMENDED ☐ AS MODIFIED ☐ REJECTED

TABLE OF CONTENTS

SECTION C - CONCRETE STRUCTURES

C-1 Masonry Retaining Wall Type 1 (Level Backfill)

C-2 Masonry Retaining Wall Type 2 (Live Load Surcharge or Sloping Backfill)

C-3 Masonry Retaining Wall Type 3 (Level Backfill)

C-4 Masonry Retaining Wall Type 4 (Live Load Surcharge or Sloping Backfill)

C-5 Masonry Retaining Wall Type 5 (Level Backfill)

C-6 Masonry Retaining Wall Type 6 (Live Load Surcharge or Sloping Backfill)

C-7 General Notes for Masonry Retaining Walls

C-8 Details for Masonry Retaining Wall

C-9 Gravity Retaining Walls

C-10 General Notes and Details for Gravity Retaining Walls

C-11A Reinforced Concrete Retaining Wall Type 1

C-11B Reinforced Concrete Retaining Wall Type 1

C-11C Reinforced Concrete Retaining Wall Type 1

C-11D Reinforced Concrete Retaining Wall Type 1

C-12A Reinforced Concrete Retaining Wall Type 1A

C-12B Reinforced Concrete Retaining Wall Type 1A

C-13A Reinforced Concrete Retaining Wall Details No. 1

C-13B Reinforced Concrete Retaining Wall Details No. 1

C-13C Reinforced Concrete Retaining Wall Details No. 1

C-13D Reinforced Concrete Retaining Wall Details No. 1

C-14 Reinforced Concrete Retaining Wall Details No. 2

C-15 Reinforced Concrete Retaining Wall Details No. 3

DRAINAGE SYSTEMS

D-1 Curb Inlet - Type A

D-2 Curb Inlet - Type B

D-3 Curb Inlet - Type C

D-4 Curb Inlet - Type D

D-5A Curb Inlet - Type D (Details)

D-5B Curb Inlet - Type D (Details)

D-7 Catch Basin - Type F

D-8 Catch Basin - Type G

D-9 Storm Drain Cleanout - Type A

D-10 Storm Drain Cleanout - Type B

D-11A Inlets and Cleanouts - Notes and Details

D-11B Inlets and Cleanouts - Notes and Details

D-12 Curb Inlet Opening

D-13 Welded Steel Grate Frame

D-15 Drainage Structure Grate

D-16 Corrugated Steel Pipe Inlets Types A & B

D-17A Corrugated Steel Pipe Inlets, Details

D-17B Corrugated Steel Pipe Inlets, Details

D-18 Slotted Corrugated Steel Pipe Drains 12" through 24"

D-19 Slotted Drain Connections to Standard Inlets

D-20 Concrete Apron for Curb Inlet

D-22 Asphalt Concrete Spillway

TABLE OF CONTENTS

D-23 Tapered Inlet and Downdrain Flume

D-24A Entrance Taper and Downdrain Pipe

D-24B Entrance Taper and Downdrain Pipe

D-25 Curb Outlet - Type A

D-27 Sidewalk Underdrain Pipe

D-29 Catch Basin - Type 1

D-30 Straight Headwall - Type A (Circular Pipe)

D-31 Straight Headwall - Type A (C.S.P. - Arch)

D-32 Straight Headwall - Type B (Circular Pipe)

D-33 Straight Headwall - Type B (C.S.P. - Arch)

D-34 Wing and U Type Headwalls for 18" to 36" Pipes

D-35A Wing and U Type Headwalls for 42" to 84" Pipes

D-35B Wing and U Type Headwalls for 42" to 84" Pipes

D-36 L Type Headwalls - Circular Pipes

D-37 L Type Headwalls - CSP Arch Pipes

D-38 Curtain Wall

D-39 Inlet Apron for Culverts Up to 42" Diameter

D-40 Rip Rap Energy Dissipator

D-41A Concrete Energy Dissipator

D-41B Concrete Energy Dissipator

D-42 Concrete Energy Dissipator (Reinforcement) 18" to 30" Diameter Pipe

D-43A Concrete Energy Dissipator (Reinforcement) 36" to 72" Diameter Pipe

D-43B Concrete Energy Dissipator (Reinforcement) 36" to 72" Diameter Pipe

D-43C Concrete Energy Dissipator (Reinforcement) 36" to 72" Diameter Pipe

D-44A Pipe Culvert - Headwalls, Endwalls and Warped Wingwalls

D-44B Pipe Culvert - Headwalls, Endwalls and Warped Wingwalls

D-44C Pipe Culvert - Headwalls, Endwalls and Warped Wingwalls

D-44D Pipe Culvert - Headwalls, Endwalls and Warped Wingwalls

D-45 Median Curb Inlet – Type J

D-60 Pipe Bedding and Trench Backfill for Storm Drains

D-61 Rounded Pipe Ends in Drainage Structures

D-62 Pipe Collar

D-63 Concrete Lug

D-70 Minor Drainage Channel

D-71 Major Drainage Channel

D-72 Cutoff Wall for Drainage Channel

D-73 Pipe to Channel Connection

D-74 Graded Earth Channel

D-75 Drainage Ditches

D-76A Single Box Culvert, Details No. 1

D-76B Single Box Culvert, Details No. 1

D-76C Single Box Culvert, Details No. 1

D-76D Single Box Culvert, Details No. 1

D-76E Single Box Culvert, Details No. 1

D-76F Single Box Culvert, Details No. 1

TABLE OF CONTENTS

D-76G Single Box Culvert, Details No. 1

D-76H Single Box Culvert, Details No. 1

D-76I Single Box Culvert, Details No. 1

D-76J Single Box Culvert, Details No. 1

D-76K Single Box Culvert, Details No. 2

D-77A Double Box Culvert, Details No. 1

D-77B Double Box Culvert, Details No. 1

D-77C Double Box Culvert, Details No. 1

D-77D Double Box Culvert, Details No. 1

D-77E Double Box Culvert, Details No. 1

D-77F Double Box Culvert, Details No. 1

D-77G Double Box Culvert, Details No. 1

D-77H Double Box Culvert, Details No. 1

D-77I Double Box Culvert, Details No. 1

D-77J Double Box Culvert, Details No. 1

D-77K Double Box Culvert, Details No. 1

D-77L Double Box Culvert, Details No. 1

D-77M Double Box Culvert, Details No. 2

D-78A Triple Box Culvert, Details No. 1

D-78B Triple Box Culvert, Details No. 1

D-78C Triple Box Culvert, Details No. 1

D-78D Triple Box Culvert, Details No. 1

D-78E Triple Box Culvert, Details No. 1

D-78F Triple Box Culvert, Details No. 1

D-78G Triple Box Culvert, Details No. 1

D-78H Triple Box Culvert, Details No. 1

D-78I Triple Box Culvert, Details No. 1

D-78J Triple Box Culvert, Details No. 1

D-78K Triple Box Culvert, Details No. 1

D-78L Triple Box Culvert, Details No. 1

D-78M Triple Box Culvert, Details No. 2

D-79A Box Culvert Wingwall Types A, B and C, Details No. 1

D-79B Box Culvert Wingwall Types A, B and C, Details No. 2

D-79C Box Culvert Wingwall Types A, B and C, Details No. 2

D-79D Box Culvert Wingwall Types A, B and C, Details No. 2

D-79E Box Culvert Wingwall Types A, B and C, Details No. 2

D-79F Box Culvert Wingwall Types A, B and C, Details No. 2

D-80A Box Culvert Warped Wingwall, Details No. 1

D-80B Box Culvert Warped Wingwall, Details No. 2

D-80C Box Culvert Warped Wingwall, Details No. 3

D-81A Box Culvert, Miscellaneous Details No. 1

D-81B Box Culvert, Miscellaneous Details No. 2

D-82 Debris Fence

ELECTRICAL SYSTEMS

E-I Street Lighting Standard

E-2 Grounding of Concrete Lighting Standards

E-33 Pedestal for Electrical Equipment

TABLE OF CONTENTS

GENERAL SURFACE IMPROVEMENTS

G-1 Curbs and Gutter-Separate

G-2 Curb and Gutters - Combined

G-3 Monolithic Curb, Gutter and Sidewalk

G-4 Curb and Gutter - Rolled

G-5 Dikes - Asphalt Concrete

G-6 Curbs and Gutter - Medians

G-7 Sidewalk - Typical Sections

G-9 Sidewalk Joint Locations

G-10 Concrete Joint Details

G-11 Concrete Curb, Gutter, Sidewalk & Pavement Removal and Replacement

G-12 Cross Gutter

G-13 Mid-Block Cross Gutter

G-14A Concrete Driveway (Contiguous Sidewalk)

G-14B Concrete Driveway (Non-contiguous Sidewalk)

G-14C Residential Concrete Driveway (Parkway less than 10' in depth)

G-14D Concrete Driveway (for Confined Right-of-Way)

G-15 Driveway Location – Adjacent to Curb Returns and Street Lines

G-16 Driveway Location and Width Requirements

G-17 Alley Apron

G-18 Concrete Pavement, Width 40' or Less

G-19 Concrete Pavement, Width 40' to 62'

G-20 Concrete Pavement, Alley Section, Width 53' to 69'

G-21 Concrete Pavement, Alley Section, Width 40' or Less

G-22 Cutoff Wall at End of Pavement

G-23 Cutoff Wall at End of Alley Pavement

G-24 Trench Resurfacing Types A & B

G-25 Trench Resurfacing Types C & D

G-26 Concrete Driveway Commercial Alternate

G-27 Curb Ramp - Types A and B (New Construction)

G-28 Curb Ramp - Types A-1 and B-1 (For Existing Sidewalk)

G-29 Curb Ramp - Type C (For Existing Sidewalk)

G-30 Truncated Domes

G-31 Curb Ramp - Type D

G-32 General Notes for Curb Ramps

G-33 Narrow Trenches Trenching & Backfilling

G-36 Slurry Backfill

SECTION I - SPRINKLER IRRIGATION SYSTEMS

I-1 Shrub Spray Head, on Fixed Riser

I-2 Rotor or Impact Head on Fixed Riser

I-3 Rotor or Spray Pop-Up Head

I-4 Deep Root Tree Bubbler

I-5 Quick Coupling Valve

I-7 Atmospheric Vacuum Breaker (2" and Smaller)

I-10 Irrigation Master Valve

I-11 Isolation Ball Valve (2" and Smaller)

I-13 Isolation Globe Valve (2" and Smaller)

TABLE OF CONTENTS

I-14 Remote Control Valve

I-15 Electrical Pull Box for Direct Burial Control Wires and Splice Details

I-16 Control Wire/Cable Installation

I-17 Automatic Controller Pedestal Mounted

I-18 Automatic Controller Indoor Wall Mount

I-20 On-Grade Pipe Stabilization

I-23 Swing Joint and Pipe Installation on Slopes Above Ground Pipe Installations

I-24 Double Swing Joint- Above Ground Pipe Installations

I-25 Irrigation Trench P.V.C. and/or Copper Pipe (3" and Smaller)

I-26 Irrigation Trench Detail 4" and Larger P.V.C. Mainline

I-32 Remote Control Valve Manifold Assembly with P.V.C. Pipe

I-33 Remote Control Valve Manifold Assembly with Brass Pipe

I-35 Remote Control Valve Drip Irrigation

I-36 Air/Vacuum Relief Valve

I-37 Drip Irrigation Flush Valve (Automatic)

SECTION L - LANDSCAPING

L-1 Tree Planting & Staking

L-2 Shrub Planting

L-3 Concrete Mowing Strip

L-4 Tree Grate

L-5 Light Pole Pad in Turf Areas

L-6 Root Control Barrier

SECTION M - MISCELLANEOUS

M-1 24" Manhole Frame and Cover, Heavy Duty

M-2 24" Manhole Frame and Cover, Light Duty

M-3 36" Manhole Frame and Two Concentric Covers, Heavy Duty

M-4 Manhole Cover Locking Device

M-5 Chain Link Gate

M-6 Chain Link Fence

M-7 Narrow Trenches - Trenching & Backfilling

M-7A Narrow Trenches - Trenching & Backfilling

M-8 Narrow Trenches - Trenching & Backfilling - Shallow Conduit Depth

M-9 Guard Post and Barricade

M-10 Street Survey Monument

M-11 Bench Mark - Brass Plug

M-12 Datums

M-13 Survey Monuments

M-14 Metric Equivalents

M-15 Joint Trench Location

M-16 Demountable Post

M-17 Tennis Court Fence Chain Link

M-18 Drinking Fountain

M-19 Fire Hydrant Markers

M-20 Chain Link Fence, Details

M-21 Underground Typical Location, Conversion/Replacement/Upgrade

M-22 Utility Locations, Local and Major Streets

TABLE OF CONTENTS

M-23 Utility Locations Prime Arterials and Expressways

M-24 Pedestrian Protective Railing, Details No. 1

M-25 Pedestrian Protective Railing, Details No. 2

M-26 Concrete Steps

M-27A Disabled Parking Stall(s)

M-27B Diagonal Disabled Parking Stall(s)

M-28A Disabled Parking Sign

M-28B Van Accessible Sign for Disabled Parking Space

M-29 Pavement Symbol, Disabled Parking

M-30 Guard Rail Reference Note

M-45 Break-Away Sign Post

SECTION S - SEWERAGE SYSTEMS

SC-1 Sewer Cleanout

SM-1 48" Diameter Precast Manhole Installation

SM-2 60" Diameter Precast Manhole Installation

SM-3 Sewer Manhole Base

SM-4 Manhole Pipe Connectors

SM-5 Manhole Miscellaneous Details

SM-7 Manhole Coating and Lining System

SM-8 Existing Manhole Abandonment

SP-1 Warning/Identification Tape Installation

SP-2 Pipe Bedding and Trench Backfill for Sewer Facilities

SP-3 Concrete Protection for Sewer Pipe

SP-5 Slope Protection Installations

SP-7 Cutt-Off Wall Installation in Traveled Areas

SP-9 Pipe Support for Undercut Sewer Mains or Sewer Laterals

SS-1 4" and 6" Sewer Lateral Installation

SS-2 4" and 6" Deep-Cut Sewer Lateral Installation

SS-3 Sewer Lateral Notes and Detail

SS-4 4" and 6" Sewer Cut-In Wye Connections

SECTION W - WATER SYSTEMS

WA-1 2" Manual Air Valve

WA-2 2" Automatic Combination Air Release and Air/Vacuum Valve Installations

WA-4 4" and 6" Automatic Combination Air Release and Air/Vacuum Valve Installations

WA-6 Air and Vacuum Valve Enclosure Locations

WB-1 2" Blow-Off Installation

WB-2 4" and 6" Blow-Off Installation – Type A

WB-3 4" and 6" Blow-Off Assemblies in Street – Type B

WB-4 Blow-Off Installation from end of Mains and from Steel Mains

WB-5 Temporary 2" Blow-Off Installation

WF-1 6" Fire Hydrant Installation

WF-2 6" Fire Hydrant Installation with Break-Off Check Valve

WF-4 Fire Hydrant Locations and Port Orientation

WF-5 4" and Larger Fire Service Installation

WM-4 Protection Post Installation

WP-1 Warning/Identification Tape and Tracer Wire Installations

WP-2 Pipe Bedding and Trench Backfill for Potable and Recycled Water Mains

TABLE OF CONTENTS

WP-3 Cutting and Plugging Abandoned Water, Recycled Water and Sewer Mains

WP-5 Slope Protection Installations

WP-7 Cut-Off Wall Installation in Traveled Areas

WP-9 Pipe Support for Undercut Sewer Mains or Sewer Laterals

WR-1 Reduced Pressure Backflow Prevention Device (¾" Thru 2")

WR-2 3" and Larger Reduced Pressure Backflow Prevention Device

WS-1 1" Water Service Installation

WS-2 2" Water Service Installation

WS-3 Meter Box Locations for Water and Recycled Water Appurtenances

WS-4 4" or 6" Fireline/Master Meter Installation

WT-1 Concrete Thrust and Anchor Block Installations

WV-1 Gate Well Cap Installation for Valves 4" and Larger

WV-2 Gate Well Cap & Can Installation for Valves 4" and Larger

WV-3 Gate Well Identification

WV-4 Steel Valve Stem Extension for Valves 4" and Larger

WV-5 Steel Valve Stem Extension for Valves 2" and Smaller

APPENDIX A

Traffic Control Plans

CONCRETE STRUCTURES

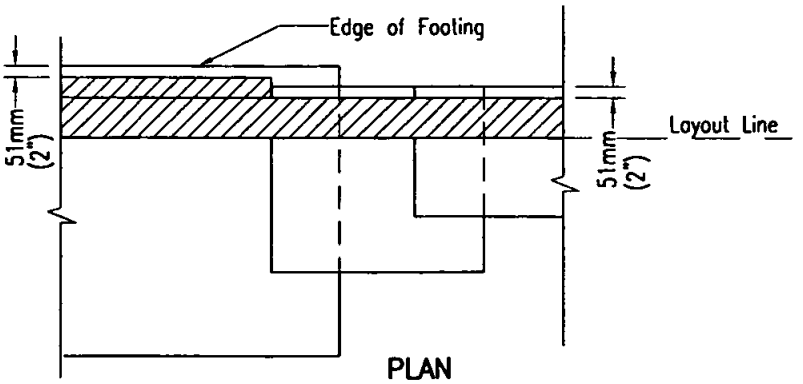

PLAN

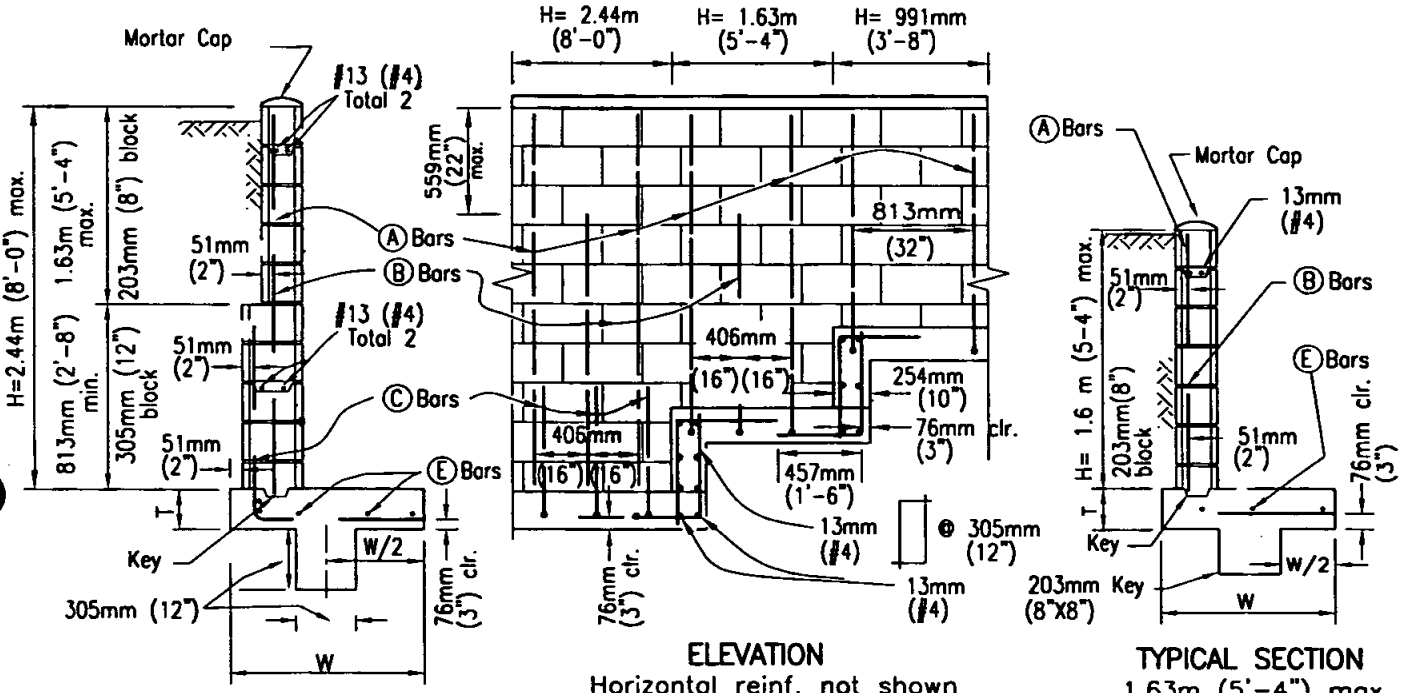

TYPICAL SECTION
over 1.63m (5'-4")

ELEVATION
Horizontal reinf. not shown

TYPICAL SECTION
1.63m (5'-4") max.

DIMENSIONS AND REINFORCING STEEL			
H (max.)	1.12m (3'-8")	1.63m (5'-4")	2.44m (8'-0")
T (min.)	203mm (0'-8")	254mm (0'-10")	305mm (1'-0")
W (min.)	762mm (2'-4")	1.12m (3'-6")	1.63m (5'-4")
Ⓐ Bars	#13@813mm (#4@32")	#13@813mm (#4@32")	#13@813mm (#4@32")
Ⓑ Bars	——	#13@813mm (#4@32")	#13@813mm (#4@32")
Ⓒ Bars	——	——	406mm (#6@16")
Ⓔ Bars	#13 (#4) Total 4	#13 (#4) Total 5	#13 (#4) Total 6
max soil press.	23.9 Kpa (500psf)	28.7 Kpa (600psf)	38.3 Kpa (800psf)

NOTES: 1. See Standard Drawings C-7 and C-8 for additional notes and details.
2. Fill all block cells with grout.

Revision	By	Approved	Date
ORIGINAL		Kercheval	12/75
Add Metric		T. Stanton	03/03

SAN DIEGO REGIONAL STANDARD DRAWING

MASONRY RETAINING WALL TYPE 1 (LEVEL BACKFILL)

RECOMMENDED BY THE SAN DIEGO REGIONAL STANDARDS COMMITTEE

T. Stanton 3/10/2003

Chairperson R.C.E. 19246 Date

DRAWING NUMBER C-1

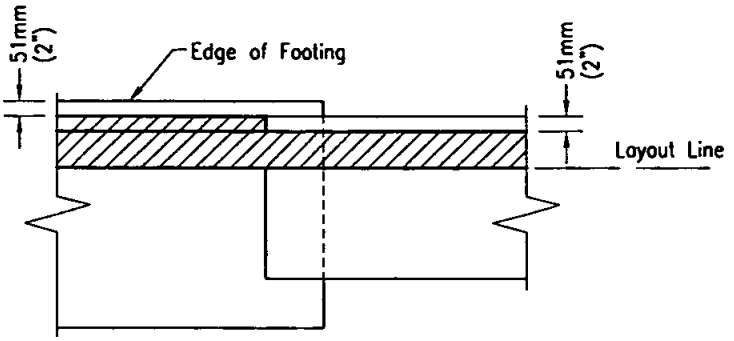

PLAN

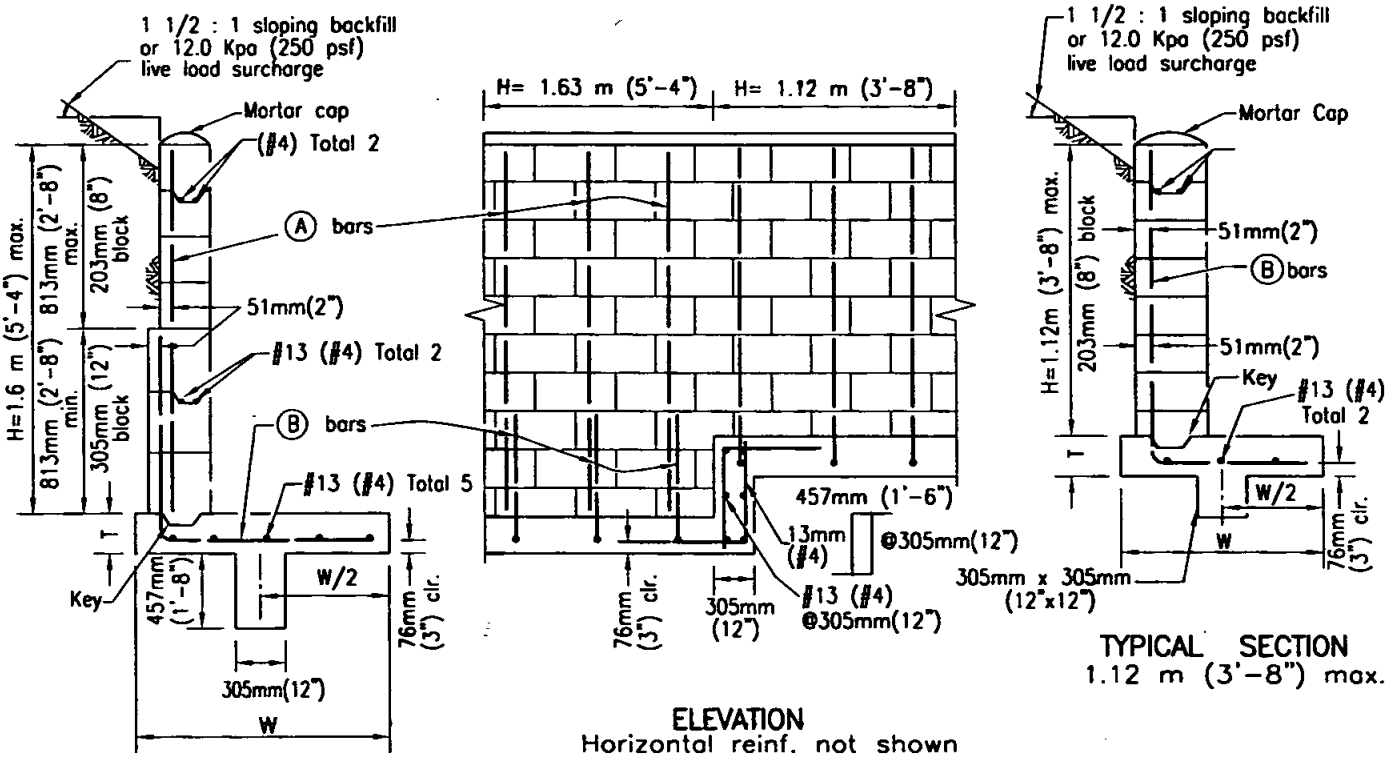

TYPICAL SECTION
over 1.12m (3'-8")

ELEVATION
Horizontal reinf. not shown

TYPICAL SECTION
1.12 m (3'-8") max.

DIMENSIONS AND REINFORCING STEEL		
H (max.)	1.63m (5'-4")	1.12m (3'-8")
T (min.)	254mm (0'-10")	254mm (0'-10")
W (min.)	1.52m (5'-0")	1.14m (3'-9")
Ⓐ Bars	#13@406mm (#4@16")	——
Ⓑ Bars	#19@406mm (#6@16")	#13@406mm (#4@16")
max. soil press.	33.5 Kpa (700psf)	26.3 Kpa (550psf)

NOTES:

1. See Standard Drawings C-7 and C-8 for additional notes and details.
2. Fill all block cells with grout.

Revision	By	Approved	Date
ORIGINAL		Kercheval	12/75
Add Metric		T. Stanton	03/03

SAN DIEGO REGIONAL STANDARD DRAWING

MANSONRY RETAINING WALL TYPE 2

(LIVE LOAD SURCHARGE OR SLOPING BACKFILL)

RECOMMENDED BY THE SAN DIEGO REGIONAL STANDARDS COMMITTEE

T. Stanton 3/10/2003

Chairperson R.C.E. 19246 Date

DRAWING NUMBER C-2

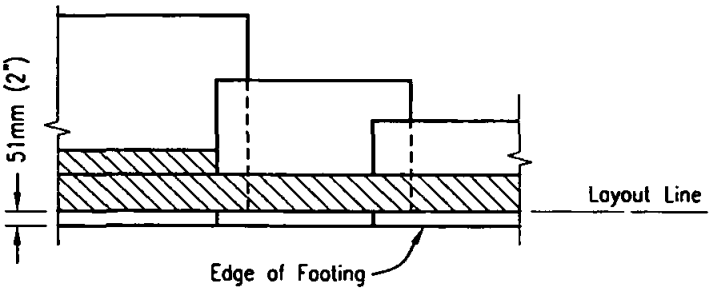

PLAN

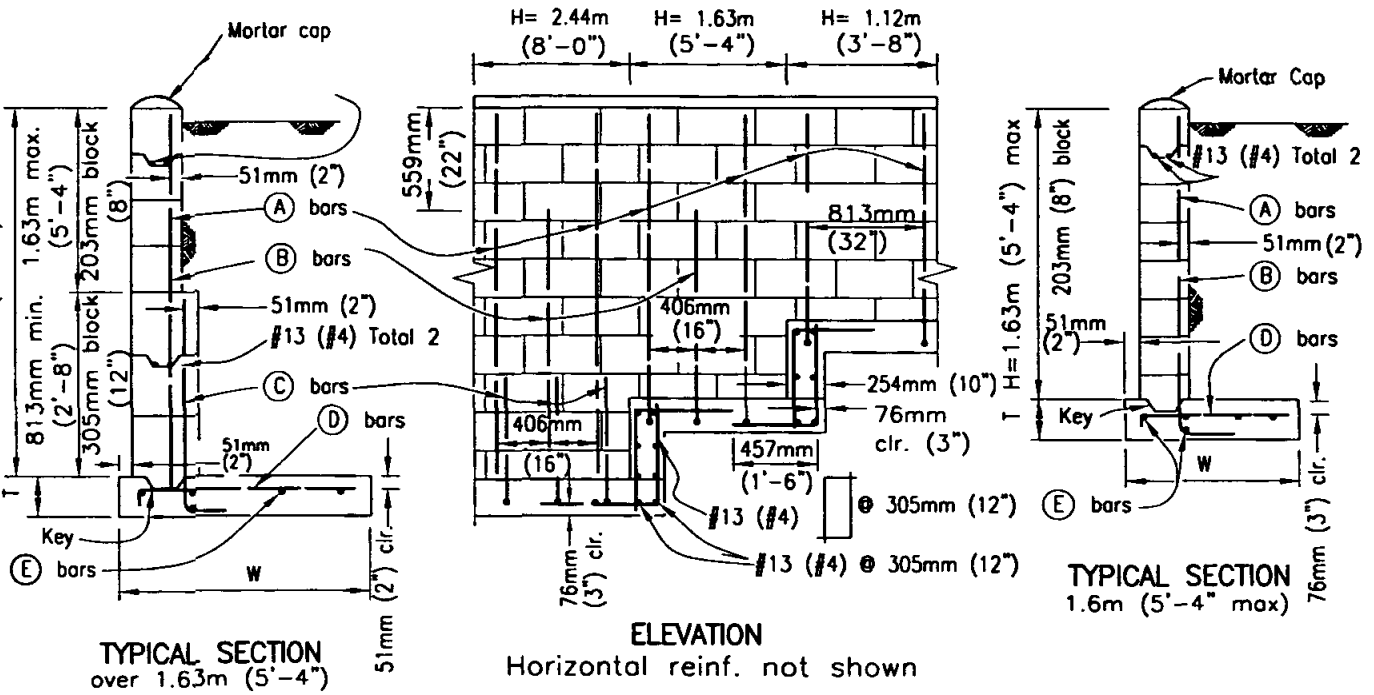

DIMENSIONS AND REINFORCING STEEL			
H (max)	1.12 m (3'-8")	1.63 m (5'-4")	2.44m (8'-0")
T (min)	203 mm (0'-8")	254 mm (0'-10")	305mm (1'-0")
W (min)	762 mm (2'-4")	965mm (3'-2")	1.45m (4'-9")
Ⓐ Bars	#13@813mm (#4@32")	#13@813mm (#4@32")	13mm@813mm (#4@32")
Ⓑ Bars	——	#13@813mm (#4@32")	13mm@813mm (#4@32")
Ⓒ Bars	——	——	406mm (#6@16")
Ⓓ Bars	#13@813mm (#4@32")	#13@406mm (#4@16")	406mm (#6@16")
Ⓔ Bars	#13 (#4) total 4	#13 (#4) total 5	13mm (#4) total 6
max soil press. (psf)	7.6 MPa (1100psi)	11.0 MPa (1600psi)	15.2 MPa (2200psi)

NOTES: 1. See Standard Drawings C-7 and C-8 for additional notes and details.
2. Fill all block cells with grout.

Revision	By	Approved	Date
ORIGINAL		Kercheval	12/75
Add Metric		T. Stanton	03/03

SAN DIEGO REGIONAL STANDARD DRAWING

MASONRY RETAINING WALL TYPE 3 (LEVEL BACKFILL)

RECOMMENDED BY THE SAN DIEGO REGIONAL STANDARDS COMMITTEE

T. Stanton 3/10/2003

Chairperson R.C.E. 19246 Date

DRAWING NUMBER C-3

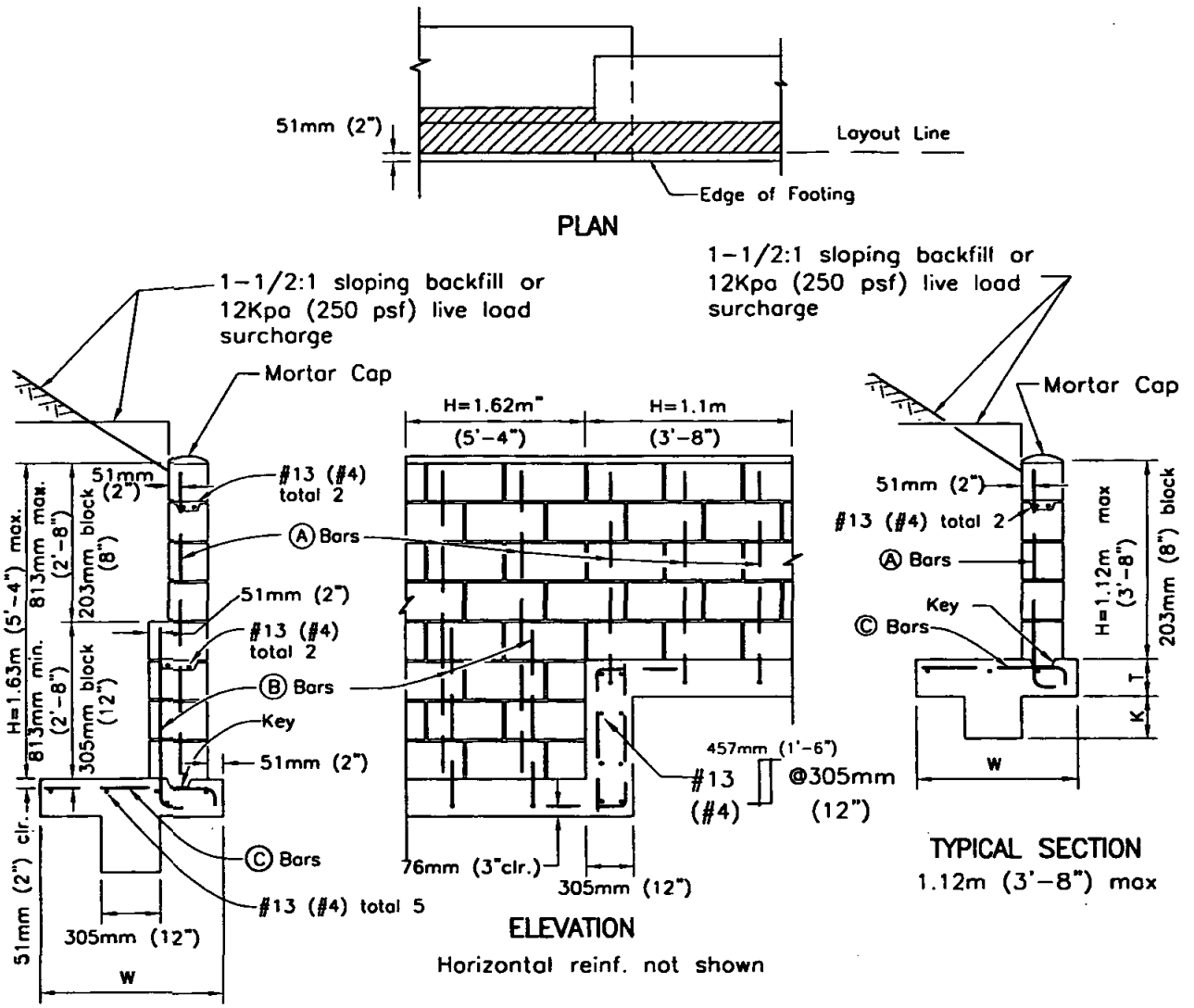

DIMENSIONS AND REINFORCING STEEL				
H (max)	1.63m (5'-4")		1.12m (3'-8")	
T (min)	254mm (0'-10")		203mm (0'-8")	
W (min)	1.22m (4'-0")		914mm (3'-0")	
Ⓐ Bars	#13(#4)@406mm(16")		#13 (#4)@406mm (16")	
Ⓑ Bars	#19(#6)@406mm(16")		——	
Surcharge	sloping	live load	sloping	live load
Ⓒ Bars	#19(#6)@203mm(8")	#19(#6)@406mm(16")	#19(#6)@406mm(16")	#19(#6)@403mm(16")
K (min)	305mm (1'-0")	203mm (0'-8")	305mm (1'-0")	203mm (0'-8")
Toe Press.	129.3 Kpa (2700 psf)	91 Kpa (1900 psf)	81.4 Kpa (1700 psf)	68.5 Kpa (1430 psf)

NOTES:

1. See Standard Drawings C-7 and C-8 for additional notes and details.
2. Fill all block cells with grout.

Revision	By	Approved	Date
ORIGINAL		Parkinson	02/95
Add Metric		T. Stanton	03/03
Reformatted		T. Stanton	04/06

SAN DIEGO REGIONAL STANDARD DRAWING

MASONRY RETAINING WALL TYPE 4

(LIVE LOAD SURCHARGE OR SLOPING BACKFILL)

RECOMMENDED BY THE SAN DIEGO REGIONAL STANDARDS COMMITTEE

T. Stanton 3/01/2003

Chairperson R.C.E. 19246 Date

DRAWING NUMBER C-4

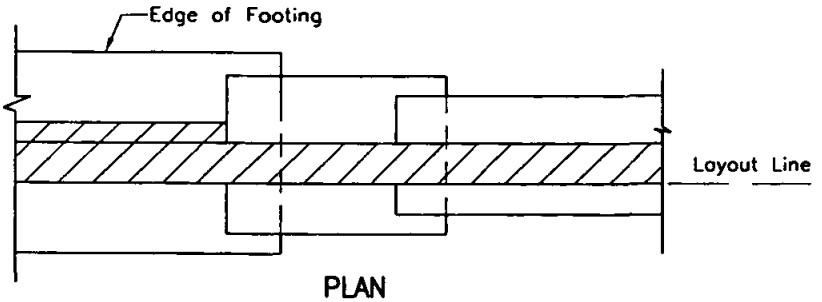

PLAN

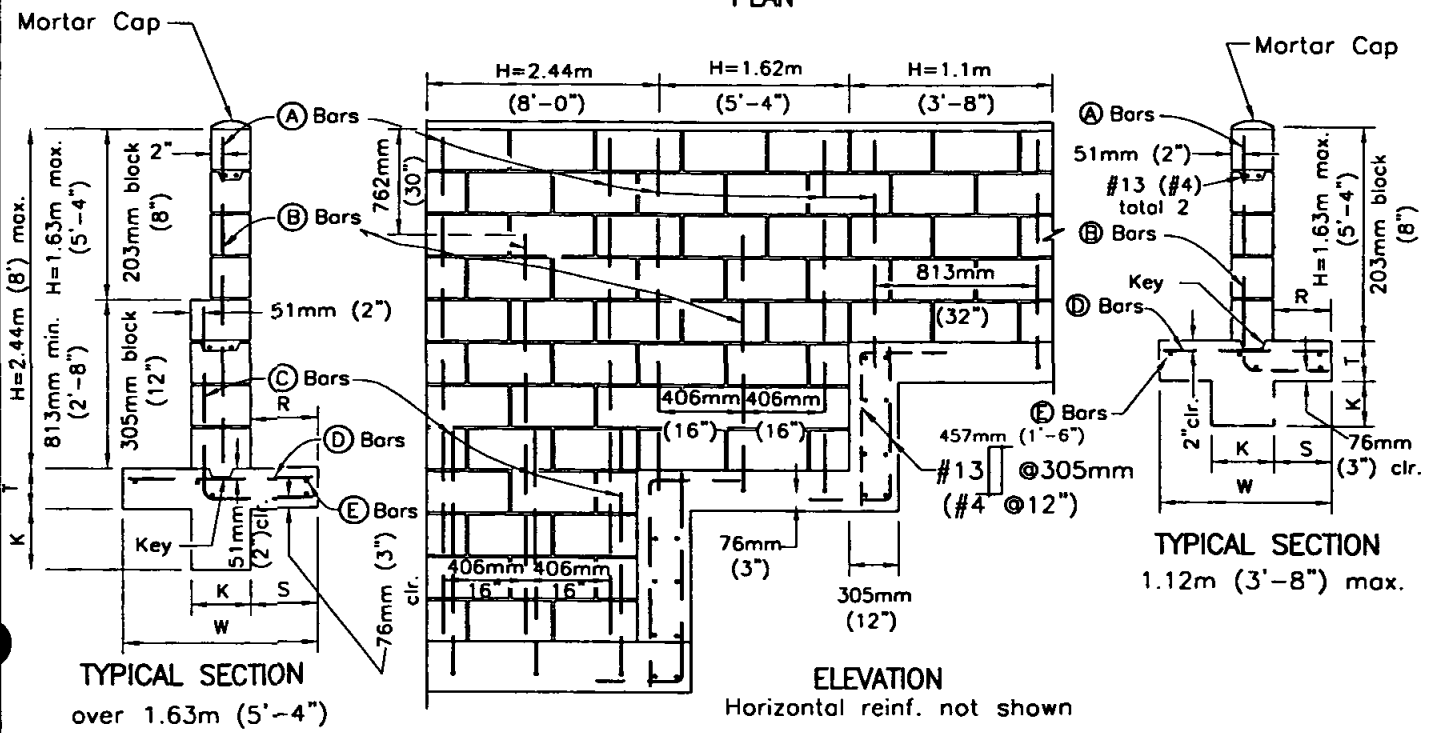

TYPICAL SECTION
over 1.63m (5'-4")

ELEVATION
Horizontal reinf. not shown

TYPICAL SECTION
1.12m (3'-8") max.

DIMENSIONS AND REINFORCING STEEL			
H (max)	1.12m (3'-8")	1.63m (5'-4")	2.44m (8'-0")
T (min)	203mm (0'-8")	254mm (0'-10")	305mm (1'-0")
W (min)	635mm (2'-1")	940mm (3'-1")	1.25m (4'-3")
R	229mm (0'-9")	356mm (1'-2")	432mm (1'-5")
S	216mm (0'-8 1/2")	318mm (1'-1/2")	495mm (1'-7 1/2")
K	203mm (0'-8")	203mm (0'-8")	305mm (1'-0")
Ⓐ Bars	#13(#4)@813mm(32")	#13(#4)@813mm(32")	#13(#4)@813mm(32")
Ⓑ Bars	——	#13(#4)@813mm(32")	#13(#4)@813mm(32")
Ⓒ Bars	——	——	#22(#7)@406mm(16")
Ⓓ Bars	#13(#4)@813mm(32")	#13(#4)@406mm(16")	#13(#4)@406mm(16")
Ⓔ Bars	#13(#4) total 5	#13(#4) total 5	#13(#4) total 6
Max. Toe Press.	37.1 Kpa (774 psf)	49.3 Kpa (1,030 psf)	79.5 Kpa (1,660psf)

NOTES:

1. See Standard Drawings C-7 and C-8 for additional notes and details.
2. Fill all block cells with grout.

Revision	By	Approved	Date
ORIGINAL		Parkinson	2/95
Add Metric		T. Stanton	03/03

SAN DIEGO REGIONAL STANDARD DRAWING

MASONRY RETAINING WALL TYPE 5 (LEVEL BACKFILL)

RECOMMENDED BY THE SAN DIEGO REGIONAL STANDARDS COMMITTEE

T. Stanton 3/10/2003

Chairperson R.C.E. 19246 Date

DRAWING NUMBER C-5

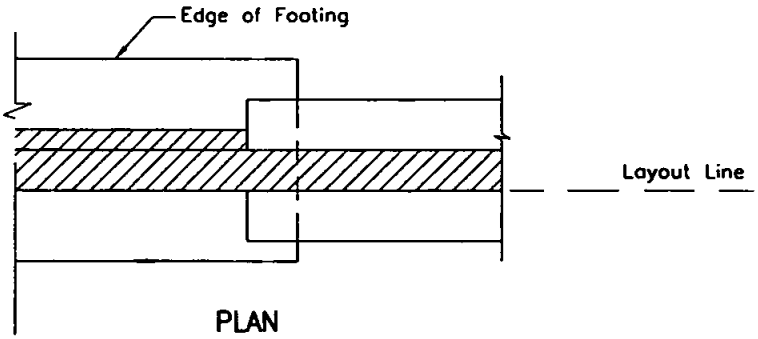

PLAN

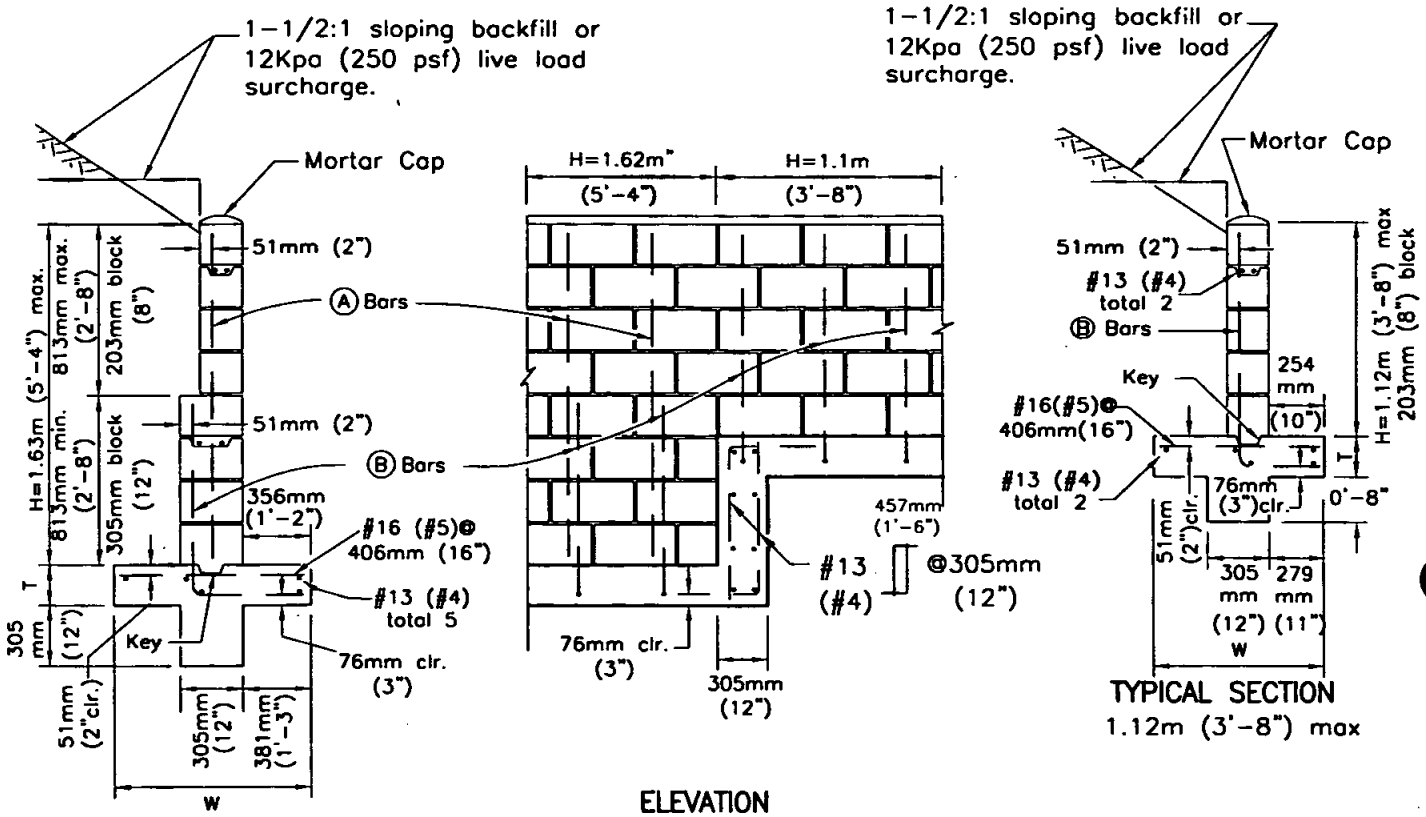

TYPICAL SECTION
over 1.12m (3'-8")

ELEVATION
Horizontal reinf. not shown

TYPICAL SECTION
1.12m (3'-8") max

DIMENSIONS AND REINFORCING STEEL		
H (max)	1.63m (5'-4")	1.12m (3'-8")
T (min)	254mm (0'-10")	203mm (0'-8")
W (min)	1.17m (3'-10")	838mm (2'-9")
Ⓐ Bars	#13(#4)@406mm(16")	——
Ⓑ Bars	#19(#6)@406mm(16")	#13(#4)@406mm(16")
Max. Toe Press.	95.8 Kpa (2,000 psf)	67.0 Kpa (1,400 psf)

NOTES:
1. See Standard Drawings C-7 and C-8 for additional notes and details.
2. Fill all block cells with grout.

Revision	By	Approved	Date
ORIGINAL		Parkinson	2/95
Add Metric		T. Stanton	03/03

SAN DIEGO REGIONAL STANDARD DRAWING

MASONRY REATAINING WALL TYPE 6
(LIVE LOAD SURCHARGE OR SLOPING BACKFILL)

RECOMMENDED BY THE SAN DIEGO REGIONAL STANDARDS COMMITTEE

T. Stanton 3/01/2003
Chairperson R.C.E. 19246 Date

DRAWING NUMBER C-6

DESIGN CONDITIONS:

Walls are to be used for the loading conditions shown for each type wall. Design H shall not be exceeded. Footing key is required except as shown otherwise or when found unnecessary by the Engineer. Special footing design is required where foundation material is incapable of supporting toe pressure listed in table.

DESIGN DATA:

Reinforced Concrete:

Fc=8.3 Mpa (1200 psi) F'c=20.7 Mpa (3000 psi)
Fs=138 Mpa (20,000 psi) n=10

Reinforced Masonry:

F'm=41.4 Mpa (600 psi) Fm=1.4 Mpa (200 psi)
Fs=138 Mpa (20,000 psi) n=50
Earth=1922 kg/cu m (120 pcf) and Equivalent Fluid Pressure=1.76 kg/sq m (36 psf) per 305mm (foot) of height.
Walls shown for 1 1/2:1 unlimited sloping surcharge are designed in accordance with Rankline's formula for unlimited sloping surcharge with a ø = 33° 13m(42').

REINFORCEMENT:

Intermediate grade, hard grade, or rail steel deformation shall conform ASTM A615, A616, A617. Bars shall lap 40 diameters, where spliced, unless otherwise shown on the plans. Bends shall conform to the Manual of Standard Practice, A.C.1. Backing for hooks is four diameters. All bar embedments are clear distances to outside of bar. Spacing for parallel bars is center to center bars.

MASONRY:

All reinforced masonry retaining walls be constructed of regular or light weight standard units conforming to the "Standard Specifications for Public Works Construction."

JOINTS:

Vertical control joints shall be placed at 9.75m (32') intervals maximum. Joints shall be designed to resist shear and other lateral forces while permitting longitudinal movement. Vertical expansion joints shall be placed at 29.3m (96') intervals maximum.

CONCRETE:

Footing concrete shall be 332 kg/M^3-C-22Mpa (560-C-3250), using Type B aggregate when placing conditions permit.

BACKFILL:

No backfill material shall be placed against masonry retaining walls until grout has reached design strength or until grout has cured for a minimum of 28 days. Compaction of backfill material by jetting or ponding with water will not be permitted. Each layer of backfill shall be moistened as directed by the Engineer and thoroughly tamped, rolled or otherwise compacted until the relative compacting is not less than 90%.

FENCING:

Safety fencing shall be installed at the top of the wall as required by the agency.

INSPECTIONS:

Call for inspections as follows:

A. When the footing has been formed, with the steel tied securely in final position, and is ready for the concrete to be placed.

B. Where cleanout holes are not provided:

(1) After the blocks have been laid up to a height of 1.22m (4') or full height for walls up to 1.52m (5'), with steel in place but before the grout is poured, and.....

(2) After the first lift is properly grouted, the blocks have been laid up to the top of the wall with the steel tied securely in place but before the upper lift is grouted.

Where cleanout holes are provided:

After the blocks have been laid up to the top of the wall, with the steel tied securely in place, but before grouting.

C. After grouting is complete and after rock or rubble wall drains are in place but before earth backfill is placed.

D. Final inspection when all work has been completed.

CONCRETE GROUT AND MORTAR MIXES:

Concrete grout shall attain a minimum compressive strength of 13.8 Mpa (2,000 psi) in 28 days and mortar shall attain 12.4 Mpa (1,800) psi in 28 days. All cells shall be filled with grout. Rod or vibrate consolidation. Bring grout within 10 minutes of pouring to insure grout to a point 51mm (2") from the top of masonry units when grouting of second lift is to be continued at another time.

MORTAR KEY:

To insure proper bonding between the footing and the first course of block, a mortar key shall be formed by embedding a flat 2 x 4 flush with and at the top of the freshly poured footing. The 2 x 4 should be removed after the concrete has started to harden (approximately 1 hour).
A mortar key may be omitted if the first course of block is set into the fresh concrete when the footing is poured, and a good bond is obtained.

WALL DRAINS:

Wall drains shall be provided in accordance with Standard Drawing C-8.

SOIL:

All footings shall extend at least 305mm (12") into undisturbed natural soil or approved compacted fill. Soil should be dampened prior to placing concrete in footings.

Revision	By	Approved	Date
ORIGINAL		A. Kercheval	12/75
Add Metric		T. Stanton	03/03

SAN DIEGO REGIONAL STANDARD DRAWING

GENERAL NOTES FOR MASONRY RETAINING WALLS

RECOMMENDED BY THE SAN DIEGO REGIONAL STANDARDS COMMITTEE

3/10/2003

Chairperson R.C.E. 19246 Date

DRAWING NUMBER **C-7**

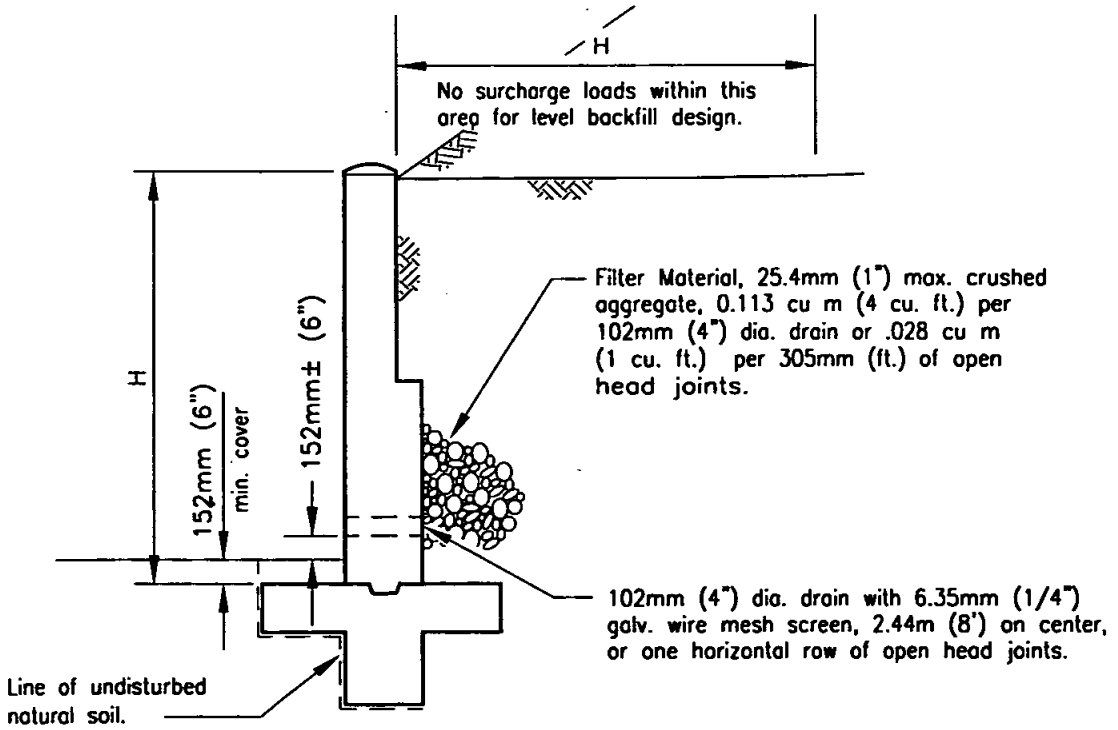

TYPICAL SECTION

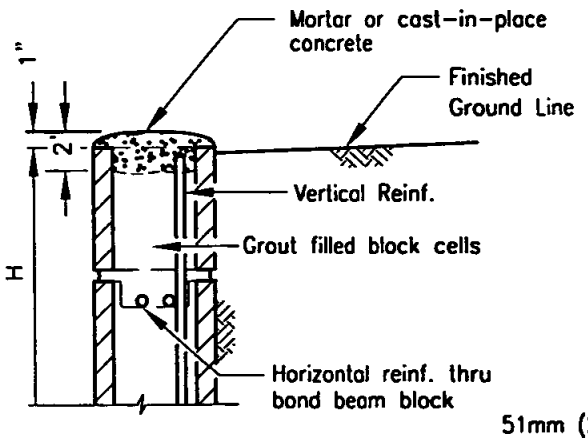

CAP DETAIL

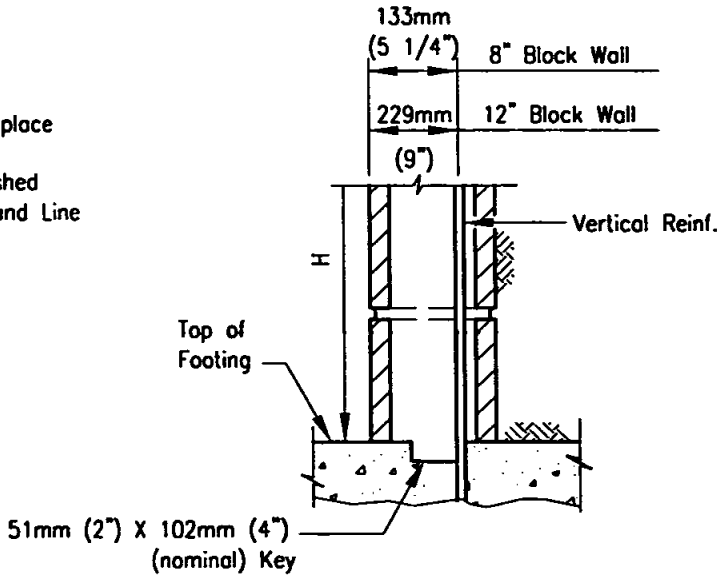

KEY DETAIL

NOTES:

1. All masonry retaining walls shall be constructed with cap, key and drainage details as shown hereon.
2. 102mm (4") diameter drain may be formed by placing a block on it's side.

Revision	By	Approved	Date
ORIGINAL		Kercheval	12/75
Add Metric		T. Stanton	03/03

SAN DIEGO REGIONAL STANDARD DRAWING

DETAILS FOR MASONRY RETAINING WALL

RECOMMENDED BY THE SAN DIEGO REGIONAL STANDARDS COMMITTEE

T. Stanton 3/10/2003

Chairperson R.C.E. 19246 Date

DRAWING NUMBER C-8

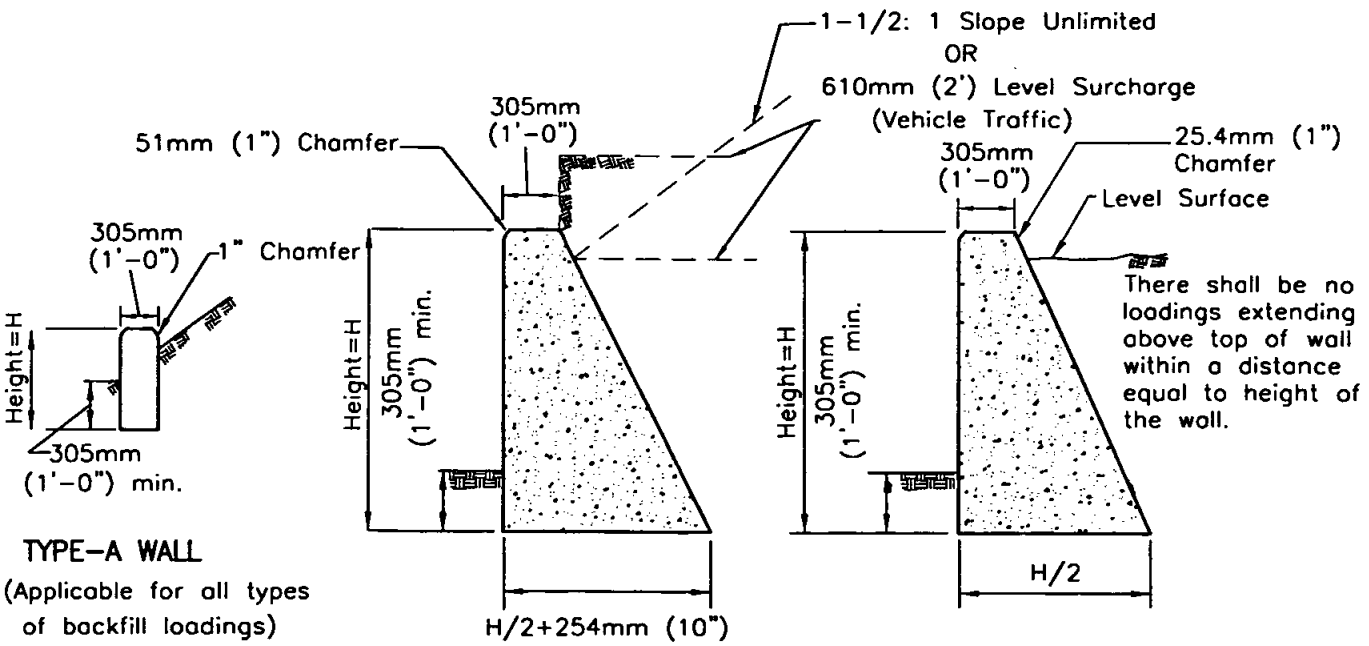

TYPE-A WALL
(Applicable for all types of backfill loadings)

TYPE-B WALL

TYPE-C WALL

Expansion joint @ 9.14m (30'-0")± centers (max) and/or @ each step.

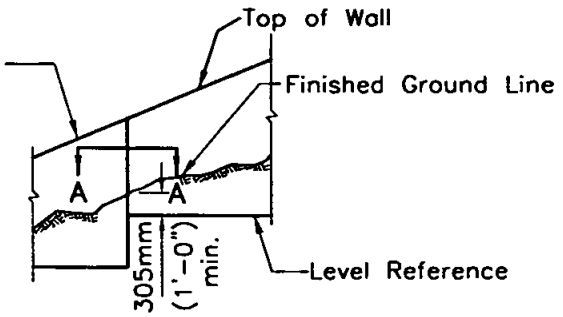

ELEVATION

WALL TYPE	HEIGHT	BASE	CONCRETE CU M - CF/FT
A	457mm (1'-6")	305mm (1'-0")	.042 cu m (1.50 cu ft.)
	610mm (2'-0")	305mm (1'-0")	.057 cu m (2.00 cu ft.)
B	914mm (3'-0")	711mm (2'-4")	1.41 cu m (4.99 cu ft.)
	1.22m (4'-0")	864mm (2'-10")	.217 cu m (7.66 cu ft.)
	1.52m (5'-0")	1.02m (3'-4")	.306 cu m (10.82 cu ft.)
	1.83m (6'-0")	1.17m (3'-10")	.410 cu m (14.49 cu ft.)
C	914mm (3'-0")	457mm (1'-6")	.106 cu m (3.75 cu ft.)
	1.22m (4'-0")	610mm (2'-0")	.170 cu m (6.00 cu ft.)
	1.52m (5'-0")	762mm (2'-6")	.248 cu m (8.75 cu ft.)
	1.83m (6'-0")	914mm (3'-0")	.340 cu m (12.00 cu ft.)

NOTE:
See Standard Drawings C-10 for Section A-A, notes and details.

Revision	By	Approved	Date
ORIGINAL		Kercheval	12/75
Add Metric		T. Stanton	03/03

SAN DIEGO REGIONAL STANDARD DRAWING

GRAVITY RETAINING WALLS

RECOMMENDED BY THE SAN DIEGO REGIONAL STANDARDS COMMITTEE

T. Stanton 3/10/2003

Chairperson R.C.E. 19246 Date

DRAWING NUMBER **C-9**

CONCRETE

Concrete shall be 332 kg/M^3 -C-22Mpa (560-C-3250)

DESIGN CONDITIONS

Walls are to be used for the loading conditions shown for each type wall. Design H may be xceeded by six inches before going to next size.

DESIGN DATA

Fc = 8.3 Mpa (1200 psi)
F'c = 20.7 Mpa (3000 psi)
Earth = 1922 kg/cu m (120 pcf)
and equivalent fluid pressure = 176 kg/sq m (36 psf) per 305mm (foot) of height

Walls shown for 1-1/2:1 unlimited sloping sucharge are designed in accordance with Rankine's Formula for unlimited sloping surcharge with ø = 33° 13m (42').
Note: Maximum toe pressure under wall footing = 143.6 Kpa (1-1/2 tons/sq. ft.). Special design required where footing material is incapable of supporting this pressure.

EXCAVATION AND BACKFILL

Compaction of backfill material by jetting or ponding with water will not be permitted.

Each layer of backfill shall be moistened as directed by the Engineer and thoroughly tamped, rolled or otherwise compacted until the relative compaction is not less than 90 percent.

No backfill material shall be deposited against concrete retaining walls until the concrete has developed a strength of 17 Mpa (2,500 psi) in compression as determined by test cylinders, or until 28 days after wall has been placed.

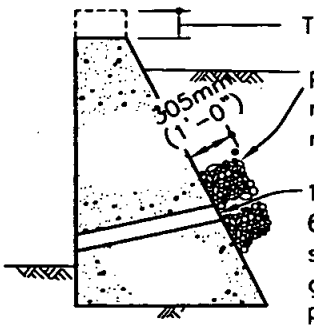

Top extension if specified

Filler Material: 25.4mm (1") max. crushed aggregate .113 cu m (4 cu. ft.) min at each drain.

102mm (4") dia. drains with 6.35mm (1/4") galv. wire mesh screen, 203mm (8") above outside ground surface, slope 13mm (1/2") per ft. Locate drains @ 4.6m (15'-0") center to center or as directed by the Engineer.

TYPICAL DRAINAGE

WHEN H IS GREATER THAN 1.22m (4'-0")

13mm (1/2") Expansion joint, fill with premolded expansion joint filler. Locate joints at approx. 9.14m (30'-0") centers or as directed by the Engineer.

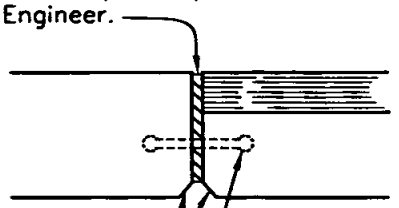

13mm (1/2") chamfer

Water stop, use only when watertight joint is required, see water stop detail.

SECTION A-A

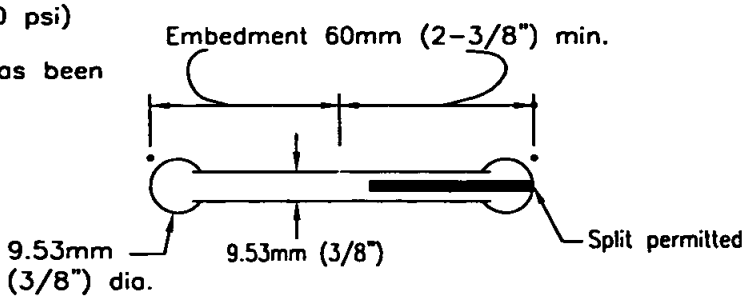

RUBBER WATERSTOP

Use only when watertight joint is required.

Revision	By	Approved	Date
ORIGINAL		Kercheval	12/75
Add Metric		T. Stanton	03/03

SAN DIEGO REGIONAL STANDARD DRAWING

GENERAL NOTES AND DETAILS FOR GRAVITY RETAINING WALLS

RECOMMENDED BY THE SAN DIEGO REGIONAL STANDARDS COMMITTEE

T. Stanton 3/10/2003

Chairperson R.C.E. 19246 Date

DRAWING NUMBER C-10

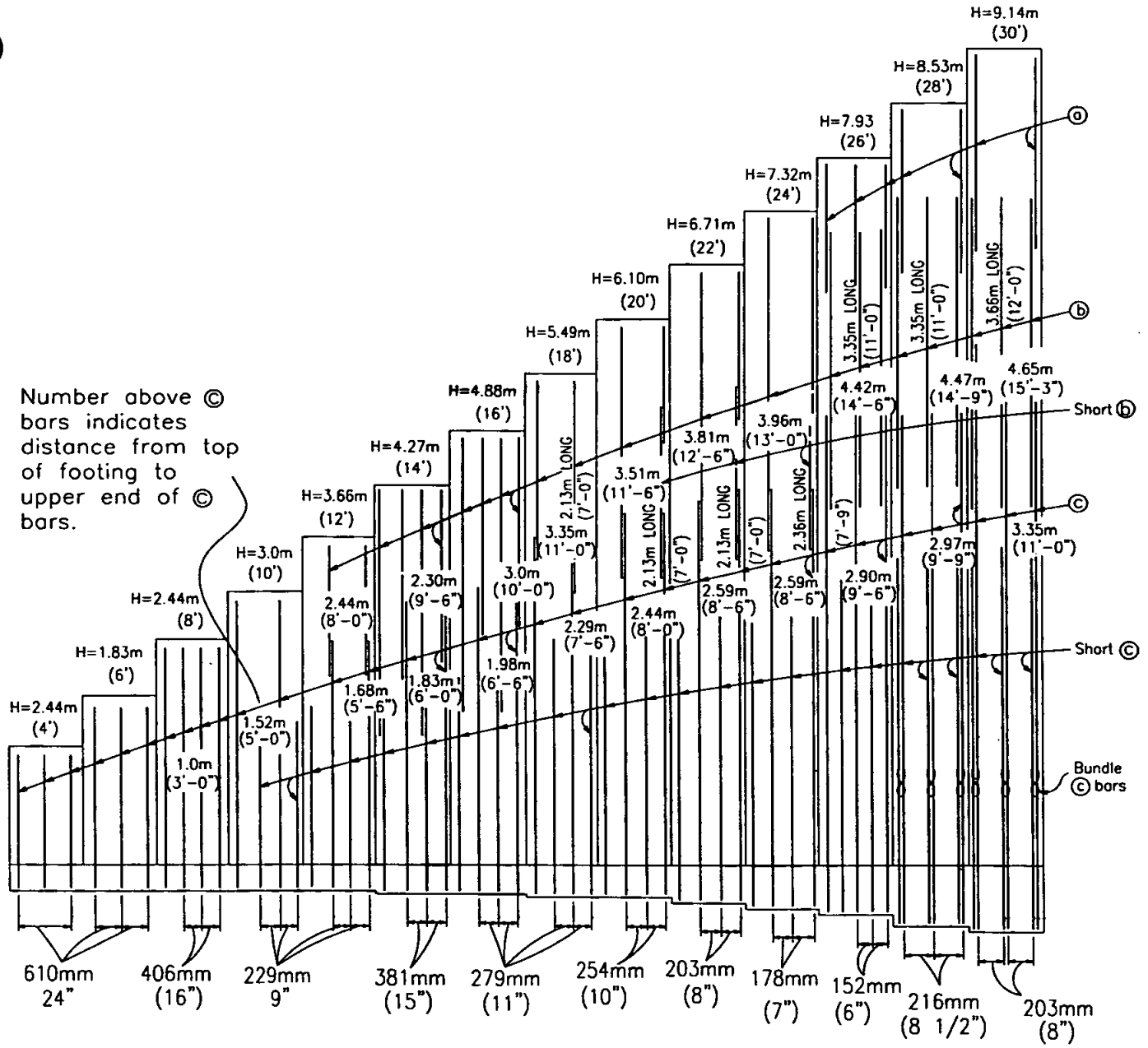

ELEVATION

NOTES:
1. For SPREAD FOOTING SECTION see C-11B
2. For TYPICAL LAYOUT EXAMPLE see C-11C
3. For 45T PILE FOOTING SECTION see C-11C
4. For TABLE OF REINFORCING STEEL DIMENSIONS AND DATA see C-11D

Revision	By	Approved	Date
ORIGINAL		Kercheval	12/75
Add Metric		T. Stanton	03/03

SAN DIEGO REGIONAL STANDARD DRAWING

REINFORCED CONCRETE RETAINING WALL TYPE 1

RECOMMENDED BY THE SAN DIEGO REGIONAL STANDARDS COMMITTEE

T. Stanton 3/10/2003

Chairperson R.C.E. 19246 Date

DRAWING NUMBER C-11A

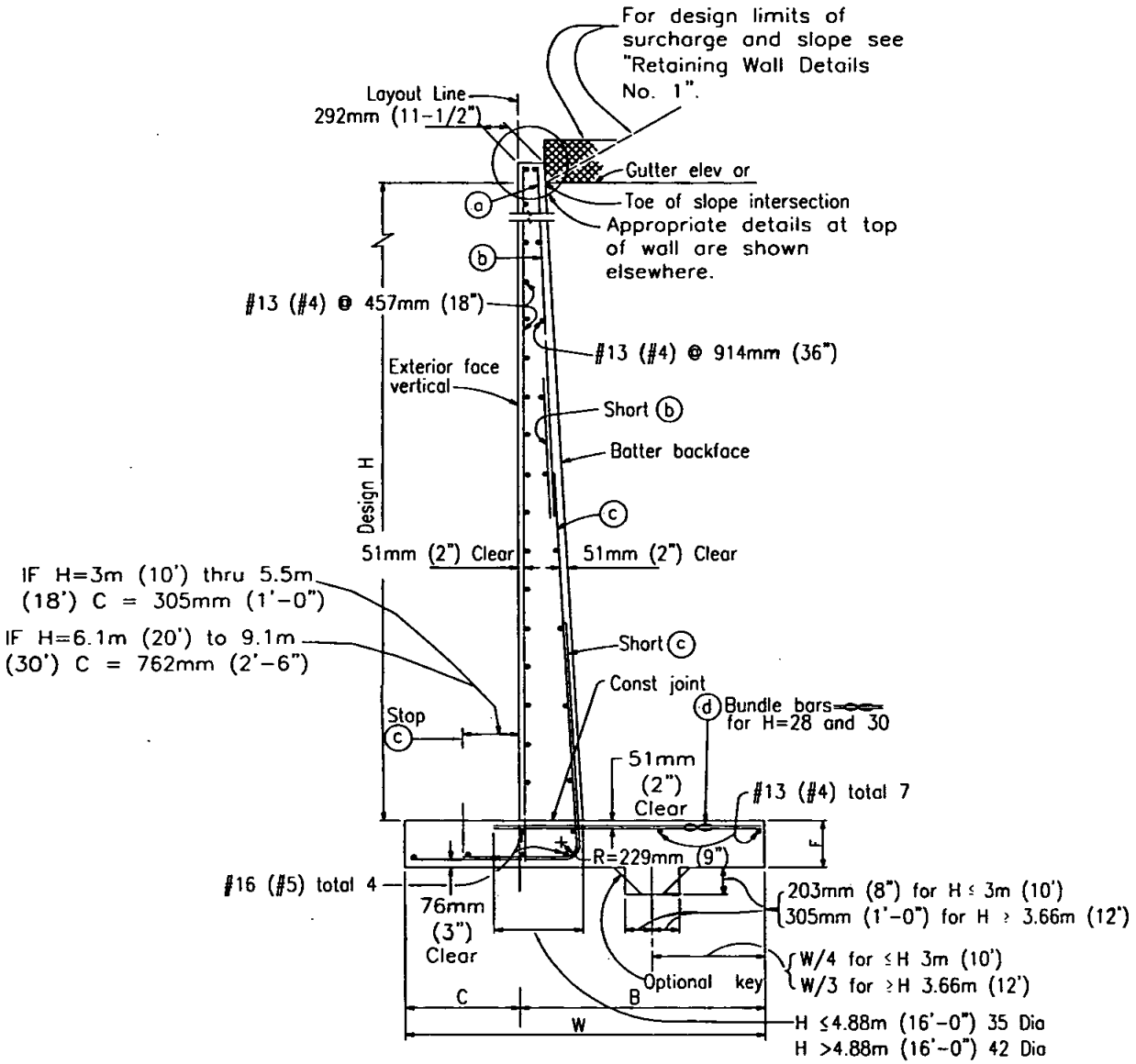

SPREAD FOOTING SECTION

NOTES:

1. For details not shown and drainage notes see "Retaining Wall Details No.1." Standard Drawing C-13.
2. Quantities apply to Design H portion and exclude the added portion above "Gutter Elevation".

Revision	By	Approved	Date
ORIGINAL		Kercheval	12/75
Add Metric		T. Stanton	03/03

SAN DIEGO REGIONAL STANDARD DRAWING

REINFORCED CONCRETE RETAINING WALL TYPE 1

RECOMMENDED BY THE SAN DIEGO REGIONAL STANDARDS COMMITTEE

T. Stanton 3/10/2003

Chairperson R.C.E. 19246 Date

DRAWING NUMBER **C-11B**

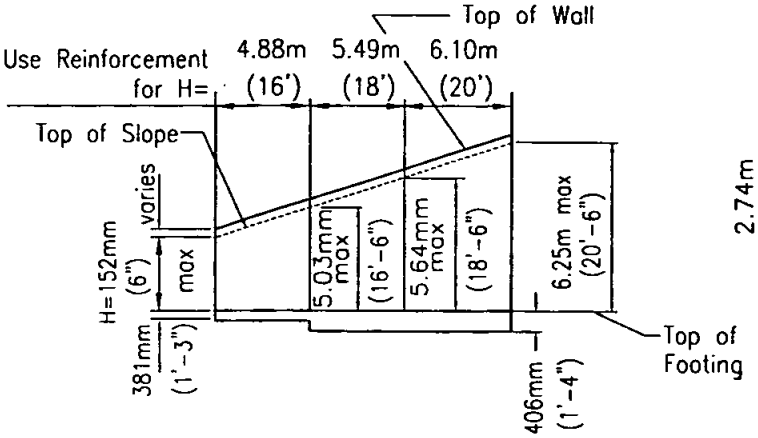

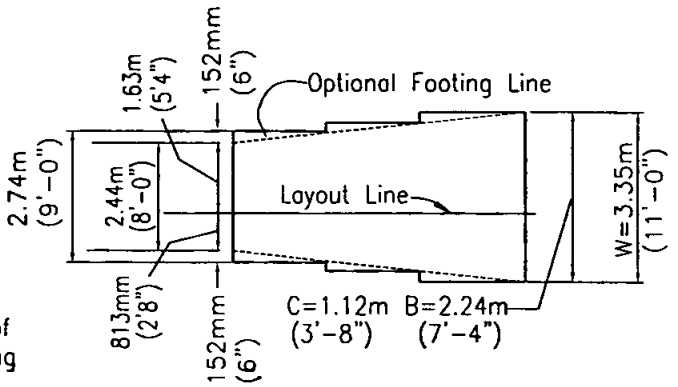

TYPICAL LAYOUT EXAMPLE

For joints required, see Details 3-3 and 3-4, drawing C-15

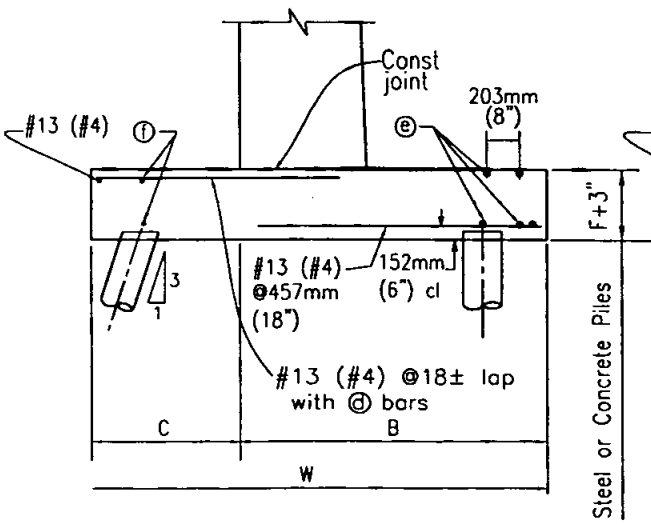

45T PILE FOOTING SECTION

H=7.32m (24') Thru H=9.14m (30')

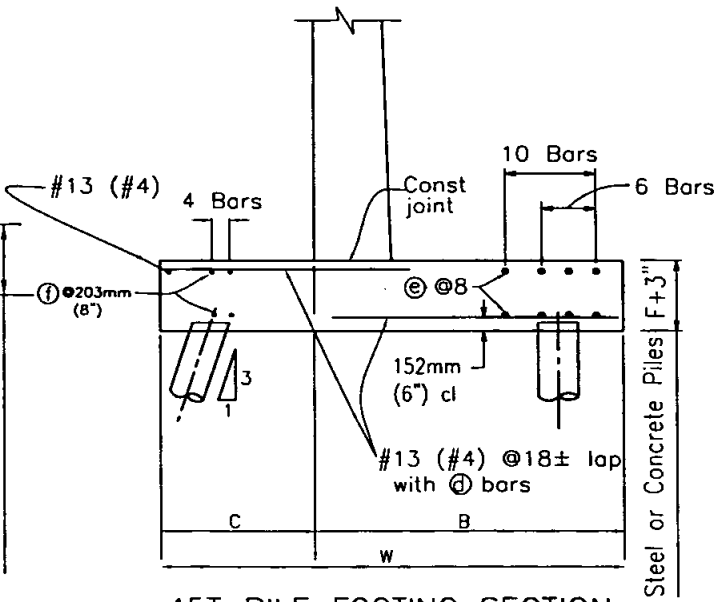

45T PILE FOOTING SECTION

H=1.22m (4') Thru H=6.71m (22')

Revision	By	Approved	Date
ORIGINAL		Kercheval	12/75
Add Metric		T. Stanton	03/03

SAN DIEGO REGIONAL STANDARD DRAWING

REINFORCED CONCRETE RETAINING WALL TYPE 1

RECOMMENDED BY THE SAN DIEGO REGIONAL STANDARDS COMMITTEE

T. Stanton 3/10/2003

Chairperson R.C.E. 19246 Date

DRAWING NUMBER **C-11C**

Revision	By	Approved	Date
ORIGINAL		Kercheval	12/73
Add Metric	T. Stanton		03/03

TABLE OF REINFORCING STEEL DIMENSIONS AND DATA

Design H			4'	6'	8'	10'	12'	14'	16'	18'	20'	22'	24'	26'	28'	30'
W		Metric	965mm	1.27m	1.58m	1.88m	2.18m	2.44m	2.74m	3.0 m	3.35m	3.66m	4.04m	4.34m	4.65m	5.10m
		U.S.	3'-2"	4'-2"	5'-2"	6'-2"	7'-2"	8'-0"	9'-0"	10'-0"	11'-0"	12'-0"	13'-3"	14'-3"	15'-3"	16'-9"
C		Metric	305mm	406mm	508mm	610mm	711mm	813mm	1.0 m	1.02m	1.12m	1.22m	1.35m	1.45m	1.55m	1.65m
		U.S.	1'-0"	1'-4"	1'-8"	2'-0"	2'-4"	2'-8"	3'-0"	3'-4"	3'-8"	4'-0"	4'-5"	4'-9"	5'-1"	5'-5"
B		Metric	660mm	864mm	1.07m	1.27m	1.47m	1.63m	1.83m	2.03m	2.24m	2.44m	2.69m	2.90m	3.10m	3.45m
		U.S.	2'-2"	2'-10"	3'-6"	4'-2"	4'-10"	5'-4"	6'-0"	6'-8"	7'-4"	8'-0"	8'-10"	9'-6"	10'-2"	11'-4"
F Spread Ftg.		Metric	356mm	356mm	356mm	356mm	356mm	381mm	381mm	406mm	406mm	457mm	508mm	584mm	660mm	711mm
		U.S.	1'-2"	1'-2"	1'-2"	1'-2"	1'-2"	1'-3"	1'-3"	1'-4"	1'-4"	1'-6"	1'-8"	1'-11"	2'-2"	2'-4"
Batter			1/2:12	1/2:12	1/2:12	1/2:12	1/2:12	1/2:12	1/2:12	1/2:12	1/2:12	1/2:12	5/8:12	3/4:12	3/4:12	7/8:12
ⓐbars		Metric	—	—	—	—	—	—	—	—	—	—	—	#13@ 610mm	#19@ 432mm	#19@ 406mm
		U.S.	—	—	—	—	—	—	—	—	—	—	—	#6@24	#6@17	#6@16
ⓑbars		Metric	—	—	—	—	#13@ 457mm	#19@ 762mm	#19@ 559mm	#22@ 559mm	#25@ 508mm	#25@ 406mm	#25@ 356mm	#25@ 305mm	#25@ 13mm	#25@ 203mm
		U.S.	—	—	—	—	#4@18	#6@30	#6@22	#7@22	#8@20	#8@16	#8@14	#8@12	#8@8-1/2	#8@8
ⓒbars		Metric	#16@ 610mm	#16@ 610mm	#16@ 406mm	#16@ 229mm	#19@ 229mm	#29@ 381mm	#29@ 279mm	#32@ 279mm	#36@ 254mm	#36@ 203mm	#36@ 176mm	#36@ 152mm	#32@ 216mm ℄	#32@ 203mm ℄
		U.S.	#5@24	#5@24	#5@16	#5@9	#6@9	#9@15	#9@11	#10@11	#11@10	#11@8	#11@7	#11@6	#10@8-1/2℄	#10@8 ℄
ⓓbars		Metric	#16@ 610mm	#16@ 610mm	#13@ 406mm	#13@ 229mm	#16@ 229mm	#25@ 381mm	#25@ 279mm	#32@ 279mm	#32@ 279mm	#32@ 203mm	#32@ 178mm	#32@ 152mm	#29@ 216mm ℄	#29@ 203mm ℄
		U.S.	#5@24	#5@24	#4@16	#4@9	#5@9	#8@15	#8@11	#10@11	#10@11	#10@8	#10@7	#10@6	#9@8-1/2℄	#9@8 ℄
Total ⓔ bars		Metric	6-#19	6-#19	10-#22	10-#22	10-#22	10-#22	6-#22	6-#22	6-#22	6-#22	4-#22	4-#22	4-#22	4-#22
		U.S.	6-#6	6-#6	10-#7	10-#7	10-#7	10-#7	6-#7	6-#7	6-#7	6-#7	4-#7	4-#7	4-#7	4-#7
Total ⓕ bars		Metric				4-#22	4-#22	4-#22	4-#22	4-#22	4-#22	4-#22	2-#22	2-#22	2-#22	2-#22
		U.S.				4-#7	4-#7	4-#7	4-#7	4-#7	4-#7	4-#7	2-#7	2-#7	2-#7	2-#7
2' Level surcharge	Toe Pressure	Metric	77Kpa	91Kpa	105Kpa	110Kpa	134Kpa	158Kpa	168Kpa	191Kpa	206Kpa	220Kpa	235Kpa	254Kpa	273Kpa	297Kpa
		U.S.	1.6k/sf	1.9k/sf	2.2k/sf	2.3k/sf	2.8k/sf	3.3k/sf	3.5k/sf	4.0k/sf	4.3k/sf	4.6k/sf	4.9k/sf	5.3k/sf	5.7k/sf	6.2k/sf
2:1 unlimited slope	Toe Pressure	Metric	53Kpa	72Kpa	96Kpa	120Kpa	129Kpa	158Kpa	172Kpa	201Kpa	225Kpa	263Kpa	282Kpa	311Kpa	340Kpa	359Kpa
		U.S.	1.1k/sf	1.5k/sf	2.0k/sf	2.5k/sf	2.7k/sf	3.3k/sf	3.6k/sf	4.2k/sf	4.7k/sf	5.5k/sf	5.9k/sf	6.5k/sf	7.1k/sf	7.5k/sf
1-1/2:1 limited slope	Toe Pressure	Metric	62Kpa	81Kpa	101Kpa	120Kpa	139Kpa	163Kpa	182Kpa	206Kpa	230Kpa	259Kpa	278Kpa	311Kpa	345Kpa	359Kpa
		U.S.	1.3k/sf	1.7k/sf	2.1k/sf	2.5k/sf	2.9k/sf	3.4k/sf	3.8k/sf	4.3k/sf	4.8k/sf	5.4k/sf	5.8k/sf	6.5k/sf	7.2k/sf	7.5k/sf
Spread Footing	Steel kg/ft.	Metric	7.7kg	9.1kg	12.7kg	16.8kg	23kg	36.3kg	47.6kg	66.7kg	84.8kg	112kg	137kg	185kg	204kg	230kg
	Steel lbs/ft.	U.S.	17lb.	20lb.	28lb.	37lb.	51lb.	80lb.	105lb.	147lb.	187lb.	246lb.	303lb.	407lb.	449lb.	507lb.
	Conc cu m	Metric	.26cu m	.36cu m	.47cu m	.58cu m	.72cu m	.86cu m	1.0cu m	1.2cu m	1.3cu m	1.5cu m	1.8cu m	2.9cu m	2.5cu m	3.0cu m
	Conc cf/ft	U.S.	8.9cu ft	12.5cu ft	16.3cu ft	20.2cu ft	25.4cu ft	30.1cu ft	34.6cu ft	40.1cu ft	45.0cu ft	52.1cu ft	63.3cu ft	77.0cu ft	88.1cu ft	104.8cu ft
Pile ftg.	Steel kg/ft.	Metric	13.2kg	14.5kg	18.6kg	31.8kg	38.1kg	51.3kg	63.5kg	78.0kg	96.2kg	122kg	146kg	194kg	213kg	240kg
	Steel lbs/ft.	U.S.	29lb.	32lb.	41lb.	70lb.	84lb.	113lb.	140lb.	172lb.	212lb.	270lb.	322lb.	427lb.	469lb.	528lb.
	Conc cu m	Metric	.30cu m	.34cu m	.48cu m	.59cu m	.72cu m	.86cu m	.99cu m	1.1cu m	1.3cu m	1.2cu m	1.8cu m	2.3cu m	2.6cu m	3.0cu m
	Conc cf/ft	U.S.	10.2cu ft	12.7cu ft	16.7cu ft	20.8cu ft	25.2cu ft	30.1cu ft	34.8cu ft	40.6cu ft	45.7cu ft	53.1cu ft	64.7cu ft	78.6cu ft	89.9cu ft	107.0cu ft

Note: Reinforcement detailed is to be placed in addition to that shown for spread footing. All piles not shown, see Pile Layout on plans. For pile footing Design H=4' use same footing dimensions as Design H=6'

℄ Denotes a bundle of 2 bars

SAN DIEGO REGIONAL STANDARD DRAWING

REINFORCED CONCRETE RETAINING WALL

TYPE 1

RECOMMENDED BY THE SAN DIEGO REGIONAL STANDARDS COMMITTEE

Chairperson R.C.E. 19246 Date 3/10/2003

DRAWING NUMBER C-11D

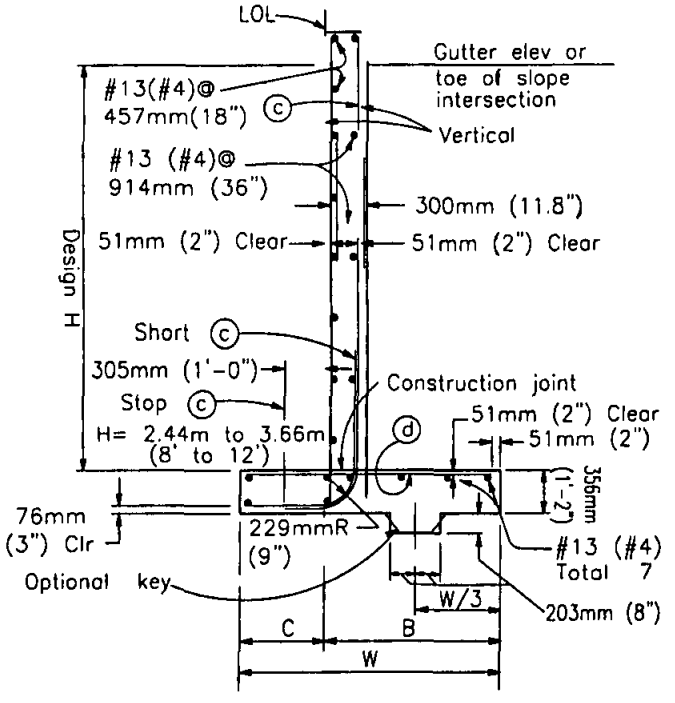

SPREAD FOOTING SECTION

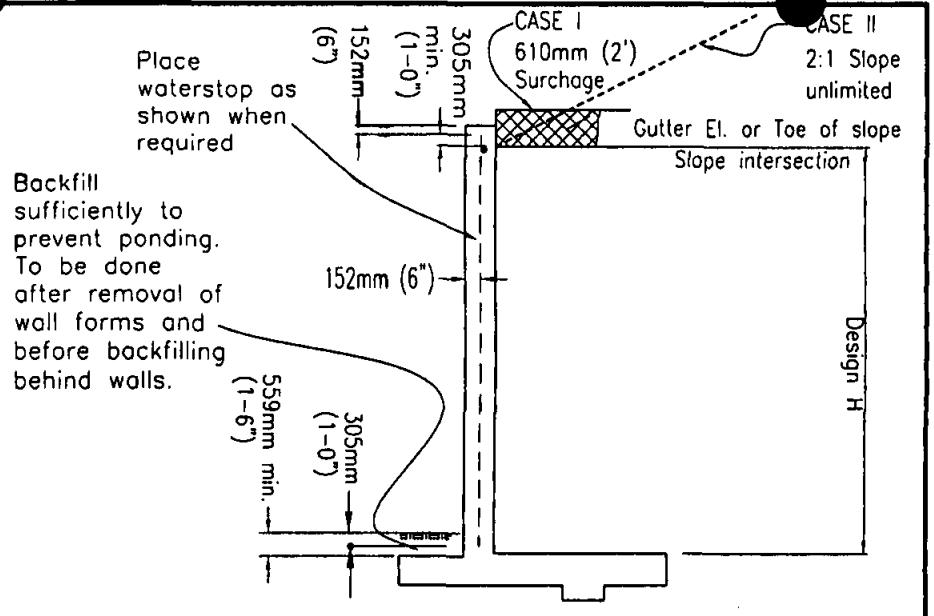

DESIGN

For drainage notes and other details, see "Retaining Wall Details No.1" Drawing C-13

Place concrete in toe against undisturbed material, except as permitted by the Engineer.

NOTES:
Design H may be exceeded by 152mm (6") before going to the next size.
Footing key is required except when found unnecessary by Engineer.
Special footing design is required where foundation material is incapable of supporting toe pressure loads listed in table.

Design Data:
fc = 8.96 Mpa (1300 psi) f'c=22.4 Mpa (3250 psi) fs=165 Mpa (24,000 psi) n= 10 earth 5.75 Kpa (120 pcf)

Case I – Equivalent fluid pressure= 1.7 Kpa (36 psf) max for determination of toe pressure. 1.3 Kpa (27) psf min for determination of heel pressure.

Case II – Earth pressure determined from Rankine's formula with 0 = 33°-12.8m (42').

NOTE:
Reinforcement detailed is to be placed in addition to that shown for spread footing. All piles not shown. see Pile Layout on plans. * For pile footing Design H=1.22m (4') use same footing dimensions as Design H=1.83m (6').

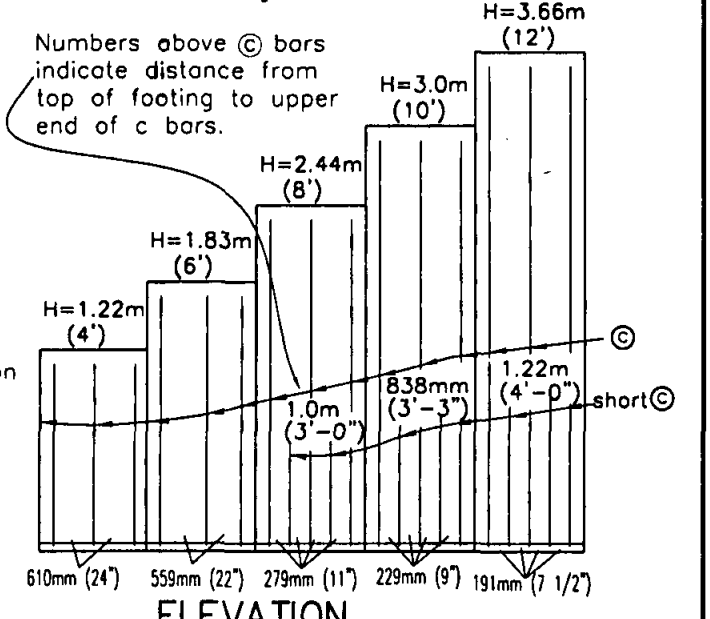

ELEVATION

Revision	By	Approved	Date
ORIGINAL			
Add Metric	T. Stanton	Kercheval	12/75 03/03

SAN DIEGO REGIONAL STANDARD DRAWING

REINFORCED CONCRETE RETAINING WALL TYPE 1A

RECOMMENDED BY THE SAN DIEGO REGIONAL STANDARDS COMMITTEE

Chairperson R.C.E. 19246 Date 3/10/2003

DRAWING NUMBER C-12A

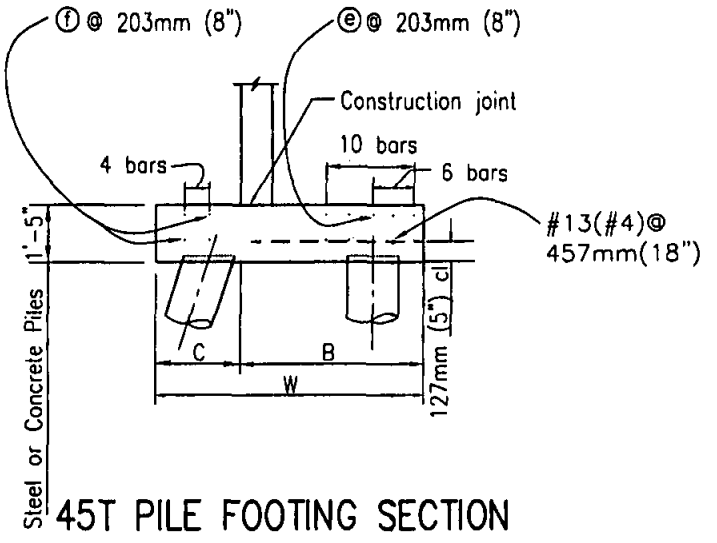

45T PILE FOOTING SECTION

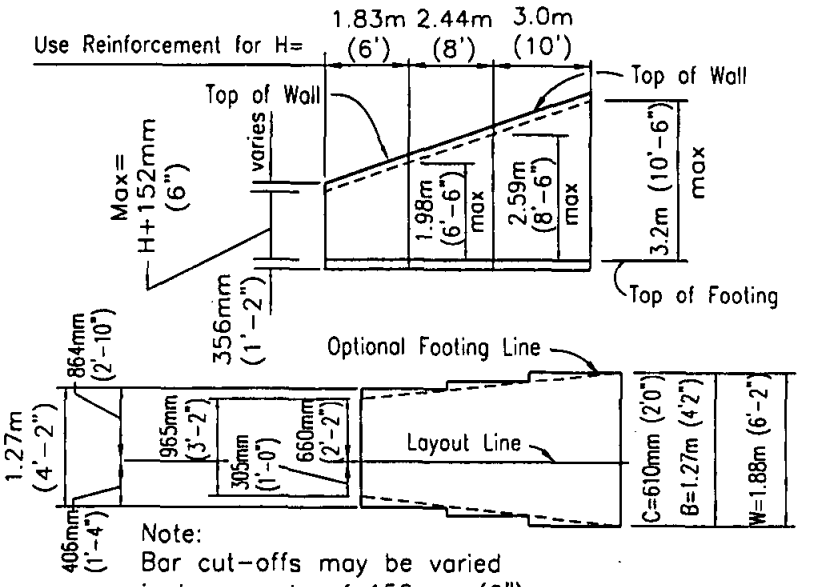

Note:
Bar cut-offs may be varied in increments of 152mm (6")

TYPICAL LAYOUT EXAMPLE

For joints required, see Details 3-3 and 3-4, Std Dwg C-15

TABLE OF REINFORCING STEEL DIMENSIONS AND DATA

Design H		⊛1.22m (4')	1.83m (6')	2.44m (8')	3.0m (10')	3.66m (12')
W		965mm (3'-2")	1.27m (4'-2")	1.57m (5'-2")	1.88m (6'-2")	2.18m (7'-2")
C		305mm (1'-0")	406mm (1'-4")	508mm (1'-8")	610mm (2'-0")	711mm (2'-4")
B		356mm (1'-2")	864mm (2'-10")	1.07m (3'-6")	1.27m (4'-2")	1.47m (4'-10")
ⓒ bars		#16(#5)@610mm(24")	#16(#5)@559mm(22")	#16 (#5)@279mm (11")	#19(#6)@229mm(9")	#22(#7)@191mm(7-1/2")
ⓓ bars		#16(#5)@610mm(24")	#16(#5)@559mm(22")	#16 (#5)@559mm (22")	#22(#7)@457mm(18")	#25 (#8)@15
Total ⓔ bars		6-#19 (#6)	6-#19 (#6)	6-#19 (#6)	10-#22 (#7)	10-#22 (#7)
Total ⓕ bars					4-#22 (#7)	4-#22 (#7)
Case I - Toe Press.		76.1 kg/m² (1590psf)	92.4kg/m² (1930psf)	107kg/m² (2240psf)	122kg/m² (2550psf)	136kg/m² (2840psf)
Case II - Toe Press.		50.8 kg/m² (1060psf)	69.9kg/m² (1460psf)	89.1kg/m² (1860psf)	109kg/m² (2280psf)	129kg/m² (2700psf)
Spread Footing	Steel lbs/ft	6.8kg (15lb)	9.52kg (21lb)	12.25kg (27lb)	21.3kg (46lb)	31.8kg (70lb)
	Conc CF/ft	3.9kg (8.6lb)	5.35kg (11.8lb)	6.76kg (14.9lb)	8.21kg (18.1lb)	9.66kg (21.3lb)
Pile Ftg	Steel lbs/ft	11.3kg (25lb)	14.51kg (32lb)	17.24kg (38lb)	34.0kg (75lb)	45.8kg (101lb)
	Conc CF/ft	4.5kg (9.9lb)	5.40kg (11.9lb)	6.94kg (15.3lb)	8.53kg (18.8lb)	10.1kg (22.2lb)

Note:
Quantities apply to Design H portion and exclude the added portion above "Gutter Elevation".

Revision	By	Approved	Date
ORIGINAL		Kercheval	12/75
Add Metric	T. Stanton		03/03

SAN DIEGO REGIONAL STANDARD DRAWING

REINFORCED CONCRETE RETAINING WALL
TYPE 1A

RECOMMENDED BY THE SAN DIEGO REGIONAL STANDARDS COMMITTEE

Chairperson R.C.E. 19246 Date 3/01/2003

DRAWING NUMBER C-12B

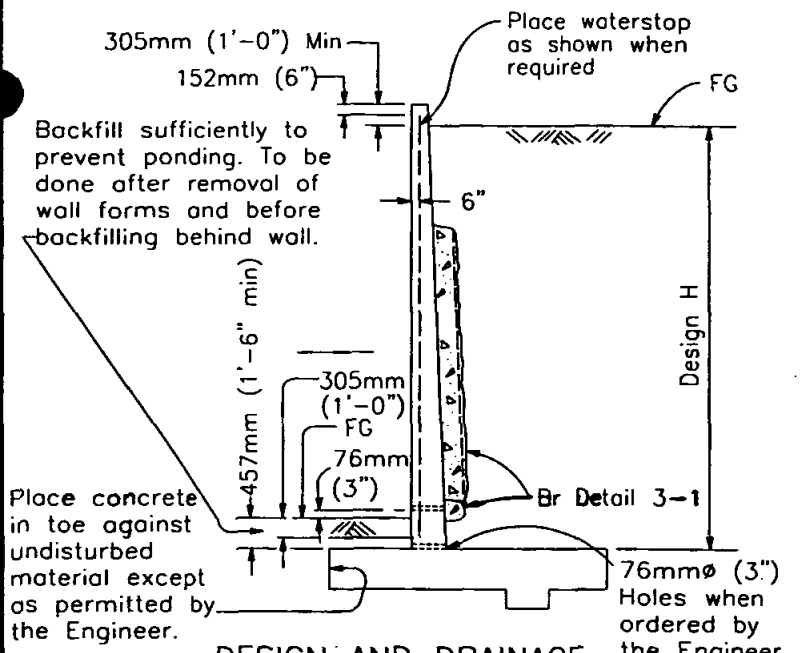

DESIGN AND DRAINAGE

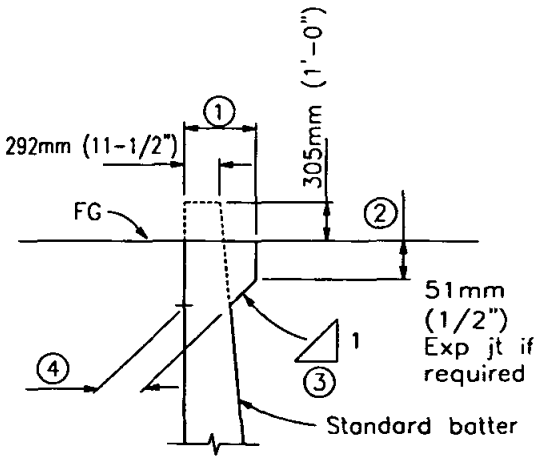

Dimensions ①, ② and ③ to be as shown elsewhere in the Project Plans.

④ Stem width at base of haunch to be determined as shown.

STEM WIDTH AT BASE OF HAUNCH

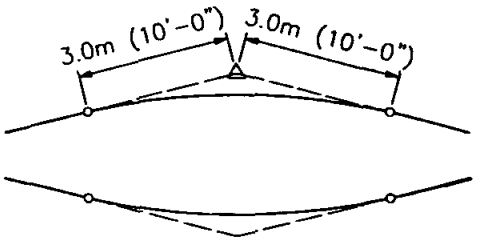

6.1m (20') VC AT TOP OF WALL SLOPE CHANGE

Where shown on the plans

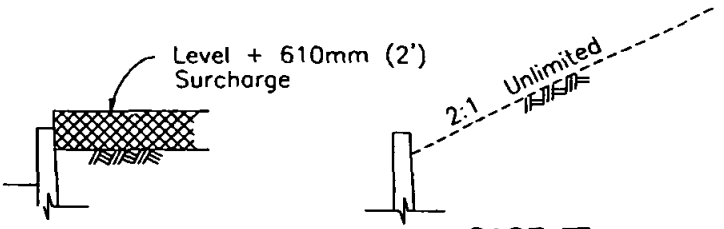

CASE I

CASE II

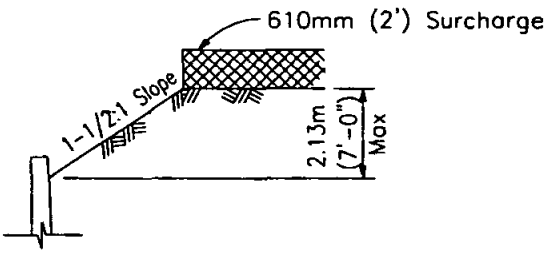

CASE III

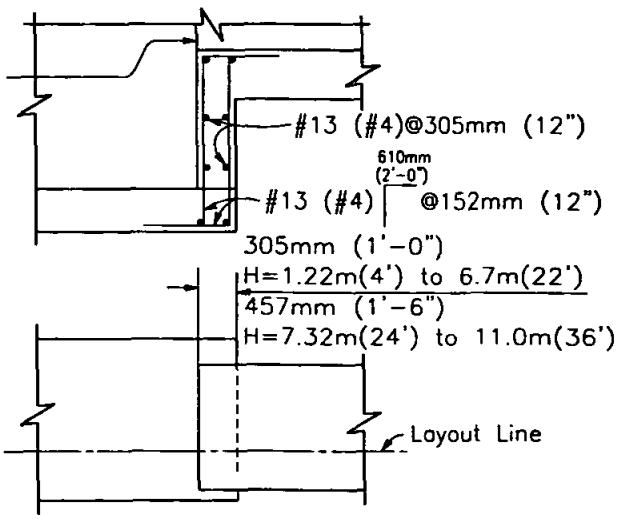

FOOTING STEP

DETAIL OF DESIGN LOADING CASES

CASE I	Level + 610mm (2') Surcharge
CASE II	2:1 Unlimited Slope
CASE III	1-1/2:1 Limited Slope (2.13m (7'-0") Max height) + 610mm (2') Surcharge

NOTE: Surcharge Limits Shown Apply To Retaining Walls Type 1 and 3.

Revision	By	Approved	Date
ORIGINAL		Kercheval	12/75
Add Metric		T. Stanton	03/03

SAN DIEGO REGIONAL STANDARD DRAWING

REINFORCED CONCRETE RETAINING WALL DETAILS No. 1

RECOMMENDED BY THE SAN DIEGO REGIONAL STANDARDS COMMITTEE

T. Stanton 3/10/2003

Chairperson R.C.E. 19246 Date

DRAWING NUMBER C-13A

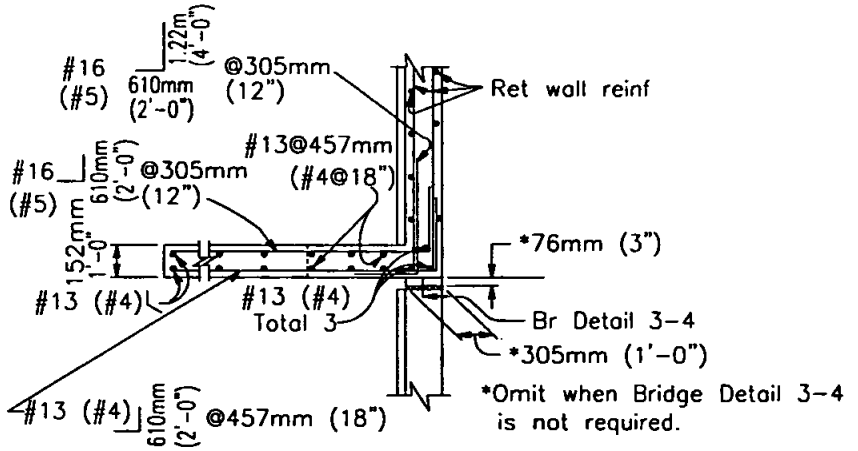

PLAN
(For return wall Type "A")

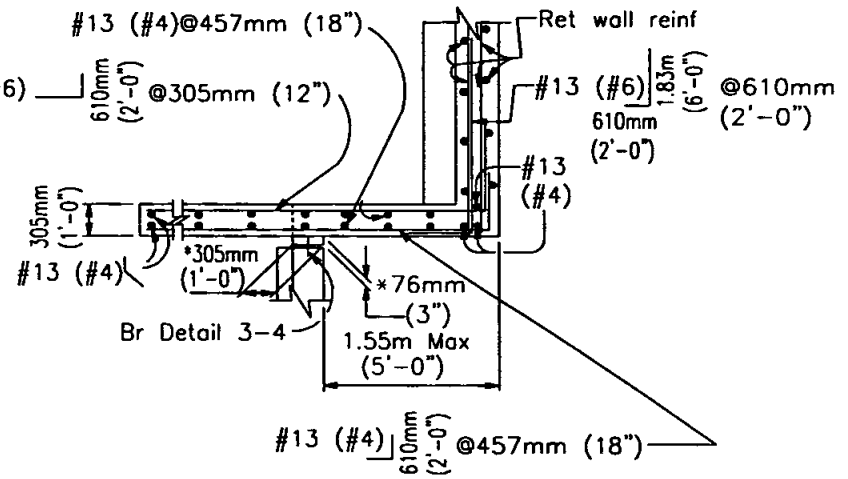

PLAN
(For return wall Type "B")

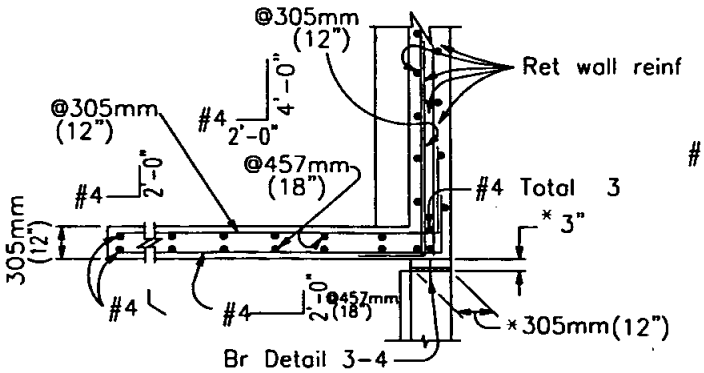

* Omit when Bridge Detail 3-4 is not required.

PLAN
(For return wall Type "C")

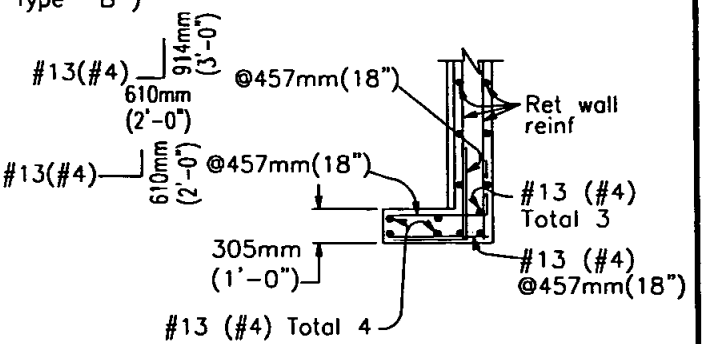

PLAN
(For return wall Type "D")

Revision	By	Approved	Date
ORIGINAL		Kercheval	12/75
Add Metric		T. Stanton	03/03

SAN DIEGO REGIONAL STANDARD DRAWING

REINFORCED CONCRETE RETAINING WALL DETAILS No. 1

RECOMMENDED BY THE SAN DIEGO REGIONAL STANDARDS COMMITTEE

T. Stanton 3/10/2003

Chairperson R.C.E. 19246 Date

DRAWING NUMBER **C-13B**

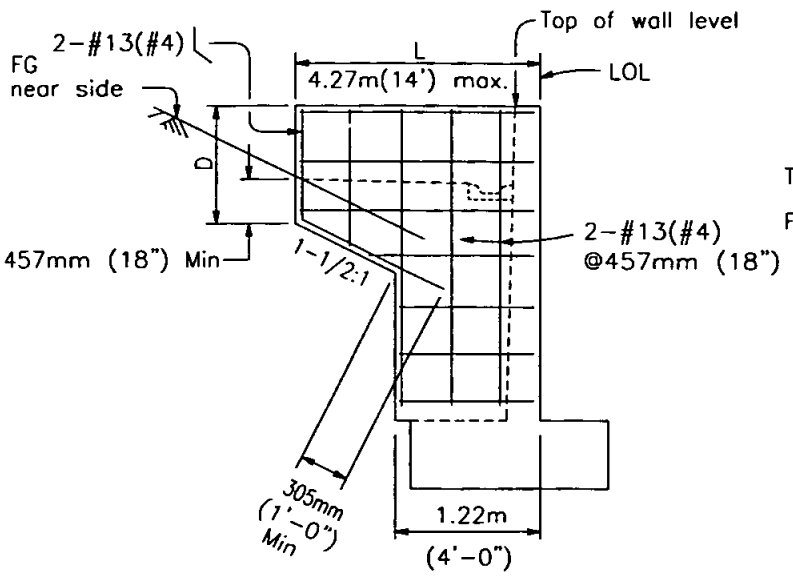

ELEVATION

RETURN WALL TYPE A

Use where H=2.44m (8') or less

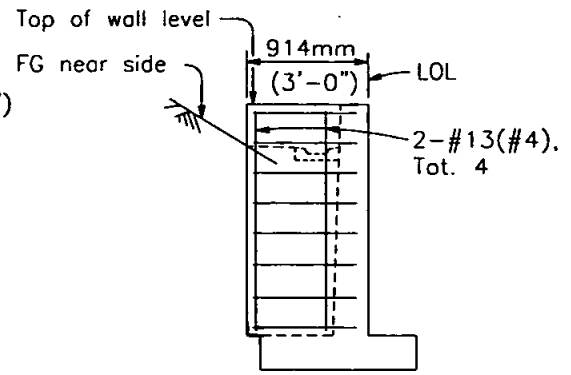

ELEVATION

RETURN WALL TYPE D

Use where H=1.83m (6') or less

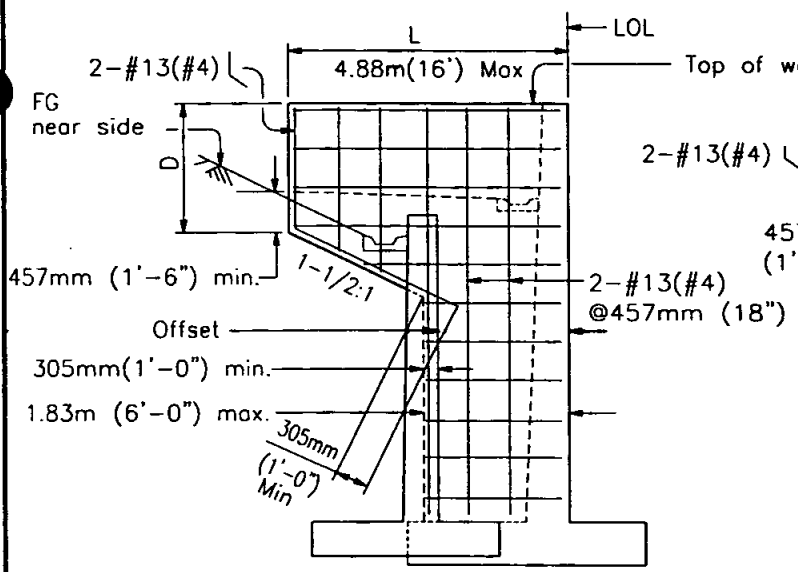

ELEVATION

RETURN WALL TYPE B

Use where H=3.0m (10') or more on offset walls

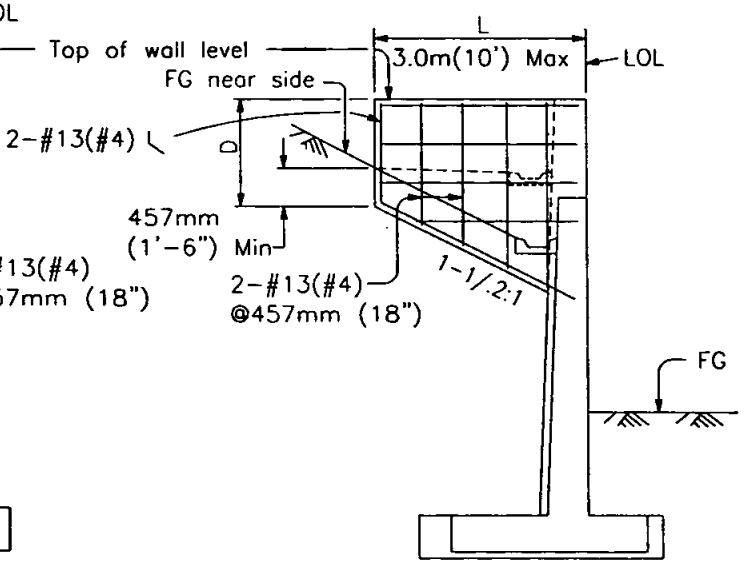

ELEVATION

RETURN WALL TYPE C

Use where H=3.9m (10') or more on straight walls

Revision	By	Approved	Date
ORIGINAL		Kercheval	12/75
Add Metric		T. Stanton	03/03

SAN DIEGO REGIONAL STANDARD DRAWING

REINFORCED CONCRETE RETAINING WALL DETAILS No. 1

RECOMMENDED BY THE SAN DIEGO REGIONAL STANDARDS COMMITTEE

T. Stanton 3/10/2003

Chairperson R.C.E. 19246 Date

DRAWING NUMBER **C-13C**

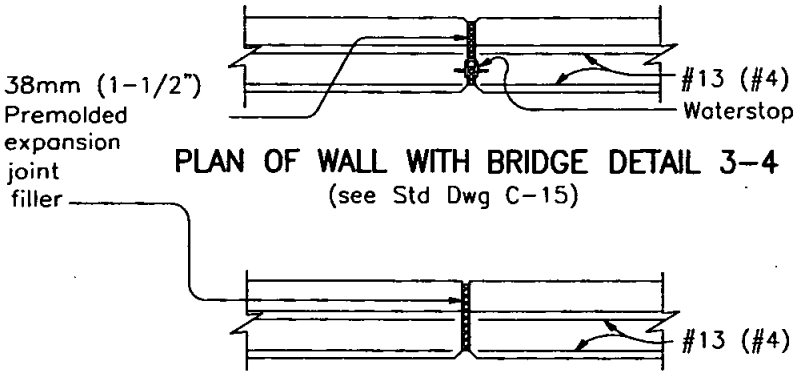

PLAN OF WALL WITH BRIDGE DETAIL 3-4
(see Std Dwg C-15)

PLAN OF WALL WITH EXPANSION JOINT ONLY

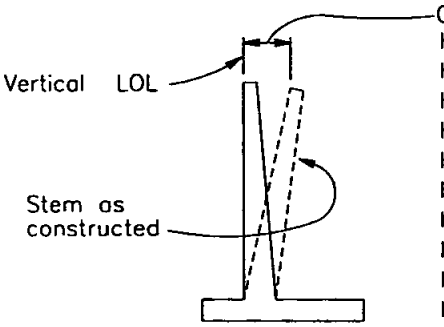

Offset as follows:
H 1.22m(4')=6.35mm(1/4")
H 1.88m(6')=9.53mm(3/8")
H 2.44m(8')=13mm(1/2")
H 3.00m(10')=16mm(5/8")
H 3.66m(12')=19mm(3/4")
H 4.27m(14')=25.4mm(1")
H 4.88m(16')=32mm(1-1/4")
H 5.49m(18')=38mm(1-1/2")
H 6.10m(20')=44.5mm(1-3/4")
H 6.71m(22')=51mm(2")
H 7.32m(24')=57mm(2-1/4")
H 7.93m(26') thru 10.97m (36')=63.5mm(2-1/2")

APPROX. WALL OFFSET VALUES

Not required for wall Types 3 and 4.
Values for offsetting forms to be determined by the Engineer.

NOTES

Design Conditions:

Design H may be exceeded by 152mm (6") before going to the next size. Special footing design is required where foundation material is incapable of supporting toe pressure listed in table. Return wall not required unless shown elsewhere.

Design Data:

fc = 8.96Mpa (1300 psi) f'c = 22.4Mpa (3250) psi fs = 166Mpa (24,000 psi)
n = 10 earth = 1922 kg/cu m (120 pcf)
610mm (2') Surcharge:
Equivalent fluid pressure =
36 pcf maximum for determination of toe pressure.
27 pcf minimum for determination of heel pressure.

Earth pressures for 2:1 unlimited slope, 1-1/2:1 slope, and 1-1/2:1 unlimited slope, determined from Rankine's formula with ø=33°-12.8m(42').

Revision	By	Approved	Date
ORIGINAL		Kercheval	12/75
Add Metric		T. Stanton	03/03

SAN DIEGO REGIONAL STANDARD DRAWING

REINFORCED CONCRETE
RETAINING WALL DETAILS No. 1

RECOMMENDED BY THE SAN DIEGO REGIONAL STANDARDS COMMITTEE

T. Stanton 3/01/2003
Chairperson R.C.E. 19246 Date

DRAWING NUMBER C-13D

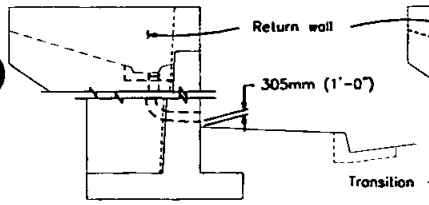

RETAINING WALL, FACE OF WALL OUTLET

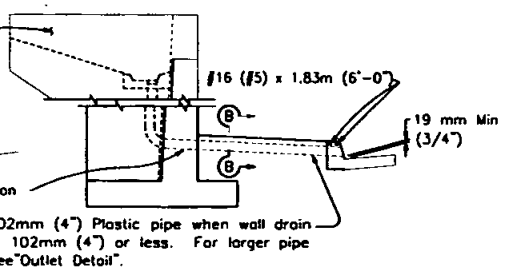

RETAINING WALL, GUTTER OUTLET

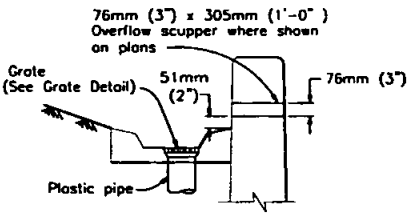

WALL DRAIN DETAIL

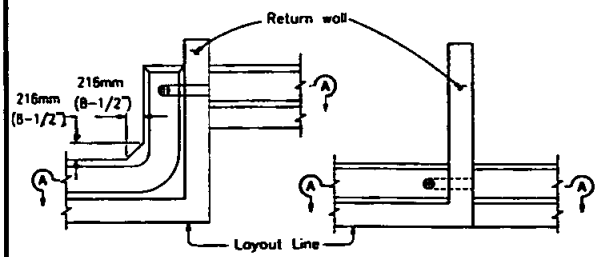

PLAN-OFFSET WALL PLAN-CONTINUOUS WALL

DRAIN THROUGH RETURN WALL

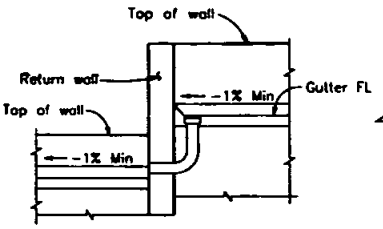

SECTION A-A

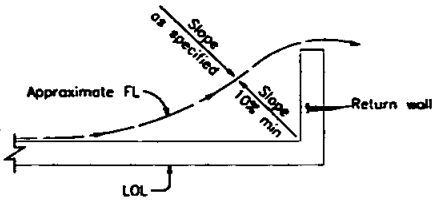

WALL DRAINAGE WHERE GUTTER NOT REQUIRED

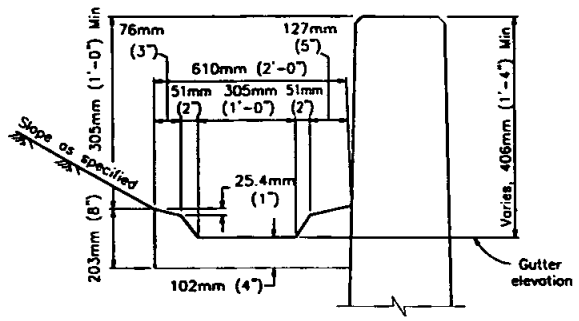

TYPICAL GUTTER DETAIL

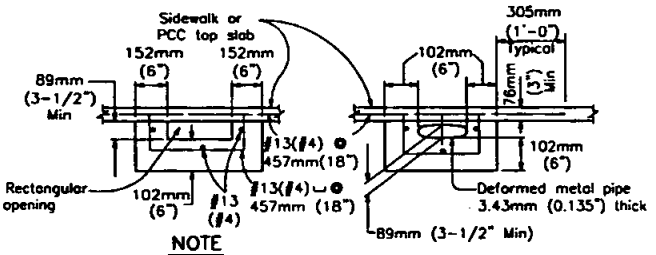

NOTE

Area of opening to be not less than that of pipe from wall gutter. Make opening transition in wall. Edge opening in curb face to 19mm (3/4") minimum radius.

OUTLET DETAIL - SECTION B-B

GRATE DETAIL

Sizes to fit standard hubs

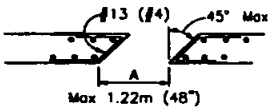

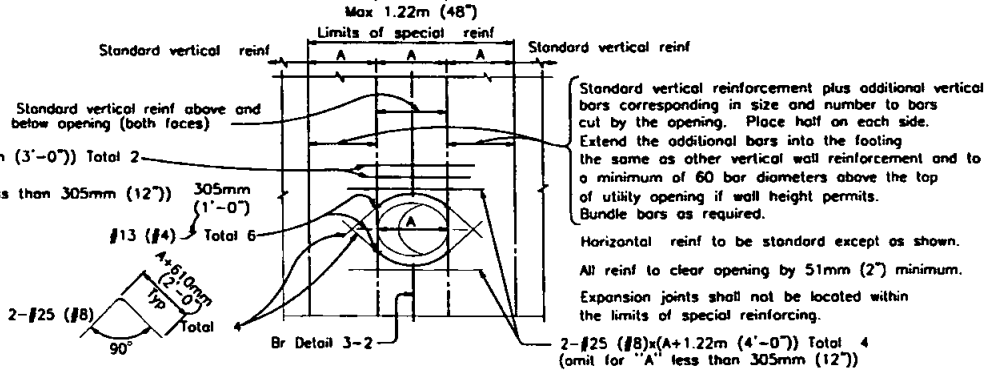

RETAINING WALL UTILITY OPENING

Max size of opening (A) = 1.22m (48") To be used in conjunction with Standard Drawing C-13.

Revision	By	Approved	Date
ORIGINAL		Kercheval	12/75
Add Metric		T. Stanton	03/03

SAN DIEGO REGIONAL STANDARD DRAWING

REINFORCED CONCRETE RETAINING WALL DETAILS No. 2

RECOMMENDED BY THE SAN DIEGO REGIONAL STANDARDS COMMITTEE

T. Stanton 3/10/2003

Chairperson R.C.E. 19246 Date

DRAWING NUMBER C-14

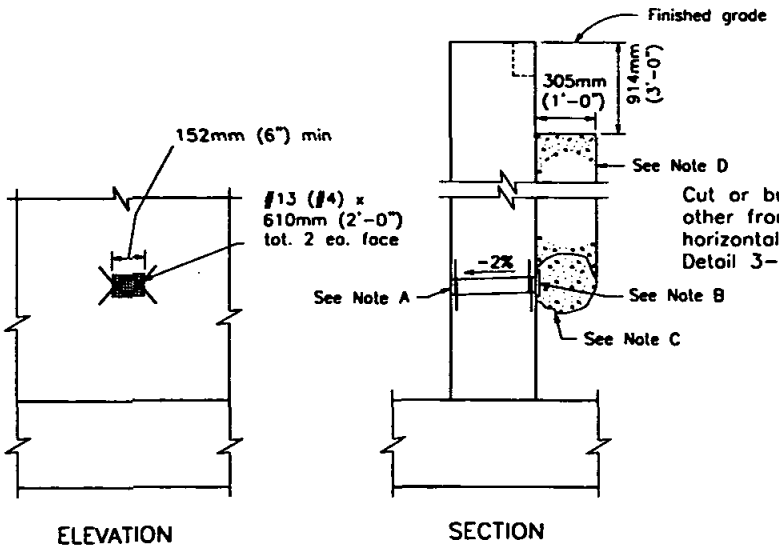

WEEP HOLE AND PERVIOUS BACKFILL
DETAIL 3-1

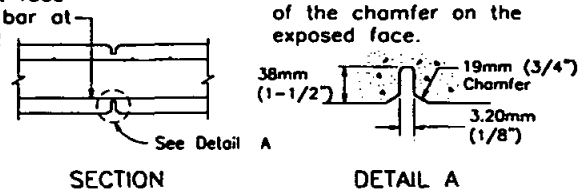

WEAKENED PLANES
DETAIL 3-2

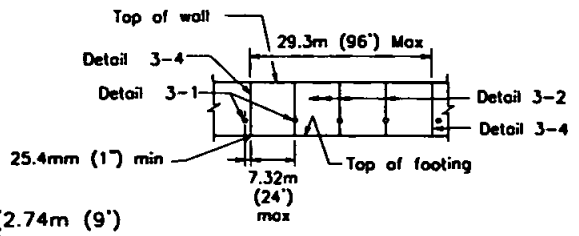

WALL EXPANSION JOINTS
AND WEAKENED PLANES
DETAIL 3-3

NOTES

A. 102mm (4") diameter drain @ 7.62m (25') max. center to center (2.74m (9') c-c for Type 3 and 2.82m (9'-3") c-c for Type 4 Retaining Walls). For walls adjacent to sidewalks or curbs, provide 102mm (4") cast iron or asbestos cement pipe under the sidewalk to discharge thru curb face. Exposed wall drains shall be located 76mm (3") ± above finished grade.

B. 152mm (6") square aluminum or galvanized steel wire 4 mesh hardware cloth.(Min wire diameter .762mm (0.03")) Anchor firmly to backface.

C. .028 Cubic Meter (One cubic foot) pervious backfill material in a burlap sack, securely tied.

D. Pervious backfill material continuous behind retaining wall.

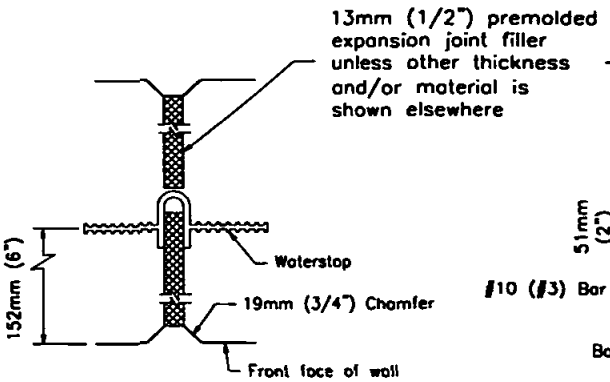

WALL EXPANSION JOINT
DETAIL 3-4

Waterstop to have 5 or more pairs of raised ribs to provide 64.5 sq mm (0.1 sq in) min. rib cross-section area on each half of the water stop. Height of ribs to be 2.38mm (3/32") min.

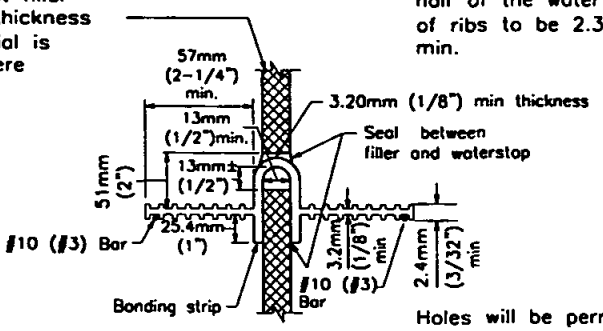

WATERSTOP
DETAIL 3-6

Holes will be permitted in the outer 13mm (1/2") of the web for wire, rings etc. Tie web to #10 (#3) reinforcing bars @ 305mm (12") max intervals to support the waterstop in proper position during concrete placement. Alternative detail may be submitted for approval of the engineer.

Revision	By	Approved	Date
ORIGINAL		Kercheval	12/75
Add Metric		T. Stanton	03/03

SAN DIEGO REGIONAL STANDARD DRAWING

REINFORCED CONCRETE RETAINING WALL DETAILS No. 3

RECOMMENDED BY THE SAN DIEGO REGIONAL STANDARDS COMMITTEE

T. Stanton 3/10/2003

Chairperson R.C.E. 19246 Date

DRAWING NUMBER C-15

DRAINAGE SYSTEMS

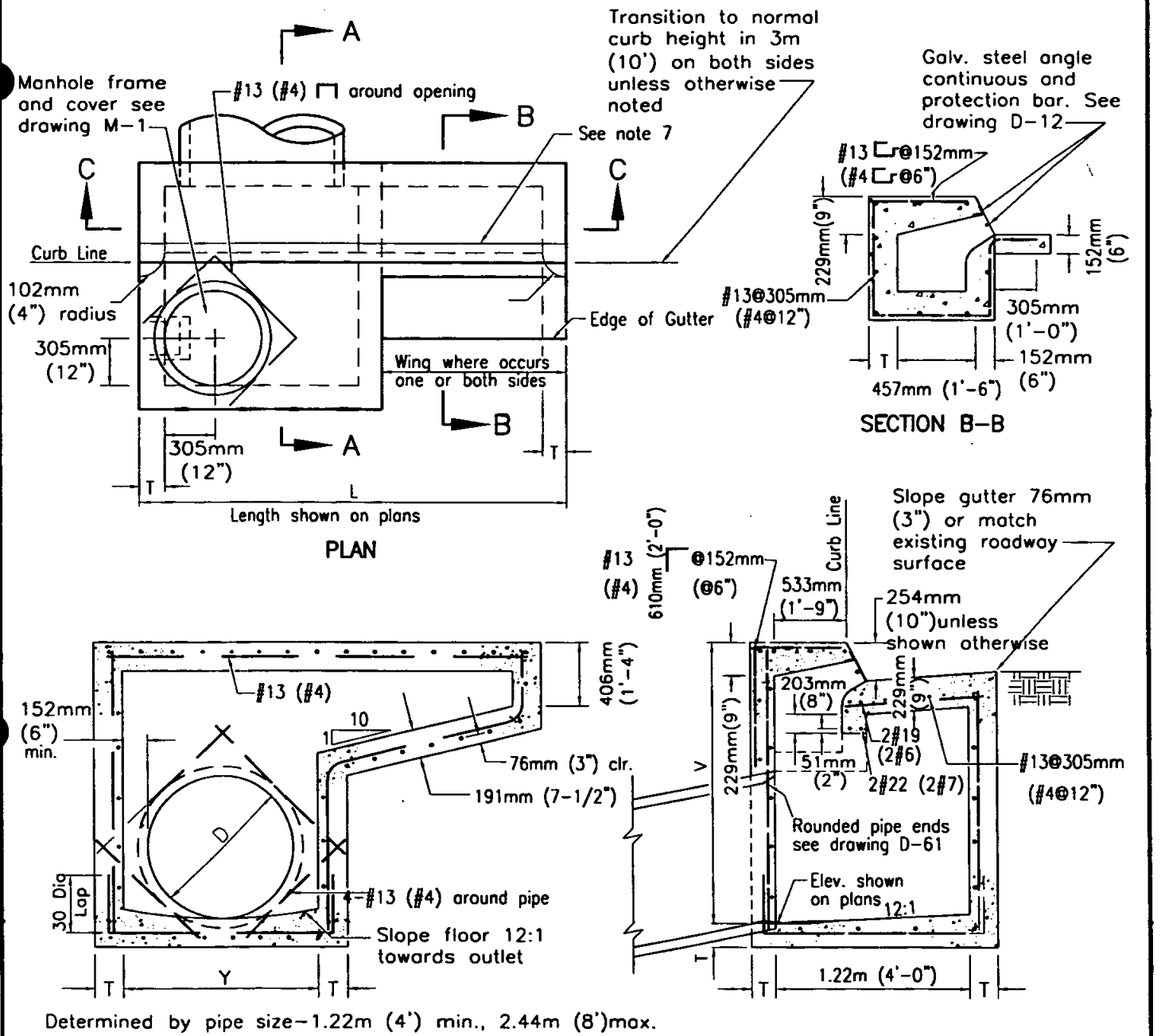

NOTES

1. See Standard Drawings D-11 & D-12 for additional notes and details.
2. Types are designated as follows: (no wing)A, (one wing)A-1, (two wings)A-2.
3. Exposed edges of concrete shall be rounded with a radius of 13mm (1/2").
4. When V exceeds 4' steps shall be installed. See Standard Drawing D-11 for details.
5. Concrete gutter to match adjacent gutters.
6. An expansion joint shall be placed at the ends of the inlet where the curb is to adjoin.
7. Provide 6.35mm (1/4") tooled groove in top slab in line with back of adjacent curb.
8. Surface of top slab shall be sidewalk finished to drain toward street at a slope of 6.35mm (1/4") per foot.
9. Maintain 38mm (1-1/2") clear spacing between reinforcing and surface unless otherwise noted.

LEGEND ON PLANS

Revision	By	Approved	Date
ORIGINAL		Kercheval	12/75
Add Metric		T. Stanton	03/03
Reformatted		T. Stanton	04/06

SAN DIEGO REGIONAL STANDARD DRAWING

CURB INLET - TYPE A

RECOMMENDED BY THE SAN DIEGO REGIONAL STANDARDS COMMITTEE

T. Stanton 3/01/2003

Chairperson R.C.E. 19246 Date

DRAWING NUMBER D-1

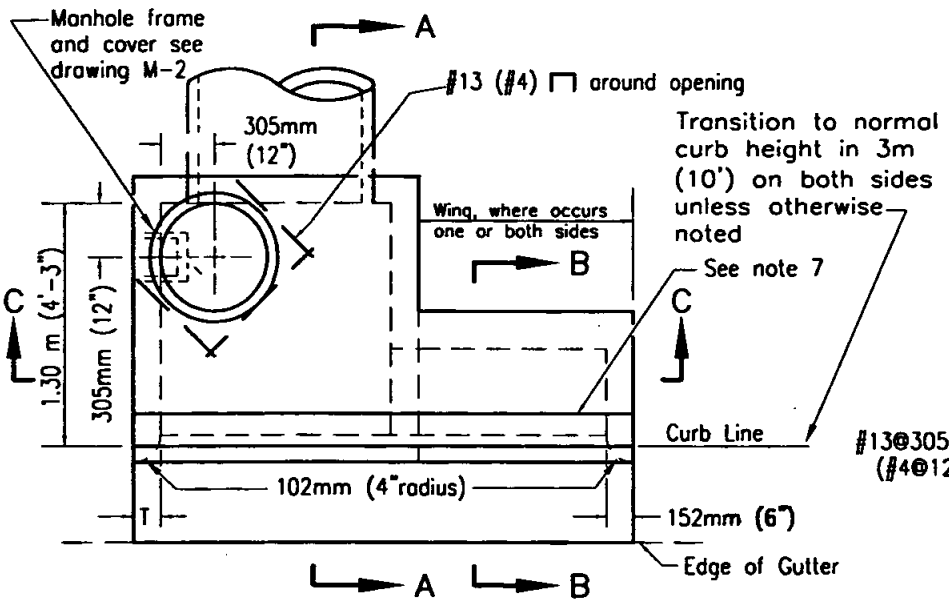

PLAN

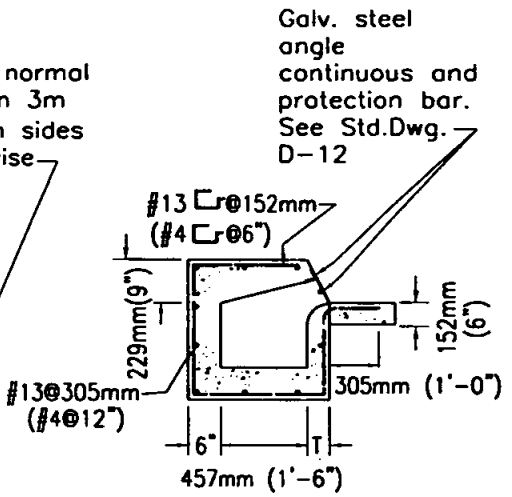

SECTION B–B

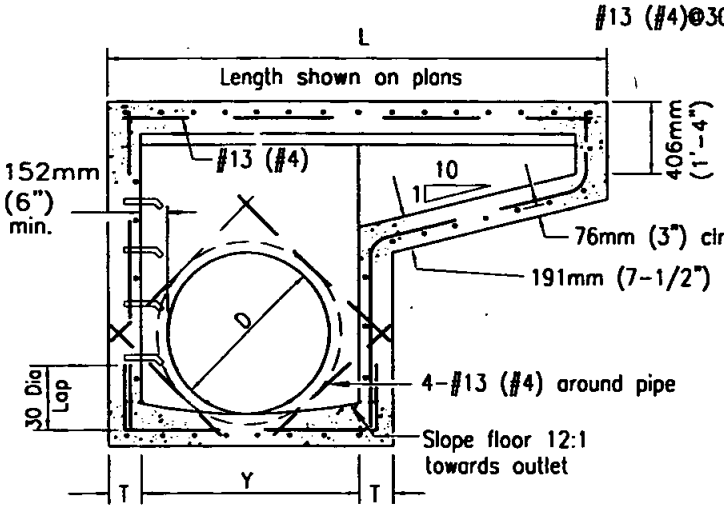

Determined by pipe size–1.22m (4') min., 2.44m (8')max.

SECTION C–C

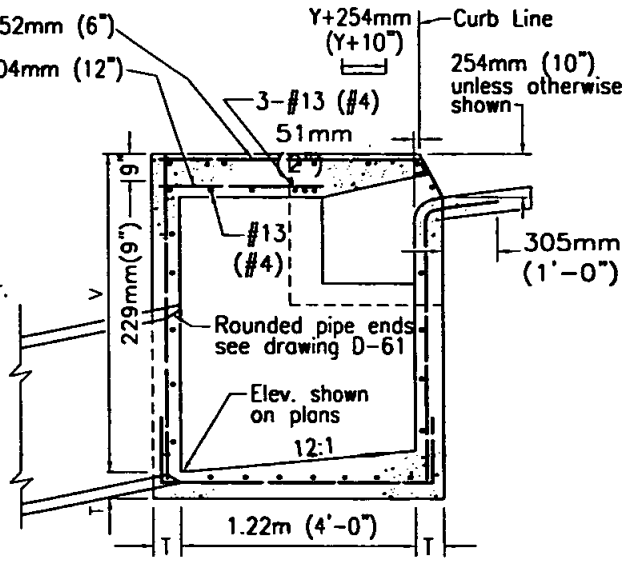

SECTION A–A

NOTES

1. See Standard Drawings D-11 & D-12 for additional notes and details.
2. Types are designated as follows: (no wing)B, (one wing)B-1, (two wings)B-2.
3. Maintain 38mm (1-1/2") clear spacing between reinforcing and surface unless otherwise noted.
4. When V exceeds 4' steps shall be installed. See Standard Drawing D-11 for details.
5. Concrete gutter to match adjacent gutters.
6. An expansion joint shall be placed at the ends of the inlet where the curb is to adjoin.
7. Provide 6.35mm (1/4") tooled groove in top slab in line with back of adjacent curb.
8. Surface of top slab shall be sidewalk finished to drain toward street at a slope of 6.35mm (1/4") per foot.
9. Maintain 38mm (1-1/2") clear spacing between reinforcing and surface unless otherwise noted.

LEGEND ON PLANS

Revision	By	Approved	Date
ORIGINAL		Kercheval	12/75
Add Metric		T. Stanton	03/03
Reformatted		T. Stanton	04/06

SAN DIEGO REGIONAL STANDARD DRAWING

CURB INLET - TYPE B

RECOMMENDED BY THE SAN DIEGO REGIONAL STANDARDS COMMITTEE

T. Stanton 3/01/2003

Chairperson R.C.E. 19246 Date

DRAWING NUMBER **D-2**

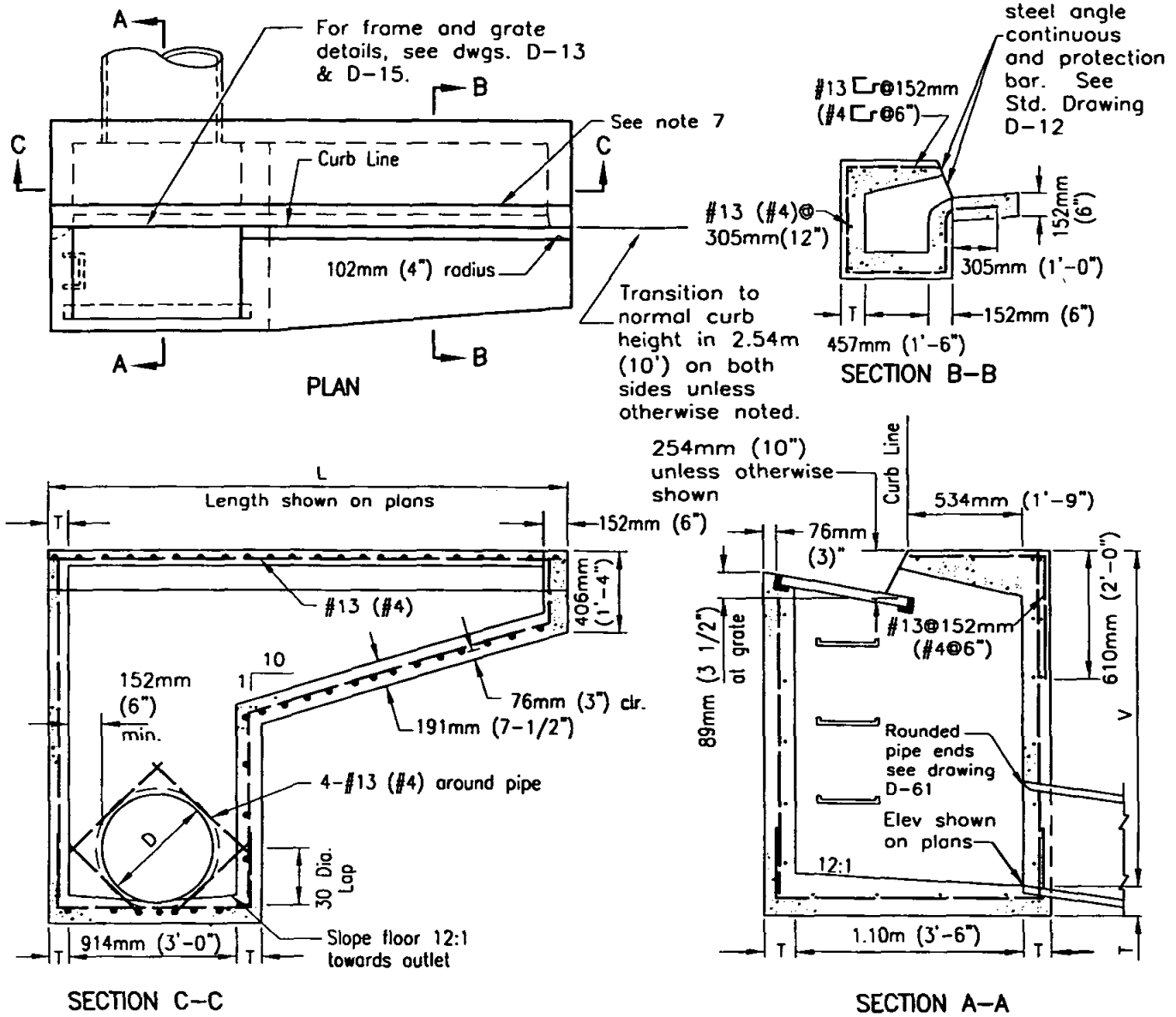

NOTES

1. See Standard Drawings D-11 through D-15 for additional notes and details.
2. Types are designated as follows: (no wing)C, (one wing)C-1, (two wings)C-2.
3. Exposed edges of concrete shall be rounded with a radius of 13mm (1/2").
4. When V exceeds 1.22m (4') steps shall be installed. See Standard Drawing D-11 for details.
5. Concrete gutter to match adjacent gutters.
6. An expansion joint shall be placed at the ends of the inlet where the curb is to adjoin.
7. Provide 6.35mm (1/4") tooled groove in top slab in line with back of adjacent curb.
8. Surface of top slab shall be sidewalk finished to drain toward street at a slope of 6.35mm (1/4") per foot.
9. Maintain 38mm (1-1/2") clear spacing between reinforcing and surface unless otherwise noted.
10. Where inlet is to be constructed on grade and Standard Drawing D-20 concrete apron is required, lift down-grade end of grate as shown on D-20.

LEGEND ON PLANS

Revision	By	Approved	Date
ORIGINAL		Kercheval	12/75
Add Metric		T. Stanton	03/03
Reformatted		T. Stanton	04/06

SAN DIEGO REGIONAL STANDARD DRAWING

CURB INLET - TYPE C

RECOMMENDED BY THE SAN DIEGO REGIONAL STANDARDS COMMITTEE

T. Stanton 3/01/2003

Chairperson R.C.E. 19246 Date

DRAWING NUMBER D-3

DIMENSIONS

T=203mm (8") if V is less than 2.44m (8').
T=254mm (10") if V is 2.44m (8') or more.
V=1.52m (5') unless otherwise specified.
V=D + 813mm (32") minimum.
W=2.13m (7') unless otherwise specified.
Y=1.52m (5') unless otherwise specified.
Width of driveway, W, shall be 3m (10') unless otherwise specified.
Elevation of point N shall be 330mm (13") below point H unless otherwise specified.

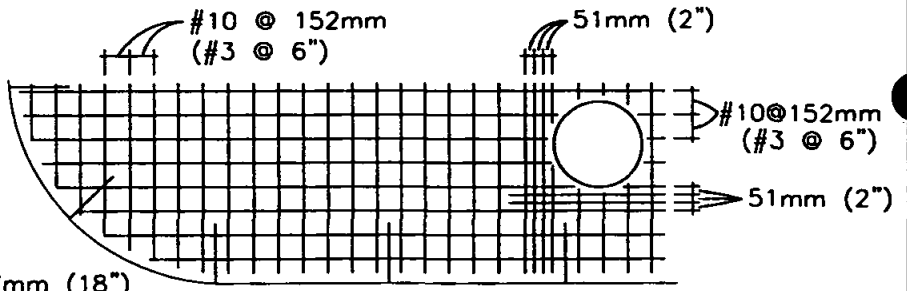

TOP SLAB REINFORCING PLAN

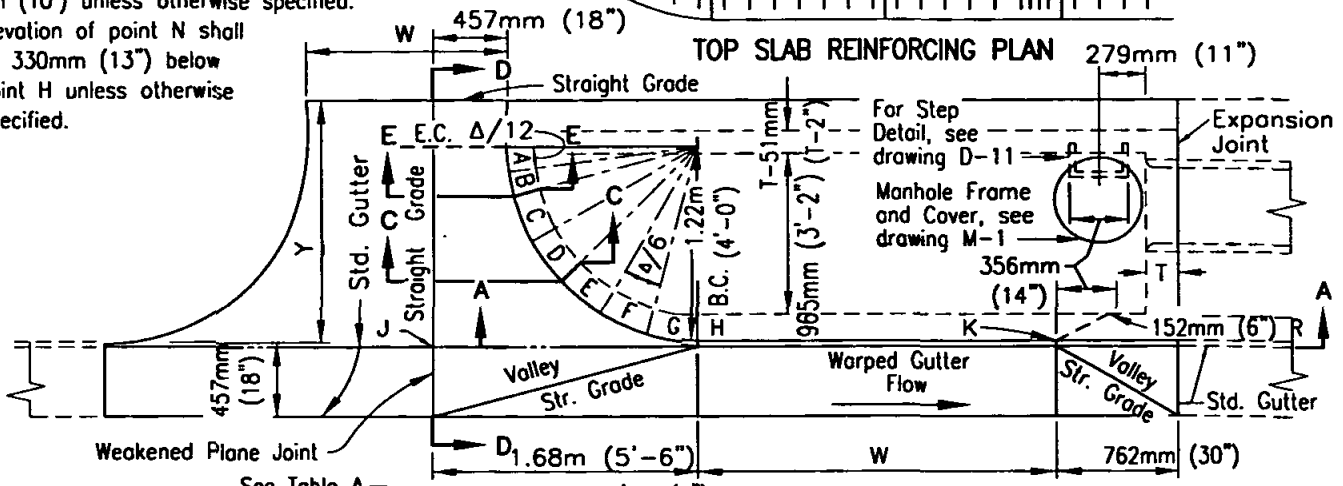

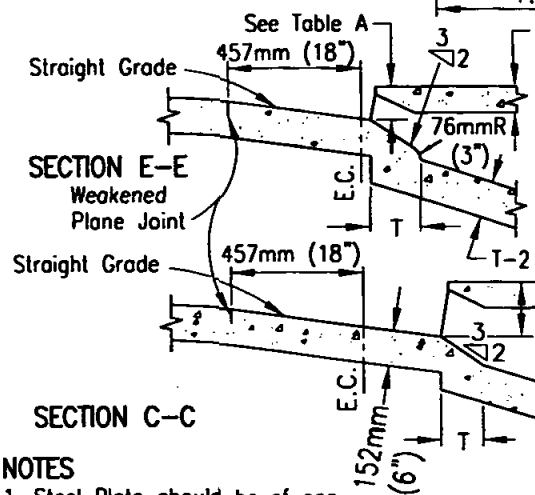

SECTION E-E
Weakened Plane Joint

SECTION C-C

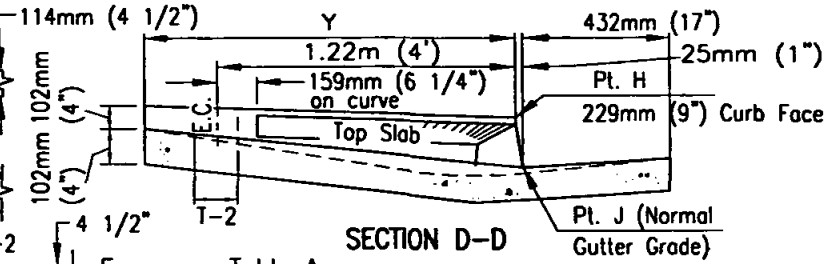

SECTION D-D

	PT	A	B	C	D	E	F	G	H	K	M
METRIC (mm)	F.C.	114	133	152	191	229	229	229	229	229	203
U.S. (inches)	F.C.	4½"	5¼"	6"	7½"	9"	9"	9"	9"	9"	8"

TABLE A

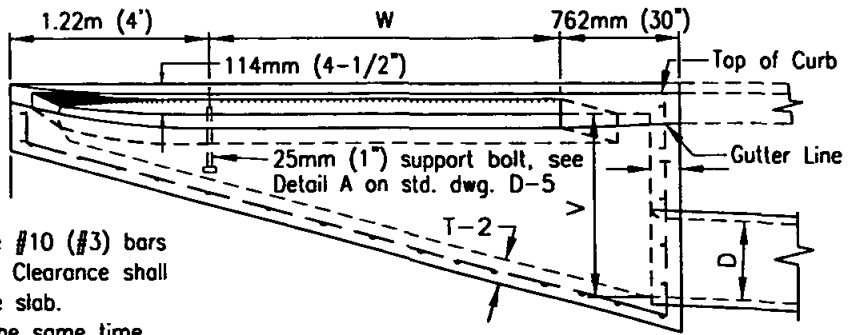

SECTION A-A

NOTES

1. Steel Plate should be of one continuous piece with curve portion a circular arc.
   Length = Width+457mm (18")+circular arc.
2. #13 (#4) rebar 762mm (30") long, 305mm (1') O.C. shall be installed in top of walls for ties to top and gutters.
3. The reinforcing steel in the top slab shall be #10 (#3) bars 152mm (6") O.C. unless otherwise specified. Clearance shall be 38mm (1-1/2") from the bottom of the slab.
4. Concrete for the inlet top to be placed at the same time as the s/w curb and gutter.
5. Concrete shall be 332kg/M³-C-22-Mpa (560-C-3250)
6. Exposed edges of concrete shall be rounded with a radius of 13mm (1/2").
7. Surface of top slab shall be sidewalk finished to drain toward street at a slope not to exceed 2%

Revision	By	Approved	Date
ORIGINAL		Kercheval	12/75
Add Metric		T. Stanton	03/03
Reformatted		T. Stanton	04/06

SAN DIEGO REGIONAL STANDARD DRAWING

CURB INLET - TYPE D

RECOMMENDED BY THE SAN DIEGO REGIONAL STANDARDS COMMITTEE

T. Stanton 3/10/2003

Chairperson R.C.E. 19246 Date

DRAWING NUMBER **D-4**

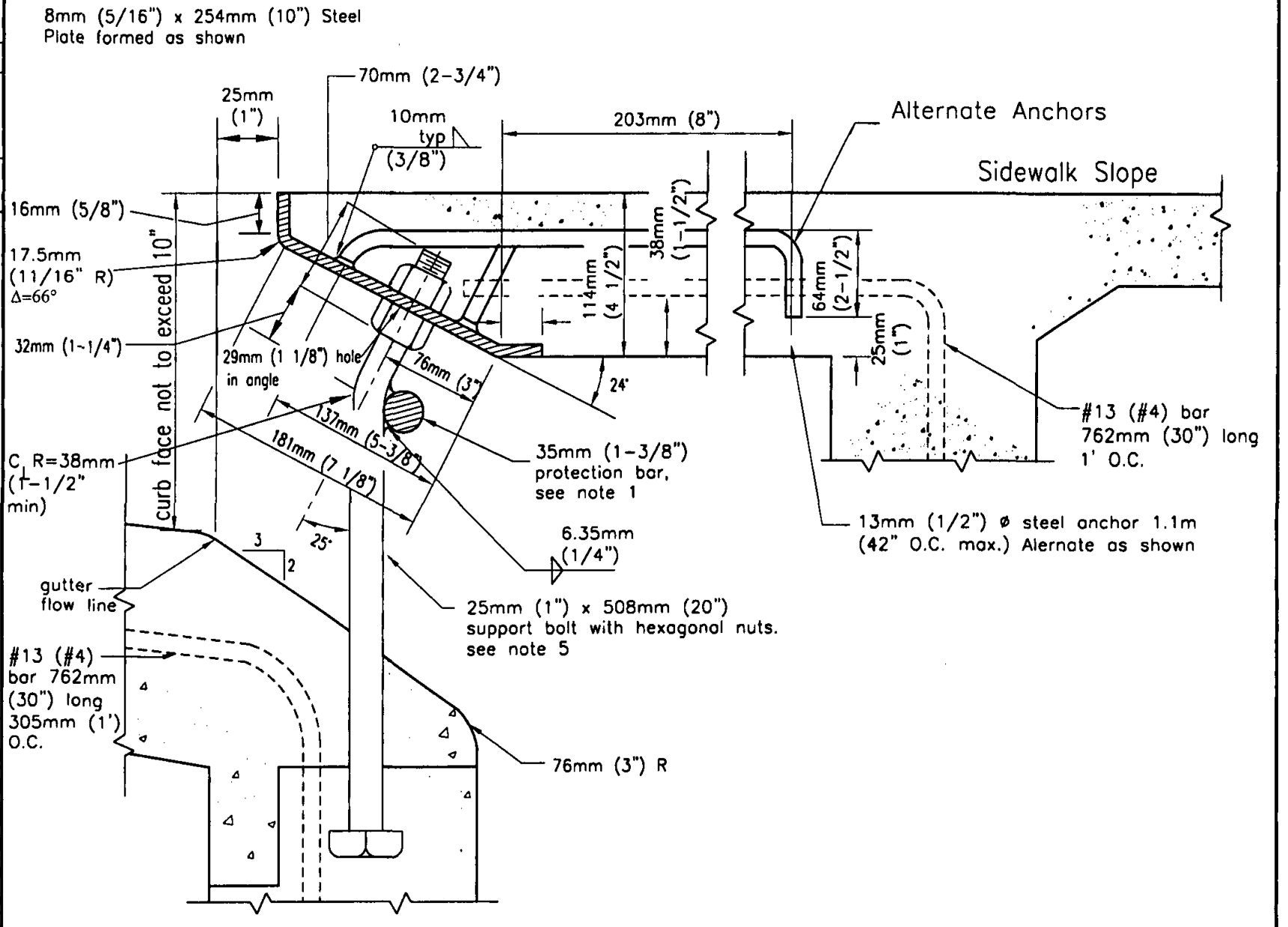

DETAIL-A

Revision	By	Approved	Date
ORIGINAL		Kercheval	12/75
Add Metric		T. Stanton	03/03
Reformatted		T. Stanton	04/06

SAN DIEGO REGIONAL STANDARD DRAWING

CURB INLET - TYPE D (DETAILS)

RECOMMENDED BY THE SAN DIEGO REGIONAL STANDARDS COMMITTEE

Chairperson R.C.E. 19246 Date 3/01/2003

DRAWING NUMBER **D-5A**

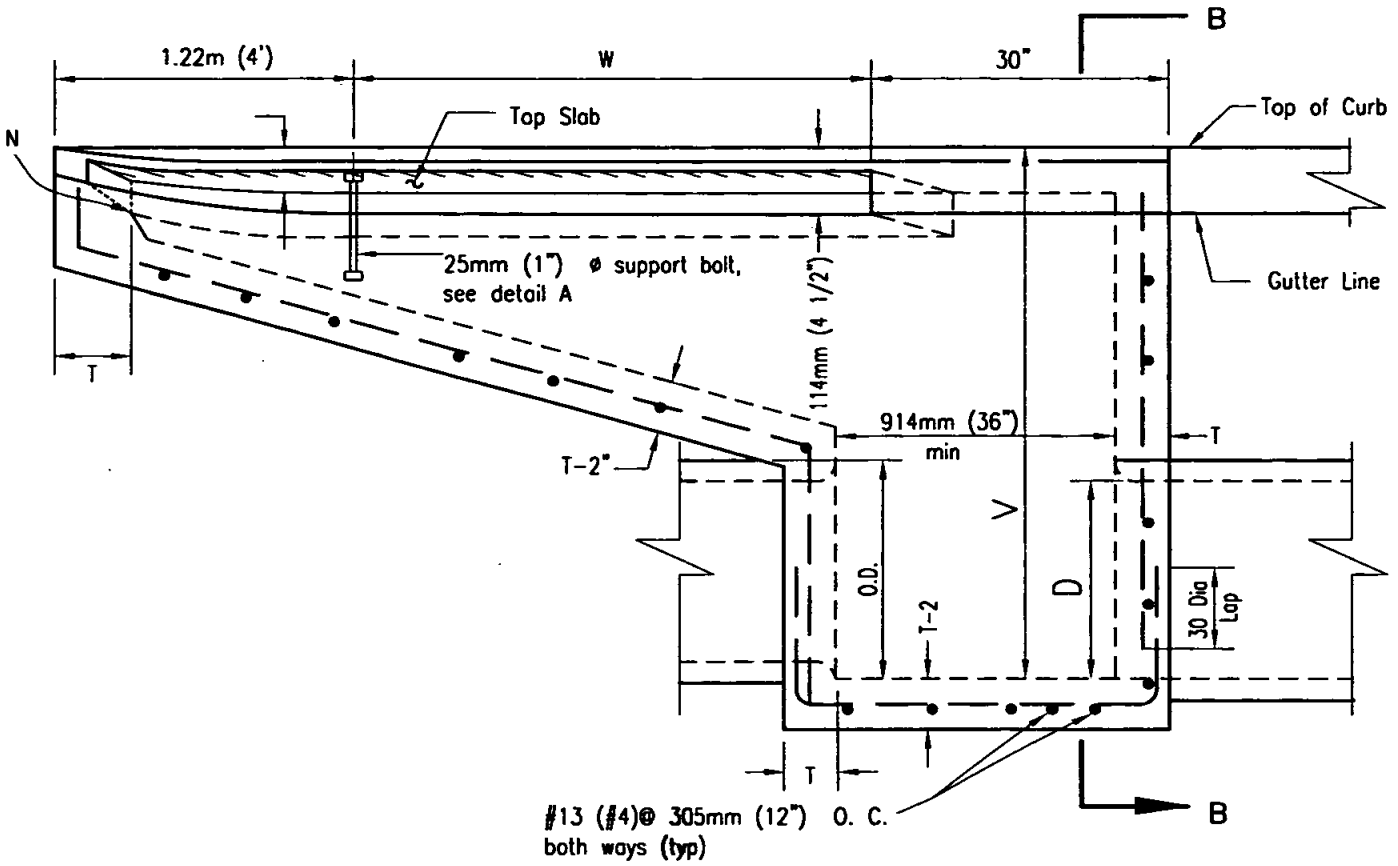

SECTION A–A MODIFIED

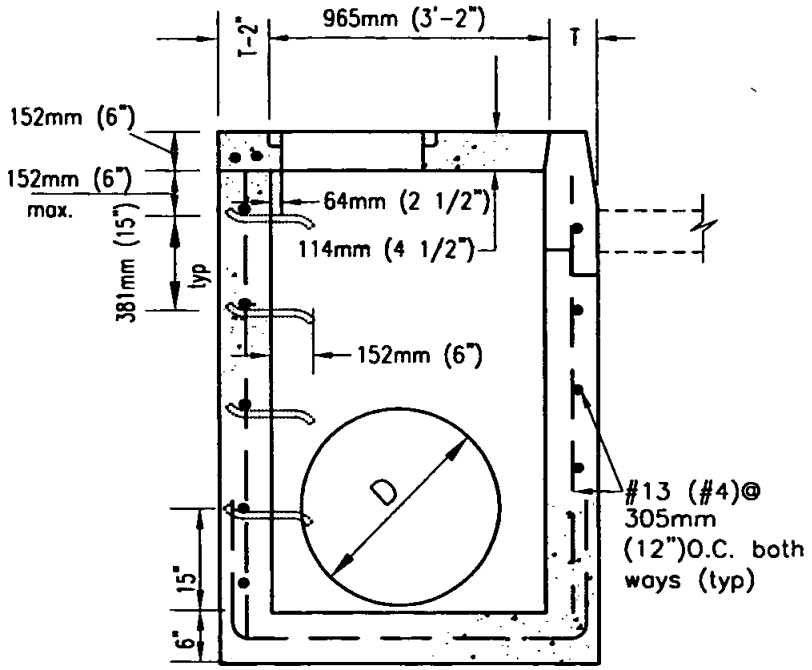

SECTION B–B

NOTES:

1. A plain, round steel protection bar 25mm (1") in dia. shall be installed. Bar shall be embedded 127mm (5") at each end.
2. Leave 203mm (8") hole blocked out in the bottom placing of concrete for bolts placed at the same time as gutter.
3. All exposed metal parts shall be galvanized.
4. All galvanizing damaged by welding shall receive two coats of aluminum paint.
5. Support bolts shall be spaced at not more than 1.52m (5'-0") O.C.
6. Adjusting nuts to be tightened and secured in placed when steel plate is in proper position.

Revision	By	Approved	Date
ORIGINAL		Kercheval	12/75
Add Metric		T. Stanton	03/03
Reformatted		T. Stanton	04/06

SAN DIEGO REGIONAL STANDARD DRAWING

CURB INLET - TYPE D (DETAILS)

RECOMMENDED BY THE SAN DIEGO REGIONAL STANDARDS COMMITTEE

T. Stanton 3/01/2003

Chairperson R.C.E. 19246 Date

DRAWING NUMBER **D-5B**

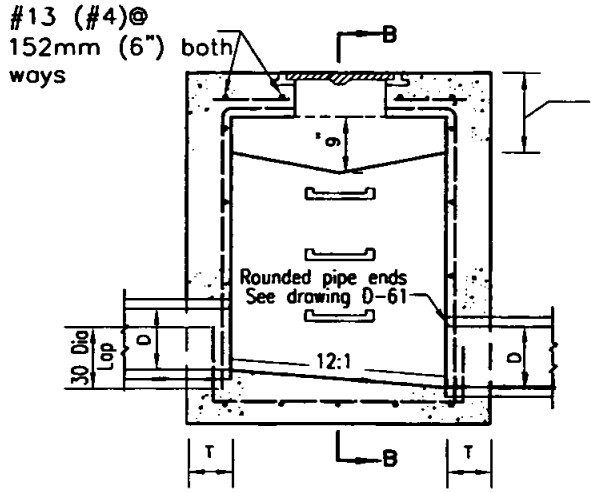

SECTION A–A

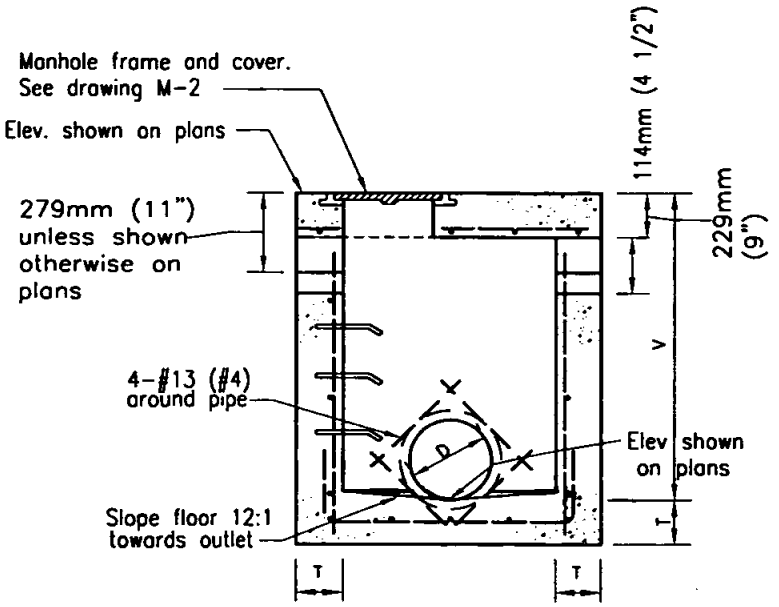

SECTION B–B

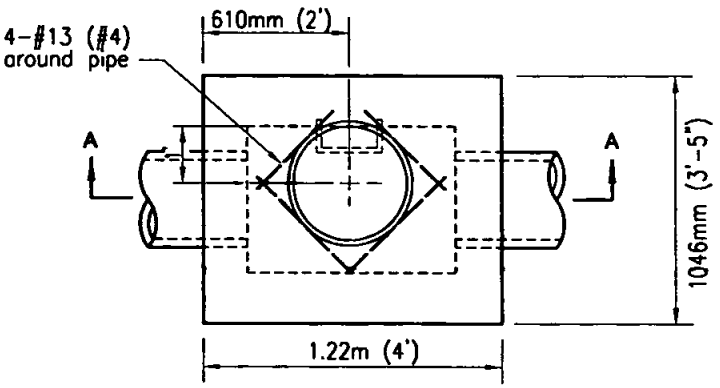

PLAN

NOTE:

1. See Standard Drawing D–11 for additional notes and details.
2. When V exceeds 1.22m (4') steps shall be installed. See Standard Drawing D–11 for details.
3. Exposed edges of concrete shall be rounded with a radius of 13mm (1/2").
4. Construct openings on both sides unless otherwise shown on plans.
5. Maintain 38mm (1–1/2") clear spacing between reinforcing and surface.
6. Install 25mm (1") steel protection bar.

LEGEND ON PLANS

Revision	By	Approved	Date
ORIGINAL		Kercheval	12/75
Add Metric		T. Stanton	03/03
Reformatted		T. Stanton	04/06

SAN DIEGO REGIONAL STANDARD DRAWING

CATCH BASIN - TYPE F

RECOMMENDED BY THE SAN DIEGO REGIONAL STANDARDS COMMITTEE

T. Stanton 3/01/2003

Chairperson R.C.E. 19246 Date

DRAWING NUMBER D-7

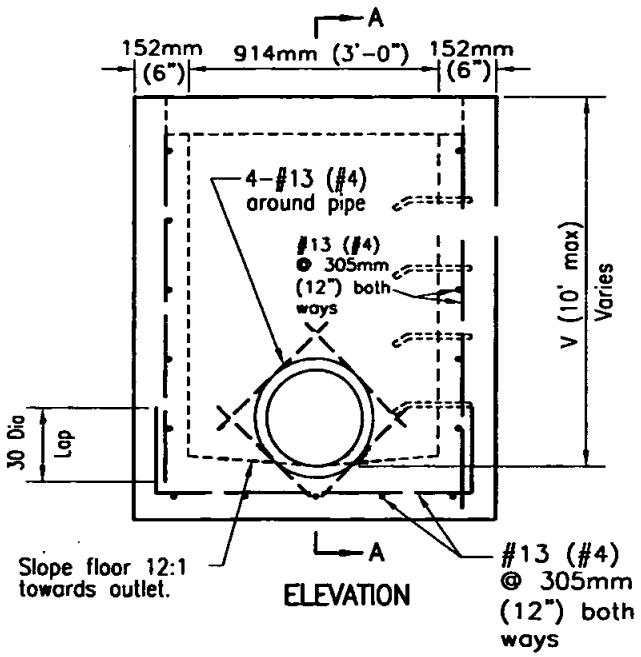

ELEVATION

NOTES

1. See Standard Drawing D-11 for additional notes and details.
2. When V exceeds 1.22m (4'), steps shall be installed. See Standard Drawing D-11 for details.
3. Maintain 38mm (1-1/2") clear spacing between reinforcing and surface.
4. Increase in allowable depth subject to approval by Agency.
5. Section A-A shows 3 sizes and shall not imply that an interior wall is to be built for the structures with with double or triple frame and grate.
6. Exposed edges of concrete shall be rounded with radius of 13mm (1/2").
7. Designate types as follows: Single G-1, Double G-2 and Triple G-3.
8. Only end bearing grates shall be used. See Std. Drawing D-15.

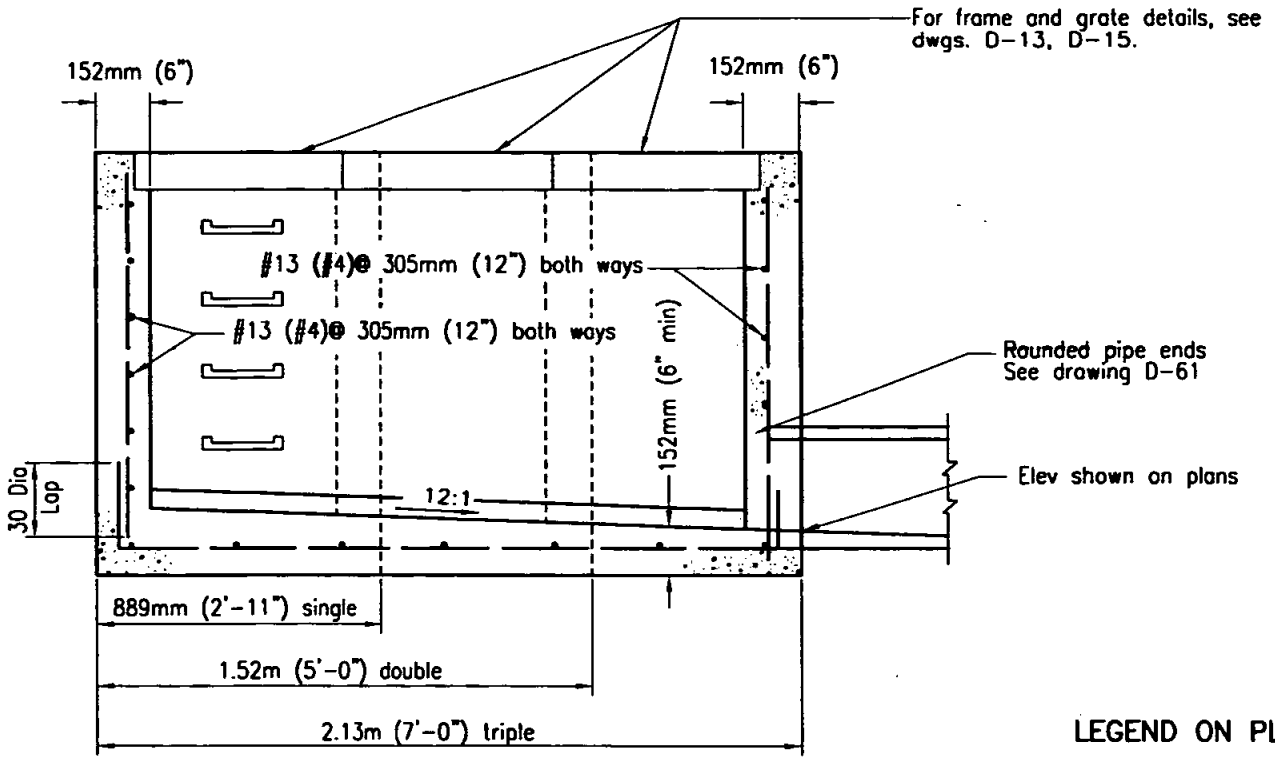

SECTION A-A

LEGEND ON PLANS

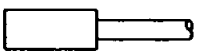

Revision	By	Approved	Date
ORIGINAL		Kercheval	12/75
Add Metric		T. Stanton	03/03
Reformatted		T. Stanton	04/06

SAN DIEGO REGIONAL STANDARD DRAWING

CATCH BASIN - TYPE G

RECOMMENDED BY THE SAN DIEGO REGIONAL STANDARDS COMMITTEE

T. Stanton 3/10/2003

Chairperson R.C.E. 19246 Date

DRAWING NUMBER D-8

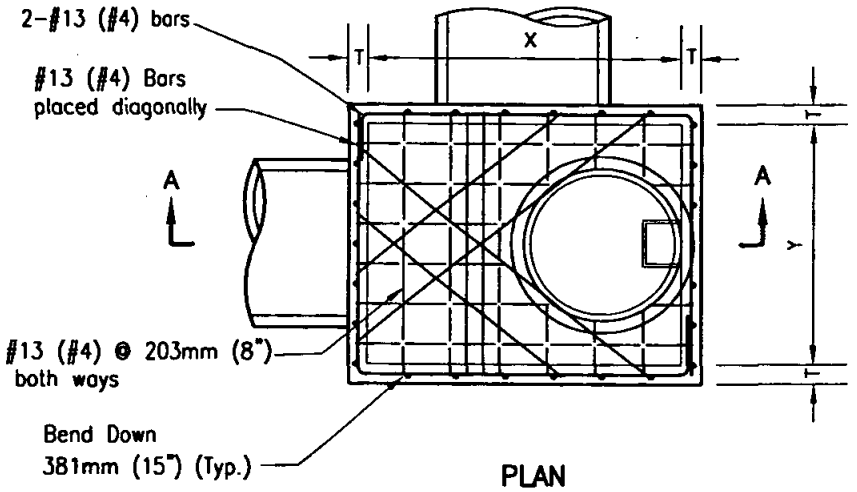

PLAN

TYPE	PIPE DIA.	X	Y	Z
A 4	up to 991mm (39")	1.22m (4')	1.22m (4')	1.83m (6')
A 5	1.1m (42") to 1.22m (48")	1.52m (5')	1.22m (4')	1.83m (6')
A 6	1.30m (51") to 1.50m (60")	1.83m (6')	1.22m (4')	1.83m (6')
A 7	1.60m (63") to 1.80m (72")	2.13m (7')	1.22m (4')	2.13m (7')
A 8	1.90m (75") to 2.13m (84")	2.44m (8')	1.22m (4')	2.44m (8')

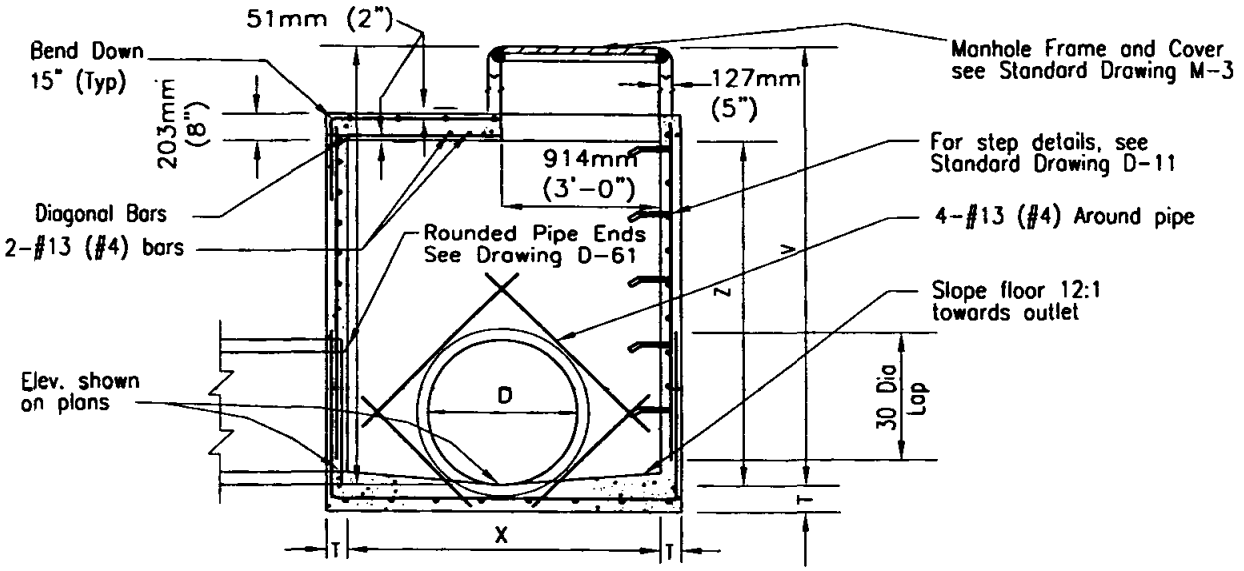

SECTION A-A

NOTES

1. See Standard Drawing D-11 for additional notes and details.
2. Concrete base shall be 332kg/M^3-C-22Mpa (560-C-3250)
3. All precast components shall be reinforced with 6.35mm (1/4") diameter steel, wound spirally on 102mm (4") centers.
4. All joints shall be set in Class C mortar.
5. Maintain 38mm (1 1/2") clear spacing between reinforcing and surface unless otherwise noted.
6. Exposed edges of concrete shall be rounded with a radius of 13mm (1/2").
7. Manhole cover to be designated "Storm Drain".

LEGEND ON PLANS

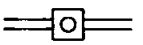

Revision	By	Approved	Date
ORIGINAL		Kercheval	12/75
Add Metric		T. Stanton	03/03
Reformatted		T. Stanton	04/06

SAN DIEGO REGIONAL STANDARD DRAWING

STORM DRAIN CLEANOUT - TYPE A

RECOMMENDED BY THE SAN DIEGO REGIONAL STANDARDS COMMITTEE

T. Stanton 3/10/2003

Chairperson R.C.E. 19246 Date

DRAWING NUMBER D-9

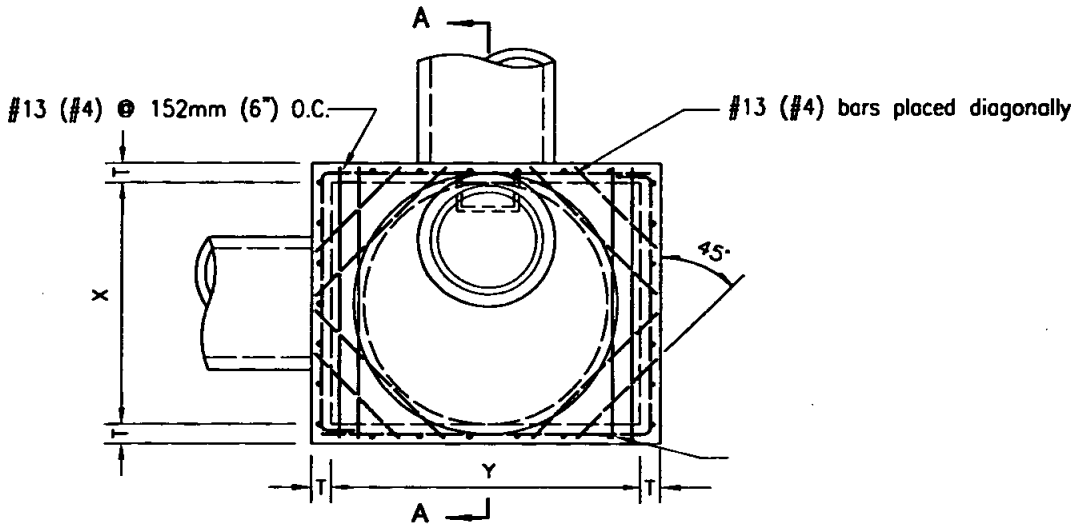

PLAN

TYPE	PIPE DIAMETER	X	Y	Z
A 4	up to 1.30m (51")	1.22m (4')	1.53m (5')	1.53m (5')
A 5	1.37m (54") to 1.52m (60")	1.22m (4')	1.83m (6')	1.83m (6')
A 6	1.60m (63") to 1.80m (69")	1.22m (4')	2.13m (7')	2.13m (7')
A 7	1.83m (72") to 2.10m (81")	1.22m (4')	2.44m (8')	2.44m (8')
A 8	2.13m (84") to 2.30m (90")	1.22m (4')	2.74m (9')	2.74m (9')

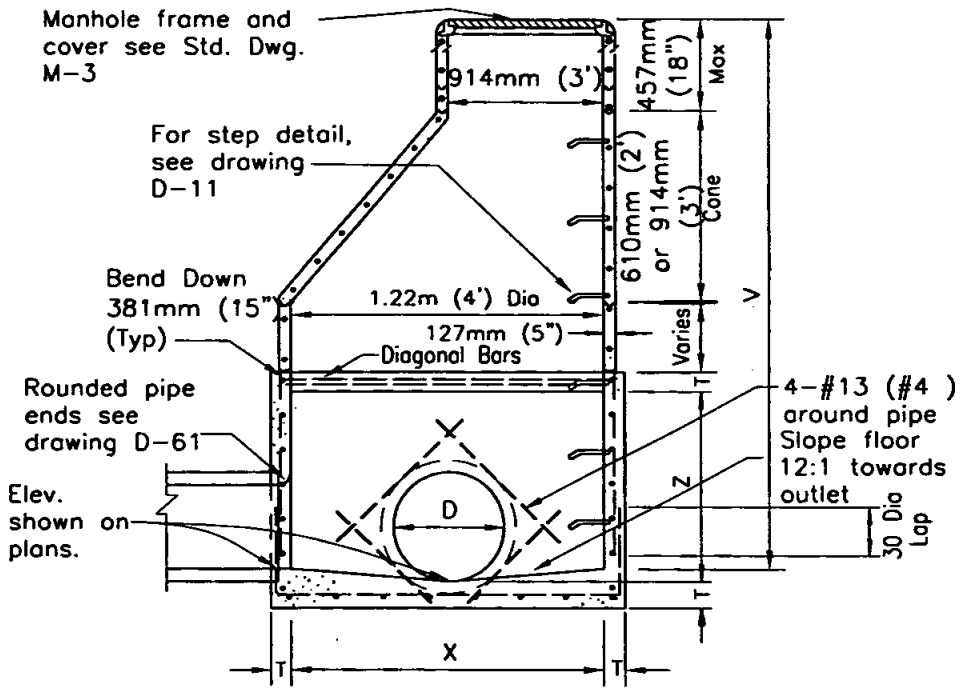

SECTION A-A

NOTES

1. See Standard Drawing D-11 for additional notes and details.
2. All joints shall be set in Class C mortar.
3. All precast components shall be reinforced with 6.35mm (1/4") diameter steel wound spirally on 102mm (4") centers.
4. Maintain 38mm (1-1/2") clear spacing between reinforcing and surface.
5. Concrete base shall be 332kg/M3-C-22-Mpa (560-C-3250).
6. Exposed edges of concrete shall be rounded with a radius of 13mm (1/2").
7. Manhole cover to be designated "Storm Drain".

LEGEND ON PLANS

= =[O]= =

Revision	By	Approved	Date
ORIGINAL		Kercheval	12/75
Add Metric		T. Stanton	03/03
Reformatted		T. Stanton	04/06

SAN DIEGO REGIONAL STANDARD DRAWING

STORM DRAIN CLEANOUT - TYPE B

RECOMMENDED BY THE SAN DIEGO REGIONAL STANDARDS COMMITTEE

T. Stanton 3/10/2003

Chairperson R.C.E. 19246 Date

DRAWING NUMBER D-10

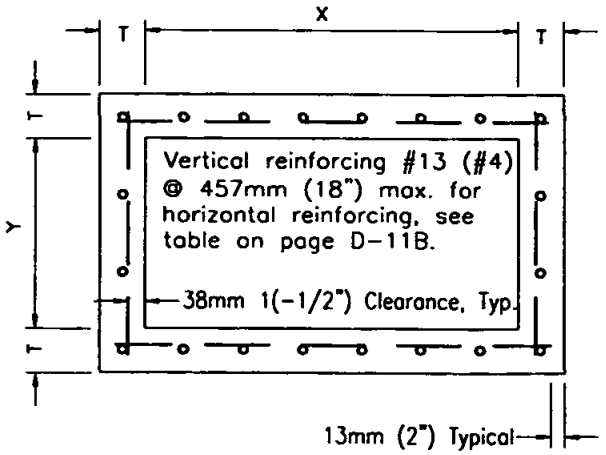

TYPICAL BOX SECTION

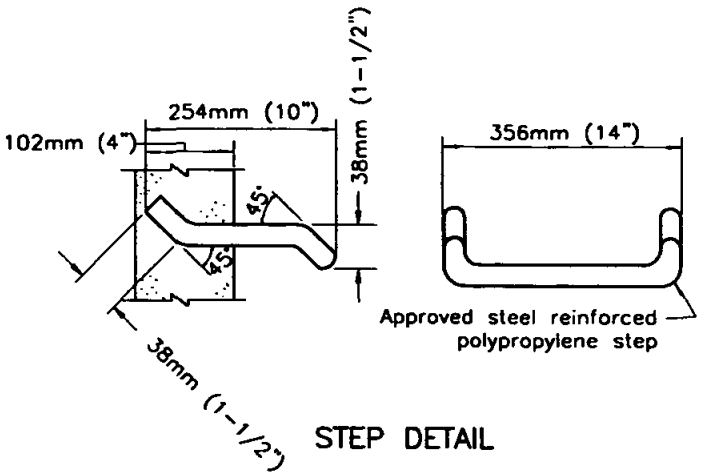

STEP DETAIL

NOTES

1. Concrete shall be 332kg/M^3-C-22-Mpa (560-C-3250) unless otherwise noted.
2. Reinforcing steel shall comply with this drawing unless otherwise specified.
3. Reinforcing steel shall be intermediate grade deformed bars conforming to latest ASTM specifications.
4. Bends shall be in accordance with latest ACI code.
5. Minimum splice length for reinforcing shall be 30 diameters.
6. Floor shall have a wood trowel finish and, except where used as junction boxes, shall have a minimum slope of 1:12 toward the outlet.
7. Depth V is measured from the top of the structure to the flowline of the box.
8. Wall thickness and reinforcing steel required may be decreased in accordance with table above.
9. Wall thickness shall be stepped on the outside of the box.
10. When the structure depth V exceeds 1.21m (4'), steps shall be cast into the wall at 381mm (15") intervals from 381mm (15") above floor to within 305mm (12") of top of structure. Where possible place steps in wall without pipe opening, otherwise over opening of smallest diameter.
11. Alternate step may be an approved steel reinforced polypropylene step.
12. Upon approval of the Agency and the Engineer, as defined by Section 6703 of the Business and Professions Code, the use of precast storm structures is acceptable as an alternate to cast-in-place. Precast units shall conform to ASTM standards and be manufactured in a permanent facility designed for that purpose.

Revision	By	Approved	Date
ORIGINAL		Kercheval	12/75
Add Metric		T. Stanton	03/03
Reformatted		T. Stanton	04/06

SAN DIEGO REGIONAL STANDARD DRAWING

INLETS AND CLEANOUTS NOTES AND DETAILS

RECOMMENDED BY THE SAN DIEGO REGIONAL STANDARDS COMMITTEE

T. Stanton 3/01/2003

Chairperson R.C.E. 19246 Date

DRAWING NUMBER **D-11A**

BOX SECTION REINFORCEMENT			
MAXIMUM SPAN X or Y	DEPTH V	THICKNESS T	HOR. & FLR. REINF.
914mm (3'-0") to 1.22m (4'-0")	1.22m (4'-0")	152mm (6")	#13 (#4) @ 457mm (18")
1.24m (4'-1") to 2.13m (7'-0")		152mm (6")	#13 (#4) @ 305mm (12")
2.16m (7'-1") to 2.44m (8'-0")		152mm (6")	#13 (#4) @ 203mm (8")
914mm (3'-0") to 1.22m (4'-0")	1.24m to 2.44m (4'-1"to 8'-0")	152mm (6")	#13 (#4) @ 457mm (18")
1.24m (4'-1") to 1.52m (5'-0")		152mm (6")	#13 (#4) @ 305mm (12")
1.55m (5'-1") to 1.83m (6'-0")		152mm (6")	#13 (#4) @ 203mm (8")
1.85m (6'-1") to 2.44m (8'-0")		152mm (6")	#13 (#4) @ 152mm (6")
914mm (3'-0") to 1.22m (4'-0")	2.46m to 3.66m (8'-1" to 12'-0")	152mm (6")	#13 (#4) @ 381mm (15")
1.24m (4'-1") to 1.52m (5'-0")		203mm (8")	#13 (#4) @ 305mm (12")
1.55m (5'-1") to 1.83m (6'-0")		203mm (8")	#13 (#4) @ 203mm (8")
1.85m (6'-1") to 2.44m (8'-0")		203mm (8")	#13 (#4) @ 152mm (6")
914mm (3'-0") to 1.22m (4'-0")	3.68m to 4.88m (12'-1" to 16'-0")	203mm (8")	#13 (#4) @ 305mm (12")
1.24m (4'-1") to 1.52m (5'-0")		203mm (8")	#13 (#4) @ 305mm (12")
1.55m (5'-1") to 1.83m (6'-0")		203mm (8")	#13 (#4) @ 203mm (8")
1.85m (6'-1") to 2.13m (7'-0")		203mm (8")	#13 (#4) @ 152mm (6")
2.13m (7'-1") to 2.44m (8'-0")		203mm (8")	#13 (#5) @ 203mm (8")
914mm (3'-0") to 1.22m (4'-0")	4.90m to 6.10m (16'-1" to 20'-0")	203mm (8")	#13 (#4) @ 305mm (12")
1.24m (4'-1") to 1.52m (5'-0")		254mm (10")	#13 (#4) @ 305mm (12")
1.55m (5'-1") to 1.83m (6'-0")		254mm (10")	#13 (#4) @ 203mm (8")
1.85m (6'-1") to 2.13m (7'-0")		254mm (10")	#13 (#4) @ 152mm (6")
2.13m (7'-1") to 2.44m (8'-0")		254mm (10")	#13 (#5) @ 203mm (8")
914mm (3'-0") to 1.22m (4'-0")	6.12m to 7.32m (20'-1" to 24'-0")	203mm (8")	#13 (#4) @ 305mm (12")
1.24m (4'-1") to 1.52m (5'-0")		254mm (10")	#13 (#4) @ 305mm (12")
1.55m (5'-1") to 1.83m (6'-0")		254mm (10")	#13 (#4) @ 203mm (8")
1.85m (6'-1") to 2.13m (7'-0")		254mm (10")	#13 (#4) @ 152mm (6")
2.13m (7'-1") to 2.44m (8'-0")		305mm (12")	#13 (#5) @ 203mm (8")

HORIZONTAL REINFORCING

Revision	By	Approved	Date
ORIGINAL		Kercheval	12/75
Add Metric		T. Stanton	03/03
Reformatted		T. Stanton	04/06

SAN DIEGO REGIONAL STANDARD DRAWING

INLETS AND CLEANOUTS NOTES AND DETAILS

RECOMMENDED BY THE SAN DIEGO REGIONAL STANDARDS COMMITTEE

T. Stanton 3/10/2003

Chairperson R.C.E. 19246 Date

DRAWING NUMBER D-11B

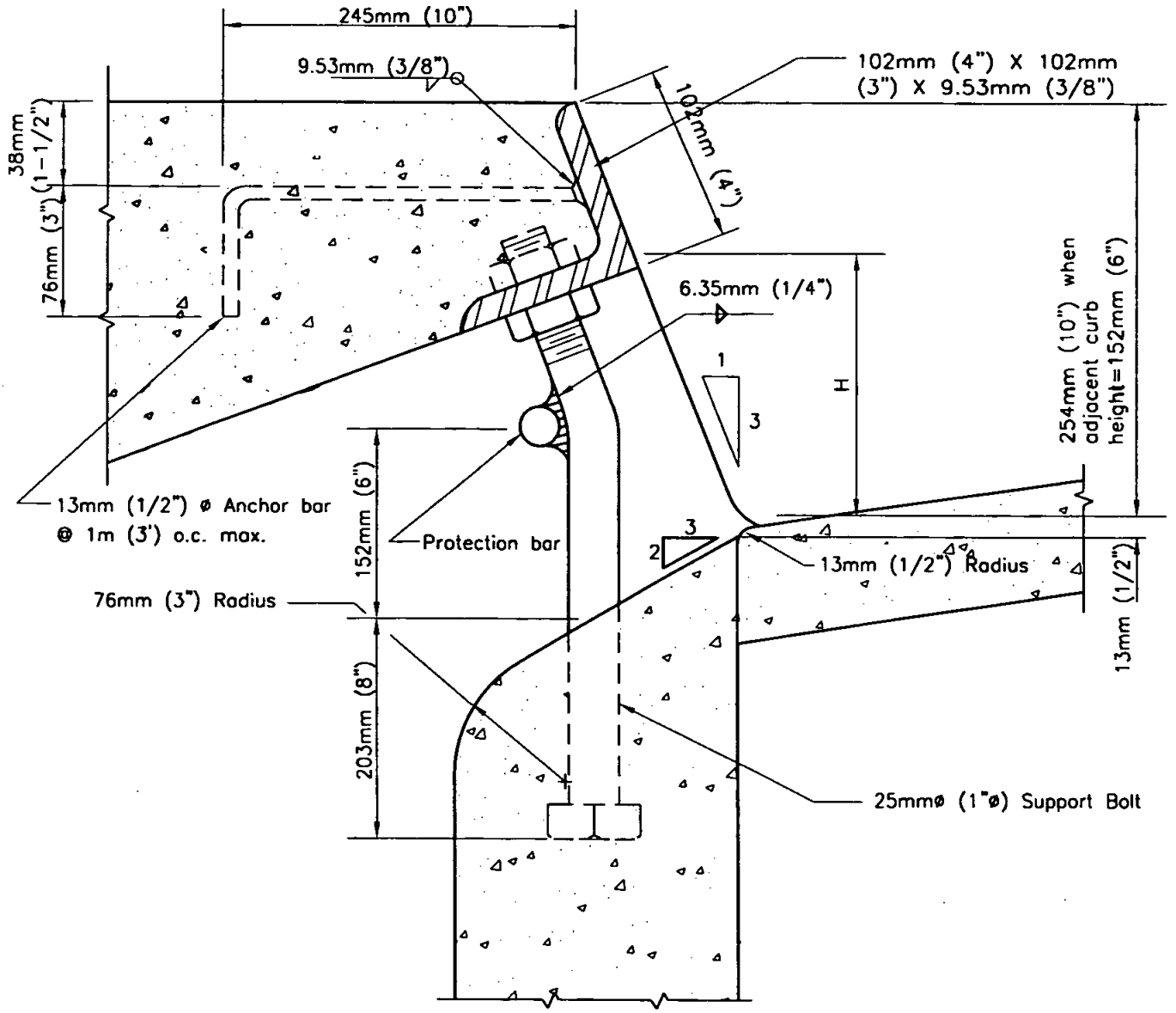

NOTES

1. Face angle shall be cast into structure continuous for the full length "L".
2. All exposed metal parts shall be hot-dipped galvanized after fabrication.
3. When curb inlet opening height (H) exceeds 152mm (6") install 25mm (1"ø) steel protection bar.
4. Install additional bars at 89mm (3-1/2") clear spacing above first bar when opening exceeds 330mm (13").
5. When curb inlet opening length exceeds 2.44m (8') install 25mm (1"ø) steel support bolts, spaced at not more than 1.52m (5') o.c.

Revision	By	Approved	Date
ORIGINAL		Kercheval	12/75
Add Metric		T. Stanton	03/03
Reformatted		T. Stanton	04/06

SAN DIEGO REGIONAL STANDARD DRAWING

CURB INLET OPENING

RECOMMENDED BY THE SAN DIEGO REGIONAL STANDARDS COMMITTEE

T. Stanton 3/10/2003

Chairperson R.C.E. 19246 Date

DRAWING NUMBER **D-12**

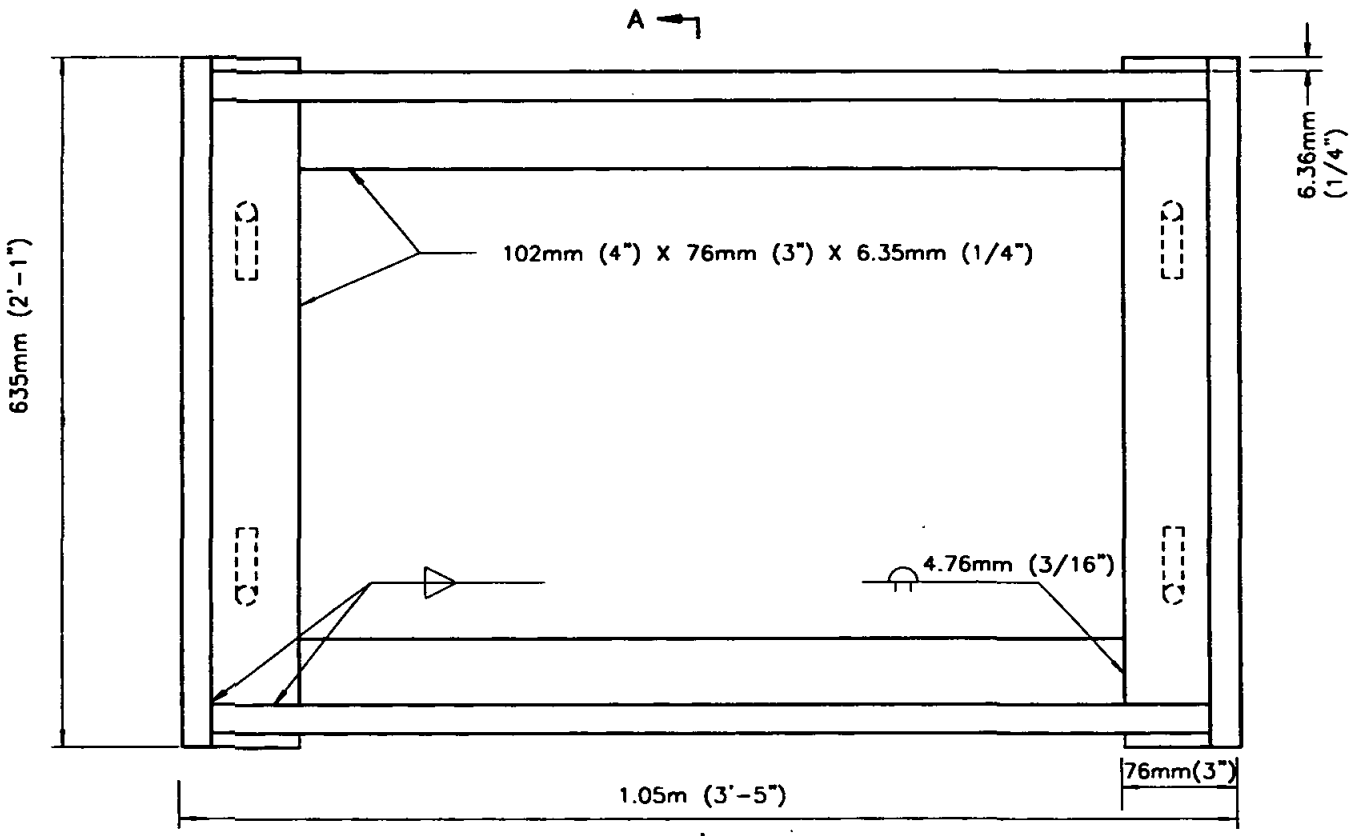

PLAN

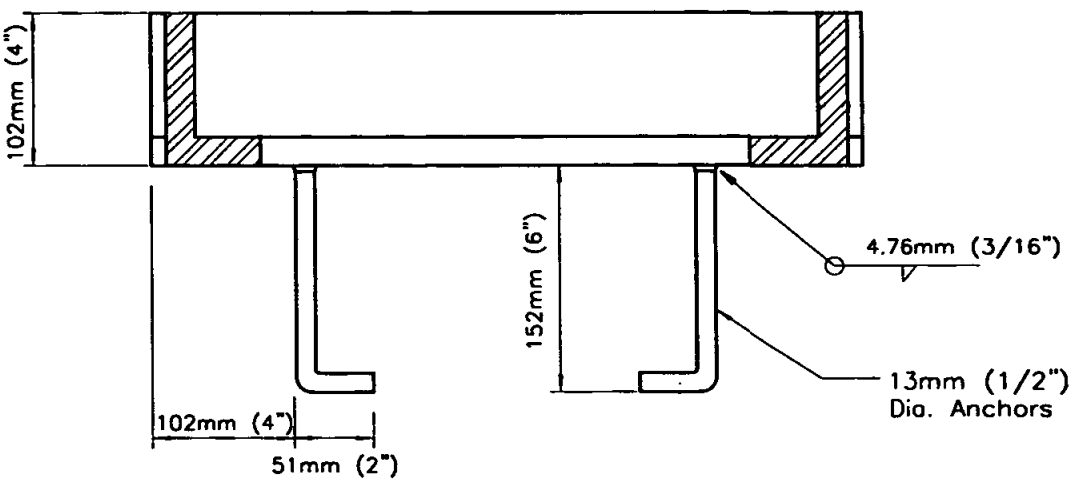

SECTION A–A

NOTE
Hot dip galvanize all parts after fabrication.

Revision	By	Approved	Date
ORIGINAL		Kercheval	12/75
Add Metric		T. Stanton	03/03
Reformatted		T. Stanton	04/06

SAN DIEGO REGIONAL STANDARD DRAWING

WELDED STEEL GRATE FRAME

RECOMMENDED BY THE SAN DIEGO REGIONAL STANDARDS COMMITTEE

T. Stanton 3/10/2003

Chairperson R.C.E. 19246 Date

DRAWING NUMBER **D-13**

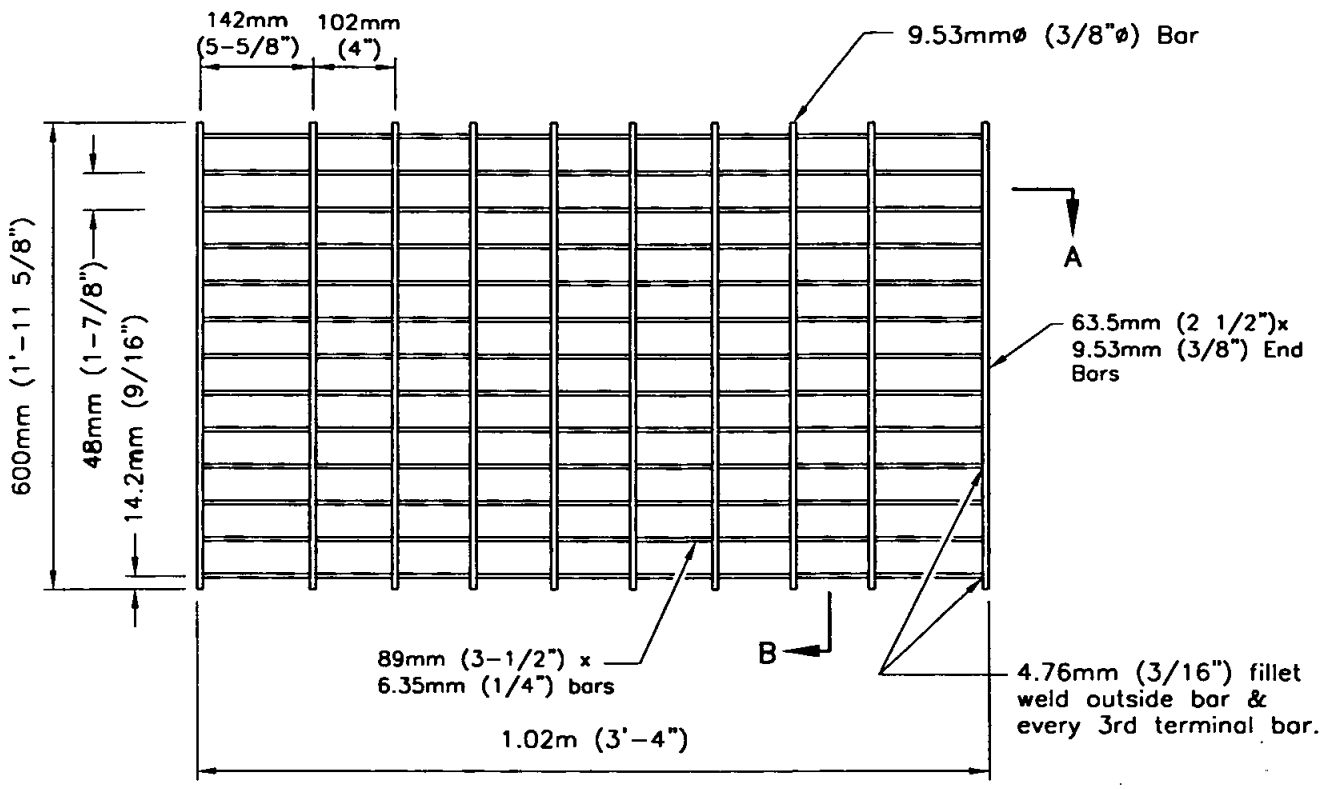

PLAN

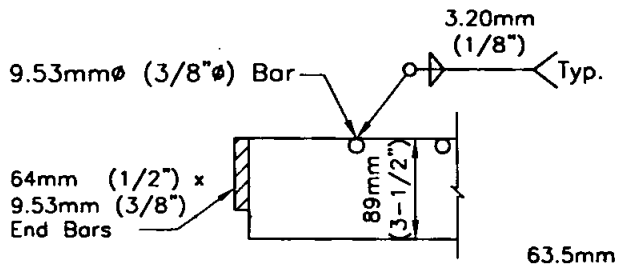

SECTION A

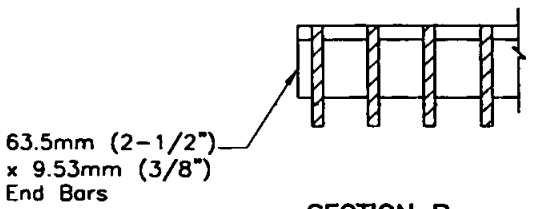

SECTION B

NOTES
1. Hot dip galvanize all parts after fabrication.
2. Dimensions to centerline of bars unless otherwise noted.
3. Weight: 64kg (143 pounds).
4. Not to be used in pedestrian areas.

Revision	By	Approved	Date
ORIGINAL		Kercheval	12/75
Add Metric		T. Stanton	03/03
Reformatted		T. Stanton	04/06

SAN DIEGO REGIONAL STANDARD DRAWING

DRAINAGE STRUCTURE GRATE

RECOMMENDED BY THE SAN DIEGO REGIONAL STANDARDS COMMITTEE

T. Stanton 3/10/2003

Chairperson R.C.E. 19246 Date

DRAWING NUMBER D-15

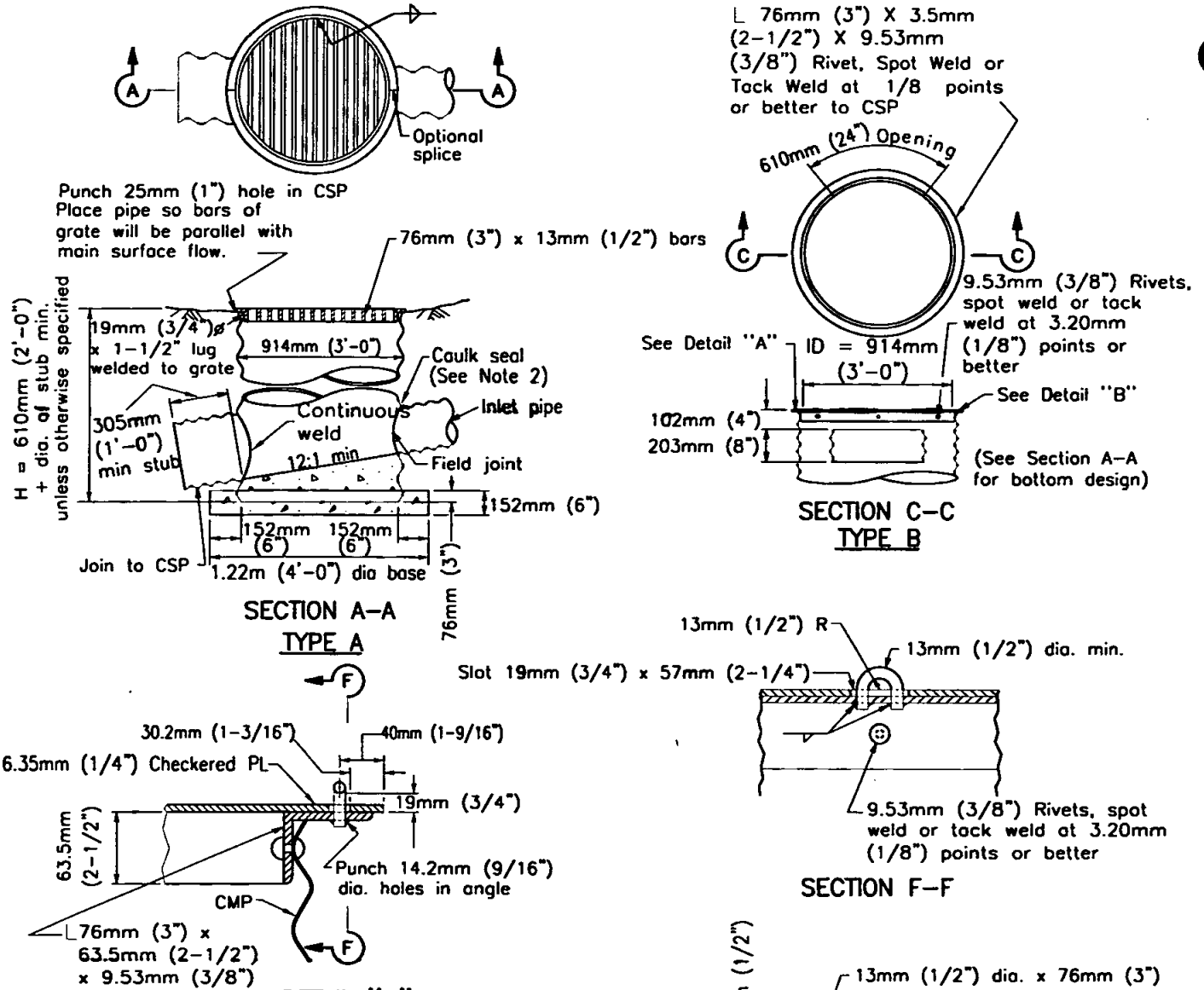

NOTES

1. All components shall be galvanized.
2. Inlet and outlet pipes shall be set at factory and positioned as shown on plans
3. Ladders and Steps: None required where "H" is 1.10m (3'-6") or less. Where "H" is between 1.10m (3'-6") and 1.50m (4'-11") place one step + 406mm (16") above the floor. If "H " is 1.52m (5') or more install a ladder placing lowest rung 406mm (16") above the floor and the highest rung not more than 356mm (14") below top of inlet. Place single step or ladder in wall with wall opening.
4. See Standard Drawing D-17 for additional details.
5. Grate to be provided when specified.
6. Grate detail shall be as shown on Standard Drawing D-17 unless otherwise approved by Agency.

Revision	By	Approved	Date
ORIGINAL		Kercheval	12/75
Add Metric		T. Stanton	03/03
Reformatted		T. Stanton	04/06

SAN DIEGO REGIONAL STANDARD DRAWING

CORRUGATED STEEL PIPE INLETS TYPES A AND B

RECOMMENDED BY THE SAN DIEGO REGIONAL STANDARDS COMMITTEE

T. Stanton 3/01/2003

Chairperson R.C.E. 19246 Date

DRAWING NUMBER **D-16**

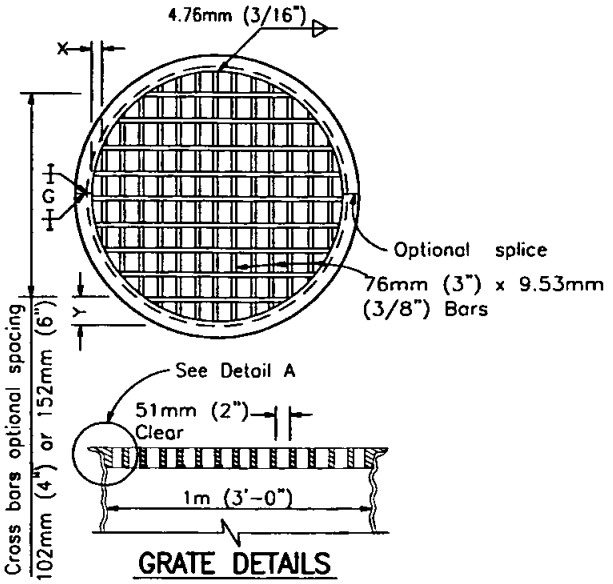

GRATE DETAILS

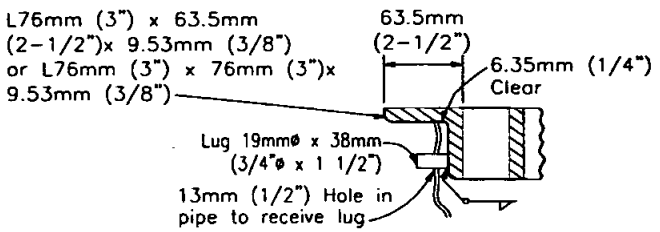

DETAIL A

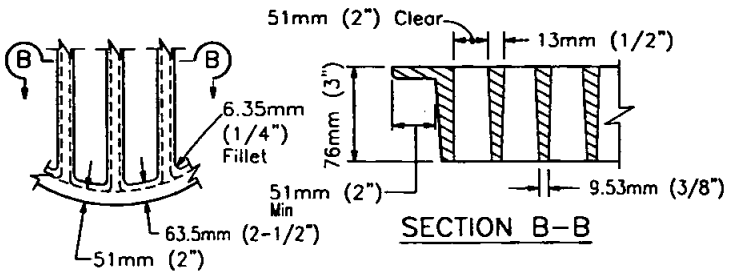

SECTION B-B

ALTERNATIVE CAST NODULAR IRON GRATE
OR CAST STEEL GRATE

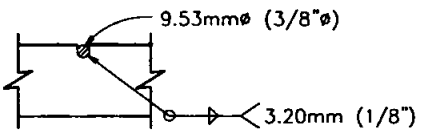

3/8"ø Cross bars may be fillet welded, resistance welded or electroforged to bearing bars.

CROSS BAR DETAIL TYPE
WELDED STEEL GRATE

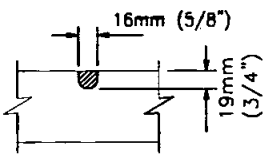

CROSS BAR DETAIL
ALTERNATIVE CAST NODULAR
IRON GRATE OR CAST STEEL GRATE

GRATE BAR SPACING TABLE

TYPE	NO. OF BARS	CLEAR BAR SPACING	X	Y	
				102mm (4") SPACING	152mm (6") SPACING
Welded Steel	15	51mm (2")	14.2mm (9/16")	95mm (3-3/4")	146mm (5-3/4")
Cast	13	51mm (2")	54mm (2-1/8")	95mm (3-3/4")	146mm (5-3/4")

Revision	By	Approved	Date
ORIGINAL		Kercheval	12/75
Add Metric		T. Stanton	03/03
Reformatted		T. Stanton	04/06

SAN DIEGO REGIONAL STANDARD DRAWING

CORRUGATED STEEL PIPE INLETS, DETAILS

RECOMMENDED BY THE SAN DIEGO REGIONAL STANDARDS COMMITTEE

T. Stanton 3/10/2003

Chairperson R.C.E. 19246 Date

DRAWING NUMBER D-17A

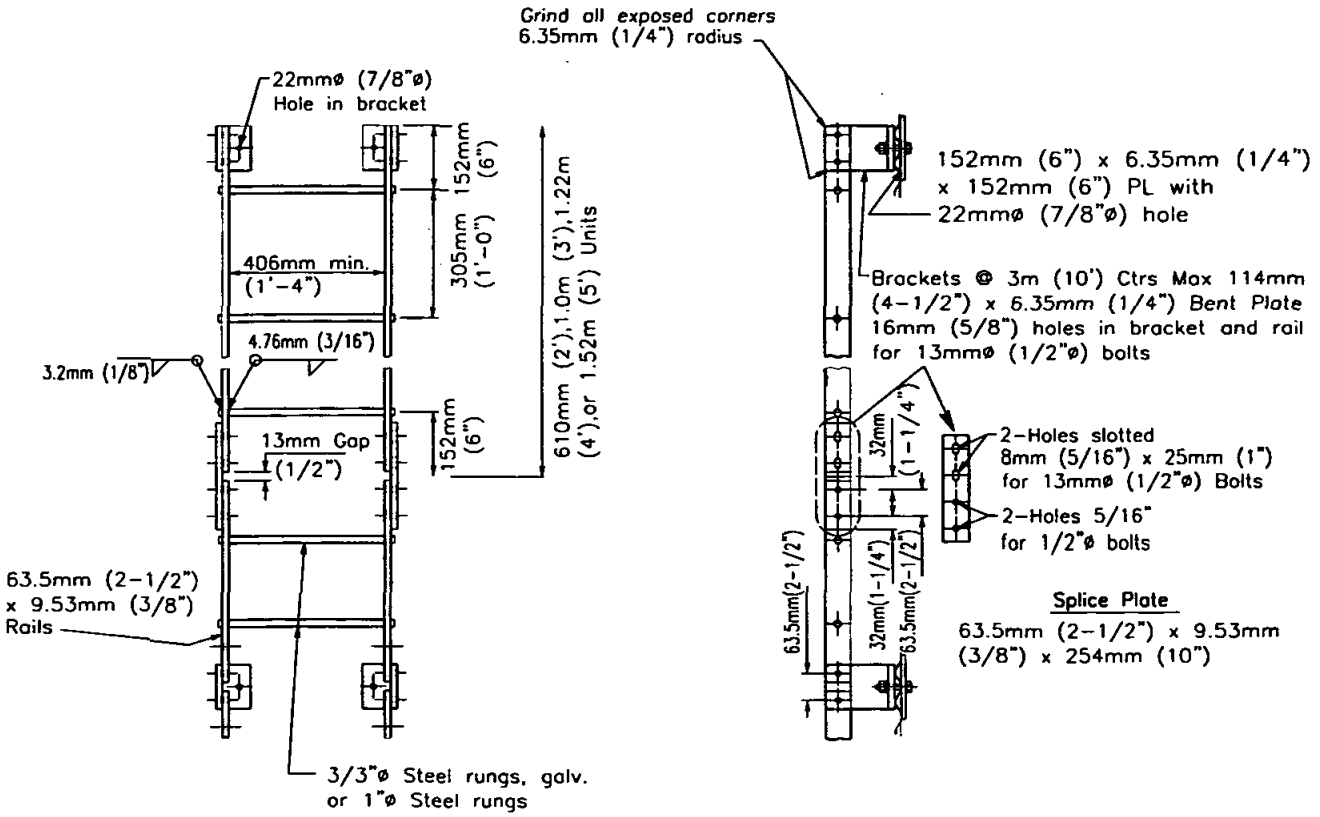

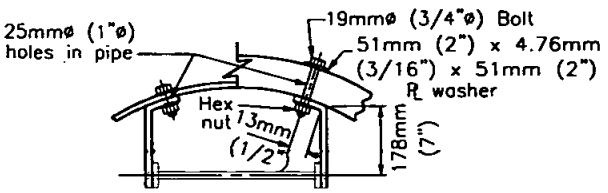

LADDER DETAIL

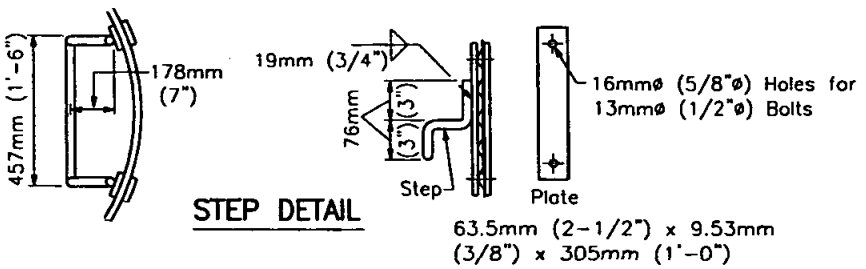

STEP DETAIL

Revision	By	Approved	Date
ORIGINAL		Kercheval	12/75
Add Metric		T. Stanton	03/03
Reformatted		T. Stanton	04/06

SAN DIEGO REGIONAL STANDARD DRAWING

CORRUGATED STEEL PIPE INLETS, DETAILS

RECOMMENDED BY THE SAN DIEGO REGIONAL STANDARDS COMMITTEE

T. Stanton 3/01/2003

Chairperson R.C.E. 19246 Date

DRAWING NUMBER **D-17B**

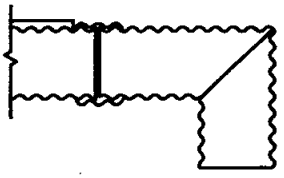

ELBOW

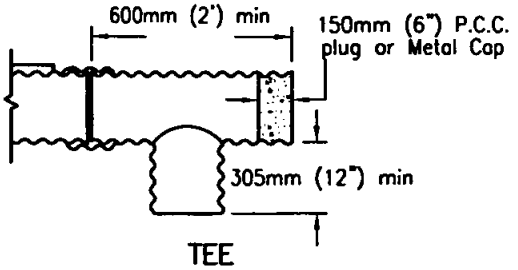

TEE

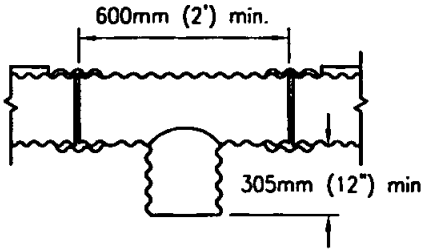

TEE–SAG CONDITION

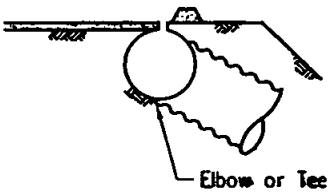

OVERSIDE DRAIN

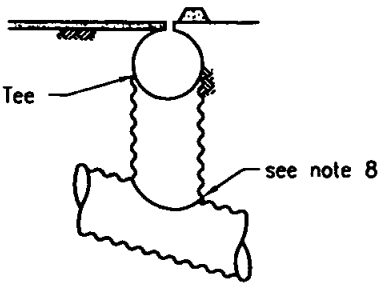

RISER

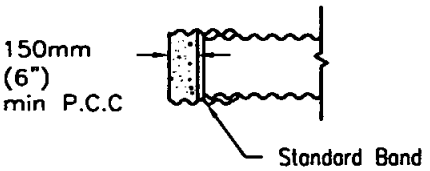

BAND PLUG

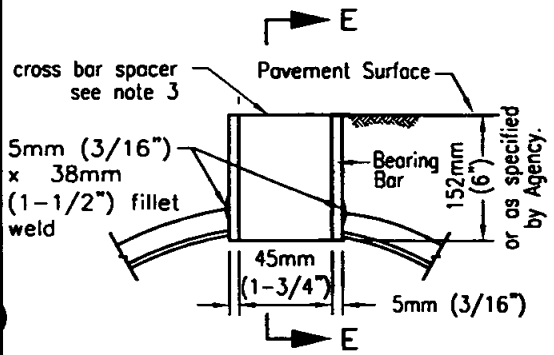

SECTION D–D
GRATE SLOT DETAIL

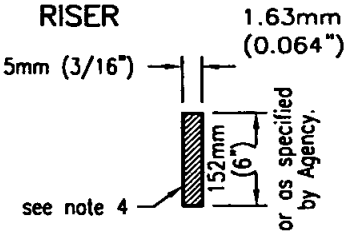

SECTION E–E

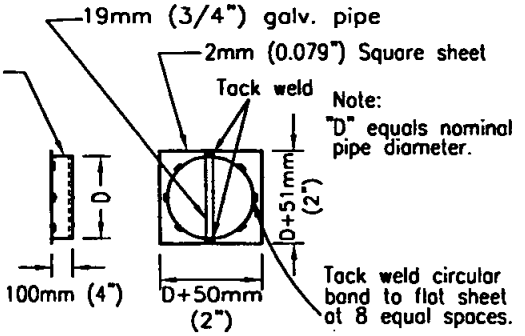

METAL CAP DETAIL

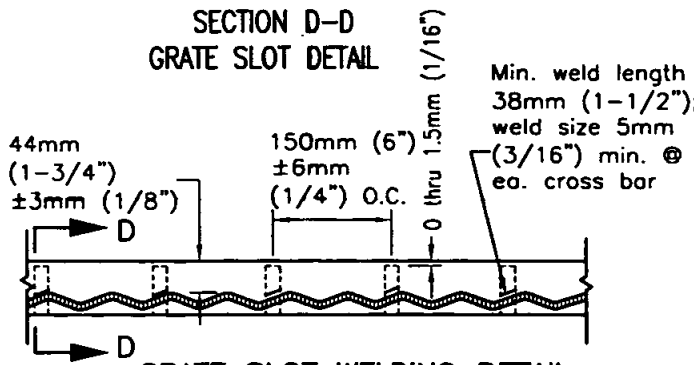

GRATE SLOT WELDING DETAIL

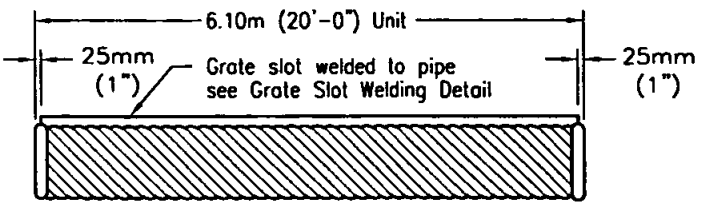

GRATE SLOT DRAIN

NOTES

1. Drain seams may be constructed by riveting or resistance spot-welding, continuous helical lock seam or helical welding seam at equal centers.
2. Each drain section shall be assembled with standard coupling bands.
3. Cross bar spacer of grate shall be pressure fused or plug welded to bearing bars in such a manner as to develop the strength of the cross bar spacer.
4. Cross bar spacer (Section E–E) may differ from that shown provided section area is equal or greater.
5. Grate material shall be a weldable grade of steel complying to the requirements of ASTM A 36.
6. The maximum variance from a straight line from the extreme top corners of the bearing bar shall be 13mm (1/2") in 6.1m (20').
7. Installation lengths shall be 3m (10') or multiples thereof.
8. Either field joint sealed with a pliable mixture of sand, portland cement and emulsified asphalt (Mixture of 1 part portland cement, 3 – 5 parts sand and 1-1/2 parts SSI emulsified asphalt), or continuous weld.

Revision	By	Approved	Date
ORIGINAL		Kercheval	12/75
Add Metric		T. Stanton	03/03
Reformatted		T. Stanton	04/06

SAN DIEGO REGIONAL STANDARD DRAWING

SLOTTED CORRUGATED STEEL PIPE DRAINS 300mm (12") THROUGH 600mm (24")

RECOMMENDED BY THE SAN DIEGO REGIONAL STANDARDS COMMITTEE

T. Stanton 3/01/2003

Chairperson R.C.E. 19246 Date

DRAWING NUMBER **D-18**

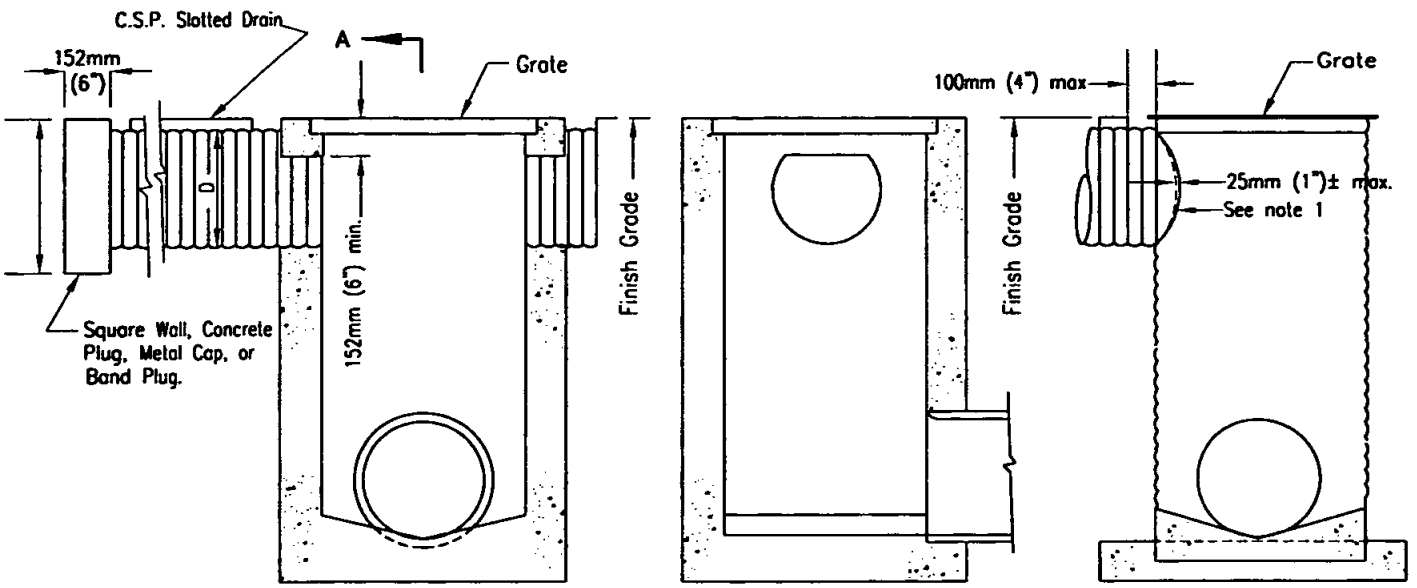

A

SECTION A–A

C.S.P. INLET

CATCH BASIN

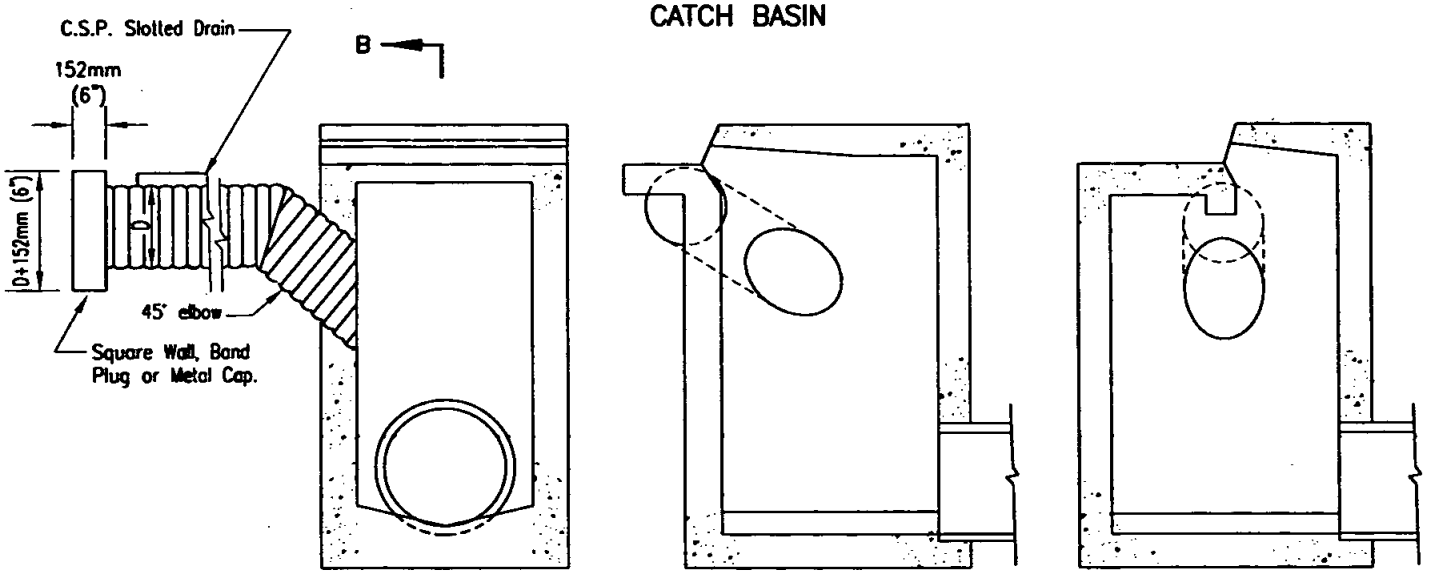

B

SECTION B–B

ALTERNATE SECTION B–B

INLETS

NOTES

1. Either field joint with a pliable mixture of sand, portland cement emulsified asphalt (mixture of 1 part portland cement, 3–5 parts sand, and 1–1/2 parts SSI emulsified asphalt), or continuous weld.
2. See Standard Drawing D–18 for additional notes and details.

Revision	By	Approved	Date
ORIGINAL		Kercheval	12/75
Add Metric		T. Stanton	03/03
Reformatted		T. Stanton	04/06

SAN DIEGO REGIONAL STANDARD DRAWING

SLOTTED DRAIN CONNECTIONS TO STANDARD INLETS

RECOMMENDED BY THE SAN DIEGO REGIONAL STANDARDS COMMITTEE

T. Stanton 3/10/2003

Chairperson R.C.E. 19246 Date

DRAWING NUMBER **D-19**

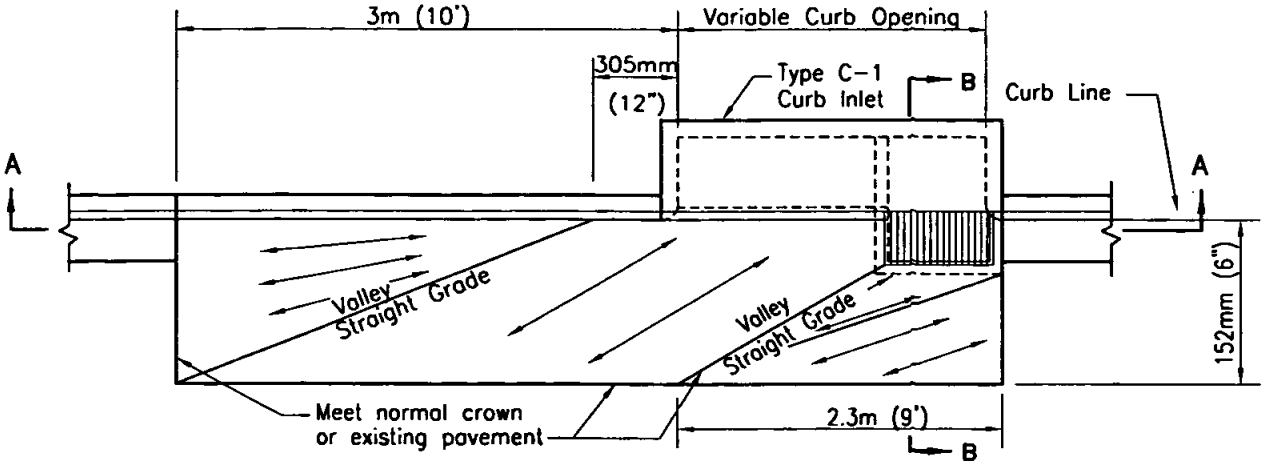

PLAN

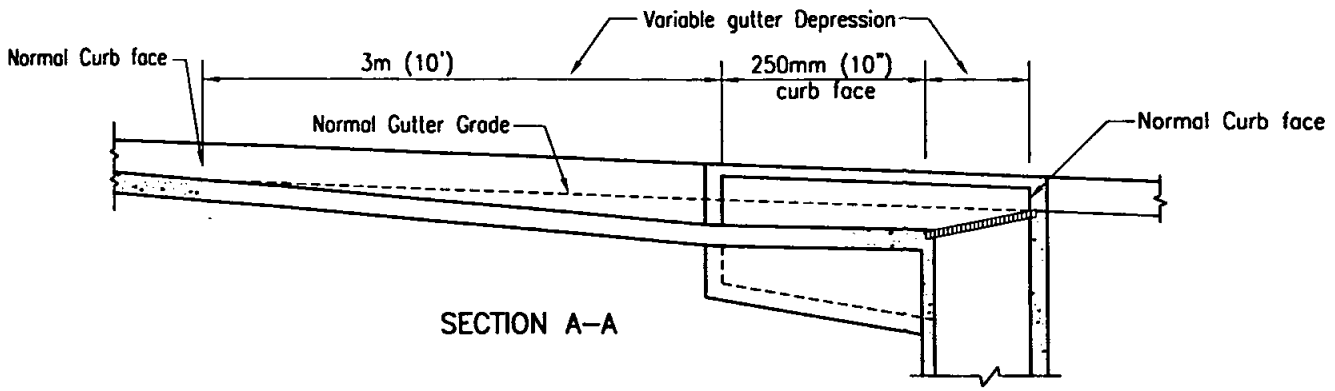

SECTION A–A

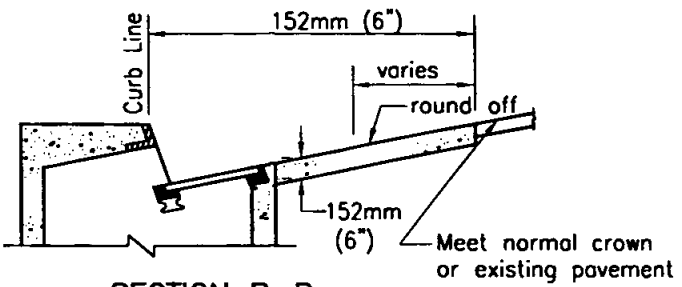

SECTION B–B

NOTES

1. Curb and apron to be placed monolithically.
2. Use of false header at valleys and slope break line is optional.
3. Extend vertical steel from inlet structure into concrete apron as required.
4. Screed Direction ⟶
5. Concrete shall be 308kg/M³ C-17 Mpa (520-C-2500)

LEGEND ON PLANS

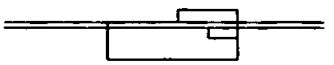

Revision	By	Approved	Date
ORIGINAL		Kercheval	12/75
Add Metric		T. Stanton	03/03
Reformatted		T. Stanton	04/06

SAN DIEGO REGIONAL STANDARD DRAWING

CONCRETE APRON FOR CURB INLET

RECOMMENDED BY THE SAN DIEGO REGIONAL STANDARDS COMMITTEE

T. Stanton 3/10/2003

Chairperson R.C.E. 19246 Date

DRAWING NUMBER **D-20**

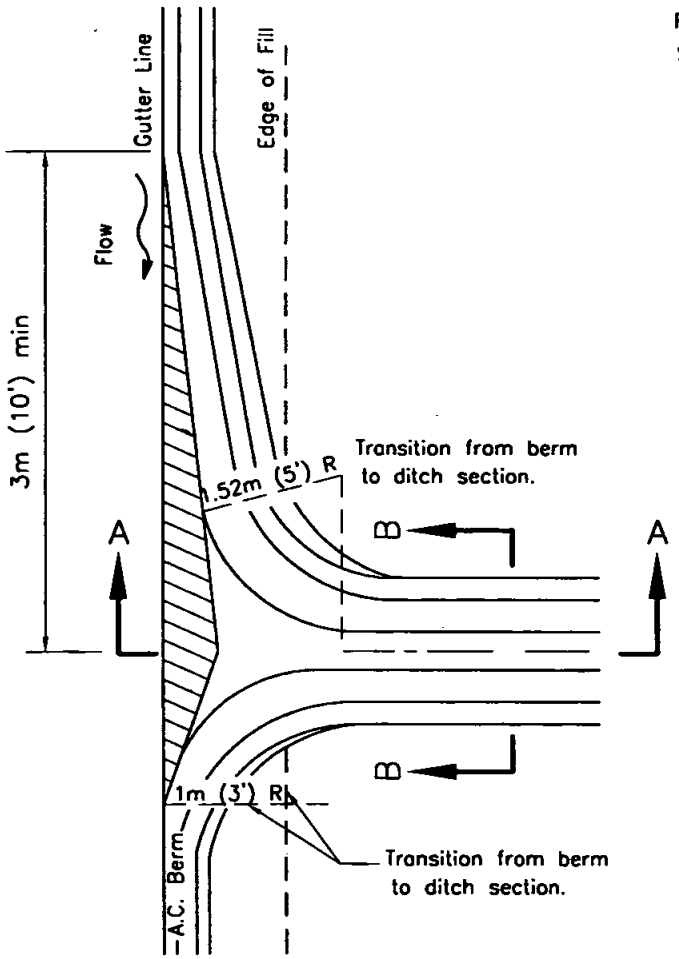

PLAN

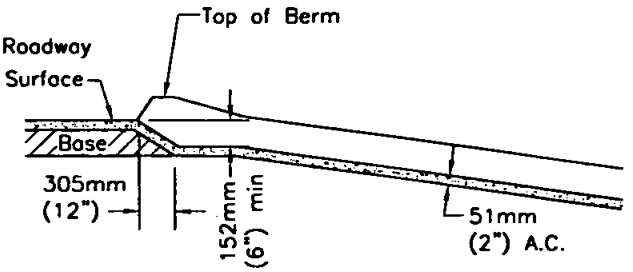

SECTION A–A

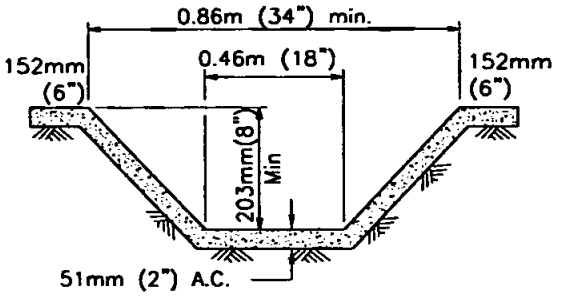

NOTE

1. Cross sectional area of ditch may be round or trapezoidal.

SECTION B–B

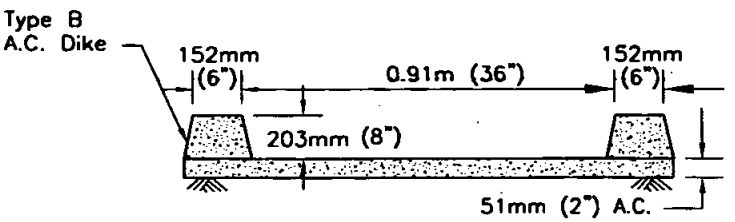

ALTERNATE SECTION B–B

NOTE

1. A.C. spillway may be used when fill is 3m (10') or less, and where fill slope 1-1/2:1 or flatter.
2. Use 3m (10') min. length of gutter transition on each side of downdrain in sag condition.
3. A round sectional area of equal flow capacity may be used.

LEGEND ON PLANS

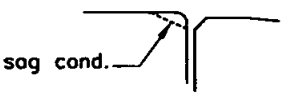

Revision	By	Approved	Date
ORIGINAL		Kercheval	12/75
Add Metric		T. Stanton	03/03
Reformatted		T. Stanton	04/06

SAN DIEGO REGIONAL STANDARD DRAWING

ASPHALT CONCRETE SPILLWAY

RECOMMENDED BY THE SAN DIEGO REGIONAL STANDARDS COMMITTEE

T. Stanton 3/01/2003

Chairperson R.C.E. 19246 Date

DRAWING NUMBER D-22

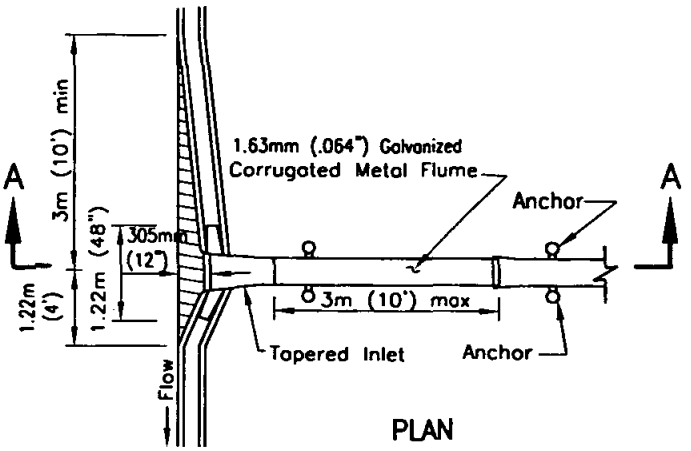

PLAN

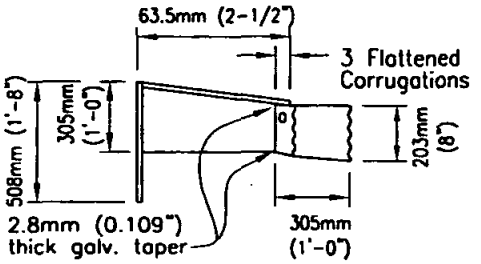

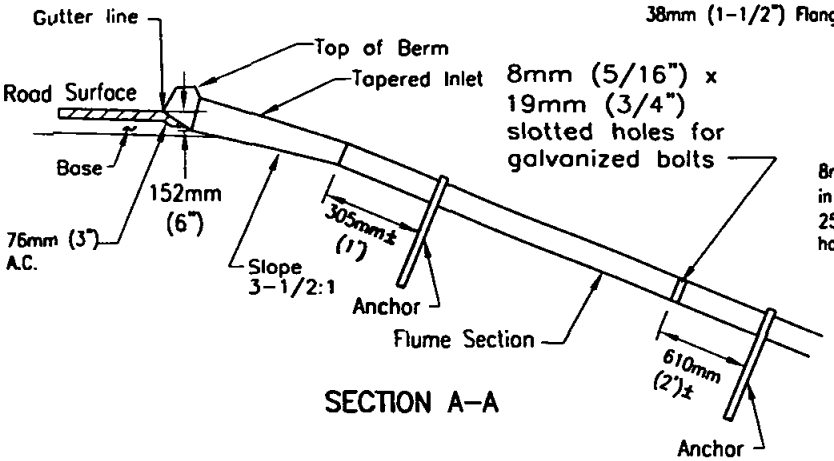

SECTION A–A

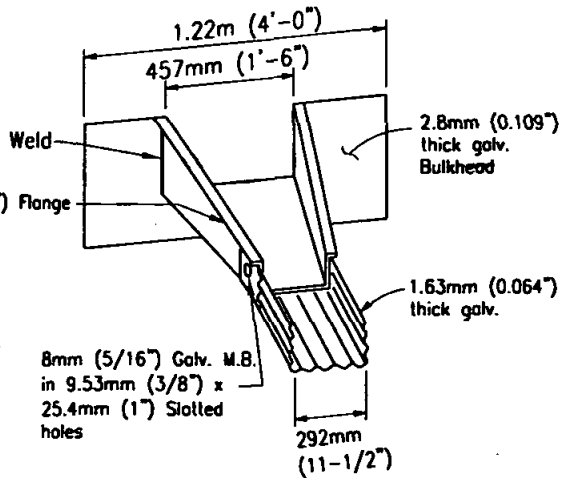

TAPERED INLET

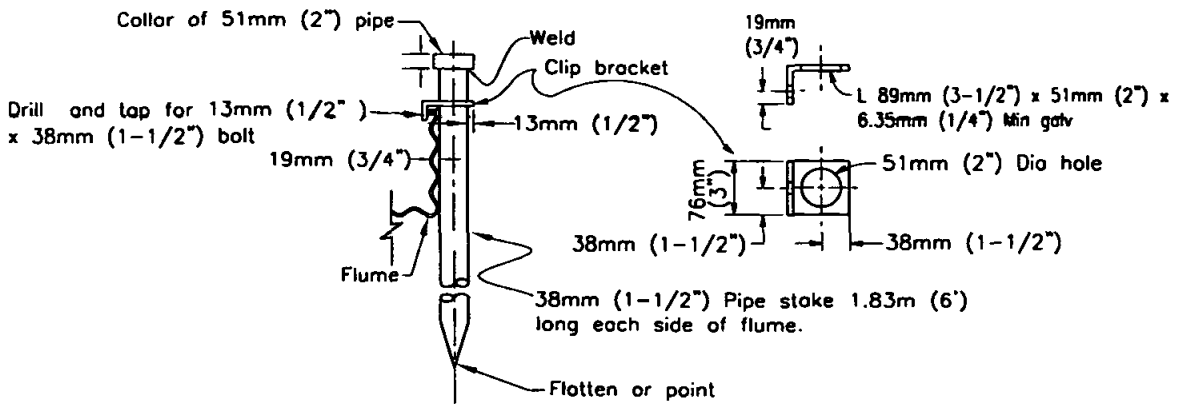

ANCHOR–DETAIL

NOTES

1. Downdrain flume may be used where fill slope is 1 1/2:1 or flatter.
2. Use 3m (10') min. length of gutter transition on each side of downdrain in sag condition.
3. All metal parts to be galvanized after fabrication.

LEGEND ON PLANS

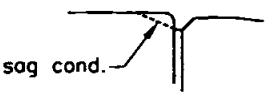

Revision	By	Approved	Date
ORIGINAL		Kercheval	12/75
Add Metric		T. Stanton	03/03
Reformatted		T. Stanton	04/06

SAN DIEGO REGIONAL STANDARD DRAWING

TAPERED INLET AND DOWNDRAIN FLUME

RECOMMENDED BY THE SAN DIEGO REGIONAL STANDARDS COMMITTEE

T. Stanton 3/10/2003

Chairperson R.C.E. 19246 Date

DRAWING NUMBER **D-23**

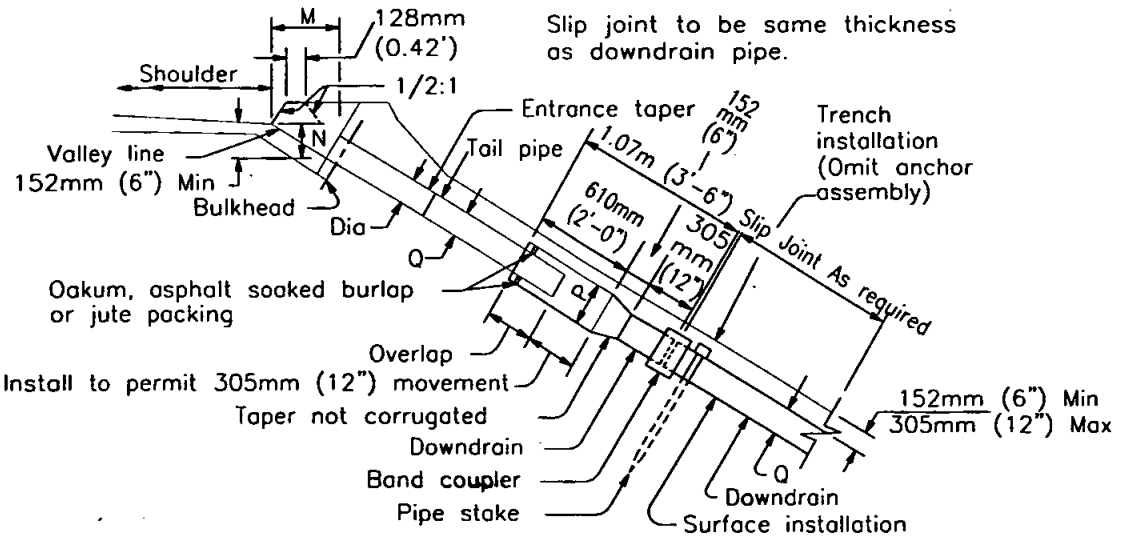

SECTION A–A

CMP dimensions as tabulated below

P	254mm (10")	381mm (15")	457mm (18")	533mm (21")	686mm (27")
Q	203mm (8")	305mm (12")	381mm (15")	457mm (18")	610mm (24")

DIAMETER	MINIMUM L	M	N
203mm (8")	3.0 m (10')	457mm (18")	203mm (8")
305mm (12")	4.57m (15')	508mm (20")	305mm (12")
381mm (15")	7.62m (25')	610mm (24")	381mm (15")
457mm (18")	9.14m (30')	762mm (30")	406mm (16")
610mm (24")	12.2m (40')	914mm (36")	457mm (18")

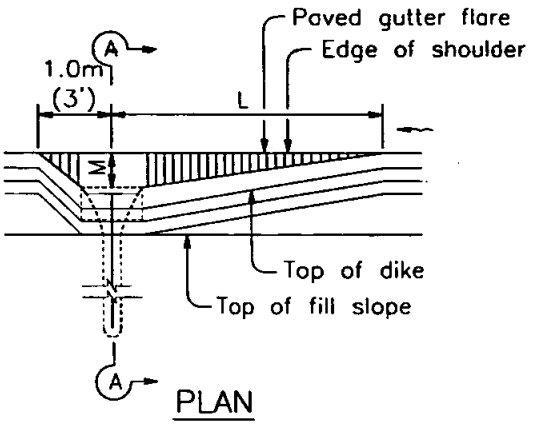

PLAN

NOTES

1. Cable, slip joint or anchor assembly to be placed when specified.
2. Slip joint to be omitted when completely buried.

Revision	By	Approved	Date
ORIGINAL		Kercheval	12/75
Add Metric		T.Stanton	03/03
Reformatted		T.Stanton	04/06

SAN DIEGO REGIONAL STANDARD DRAWING

ENTRANCE TAPER AND DOWNDRAIN PIPE

RECOMMENDED BY THE SAN DIEGO REGIONAL STANDARDS COMMITTEE

T.A. Stanton 3/10/2003

Chairperson R.C.E. 19246 Date

DRAWING NUMBER **D-24A**

Slip joint to be same thickness as downdrain pipe.

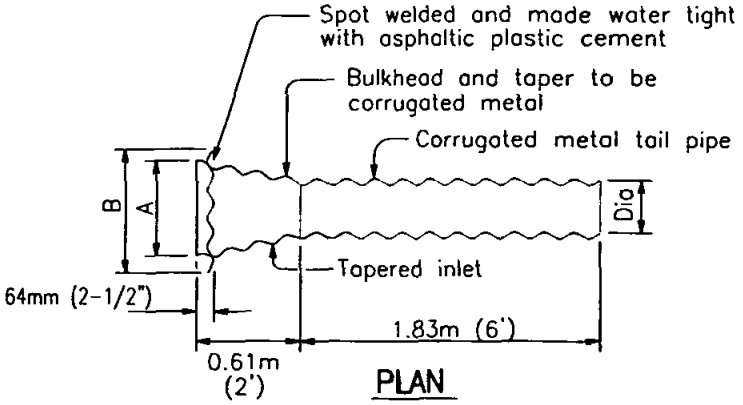

PLAN

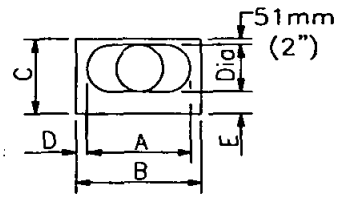

END VIEW

Bulkhead and taper of same thickness as tail pipe with 0.079" max.
Tail pipe of same thickness as downdrain pipe.

ENTRANCE TAPER
ALTERNATIVE A

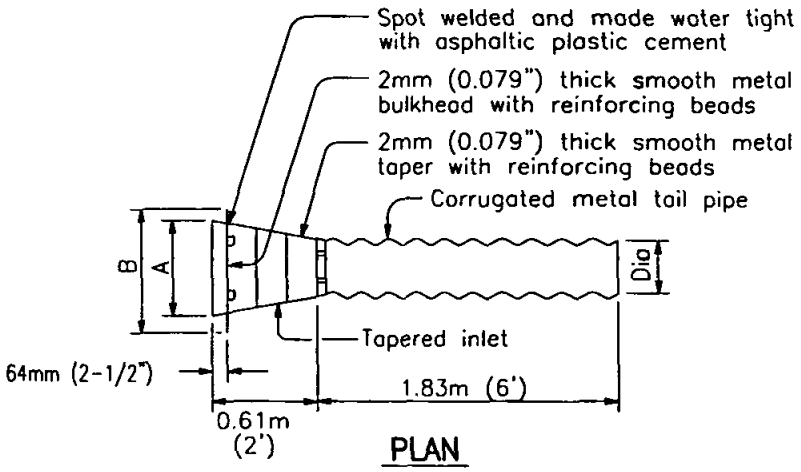

PLAN

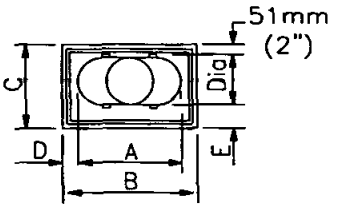

END VIEW

Tail pipe of same thickness as downdrain pipe.

ENTRANCE TAPER
ALTERNATIVE B

Revision	By	Approved	Date
ORIGINAL		Kercheval	12/75
Add Metric		T.Stanton	03/03
Reformatted		T.Stanton	04/06

SAN DIEGO REGIONAL STANDARD DRAWING

ENTRANCE TAPER AND DOWNDRAIN PIPE

RECOMMENDED BY THE SAN DIEGO REGIONAL STANDARDS COMMITTEE

T.Stanton 3/10/2003

Chairperson R.C.E. 19246 Date

DRAWING NUMBER **D-24B**

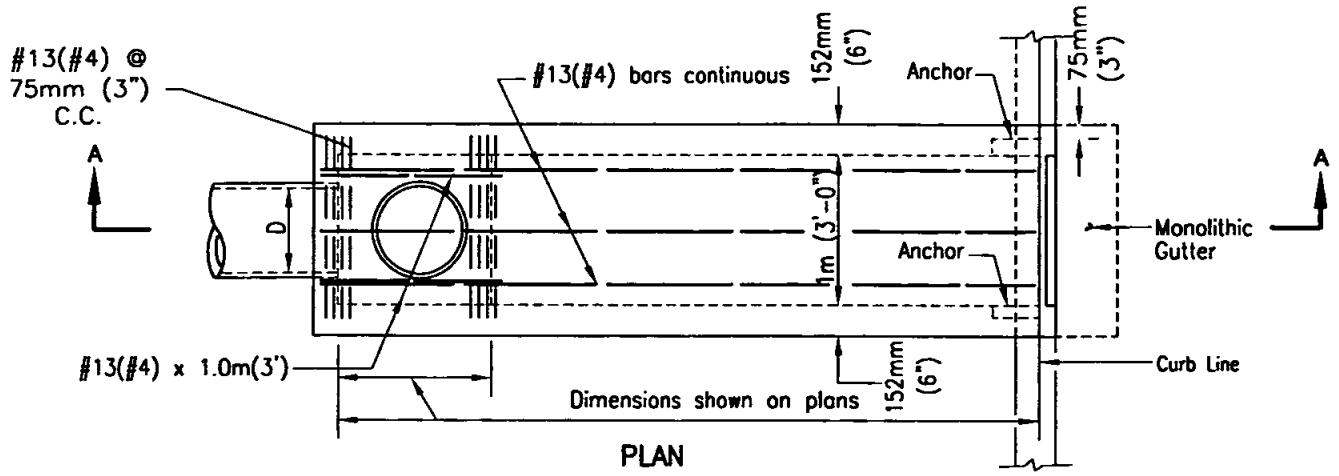

PLAN

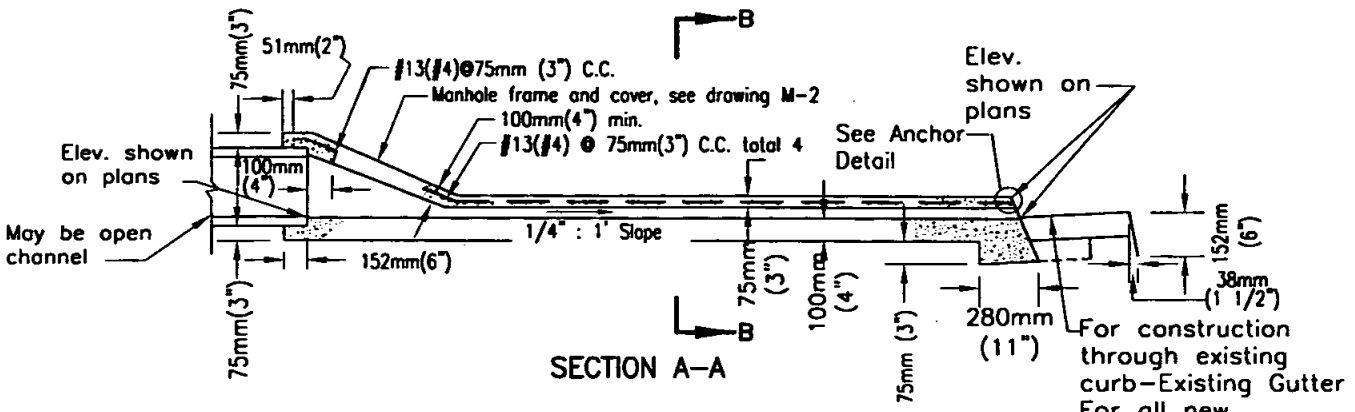

SECTION A–A

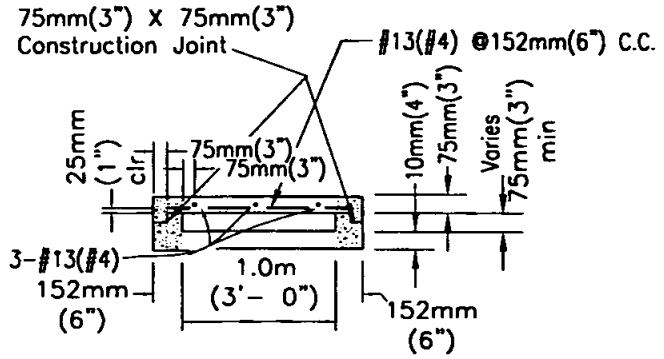

SECTION B–B

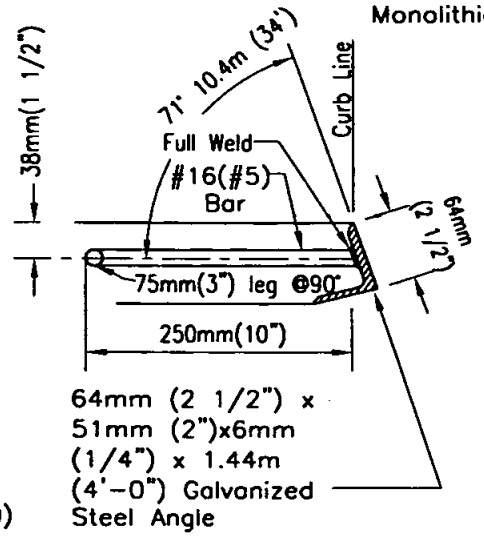

ANCHOR DETAIL

NOTES

1. Concrete shall be 332 kg/M³ –C–22Mpa (560–C–3250)
2. D=inside diameter of pipe or depth of channel.
3. Section to be sloped laterally with top conforming to the grades of the existing sidewalk and curb.
4. Manhole frame and cover may be deleted with open channel.
5. Trowel finish top surface and reproduce markings of existing sidewalk and curb.
6. Trowel finish floor of outlet.

LEGEND ON PLANS

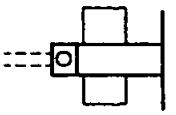

Revision	By	Approved	Date
ORIGINAL		Kercheval	12/75
Add Metric		T.Stanton	03/03
Reformatted		T.Stanton	04/06

SAN DIEGO REGIONAL STANDARD DRAWING

CURB OUTLET - TYPE A

RECOMMENDED BY THE SAN DIEGO REGIONAL STANDARDS COMMITTEE

T.A. Stanton 3/01/2003

Chairperson R.C.E. 19246 Date

DRAWING NUMBER D-25

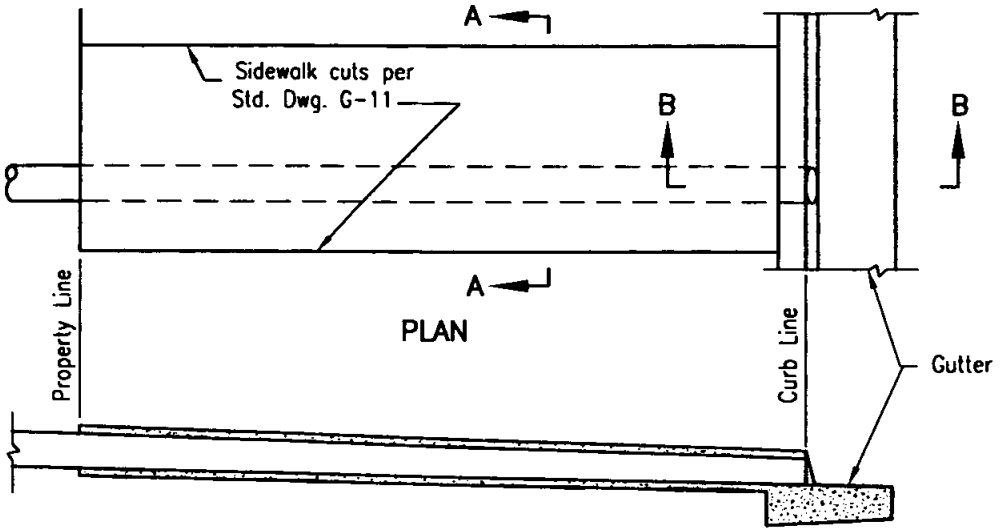

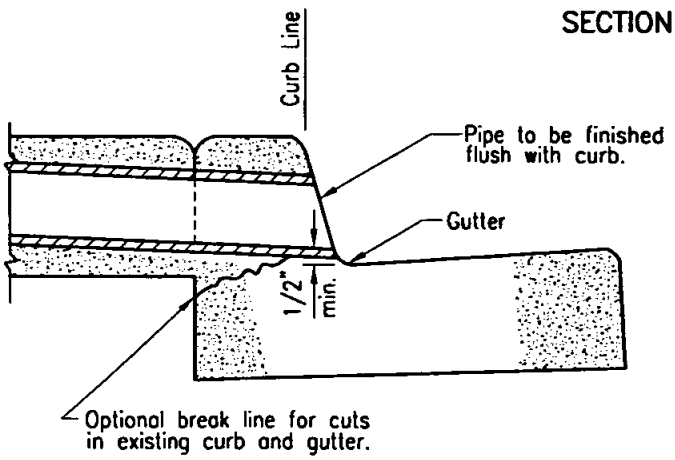

SECTION B–B

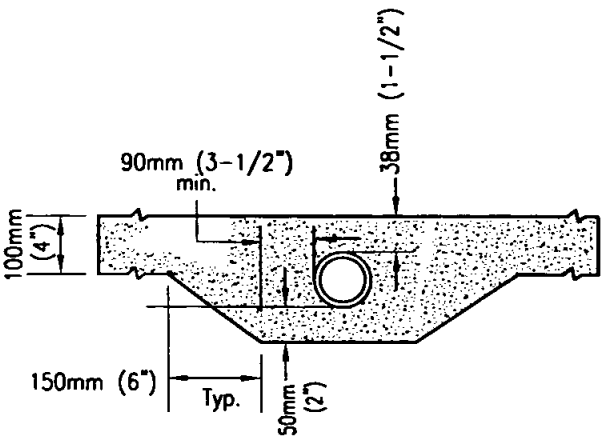

SECTION A–A

APPROVED DRAIN PIPE SIZES	
PIPE SIZE	CURB HEIGHT
75mm (3")	150mm (6") to 200mm (8") CURB FACE
100mm (4")	200mm (8") CURB FACE
150mm (6")	250mm (10") CURB FACE

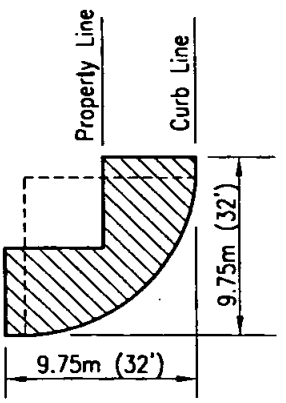

Drain shall not occupy
the hatched area

BLOCK CORNER

NOTES

1. Pipe shall be one continuous length from property line to curb line.
2. Multiple pipes to be set a minimum distance of D/2 apart.
3. Concrete shall be 308kg/M^3–C–17 Mpa (520–C–2500)
4. Pipe shall be circular rigid plastic, or approved equal.
5. Coring of existing curb may be used as an alternative.

Revision	By	Approved	Date
ORIGINAL		Kercheval	12/75
Add Metric		T.Stanton	03/03
Reformatted		T.Stanton	04/06

SAN DIEGO REGIONAL STANDARD DRAWING

SIDEWALK UNDERDRAIN PIPE

RECOMMENDED BY THE SAN DIEGO REGIONAL STANDARDS COMMITTEE

T.A. Stanton 3/01/2003

Chairperson R.C.E. 19246 Date

DRAWING NUMBER **D-27**

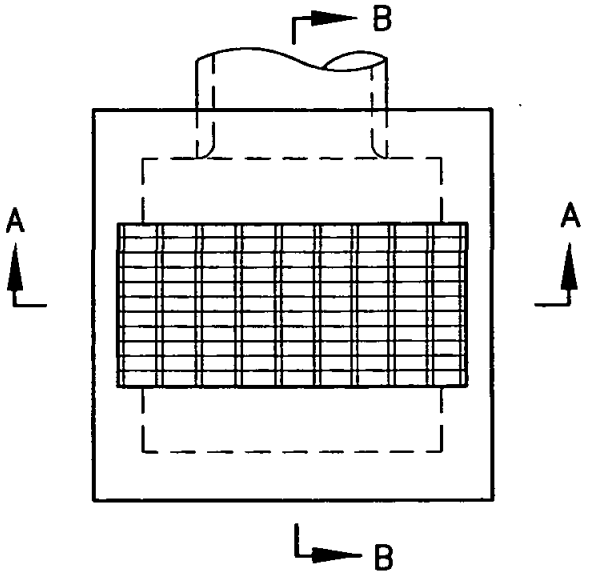

PLAN

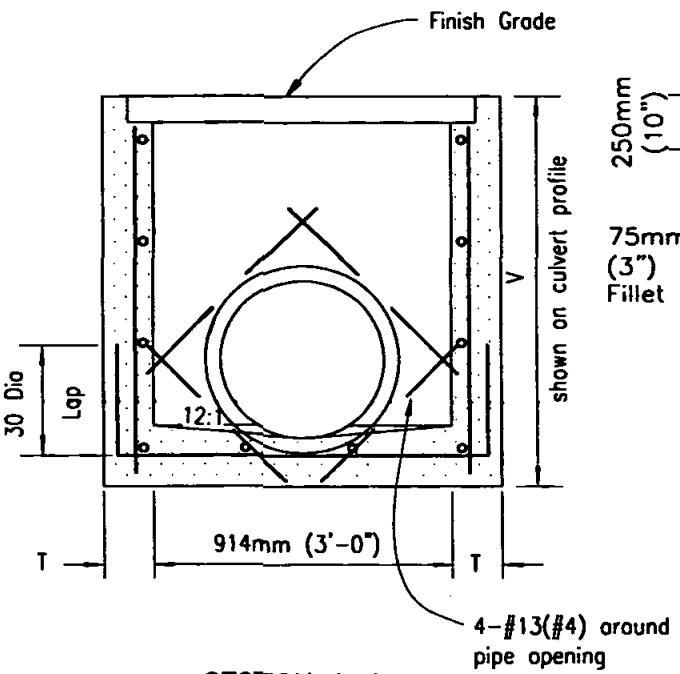

SECTION A–A

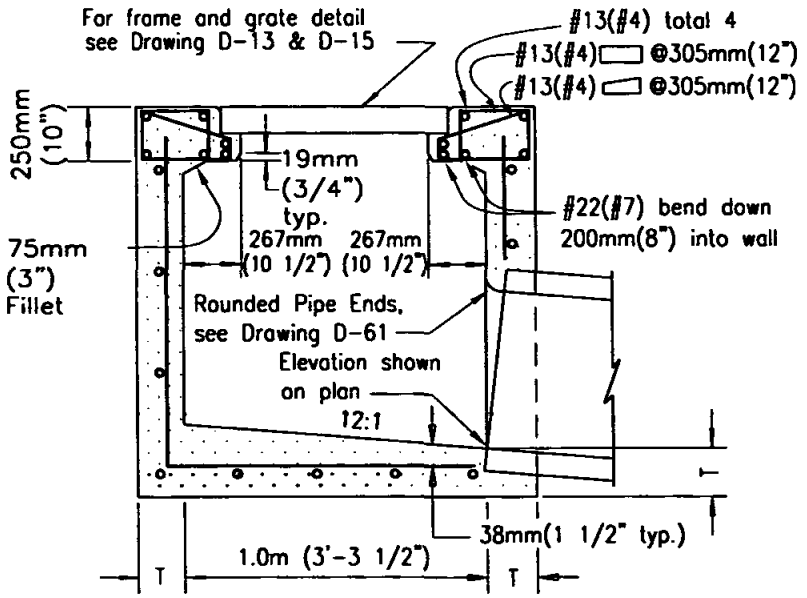

SECTION B–B

NOTES

1. See Standard Drawing D-11 for additional notes and details.
2. When V exceeds 1.2m (4'), steps shall be installed

LEGEND ON PLANS

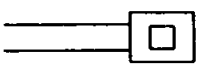

Revision	By	Approved	Date
ORIGINAL		Solomon	7/79
Add Metric		T. Stanton	03/03
Reformatted		T. Stanton	04/06

SAN DIEGO REGIONAL STANDARD DRAWING

CATCH BASIN - TYPE I

RECOMMENDED BY THE SAN DIEGO REGIONAL STANDARDS COMMITTEE

T. Stanton 3/01/2003

Chairperson R.C.E. 19246 Date

DRAWING NUMBER D-29

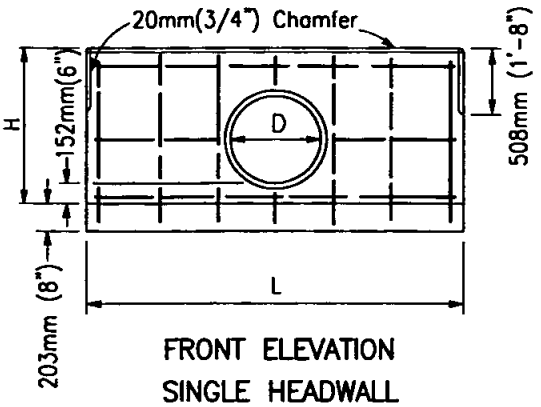

FRONT ELEVATION
SINGLE HEADWALL

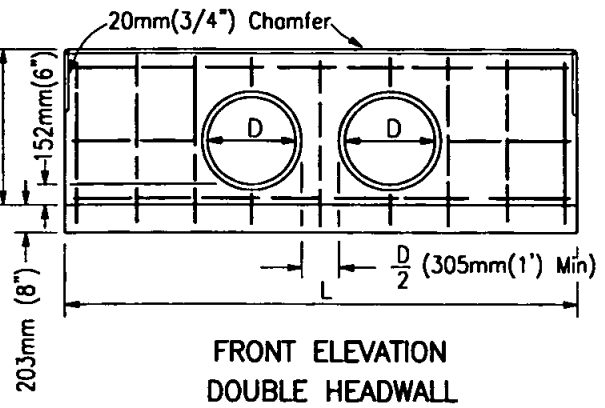

FRONT ELEVATION
DOUBLE HEADWALL

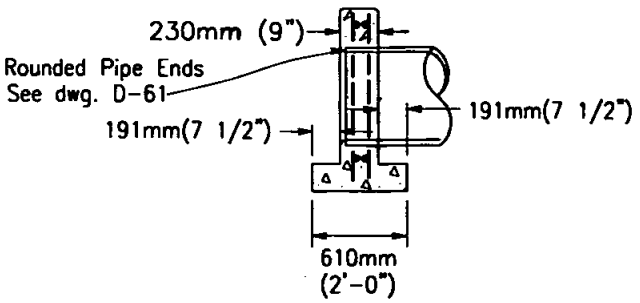

SECTION, SINGLE &
DOUBLE HEADWALLS

D	H	SINGLE						DOUBLE					
		L	Steel kg	Lbs.	Concrete cu m	C.Y.		L	Steel kg	Lbs.	Concrete cu m	C.Y.	
300mm(12")	813mm(2'-8")	1.52m (5'-0")	15.9	(35)	0.46	(0.60)		2.44m (8'-0")	22.7	(50)	0.72	(0.94)	
375mm(15")	889mm(2'-11")	1.83m (6'-0")	18.1	(40)	0.57	(0.75)		2.90m (9'-6")	27.2	(60)	0.89	(1.17)	
450mm(18")	965mm(3'-2")	2.13m (7'-0")	22.7	(50)	0.70	(0.91)		3.20m (10'-6")	34.0	(75)	1.03	(1.35)	
525mm(21")	1.04m (3'-5")	2.29m (7'-6")	27.2	(60)	0.78	(1.02)		3.51m (11'-6")	40.8	(90)	1.16	(1.52)	
600mm(24")	1.12m (3'-8")	2.59m (8'-6")	34.0	(75)	0.92	(1.20)		3.81m (12'-6")	45.4	(100)	1.32	(1.72)	
675mm(27")	1.19m (3'-11")	2.90m (9'-6")	38.6	(85)	1.06	(1.39)		4.27m (14'-0")	52.2	(115)	1.53	(2.00)	
750mm(30")	1.27m (4'-2")	3.05m (10'-0")	38.6	(85)	1.16	(1.52)		4.57m (15'-0")	57.2	(126)	1.69	(2.21)	
825mm(33")	1.35m (4'-5")	3.35m (11'-0")	45.4	(100)	1.32	(1.73)		4.88m (16'-0")	59.0	(130)	1.85	(2.42)	
900mm(36")	1.42m (4'-8")	3.65m (12'-0")	47.6	(105)	1.49	(1.95)		5.18m (17'-0")	65.8	(145)	2.03	(2.65)	
975mm(39")	1.50m (4'-11")	3.81m (12'-6")	59.0	(130)	1.60	(2.09)		5.49m (18'-0")	77.1	(170)	2.20	(2.88)	
1050mm (42")	1.57m (5'-2")	4.11m (13'-6")	63.5	(140)	1.79	(2.34)		5.79m (19'-0")	84.0	(185)	2.39	(3.13)	
1150mm (45")	1.65m (5'-5")	4.42m (14'-6")	68.0	(150)	1.99	(2.60)		6.10m (20'-0")	88.5	(195)	2.58	(3.38)	
1225mm (48")	1.73m (5'-8")	4.57m (15'-0")	72.6	(160)	2.10	(2.75)		6.40m (21'-0")	90.7	(200)	2.78	(3.64)	
1300mm (51")	1.80m (5'-11")	4.88m (16'-0")	81.6	(180)	2.32	(3.03)		6.86m (22'-6")	102	(225)	3.07	(4.02)	
1375mm (54")	1.88m (6'-2")	5.18m (17'-0")	86.2	(190)	2.53	(3.31)		7.16m (23'-6")	109	(240)	3.29	(4.30)	

NOTES

1. Concrete shall be 332 kg/M^3 -C-22Mpa (560-C-3250)
2. All reinforcing shall be #13(#4) bars. All vertical and horizontal tie bars @ 457mm(18") maximum spacing.

LEGEND ON PLANS

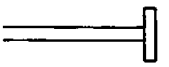

Revision	By	Approved	Date
ORIGINAL		Kercheval	12/75
Add Metric		T. Stanton	03/03
Reformatted		T. Stanton	04/06

SAN DIEGO REGIONAL STANDARD DRAWING

STRAIGHT HEADWALL - TYPE A
(CIRCULAR PIPE)

RECOMMENDED BY THE SAN DIEGO REGIONAL STANDARDS COMMITTEE

T. Stanton 3/10/2003

Chairperson R.C.E. 19246 Date

DRAWING NUMBER D-30

Revision	By	Approved	Date
ORIGINAL		Kercheval	12/75
Add Metric	T. Stanton	T. Stanton	03/03
Reformatted	T. Stanton		04/06

SAN DIEGO REGIONAL STANDARD DRAWING

STRAIGHT HEADWALL - TYPE A

(C.S.P. -ARCH)

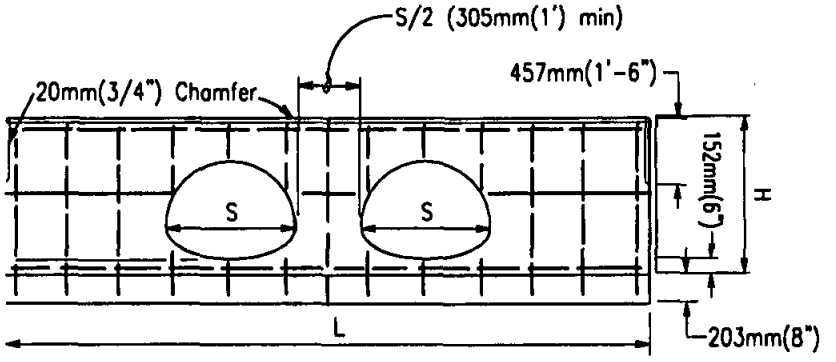

ELEVATION – DOUBLE HEADWALL

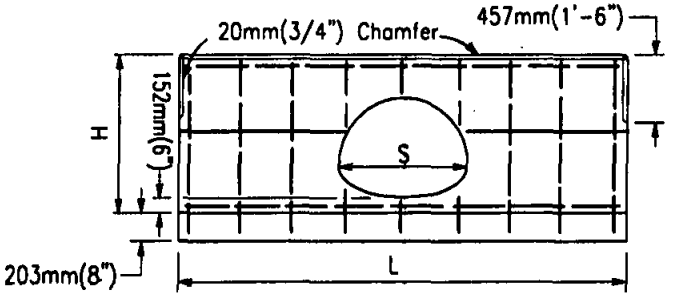

ELEVATION – SINGLE HEADWALL

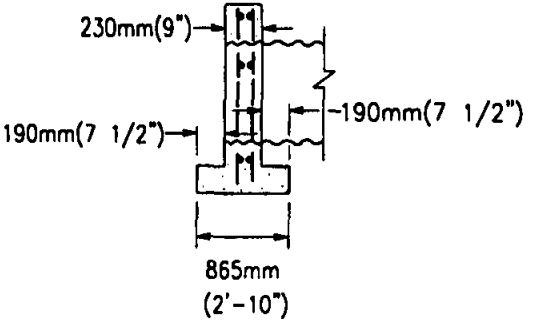

SECTION, SINGLE & DOUBLE HEADWALLS

C.S.P. ARCH SIZE		SINGLE						DOUBLE				
		H		L		Steel	Concrete	L		Steel		Concrete
Metric	(inches)	Metric	(ft/in)	Metric	(ft/in)		cu m C.Y.	Metric	(ft/in)	kg	Lbs.	cu m C.Y.
450mmx275mm	(18x11)	787mm	(2-7)	1.68m	(5-6)	16.8 (37)	.490 (0.64)	2.44m	(8'-0")	23.6	(52)	.700 (0.91)
525mmx375mm	(21x15)	889mm	(2-11)	1.98m	(6-6)	20.4 (45)	.612 (0.80)	3.05m	(10'-0")	27.2	(60)	.940 (1.22)
600mmx450mm	(24x18)	965mm	(3-2)	2.29m	(7-6)	22.7 (50)	.734 (0.96)	3.51m	(11'-6")	31.8	(70)	1.11 (1.45)
700mmx500mm	(28x20)	1.02m	(3-4)	2.59m	(8-6)	27.3 (60)	.860 (1.12)	4.12m	(13'-6")	40.9	(90)	1.35 (1.76)
875mmx600mm	(35x24)	1.12m	(3-8)	3.20m	(10-6)	38.6 (85)	1.13 (1.47)	4.72m	(15'-6")	54.5	(120)	1.66 (2.16)
1050mmx725mm	(42x29)	1.24m	(4-1)	3.81m	(12-6)	50.0 (110)	1.34 (1.76)	5.49m	(18'-0")	65.8	(145)	1.97 (2.57)
1225mmx825mm	(49x33)	1.35m	(4-5)	4.42m	(14-6)	59.0 (130)	1.73 (2.26)	6.40m	(21'-0")	77.2	(170)	2.40 (3.13)
1425mmx950mm	(57x38)	1.47m	(4-10)	5.18m	(17-0)	70.4 (155)	2.15 (2.81)	7.47m	(24'-6")	95.3	(210)	2.96 (3.86)
1550mmx1050mm	(64x43)	1.60m	(5-3)	5.79m	(19-0)	79.4 (175)	2.54 (3.31)	8.23m	(27'-0")	104.4	(230)	3.38 (4.42)
1775mmx1175mm	(71x47)	1.70m	(5-7)	6.40m	(21-0)	88.5 (195)	2.92 (3.81)	9.14m	(30'-0")	115.7	(255)	3.90 (5.09)

RECOMMENDED BY THE SAN DIEGO REGIONAL STANDARDS COMMITTEE

Chairperson R.C.E. 19246 Date 3/01/2005

DRAWING NUMBER D-31

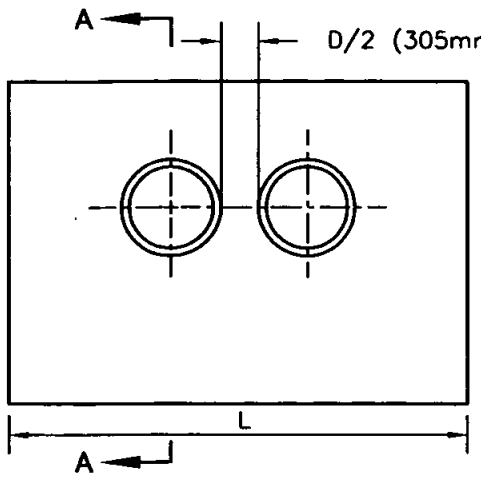

DOUBLE PIPE ELEVATION

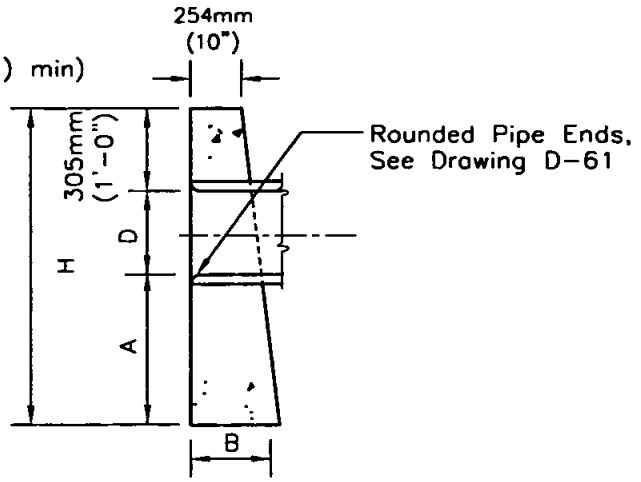

SECTION A–A

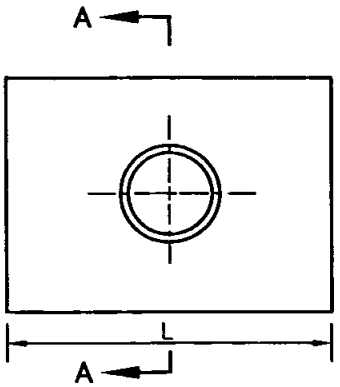

SINGLE PIPE ELEVATION

D		A		B		H		SINGLE				DOUBLE			
								L		Concrete		L		Concrete	
mm	in.	mm	ft./in.	mm	ft./in.	m	ft./in.	m	ft./in.	kg	C.Y.	m	ft./in.	kg	C.Y.
300	(12")	610	(2'-0")	305	(1'-0")	1.22	(4'-0")	1.22	(4'-0")	.345	(0.45)	1.73	(5'-8")	.475	(.62)
375	(15")	610	(2'-0")	330	(1'-1")	1.30	(4'-3")	1.52	(5'-0")	.482	(0.63)	2.16	(7'-1")	.650	(.85)
450	(18")	610	(2'-0")	356	(1'-2")	1.40	(4'-6")	1.83	(6'-0")	.635	(0.83)	2.59	(8'-6")	.860	(1.12)
600	(24")	762	(2'-6")	432	(1'-5")	1.68	(5'-6")	2.44	(8'-0")	1.18	(1.54)	3.45	(11'-4")	1.60	(2.09)
750	(30")	762	(2'-6")	533	(1'-9")	1.83	(6'-0")	3.05	(10'-0")	1.85	(2.41)	4.32	(14'-2")	2.50	(3.26)
900	(36")	914	(3'-0")	610	(2'-0")	2.13	(7'-0")	3.66	(12'-0")	2.86	(3.74)	5.18	(17'-0")	3.87	(5.05)

NOTES

1. Concrete shall be 332 kg/M^3 –C–22Mpa (560–C–3250).
2. Exposed corners shall be chamfered 19mm (3/4").

LEGEND ON PLANS

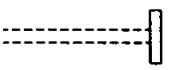

Revision	By	Approved	Date
ORIGINAL		Kercheval	12/75
Add Metric		T. Stanton	03/03
Reformatted		T. Stanton	04/06

SAN DIEGO REGIONAL STANDARD DRAWING

STRAIGHT HEADWALL - TYPE B (CIRCULAR PIPE)

RECOMMENDED BY THE SAN DIEGO REGIONAL STANDARDS COMMITTEE

T. Stanton 3/10/2003

Chairperson R.C.E. 19246 Date

DRAWING NUMBER D-32

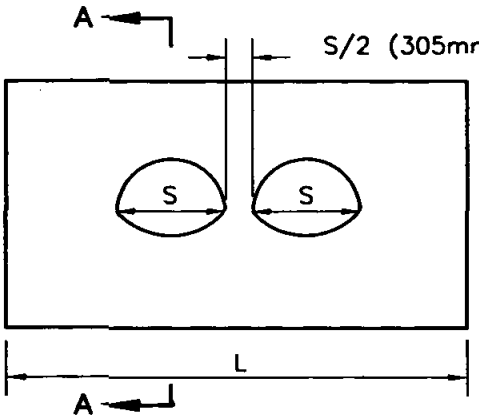

DOUBLE PIPE ELEVATION

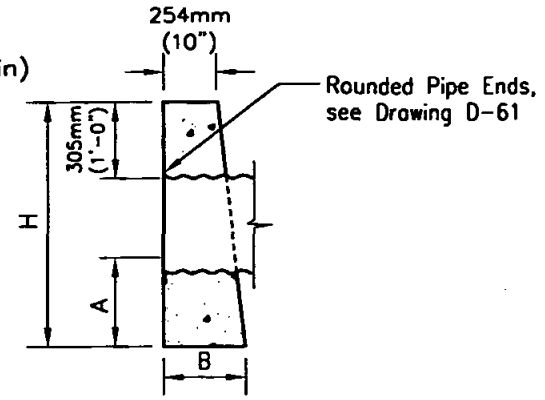

SECTION A–A

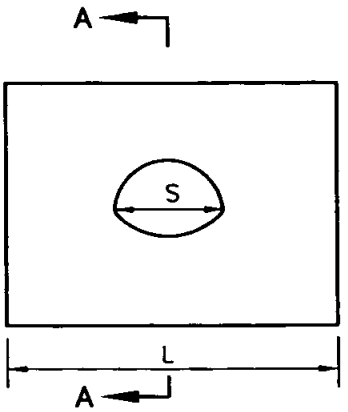

SINGLE PIPE ELEVATION

C.S.P. ARCH SIZE	A		B		H		SINGLE				DOUBLE			
							L		Concrete		L		Concrete	
Metric (inches)	mm	ft./in.	mm	ft./in.	m	ft./in.	m	ft.	cu m	C.Y.	m	ft./in.	cu m	C.Y.
450mmx275mm (18x11)	610	(2'-0")	356	(1'-2")	1.19	(3'-11")	1.83	(6')	0.64	(0.83)	2.21	(7'-3")	0.75	(0.97)
525mmx375mm (21x15)	610	(2'-0")	406	(1'-4")	1.24	(4'-1")	2.13	(7')	0.83	(1.08)	2.95	(9'-8")	1.12	(1.46)
600mmx450mm (24x18)	610	(2'-0")	457	(1'-6")	1.32	(4'-4")	2.44	(8')	1.08	(1.41)	3.51	(11'-6")	1.52	(1.98)
700mmx500mm (28x20)	762	(2'-6")	508	(1'-8")	1.52	(5'-0")	2.74	(9')	1.51	(1.97)	3.81	(12'-6")	2.04	(2.66)
875mmx600mm (35x24)	762	(2'-6")	610	(2'-0")	1.63	(5'-4")	3.05	(10')	1.96	(2.56)	4.37	(14'-5")	2.76	(3.60)

NOTES

1. Concrete shall be 332 kg/M^3 –C–22Mpa (560–C–3250)
2. Exposed corners to be chamfered 19mm (3/4").

LEGEND ON PLANS

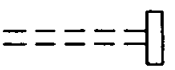

Revision	By	Approved	Date
ORIGINAL		Kercheval	12/75
Add Metric		T. Stanton	03/03
Reformatted		T. Stanton	04/06

SAN DIEGO REGIONAL STANDARD DRAWING

STRAIGHT HEADWALL - TYPE B
(C.S.P. - ARCH PIPE)

RECOMMENDED BY THE SAN DIEGO REGIONAL STANDARDS COMMITTEE

T. Stanton 3/01/2003

Chairperson R.C.E. 19246 Date

DRAWING NUMBER D-33

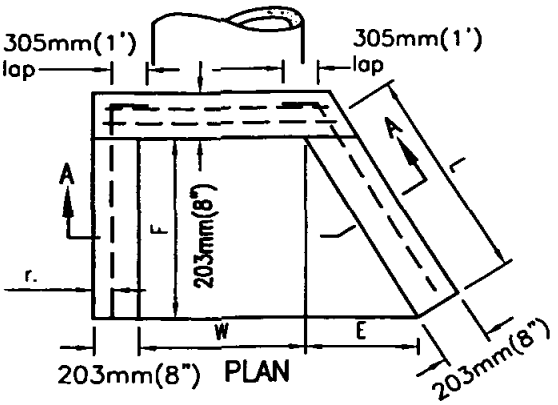

U TYPE WING TYPE

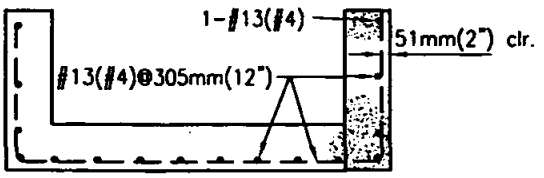

SECTION A–A

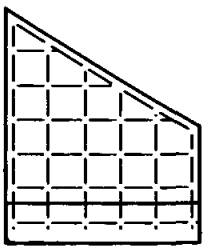

WING WALL REINFORCING

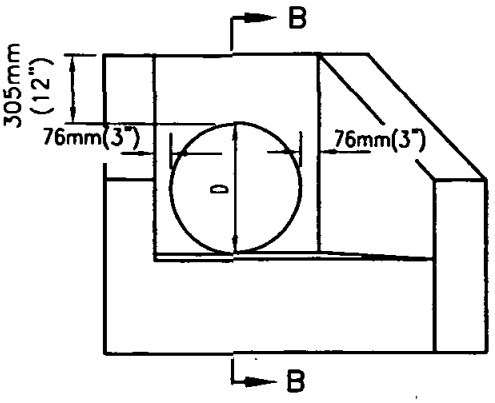

ELEVATION

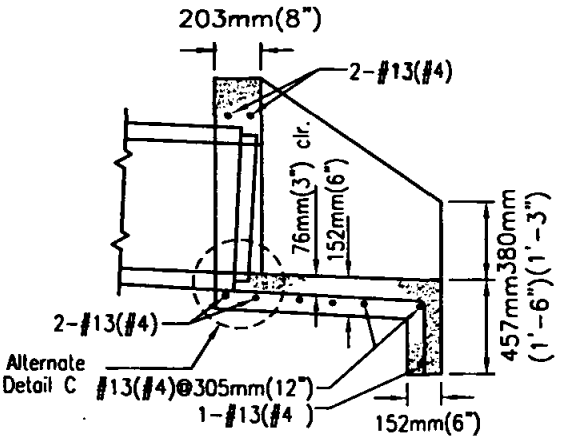

SECTION B–B

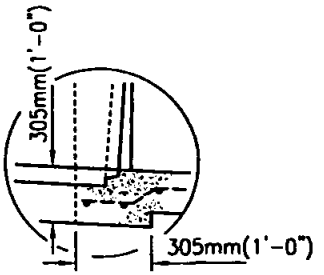

ALT. DETAIL C

	DIA. OF PIPE	DIMENSIONS			DOUBLE PIPE					DOUBLE PIPE				
					W	U TYPE		WING TYPE		W	U TYPE		WING TYPE	
		L	E	F		CONC.	STEEL	CONC.	STEEL		CONC.	STEEL	CONC.	STEEL
Metric	450mm	689mm	381mm	571mm	610mm	0.43kg	16kg	0.49kg	20kg	AS SHOWN ON PLANS	0.63kg	24kg	0.69kg	28kg
US	18"	2'-3 1/8"	1'-3"	1'-10 1/2"	2'-0"	0.55yd	35lb	0.63yd	43lb		0.82yd	53lb	0.90yd	61lb
Metric	600mm	962mm	533mm	800mm	762mm	0.61kg	22kg	0.72kg	28kg		1.0kg	34kg	1.1kg	39kg
US	24"	3'-1 7/8"	1'-9"	2'-7 1/2"	2'-6"	0.79yd	47lb	0.93yd	60lb		1.22yd	73lb	1.36yd	86lb
Metric	750mm	1.24m	686mm	1.03m	914mm	.81kg	33kg	1.0kg	39kg		1.3kg	50kg	1.5kg	56kg
US	30"	4'-0 5/8"	2'-3"	3'-4 1/2"	3'-0"	1.05yd	71lb	1.29yd	85lb		1.66yd	109lb	1.92yd	123lb
Metric	900mm	1.51m	838mm	1.26m	1.07m	1.02kg	40kg	1.30kg	52kg		1.70kg	62kg	1.95kg	74kg
US	36"	4'-11 1/2"	2'-9"	4'-1 1/2"	3'-6"	1.33yd	88lb	1.69yd	114lb		2.19yd	136lb	2.55yd	162lb

NOTES:

1. Concrete shall be 332kg/M^3 -C-22Mpa (560-C-3250)
2. Exposed corners to be chamfered 3/4" (19mm).
3. Multiple pipes to be set a distance of D/2, with a 305mm(1') minimum between outside diameters of pipes.
4. Top of headwall shall be placed approximately parallel to profile grade when the grade is 3% or more.
5. Skewed pipes: Dimension W to be increased in width or length due to skew or multiple pipes.
6. For pipe wall thickness greater than 76mm(3") use alternate Detail-C.

LEGEND ON PLANS

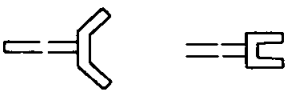

Revision	By	Approved	Date
ORIGINAL		Kercheval	12/75
Add Metric		T. Stanton	03/03
Reformatted		T. Stanton	04/06

SAN DIEGO REGIONAL STANDARD DRAWING

WING AND U TYPE HEADWALLS FOR 450mm (18") TO 900mm (36") PIPES

RECOMMENDED BY THE SAN DIEGO REGIONAL STANDARDS COMMITTEE

T. Stanton 3/01/2003

Chairperson R.C.E. 19246 Date

DRAWING NUMBER D-34

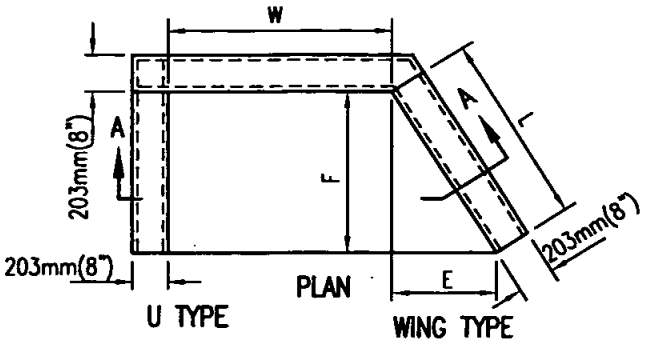

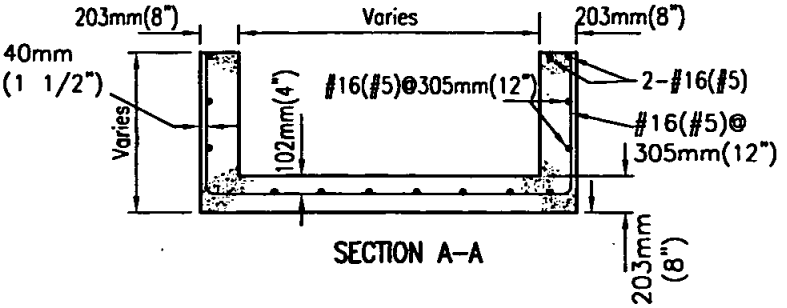

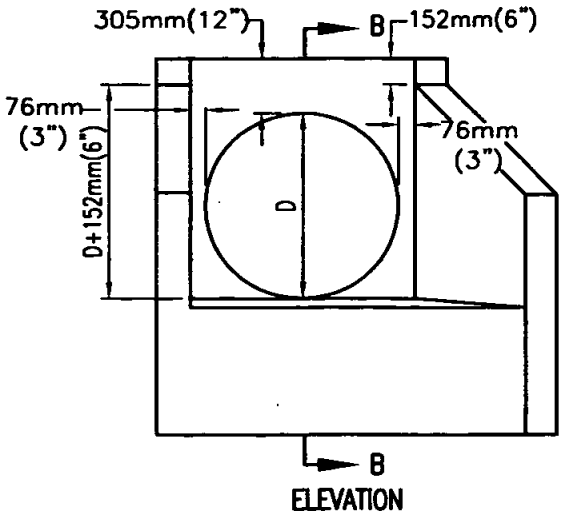

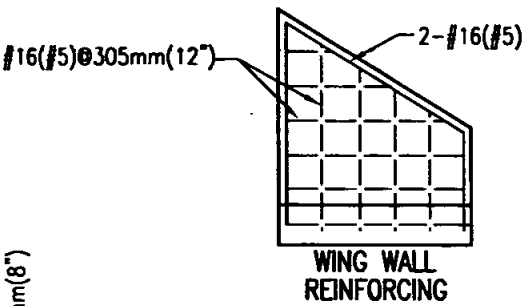

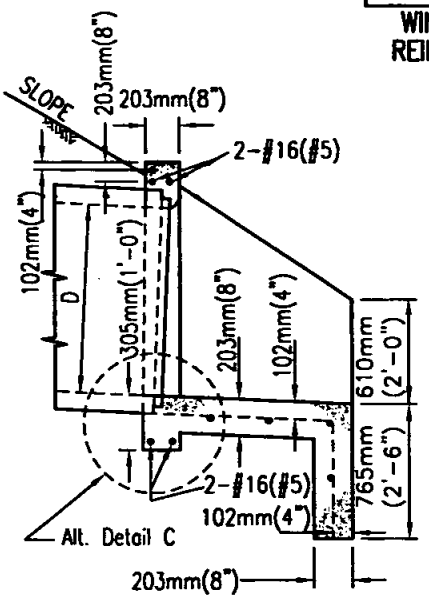

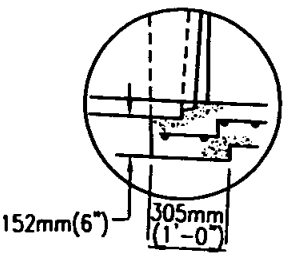

NOTE:

For Dimension Table and General Notes, see D-35B

Revision	By	Approved	Date
ORIGINAL		Kercheval	12/75
Add Metric		T. Stanton	03/03
Reformatted		T. Stanton	04/06

SAN DIEGO REGIONAL STANDARD DRAWING

WING AND U TYPE HEADWALLS FOR 1.0m (42") TO 2.0m (84") PIPE

RECOMMENDED BY THE SAN DIEGO REGIONAL STANDARDS COMMITTEE

T. Stanton 3/01/2003

Chairperson R.C.E. 19246 Date

DRAWING NUMBER **D-35A**

TABLE OF DIMENSIONS AND QUANTITIES FOR DRAWING D-35A

	DIA. OF PIPE	DIMENSIONS			SINGLE PIPE					DOUBLE PIPE				
					W	U TYPE		WING TYPE		W	U TYPE		WING TYPE	
		L	E	F		CONC.	STEEL	CONC.	STEEL		CONC.	STEEL	CONC.	STEEL
						C.Y.	LBS.	C.Y.	LBS.		C.Y.	LBS.	C.Y.	LBS.
Metric	1050mm	1.10m	610mm	914mm	1.22m	1.20 cu m	53.1 kg	1.46 kg	61.3 kg	AS SHOWN ON PLANS	2.1 cu m	86.2 kg	2.5 cu m	97.1 kg
U.S.	42"	3'-7 1/4"	2'-0"	3'-0"	4'-0"	1.57 C.Y.	117lb	1.90 C.Y.	135 lb		2.69 C.Y.	190 lb	3.16 C.Y.	214 lb
Metric	1200mm	1.37m	762mm	1.14m	1.37m	1.51 cu m	70.0 kg	1.90 cu m	84.0 kg		2.62 cu m	115 kg	3.11 cu m	131 kg
U.S.	48"	4'-6"	2'-6"	3'-9"	4'-6"	1.97 C.Y.	153 lb	2.48 C.Y.	184 lb		3.43 C.Y.	252 lb	4.06 C.Y.	288 lb
Metric	1350mm	1.65m	914mm	1.37m	1.52m	1.85 cu m	86.2 kg	2.35 cu m	112 kg		3.25 cu m	145 kg	3.87 cu m	176 kg
U.S.	54"	5'-4 7/8"	3'-0"	4'-6"	5'-0"	2.41 C.Y.	190 lb	3.07 C.Y.	246 lb		4.24 C.Y.	319 lb	5.06 C.Y.	368 lb
Metric	1500mm	1.92m	1.10m	1.60m	1.68m	2.21 cu m	109 kg	2.87 cu m	134 kg		3.40 cu m	175 kg	4.72 cu m	201 kg
U.S.	60"	6'-3 3/4"	3'-6"	5'-3"	5'-6"	2.88 C.Y.	239 lb	3.75 C.Y.	294 lb		5.13 C.Y.	386 lb	6.17 C.Y.	442 lb
Metric	1650mm	2.20m	1.22m	1.83m	6'-0"	2.59 cu m	134 kg	3.46 cu m	162 kg		4.65 cu m	206 kg	5.51 cu m	234 kg
U.S.	66"	7'-2 1/2"	4'-0"	6'-0"	6'-0"	3.38 C.Y.	294 lb	4.52 C.Y.	356 lb		6.08 C.Y.	454 lb	7.20 C.Y.	516 lb
Metric	1800mm	2.47m	1.37m	1.80m	1.98m	3.0 cu m	167 kg	4.22 cu m	190 kg		5.44 cu m	237 kg	6.35 cu m	267 kg
U.S.	72"	8'-1 3/8"	4'-6"	6'-9"	6'-6"	3.93 C.Y.	368 lb	5.52 C.Y.	417 lb		7.11 C.Y.	522 lb	8.30 C.Y.	588 lb
Metric	1950mm	2.74m	1.52m	2.29m	2.13m	3.45 cu m	202 kg	5.13 cu m	229 kg		6.27 cu m	270 kg	7.27 cu m	315 kg
U.S.	78"	9'-0"	5'-0"	7'-6"	7'-0"	4.50 C.Y.	444 lb	6.70 C.Y.	503 lb		8.20 C.Y.	595 lb	9.50 lb	693 lb
Metric	2100mm	2.71m	1.68m	2.51m	2.29m	3.99 cu m	245 kg	6.24 cu m	281 kg		7.27 cu m	312 kg	8.26 cu m	357 kg
U.S.	84"	9'-10 3/4"	5'-6"	8'-3"	7'-6"	5.21 C.Y.	540 lb	8.15 C.Y.	619 lb		9.50 C.Y.	687 lb	10.80 C.Y.	786 lb

Note: Dimensions E and L apply to wing type only.

NOTES:

1. Skewed Pipes: Dimension W to be increased to take care of increased width or length due to skew of multiple pipes.
2. Tops of headwalls, on grade culverts, shall be placed parallel to profile grade when the grades are 3% or more.
3. Concrete shall be 560-C-3250
4. Exposed corners shall chamfered 20mm.
5. Multiple pipes shall be set a distance of D/2, with a 1" minimum, between outside diameters of pipes.
6. For pipe wall thickness greater than 75mm use Alternate Detail-C.

LEGEND ON PLANS

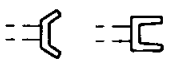

Revision	By	Approved	Date
ORIGINAL		Kercheval	12/75
Add Metric		T. Stanton	03/03
Reformatted		T. Stanton	04/06

SAN DIEGO REGIONAL STANDARD DRAWING

WING AND U TYPE HEADWALLS FOR 1.0 m (42") TO 2.0 m (84") PIPE

RECOMMENDED BY THE SAN DIEGO REGIONAL STANDARDS COMMITTEE

T. Stanton 3/10/2003

Chairperson R.C.E. 19246 Date

DRAWING NUMBER **D-35B**

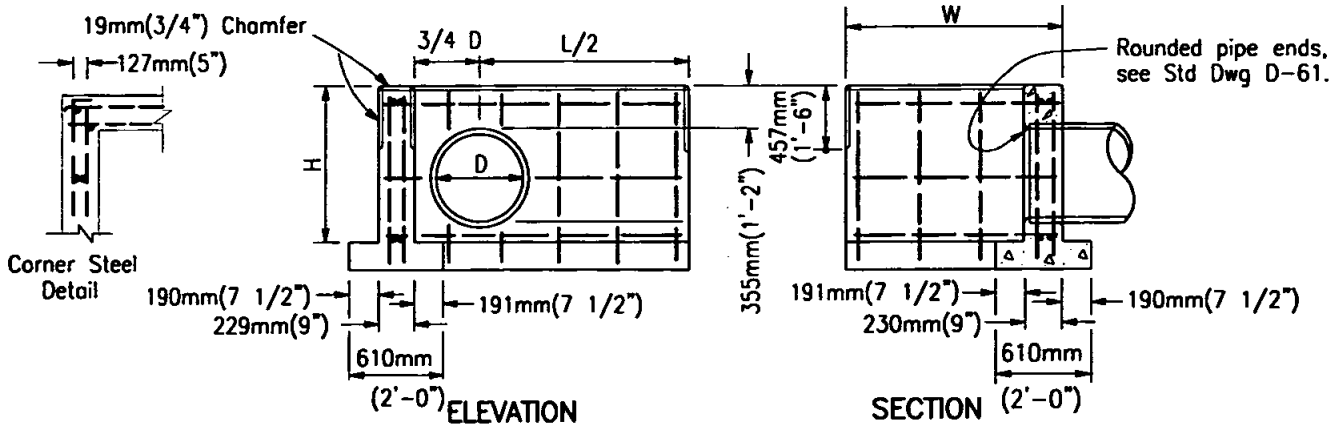

D	H	L/2	LENGTH OF W									
			965mm (3'-4")		1.47m (4'-10")		1.93m (6'-4")		2.39m (7'-10")		2.85m (9'-4")	
			Steel	Conc	Steel	Conc	Steel	Conc	Steel	Conc	Steel	Conc
300mm 12"	813mm 2'-8"	762mm 2'-6"	22.7kg 50lb	0.61cu m 0.79 C.Y.	27.3kg 60lb	.750cu m 0.98 C.Y.	— —	— —	— —	— —	— —	— —
375mm 15"	889mm 2'-11"	914mm 3'-0"	25.0kg 55lb	0.70cu m 0.91 C.Y.	30.0kg 65lb	.850cu m 1.11 C.Y.	— —	— —	— —	— —	— —	— —
450mm 18"	965mm 3'-2"	1.07m 3'-6"	30.0kg 65lb	.796cu m 1.04 C.Y.	34kg 75lb	.956cu m 1.25 C.Y.	— —	— —	— —	— —	— —	— —
525mm 21"	1.04m 3'-5"	1.14m 3'-9"	34.0kg 75lb	.880cu m 1.15 C.Y.	40.9kg 90lb	1.04cu m 1.36 C.Y.	— —	— —	— —	— —	— —	— —
600mm 24"	1.12m 3'-8"	1.30m 4'-3"	38.6kg 85lb	.990cu m 1.29 C.Y.	45.4kg 100lb	1.16cu m 1.51 C.Y.	50.0kg 110lb	1.33cu m 1.74 C.Y.	— —	— —	— —	— —
675mm 27"	1.14m 3'-11"	1.45m 4'-9"	40.9kg 90lb	1.10cu m 1.44 C.Y.	47.7kg 105lb	1.28cu m 1.67 C.Y.	52.2kg 115lb	1.91cu m 1.91 C.Y.	— —	— —	— —	— —
750mm 30"	1.27m 4'-2"	1.52m 5'-0"	43.0kg 95lb	1.19cu m 1.55 C.Y.	50.0kg 110lb	1.38cu m 1.80 C.Y.	54.5kg 120lb	2.05cu m 2.05 C.Y.	61.3kg 135lb	1.75cu m 2.29 C.Y.	— —	— —
825mm 33"	1.35m 4'-5"	1.68m 5'-6"	47.7kg 105lb	1.31cu m 1.71 C.Y.	54.5kg 120lb	1.51cu m 1.97 C.Y.	61.3kg 135lb	2.23cu m 2.23 C.Y.	68.0kg 150lb	1.90cu m 2.48 C.Y.	— —	— —
900mm 36"	1.42m 4'-8"	1.83m 6'-0"	50.0kg 110lb	1.44cu m 1.88 C.Y.	56.7kg 125lb	1.65cu m 2.15 C.Y.	63.5kg 140lb	2.41cu m 2.41 C.Y.	70.3kg 155lb	2.05cu m 2.68 C.Y.	77.2kg 170lb	2.26cu m 2.95 C.Y.
975mm 39"	1.25m 4'-11"	1.90m 6'-3"	— —	— —	68.0kg 150lb	1.75cu m 2.28 C.Y.	77.2kg 170lb	2.56cu m 2.56 C.Y.	84.0kg 185lb	2.18cu m 2.84 C.Y.	90.8kg 200lb	2.39cu m 3.12 C.Y.
1050mm 42"	1.58m 5'-2"	2.06m 6'-9"	— —	— —	70.3kg 155lb	1.85cu m 2.42 C.Y.	79.4kg 175lb	2.76cu m 2.76 C.Y.	86.2kg 190lb	2.34cu m 3.05 C.Y.	95.3kg 210lb	2.56cu m 3.34 C.Y.
1125mm 45"	1.65m 5'-5"	2.21m 7'-3"	— —	— —	— —	— —	81.7kg 180lb	2.97cu m 2.97 C.Y.	90.8kg 200lb	2.50cu m 3.27 C.Y.	97.6kg 215lb	2.73cu m 3.57 C.Y.
1200mm 48"	1.73m 5'-8"	2.29m 7'-6"	— —	— —	— —	— —	86.2kg 190lb	3.13cu m 3.13 C.Y.	98.0kg 216lb	2.63cu m 3.44 C.Y.	105kg 230lb	2.87cu m 3.75 C.Y.
1275mm 51"	1.80m 5'-11"	2.44m 8'-0"	— —	— —	— —	— —	— —	— —	99.8kg 220lb	2.81cu m 3.67 C.Y.	107kg 235lb	3.05cu m 3.99 C.Y.
1350mm 54"	1.88m 6'-2"	2.59m 8'-6"	— —	— —	— —	— —	— —	— —	107kg 235lb	2.99cu m 3.91 C.Y.	114kg 250lb	3.25cu m 4.24 C.Y.

NOTES

1. Concrete shall be 332 kg/M^3 -C-22Mpa (560-C-3250).
2. All reinforcing steel #13 (#4) bars. All vertical and horizontal tie bars 460mm (18") maximum spacing.
3. When multiple pipes are used, the distance between pipes shall be D/2 (300mm (1') min.). The dimension L/2 is from the center of the pipe to the end of the headwall as shown.

LEGEND ON PLANS

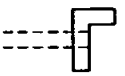

Revision	By	Approved	Date
ORIGINAL		Kercheval	12/75
Add Metric		T. Stanton	03/03
Reformatted		T. Stanton	04/06

SAN DIEGO REGIONAL STANDARD DRAWING

L TYPE HEADWALLS
CIRCULAR PIPES

RECOMMENDED BY THE SAN DIEGO REGIONAL STANDARDS COMMITTEE

T. Stanton 3/01/2003

Chairperson R.C.E. 19246 Date

DRAWING NUMBER **D-36**

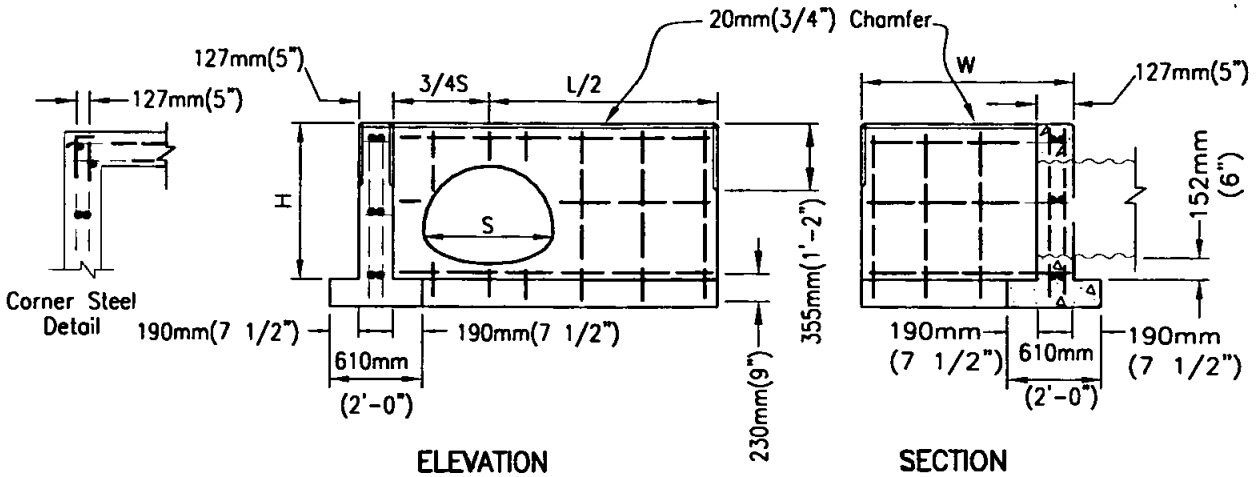

CSP ARCH SIZE		H	L/2	LENGTH OF W									
				1.02m (3'-4")		1.47m (4'-10")		1.93m (6'-4")		2.39m (7'-10")		2.84m (9'-4")	
				Steel	Conc	Steel	Conc	Steel	Conc	Steel	Conc	Steel	Conc
Metric U.S.	450mm x 275mm 18"x11"	787mm 2'-7"	838mm 2'-9"	22.7kg 50lb	.643cu m 0.84 C.Y.	27.3kg 60lb	.788cu m 1.03 C.Y.	31.8kg 70lb	.926cu m 1.21 C.Y.	36.3kg 80lb	1.07cu m 1.39 C.Y.	40.9kg 90lb	1.20cu m 1.57 C.Y.
Metric U.S.	525mm x 375mm 21"x15"	889mm 2'-11"	991mm 3'-3"	27.3kg 60lb	.765cu m 1.00 C.Y.	29.5kg 65lb	.910cu m 1.18 C.Y.	34.0kg 75lb	1.06cu m 1.38 C.Y.	40.9kg 90lb	1.21cu m 1.58 C.Y.	54.4kg 100lb	1.36cu m 1.77 C.Y.
Metric U.S.	600mm x 450mm 24"x18"	965mm 3'-2"	1.14m 3'-9"	27.3kg 60lb	.818cu m 1.07 C.Y.	31.8kg 70lb	1.00cu m 1.32 C.Y.	36.3kg 80lb	1.17cu m 1.53 C.Y.	43.1kg 95lb	1.33cu m 1.74 C.Y.	49.9kg 110lb	1.49cu m 1.94 C.Y.
Metric U.S.	700mm x 500mm 28"x20"	1.02m 3'-4"	1.30m 4'-3"	31.8kg 70lb	.964cu m 1.26 C.Y.	36.3kg 80lb	1.13cu m 1.47 C.Y.	40.9kg 90lb	1.29cu m 1.68 C.Y.	45.4kg 100lb	1.45cu m 1.90 C.Y.	52.2kg 115lb	1.62cu m 2.11 C.Y.
Metric U.S.	875mm x 600mm 35"x24"	1.07m 3'-8"	1.35m 5'-3"	45.36 100lb	1.16cu m 1.51 C.Y.	49.9kg 110lb	1.33cu m 1.74 C.Y.	54.5kg 120lb	1.51cu m 1.97 C.Y.	63.5kg 140lb	1.69cu m 2.20 C.Y.	70.3kg 155lb	1.85cu m 2.42 C.Y.
Metric U.S.	1050mm x 725mm 42"x29"	1.25m 4'-1"	1.90m 6'-3"	52.2kg 115lb	1.40cu m 1.82 C.Y.	59.0kg 130lb	1.58cu m 2.06 C.Y.	63.5kg 140lb	1.77cu m 2.31 C.Y.	70.3kg 155lb	1.95cu m 2.55 C.Y.	77.2kg 170lb	2.17cu m 2.83 C.Y.
Metric U.S.	1225mm x 825mm 49"x33"	1.35m 4'-5"	2.21m 7'-3"	59.0kg 130lb	1.62cu m 2.12 C.Y.	65.8kg 145lb	1.82cu m 2.37 C.Y.	70.3kg 155lb	2.02cu m 2.64 C.Y.	77.2kg 170lb	2.22cu m 2.90 C.Y.	84.0kg 185lb	2.41cu m 3.15 C.Y.
Metric U.S.	1425mm x 950mm 57"x38"	1.47m 4'-10"	2.59m 8'-6"	65.8kg 145lb	1.93cu m 2.52 C.Y.	75.6kg 160lb	2.14cu m 2.79 C.Y.	79.4kg 175lb	2.35cu m 3.07 C.Y.	86.2kg 190lb	2.57cu m 3.35 C.Y.	93.0kg 205lb	2.76cu m 3.61 C.Y.
Metric U.S.	1550mmx1050mm 64"x43"	1.35m 5'-3"	2.90m 9'-6"	84.0kg 185lb	2.21cu m 2.89 C.Y.	90.8kg 200lb	2.38cu m 3.11 C.Y.	97.6kg 215lb	2.66cu m 3.48 C.Y.	107kg 235lb	2.89cu m 3.77 C.Y.	114kg 250lb	3.11cu m 4.06 C.Y.
Metric U.S.	1775mmx1175mm 71"x47"	1.45m 5'-7"	3.20m 10'-6"	90.8kg 200lb	2.49cu m 3.25 C.Y.	97.6kg 215lb	2.73cu m 3.56 C.Y.	107kg 235lb	2.96cu m 3.86 C.Y.	114kg 250lb	3.19cu m 4.17 C.Y.	123kg 270lb	3.43cu m 4.48 C.Y.

NOTES

1. Concrete shall be 332 kg/M^3 -C-22Mpa (560-C-3250)
2. All reinforcing steel #13 (#4) bars. All vertical and horizontal tie bars 460mm (18") maximum spacing.
3. When multiple pipes are used, the distance between pipes shall be S/2 (305mm (1') min.). The dimension L/2 is from the center of the pipe to the end of the headwall as shown.

LEGEND ON PLANS

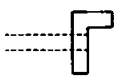

Revision	By	Approved	Date
ORIGINAL		Kercheval	12/75
Add Metric		T. Stanton	03/03
Reformatted		T. Stanton	04/06

SAN DIEGO REGIONAL STANDARD DRAWING

L TYPE HEADWALLS
C.S.P. ARCH PIPE

RECOMMENDED BY THE SAN DIEGO REGIONAL STANDARDS COMMITTEE

T. Stanton 3/01/2003

Chairperson R.C.E. 19246 Date

DRAWING NUMBER D-37

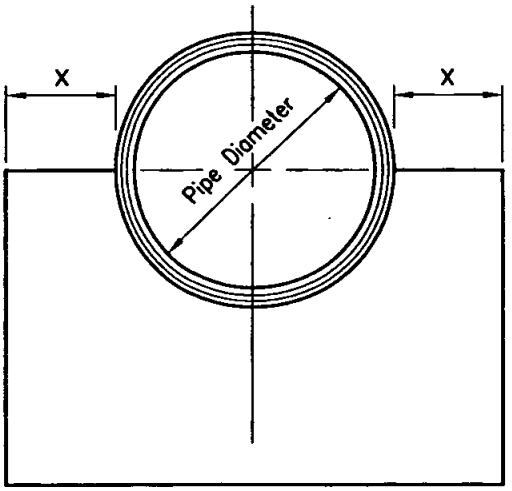

FACE ELEVATION

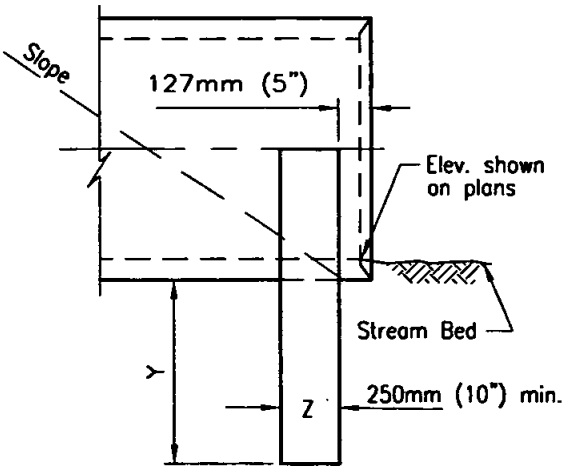

SIDE ELEVATION

PIPE DIAMETER	X	Y	Z
300mm (12") TO 600mm (24")	310mm (1"–0")	610mm (2"–0")	254mm (10")
525mm (21") TO 900mm (36")	457mm (1"–6")	762mm (2"–6")	305mm (12")
975mm (39") TO 1200mm (48")	610mm (2'–0")	914mm (3'–0")	305mm (12")
1275mm (51") TO 1500mm (60")	762mm (2'–6")	914mm (3'–0")	356mm (14")
1575mm (63") & Larger	914mm (3'–0")	914mm (3'–0")	356mm (14")

NOTES

1. A curtain wall shall be used in place of a headwall at culvert ends where extension of the culvert is considered imminent or, no fill is retained.
2. Concrete shall be 332 kg/M^3 –C–22Mpa (560–C–3250) .
3. Keep the pipe–end clear of obstructions to permit easy placing of culvert extension.

LEGEND ON PLANS

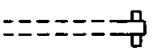

Revision	By	Approved	Date
ORIGINAL		Kercheval	12/75
Add Metric		T. Stanton	03/03
Reformatted		T. Stanton	04/06

SAN DIEGO REGIONAL STANDARD DRAWING

CURTAIN WALL

RECOMMENDED BY THE SAN DIEGO REGIONAL STANDARDS COMMITTEE

T. Stanton 3/01/2005

Chairperson R.C.E. 19246 Date

DRAWING NUMBER D-38

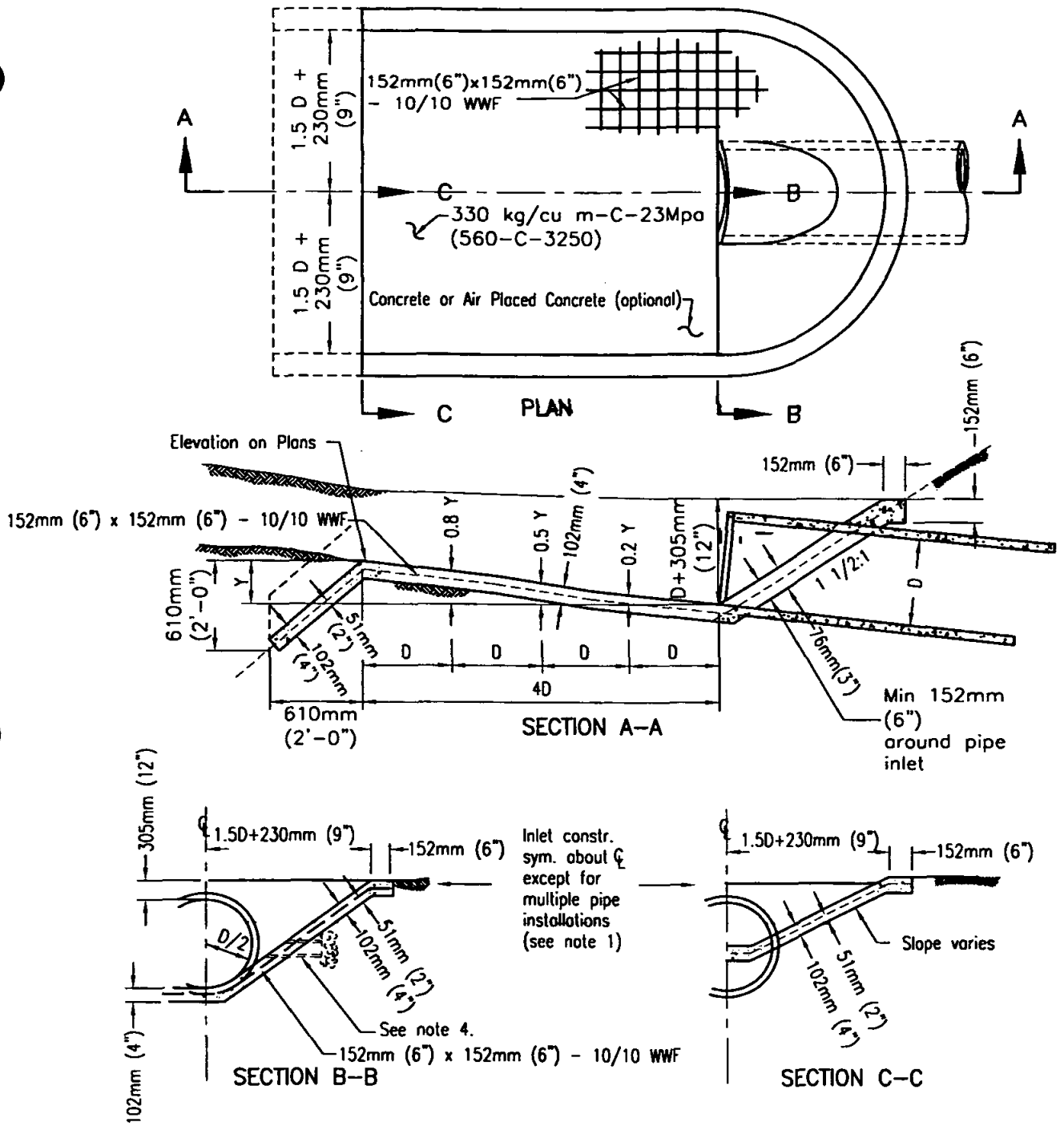

NOTES

1. When more than one pipe is used the profile view shown shall hold for the distance across across all pipe openings. Section A-A and B-B shall be from the outermost pipe. The distance between pipes shall be D/2 for round and Span/3 for arch pipe. (305mm (12") minimum).
2. Culvert shall be cut off even with apron surface when required by the Agency.
3. Use inlet apron only where a flared and section can not be utilized.
4. Place weep holes when required by the Agency.

LEGEND ON PLANS

Revision	By	Approved	Date
ORIGINAL		Kercheval	12/75
Add Metric		T. Stanton	03/03
Reformatted		T. Stanton	04/06

SAN DIEGO REGIONAL STANDARD DRAWING

INLET APRON FOR CULVERTS UP TO 1050mm (42") DIAMETER

RECOMMENDED BY THE SAN DIEGO REGIONAL STANDARDS COMMITTEE

T. Stanton 3/10/2003

Chairperson R.C.E. 19246 Date

DRAWING NUMBER D-39

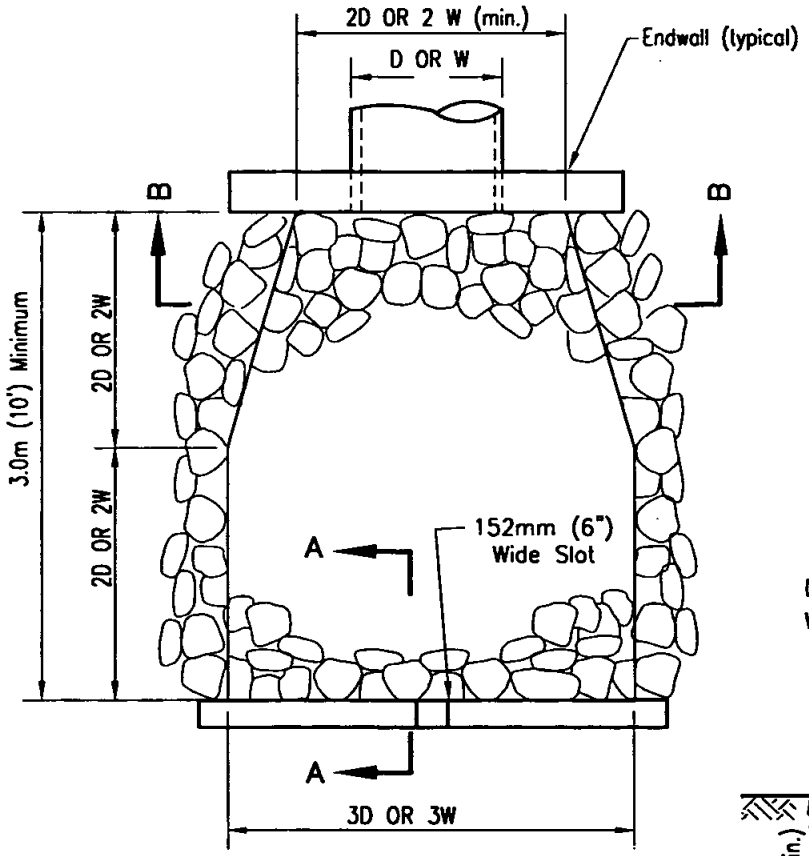

PLAN

Design Velocity m/sec (ft/sec)*	Rock Classification	T (min)
1.8–3 (6–10)	No. 2 Backing	320mm (1.1ft)
3–3.7 (10–12)	220 kg (1/4 ton)	823mm (2.7ft)
3.7–4.3 (12–14)	450 kg (1/2 ton)	1.1m (3.5ft)
4.3–4.9 (14–16)	900 kg (1 ton)	1.3m (4.4ft)
4.9–5.5 (16–18)	1.8 tonne (2 ton)	1.6m (5.4ft)

*over 5.5 mps (18 fps) requires special design

D = Pipe Diameter
W = Bottom Width of Channel

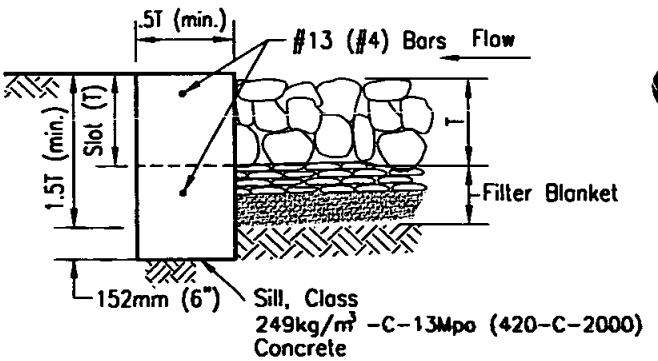

SECTION A–A

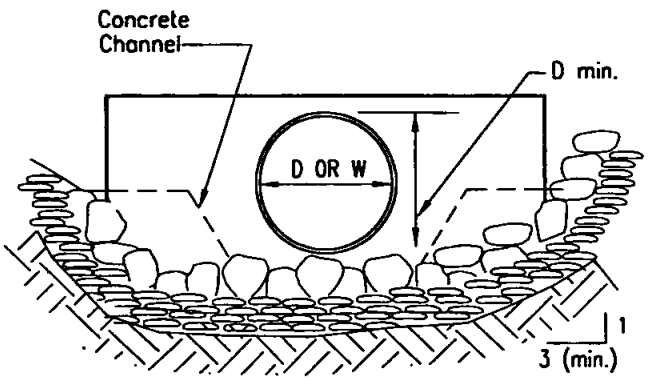

SECTION B–B

NOTES

1. Plans shall specify:
   A) Rock Class and thickness (T).
   B) Filter material, number of layers and thickness.
2. Rip rap shall be either quarry stone or broken concrete (if shown on the plans.) Cobbles are not acceptable.
3. Rip rap shall be placed over filter blanket which may be either granular material or filter fabric (woven filter slit film fabric shall not be used).
4. See Regional Supplement Amendments for selection of filter blanket.
5. Rip rap energy dissipators shall be designated as either Type 1 or Type 2. Type 1 shall be with concrete sill; Type 2 shall be without sill.

Revision	By	Approved	Date
ORIGINAL		Kercheval	12/75
Add Metric		T. Stanton	03/03
Add Rip Rap Table		S. Brady	04/06

SAN DIEGO REGIONAL STANDARD DRAWING

RIP RAP ENERGY DISSIPATOR

RECOMMENDED BY THE SAN DIEGO REGIONAL STANDARDS COMMITTEE

T. Stanton 04/27/2006

Chairperson R.C.E. 19246 Date

DRAWING NUMBER D-40

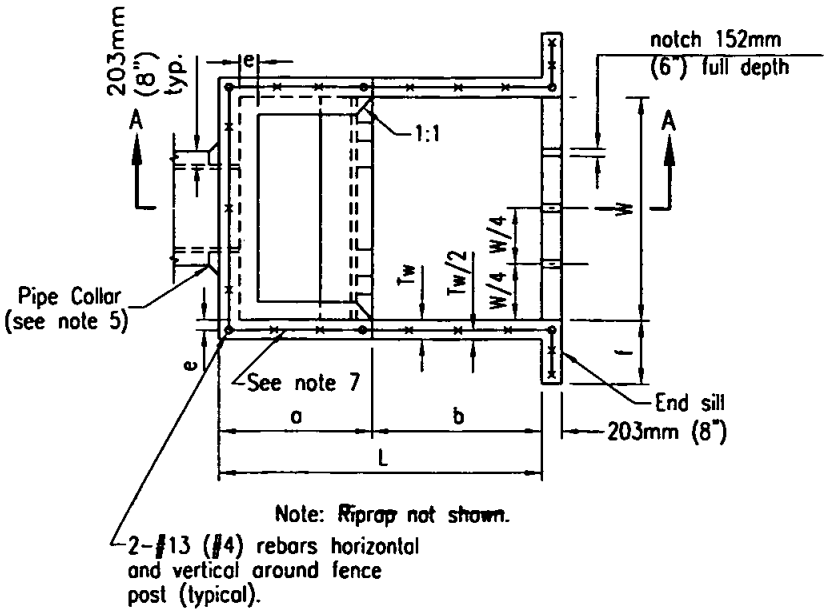

PLAN

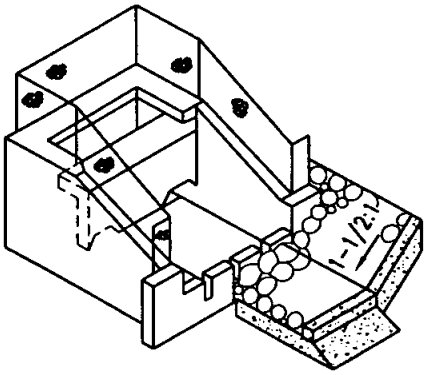

PICTORIAL VIEW

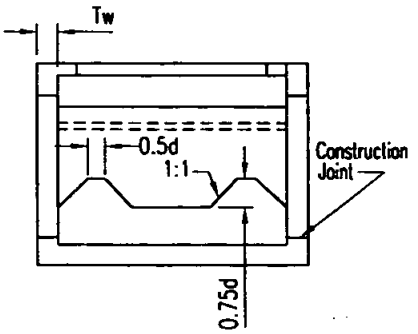

SECTION B–B

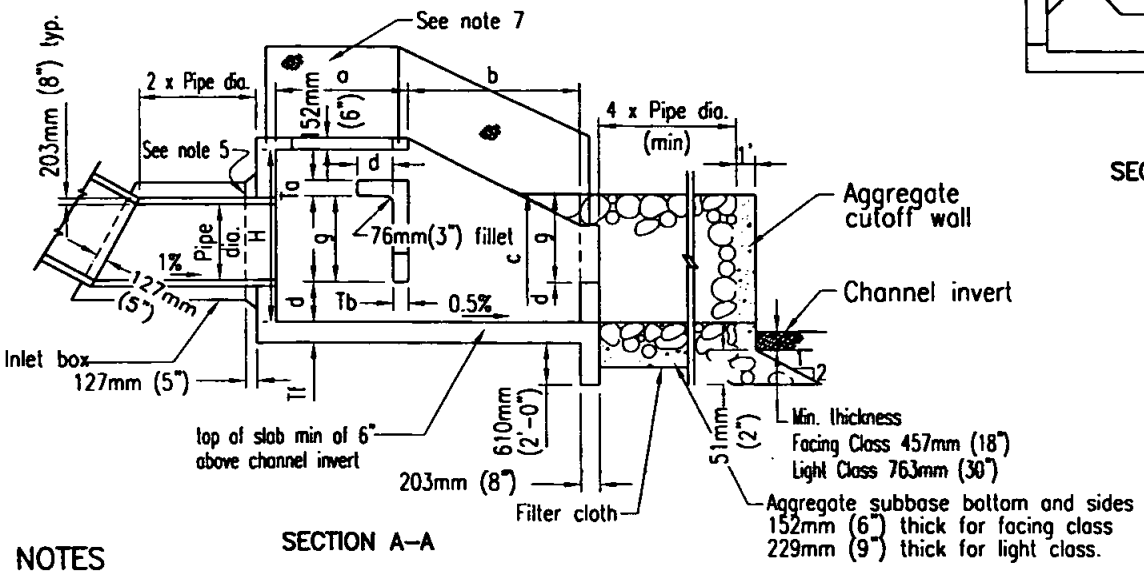

SECTION A–A

NOTES

1. Design
   Equivalent Fluid Pressure (Earth Loading)= 961 kg/cu m (60 p.c.f.) Maximum Outlet velocity = 10.7m (35')/s
2. Concrete shall be 332 kg/M^3-C-22Mpa (560-C-3250)
3. Reinforcing shall conform to ASTM designation A615 and may be grade 40 or 60. Reinforcing shall be placed with 51mm (2") clear concrete cover unless noted otherwise. Splices shall not be permitted except as indicated on the plans.
4. For pipe grades not exceeding 20%, inlet box may be omitted.
5. If inlet box is omitted, construct pipe collar as shown.
6. Unless noted otherwise, all reinforcing bar bends shall be fabricated with standard hooks.
7. Five foot high chain link fencing, embed post 18" deep in walls and encase with class B mortar.
8. In Sandy and Silty soil:
   a) Riprap and aggregate base cutoff wall required at the end of rock apron.
   b) Filter cloth (Polyfilter X or equivalent) shall be installed on native soil base, minimum of 305mm (1 ft.) overlaps at joints.
9. Rip rap and subbase classification shall be as shown on plans.

FOR DIMENSIONS, SEE D-41B.

Revision	By	Approved	Date
ORIGINAL		Kercheval	12/75
Add Metric		T. Stanton	03/03
Reformatted		T. Stanton	04/06

SAN DIEGO REGIONAL STANDARD DRAWING

CONCRETE ENERGY DISSIPATOR

RECOMMENDED BY THE SAN DIEGO REGIONAL STANDARDS COMMITTEE

T. Stanton 3/10/2003

Chairperson R.C.E. 19246 Date

DRAWING NUMBER **D-41A**

METRIC DIMENSIONS TABLE, FOR STRUCTURE DETAILS SEE D-41A.

Pipe Dia	457mm	610mm	9.14m	11.0m	12.80m	14.63m	16.46m	18.29m	21.95m
Area (sq. m)	.164	.292	.456	.657	.893	1.17	.1.48	1.82	2.63
Max. Q (cu m/s)	.594	1.08	1.67	2.41	3.26	4.28	5.41	6.68	9.60
W	1.66m	1.80m	2.13m	2.82m	3.20m	3.58m	3.96	4.34	5.03m
H	1.30m	1.60m	1.90m	2.21m	2.44m	2.74m	2.87m	3.28m	3.73m
L	2.24m	2.74m	3.25m	3.76m	4.27m	4.78m	5.28m	5.79m	6.71m
a	991mm	1.19m	1.40m	1.60m	1.83m	1.80m	2.24m	2.44m	2.82m
b	1.24m	1.55m	1.85m	2.16m	2.44m	2.72m	3.05m	3.35m	3.87m
c	711mm	864mm	1.02m	1.17m	1.35m	1.50m	1.65m	1.80m	2.11m
d	279mm	356mm	406mm	482mm	533mm	610mm	660mm	737mm	838mm
e	152mm	152mm	203mm	203mm	254mm	254mm	305mm	305mm	381mm
f	457mm	610mm	762mm	914mm	914mm	914mm	914mm	914mm	914mm
g	635mm	762mm	914mm	1.07m	1.19m	1.35m	1.50m	1.63m	1.88m
Tf	203mm			254mm		305mm			
Tb	178mm			241mm		267mm			
Tw	178mm			241mm		267mm			
To	178mm			203mm					

IMPERIAL DIMENSIONS TABLE, FOR STRUCTURE DETAILS SEE D-41A.

Pipe Dia (in)	18	24	30	36	42	48	54	60	72
Area (sq.ft.)	1.77	3.14	4.91	7.07	9.62	12.57	15.90	19.63	28.27
Max. Q (cfs)	21	38	59	85	115	151	191	236	339
W	5'-6"	6'-9"	8'-0"	9'-3"	10'-6"	11'-9"	13'-0"	14'-3"	16'-6"
H	4'-3"	5'-3"	6'-3"	7'-3"	8'-0"	9'-0"	9'-9"	10'-9"	12'-3"
L	7'-4"	9'-0"	10'-8"	12'-4"	14'-0"	15'-8"	17'-4"	19'-0"	22'-0"
a	3'-3"	3'-11"	4'-7"	5'-3"	6'-0"	6'-9"	7'-4"	8'-0"	9'-3"
b	4'-1"	5'-1"	6'-1"	7'-1"	8'-0"	8'-11"	10'-0"	11'-0"	12'-9"
c	2'-4"	2'-10"	3'-4"	3'-10"	4'-5"	4'-11"	5'-5"	5'-11"	6'-11"
d	0'-11"	1'-2"	1'-4"	1'-7"	1'-9"	2'-0"	2'-2"	2'-5"	2'-9"
e	0'-6"	0'-6"	0'-8"	0'-8"	0'-10"	0'-10"	1'-0"	1'-0"	1'-3"
f	1'-6"	2'-0"	2'-6"	3'-0"	3'-0"	3'-0"	3'-0"	3'-0"	3'-0"
g	2'-1"	2'-6"	3'-0"	3'-6"	3'-11"	4'-5"	4'-11"	5'-4"	6'-2"
Tf	8"			10"		12"			
Tb	7"			9 1/2"		10 1/2"			
Tw	7"			9 1/2"		10 1/2"			
To	7"			8"					

Revision	By	Approved	Date
ORIGINAL		Kercheval	12/75
Add Metric		T. Stanton	03/03
Reformatted		T. Stanton	04/06

SAN DIEGO REGIONAL STANDARD DRAWING

CONCRETE ENERGY DISSIPATOR

RECOMMENDED BY THE SAN DIEGO REGIONAL STANDARDS COMMITTEE

T. Stanton 3/10/2003

Chairperson R.C.E. 19246 Date

DRAWING NUMBER **D-41B**

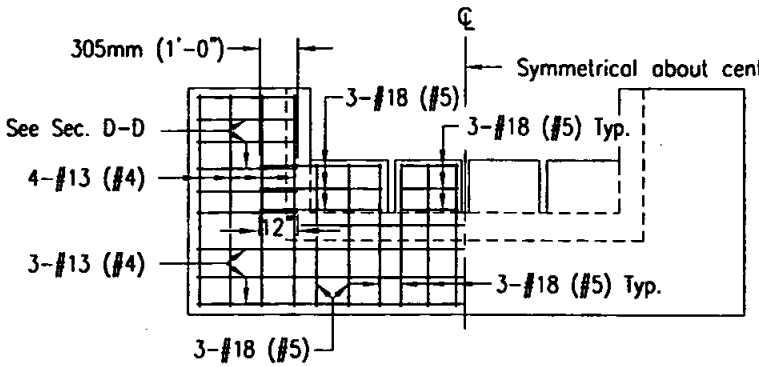

END SILL ELEVATION

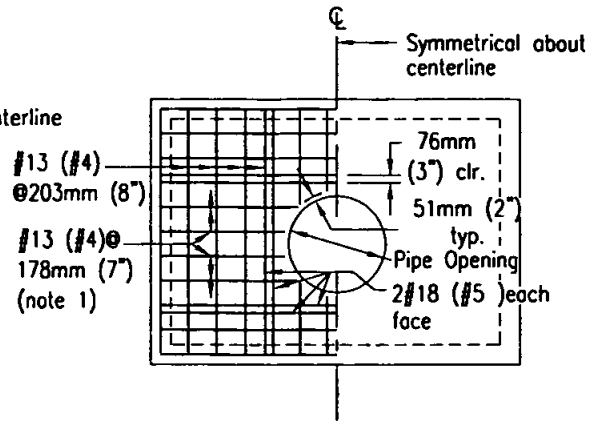

HEADWALL ELEVATION

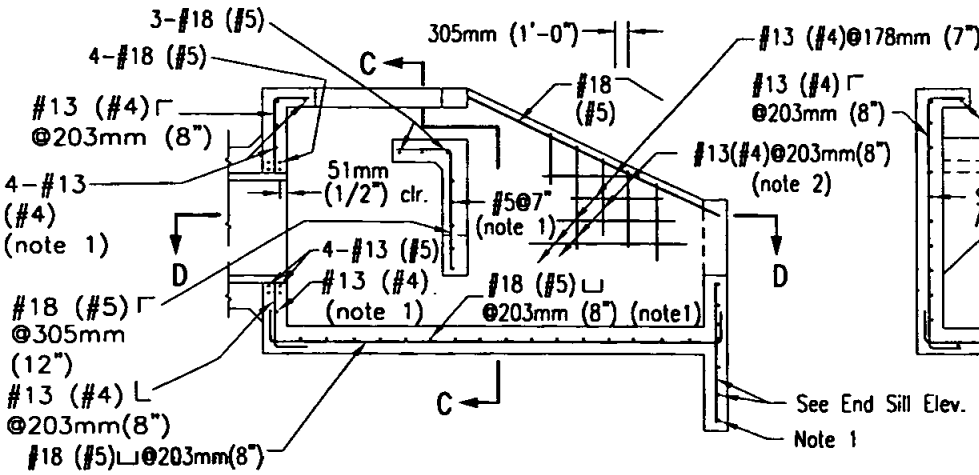

SECTION A–A

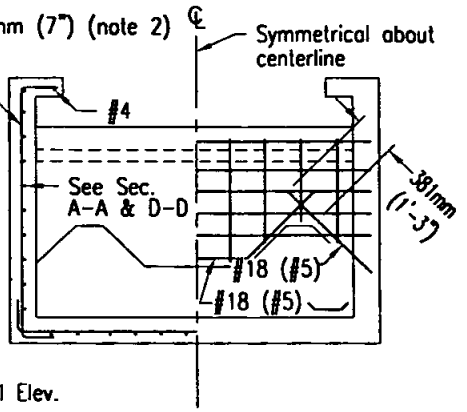

SECTION C–C

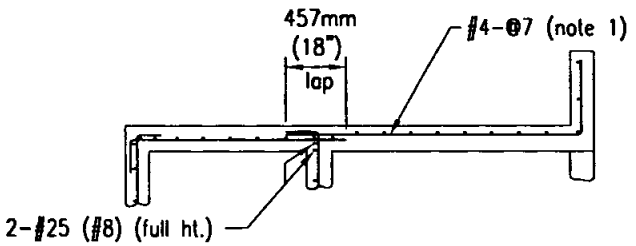

SECTION D–D

NOTES

1. Place reinforcing, as noted, at center wall (or slab).
2. Match location of reinforcing with that in headwall, end sill and foundation slab.
3. All reinforcing shall be placed with 51mm (2") concrete cover, unless noted otherwise.

Revision	By	Approved	Date
ORIGINAL		Kercheval	12/75
Add Metric		T. Stanton	03/03
Reformatted		T. Stanton	04/06

SAN DIEGO REGIONAL STANDARD DRAWING

CONCRETE ENERGY DISSIPATOR (REINFORCEMENT) 450mm (18") TO 750mm (30") DIAMETER PIPE

RECOMMENDED BY THE SAN DIEGO REGIONAL STANDARDS COMMITTEE

T. Stanton 3/01/2003

Chairperson R.C.E. 19246 Date

DRAWING NUMBER **D-42**

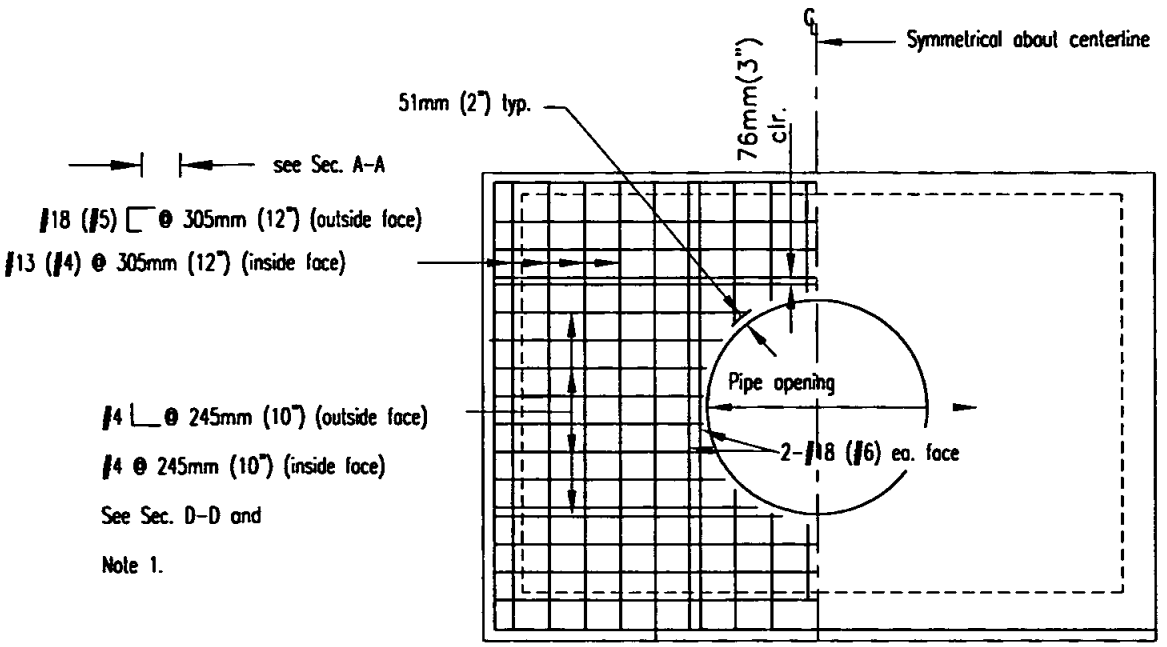

HEADWALL ELEVATION

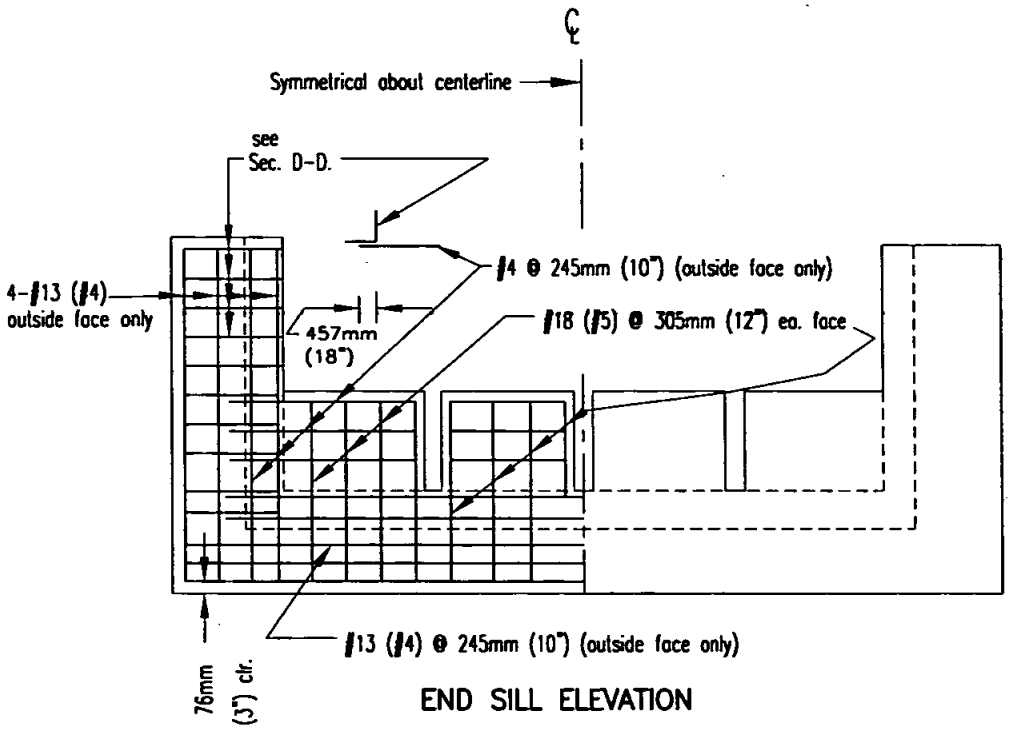

END SILL ELEVATION

Revision	By	Approved	Date
ORIGINAL		Kercheval	12/75
Add Metric		T. Stanton	03/03
Reformatted		T. Stanton	04/06

SAN DIEGO REGIONAL STANDARD DRAWING

CONCRETE ENERGY DISSIPATOR (REINFORCEMENT) 900mm (36") TO 1800mm (72") DIAMETER PIPE

RECOMMENDED BY THE SAN DIEGO REGIONAL STANDARDS COMMITTEE

T. Stanton 3/01/2003

Chairperson R.C.E. 19246 Date

DRAWING NUMBER **D-43A**

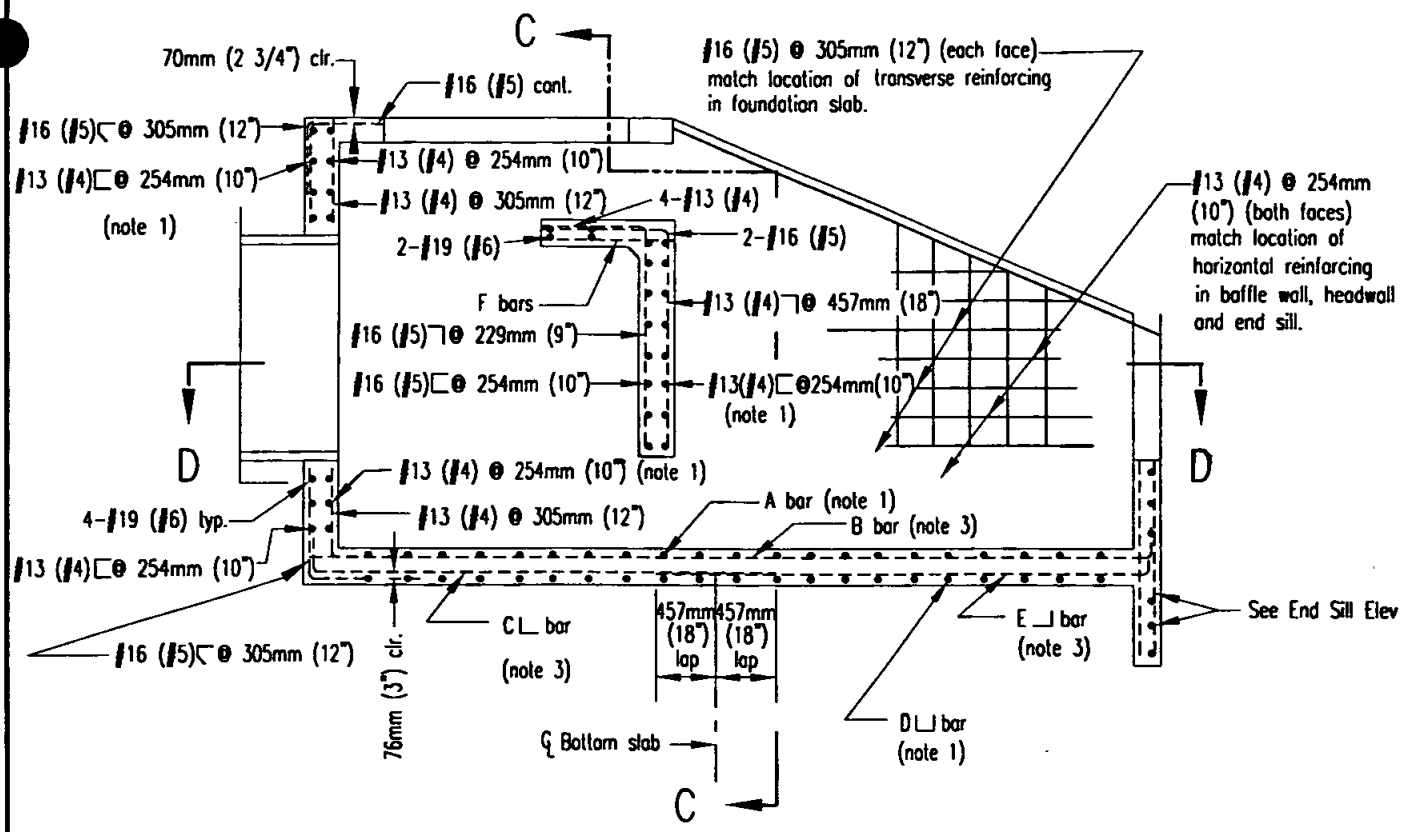

SECTION A–A

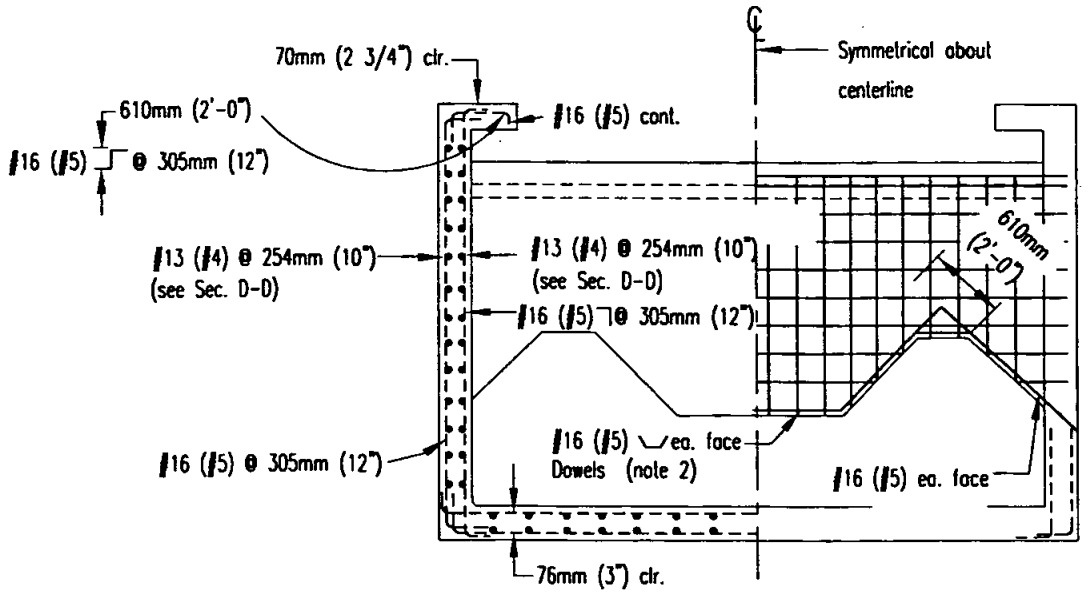

SECTION D–D

Revision	By	Approved	Date
ORIGINAL		Kercheval	12/75
Add Metric		T. Stanton	03/03
Reformatted		T. Stanton	04/06

SAN DIEGO REGIONAL STANDARD DRAWING

CONCRETE ENERGY DISSIPATOR (REINFORCEMENT) 900mm (36") TO 1800mm (72") DIAMETER PIPE

RECOMMENDED BY THE SAN DIEGO REGIONAL STANDARDS COMMITTEE

T. Stanton 3/01/2003

Chairperson R.C.E. 19246 Date

DRAWING NUMBER **D-43B**

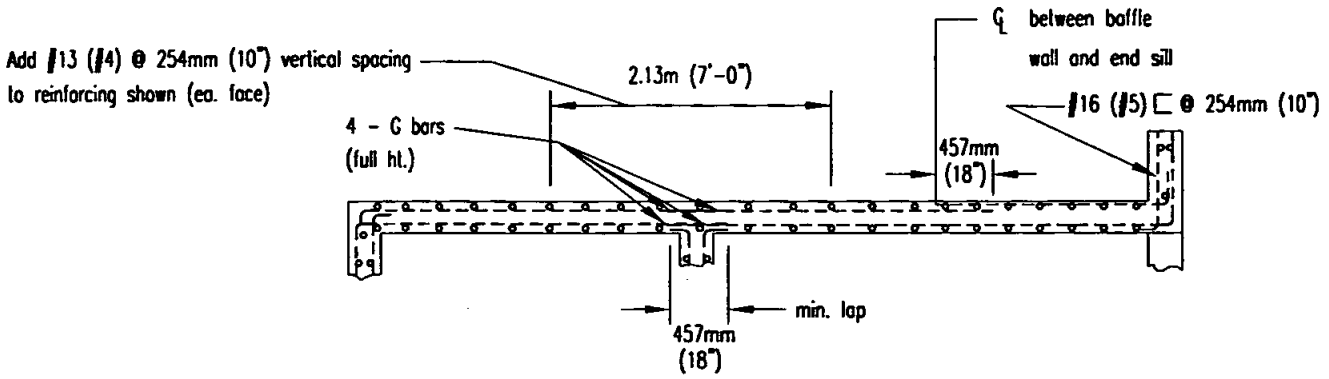

SECTION D–D

Pipe dia. (in.)	914mm (36")	1.07m (42")	1.22m (48")	1.37m (54")	1.52m (60")	1.83m (72")
A bar	#16 (# 5) @ 305mm (12")		#19 (#6) @ 305mm (12")		#22 (#7) @ 305mm (12")	
B bar	#16 (# 5) @ 305mm (12")		#19 (#6) @ 305mm (12")			
C bar	#13 (# 4) @ 305mm (12")		#16 (#5) @ 305mm (12")			
D bar	#13 (# 4) @ 305mm (12")		#16 (#5) @ 305mm (12")		#19 (#6) @ 305mm (12")	
E bar	#13 (# 4) @ 305mm (12")		#16 (#5) @ 305mm (12")			
F bar	#13 (# 4) @ 229mm (9")		#16 (#5) @ 229mm (9")			#19 (#6) @ 229mm (9")
G bar	#22 (# 7)			#36 (# 11)		

NOTES

1. Match location of sidewall reinforcing.
2. Dowels having same size and spacing as wall reinforcing may be used in lieu of continuous bars at contractors option.
3. Match location of headwall or end sill reinforcing.

Revision	By	Approved	Date
ORIGINAL		Kercheval	12/75
Add Metric		T. Stanton	03/03
Reformatted		T. Stanton	04/06

SAN DIEGO REGIONAL STANDARD DRAWING

CONCRETE ENERGY DISSIPATOR [REINFORCEMENT] 900mm (36") TO 1800mm (72") DIAMETER PIPE

RECOMMENDED BY THE SAN DIEGO REGIONAL STANDARDS COMMITTEE

T. Stanton 3/10/2003

Chairperson R.C.E. 19246 Date

DRAWING NUMBER **D-43C**

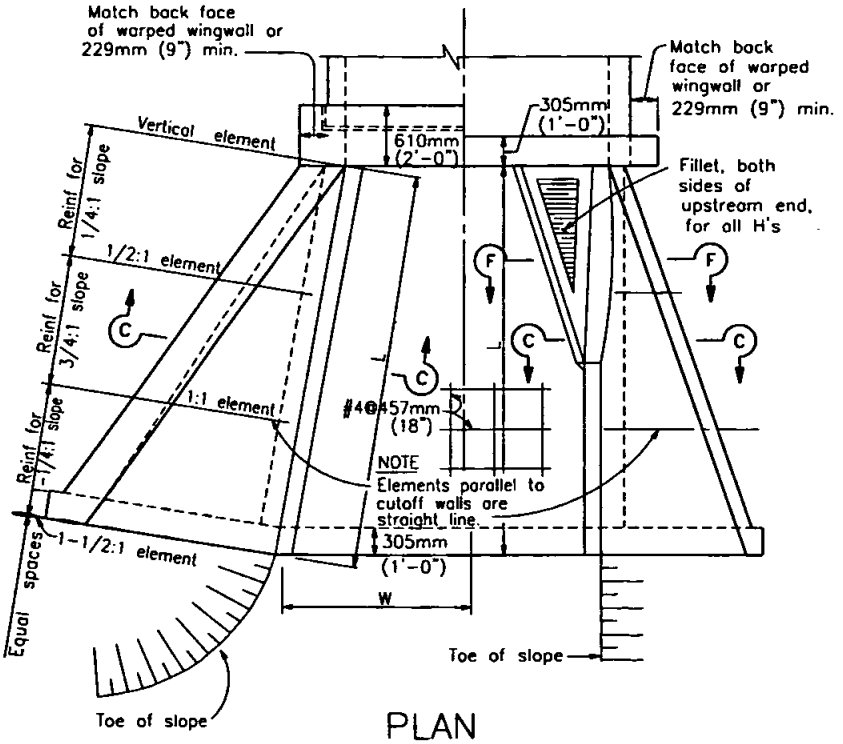

PLAN

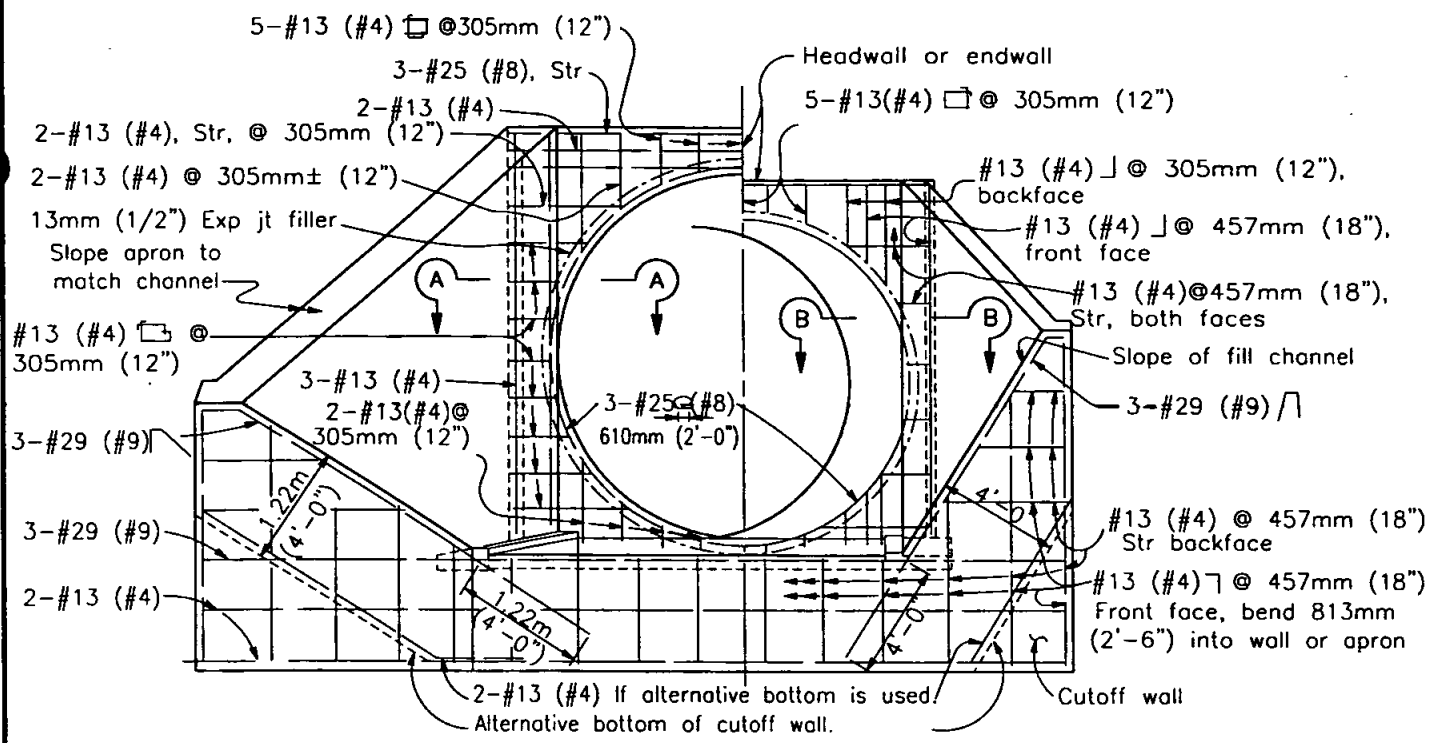

TYPICAL FOR MAXIMUM H >3.05m (10') TYPICAL FOR MAXIMUM H< 3.05m (10')

END ELEVATION

If at upstream end, fillet is not shown

Revision	By	Approved	Date
ORIGINAL		Kercheval	12/75
Add Metric		T. Stanton	03/03
Reformatted		T. Stanton	04/06

SAN DIEGO REGIONAL STANDARD DRAWING

PIPE CULVERT - HEADWALLS, ENDWALLS & WARPED WINGWALLS

RECOMMENDED BY THE SAN DIEGO REGIONAL STANDARDS COMMITTEE

3/01/2003

Chairperson R.C.E. 19246 Date

DRAWING NUMBER **D-44A**

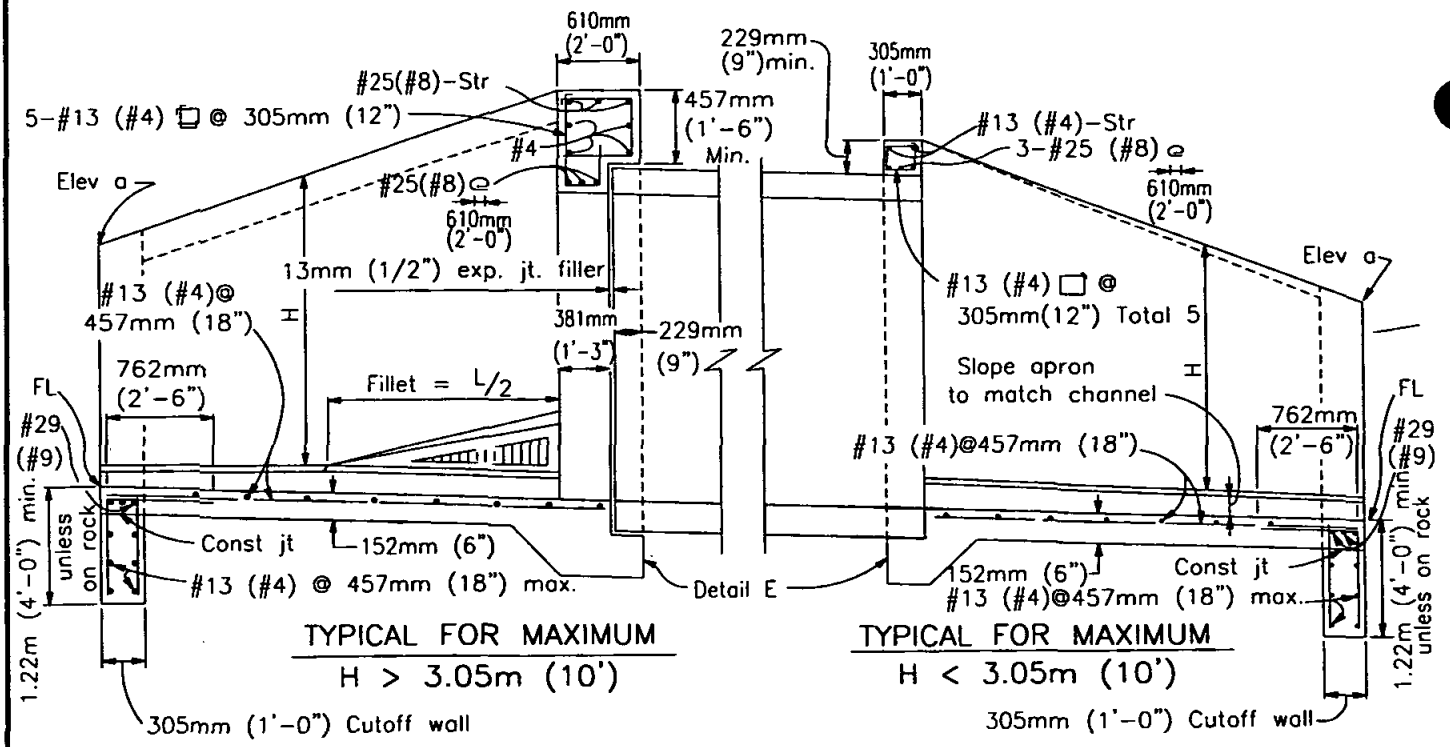

PART LONGITUDINAL SECTION

NOTE

RCP shown. Metal pipe similar except eliminate the expansion joint and use hook bolts @ 483mm(19")± spacing. Size and length provided by manufacturer.

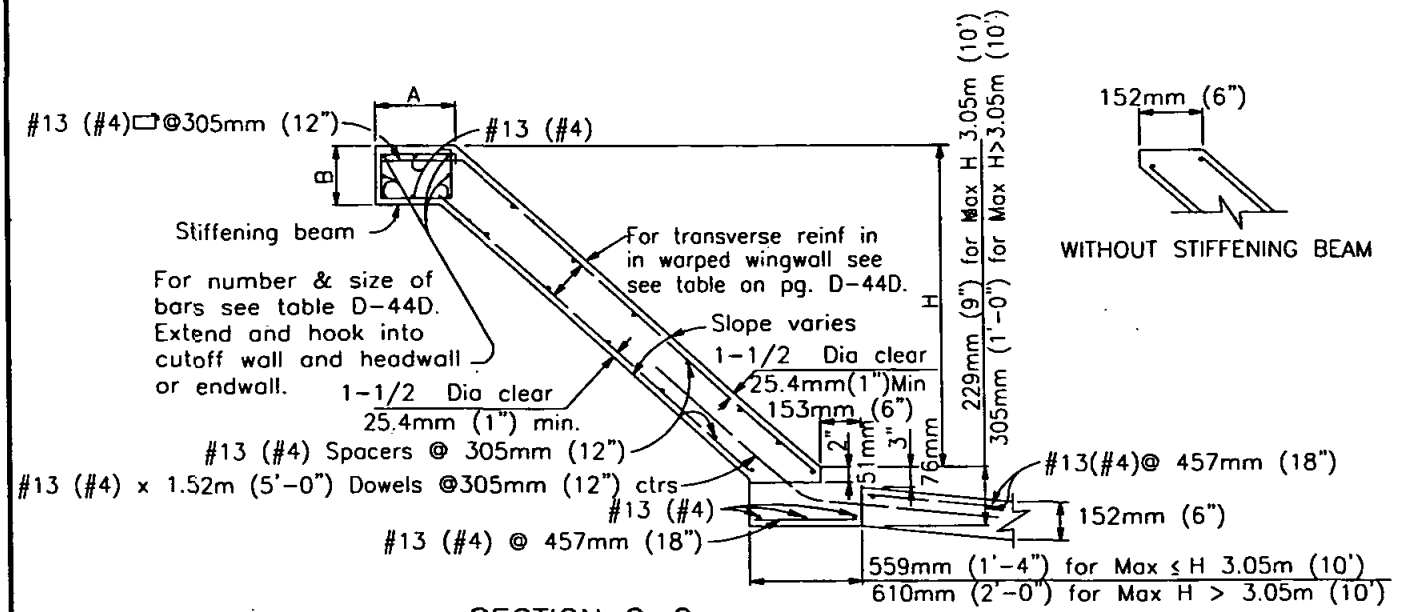

SECTION C-C

Where abrasion is anticipated, increase apron thickness to 178mm (7") minimum to provide 51mm (2") minimum reinforcement coverage.

Revision	By	Approved	Date
ORIGINAL		Kercheval	12/75
Add Metric		T. Stanton	03/03
Reformatted		T. Stanton	04/06

SAN DIEGO REGIONAL STANDARD DRAWING

PIPE CULVERT - HEADWALLS, ENDWALLS & WARPED WINGWALLS

RECOMMENDED BY THE SAN DIEGO REGIONAL STANDARDS COMMITTEE

T. Stanton 3/01/2003

Chairperson R.C.E. 19246 Date

DRAWING NUMBER **D-44B**

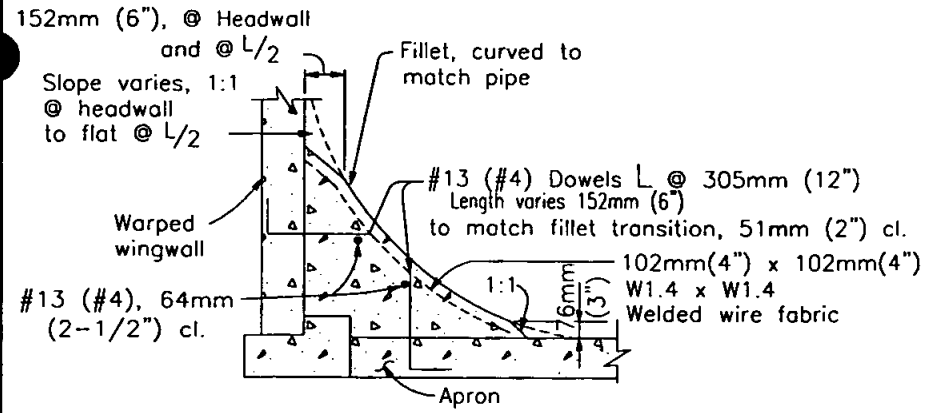

SECTION F-F

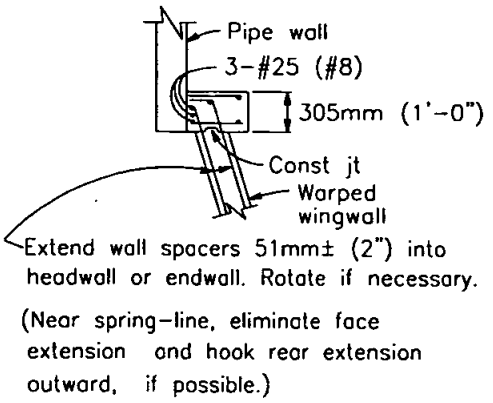

SECTION B-B

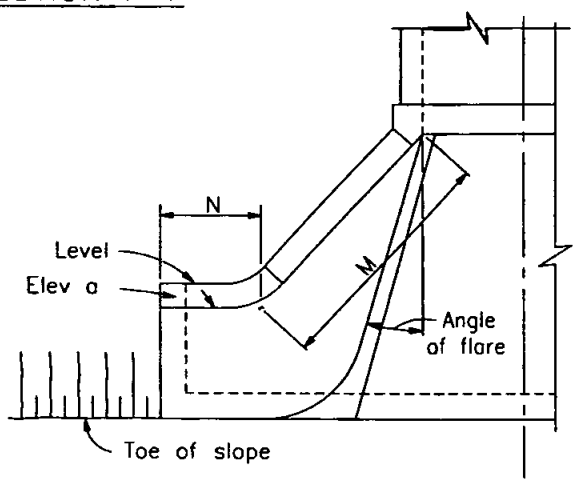

ALTERNATIVE WARPED WINGWALL

Use where additional protection to toe of embankment is required. If at upstream end, fillet is not shown.

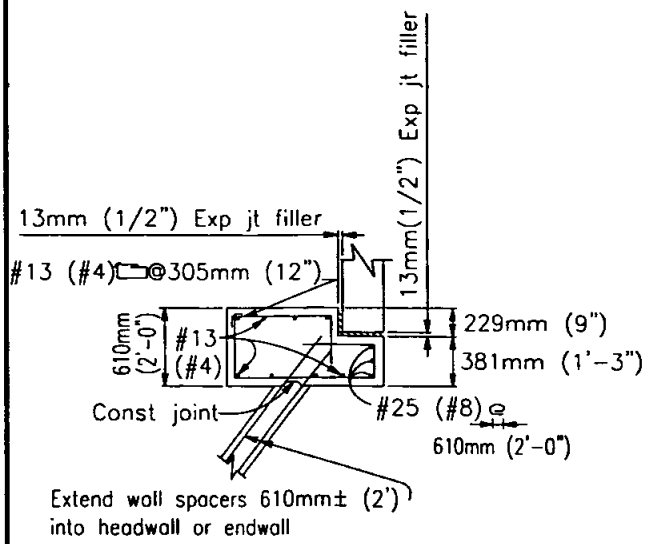

SECTION A-A

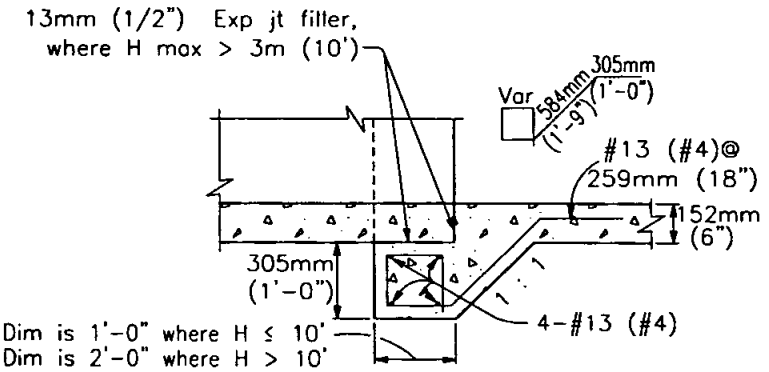

DETAIL E

Revision	By	Approved	Date
ORIGINAL		Kercheval	12/75
Add Metric		T. Stanton	03/03
Reformatted		T. Stanton	04/06

SAN DIEGO REGIONAL STANDARD DRAWING

PIPE CULVERT - HEADWALLS, ENDWALLS & WARPED WINGWALLS

RECOMMENDED BY THE SAN DIEGO REGIONAL STANDARDS COMMITTEE

T. Stanton 3/01/2003

Chairperson R.C.E. 19246 Date

DRAWING NUMBER **D-44C**

WARPED WINGWALLS – IMPERIAL (All measurements in Feet and/or Inches unless otherwise noted)

WALL DIMENSIONS AND REINFORCING

Element Slope	H	8'or less	10'	12'	14'	16'	18'	20'
1/4:1	Front face reinf	#4@12	#4@ 7	#5@ 7	#5@ 5	#6@ 6	#7@ 7	#7@ 6
	Rear face reinf	#4@12	#4@12	#4@12	#4@12	#4@12	#4@12	#4@12
3/4:1	Front face reinf	#4@12	#4@12	#4@12	#4@12	#4@10	#4@ 8	#4@ 6
	Rear face reinf	#4@12	#4@12	#4@12	#4@10	#4@ 7	#4@ 6	#5@ 8
1-1/4:1	Front face reinf	#4@12	#4@12	#4@12	#4@12	#4@12	#4@12	#4@12
	Rear face reinf	#4@ 8	#4@ 8	#4@ 5	#5@ 6	#6@ 7	#6@ 6	#7@ 6
D at Cutoff Wall		6"	6"	6"	7-1/2"	8"	9-1/2"	11"
D at Culvert		6"	6"	6"	8"	9-1/2"	11"	1'-1"

STIFFENING BEAM DIMENSIONS AND REINFORCING

H max \ L	12'	14'	16'	18'	20'	25'	30'	35'	40' or more
6'	No beam. Place 2-#6 in each face along top of wall.								
8'									
10'		A= 1'-0"							
12'		B= 9"							
14'		Total 6-#6				A= 1'-6"			
16'				B= 1'-0"				A= 1'-10"	
18'				Total 6-#7			B=1'-0"		A=2'-0"
20'						Total 6-#8	B= 1'-6"		
							Total 8-#9		

WARPED WINGWALLS – METRIC (All measurements in Millimeters unless otherwise noted)

WALL DIMENSIONS AND REINFORCING

Element Slope	H	2.44m or less	3.05m	3.66m	4.27	4.88m	5.59m	6.10m
1/4:1	Front face reinf	#13@305	#13@178	#16@178	#16@127	#19@152	#22@178	#22@152
	Rear face reinf	#13@305	#13@305	#13@305	#13@305	#13@305	#13@305	#13@305
3/4:1	Front face reinf	#13@305	#13@305	#13@305	#13@305	#13@254	#13@203	#13@152
	Rear face reinf	#13@305	#13@305	#13@305	#13@254	#13@178	#13@152	#16@203
1-1/4:1	Front face reinf	#13@305	#13@305	#13@305	#13@305	#13@305	#13@305	#13@305
	Rear face reinf	#13@203	#13@203	#13@127	#16@152	#19@178	#19@152	#22@152
D at Cutoff Wall		152	152	152	191	203	241	279mm
D at Culvert		152	152	152	203	241	279	330

STIFFENING BEAM DIMENSIONS AND REINFORCING

H max \ L	3.66m	3.27m	4.88m	5.49m	6.10m	7.62m	9.14m	10.7m	12m or more
1.83m	No beam. Place 2-#13 in each face along top of wall.								
2.43m									
3.05m		A= 305							
3.66m		B= 229				A= 457			
4.27m		Total 6-#19			B= 305			A= 559	
4.88m				Total 6-#22			B=305		A=610
5.49m						Total 6-#25		B= 457	
6.10m							Total 8-#29		

NOTES:

Walls designed for 610mm (2') surcharge; earth density = 55kg / 0.029 cu m (120 # / cu. ft.); equivalent fluid pressure = 16.4kg / cu m (36 #/cu. ft.) Vary D of warped wall uniformly from that at cutoff wall to that at culvert, for maximum H > 3.65m (12'). Dimensions L, W, H, M.

Revision	By	Approved	Date
ORIGINAL		Kercheval	12/75
Add Metric		T. Stanton	03/03
Reformatted	T. Stanton	T. Stanton	04/06

SAN DIEGO REGIONAL STANDARD DRAWING

PIPE CULVERT - HEADWALLS, ENDWALLS & WARPED WINGWALLS

RECOMMENDED BY THE SAN DIEGO REGIONAL STANDARDS COMMITTEE

Chairperson R.C.E. 19246 Date 3/01/2003

DRAWING NUMBER D-44D

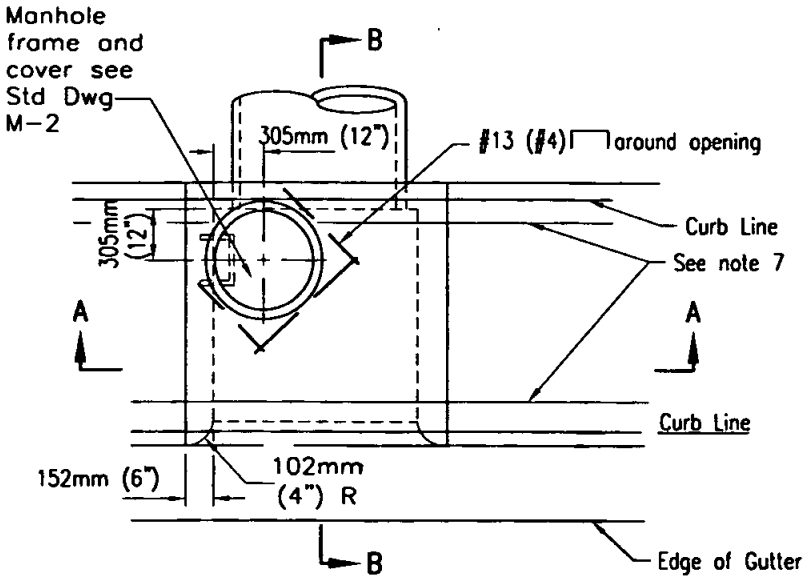

PLAN

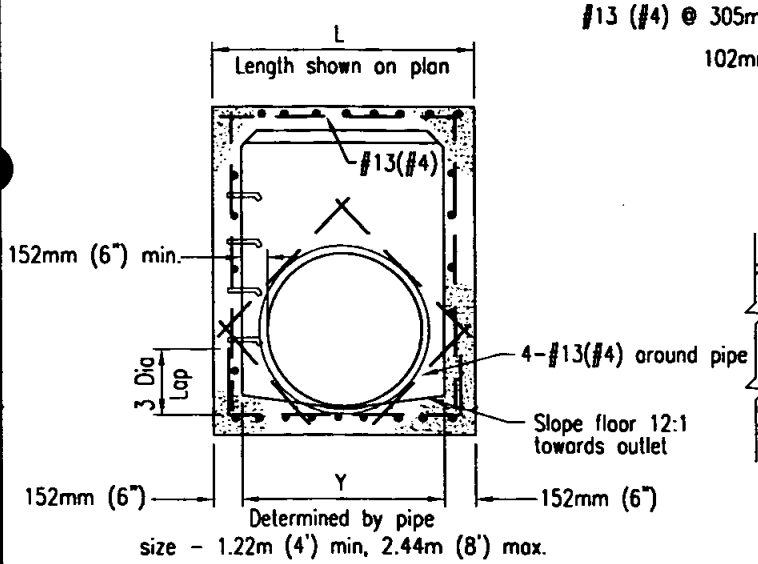

SECTION A-A

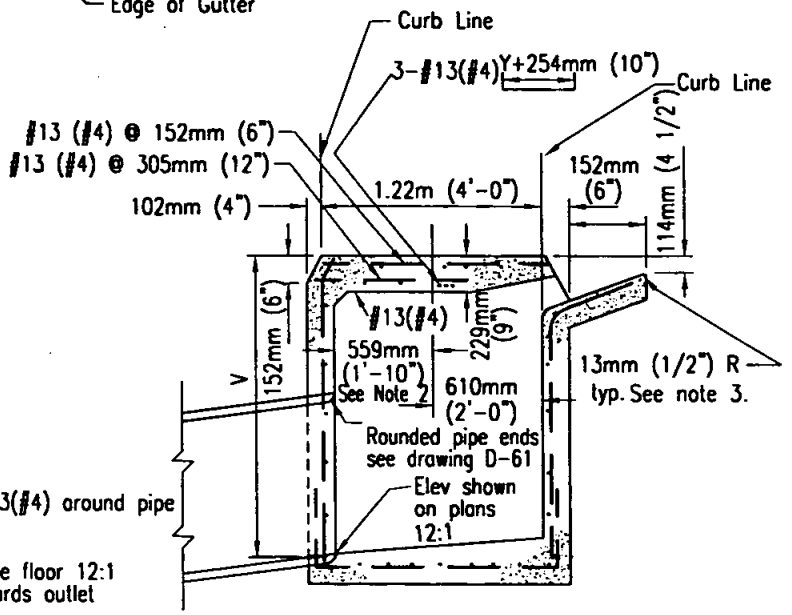

SECTION B-B

NOTES

1. See Standard Drawings D-11 & D-12 for additional notes and details.
2. Dimension shown becomes 610mm (2'-0") when opening on both sides. Adjust manhole as required.
3. Exposed edges of concrete shall be rounded with a radius of 13mm (1/2")
4. When V exceeds 1.22m (4') steps shall be installed. See Standard Drawing D-11 for details.
5. Concrete gutter to match adjacent gutters.
6. An expansion joint shall be placed at the ends of the inlet where the curb is to adjoin.
7. Provide 6.35mm (1/4") tooled groove in top slab in line with back of adjacent curb.
8. Maintain 38mm (1 1/2") clear spacing between reinforcing and surface unless otherwise noted.

LEGEND ON PLANS

Revision	By	Approved	Date
ORIGINAL		H. Hecht	10/82
Add Metric		T. Stanton	03/03
Reformatted		T. Stanton	04/06

SAN DIEGO REGIONAL STANDARD DRAWING

MEDIAN CURB INLET - TYPE J

RECOMMENDED BY THE SAN DIEGO REGIONAL STANDARDS COMMITTEE

T. Stanton 3/10/2003

Chairperson R.C.E. 19246 Date

DRAWING NUMBER **D-45**

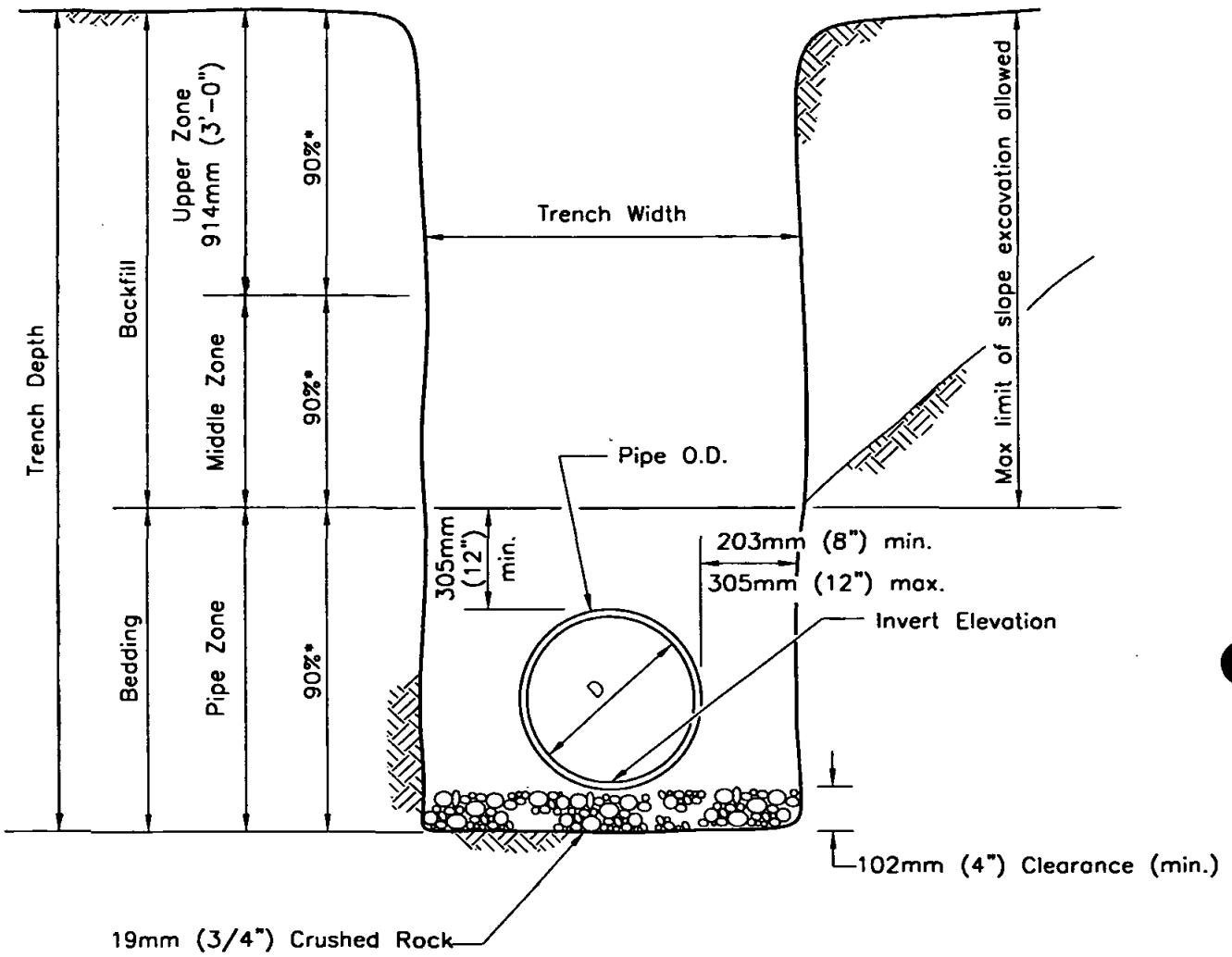

SECTION

NOTES:

1. For trenching on improved streets see Standard Drawing G-24 or G-25 for resurfacing details.
2. (*) indicates minimum relative compaction.

Revision	By	Approved	Date
ORIGINAL		Parkinson	2/95
Add Metric		T. Stanton	03/03
Reformatted		T. Stanton	04/06

SAN DIEGO REGIONAL STANDARD DRAWING

PIPE BEDDING AND TRENCH BACKFILL FOR STORM DRAINS

RECOMMENDED BY THE SAN DIEGO REGIONAL STANDARDS COMMITTEE

T. Stanton 3/01/2003

Chairperson R.C.E. 19246 Date

DRAWING NUMBER D-60

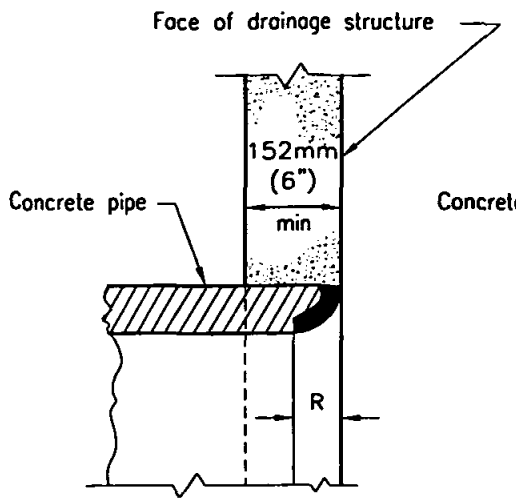

BELL END

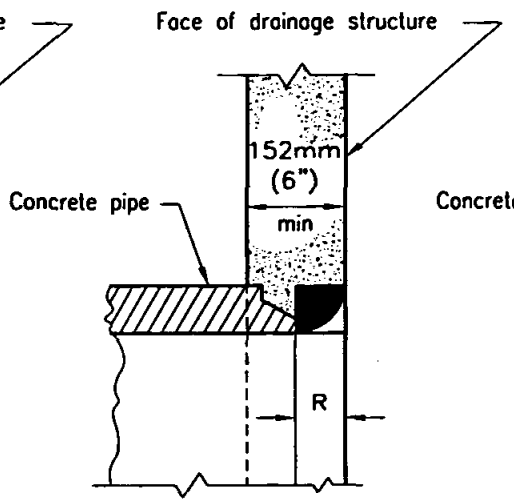

SPIGOT END

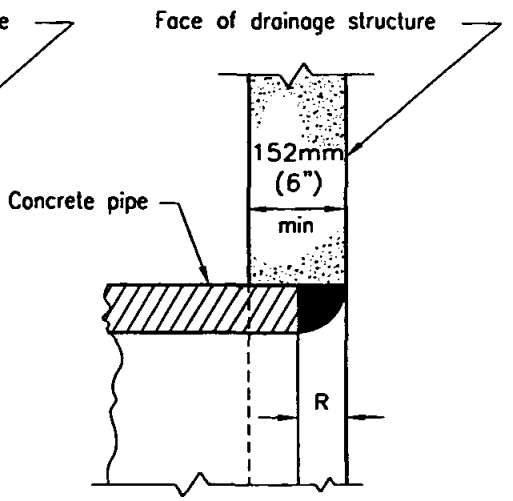

CUT END

R = Thickness of pipe

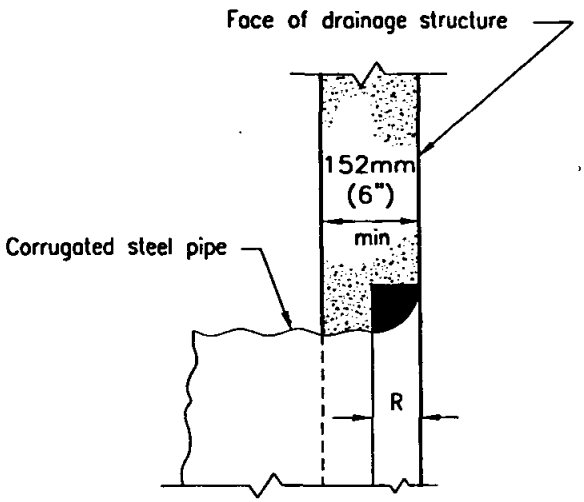

CUT END

$$R = \frac{\text{Inside diameter of pipe}}{10}$$

NOTE

The rounded areas may be built up of cement mortar or poured in place with the drainage structure.

Revision	By	Approved	Date
ORIGINAL		Kercheval	12/75
Add Metric		T. Stanton	03/03
Reviewed		T. Stanton	04/06

SAN DIEGO REGIONAL STANDARD DRAWING

ROUNDED PIPE ENDS IN DRAINAGE STRUCTURES

RECOMMENDED BY THE SAN DIEGO REGIONAL STANDARDS COMMITTEE

T. Stanton 3/10/2003

Chairperson R.C.E. 19246 Date

DRAWING NUMBER D-61

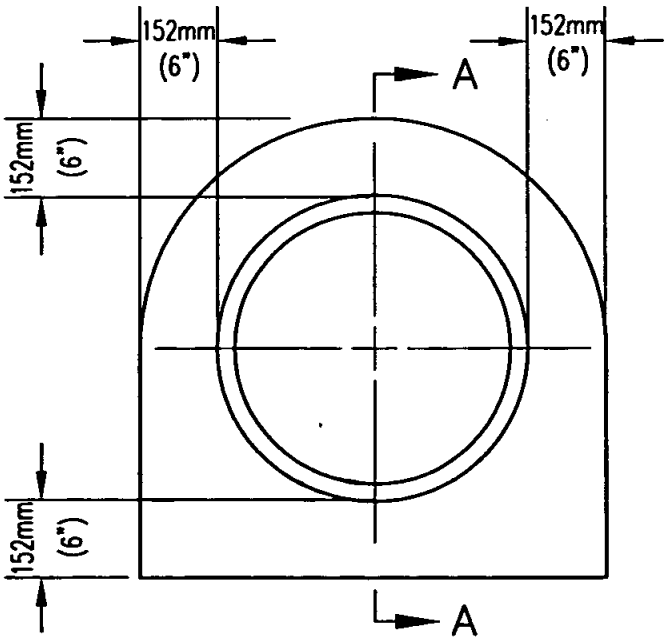

ELEVATION

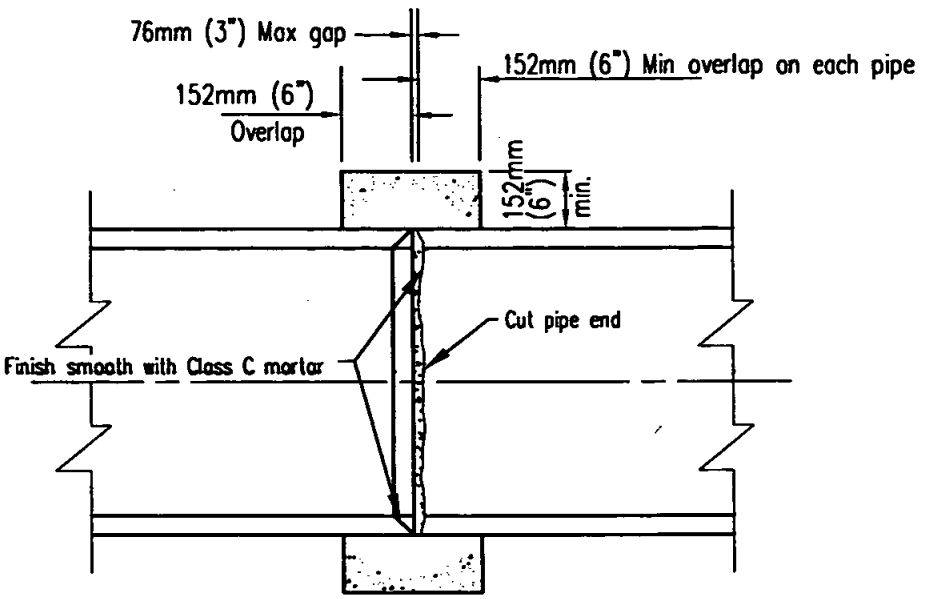

SECTION A–A

NOTES

1. Pipe collar does not have to be finished if covered.
2. Concrete shall be 332 kg/M^3 –C–22Mpa (560–C–3250)
3. Where gap exceeds 76mm (3") but is not more than 152mm (6") an internal form shall be used.

LEGEND ON PLANS

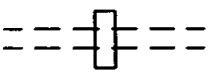

Revision	By	Approved	Date
ORIGINAL		Kercheval	12/75
Add Metric		T. Stanton	03/03
Reviewed		T. Stanton	04/06

SAN DIEGO REGIONAL STANDARD DRAWING

PIPE COLLAR

RECOMMENDED BY THE SAN DIEGO REGIONAL STANDARDS COMMITTEE

T. Stanton 3/10/2003

Chairperson R.C.E. 19246 Date

DRAWING NUMBER D-62

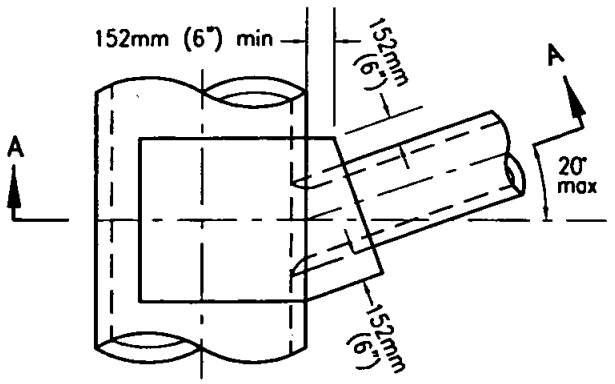

PLAN
SKEWED CONNECTION

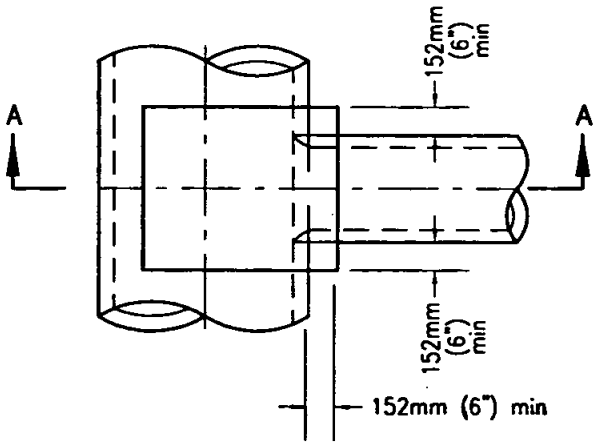

PLAN

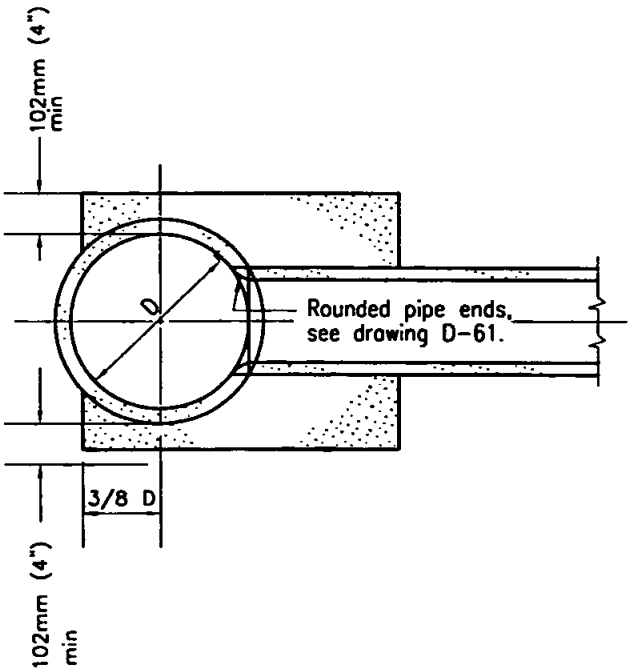

SECTION A–A

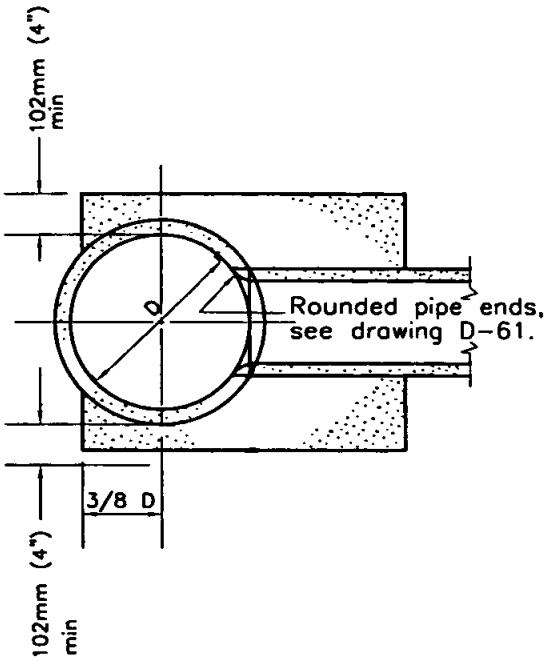

SECTION B–B

LEGEND ON PLANS

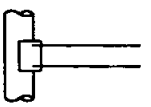

NOTES

1. The end of connecting pipe shall not project into the waterway of the larger pipe.
2. The larger pipe shall not be less than 610mm (24") ID.
3. The smaller pipe shall not be more than 2/3 the size of the larger pipe.
4. Concrete shall be 279kg/M^3 -C-14-Mpa (470-C-2000).

Revision	By	Approved	Date
ORIGINAL		Kerchevol	12/75
Add Metric		T. Stanton	03/03
Reviewed		T. Stanton	04/06

SAN DIEGO REGIONAL STANDARD DRAWING

CONCRETE LUG

RECOMMENDED BY THE SAN DIEGO REGIONAL STANDARDS COMMITTEE

T. Stanton 3/10/2003

Chairperson R.C.E. 19246 Date

DRAWING NUMBER **D-63**

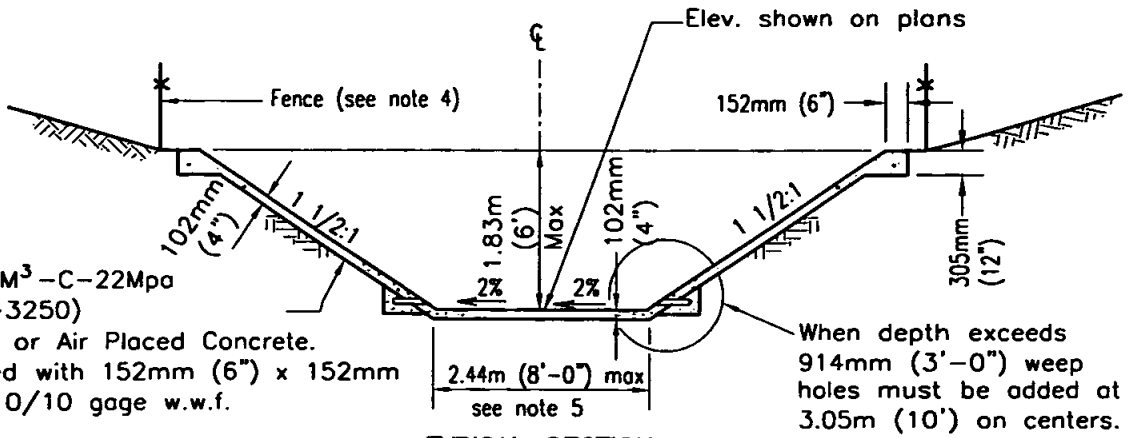

TYPICAL SECTION

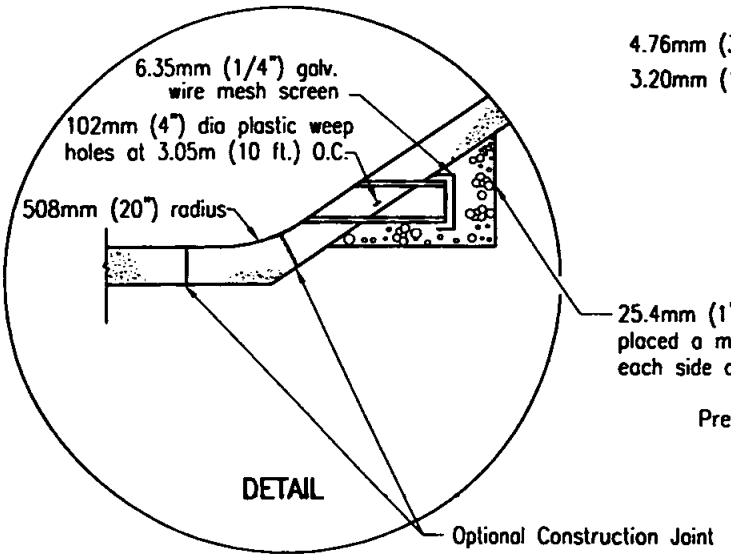

DETAIL

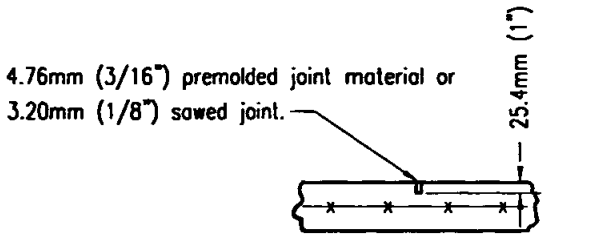

WEAKENED PLANE JOINT

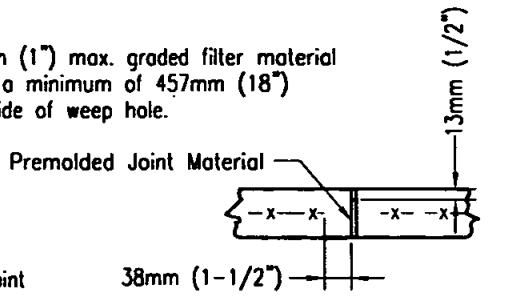

EXPANSION JOINT

NOTES

1. A.C. or clay pipe may be substituted for plastic pipe at weep holes.
2. Weakened plane joints shall be placed every 3.66m (12') to 4.57m (15'). Expansion joints shall be placed at all changes of section and at ends of curves.
3. Cutoff walls shall be constructed at each end of the channel along the full width of section. See Standard Drawing D-72.
4. Chainlink fence shall be as required by Agency.
5. For bottom widths greater than 2.44m (8 feet) see Standard Drawing D-71.
6. Reinforcement shown is minimum.

LEGEND ON PLANS

Revision	By	Approved	Date
ORIGINAL		Kercheval	12/75
Add Metric		T. Stanton	03/03
Reformatted		T. Stanton	04/06

SAN DIEGO REGIONAL STANDARD DRAWING

MINOR DRAINAGE CHANNEL

RECOMMENDED BY THE SAN DIEGO REGIONAL STANDARDS COMMITTEE

T. Stanton 3/10/2003

Chairperson R.C.E. 19246 Date

DRAWING NUMBER D-70

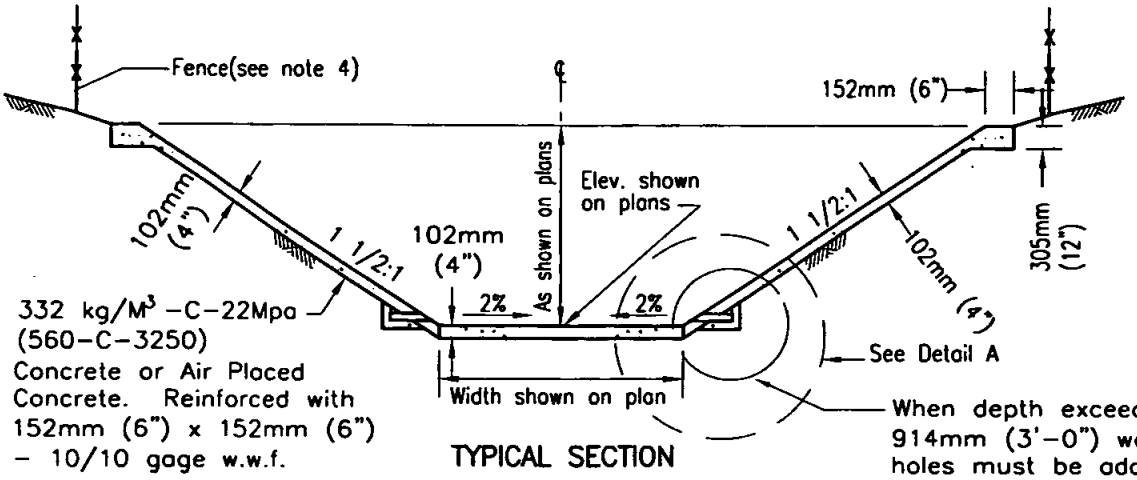

TYPICAL SECTION

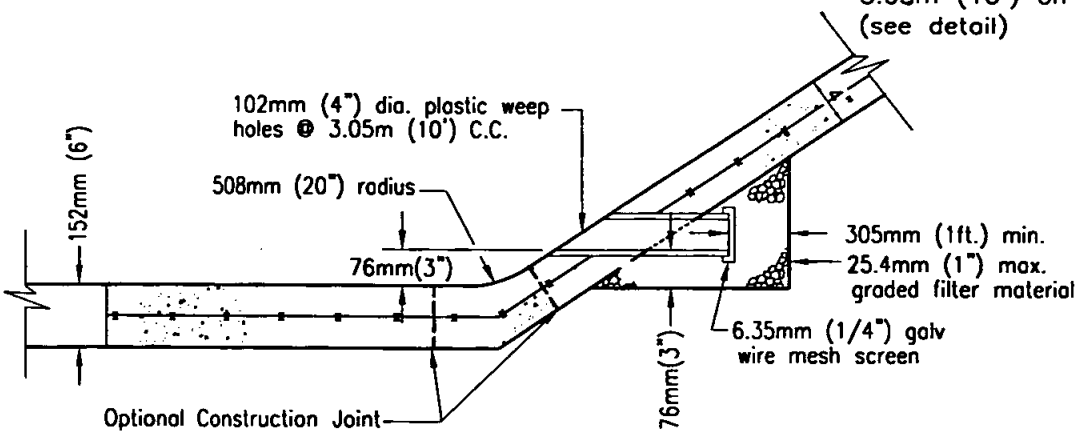

DETAIL A

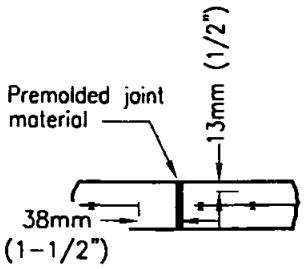

EXPANSION JOINT

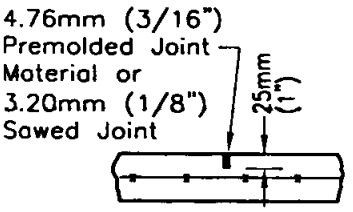

WEAKENED PLANE JOINT

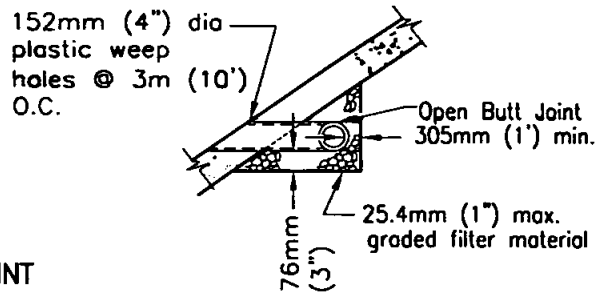

ALTERNATE CONTINUOUS DRAIN

NOTES

1. A.C. or clay pipe may be substituted for plastic pipe at weep holes.
2. Weakened plane joints shall be placed every 3.66m (12') to 4.57m (15'). Expansion joints shall be placed at all changes of section and at ends of curves.
3. Cutoff walls shall be constructed at each end of the channel along the full width of section. See Standard Drawing D-72.
4. Chainlink fence shall be as required by Agency.
5. Reinforcement shown is minimum.

LEGEND ON PLANS

Revision	By	Approved	Date
ORIGINAL		Kercheval	12/75
Add Metric		T. Stanton	03/03
Reviewed		T. Stanton	04/06

SAN DIEGO REGIONAL STANDARD DRAWING

MAJOR DRAINAGE CHANNEL

RECOMMENDED BY THE SAN DIEGO REGIONAL STANDARDS COMMITTEE

T. Stanton 3/10/2003

Chairperson R.C.E. 19246 Date

DRAWING NUMBER D-71

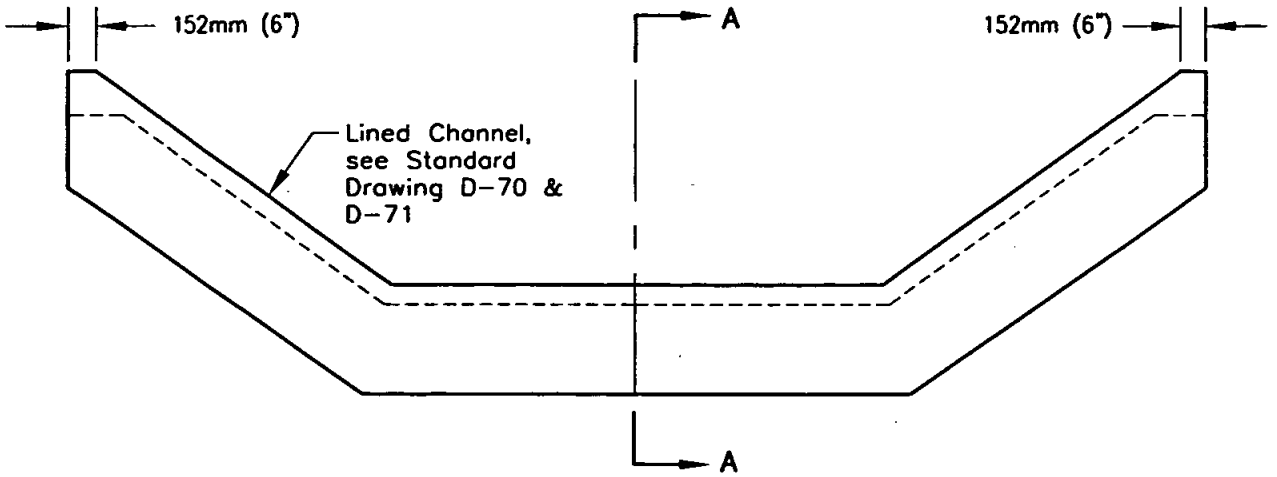

ELEVATION

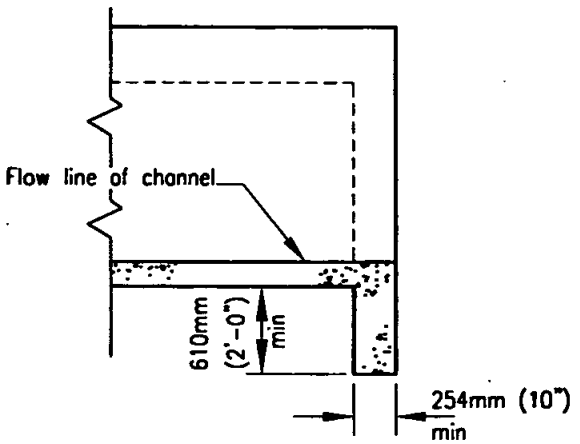

SECTION A–A

LEGEND ON PLANS

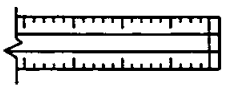

NOTES

1. Thickness and wall depth shall be as shown on plan.
2. Reinforcing in cut off wall shall be the same as that required in channel.
3. Concrete shall be 332 kg/M^3 –C–22Mpa (560–C–3250).

Revision	By	Approved	Date
ORIGINAL		Kercheval	12/75
Add Metric		T. Stanton	03/03
Reviewed		T. Stanton	04/06

SAN DIEGO REGIONAL STANDARD DRAWING

CUTOFF WALL FOR DRAINAGE CHANNEL

RECOMMENDED BY THE SAN DIEGO REGIONAL STANDARDS COMMITTEE

T. Stanton 3/10/2003

Chairperson R.C.E. 19246 Date

DRAWING NUMBER D-72

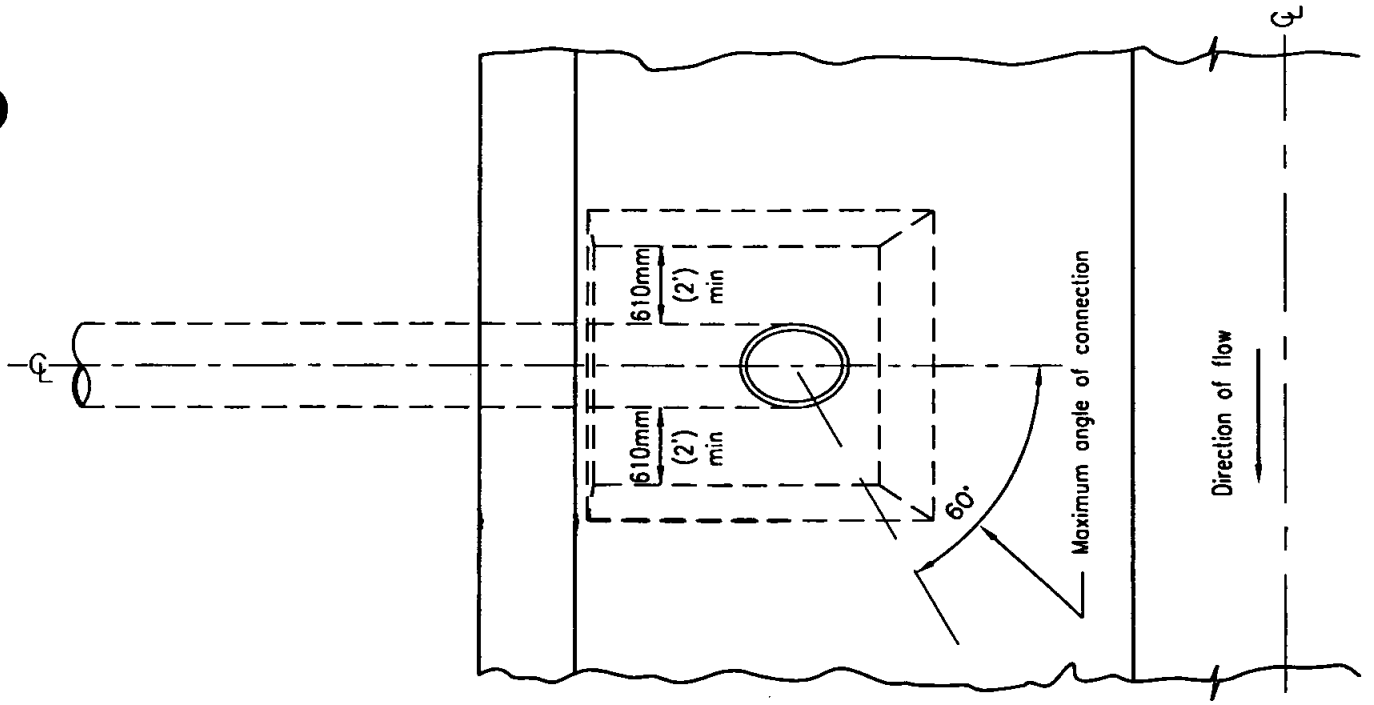

PLAN

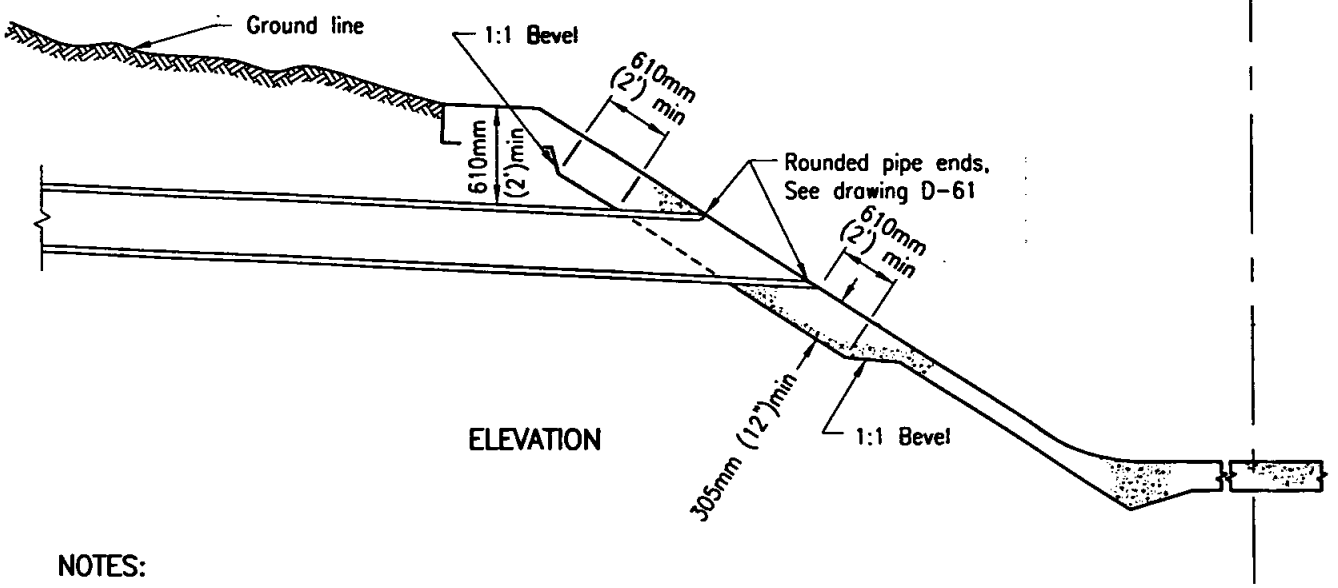

ELEVATION

NOTES:

1. Concrete shall be 332 kg/M^3 -C-22Mpa (560-C-3250).
2. Pipe shall connect to channel as high as possible.
3. The maximum angle of connection is 60° downstream. In no case shall a pipe angle upstream.

LEGEND ON PLANS

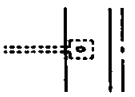

Revision	By	Approved	Date
ORIGINAL		Kerchevol	12/75
Add Metric		T. Stanton	03/03
Reviewed		T. Stanton	04/06

SAN DIEGO REGIONAL STANDARD DRAWING

PIPE TO CHANNEL CONNECTION

RECOMMENDED BY THE SAN DIEGO REGIONAL STANDARDS COMMITTEE

T. Stanton 3/10/2003

Chairperson R.C.E. 19246 Date

DRAWING NUMBER D-73

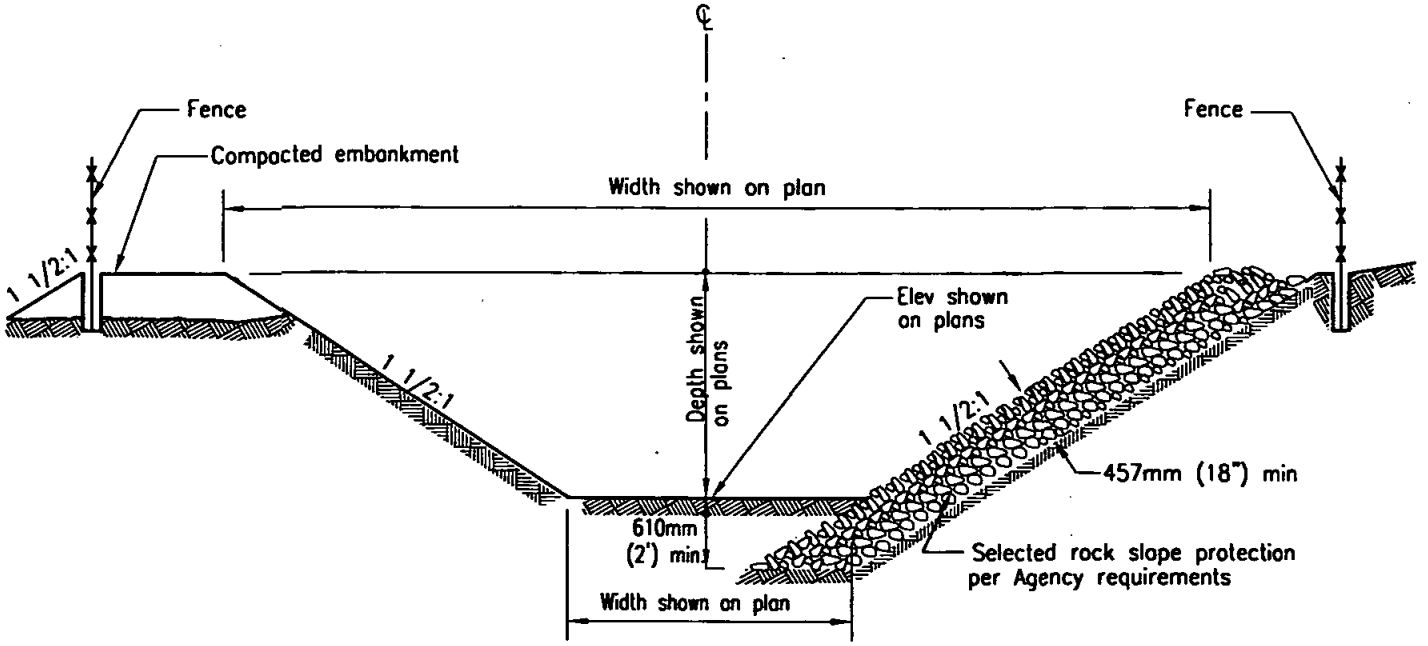

SECTION

NOTE:

The following shall be as required by Agency:

a) Low flow channel
b) Filter blanket
c) Cutoff wall
d) Fence

LEGEND ON PLANS

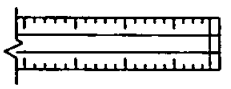

Revision	By	Approved	Date
ORIGINAL		Kercheval	12/75
Add Metric		T. Stanton	03/03
Reviewed		T. Stanton	04/06

SAN DIEGO REGIONAL STANDARD DRAWING

GRADED EARTH CHANNEL

RECOMMENDED BY THE SAN DIEGO REGIONAL STANDARDS COMMITTEE

T. Stanton 3/10/2003

Chairperson R.C.E. 19246 Date

DRAWING NUMBER D-74

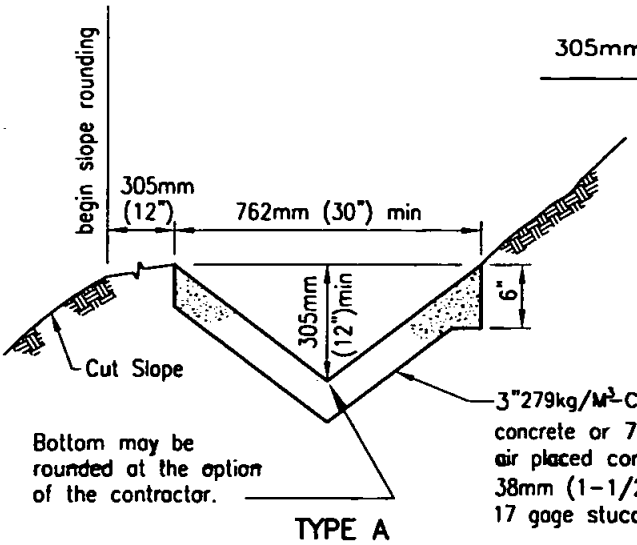

TYPE A

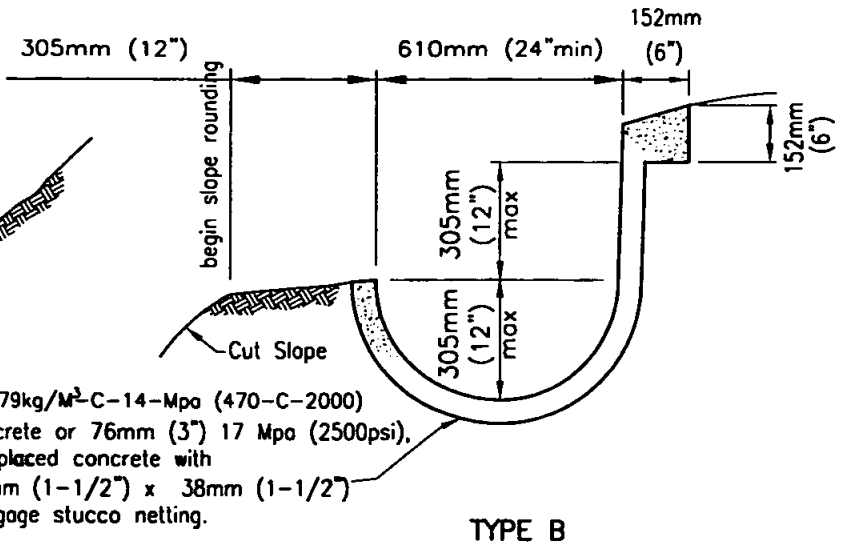

TYPE B

BROW DITCH

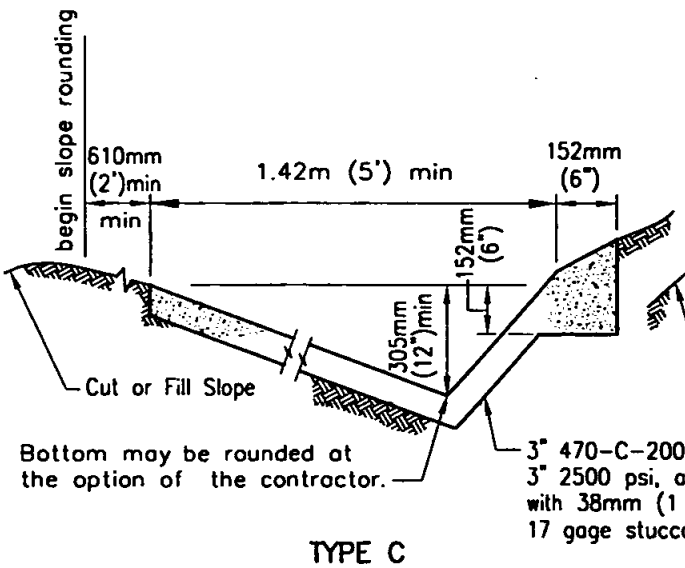

TYPE C

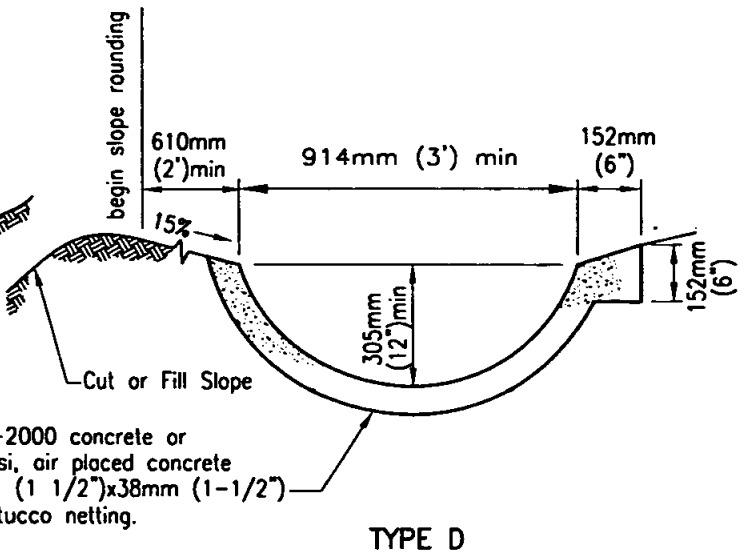

TYPE D

TERRACE DITCH

NOTES

1. Longitudinal slope of lined ditch shall be 2% minimum.
2. Over slope down ditches shall employ 152mm (6") thickened edge section at both sides of ditch.

LEGEND ON PLANS

Revision	By	Approved	Date
ORIGINAL		Kercheval	12/75
Add Metric		T. Stanton	03/03
Reviewed		T. Stanton	04/06

SAN DIEGO REGIONAL STANDARD DRAWING

DRAINAGE DITCHES

RECOMMENDED BY THE SAN DIEGO REGIONAL STANDARDS COMMITTEE

T. Stanton 3/10/2003

Chairperson R.C.E. 19246 Date

DRAWING NUMBER D-75

METRIC TABLE - SPANS UP TO 1.22M (all measuements in millimeters unless otherwise noted).

SPAN			610		914			1.22m						1.52m											
HEIGHT			457	610	610	914		610	914		1.22m			610		914		1.22m				1.52m			
STRENGTH CLASSIFICATION			A	A	A	A	B	A	A	B	A	B	C	A	B	A	B	A	B	C	D	A	B	C	D
MAX FILL OVER TOP			1.68m		965	965	1.68m	711	711	940	711	940	1.27m	305	686	305	686	279	660	889	1.17m	279	635	889	1.17m
CONC.	Top Slab	T_1	152	152	159	159	203	178	178	203	178	203	229	191	203	191	203	191	203	241	267	191	203	241	267
CONC.	Bottom Slab	T_2	152	152	159	159	203	178	178	203	178	203	229	152	203	152	203	152	203	254	273	152	203	254	273
CONC.	Sidewalls	T_3	152	152	152	152	152	152	152	152	152	152	152	152	152	152	152	152	152	152	152	152	152	152	152
Reinforcing Steel	"a"	Size Bar "	13	13	13	13	16	16	16	16	16	16	19	16	16	16	16	16	16	19	19	16	16	19	19
Reinforcing Steel	"a"	Spacing	89	89	89	89	102	127	127	114	127	114	127	102	102	102	102	102	102	127	114	102	102	127	114
Reinforcing Steel	"a"	Length	965	965	1.27m	1.27m	1.3m	1.6m	1.6m	1.6m	1.6m	1.6m	1.57m	1.9m	1.9m	1.9m	1.9m	1.9m	1.9m	1.88m	1.88m	1.9m	1.9m	1.88m	1.88m
Reinforcing Steel	"d" Dist. Bars	Top Slab-No. of	2	2	3	3	2	3	5	3	3	3	3	7	3	7	3	7	3		3	7	3		3
Reinforcing Steel	"d" Dist. Bars	Bottom Slab-No. of	2	2	2	2	2	3	3		3		3	3		3		3			3	3	3		3
Reinforcing Steel	"e" Bars	Spacing	457	457	457	457	311	457	457	457	432	330	241	457	457	457	457	457	432	330	279	457	305	216	165
Reinforcing Steel	Spacers	Number	12	12	12	12		12	12		14			14		14		14				16			
QUAN.	Concrete: cubic meter per lin. ft.		13	13.8	17.6	20.7	23.7	22.2	25.3	27.6	27.6	30.6	32.9	24.5	28.3	27.6	31.2	30.6	33.7	39.0	41.3	32.9	34.5	42.1	43.6
QUAN.	Reinf. kg per lin. ft.		12.3	13.2	15.5	16.4	20.9	20.0	20.5	21.4	21.8	23.6	29.0	25.9	25.5	26.8	25.9	27.7	27.3	30.9	34.0	28.6	29.5	35.0	39.5

IMPERIAL TABLE - SPANS UP TO 5' (all measuements in feet and/or inches).

SPAN			2'		3'			4'						5'											
HEIGHT			1'-6"	2'	2'	3'		2'	3'		4'			2'		3'		4'				5'			
STRENGTH CLASSIFICATION			A	A	A	A	B	A	A	B	A	B	C	A	B	A	B	A	B	C	D	A	B	C	D
MAX FILL OVER TOP			66		38	38	66	28	28	37	28	37	50	12	27	12	27	11	26	35	46	11	25	35	46
CONC.	Top Slab	T_1	6	6	6 1/4	6 1/4	8	7	7	8	7	8	9	7 1/2	8	7 1/2	8	7 1/2	8	9 1/2	10 1/2	7 1/2	8	9 1/2	10 1/2
CONC.	Bottom Slab	T_2	6	6	6 1/4	6 1/4	8	7	7	8	7	8	9	6	8	6	8	6	8	10	10 3/4	6	8	10	10 3/4
CONC.	Sidewalls	T_3	6	6	6	6	6	6	6	6	6	6	6	6	6	6	6	6	6	6	6	6	6	6	6
Reinforcing Steel	"a"	Size Bar "	4	4	4	4	5	5	5	5	5	5	6	5	5	5	5	5	5	6	6	5	5	6	6
Reinforcing Steel	"a"	Spacing	3 1/2	3 1/2	3 1/2	3 1/2	4	5	5	4 1/2	5	4 1/2	5	4	4	4	4	4	4	5	4 1/2	4	4	5	4 1/2
Reinforcing Steel	"a"	Length	3-2	3-2	4-2	4-2	4-3	5-3	5-3	5-3	5-3	5-3	5-2	6-3	6-3	6-3	6-3	6-3	6-3	6-2	6-2	6-3	6-3	6-2	6-2
Reinforcing Steel	"d" Dist. Bars	Top Slab-No. of	2	2	3	3	2	3	5	3	3	3	3	7	3	7	3	7	3		3	7	3		3
Reinforcing Steel	"d" Dist. Bars	Bottom Slab-No. of	2	2	2	2	2	3	3		3		3	3		3		3			3	3	3		3
Reinforcing Steel	"e" Bars	Spacing	18	18	18	18	12 1/4	18	18	18	17	13	9 1/2	18	18	18	18	18	17	13	11	18	12	8 1/2	6 1/2
Reinforcing Steel	Spacers	Number	12	12	12	12		12	12		14			14		14		14				16			
QUAN.	Concrete: C.Y. per lin. ft.		17	18	23	27	31	29	33	36	36	40	43	32	37	36	41	40	44	51	54	43	48	55	57
QUAN.	Reinf. lbs per lin. ft.		27	29	34	36	46	44	45	47	48	52	64	57	56	59	57	61	60	68	75	63	65	77	87

NOTE:
For boxes of height less than that shown in table, use next greater table height slabs, wall dimensions and reinforcing steel, and make necessary changes in bar lengths, number of spacers and quantities.

Revision	By	Approved	Date
ORIGINAL		A.Kercheval	12/75
Add Metric	T. Stanton	T. Stanton	03/03
Reviewed	T. Stanton	T. Stanton	04/06

SAN DIEGO REGIONAL STANDARD DRAWING

SINGLE BOX CULVERT
DETAILS No.1

RECOMMENDED BY THE SAN DIEGO REGIONAL STANDARDS COMMITTEE

Chairperson R.C.E. 19246 Date 3/10/2003

DRAWING NUMBER D-76A

METRIC TABLE - SPAN 1.88m (all measuements in millimeters unless otherwise noted).

SPAN			1.88m																				
HEIGHT			2'		3'		4'			5'				6'					7'				
STRENGTH CLASSIFICATION			A	B	A	B	A	B	C	A	B	C	D	A	B	C	D	E	A	B	C	D	E
MAX FILL OVER TOP			254	457	254	457	254	457	635	229	457	635	914	229	432	635	914	1.14m	229	432	635	914	1.14m
CONC.	Top Slab	T_1	210	210	210	210	210	210	235	210	210	235	279	210	210	235	279	305	210	210	235	279	305
CONC.	Bottom Slab	T_2	172	203	172	203	172	203	248	184	210	305	286	184	210	267	286	311	184	210	267	286	311
CONC.	Sidewalls	T_3	152	152	152	152	152	152	152	152	152	152	152	152	152	152	159	178	152	152	159	178	197
Reinforcing Steel	"a"	Size Bar "	16	16	16	16	16	16	19	16	16	19	19	16	16	19	22	22	16	16	19	22	22
Reinforcing Steel	"a"	Spacing	102	102	102	102	102	102	127	102	102	127	4 1/2	102	102	127	5 1/2	5	102	102	127	140	127
Reinforcing Steel	"a"	Length	2.21m	2.21m	2.21m	2.21m	2.21m	2.21m	2.18m	2.21m	2.21m	2.18m	2.18m	2.21m	2.21m	2.18m	2.21m	2.26m	2.21m	2.21m	2.18m	2.26m	2.29m
Reinforcing Steel	"d" Dist. Bars	Top Slab-No. of	7	4	7	4	7	4		7	4		4	7	4		4	4	7	4		4	4
Reinforcing Steel	"d" Dist. Bars	Bottom Slab-No. of	4		4		4			4			4	4			4	4	4			4	4
Reinforcing Steel	"e" Bars	Spacing	457	457	457	457	457	457	432	457	394	292	216	432	267	191	152	127	305	191	178	127	114
Reinforcing Steel	Spacers	Number	12		12		14			16				16					18				
QUAN.	Concrete: Cubic Meter per lin. ft.		30.6	32.2	32.9	35.2	36.0	38.3	44.4	44.4	41.3	45.9	50.5	42.9	44.4	49.7	54.3	59.7	45.1	46.7	53.6	59.7	67.3
QUAN.	Reinf. kg per lin. ft.		29.0	28.6	30.0	29.5	31.3	30.4	33.6	31.8	31.8	36.3	41.3	33.2	35.4	41.8	50.8	57.6	36.8	40.9	44.9	57.2	63.1

IMPERIAL TABLE - SPANS 6' (all measuements in feet and/or inches).

SPAN			6'																				
HEIGHT			2'		3'		4'			5'				6'					7'				
STRENGTH CLASSIFICATION			A	B	A	B	A	B	C	A	B	C	D	A	B	C	D	E	A	B	C	D	E
MAX FILL OVER TOP			10	18	10	18	10	18	25	9	18	25	36	9	17	25	36	45	9	17	25	36	45
CONC.	Top Slab	T_1	8 1/4	8 1/4	8 1/4	8 1/4	8 1/4	8 1/4	9 1/4	8 1/4	8 1/4	9 1/4	11	8 1/4	8 1/4	9 1/4	11	12	8 1/4	8 1/4	9 1/4	11	12
CONC.	Bottom Slab	T_2	6 3/4	8	6 3/4	8	6 3/4	8	9 3/4	7 1/4	8 1/4	10	11 1/4	7 1/4	8 1/4	10 1/2	11 1/4	12 1/4	7 1/4	8 1/4	10 1/2	11 1/4	12 1/4
CONC.	Sidewalls	T_3	6	6	6	6	6	6	6	6	6	6	6	6	6	6	6 1/4	7	6	6	6 1/4	7	7 3/4
Reinforcing Steel	"a"	Size Bar "	5	5	5	5	5	5	6	5	5	6	6	5	5	6	7	7	5	5	6	7	7
Reinforcing Steel	"a"	Spacing	4	4	4	4	4	4	5	4	4	5	4 1/2	4	4	5	5 1/2	5	4	4	5	5 1/2	5
Reinforcing Steel	"a"	Length	7-3	7-3	7-3	7-3	7-3	7-3	7-2	7-3	7-3	7-2	7-2	7-3	7-3	7-2	7-3	7-5	7-3	7-3	7-2	7-5	7-6
Reinforcing Steel	"d" Dist. Bars	Top Slab-No. of	7	4	7	4	7	4		7	4		4	7	4		4	4	7	4		4	4
Reinforcing Steel	"d" Dist. Bars	Bottom Slab-No. of	4		4		4			4			4	4			4	4	4			4	4
Reinforcing Steel	"e" Bars	Spacing	18	18	18	18	18	18	17	18	15 1/2	11 1/2	8 1/2	17	10 1/2	7 1/2	6	5	12	7 1/2	7	5	4 1/2
Reinforcing Steel	Spacers	Number	12		12		14			16				16					18				
QUAN.	Concrete: C.Y. per lin. ft.		40	42	43	46	47	50	58	52	54	60	66	56	58	65	71	78	59	61	70	78	88
QUAN.	Reinf. lbs per lin. ft.		64	63	66	65	69	67	74	70	70	80	91	73	78	92	112	127	81	90	99	126	139

NOTE:
For boxes of height less than that shown in table, use next greater table height slabs, wall dimensions and reinforcing steel, and make necessary changes in bar lengths, number of spacers and quantities.

Revision	By	Approved	Date
ORIGINAL		A.Kercheval	12/75
Add Metric	T. Stanton	T. Stanton	03/03
Reviewed		T. Stanton	04/06

SAN DIEGO REGIONAL STANDARD DRAWING

SINGLE BOX CULVERT
DETAILS No.1

RECOMMENDED BY THE SAN DIEGO REGIONAL STANDARDS COMMITTEE

Chairperson R.C.E. 19246 Date 3/10/2003

DRAWING NUMBER D-76B

METRIC TABLE - SPAN 2.13m (all measuements in millimeters unless otherwise noted).

For Imperial table (7' Span) - see drawing D76D

SPAN			2.13m												
HEIGHT			914		1.22m		1.52m			1.83m			2.14		
STRENGTH CLASSIFICATION			A	B	A	B	A	B	C	A	B	C	A	B	C
MAX FILL OVER TOP			406	660	406	660	406	660	889	406	660	889	406	660	889
CONC.	Top Slab	T_1	184	210	184	210	184	210	248	184	210	248	184	210	248
CONC.	Bottom Slab	T_2	191	222	191	222	191	222	267	191	222	267	191	222	267
CONC.	Sidewalls	T_3	152	178	152	178	152	178	216	152	178	216	152	178	216
Reinforcing Steel	"a"	Size Bar "	16	16	16	16	16	16	19	16	16	19	16	16	19
		Spacing	229	178	229	178	229	178	229	229	178	229	229	178	229
		Length	2.03m	2.06m	2.03m	2.06m	2.03m	2.06m	2.08m	2.03m	2.06m	2.08m	2.03m	2.06m	2.08m
	"b"	Size Bar "	16	16	16	16	16	16	19	16	16	19	16	16	19
		Spacing	229	178	229	178	229	178	229	229	178	229	229	178	229
		Dimension "X"	381	406	381	406	381	406	508	381	406	508	381	406	508
		Length	940	965	940	965	940	965	1.17m	940	965	1.17m	940	965	1.17m
	"c"	Size Bar "	16	16	16	16	16	16	19	16	16	19	16	16	19
		Spacing	229	178	229	178	229	178	229	229	178	229	229	178	229
		Dimension "Y"	559	584	559	584	559	584	686	559	584	686	559	584	686
		Length	1.58m	1.53m	1.58m	1.93m	2.18m	2.24m	2.39m	2.49m	2.24m	2.69m	2.80m	2.85m	3.0m
	"c_1"	Size Bar "	16	16	16	16	16	16	19	16	16	19	16	16	19
		Spacing	229	178	229	178	229	178	229	229	178	229	229	178	229
		Dimension "Y"	559	584	559	584	559	584	686	559	584	686	559	584	686
		Length	1.12m	1.17m	1.12m	1.17m	1.12m	1.17m	1.37m	1.12m	1.17m	1.37m	1.12m	1.17m	1.37m
	"d" Bars	Top Slab-No. of	7	4	7	4	7	4	4	7	4	4	7	4	4
		Bottom Slab-No. of	4	4	4	4	4	4	4	4	4	4	4	4	4
	"e" Bars	Spacing	457	457	457	457	457	457	457	457	457	457	457	457	457
	Spacers	Total Number	24		28		28			32			36		
QUAN.	Concrete: cu meters per lin. ft.		36.0	42.9	39.0	45.9	42.1	49.0	59.7	44.4	52.0	64.3	47.4	55.9	68.0
QUAN.	Reinf kg per lin. ft.		48.6	59.0	51.8	62.6	53.6	64.9	76.3	56.7	68.0	80.0	59.9	71.7	83.5

NOTE:
For boxes of height less than that shown in table, use next greater table height slabs, wall dimensions and reinforcing steel, and make necessary changes in bar lengths, number of spacers and quantities.

Revision	By	Approved	Date
ORIGINAL		A.Kercheval	12/75
Add Metric		T. Stanton	03/03
Reviewed	T. Stanton		04/06

SAN DIEGO REGIONAL STANDARD DRAWING

SINGLE BOX CULVERT
DETAILS No.1

RECOMMENDED BY THE SAN DIEGO REGIONAL STANDARDS COMMITTEE

Chairperson R.C.E. 19246 Date 3/01/2003

DRAWING NUMBER D-76C

IMPERIAL TABLE - SPAN 7' (all measuements in feet and/or inches unless otherwise noted).
For Metric Table (2.13m Span) - see drawing D76C

SPAN			7'												
HEIGHT			3'		4'		5'			6'			7'		
STRENGTH CLASSIFICATION			A	B	A	B	A	B	C	A	B	C	A	B	C
MAX FILL OVER TOP			16	26	16	26	16	26	35	16	26	35	16	26	35
CONC.	Top Slab	T_1	7 1/4	8 1/4	7 1/4	8 1/4	7 1/4	8 1/4	9 3/4	7 1/4	8 1/4	9 3/4	7 1/4	8 1/4	9 3/4
CONC.	Bottom Slab	T_2	7 1/2	8 3/4	7 1/2	8 3/4	7 1/2	8 3/4	10 1/2	7 1/2	8 3/4	10 1/2	7 1/2	8 3/4	10 1/2
CONC.	Sidewalls	T_3	6	7	6	7	6	7	8 1/2	6	7	8 1/2	6	7	8 1/2
Reinforcing Steel	"a"	Size Bar "	5	5	5	5	5	5	6	5	5	6	5	5	6
		Spacing	9	7	9	7	9	7	9	9	7	9	9	7	9
		Length	6-8	6-9	6-8	6-9	6-8	6-9	6-10	6-8	6-9	6-10	6-8	6-9	6-10
	"b"	Size Bar "	5	5	5	5	5	5	6	5	5	6	5	5	6
		Spacing	9	7	9	7	9	7	9	9	7	9	9	7	9
		Dimension "X"	1-3	1-4	1-3	1-4	1-3	1-4	1-8	1-3	1-4	1-8	1-3	1-4	1-8
		Length	3-1	3-2	3-1	3-2	3-1	3-2	3-10	3-1	3-2	3-10	3-1	3-2	3-10
	"c"	Size Bar "	5	5	5	5	5	5	6	5	5	6	5	5	6
		Spacing	9	7	9	7	9	7	9	9	7	9	9	7	9
		Dimension "Y"	1-10	1-11	1-10	1-11	1-10	1-11	2-3	1-10	1-11	2-3	1-10	1-11	2-3
		Length	5-2	5-4	6-2	6-4	7-2	7-4	7-10	8-2	8-4	8-10	9-2	9-4	9-10
	"c_1"	Size Bar "	5	5	5	5	5	5	6	5	5	6	5	5	6
		Spacing	9	7	9	7	9	7	9	9	7	9	9	7	9
		Dimension "Y"	1-10	1-11	1-10	1-11	1-10	1-11	2-3	1-10	1-11	2-3	1-10	1-11	2-3
		Length	3-8	3-10	3-8	3-10	3-8	3-10	4-6	3-8	3-10	4-6	3-8	3-10	4-6
	"d" Bars	Top Slab-No. of	7	4	7	4	7	4	4	7	4	4	7	4	4
		Bottom Slab-No. of	4	4	4	4	4	4	4	4	4	4	4	4	4
	"e" Bars	Spacing	18	18	18	18	18	18	18	18	18	18	18	18	18
	Spacers	Total Number	24		28		28			32			36		
QUAN.	Concrete: C.Y. per lin. ft.		47	56	51	60	55	64	78	58	68	84	62	73	89
QUAN.	Reinf lbs per lin. ft.		107	130	114	138	118	143	168	125	150	176	132	158	184

NOTE:
For boxes of height less than that shown in table, use next greater table height slabs, wall dimensions and reinforcing steel, and make necessary changes in bar lengths, number of spacers and quantities.

Revision	By	Approved	Date
ORIGINAL		A.Kerchevall	12/75
Add Metric	T. Stanton	T. Stanton	03/03
Reviewed	T. Stanton	T. Stanton	04/06

SAN DIEGO REGIONAL STANDARD DRAWING

SINGLE BOX CULVERT
DETAILS No.1

RECOMMENDED BY THE SAN DIEGO REGIONAL STANDARDS COMMITTEE

Chairperson R.C.E. 19246 Date 3/10/2003

DRAWING NUMBER D-76D

METRIC TABLE - SPAN 2.44m (all measuements in millimeters unless otherwise noted).

For Imperial table (8' Span) - see drawing D76F

SPAN			2.44m														
HEIGHT			910mm		1.22m		1.52m		1.83m			2.13m			2.44m		
STRENGTH CLASSIFICATION			A	B	A	B	A	B	A	B	C	A	B	C	A	B	C
MAX FILL OVER TOP			4m	6.4m	4m	6.4m	4m	6.4m	4m	6.4m	9.4m	4m	6.4m	9.4m	4m	6.4m	9.4m
CONC.	Top Slab	T_1	184	216	184	216	184	216	184	216	260	184	216	260	184	216	260
CONC.	Bottom Slab	T_2	184	241	184	241	184	241	184	241	292	184	241	292	184	241	292
CONC.	Sidewalls	T_3	165	184	165	184	165	184	165	184	248	165	184	248	165	184	248
Reinforcing Steel	"a"	Size Bar "	16	16	16	16	16	16	16	16	19	16	16	19	16	16	19
		Spacing	229	178	229	178	229	178	229	178	203	229	178	203	229	178	203
		Length	2.31m	2.34m	2.31m	2.34m	2.31m	2.34m	2.31m	2.34m	2.40m	2.31m	2.34m	2.40m	2.31m	2.34m	2.40m
	"b"	Size Bar "	16	16	16	16	16	16	16	16	19	16	16	19	16	16	19
		Spacing	229	178	229	178	229	178	229	178	203	229	178	203	229	178	203
		Dimension "X"	457	483	457	483	457	483	457	483	508	457	483	508	457	483	508
		Length	1.02m	1.04m	1.02m	1.04m	1.02m	1.04m	1.02m	1.04m	1.17m	1.02m	1.04m	1.17m	1.02m	1.04m	1.17m
	"c"	Size Bar "	16	16	16	16	16	16	16	16	19	16	16	19	16	16	19
		Spacing	229	178	229	178	229	178	229	178	203	229	178	203	229	178	203
		Dimension "Y"	610	737	610	737	610	737	610	737	813	610	737	813	610	737	813
		Length	1.02m	1.17m	1.93m	2.08m	2.24m	2.39m	2.54m	2.69m	2.82m	2.84m	3.10m	3.12m	3.15m	3.30m	3.43m
	"c_1"	Size Bar "	16	16	16	16	16	16	16	16	19	16	16	19	16	16	19
		Spacing	9	7	9	7	9	7	9	7	8	9	7	8	9	7	8
		Dimension "Y"	610	737	610	737	610	737	610	737	813	610	686	813	610	737	813
		Length	1.14m	1.35m	1.14m	1.35m	1.14m	1.35m	3-9	1.35m	1.52m	1.14m	1.35m	1.52m	1.14m	1.35m	1.52m
	"d" Bars	Top Slab-No. of	7	5	7	5	7	5	7	5	5	7	5	5	7	5	5
		Bottom Slab-No. of	5	5	5	5	5	5	5	5	5	5	5	5	5	5	5
	"e" Bars	Spacing	457	457	457	457	457	457	457	457	457	457	457	457	457	457	457
	Spacers	Total Number	28		32		32		36			40			40		
QUAN.	Concrete: Cubic Meter per lin. ft.		39.8	50.0	42.9	53.6	46.9	56.6	50.0	60.4	76.5	52.8	63.5	81.1	55.9	67.3	85.7
QUAN.	Reinf kg per lin. ft.		53.6	65.8	56.7	69.9	58.6	63.1	61.7	75.8	95.8	64.9	79.0	99.8	66.7	81.2	102.1

NOTE:
For boxes of height less than that shown in table, use next greater table height slabs, wall dimensions and reinforcing steel, and make necessary changes in bar lengths, number of spacers and quantities.

Revision	By	Approved	Date
ORIGINAL		A.Kercheval	12/75
Add Metric		T. Stanton	03/03
Reviewed		T. Stanton	04/06

SAN DIEGO REGIONAL STANDARD DRAWING

SINGLE BOX CULVERT
DETAILS No.1

RECOMMENDED BY THE SAN DIEGO REGIONAL STANDARDS COMMITTEE

Chairperson R.C.E. 19246 Date 3/01/2003

DRAWING NUMBER D-76E

IMPERIAL TABLE - SPAN 8' (all measuements in feet and/or inches unless otherwise noted).
For Metric table (2.44m Span) - see drawing D76E

SPAN			8'														
HEIGHT			3'		4'		5'		6'			7'			8'		
STRENGTH CLASSIFICATION			A	B	A	B	A	B	A	B	C	A	B	C	A	B	C
MAX FILL OVER TOP			13	21	13	21	13	21	13	21	31	13	21	31	13	21	31
CONC.	Top Slab	T_1	7 1/4	8 1/2	7 1/4	8 1/2	7 1/4	8 1/2	7 1/4	8 1/2	10 1/4	7 1/4	8 1/2	10 1/4	7 1/4	8 1/2	10 1/4
CONC.	Bottom Slab	T_2	7 1/4	9 1/2	7 1/4	9 1/2	7 1/4	9 1/2	7 1/4	9 1/2	11 1/2	7 1/4	9 1/2	11 1/2	7 1/4	9 1/2	11 1/2
CONC.	Sidewalls	T_3	6 1/2	7 1/2	6 1/2	7 1/2	6 1/2	7 1/2	6 1/2	7 1/2	9 3/4	6 1/2	7 1/2	9 3/4	6 1/2	7 1/2	9 3/4
Reinforcing Steel	"a"	Size Bar "	5	5	5	5	5	5	5	5	6	5	5	6	5	5	6
		Spacing	9	7	9	7	9	7	9	7	8	9	7	8	9	7	8
		Length	7-7	7-8	7-7	7-8	7-7	7-8	7-7	7-8	7-10	7-7	7-8	7-10	7-7	7-8	7-10
	"b"	Size Bar "	5	5	5	5	5	5	5	5	6	5	5	6	5	5	6
		Spacing	9	7	9	7	9	7	9	7	8	9	7	8	9	7	8
		Dimension "X"	1-6	1-7	1-6	1-7	1-6	1-7	1-6	1-7	1-8	1-6	1-7	1-8	1-6	1-7	1-8
		Length	3-4	3-5	3-4	3-5	3-4	3-5	3-4	3-5	3-10	3-4	3-5	3-10	3-4	3-5	3-10
	"c"	Size Bar "	5	5	5	5	5	5	5	5	6	5	5	6	5	5	6
		Spacing	9	7	9	7	9	7	9	7	8	9	7	8	9	7	8
		Dimension "Y"	2-0	2-5	2-0	2-5	2-0	2-5	2-0	2-5	2-8	2-0	2-5	2-8	2-0	2-5	2-8
		Length	3-4	3-10	6-4	6-10	7-4	7-10	8-4	8-10	9-3	9-4	9-10	10-3	10-4	10-10	11-3
	"c_1"	Size Bar "	5	5	5	5	5	5	5	5	6	5	5	6	5	5	6
		Spacing	9	7	9	7	9	7	9	7	8	9	7	8	9	7	8
		Dimension "Y"	2-0	2-5	2-0	2-5	2-0	2-5	2-0	2-5	2-8	2-0	2-3	2-8	2-0	2-5	2-8
		Length	3-9	4-5	3-9	4-5	3-9	4-5	3-9	4-5	5-0	3-9	4-5	5-0	3-9	4-5	5-0
	"d" Bars	Top Slab-No. of	7	5	7	5	7	5	7	5	5	7	5	5	7	5	5
		Bottom Slab-No. of	5	5	5	5	5	5	5	5	5	5	5	5	5	5	5
	"e" Bars	Spacing	18	18	18	18	18	18	18	18	18	18	18	18	18	18	18
	Spacers	Total Number	28		32		32		36			40			40		
QUAN.	Concrete: C.Y. per lin. ft.		52	65	56	70	60	74	65	79	100	69	83	106	73	88	112
QUAN.	Reinf lbs per lin. ft.		118	146	125	154	129	139	136	167	211	143	174	220	147	179	225

NOTE:
For boxes of height less than that shown in table, use next greater table height slabs, wall dimensions and reinforcing steel, and make necessary changes in bar lengths, number of spacers and quantities.

Revision	By	Approved	Date
ORIGINAL		A.Kercheval	12/75
Add Metric	T. Stanton	T. Stanton	03/03
Reviewed		T. Stanton	04/06

SAN DIEGO REGIONAL STANDARD DRAWING

SINGLE BOX CULVERT
DETAILS No.1

RECOMMENDED BY THE SAN DIEGO REGIONAL STANDARDS COMMITTEE

Chairperson R.C.E. 19246 Date 3/10/2003

DRAWING NUMBER D-76F

METRIC TABLE - SPAN 3.05m (all measuements in millimeters unless otherwise noted).

For Imperial table (10' Span) - see drawing D76H

SPAN			3.05m																
HEIGHT			1.22m		1.52m		1.83m		2.13m		2.44m			2.74m			3.05m		
STRENGTH CLASSIFICATION			A	B	A	B	A	B	A	B	A	B	C	A	B	C	A	B	C
MAX FILL OVER TOP			2.7m	5.5m	2.7m	5.5m	2.7m	5.5m	2.7m	5.5m	2.4m	5.5m	8.5m	2.4m	5.5m	8.5m	2.4m	5.5m	8.5m
CONC.	Top Slab	T_1	203	241	210	248	210	248	216	248	216	248	311	216	248	311	216	248	311
CONC.	Bottom Slab	T_2	222	267	229	272	229	272	235	279	235	279	337	235	279	337	235	279	337
CONC.	Sidewalls	T_3	184	241	184	241	184	241	184	241	184	241	292	8	241	292	229	241	292
Reinforcing Steel	"a"	Size Bar "	19	19	19	19	19	19	19	19	19	19	22	19	19	22	19	19	22
Reinforcing Steel	"a"	Spacing	279	203	279	203	279	203	279	203	279	203	229	279	203	229	279	203	229
Reinforcing Steel	"a"	Length	2.87m	2.95m	2.87m	2.95m	2.87m	2.95m	2.87m	2.95m	2.87m	2.95m	2.97m	9-6	2.95m	2.97m	2.87m	2.95m	2.97m
Reinforcing Steel	"b"	Size Bar "	16	19	16	19	16	19	16	19	16	19	19	16	19	19	16	19	19
Reinforcing Steel	"b"	Spacing	279	203	279	203	279	203	279	203	279	203	229	279	203	229	279	203	229
Reinforcing Steel	"b"	Dimension "X"	610	610	610	610	610	610	610	610	610	610	782	610	610	782	610	610	782
Reinforcing Steel	"b"	Length	1.17m	1.27m	1.17m	1.27m	1.17m	1.27m	1.17m	1.27m	1.17m	1.27m	1.42m	1.17m	1.27m	1.42m	1.17m	1.27m	1.42m
Reinforcing Steel	"c"	Size Bar "	16	19	16	19	16	19	16	19	16	19	19	16	19	19	16	19	19
Reinforcing Steel	"c"	Spacing	279	203	279	203	279	203	279	203	279	203	229	279	203	229	279	203	229
Reinforcing Steel	"c"	Dimension "Y"	813	1.02m	813	1.02m	813	1.02m	813	1.02m	813	1.02m	1.07m	813	1.02m	1.07m	813	1.02m	1.07m
Reinforcing Steel	"c"	Length	2.11m	2.39m	2.46m	2.69m	2.77m	9-10	10-1	10-10	11-1	11-10	12-3	12-1	12-10	13-3	13-1	13-10	14-3
Reinforcing Steel	"c_1"	Size Bar "	16	19	16	19	16	19	16	19	16	19	19	16	19	19	16	19	19
Reinforcing Steel	"c_1"	Spacing	279	203	279	203	279	203	279	203	279	203	229	279	203	229	279	203	229
Reinforcing Steel	"c_1"	Dimension "Y"	813	1.02m	813	1.02m	813	1.02m	813	1.02m	813	1.02m	1.07m	813	1.02m	1.07m	813	1.02m	1.07m
Reinforcing Steel	"c_1"	Length	1.40m	1.73m	1.40m	1.73m	1.40m	1.73m	1.40m	1.73m	1.40m	1.73m	1.88m	1.40m	1.73m	1.88m	1.40m	1.73m	1.88m
Reinforcing Steel	"d" Bars	Top Slab-No. of	9	5	9	5	9	5	9	5	9	5	5	9	5	5	9	5	5
Reinforcing Steel	"d" Bars	Bottom Slab-No. of	5	5	5	5	5	5	5	5	5	5	5	5	5	5	5	5	5
Reinforcing Steel	"e" Bars	Spacing	457	457	457	457	457	457	457	457	457	457	457	457	457	457	457	457	457
Reinforcing Steel	Spacers	Total Number	32		34		36		40		40			44			48		
QUAN.	Concrete: Cu Meter per lin. ft.		57.4	71.9	62.7	85.6	65.8	85.6	70.4	88.0	74.2	92.6	114.7	81.1	96.4	120.1	90.3	101.0	126.2
QUAN.	Reinf kg per lin. ft.		64.9	100	67.2	103.5	69.9	106.6	72.6	110.7	74.4	113.4	120.3	77.2	117.5	123.9	80.8	121.2	127.5

NOTE:

For boxes of height less than that shown in table, use next greater table height slabs, wall dimensions and reinforcing steel, and make necessary changes in bar lengths, number of spacers and quantities.

Revision	By	Approved	Date
ORIGINAL		A.Kercheval	12/75
Add Metric		T. Stanton	03/03
Reviewed		T. Stanton	04/06

SAN DIEGO REGIONAL STANDARD DRAWING

SINGLE BOX CULVERT

DETAILS No.1

RECOMMENDED BY THE SAN DIEGO REGIONAL STANDARDS COMMITTEE

Chairperson R.C.E. 19246 Date 3/01/2003

DRAWING NUMBER D-76G

Revision	By	Approved	Date
ORIGINAL		A.Kercheval	12/75
Add Metric	T. Stanton	T. Stanton	03/03
Reviewed		T. Stanton	04/06

SAN DIEGO REGIONAL STANDARD DRAWING

SINGLE BOX CULVERT
DETAILS No.1

IMPERIAL TABLE – SPAN 10' (all measuements in feet and/or inches unless otherwise noted).
For Metric table (3.05m Span) – see drawing D76G

SPAN			10'																
HEIGHT			4'		5'		6'		7'		8'			9'			10'		
STRENGTH CLASSIFICATION			A	B	A	B	A	B	A	B	A	B	C	A	B	C	A	B	C
MAX FILL OVER TOP			9	18	9	18	9	18	9	18	8	18	28	8	18	28	8	18	28
CONC.	Top Slab	T_1	8	9 1/2	8 1/4	9 3/4	8 1/4	9 3/4	8 1/2	9 3/4	8 1/2	9 3/4	12 1/4	8 1/2	9 3/4	12 1/4	8 1/2	9 3/4	12 1/4
CONC.	Bottom Slab	T_2	8 3/4	10 1/2	9	10 3/4	9	10 3/4	9 1/4	11	9 1/4	11	13 1/4	9 1/4	11	13 1/4	9 1/4	11	13 1/4
CONC.	Sidewalls	T_3	7 1/4	9 1/2	7 1/4	9 1/2	7 1/4	9 1/2	7 1/4	9 1/2	7 1/4	9 1/2	11 1/2	8	9 1/2	11 1/2	9	9 1/2	11 1/2
Reinforcing Steel	"a"	Size Bar "	6	6	6	6	6	6	6	6	6	6	7	6	6	7	6	6	7
		Spacing	11	8	11	8	11	8	11	8	11	8	9	11	8	9	11	8	9
		Length	9-5	9-8	9-5	9-8	9-5	9-8	9-5	9-8	9-5	9-8	9-9	9-6	9-8	9-9	9-5	9-8	9-9
	"b"	Size Bar "	5	6	5	6	5	6	5	6	5	6	6	5	6	6	5	6	6
		Spacing	11	8	11	8	11	8	11	8	11	8	9	11	8	9	11	8	9
		Dimension "X"	2-0	2-0	2-0	2-0	2-0	2-0	2-0	2-0	2-0	2-0	2-6	2-0	2-0	2-6	2-0	2-0	2-6
		Length	3-10	4-2	3-10	4-2	3-10	4-2	3-10	4-2	3-10	4-2	4-8	3-10	4-2	4-8	3-10	4-2	4-8
	"c"	Size Bar "	5	6	5	6	5	6	5	6	5	6	6	5	6	6	5	6	6
		Spacing	11	8	11	8	11	8	11	8	11	8	9	11	8	9	11	8	9
		Dimension "Y"	2-8	3-4	2-8	3-4	2-8	3-4	2-8	3-4	2-8	3-4	3-6	2-8	3-4	3-6	2-8	3-4	3-6
		Length	6-11	7-10	8-1	8-10	9-1	9-10	10-1	10-10	11-1	11-10	12-3	12-1	12-10	13-3	13-1	13-10	14-3
	"c₁"	Size Bar "	5	6	5	6	5	6	5	6	5	6	6	5	6	6	5	6	6
		Spacing	11	8	11	8	11	8	11	8	11	8	9	11	8	9	11	8	9
		Dimension "Y"	2-8	3-4	2-8	3-4	2-8	3-4	2-8	3-4	2-8	3-4	3-6	2-8	3-4	3-6	2-8	3-4	3-6
		Length	4-7	5-8	4-7	5-8	4-7	5-8	4-7	5-8	4-7	5-8	6-0	4-7	5-8	6-0	4-7	5-8	6-2
	"d" Bars	Top Slab-No. of	9	5	9	5	9	5	9	5	9	5	5	9	5	5	9	5	5
		Bottom Slab-No. of	5	5	5	5	5	5	5	5	5	5	5	5	5	5	5	5	5
	"e" Bars	Spacing	18	18	18	18	18	18	18	18	18	18	18	18	18	18	18	18	18
	Spacers	Total Number	32		34		36		40		40			44			48		
QUAN.	Concrete: C.Y. per lin. ft.		75	94	82	108	86	108	92	115	97	121	150	106	126	157	118	132	165
QUAN.	Reinf lbs per lin. ft.		143	221	148	228	154	235	160	244	164	250	265	170	259	273	178	267	281

NOTE:
For boxes of height less than that shown in table, use next greater table height slabs, wall dimensions and reinforcing steel, and make necessary changes in bar lengths, number of spacers and quantities.

RECOMMENDED BY THE SAN DIEGO REGIONAL STANDARDS COMMITTEE

Chairperson R.C.E. 19246 Date 3/01/2003

DRAWING NUMBER **D-76H**

METRIC TABLE - SPAN 3.66m (all measuements in millimeters unless otherwise noted).

For Imperial table (12' Span) - see drawing D76J

SPAN			3.66m														
HEIGHT			1.83m		2.13m		2.44m		2.74m			3.05m			3.66m		
STRENGTH CLASSIFICATION			A	B	A	B	A	B	A	B	C	A	B	C	A	B	C
MAX FILL OVER TOP			1.5m	4.9m	1.5m	4.9m	1.5m	4.9m	1.5m	4.9m	7.3m	1.5m	4.9m	7.3m	1.5m	4.9m	7.3m
CONC.	Top Slab	T_1	222	286	222	286	222	286	229	286	337	229	286	337	229	286	337
CONC.	Bottom Slab	T_2	222	311	222	311	222	311	229	311	375	229	311	375	229	311	375
CONC.	Sidewalls	T_3	191	267	191	267	191	267	203	267	318	229	267	318	229	267	318
Reinforcing Steel	"a"	Size Bar "	19	22	19	22	19	22	19	22	22	19	22	22	19	22	22
		Spacing	279	254	279	254	279	254	279	254	203	279	254	203	279	254	203
		Length	3.38m	4.27m	3.38m	4.27m	3.38m	4.27m	3.45m	4.27m	3.56m	3.48m	4.27m	3.56m	3.48m	4.27m	3.56m
	"b"	Size Bar "	19	22	19	22	19	22	19	22	22	19	22	22	19	22	22
		Spacing	279	254	279	254	279	254	279	254	203	279	254	203	279	254	203
		Dimension "X"	813	914	813	914	813	914	813	914	914	813	914	914	813	914	914
		Length	1.47m	1.70m	1.47m	1.70m	1.47m	1.70m	1.47m	1.70m	1.70m	1.47m	1.70m	1.70m	1.47m	1.70m	1.70m
	"c"	Size Bar "	19	22	19	22	19	22	19	22	22	19	22	22	19	22	22
		Spacing	279	254	279	254	279	254	279	254	203	279	254	203	279	254	203
		Dimension "Y"	1.14m	1.14m	1.14m	1.14m	1.14m	1.14m	1.14m	1.14m	1.14m	1.14m	1.14m	1.14m	1.14m	1.14m	1.14m
		Length	3.10m	3.15m	3.40m	3.45m	3.71m	3.76m	4.01m	4.06m	4.11m	4.32m	4.37m	4.42m	4.93m	4.98m	5.03m
	"c_1"	Size Bar "	19	22	19	22	19	22	19	22	22	19	22	22	19	22	22
		Spacing	11	10	11	10	11	10	11	10	8	11	10	8	11	10	8
		Dimension "Y"	1.14m	1.14m	1.14m	1.14m	1.14m	1.14m	1.14m	1.14m	1.14m	1.14m	1.14m	1.14m	1.14m	1.14m	1.14m
		Length	1.80m	1.96m	1.80m	1.96m	1.80m	1.98m	1.80m	1.98m	2.03m	1.80m	1.98m	2.03m	1.80m	1.98m	2.03m
	"d" Bars	Top Slab-No. of	10	6	10	6	10	6	10	6	6	10	6	6	10	6	6
		Bottom Slab-No. of	6	6	6	6	6	6	6	6	6	6	6	6	6	6	6
	"e" Bars	Spacing	457	457	457	457	457	457	457	457	457	457	457	457	457	457	457
	Spacers	Total Number	36		44		44		44			48			52		
QUAN.	Concrete: cu m per lin. ft.		76.7	105.5	78.8	110.1	82.6	116.3	90.3	120.6	145.3	99.4	126.2	151.4	107.9	136.1	162.9
QUAN.	Reinf kg per lin. ft.		92.1	133.0	96.7	137.9	98.9	141.1	101.2	143.8	175.6	104.8	147.9	180.1	110.3	154.7	188.3

NOTE:
For boxes of height less than that shown in table, use next greater table height slabs, wall dimensions and reinforcing steel, and make necessary changes in bar lengths, number of spacers and quantities.

Revision	By	Approved	Date
ORIGINAL		A.Kercheval	12/75
Add Metric		T. Stanton	03/03
Reviewed		T. Stanton	04/06

SAN DIEGO REGIONAL STANDARD DRAWING

SINGLE BOX CULVERT

DETAILS No.1

RECOMMENDED BY THE SAN DIEGO REGIONAL STANDARDS COMMITTEE

Chairperson R.C.E. 19246 Date 3/01/2005

DRAWING NUMBER D-76I

IMPERIAL TABLE - SPAN 12' (all measuements in feet and/or inches unless otherwise noted).

For Metric table (3.66m Span) - see drawing D76I

SPAN			12'														
HEIGHT			6'		7'		8'		9'			10'			12'		
STRENGTH CLASSIFICATION			A	B	A	B	A	B	A	B	C	A	B	C	A	B	C
MAX FILL OVER TOP			5	16	5	16	5	16	5	16	24	5	16	24	5	16	24
CONC.	Top Slab	T_1	8 3/4	11 1/4	8 3/4	11 1/4	8 3/4	11 1/4	9	11 1/4	13 1/4	9	11 1/4	13 1/4	9	11 1/4	13 1/4
CONC.	Bottom Slab	T_2	8 3/4	12 1/4	8 3/4	12 1/4	8 3/4	12 1/4	9	12 1/4	14 3/4	9	12 1/4	14 3/4	9	12 1/4	14 3/4
CONC.	Sidewalls	T_3	7 1/2	10 1/2	7 1/2	10 1/2	7 1/2	10 1/2	8	10 1/2	12 1/2	9	10 1/2	12 1/2	9	10 1/2	12 1/2
Reinforcing Steel	"a"	Size Bar "	6	7	6	7	6	7	6	7	7	6	7	7	6	7	7
		Spacing	11	10	11	10	11	10	11	10	8	11	10	8	11	10	8
		Length	11-3	11-6	11-3	11-6	11-3	11-6	11-4	11-6	11-8	11-5	11-6	11-8	11-5	11-6	11-8
	"b"	Size Bar "	6	7	6	7	6	7	6	7	7	6	7	7	6	7	7
		Spacing	11	10	11	10	11	10	11	10	8	11	10	8	11	10	8
		Dimension "X"	2-8	3-0	2-8	3-0	2-8	3-0	2-8	3-0	3-0	2-8	3-0	3-0	2-8	3-0	3-0
		Length	4-10	5-7	4-10	5-7	4-10	5-7	4-10	5-7	5-7	4-10	5-7	5-7	4-10	5-7	5-7
	"c"	Size Bar "	6	7	6	7	6	7	6	7	7	6	7	7	6	7	7
		Spacing	11	10	11	10	11	10	11	10	8	11	10	8	11	10	8
		Dimension "Y"	3-9	3-9	3-9	3-9	3-9	3-9	3-9	3-9	3-9	3-9	3-9	3-9	3-9	3-9	3-9
		Length	10-2	10-4	11-2	11-4	12-2	12-4	13-2	13-4	13-6	14-2	14-4	14-6	16-2	16-4	16-6
	"c_1"	Size Bar "	6	7	6	7	6	7	6	7	7	6	7	7	6	7	7
		Spacing	11	10	11	10	11	10	11	10	8	11	10	8	11	10	8
		Dimension "Y"	3-9	3-9	3-9	3-9	3-9	3-9	3-9	3-9	3-9	3-9	3-9	3-9	3-9	3-9	3-9
		Length	5-11	6-5	5-11	6-5	5-11	6-6	5-11	6-6	6-8	5-11	6-6	6-8	5-11	6-6	6-8
	"d" Bars	Top Slab-No. of	10	6	10	6	10	6	10	6	6	10	6	6	10	6	6
		Bottom Slab-No. of	6	6	6	6	6	6	6	6	6	6	6	6	6	6	6
	"e" Bars	Spacing	18	18	18	18	18	18	18	18	18	18	18	18	18	18	18
	Spacers	Total Number	36		44		44		44			48			52		
QUAN.	Concrete: C.Y. per lin. ft.		99	138	103	144	108	152	118	158	190	130	165	198	141	178	213
QUAN.	Reinf lbs per lin. ft.		203	293	213	304	218	311	223	317	387	231	326	397	243	341	415

NOTES:

For boxes of height less than that shown in table, use next greater table height slabs, wall dimensions and reinforcing steel, and make necessary changes in bar lengths, number of spacers and quantities.

Revision	By	Approved	Date
ORIGINAL		A.Kercheval	12/75
Add Metric	T. Stanton	T. Stanton	03/03
Reviewed		T. Stanton	04/06

SAN DIEGO REGIONAL STANDARD DRAWING

SINGLE BOX CULVERT

DETAILS No.1

RECOMMENDED BY THE SAN DIEGO REGIONAL STANDARDS COMMITTEE

Chairperson R.C.E. 19246 Date 3/01/2003

DRAWING NUMBER D-76J

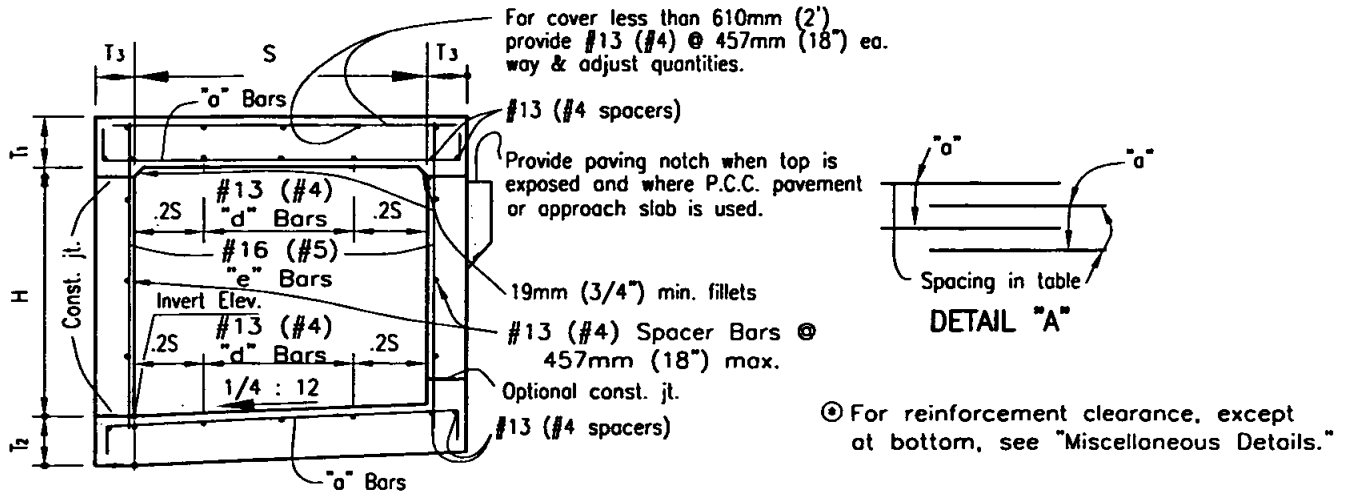

TYPICAL SECTIONS 610mm (2') THRU 1.83m (6') SPANS

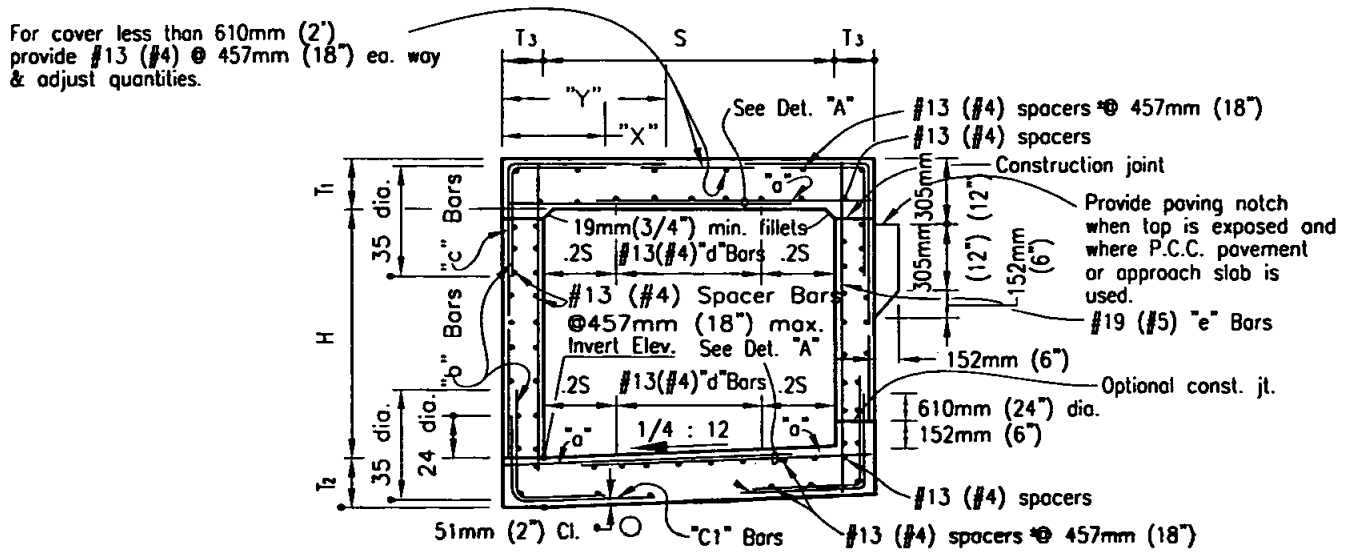

TYPICAL SECTIONS 2.13m (7') THRU 3.66m (12') SPANS

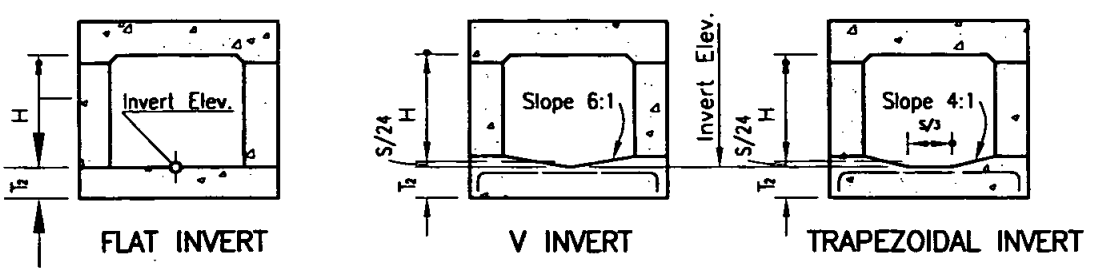

ALTERNATIVE INVERTS
(When shown)

Revision	By	Approved	Date
ORIGINAL		Kercheval	12/75
Add Metric		T. Stanton	03/03
Reviewed		T. Stanton	04/06

SAN DIEGO REGIONAL STANDARD DRAWING

SINGLE BOX CULVERT DETAILS NO.2

RECOMMENDED BY THE SAN DIEGO REGIONAL STANDARDS COMMITTEE

T. Stanton 3/01/2003

Chairperson R.C.E. 19246 Date

DRAWING NUMBER **D-76K**

METRIC TABLE - SPAN 1.22m (all measuements in millimeters unless otherwise noted).

For Imperial table (4' Span) - see drawing D77B

SPAN			1.22m										
HEIGHT			610mm			914mm				1.22m			
STRENGTH CLASSIFICATION			A	B	C	A	B	C	D	A	B	C	D
MAX FILL OVER TOP			3.35m	6.4m	9.75m	3.35m	7.0m	10.4m	14.0m	3.35m	7.0m	10.4m	14.0m
Conc.	Top Slab	T_1	165	165	184	165	165	191	216	165	165	191	216
Conc.	Bottom Slab	T_2	152	184	216	152	191	216	241	152	191	216	241
Conc.	Sidewalls	T_3	152	152	152	152	152	152	152	152	152	152	152
Reinforcing Steel	"a"	Size Bar #	16	13	13	16	13	13	13	16	13	13	13
		Spacing	279	279	229	279	267	216	191	279	267	216	191
		Length	3.12m	3.10m	3.10m	3.12m	3.10m	3.10m	3.10m	3.12m	3.10m	3.10m	3.10m
	"b" or "b_1"	Size Bar #	16	16	16	16	16	16	16	16	16	16	16
		Spacing	279	279	229	279	267	216	191	279	267	216	191
		Length "b"	2.84m	2.84m	2.90m	2.84m	2.84m	2.90m	2.92	2.84m	2.84m	2.90m	2.92
		Length "b_1"	2.84m	9-5	2.90m	2.84m	2.84m	2.90m	2.92	2.84m	2.84m	2.90m	2.92
	"c"	Size Bar #	13	16	16	13	16	16	16	13	16	16	16
		Spacing	279	279	229	279	267	216	191	279	267	216	191
		Length	1.37m	1.37m	1.37m	1.37m	1.37m	1.37m	1.37m	1.37m	1.37m	1.37m	1.37m
	"d" Dist Bars	Top Slab-Tot. No.	10	6	6	10	6	6	6	10	6	6	6
		Bottom Slab-Tot. No.	6	6	6	6	6	6	6	6	6	6	6
	"e" Bars	Size Bar #	13	13	13	13	13	13	13	13	13	13	16
		Spacing	457	457	457	457	457	406	305	457	305	229	254
	Spacers	Number	23			26				29			
Quan.	Concrete: C.Y. per lin. ft.		0.36	0.39	0.44	0.41	0.44	0.48	0.53	0.45	0.48	0.53	0.57
Quan.	Reinf :lbs per lin. ft.		37	34	38	38	36	41	46	40	39	45	50

NOTE:

For boxes of height less than that shown in table, use next greater table height slabs, wall dimensions and reinforcing steel, and make necessary changes in bar lengths, number of spacers and quantities. Number of "d" bars in table is slab total for both cells.

Revision	By	Approved	Date
ORIGINAL		Kercheval	12/75
Add Metric	T. Stanton	T. Stanton	03/03
Reviewed		T. Stanton	04/06

SAN DIEGO REGIONAL STANDARD DRAWING

DOUBLE BOX CULVERT

DETAILS No. 1

RECOMMENDED BY THE SAN DIEGO REGIONAL STANDARDS COMMITTEE

Chairperson R.C.E. 19246 Date 3/10/2003

DRAWING NUMBER D-77A

IMPERIAL TABLE - SPAN 4' (all measuements in feet and/or inches unless otherwise noted).
For Metric Table (1.22m Span) - see drawing D77A

SPAN			4'										
HEIGHT			2'			3'				4'			
STRENGTH CLASSIFICATION			A	B	C	A	B	C	D	A	B	C	D
MAX FILL OVER TOP			11	21	32	11	23	34	46	11	23	34	46
Conc.	Top Slab	T_1	6 1/2	6 1/2	7 1/4	6 1/2	6 1/2	7 1/2	8 1/2	6 1/2	6 1/2	7 1/2	8 1/2
Conc.	Bottom Slab	T_2	6	7 1/4	8 1/2	6	7 1/2	8 1/2	9 1/2	6	7 1/2	8 1/2	9 1/2
Conc.	Sidewalls	T_3	6	6	6	6	6	6	6	6	6	6	6
Reinforcing Steel	"a"	Size Bar #	5	4	4	5	4	4	4	5	4	4	4
		Spacing	11	11	9	11	10 1/2	8 1/2	7 1/2	11	10 1/2	8 1/2	7 1/2
		Length	10-3	10-2	10-2	10-3	10-2	10-2	10-2	10-3	10-2	10-2	10-2
	"b" or "b_1"	Size Bar #	5	5	5	5	5	5	5	5	5	5	5
		Spacing	11	11	9	11	10 1/2	8 1/2	7 1/2	11	10 1/2	8 1/2	7 1/2
		Length "b"	9-4	9-4	9-6	9-4	9-4	9-6	9-7	9-4	9-4	9-6	9-7
		Length "b_1"	9-4	9-5	9-6	9-4	9-4	9-6	9-7	9-4	9-4	9-6	9-7
	"c"	Size Bar #	4	5	5	4	5	5	5	4	5	5	5
		Spacing	11	11	9	11	10 1/2	8 1/2	7 1/2	11	10 1/2	8 1/2	7 1/2
		Length	4-6	4-6	4-6	4-6	4-6	4-6	4-6	4-6	4-6	4-6	4-6
	"d" Dist Bars	Top Slab-Tot. No.	10	6	6	10	6	6	6	10	6	6	6
		Bottom Slab-Tot. No.	6	6	6	6	6	6	6	6	6	6	6
	"e" Bars	Size Bar #	4	4	4	4	4	4	4	4	4	4	5
		Spacing	18	18	18	18	18	16	12	18	12	9	10
	Spacers	Number	23			26				29			
Quan.	Concrete: C.Y. per lin. ft.		0.47	0.51	0.57	0.53	0.57	0.63	0.69	0.59	0.63	0.69	0.75
	Reinf :lbs per lin. ft.		81	74	84	84	79	91	101	87	85	99	111

NOTE:

For boxes of height less than that shown in table, use next greater table height slabs, wall dimensions and reinforcing steel, and make necessary changes in bar lengths, number of spacers and quantities. Number of "d" bars in table is slab total for both cells.

Revision	By	Approved	Date
ORIGINAL		Kercheval	12/75
Add Metric	T. Stanton		03/03
Reviewed	T. Stanton		04/06

SAN DIEGO REGIONAL STANDARD DRAWING

DOUBLE BOX CULVERT
DETAILS No. 1

RECOMMENDED BY THE SAN DIEGO REGIONAL STANDARDS COMMITTEE

Chairperson R.C.E. 19246 Date 3/01/2003

DRAWING NUMBER D-77B

METRIC TABLE - SPAN 1.52m (all measuements in millimeters unless otherwise noted).
For Imperial table (5' Span) - see drawing D77D

SPAN			1.52m													
HEIGHT			610mm			914mm			1.22m				1.62m			
STRENGTH CLASSIFICATION			A	B	C	A	B	C	A	B	C	D	A	B	C	D
MAX FILL OVER TOP			1.83m	11.0m	11.0m	1.83m	7.3m	11.0m	1.83m	7.0m	10.4m	14m	1.83m	7.0m	10.4m	14m
Conc.	Top Slab	T_1	171	197	235	171	197	235	171	197	235	260	171	197	235	260
Conc.	Bottom Slab	T_2	165	222	260	165	222	260	165	222	260	286	165	222	260	286
Conc.	Sidewalls	T_3	152	152	152	152	152	152	152	152	152	152	152	152	152	152
Reinforcing Steel	"a"	Size Bar #	16	13	13	16	13	13	16	13	13	13	16	13	13	13
		Spacing	254	216	254	254	216	254	254	216	254	229	254	216	267	229
		Length	3.73m	3.71m	3.71m	3.73m	3.71m	3.71m	3.73m	3.71m	3.71m	3.71m	3.73m	3.71m	3.71m	3.71m
	"b" or "b_1"	Size Bar #	16	16	19	16	16	19	16	16	19	19	16	16	19	19
		Spacing	254	216	254	254	216	254	254	216	254	229	254	216	267	229
		Length "b"	3.48m	3.51m	3.53m	3.48m	3.51m	3.53m	3.48m	3.51m	3.53m	3.54m	3.48m	3.51m	3.53m	3.54m
		Length "b_1"	3.45m	3.51m	3.53m	3.45m	3.51m	3.53m	3.45m	3.51m	3.53m	3.54m	3.45m	3.51m	3.53m	3.54m
	"c"	Size Bar #	13	16	19	13	16	19	13	16	19	19	13	16	19	19
		Spacing	254	216	254	254	216	254	254	216	254	229	254	216	267	229
		Length	1.68m	1.68m	1.68m	1.68m	1.68m	1.68m	1.68m	1.68m	1.68m	1.68m	1.68m	1.68m	1.68m	1.68m
	"d" Dist Bars	Top Slab-Tot. No.	12	6	6	12	6	6	12	6	6	6	12	6	6	6
		Bottom Slab-Tot. No.	6	6	6	6	6	6	6	6	6	6	6	6	6	6
	"e" Bars	Size Bar #	13	13	13	13	13	13	13	13	13	16	13	13	16	19
		Spacing	457	457	457	457	457	406	457	305	254	267	457	216	229	229
	Spacers	Number	23			26			29				32			
Quan.	Concrete: C.Y. per lin. ft.		0.44	0.53	0.61	0.48	0.57	0.66	0.53	0.61	0.68	0.75	0.57	0.66	0.74	0.80
	Reinf :lbs per lin. ft.		45	45	49	47	47	51	48	49	54	60	49	53	57	67

NOTE:

For boxes of height less than that shown in table, use next greater table height slabs, wall dimensions and reinforcing steel, and make necessary changes in bar lengths, number of spacers and quantities. Number of "d" bars in table is slab total for both cells.

Revision	By	Approved	Date
ORIGINAL		Kercheval	12/75
Add Metric		T. Stanton	03/03
Reviewed		T. Stanton	04/06

SAN DIEGO REGIONAL STANDARD DRAWING

DOUBLE BOX CULVERT
DETAILS No. 1

RECOMMENDED BY THE SAN DIEGO REGIONAL STANDARDS COMMITTEE

Chairperson R.C.E. 19246 Date 3/01/2003

DRAWING NUMBER D-77C

IMPERIAL TABLE – SPAN 5' (all measuements in feet and/or inches unless otherwise noted).

For Metric Table (1.52m Span) – see drawing D77C

SPAN			5'													
HEIGHT			2'			3'			4'				5'			
STRENGTH CLASSIFICATION			A	B	C	A	B	C	A	B	C	D	A	B	C	D
MAX FILL OVER TOP			6	36	36	6	24	36	6	23	34	46	6	23	34	46
Conc.	Top Slab	T_1	6 3/4	7 3/4	9 1/4	6 3/4	7 3/4	9 1/4	6 3/4	7 3/4	9 1/4	10 1/4	6 3/4	7 3/4	9 1/4	10 1/4
Conc.	Bottom Slab	T_2	6 1/2	8 3/4	10 1/4	6 1/2	8 3/4	10 1/4	6 1/2	8 3/4	10 1/4	11 1/4	6 1/2	8 3/4	10 1/4	11 1/4
Conc.	Sidewalls	T_3	6	6	6	6	6	6	6	6	6	6	6	6	6	6
Reinforcing Steel	"a"	Size Bar #	5	4	4	5	4	4	5	4	4	4	5	4	4	4
		Spacing	10	8 1/2	10	10	8 1/2	10	10	8 1/2	10	9	10	8 1/2	10 1/2	9
		Length	12-3	12-2	12-2	12-3	12-2	12-2	12-3	12-2	12-2	12-2	12-3	12-2	12-2	12-2
	"b" or "b_1"	Size Bar #	5	5	6	5	5	6	5	5	6	6	5	5	6	6
		Spacing	10	8 1/2	10	10	8 1/2	10	10	8 1/2	10	9	10	8 1/2	10 1/2	9
		Length "b"	11-5	11-6	11-7	11-5	11-6	11-7	11-5	11-6	11-7	11-8	11-5	11-6	11-7	11-8
		Length "b_1"	11-4	11-6	11-7	11-4	11-6	11-7	11-4	11-6	11-7	11-8	11-4	11-6	11-7	11-8
	"c"	Size Bar #	4	5	6	4	5	6	4	5	6	6	4	5	6	6
		Spacing	10	8 1/2	10	10	8 1/2	10	10	8 1/2	10	9	10	8 1/2	10 1/2	9
		Length	5-6	5-6	5-6	5-6	5-6	5-6	5-6	5-6	5-6	5-6	5-6	5-6	5-6	5-6
	"d" Dist Bars	Top Slab-Tot. No.	12	6	6	12	6	6	12	6	6	6	12	6	6	6
		Bottom Slab-Tot. No.	6	6	6	6	6	6	6	6	6	6	6	6	6	6
	"e" Bars	Size Bar #	4	4	4	4	4	4	4	4	4	5	4	4	5	6
		Spacing	18	18	18	18	18	16	18	12	10	10 1/2	18	8 1/2	9	9
	Spacers	Number	23			26			29				32			
Quan.	Concrete: C.Y. per lin. ft.		0.58	0.69	0.80	0.63	0.75	0.86	0.69	0.80	0.89	0.98	0.74	0.86	0.97	1.04
Quan.	Reinf :lbs per lin. ft.		99	100	109	103	104	112	106	109	119	133	109	116	126	148

NOTE:

For boxes of height less than that shown in table, use next greater table height slabs, wall dimensions and reinforcing steel, and make necessary changes in bar lengths, number of spacers and quantities. Number of "d" bars in table is slab total for both cells.

Revision	By	Approved	Date
ORIGINAL		Kercheval	12/75
Add Metric		T. Stanton	03/03
Reviewed		T. Stanton	04/06

SAN DIEGO REGIONAL STANDARD DRAWING

DOUBLE BOX CULVERT
DETAILS No. 1

RECOMMENDED BY THE SAN DIEGO REGIONAL STANDARDS COMMITTEE

Chairperson R.C.E. 19246 Date 3/01/2003

DRAWING NUMBER D-77D

METRIC TABLE - SPAN 1.83m (all measuements in millimeters unless otherwise noted).
For Imperial table (6' Span) - see drawing D77F

SPAN			1.83m													
HEIGHT			914mm			1.22m			1.52m				1.83m			
STRENGTH CLASSIFICATION			A	B	C	A	B	C	A	B	C	D	A	B	C	D
MAX FILL OVER TOP			1.22m	6.1m	10.4m	1.22m	6.1m	10.4m	1.22m	5.79m	10m	13.1m	1.22m	5.8m	10m	13.1m
Conc.	Top Slab	T_1	184	210	267	184	210	267	184	210	267	305	184	210	267	305
Conc.	Bottom Slab	T_2	184	241	292	184	241	292	184	241	292	324	184	241	292	324
Conc.	Sidewalls	T_3	152	152	152	152	152	152	152	152	152	152	152	152	152	191
Reinforcing Steel	"a"	Size Bar #	16	13	13	16	13	13	16	13	13	13	16	13	13	13
		Spacing	241	279	216	241	279	216	241	279	216	267	241	279	216	267
		Length	4.34m	4.32m	4.32m	4.34m	4.32m	4.32m	4.34m	4.32m	4.32m	4.32m	4.34m	4.32m	4.32m	4.47m
	"b" or "b_1"	Size Bar #	16	19	19	16	19	19	16	19	19	22	16	19	19	22
		Spacing	241	279	216	241	279	216	241	279	216	267	241	279	216	267
		Length "b"	4.11m	4.11m	4.17m	4.11m	4.11m	4.17m	4.11m	4.11m	4.17m	4.19m	4.11m	4.11m	4.17m	4.32m
		Length "b_1"	4.09m	4.14m	4.17m	4.09m	4.14m	4.17m	4.09m	4.11m	4.17m	4.19m	4.11m	4.11m	4.17m	4.32m
	"c"	Size Bar #	13	19	19	13	19	19	13	19	19	22	13	19	19	22
		Spacing	241	279	216	241	279	216	241	279	216	267	241	279	216	267
		Length	1.98m	1.98m	1.98m	1.98m	1.98m	1.98m	1.98m	1.98m	1.98m	1.98m	1.98m	1.98m	1.98m	2.03m
	"d" Dist Bars	Top Slab-Tot. No.	12	6	6	12	6	6	12	6	6	6	12	6	6	6
		Bottom Slab-Tot. No.	6	6	6	6	6	6	6	6	6	6	6	6	6	6
	"e" Bars	Size Bar #	13	13	13	13	13	13	13	13	16	16	13	16	19	19
		Spacing	457	457	406	457	356	216	457	254	241	178	457	279	229	152
	Spacers	Number	30			33			36				36			
Quan.	Concrete: cu m per lin. ft.		0.59	0.69	0.83	0..63	0.73	0.86	.67	.77	.91	.99	0.71	.82	.96	1.12
Quan.	Reinf: kgs per lin. ft.		55	54	67	57	56	70	58	59	74	79	59	62	80	91

NOTE:

For boxes of height less than that shown in table, use next greater table height slabs, wall dimensions and reinforcing steel, and make necessary changes in bar lengths, number of spacers and quantities. Number of "d" bars in table is slab total for both cells.

Revision	By	Approved	Date
ORIGINAL		Kercheval	12/75
Add Metric		T. Stanton	03/03
Reviewed		T. Stanton	04/06

SAN DIEGO REGIONAL STANDARD DRAWING

DOUBLE BOX CULVERT
DETAILS No. 1

RECOMMENDED BY THE SAN DIEGO REGIONAL STANDARDS COMMITTEE

Chairperson R.C.E. 19246 Date 3/01/2003

DRAWING NUMBER D-77E

IMPERIAL TABLE - SPAN 6' (all measuements in feet and/or inches unless otherwise noted).
For Metric Table (1.83m Span) - see drawing D77E

SPAN			6'													
HEIGHT			3'			4'			5'				6'			
STRENGTH CLASSIFICATION			A	B	C	A	B	C	A	B	C	D	A	B	C	D
MAX FILL OVER TOP			4	20	34	4	20	34	4	19	33	43	4	19	33	43
Conc.	Top Slab	T_1	7 1/4	8 1/4	10 1/2	7 1/4	8 1/4	10 1/2	7 1/4	8 1/4	10 1/2	12	7 1/4	8 1/4	10 1/2	12
Conc.	Bottom Slab	T_2	7 1/4	9 1/2	11 1/2	7 1/4	9 1/2	11 1/2	7 1/4	9 1/2	11 1/2	12 3/4	7 1/4	9 1/2	11 1/2	12 3/4
Conc.	Sidewalls	T_3	6	6	6	6	6	6	6	6	6	6	6	6	6	7 1/2
Reinforcing Steel	"a"	Size Bar #	5	4	4	5	4	4	5	4	4	4	5	4	4	4
		Spacing	9 1/2	11	8 1/2	9 1/2	11	8 1/2	9 1/2	11	8 1/2	10 1/2	9 1/2	11	8 1/2	10 1/2
		Length	14-3	14-2	14-2	14-3	14-2	14-2	14-3	14-2	14-2	14-2	14-3	14-2	14-2	14-8
	"b" or "b_1"	Size Bar #	5	6	6	5	6	6	5	6	6	7	5	6	6	7
		Spacing	9 1/2	11	8 1/2	9 1/2	11	8 1/2	9 1/2	11	8 1/2	10 1/2	9 1/2	11	8 1/2	10 1/2
		Length "b"	13-6	13-6	13-8	13-6	13-6	13-8	13-6	13-6	13-8	13-9	13-6	13-6	13-8	14-2
		Length "b_1"	13-5	13-7	13-8	13-5	13-7	13-8	13-5	13-6	13-8	13-9	13-6	13-6	13-8	14-2
	"c"	Size Bar #	4	6	6	4	6	6	4	6	6	7	4	6	6	7
		Spacing	9 1/2	11	8 1/2	9 1/2	11	8 1/2	9 1/2	11	8 1/2	10 1/2	9 1/2	11	8 1/2	10 1/2
		Length	6-6	6-6	6-6	6-6	6-6	6-6	6-6	6-6	6-6	6-6	6-6	6-6	6-6	6-8
	"d" Dist Bars	Top Slab-Tot. No.	12	6	6	12	6	6	12	6	6	6	12	6	6	6
		Bottom Slab-Tot. No.	6	6	6	6	6	6	6	6	6	6	6	6	6	6
	"e" Bars	Size Bar #	4	4	4	4	4	4	4	4	5	5	4	5	6	6
		Spacing	18	18	16	18	14	8 1/2	18	10	9 1/2	7	18	11	9	6
	Spacers	Number	30			33			36				36			
Quan.	Concrete: C.Y. per lin. ft.		0.77	0.90	1.08	0.82	0.96	1.13	0.88	1.01	1.19	1.30	0.93	1.07	1.25	1.47
Quan.	Reinf :lbs per lin. ft.		121	119	147	125	124	155	128	131	164	175	129	137	177	201

NOTE:

For boxes of height less than that shown in table, use next greater table height slabs, wall dimensions and reinforcing steel, and make necessary changes in bar lengths, number of spacers and quantities. Number of "d" bars in table is slab total for both cells.

Revision	By	Approved	Date
ORIGINAL		Kercheval	12/75
Add Metric		T. Stanton	03/03
Reviewed		T. Stanton	04/06

SAN DIEGO REGIONAL STANDARD DRAWING

DOUBLE BOX CULVERT
DETAILS No. 1

RECOMMENDED BY THE SAN DIEGO REGIONAL STANDARDS COMMITTEE

Chairperson R.C.E. 19246 Date 3/01/2003

DRAWING NUMBER D-77F

METRIC TABLE - SPAN 2.44m (all measuements in millimeters unless otherwise noted).

For Imperial table (8' Span) - see drawing D77H

SPAN			2.44m																
HEIGHT			1.22m			1.52m			1.83m			2.13m				2.44m			
STRENGTH CLASSIFICATION			A	B	C	A	B	C	A	B	C	A	B	C	D	A	B	C	D
MAX FILL OVER TOP			914mm	4.27m	7.62m	914mm	4.27m	7.62m	914mm	4.27m	7.62m	914mm	4.27m	7.62m	11.3m	914mm	4.27m	7.62m	11.3m
Conc.	Top Slab	T	216	241	305	216	241	305	216	241	305	216	241	311	362	216	241	311	362
Conc.	Bottom Slab	T_2	191	267	324	191	267	324	191	267	324	191	273	13	15	191	273	13	15
Conc.	Sidewalls	T_3	152	152	152	152	152	152	152	152	152	178	178	178	203	178	178	203	216
Reinforcing Steel	"a"	Size Bar #	19	13	13	19	13	13	19	13	13	19	13	13	13	19	13	13	13
		Spacing	305	241	267	305	241	254	305	241	254	292	241	254	216	292	241	254	216
		Length	5.59m	5.54m	5.54m	5.59m	5.54m	5.54m	5.59m	5.54m	5.54m	5.66m	5.61m	5.61m	5.69m	5.66m	5.61m	5.69m	5.74m
	"b" or "b_1"	Size Bar #	19	19	22	19	19	22	19	19	22	19	19	22	22	19	19	22	22
		Spacing	305	241	267	305	241	254	305	241	254	292	241	254	216	292	241	254	216
		Length "b"	5.36m	5.38m	5.41m	5.36m	5.38m	5.41m	5.36m	5.38m	5.41m	5.44m	5.44m	5.49m	5.61m	5.44m	5.44m	5.56m	5.64m
		Length "b_1"	5.31m	5.38m	5.41m	5.31m	5.38m	5.41m	5.31m	5.38m	5.41m	5.44m	5.44m	5.49m	5.61m	5.38m	5.46m	5.49m	5.66m
	"c"	Size Bar #	13	19	22	13	19	22	13	19	22	13	19	22	22	13	19	22	22
		Spacing	305	241	267	305	241	254	305	241	254	292	241	254	216	292	241	254	216
		Length	2.59m	2.59m	2.59m	2.59m	2.59m	2.59m	2.59m	2.59m	2.59m	2.62m	2.62m	2.62m	2.64m	2.62m	2.62m	2.64m	2.67m
	"d" Dist Bars	Top Slab-Tot. No.	16	8	8	16	8	8	16	8	8	16	8	8	8	16	8	8	8
		Bottom Slab-Tot. No.	8	8	8	8	8	8	8	8	8	8	8	8	8	8	8	8	8
	"e" Bars	Size Bar #	13	13	16	13	13	16	13	16	19	13	16	19	22	13	16	22	22
		Spacing	457	457	267	457	305	254	457	292	254	356	241	191	216	292	216	191	229
	Spacers	Number	41			44			44			47			56	50		60	
Quan.	Concrete: cu m per lin. ft.		.83	.99	1.19	0.87	1.05	1.23	0.91	1.09	1.27	1.00	1.19	1.40	1.64	1.06	1.24	1.52	1.73
Quan.	Reinf: kg per lin. ft.		77	79	91	78	82	99	79	85	104	84	90	113	136	87	94	129	142

NOTE:

For boxes of height less than that shown in table, use next greater table height slabs, wall dimensions and reinforcing steel, and make necessary changes in bar lengths, number of spacers and quantities. Number of "d" bars in table is slab total for both cells.

Revision	By	Approved	Date
ORIGINAL		Kercheval	12/75
Add Metric		T. Stanton	03/03
Reviewed		T. Stanton	04/06

SAN DIEGO REGIONAL STANDARD DRAWING

DOUBLE BOX CULVERT
DETAILS No. 1

RECOMMENDED BY THE SAN DIEGO REGIONAL STANDARDS COMMITTEE

Chairperson R.C.E. 19246 Date 3/10/2003

DRAWING NUMBER D-77G

IMPERIAL TABLE - SPAN 8' (all measuements in feet and/or inches unless otherwise noted).

For Metric Table (2.44m Span) - see drawing D77G

SPAN			8'																
HEIGHT			4'			5'			6'			7'				8'			
STRENGTH CLASSIFICATION			A	B	C	A	B	C	A	B	C	A	B	C	D	A	B	C	D
MAX FILL OVER TOP			3	14	25	3	14	25	3	14	25	3	14	25	37	3	14	25	37
Conc.	Top Slab	T_1	8 1/2	9 1/2	12	8 1/2	9 1/2	12	8 1/2	9 1/2	12	8 1/2	9 1/2	12 1/4	14 1/4	8 1/2	9 1/2	12 1/4	14 1/4
Conc.	Bottom Slab	T_2	7 1/2	10 1/2	12 3/4	7 1/2	10 1/2	12 3/4	7 1/2	10 1/2	12 3/4	7 1/2	10 3/4	13	15	7 1/2	10 3/4	13	15
Conc.	Sidewalls	T_3	6	6	6	6	6	6	6	6	6	7	7	7	8	7	7	8	8 1/2
Reinforcing Steel	"a"	Size Bar #	6	4	4	6	4	4	6	4	4	6	4	4	4	6	4	4	4
		Spacing	12	9 1/2	10 1/2	12	9 1/2	10	12	9 1/2	10	11 1/2	9 1/2	10	8 1/2	11 1/2	9 1/2	10	8 1/2
		Length	18-4	18-2	18-2	18-4	18-2	18-2	18-4	18-2	18-2	18-7	18-5	18-5	18-8	18-7	18-5	18-8	18-10
	"b" or "b_1"	Size Bar #	6	6	7	6	6	7	6	6	7	6	6	7	7	6	6	7	7
		Spacing	12	9 1/2	10 1/2	12	9 1/2	10	12	9 1/2	10	11 1/2	9 1/2	10	8 1/2	11 1/2	9 1/2	10	8 1/2
		Length "b"	17-7	17-8	17-9	17-7	17-8	17-9	17-7	17-8	17-9	17-10	17-10	18-0	18-5	17-10	17-10	18-3	18-6
		Length "b_1"	17-5	17-8	17-9	17-5	17-8	17-9	17-5	17-8	17-9	17-10	17-10	18-0	18-5	17-8	17-11	18-0	18-7
	"c"	Size Bar #	4	6	7	4	6	7	4	6	7	4	6	7	7	4	6	7	7
		Spacing	12	9 1/2	10 1/2	12	9 1/2	10	12	9 1/2	10	11 1/2	9 1/2	10	8 1/2	11 1/2	9 1/2	10	8 1/2
		Length	8-6	8-6	8-6	8-6	8-6	8-6	8-6	8-6	8-6	8-7	8-7	8-7	8-8	8-7	8-7	8-8	8-9
	"d" Dist Bars	Top Slab-Tot. No.	16	8	8	16	8	8	16	8	8	16	8	8	8	16	8	8	8
		Bottom Slab-Tot. No.	8	8	8	8	8	8	8	8	8	8	8	8	8	8	8	8	8
	"e" Bars	Size Bar #	4	4	5	4	4	5	4	5	6	4	5	6	7	4	5	7	7
		Spacing	18	18	10 1/2	18	12	10	18	11 1/2	10	14	9 1/2	7 1/2	8 1/2	11 1/2	8 1/2	7 1/2	9
	Spacers	Number	41			44			44			47			56	50		60	
Quan.	Concrete: C.Y. per lin. ft.		1.08	1.30	1.55	1.14	1.37	1.61	1.19	1.42	1.66	1.32	1.56	1.83	2.14	1.39	1.62	1.99	2.27
Quan.	Reinf :lbs per lin. ft.		169	175	200	172	181	218	173	188	229	185	199	248	299	191	207	284	314

NOTE:

For boxes of height less than that shown in table, use next greater table height slabs, wall dimensions and reinforcing steel, and make necessary changes in bar lengths, number of spacers and quantities. Number of "d" bars in table is slab total for both cells.

Revision	By	Approved	Date
ORIGINAL		Kercheval	12/75
Add Metric		T. Stanton	03/03
Reviewed	T. Stanton		04/06

SAN DIEGO REGIONAL STANDARD DRAWING

DOUBLE BOX CULVERT

DETAILS No. 1

RECOMMENDED BY THE SAN DIEGO REGIONAL STANDARDS COMMITTEE

Chairperson R.C.E. 19246 Date 3/10/2003

DRAWING NUMBER D-77H

METRIC TABLE – SPAN 3.05m (all measuements in millimeters unless otherwise noted).

For Imperial table (10' Span) – see drawing D77J

SPAN			3.05m																
HEIGHT			1.52m			1.83m			2.13m			2.44m				3.05m			
STRENGTH CLASSIFICATION			A	B	C	A	B	C	A	B	C	A	B	C	D	A	B	C	D
MAX FILL OVER TOP			610mm	5.18m	9.14m	610mm	5.18m	9.14m	610mm	5.18m	9.14m	610mm	4.88m	8.84m	11m	610mm	4.88m	8.84m	11m
Conc.	Top Slab	T	222	324	406	222	324	406	222	324	406	222	324	406	438	222	324	406	445
Conc.	Bottom Slab	T_2	210	343	419	210	343	419	210	349	425	222	343	419	464	222	343	419	470
Conc.	Sidewalls	T_3	152	152	152	152	152	152	152	165	179	179	179	191	191	203	203	229	254
Reinforcing Steel	"a"	Size Bar #	19	13	13	19	13	13	19	13	13	19	13	13	13	19	13	13	13
Reinforcing Steel	"a"	Spacing	279	254	254	279	241	254	279	241	254	279	254	254	229	279	254	254	229
Reinforcing Steel	"a"	Length	6.81m	6.76m	6.76m	6.81m	6.76m	6.76m	6.81m	6.81m	6.83m	6.88m	6.83m	6.88m	6.96m	6.96m	6.91m	6.99m	7.06m
Reinforcing Steel	"b"	Size Bar #	19	22	25	19	22	25	19	22	25	19	22	25	25	19	22	25	25
Reinforcing Steel	"b"	Spacing	279	254	254	279	241	254	279	241	254	279	254	254	229	279	254	254	229
Reinforcing Steel	"b" or "b_1"	Length "b"	6.58m	6.65m	6.71m	6.58m	6.65m	6.71m	6.58m	6.68m	6.78m	6.65m	6.73m	6.81m	6.93m	6.73m	6.81m	6.93m	7.04m
Reinforcing Steel	"b" or "b_1"	Length "b_1"	6.53m	6.65m	6.71m	6.53m	6.65m	6.71m	6.53m	6.68m	6.78m	6.63m	6.71m	6.81m	6.93m	6.71m	6.78m	6.91m	7.06m
Reinforcing Steel	"c"	Size Bar #	19	22	25	19	22	25	19	22	25	19	22	25	25	19	22	25	25
Reinforcing Steel	"c"	Spacing	279	254	254	279	241	254	279	241	254	279	254	254	229	279	254	254	229
Reinforcing Steel	"c"	Length	3.20m	3.20m	3.20m	3.20m	3.20m	3.20m	3.20m	3.23m	3.23m	3.23m	3.23m	3.25m	3.28m	3.25m	3.25m	3.28m	3.30m
Reinforcing Steel	"d" Dist Bars	Top Slab–Tot. No.	10	10	10	10	10	10	18	10	10	18	10	10	10	18	10	10	10
Reinforcing Steel	"d" Dist Bars	Bottom Slab–Tot. No.	10	10	10	10	10	10	10	10	10	10	10	10	10	10	10	10	10
Reinforcing Steel	"e" Bars	Size Bar #	13	13	16	13	13	16	13	13	19	13	16	19	22	13	19	19	22
Reinforcing Steel	"e" Bars	Spacing	457	254	254	457	152	165	356	152	203	279	216	152	152	191	178	140	127
Reinforcing Steel	Spacers	Number	48			48			51			54			64	68			
Quan.	Concrete: cu m per lin. ft.		1.07	1.57	1.88	1.10	1.58	1.90	1.15	1.67	2.02	1.28	1.74	2.09	2.32	1.47	1.92	2.33	2.61
Quan.	Reinf: kg per lin. ft.		107	115	141	108	124	147	110	127	154	114	126	161	195	127	148	181	216

NOTE:

For boxes of height less than that shown in table, use next greater table height slabs, wall dimensions and reinforcing steel, and make necessary changes in bar lengths, number of spacers and quantities. Number of "d" bars in table is slab total for both cells.

Revision	By	Approved	Date
ORIGINAL		Kercheval	12/75
Add Metric		T. Stanton	03/03
Reviewed		T. Stanton	04/06

SAN DIEGO REGIONAL STANDARD DRAWING

DOUBLE BOX CULVERT
DETAILS No. 1

RECOMMENDED BY THE SAN DIEGO REGIONAL STANDARDS COMMITTEE

Chairperson R.C.E. 19246 Date 3/10/2003

DRAWING NUMBER D-771

IMPERIAL TABLE - SPAN 10' (all measuements in feet and/or inches unless otherwise noted).
For Metric Table (3.05m Span) - see drawing D771

SPAN			10'																
HEIGHT			5'			6'			7'			8'				10'			
STRENGTH CLASSIFICATION			A	B	C	A	B	C	A	B	C	A	B	C	D	A	B	C	D
MAX FILL OVER TOP			2	17	30	2	17	30	2	17	30	2	16	29	36	2	16	29	36
Conc.	Top Slab	T_1	8 3/4	12 3/4	16	8 3/4	12 3/4	16	8 3/4	12 3/4	16	8 3/4	12 3/4	16	17 1/4	8 3/4	12 3/4	16	17 1/2
Conc.	Bottom Slab	T_2	8 1/4	13 1/2	16 1/2	8 1/4	13 1/2	16 1/2	8 1/4	13 3/4	16 3/4	8 3/4	13 1/2	16 1/2	18 1/4	8 3/4	13 1/2	16 1/2	18 1/2
Conc.	Sidewalls	T_3	6	6	6	6	6	6	6	6 1/2	7	7	7	7 1/2	7 1/2	8	8	9	10
Reinforcing Steel	"a"	Size Bar #	6	4	4	6	4	4	6	4	4	6	4	4	4	6	4	4	4
Reinforcing Steel	"a"	Spacing	11	10	10	11	9 1/2	10	11	9 1/2	10	11	10	10	9	11	10	10	9
Reinforcing Steel	"a"	Length	22-4	22-2	22-2	22-4	22-2	22-2	22-4	22-4	22-5	22-7	22-5	22-7	22-10	22-10	22-8	22-11	23-2
Reinforcing Steel	"b" or "b_1"	Size Bar #	6	7	8	6	7	8	6	7	8	6	7	8	8	6	7	8	8
Reinforcing Steel	"b" or "b_1"	Spacing	11	10	10	11	9 1/2	10	11	9 1/2	10	11	10	10	9	11	10	10	9
Reinforcing Steel	"b" or "b_1"	Length "b"	21-7	21-10	22-0	21-7	21-10	22-0	21-7	21-11	22-3	21-10	22-1	22-4	22-9	22-1	22-4	22-9	23-1
Reinforcing Steel	"b" or "b_1"	Length "b_1"	21-5	21-10	22-0	21-5	21-10	22-0	21-5	21-11	22-3	21-9	22-0	22-4	22-9	22-0	22-3	22-8	23-2
Reinforcing Steel	"c"	Size Bar #	6	7	8	6	7	8	6	7	8	6	7	8	8	6	7	8	8
Reinforcing Steel	"c"	Spacing	11	10	10	11	9 1/2	10	11	9 1/2	10	11	10	10	9	11	10	10	9
Reinforcing Steel	"c"	Length	10-6	10-6	10-6	10-6	10-6	10-6	10-6	10-7	10-7	10-7	10-7	10-8	10-9	10-8	10-8	10-9	10-10
Reinforcing Steel	"d" Dist Bars	Top Slab-Tot. No.	18	10	10	18	10	10	18	10	10	18	10	10	10	18	10	10	10
Reinforcing Steel	"d" Dist Bars	Bottom Slab-Tot. No.	10	10	10	10	10	10	10	10	10	10	10	10	10	10	10	10	10
Reinforcing Steel	"e" Bars	Size Bar #	4	4	5	4	4	5	4	4	6	4	5	6	7	4	6	6	7
Reinforcing Steel	"e" Bars	Spacing	18	10	10	18	6	6 1/2	14	6	8	11	8 1/2	6	6	7 1/2	7	5 1/2	5
Reinforcing Steel	Spacers	Number	48			48			51			54			64	68			
Quan.	Concrete: C.Y. per lin. ft.		1.40	2.05	2.46	1.45	2.07	2.48	1.51	2.18	2.64	1.68	2.27	2.74	3.04	1.92	2.51	3.05	3.41
Quan.	Reinf :lbs per lin. ft.		236	254	310	238	274	324	243	280	339	252	278	355	430	279	327	400	476

NOTE:
For boxes of height less than that shown in table, use next greater table height slabs, wall dimensions and reinforcing steel, and make necessary changes in bar lengths, number of spacers and quantities. Number of "d" bars in table is slab total for both cells.

Revision	By	Approved	Date
ORIGINAL		Kerchevol	12/75
Add Metric	T. Stanton		03/03
Reviewed	T. Stanton		03/03

SAN DIEGO REGIONAL STANDARD DRAWING

DOUBLE BOX CULVERT
DETAILS No. 1

RECOMMENDED BY THE SAN DIEGO REGIONAL STANDARDS COMMITTEE

Chairperson R.C.E. 19246 Date 3/01/2003

DRAWING NUMBER D-77J

Revision	By	Approved	Date
ORIGINAL		Kercheval	12/75
Add Metric	T. Stanton	T. Stanton	03/03
Reviewed	T. Stanton	T. Stanton	04/06

SAN DIEGO REGIONAL STANDARD DRAWING

DOUBLE BOX CULVERT
DETAILS No. 1

RECOMMENDED BY THE SAN DIEGO REGIONAL STANDARDS COMMITTEE

Chairperson R.C.E. 19246 Date 3/10/2003

DRAWING NUMBER D-77K

METRIC TABLES – SPAN 3.66m (all Measurements in millimeters unless otherwise noted).
For Imperial Table (12' Span) – See Drawing D-77L

SPAN			3.66m																					
HEIGHT			1.83m			2.13m			2.44m			2.74m				3.05m				3.66m			
STRENGTH CLASSIFICATION			A	B	C	A	B	C	A	B	C	A	B	C	D	A	B	C	D	A	B	C	D
MAX FILL OVER TOP			610mm	4.27m	7.9m	610mm	4.27m	7.9m	610mm	4.27m	7.9m	610mm	4.27m	7.9m	11m	610mm	4.27m	7.9m	11m	610mm	4.27m	7.9m	11m
Conc.	Top Slab	T_1	254	356	445	254	362	445	260	362	451	260	368	451	527	260	368	451	527	260	368	464	540
Conc.	Bottom Slab	T_2	235	375	457	235	381	464	248	381	470	254	387	476	540	260	387	476	546	267	387	489	559
Conc.	Sidewalls	T_3	152	152	165	178	178	178	203	203	216	229	229	229	254	229	229	241	279	229	254	279	305
Reinforcing Steel	"a"	Size Bar #	19	13	13	19	13	13	19	13	13	19	13	13	13	19	13	13	13	19	13	13	13
		Spacing	229	292	229	229	292	229	229	279	216	229	279	216	229	229	279	216	229	229	279	216	229
		Length	8.03m	7.98m	8.03m	8.10m	8.05m	8.05m	8.18m	8.13m	8.18m	8.26m	8.20	8.20	8.26m	8.26m	8.20	8.31m	8.36m	8.26m	8.28m	8.36m	8.43m
	"b" or "b_1"	Size Bar #	19	25	25	19	25	25	19	25	25	19	25	25	29	19	25	25	29	19	25	25	29
		Spacing	229	292	229	229	292	229	229	279	216	229	279	216	229	229	279	216	229	229	279	216	229
		Length "b"	7.82m	7.87m	8.00m	7.90m	7.95m	8.03m	7.98m	8.03m	8.15m	8.05m	8.13m	8.18m	8.33m	8.05m	8.13m	8.28m	8.38m	8.05m	8.20	8.36m	8.48m
		Length "b_1"	7.77m	7.87m	8.00m	7.85m	7.98m	8.03m	7.95m	8.05m	8.15m	8.03m	8.13m	8.20	8.33m	8.03m	8.13m	8.28m	8.41m	8.03m	8.20	8.36m	8.51m
	"c"	Size Bar #	16	25	25	16	25	25	16	25	25	16	25	25	29	16	25	25	29	16	25	25	29
		Spacing	229	292	229	229	292	229	229	279	216	229	279	216	229	229	279	216	229	229	279	216	229
		Length	3.81m	3.81m	3.84m	3.84m	3.84m	3.84m	3.86m	3.86m	3.89m	3.89m	3.89m	3.89m	3.91m	3.89m	3.89m	3.91m	3.94m	3.89m	3.91m	3.94m	3.96m
	"d" Dist Bars	Top Slab-Tot. No.	24	10	10	24	10	10	24	10	10	24	10	10	10	24	10	10	10	24	10	10	10
		Bottom Slab-Tot. No.	10	10	10	10	10	10	10	10	10	10	10	10	10	10	10	10	10	10	10	10	10
	"e" Bars	Size Bar #	13	13	16	13	13	16	13	13	16	13	16	22	25	13	22	25	25	19	22	25	29
		Spacing	457	203	203	381	152	165	305	140	152	229	191	216	203	216	11	216	229	305	203	178	178
	Spacers	Number	52			55			68			68				72				76			
Quan.	Concrete: cu m per lin. ft.		1.41	1.98	2.42	1.51	2.12	2.51	1.67	2.24	2.74	1.82	.57	2.82	3.25	1.90	2.47	2.95	3.43	2.04	2.70	3.29	3.76
Quan.	Reinf: kg per lin. ft.		140	144	182	142	150	188	152	165	209	156	170	211	262	159	179	235	264	168	194	257	305

NOTE:

For boxes of height less than that shown in table, use next greater table height slabs, wall dimensions and reinforcing steel, and make necessary changes in bar lengths, number of spacers and quantities. Number of "d" bars in table is slab total for both cells.

Revision	By	Approved	Date
ORIGINAL		Kercheval	12/75
Add Metric		T. Stanton	03/03
Reviewed		T. Stanton	04/06

SAN DIEGO REGIONAL STANDARD DRAWING

DOUBLE BOX CULVERT
DETAILS No. 1

RECOMMENDED BY THE SAN DIEGO REGIONAL STANDARDS COMMITTEE

Chairperson R.C.E. 19246 Date 3/01/2003

DRAWING NUMBER **D-77L**

IMPERIAL TABLE – SPAN 12' (all measuements in feet and/or inches unless otherwise noted).

For Metric Table (3.66m Span) – see drawing D77K

SPAN			12'																			
HEIGHT			6'			7'			8'			9'				10'				12'			
STRENGTH CLASSIFICATION			A	B	C	A	B	C	A	B	C	A	B	C	D	A	B	C	D	A	B	C	D
MAX FILL OVER TOP			2	14	26	2	14	26	2	14	26	2	14	26	36	2	14	26	36	2	14	26	36
Conc.	Top Slab	T_1	10	14	17 1/2	10	14 1/4	17 1/2	10 1/4	14 1/4	17 3/4	10 1/4	14 1/2	17 3/4	20 3/4	10 1/4	14 1/2	17 3/4	20 3/4	10 1/4	14 1/2	18 1/4	21 1/4
Conc.	Bottom Slab	T_2	9 1/4	14 3/4	18	9 1/4	15	18 1/4	9 3/4	15	18 1/2	10	15 1/4	18 3/4	21 1/4	10 1/4	15 1/4	18 3/4	21 1/2	10 1/2	15 1/4	19 1/4	22
Conc.	Sidewalls	T_3	6	6	6 1/2	7	7	7	8	8	8 1/2	9	9	9	10	9	9	9 1/2	11	9	10	11	12
Reinforcing Steel	"a"	Size Bar #	6	4	4	6	4	4	6	4	4	6	4	4	4	6	4	4	4	6	4	4	4
		Spacing	9	11 1/2	9	9	11 1/2	9	9	11	8 1/2	9	11	8 1/2	9	9	11	8 1/2	9	9	11	8 1/2	9
		Length	26-4	26-2	26-4	26-7	26-5	26-5	26-10	26-8	26-10	27-1	26-11	26-11	27-1	27-1	26-11	27-3	27-5	27-1	27-2	27-5	27-8
	"b" or "b_1"	Size Bar #	6	8	8	6	8	8	6	8	8	6	8	8	9	6	8	8	9	6	8	8	9
		Spacing	9	11 1/2	9	9	11 1/2	9	9	11	8 1/2	9	11	8 1/2	9	9	11	8 1/2	9	9	11	8 1/2	9
		Length "b"	25-8	25-10	26-3	25-11	26-1	26-4	26-2	26-4	26-9	26-5	26-8	26-10	27-4	26-5	26-8	27-2	27-6	26-5	26-11	27-5	27-10
		Length "b_1"	25-6	25-10	26-3	25-9	26-2	26-4	26-1	26-5	26-9	26-4	26-8	26-11	27-4	26-4	26-8	27-2	27-7	26-4	26-11	27-5	27-11
	"c"	Size Bar #	5	8	8	5	8	8	5	8	8	5	8	8	9	5	8	8	9	5	8	8	9
		Spacing	9	11 1/2	9	9	11 1/2	9	9	11	8 1/2	9	11	8 1/2	9	9	11	8 1/2	9	9	11	8 1/2	9
		Length	12-6	12-6	12-7	12-7	12-7	12-7	12-8	12-8	12-9	12-9	12-9	12-9	12-10	12-9	12-9	12-10	12-11	12-9	12-10	12-11	13-0
	"d" Dist Bars	Top Slab-Tot. No.	24	10	10	24	10	10	24	10	10	24	10	10	10	24	10	10	10	24	10	10	10
		Bottom Slab-Tot. No.	10	10	10	10	10	10	10	10	10	10	10	10	10	10	10	10	10	10	10	10	10
	"e" Bars	Size Bar #	4	4	5	4	4	5	4	4	5	4	5	7	8	4	7	8	8	6	7	8	9
		Spacing	18	8	8	15	6	6 1/2	12	5 1/2	6	9	7 1/2	8 1/2	8	8 1/2	11	8 1/2	9	12	8	7	7
	Spacers	Number	52			55			68			68				72				76			
Quan.	Concrete: C.Y. per lin. ft.		1.84	2.59	3.16	1.97	2.77	3.28	2.19	2.93	3.59	2.38	0.74	3.69	4.25	2.48	3.23	3.86	4.49	2.67	3.53	4.30	4.92
Quan.	Reinf :lbs per lin. ft.		309	317	401	316	330	415	336	363	460	345	374	485	578	351	394	519	582	371	427	567	673

NOTE:

For boxes of height less than that shown in table, use next greater table height slabs, wall dimensions and reinforcing steel, and make necessary changes in bar lengths, number of spacers and quantities. Number of "d" bars in table is slab total for both cells.

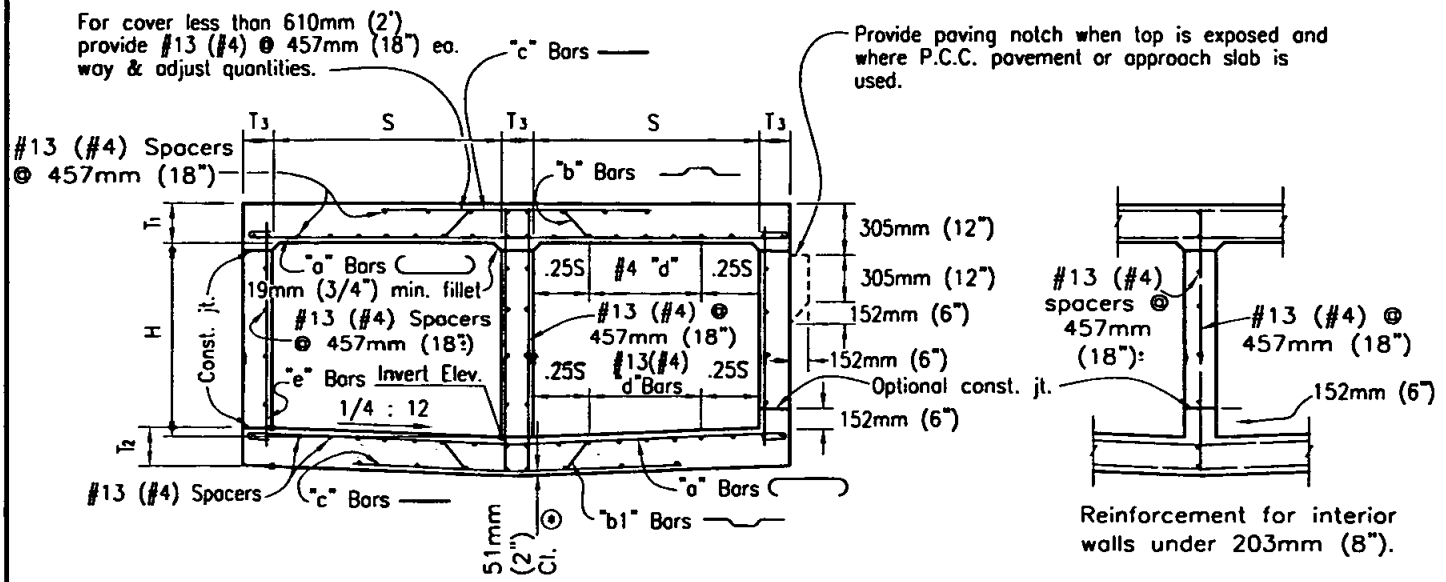

TYPICAL SECTION

(Showing reinforcement for interior walls 203mm (8") and over.)

⊛ For reinforcement clearance, except at bottom, see "Miscellaneous Details."

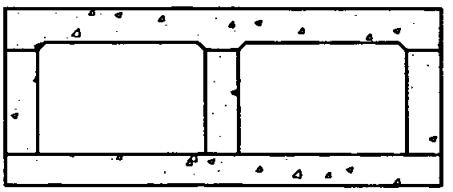

"FLAT INVERT" ALTERNATIVE

(When shown)

Revision	By	Approved	Date
ORIGINAL		Kercheval	12/75
Add Metric		T. Stanton	03/03
Reviewed		T. Stanton	04/06

SAN DIEGO REGIONAL STANDARD DRAWING

DOUBLE BOX CULVERT DETAILS NO. 2

RECOMMENDED BY THE SAN DIEGO REGIONAL STANDARDS COMMITTEE

T. Stanton 3/10/2003

Chairperson R.C.E. 19246 Date

DRAWING NUMBER **D-77M**

METRIC TABLE – SPAN 1.22m (all measuements in millimeters unless otherwise noted).
For Imperial table (4' Span) – see drawing D78B

SPAN			1.22m								
HEIGHT			610mm			914mm			1.22m		
STRENGTH CLASSIFICATION			A	B	C	A	B	C	A	B	C
MAX FILL OVER TOP			3m	7.3m	11.6m	3m	7.3m	11.6m	3m	7.3m	11.6m
Conc.	Top Slab	T_1	159	159	184	159	159	184	159	159	184
Conc.	Bottom Slab	T_2	152	178	210	152	178	210	152	178	210
Conc.	Sidewalls	T_3	152	152	152	152	152	152	152	152	152
Reinforcing Steel	"a"	Size Bar #	16	13	16	16	13	16	16	13	16
		Spacing	279	286	330	279	286	330	279	286	330
		Length	4.50m	4.47m	4.50m	4.50m	4.47m	4.50m	4.50m	4.47m	4.50m
	"b" or "b_1"	Size Bar #	16	16	19	16	16	19	16	16	19
		Spacing	279	286	330	279	286	330	279	286	330
		Length "b"	4.32m	4.32m	4.34m	4.32m	4.32m	4.34m	4.32m	4.32m	4.34m
		Length "b_1"	4.27m	4.32m	4.34m	4.27m	4.32m	4.34m	4.27m	4.32m	4.34m
	"c"	Size Bar #	13	16	19	13	16	19	13	16	19
		Spacing	279	286	330	279	286	330	279	286	330
		Length	2.74m	2.74m	2.74m	2.74m	2.74m	2.74m	2.74m	2.74m	2.74m
	"d" Dist Bars	Top Slab-Tot. No.	15	9	9	15	9	9	15	9	9
		Bottom Slab-Tot. No.	9	9	9	9	9	9	9	9	9
	"e" Bars	Size Bar #	13	13	13	13	13	13	13	13	16
		Spacing	457	457	457	457	457	330	457	286	330
	Spacers	Number		34			38			42	
Quan.	Concrete: cu m per lin. ft.		0.51	0.54	0.62	0.57	0.60	0.68	0.63	0.66	0.73
	Reinf: kg per lin. ft.		55	50	60	58	52	63	59	55	67

NOTE:

For boxes of height less than that shown in table, use next greater table height slabs, wall dimensions and reinforcing steel, and make necessary changes in bar lengths, number of spacers and quantities. Number of "d" bars in table is slab total for both cells.

Revision	By	Approved	Date
ORIGINAL		Kercheval	12/75
Add Metric		T. Stanton	03/03
Reviewed	T. Stanton		04/06

SAN DIEGO REGIONAL STANDARD DRAWING

TRIPLE BOX CULVERT
DETAILS No. 1

RECOMMENDED BY THE SAN DIEGO REGIONAL STANDARDS COMMITTEE

T. Stanton 3/10/2003
Chairperson R.C.E. 19246 Date

DRAWING NUMBER D-78A

IMPERIAL TABLE - SPAN 4' (all measuements in feet and/or inches).

For Metric table (1.22m Span) - see drawing D78A

SPAN			4'								
HEIGHT			2'			3'			4'		
STRENGTH CLASSIFICATION			A	B	C	A	B	C	A	B	C
MAX FILL OVER TOP			10	24	38	10	24	38	10	24	38
Conc.	Top Slab	T_1	6 1/4	6 1/4	7 1/4	6 1/4	6 1/4	7 1/4	6 1/4	6 1/4	7 1/4
Conc.	Bottom Slab	T_2	6	7	8 1/4	6	7	8 1/4	6	7	8 1/4
Conc.	Sidewalls	T_3	6	6	6	6	6	6	6	6	6
Reinforcing Steel	"a"	Size Bar #	5	4	5	5	4	5	5	4	5
		Spacing	11	11 1/2	13	11	11 1/2	13	11	11 1/2	13
		Length	14-9	14-8	14-9	14-9	14-8	14-9	14-9	14-8	14-9
	"b" or "b_1"	Size Bar #	5	5	6	5	5	6	5	5	6
		Spacing	11	11 1/2	13	11	11 1/2	13	11	11 1/2	13
		Length "b"	14-2	14-2	14-3	14-2	14-2	14-3	14-2	14-2	14-3
		Length "b_1"	14-0	14-2	14-3	14-0	14-2	14-3	14-0	14-2	14-3
	"c"	Size Bar #	4	5	6	4	5	6	4	5	6
		Spacing	11	11 1/2	13	11	11 1/2	13	11	11 1/2	13
		Length	9-0	9-0	9-0	9-0	9-0	9-0	9-0	9-0	9-0
	"d" Dist Bars	Top Slab-Tot. No.	15	9	9	15	9	9	15	9	9
		Bottom Slab-Tot. No.	9	9	9	9	9	9	9	9	9
	"e" Bars	Size Bar #	4	4	4	4	4	4	4	4	5
		Spacing	18	18	18	18	18	13	18	11 1/2	13
	Spacers	Number	34			38			42		
Quan.	Concrete: C.Y. per lin. ft.		0.67	0.71	0.81	0.75	0.79	0.89	0.82	0.86	0.96
	Reinf :lbs per lin. ft.		122	110	133	127	115	138	131	122	147

NOTE:

For boxes of height less than that shown in table, use next greater table height slabs, wall dimensions and reinforcing steel, and make necessary changes in bar lengths, number of spacers and quantities. Number of "d" bars in table is slab total for both cells.

Revision	By	Approved	Date
ORIGINAL		Kercheval	12/75
Add Metric		T. Stanton	03/03
Reviewed		T. Stanton	04/06

SAN DIEGO REGIONAL STANDARD DRAWING

TRIPLE BOX CULVERT

DETAILS No. 1

RECOMMENDED BY THE SAN DIEGO REGIONAL STANDARDS COMMITTEE

Chairperson R.C.E. 19246 Date 3/10/2003

DRAWING NUMBER D-78B

METRIC TABLE - SPAN 1.52m (all measuements in millimeters unless otherwise noted).
For Imperial table (5' Span) - see drawing D78B

SPAN			1.52m													
HEIGHT			610mm			914mm			1.22m				1.52m			
STRENGTH CLASSIFICATION			A	B	C	A	B	C	A	B	C	D	A	B	C	D
MAX FILL OVER TOP			2.4m	5.2m	7.9m	2.4m	5.2m	7.9m	2.4m	5.2m	7.9m	10.7m	2.4m	5.2m	7.9m	10.7m
Conc.	Top Slab	T_1	171	171	191	171	171	191	171	171	191	216	171	171	191	216
Conc.	Bottom Slab	T_2	159	184	216	159	184	216	159	184	216	241	159	191	216	241
Conc.	Sidewalls	T_3	152	152	152	152	152	152	152	152	152	152	152	152	152	152
Reinforcing Steel	"a"	Size Bar #	16	13	16	16	13	16	5	4	5	5	5	4	5	5
		Spacing	254	286	330	254	286	330	254	279	330	286	254	279	330	286
		Length	5.41m	5.38m	5.41m	5.41m	5.38m	5.41m	5.41m	5.38m	5.41m	5.41m	5.41m	5.38m	5.41m	5.41m
	"b" or "b_1"	Size Bar #	16	16	19	16	16	19	16	16	19	19	16	16	19	19
		Spacing	254	286	13	254	286	330	254	279	330	286	254	279	330	286
		Length "b"	5.26m	5.26m	5.26m	5.26m	5.26m	5.26m	5.26m	5.26m	5.26m	5.26m	5.26m	5.26m	5.26m	5.31m
		Length "b_1"	5.18m	5.23m	5.28m	5.18m	5.23m	5.28m	5.18m	5.23m	5.28m	5.31m	5.18m	5.23m	5.28m	5.31m
	"c"	Size Bar #	13	16	19	13	16	19	13	16	19	19	13	16	19	19
		Spacing	254	286	330	254	286	330	254	279	330	286	254	279	330	286
		Length	3.35m	3.35m	3.35m	3.35m	3.35m	3.35m	3.35m	3.35m	3.35m	3.35m	3.35m	3.35m	3.35m	3.35m
	"d" Dist Bars	Top Slab-Tot. No.	18	9	9	18	9	9	18	9	9	9	18	9	9	9
		Bottom Slab-Tot. No.	9	9	9	9	9	9	9	9	9	9	9	9	9	9
	"e" Bars	Size Bar #	13	13	13	13	13	13	13	13	13	16	13	13	13	19
		Spacing	457	457	457	457	457	457	457	432	286	286	457	279	102	286
	Spacers	Number	34			38			38				42			
Quan.	Concrete: cu m per lin. ft.		0.63	0.66	0.75	0.69	0.73	0.80	0.74	0.78	0.86	0.94	0.80	0.85	0.92	1.00
	Reinf: kg per lin. ft.		68	57	69	70	59	71	71	62	73	82	73	65	78	87

NOTE:

For boxes of height less than that shown in table, use next greater table height slabs, wall dimensions and reinforcing steel, and make necessary changes in bar lengths, number of spacers and quantities. Number of "d" bars in table is slab total for both cells.

Revision	By	Approved	Date
ORIGINAL		Kercheval	12/75
Add Metric		T. Stanton	03/03
Reviewed		T. Stanton	04/06

SAN DIEGO REGIONAL STANDARD DRAWING

TRIPLE BOX CULVERT
DETAILS No. 1

RECOMMENDED BY THE SAN DIEGO REGIONAL STANDARDS COMMITTEE

Chairperson R.C.E. 19246 Date 3/01/2003

DRAWING NUMBER D-78C

IMPERIAL TABLE - SPAN 5' (all measuements in feet and/or inches).
For Metric table (1.52m Span) - see drawing D78C

SPAN			5'													
HEIGHT			2'			3'			4'				5'			
STRENGTH CLASSIFICATION			A	B	C	A	B	C	A	B	C	D	A	B	C	D
MAX FILL OVER TOP			8	17	26	8	17	26	8	17	26	35	8	17	26	35
Conc.	Top Slab	T_1	6 3/4	6 3/4	7 1/2	6 3/4	6 3/4	7 1/2	6 3/4	6 3/4	7 1/2	8 1/2	6 3/4	6 3/4	7 1/2	8 1/2
Conc.	Bottom Slab	T_2	6 1/4	7 1/4	8 1/2	6 1/4	7 1/4	8 1/2	6 1/4	7 1/4	8 1/2	9 1/2	6 1/4	7 1/2	8 1/2	9 1/2
Conc.	Sidewalls	T_3	6	6	6	6	6	6	6	6	6	6	6	6	6	6
Reinforcing Steel	"a"	Size Bar #	5	4	5	5	4	5	5	4	5	5	5	4	5	5
		Spacing	10	11 1/2	13	10	11 1/2	13	10	11	13	11 1/2	10	11	13	11 1/2
		Length	17-9	17-8	17-9	17-9	17-8	17-9	17-9	17-8	17-9	17-9	17-9	17-8	17-9	17-9
	"b" or "b_1"	Size Bar #	5	5	6	5	5	6	5	5	6	6	5	5	6	6
		Spacing	10	11 1/2	13	10	11 1/2	13	10	11	13	11 1/2	10	11	13	11 1/2
		Length "b"	17-3	17-3	17-3	17-3	17-3	17-3	17-3	17-3	17-3	17-3	17-3	17-3	17-3	17-5
		Length "b_1"	17-0	17-2	17-4	17-0	17-2	17-4	17-0	17-2	17-4	17-5	17-0	17-2	17-4	17-5
	"c"	Size Bar #	4	5	6	4	5	6	4	5	6	6	4	5	6	6
		Spacing	10	11 1/2	13	10	11 1/2	13	10	11	13	11 1/2	10	11	13	11 1/2
		Length	11-0	11-0	11-0	11-0	11-0	11-0	11-0	11-0	11-0	11-0	11-0	11-0	11-0	11-0
	"d" Dist Bars	Top Slab-Tot. No.	18	9	9	18	9	9	18	9	9	9	18	9	9	9
		Bottom Slab-Tot. No.	9	9	9	9	9	9	9	9	9	9	9	9	9	9
	"e" Bars	Size Bar #	4	4	4	4	4	4	4	4	4	5	4	4	4	6
		Spacing	18	18	18	18	18	18	18	17	11 1/2	11 1/2	18	11	4	11 1/2
	Spacers	Number	34			38			38				42			
Quan.	Concrete: C.Y. per lin. ft.		0.82	0.87	0.98	0.90	0.95	1.05	0.97	1.02	1.13	1.23	1.04	1.11	1.20	1.31
Quan.	Reinf :lbs per lin. ft.		150	126	153	155	130	157	157	136	161	181	161	143	171	192

NOTE:

For boxes of height less than that shown in table, use next greater table height slabs, wall dimensions and reinforcing steel, and make necessary changes in bar lengths, number of spacers and quantities. Number of "d" bars in table is slab total for both cells.

Revision	By	Approved	Date
ORIGINAL		Kercheval	12/75
Add Metric		T. Stanton	03/03
Reviewed		T. Stanton	04/06

SAN DIEGO REGIONAL STANDARD DRAWING

TRIPLE BOX CULVERT
DETAILS No. 1

RECOMMENDED BY THE SAN DIEGO REGIONAL STANDARDS COMMITTEE

Chairperson R.C.E. 19246 Date 3/01/2003

DRAWING NUMBER D-78D

Revision	By	Approved	Date
ORIGINAL		Kercheval	12/75
Add Metric		T. Stanton	03/03
Reviewed		T. Stanton	04/06

SAN DIEGO REGIONAL STANDARD DRAWING

TRIPLE BOX CULVERT
DETAILS No. 1

RECOMMENDED BY THE SAN DIEGO REGIONAL STANDARDS COMMITTEE

Chairperson R.C.E. 19246 Date 3/01/2003

DRAWING NUMBER D-78E

METRIC TABLE - SPAN 1.83m (all measuements in millimeters unless otherwise noted).
For Imperial table (6' Span) - see drawing D78F

SPAN			1.83m													
HEIGHT			914mm			1.22m			1.52m				1.83m			
STRENGTH CLASSIFICATION			A	B	C	A	B	C	A	B	C	D	A	B	C	D
MAX FILL OVER TOP			914	3.96m	7.01m	914	3.96m	7.01m	914	3.96m	7.01m	9.14m	914	3.96m	7.01m	9.14m
Conc.	Top Slab	T_1	191	191	210	191	191	210	191	191	210	235	191	191	210	235
Conc.	Bottom Slab	T_2	152	197	235	152	197	235	152	203	235	254	152	203	235	260
Conc.	Sidewalls	T_3	152	152	152	152	152	152	152	152	152	152	152	152	152	152
Reinforcing Steel	"a"	Size Bar #	16	13	13	16	13	13	16	13	13	13	16	13	13	13
		Spacing	330	356	292	330	356	292	330	356	292	254	330	356	292	254
		Length	6.35m	6.32m	6.32m	6.35m	6.32m	6.32m	6.35m	6.32m	6.32m	6.32m	6.35m	6.32m	6.32m	6.32m
	"b" or "b_1"	Size Bar #	16	19	19	16	19	19	16	19	19	22	16	19	19	22
		Spacing	330	356	292	330	356	292	330	356	292	254	330	356	292	254
		Length "b"	6.17m	6.17m	6.22m	6.17m	6.17m	6.22m	6.17m	6.17m	6.22m	6.25m	6.17m	6.17m	6.22m	6.25m
		Length "b_1"	6.10m	6.15m	6.22m	6.10m	6.15m	6.22m	6.10m	6.15m	6.22m	6.25m	6.10m	6.15m	6.22m	6.27m
	"c"	Size Bar #	13	19	19	13	19	19	13	19	19	22	13	19	19	22
		Spacing	330	356	292	330	356	292	330	356	292	254	330	356	292	254
		Length	3.96m	3.96m	3.96m	3.96m	3.96m	3.96m	3.96m	3.96m	3.96m	3.96m	3.96m	3.96m	3.96m	3.96m
	"d" Dist Bars	Top Slab-Tot. No.	12	6	6	12	6	6	12	6	6	6	12	6	6	6
		Bottom Slab-Tot. No.	6	6	6	6	6	6	6	6	6	6	6	6	6	6
	"e" Bars	Size Bar #	13	13	13	13	13	13	13	13	16	16	13	16	19	19
		Spacing	457	457	457	457	457	292	457	292	305	254	457	203	305	254
	Spacers	Number	30			33			36				36			
Quan.	Concrete: cu m per lin. ft.		0.80	0.88	0.99	0.86	0.94	1.05	0.91	1.00	1.10	1.19	0.97	1.06	1.16	1.25
Quan.	Reinf: kgs per lin. ft.		82	76	89	83	77	91	85	80	95	107	87	85	100	113

NOTE:

For boxes of height less than that shown in table, use next greater table height slabs, wall dimensions and reinforcing steel, and make necessary changes in bar lengths, number of spacers and quantities. Number of "d" bars in table is slab total for both cells.

IMPERIAL TABLE - SPAN 6' (all measuements in feet and/or inches).

For Metric table (1.83m Span) - see drawing D78E

SPAN			6'													
HEIGHT			3'			4'			5'				6'			
STRENGTH CLASSIFICATION			A	B	C	A	B	C	A	B	C	D	A	B	C	D
MAX FILL OVER TOP			3	13	23	3	13	23	3	13	23	30	3	13	23	30
Conc.	Top Slab	T_1	7 1/2	7 1/2	8 1/4	7 1/2	7 1/2	8 1/4	7 1/2	7 1/2	8 1/4	9 1/4	7 1/2	7 1/2	8 1/4	9 1/4
Conc.	Bottom Slab	T_2	6	7 3/4	9 1/4	6	7 3/4	9 1/4	6	8	9 1/4	10	6	8	9 1/4	10 1/4
Conc.	Sidewalls	T_3	6	6	6	6	6	6	6	6	6	6	6	6	6	6
Reinforcing Steel	"a"	Size Bar #	6	5	5	6	5	5	6	5	5	5	6	5	5	5
		Spacing	13	14	11 1/2	13	14	11 1/2	13	14	11 1/2	10	13	14	11 1/2	10
		Length	20-10	20-9	20-9	20-10	20-9	20-9	20-10	20-9	20-9	20-9	20-10	20-9	20-9	20-9
	"b" or "b_1"	Size Bar #	6	6	6	6	6	6	6	6	6	6	6	6	6	6
		Spacing	13	14	11 1/2	13	14	11 1/2	13	14	11 1/2	10	13	14	11 1/2	10
		Length "b"	20-3	20-3	20-5	20-3	20-3	20-5	20-3	20-3	20-5	20-6	20-3	20-3	20-5	20-6
		Length "b_1"	20-0	20-2	20-5	20-0	20-2	20-5	20-0	20-2	20-5	20-6	20-0	20-0	20-5	20-7
	"c"	Size Bar #	4	6	6	4	6	6	4	6	6	6	4	6	6	6
		Spacing	13	14	11 1/2	13	14	11 1/2	13	14	11 1/2	10	13	14	11 1/2	10
		Length	13-0	13-0	13-0	13-0	13-0	13-0	13-0	13-0	13-0	13-0	13-0	13-0	13-0	13-0
	"d" Dist Bars	Top Slab-Tot. No.	18	9	9	18	9	9	18	9	9	9	18	9	9	9
		Bottom Slab-Tot. No.	9	9	9	9	9	9	9	9	9	9	9	9	9	9
	"e" Bars	Size Bar #	4	4	4	4	4	4	4	4	5	5	4	4	6	6
		Spacing	18	18	18	18	18	11 1/2	18	11 1/2	12	10	18	8	12	10
	Spacers	Number	40			40			52				48			
Quan.	Concrete: C.Y. per lin. ft.		1.05	1.15	1.29	1.12	1.23	1.37	1.19	1.32	1.44	1.55	1.27	1.39	1.52	1.64
	Reinf :lbs per lin. ft.		181	168	196	183	170	200	187	177	209	235	192	187	221	249

Note

For boxes of height less than that shown in table, use next greater table height slabs, wall dimensions and reinforcing steel, and make necessary changes in bar lengths, number of spacers and quantities. Number of "d" bars in table is slab total for both cells.

Revision	By	Approved	Date
ORIGINAL		Kercheval	12/75
Add Metric		T. Stanton	03/03
Reviewed		T. Stanton	04/06

SAN DIEGO REGIONAL STANDARD DRAWING

TRIPLE BOX CULVERT

DETAILS No. 1

RECOMMENDED BY THE SAN DIEGO REGIONAL STANDARDS COMMITTEE

Chairperson R.C.E. 19246 Date 3/01/2003

DRAWING NUMBER D-78F

METRIC TABLE - SPAN 2.44m (all measuements in millimeters unless otherwise noted).

For Imperial table (8' Span) - see drawing D78BH

SPAN			2.44m																
HEIGHT			1.22m			1.52m			1.83m			2.13m				2.44m			
STRENGTH CLASSIFICATION			A	B	C	A	B	C	A	B	C	A	B	C	D	A	B	C	D
MAX FILL OVER TOP			610	3.4m	6.1m	610	3.4m	6.1m	610	3.4m	6.1m	610	3.4m	6.1m	8.5m	610	3.4m	6.1m	8.5m
Conc.	Top Slab	T_1	210	210	260	210	210	260	210	210	260	210	210	260	286	210	210	260	286
Conc.	Bottom Slab	T_2	165	229	279	165	235	279	165	235	279	171	235	11	311	171	235	279	311
Conc.	Sidewalls	T_3	152	152	152	152	152	152	152	152	152	152	152	165	165	178	178	191	216
Reinforcing Steel	"a"	Size Bar #	19	16	16	19	16	16	19	16	16	19	16	16	19	19	16	16	19
		Spacing	286	305	305	286	305	305	286	305	305	286	305	305	267	286	286	305	267
		Length	8.18m	8.15m	8.15m	8.18m	8.15m	8.15m	8.18m	8.15m	8.15m	8.18m	8.15m	8.20m	8.33m	8.28m	8.26m	8.31m	8.43m
	"b" or "b_1"	Size Bar #	19	19	22	19	19	22	19	19	22	19	19	22	22	19	19	22	22
		Spacing	286	305	305	286	305	305	286	305	305	286	305	305	267	286	286	305	267
		Length "b"	8.05m	8.05m	8.10m	8.05m	8.05m	8.10m	8.05m	8.05m	8.10m	8.05m	8.05m	8.15m	8.31m	8.15m	8.15m	8.26m	8.41m
		Length "b_1"	12.19m	8.03m	8.10m	12.19m	8.05m	8.10m	12.19m	8.05m	8.10m	7.95m	8.05m	8.15m	8.31m	8.05m	8.15m	8.26m	8.41m
	"c"	Size Bar #	13	19	22	13	19	22	13	19	22	143	19	22	22	143	19	22	22
		Spacing	286	305	305	286	305	305	286	305	305	286	305	305	267	286	286	305	267
		Length	5.18m	5.18m	5.18m	5.18m	5.18m	5.18m	5.18m	5.18m	5.18m	5.18m	5.18m	5.21m	5.26m	5.23m	5.23m	5.26m	5.31m
	"d" Dist Bars	Top Slab-Tot. No.	24	12	12	24	12	12	24	12	12	24	12	12	12	24	12	12	12
		Bottom Slab-Tot. No.	12	12	12	12	12	12	12	12	12	12	12	12	12	12	12	12	12
	"e" Bars	Size Bar #	13	13	13	13	13	16	13	16	19	13	19	22	22	13	19	22	22
		Spacing	457	457	305	457	305	305	457	305	305	286	305	305	267	286	286	305	267
	Spacers	Number	58			62			62			66				70			88
Quan.	Concrete: cu m per lin. ft.		1.12	1.28	1.52	1.18	1.35	1.57	1.24	1.41	1.64	1.31	1.46	1.73	1.96	1.45	1.61	1.88	2.13
Quan.	Reinf: kg per lin. ft.		118	113	137	121	117	141	121	120	145	125	126	152	186	128	134	157	200

NOTE:

For boxes of height less than that shown in table, use next greater table height slabs, wall dimensions and reinforcing steel, and make necessary changes in bar lengths, number of spacers and quantities. Number of "d" bars in table is slab total for both cells.

Revision	By	Approved	Date
ORIGINAL		Kercheval	12/75
Add Metric		T. Stanton	03/03
Reviewed		T. Stanton	04/06

SAN DIEGO REGIONAL STANDARD DRAWING

TRIPLE BOX CULVERT

DETAILS No. 1

RECOMMENDED BY THE SAN DIEGO REGIONAL STANDARDS COMMITTEE

Chairperson R.C.E. 19246 Date 3/01/2003

DRAWING NUMBER D-78G

IMPERIAL TABLE - SPAN 8' (all measuements in feet and/or inches).
For Metric table (2.44m Span) - see drawing D78G

SPAN			8'															
HEIGHT			4'			5'			6'			7'				8'			
STRENGTH CLASSIFICATION			A	B	C	A	B	C	A	B	C	A	B	C	D	A	B	C	D
MAX FILL OVER TOP			2	11	20	2	11	20	2	11	20	2	11	20	28	2	11	20	28
Conc.	Top Slab	T_1	8 1/4	8 1/4	10 1/4	8 1/4	8 1/4	10 1/4	8 1/4	8 1/4	10 1/4	8 1/4	8 1/4	10 1/4	11 1/2	8 1/4	8 1/4	10 1/4	11 1/2
Conc.	Bottom Slab	T_2	6 1/2	9	11	6 1/2	9 1/4	11	6 1/2	9 1/4	11	6 3/4	9 1/4	11	12 1/4	6 3/4	9 1/4	11	12 1/4
Conc.	Sidewalls	T_3	6	6	6	6	6	6	6	6	6	6	6	6 1/2	6 1/2	7	7	7 1/2	8 1/2
Reinforcing Steel	"a"	Size Bar #	6	5	5	6	5	5	6	5	5	6	5	5	6	6	5	5	6
		Spacing	11 1/2	12	12	11 1/2	12	12	11 1/2	12	12	11 1/2	12	12	10 1/2	11 1/2	11 1/2	12	10 1/2
		Length	26-10	26-9	26-9	26-10	26-9	26-9	26-10	26-9	26-9	26-10	26-9	26-11	27-4	27-2	27-1	27-3	27-8
	"b" or "b_1"	Size Bar #	6	6	7	6	6	7	6	6	7	6	6	7	7	6	6	7	7
		Spacing	11 1/2	12	12	11 1/2	12	12	11 1/2	12	12	11 1/2	12	12	10 1/2	11 1/2	11 1/2	12	10 1/2
		Length "b"	26-5	26-5	26-7	26-5	26-5	26-7	26-5	26-5	26-7	26-5	26-5	26-9	27-3	26-9	26-9	27-1	27-7
		Length "b_1"	26-0	26-4	26-7	26-0	26-5	26-7	26-0	26-5	26-7	26-1	26-5	26-9	27-3	26-5	26-9	27-1	27-7
	"c"	Size Bar #	4	6	7	4	6	7	4	6	7	4	6	7	7	4	6	7	7
		Spacing	11 1/2	12	12	11 1/2	12	12	11 1/2	12	12	11 1/2	12	12	10 1/2	11 1/2	11 1/2	12	10 1/2
		Length	17-0	17-0	17-0	17-0	17-0	17-0	17-0	17-0	17-0	17-0	17-0	17-1	17-3	17-2	17-2	17-3	17-5
	"d" Dist Bars	Top Slab-Tot. No.	24	12	12	24	12	12	24	12	12	24	12	12	12	24	12	12	12
		Bottom Slab-Tot. No.	12	12	12	12	12	12	12	12	12	12	12	12	12	12	12	12	12
	"e" Bars	Size Bar #	4	4	4	4	4	5	4	5	6	4	6	7	7	4	6	7	7
		Spacing	18	18	12	18	12	12	18	12	12	11 1/2	12	12	10 1/2	11 1/2	11 1/2	12	10 1/2
	Spacers	Number		58			62			62			66				70		88
Quan.	Concrete: C.Y. per lin. ft.		1.47	1.67	1.99	1.54	1.76	2.06	1.62	1.84	2.14	1.71	1.91	2.26	2.57	1.90	2.10	2.46	2.79
Quan.	Reinf :lbs per lin. ft.		261	250	301	266	257	310	267	264	320	276	277	336	409	283	295	347	441

NOTE:

For boxes of height less than that shown in table, use next greater table height slabs, wall dimensions and reinforcing steel, and make necessary changes in bar lengths, number of spacers and quantities. Number of "d" bars in table is slab total for both cells.

Revision	By	Approved	Date
ORIGINAL		Kercheval	12/75
Add Metric		T. Stanton	03/03
Reviewed		T. Stanton	04/06

SAN DIEGO REGIONAL STANDARD DRAWING

TRIPLE BOX CULVERT
DETAILS No. 1

RECOMMENDED BY THE SAN DIEGO REGIONAL STANDARDS COMMITTEE

Chairperson R.C.E. 19246 Date 3/01/2003

DRAWING NUMBER D-78H

Revision	By	Approved	Date
ORIGINAL		Kercheval	12/75
Add Metric	T. Stanton	T. Stanton	03/03
Reviewed	T. Stanton	T. Stanton	04/06

SAN DIEGO REGIONAL STANDARD DRAWING

TRIPLE BOX CULVERT
DETAILS No. 1

RECOMMENDED BY THE SAN DIEGO REGIONAL STANDARDS COMMITTEE

Chairperson R.C.E. 19246 Date 3/01/2003

DRAWING NUMBER D-781

METRIC TABLE – SPAN 3.05m (all measuements in millimeters unless otherwise noted).
For Imperial table (10' Span) – see drawing D78BJ

SPAN			3.05m															
HEIGHT			1.52m			1.83m			2.13m			2.44m				3.05m			
STRENGTH CLASSIFICATION			A	B	C	A	B	C	A	B	C	A	B	C	D	A	B	C	D
MAX FILL OVER TOP			610	3.4m	6.1m	610	3.4m	6.1m	610	3.4m	6.1m	610	3.4m	6.1m	28	610	3.4m	6.1m	28
Conc.	Top Slab	T_1	229	254	305	229	254	305	229	254	305	229	254	305	362	229	260	318	368
Conc.	Bottom Slab	T_2	191	273	330	191	273	13	191	273	330	197	279	330	381	203	279	343	381
Conc.	Sidewalls	T_3	152	152	152	152	152	152	152	152	165	178	178	191	216	203	216	229	254
Reinforcing Steel	"a"	Size Bar #	19	19	19	19	19	19	19	19	19	19	19	19	22	19	19	19	22
		Spacing	267	330	254	254 1/2	330	254	267	330	254	267	330	254	279	267	330	254	279
		Length	10.01m	10.01m	10.01m	10.01m	10.01m	10.01m	10.01m	10.01m	10.01m	10.11m	10.11m	10.16m	10.26m	10.21m	10.26m	10.31m0	10.41m
	"b" or "b_1"	Size Bar #	19	22	22	19	22	22	19	22	22	19	22	22	25	19	22	22	25
		Spacing	267	330	254	254 1/2	330	254	267	330	254	267	330	254	279	267	330	254	279
		Length "b"	9.91m	9.93m	10.01m	9.91m	9.93m	10.01m	9.91m	9.93m	10.06m	10.01m	10.03m	10.16m	10.31m	9.80m	10.19m	10.31m	10.49m
		Length "b_1"	9.80m	9.93m	10.03m	9.80m	9.93m	10.03m	9.80m	9.93m	10.31m	9.91m	10.03m	10.19m	10.31m	10.03m	10.19m	10.31m	10.49m
	"c"	Size Bar #	16	22	22	16	22	22	16	22	22	16	22	22	25	16	22	22	25
		Spacing	267	330	254	267	330	254	267	13	254	267	330	254	279	267	330	254	279
		Length	6.40m	6.40m	6.40m	6.40m	6.40m	6.40m	6.40m	6.40m	6.43m	6.45m	6.45m	6.48m	6.53m	6.50m	6.53m	6.55m	6.60m
	"d" Dist Bars	Top Slab–Tot. No.	27	15	15	27	15	15	27	15	15	27	15	15	15	27	15	15	15
		Bottom Slab–Tot. No.	15	15	15	15	15	15	15	15	15	15	15	15	15	15	15	15	15
	"e" Bars	Size Bar #	13	13	16	13	16	19	13	19	22	13	19	22	25	16	19	25	25
		Spacing	457	330	254	457	330	254	330	330	254	267	305	10	279	267	229	254	229
	Spacers	Number	68			68			72			76			94	102			
Quan.	Concrete: cu m per lin. ft.		1.51	1.83	2.16	1.57	1.90	2.22	1.63	1.95	2.32	1.79	2.12	2.47	2.90	2.05	2.43	2.85	3.23
Quan.	Reinf kg per lin. ft.		162	169	213	163	172	219	166	177	228	171	182	233	268	191	205	262	287

NOTE:

For boxes of height less than that shown in table, use next greater table height slabs, wall dimensions and reinforcing steel, and make necessary changes in bar lengths, number of spacers and quantities. Number of "d" bars in table is slab total for both cells.

IMPERIAL TABLE - SPAN 10' (all measuements in feet and/or inches).
For Metric table (3.05m Span) - see drawing D78I

SPAN			10'																
HEIGHT			5'			6'			7'			8'				10'			
STRENGTH CLASSIFICATION			A	B	C	A	B	C	A	B	C	A	B	C	D	A	B	C	D
MAX FILL OVER TOP			2	11	20	2	11	20	2	11	20	2	11	20	28	2	11	20	28
Conc.	Top Slab	T_1	9	10	12	9	10	12	9	10	12	9	10	12	14 1/4	9	10 1/4	12 1/2	14 1/2
Conc.	Bottom Slab	T_2	7 1/2	10 3/4	13	7 1/2	10 3/4	13	7 1/2	10 3/4	13	7 3/4	11	13	15	8	11	13 1/2	15
Conc.	Sidewalls	T_3	6	6	6	6	6	6	6	6	6 1/2	7	7	7 1/2	8 1/2	8	8 1/2	9	10
Reinforcing Steel	"a"	Size Bar #	6	6	6	6	6	6	6	6	6	6	6	6	7	6	6	6	7
		Spacing	10 1/2	13	10	10 1/2	13	10	10 1/2	13	10	10 1/2	13	10	11	10 1/2	13	10	11
		Length	32-10	32-10	32-10	32-10	32-10	32-10	32-10	32-10	32-10	33-2	33-2	33-4	33-8	33-6	33-8	33-10	34-2
	"b" or "b_1"	Size Bar #	6	7	7	6	7	7	6	7	7	6	7	7	8	6	7	7	8
		Spacing	10 1/2	13	10	10 1/2	13	10	10 1/2	13	10	10 1/2	13	10	11	10 1/2	13	10	11
		Length "b"	32-6	32-7	32-10	32-6	32-7	32-10	32-6	32-7	33-0	32-10	32-11	33-4	33-11	32-2	33-5	33-11	34-5
		Length "b_1"	32-2	32-7	32-11	32-2	32-7	32-11	32-2	32-7	33-1	32-6	32-11	33-5	33-11	32-11	33-5	33-11	34-5
	"c"	Size Bar #	5	7	7	5	7	7	5	7	7	5	7	7	8	5	7	7	8
		Spacing	10 1/2	13	10	10 1/2	13	10	10 1/2	13	10	10 1/2	13	10	11	10 1/2	13	10	11
		Length	21-0	21-0	21-0	21-0	21-0	21-0	21-0	21-0	21-1	21-2	21-2	21-3	21-5	21-4	21-5	21-6	21-8
	"d" Dist Bars	Top Slab-Tot. No.	27	15	15	27	15	15	27	15	15	27	15	15	15	27	15	15	15
		Bottom Slab-Tot. No.	15	15	15	15	15	15	15	15	15	15	15	15	15	15	15	15	15
	"e" Bars	Size Bar #	4	4	5	4	5	6	4	6	7	4	6	7	8	5	6	8	8
		Spacing	18	13	10	18	13	10	13	13	10	10 1/2	12	10	11	10 1/2	9	10	9
	Spacers	Number	68			68			72			76			94	102			
Quan.	Concrete: C.Y. per lin. ft.		1.98	2.40	2.82	2.06	2.48	2.90	2.13	2.55	3.03	2.34	2.77	3.23	3.78	2.68	3.18	3.73	4.22
Quan.	Reinf :lbs per lin. ft.		358	372	470	359	379	482	367	391	502	377	402	514	590	421	453	577	632

NOTE:

For boxes of height less than that shown in table, use next greater table height slabs, wall dimensions and reinforcing steel, and make necessary changes in bar lengths, number of spacers and quantities. Number of "d" bars in table is slab total for both cells.

Revision	By	Approved	Date
ORIGINAL		Kerchevol	12/75
Add Metric		T. Stanton	03/03
Reviewed		T. Stanton	04/06

SAN DIEGO REGIONAL STANDARD DRAWING

TRIPLE BOX CULVERT
DETAILS No. 1

RECOMMENDED BY THE SAN DIEGO REGIONAL STANDARDS COMMITTEE

Chairperson R.C.E. 19246 Date 3/01/2003

DRAWING NUMBER D-78J

METRIC TABLE – SPAN 3.66m (all measuements in millimeters unless otherwise noted).
For Imperial table (12' Span) – see drawing D78BJ

SPAN			3.66m																			
HEIGHT			1.83m			2.13m			2.44m			2.74m				3.05m				3.66m			
STRENGTH CLASSIFICATION			A	B	C	A	B	C	A	B	C	A	B	C	D	A	B	C	D	A	B	C	D
MAX FILL OVER TOP			610	3m	5.5m	610	3m	5.5m	610	3m	5.5m	2	3.4m	20	9.1m	610	3.4m	20	9.1m	610	3.4m	20	9.1m
Conc.	Top Slab	T_1	260	286	356	260	286	356	260	286	356	260	305	375	451	260	305	375	451	260	305	375	451
Conc.	Bottom Slab	T_2	210	305	368	216	305	375	216	305	375	222	318	394	464	222	318	394	464	229	324	400	464
Conc.	Sidewalls	T_3	152	152	165	152	152	178	178	178	191	203	203	229	254	203	203	229	267	229	229	267	305
Reinforcing Steel	"a"	Size Bar #	22	19	22	22	19	22	22	19	22	22	19	22	25	22	19	22	25	22	19	22	25
		Spacing	305	11	286	305	279	286	305	279	286	305	267	279	286	305	267	279	286	305	267	279	286
		Length	11.91m	11.84m	11.96m	11.91m	11.84m	12.01m	12.01m	11.94m	12.07m	12.12m	12.04m	12.22m	12.45m	12.12m	12.04m	12.22m	12.50m	12.22m	11.91m	12.37m	12.65m
	"b" or "b_1"	Size Bar #	22	22	25	22	22	25	22	22	25	22	22	25	29	22	22	25	29	22	22	25	29
		Spacing	305	279	286	305	279	286	305	279	286	305	267	279	286	305	267	279	286	305	267	279	286
		Length "b"	11.76m	11.81m	11.96m	11.76m	11.81m	12.01m	11.86m	11.91m	12.07m	11.96m	12.04m	12.24m	12.45m	11.96m	12.04m	12.24m	12.50m	12.07m	11.91m	12.40m	12.65m
		Length "b_1"	11.66m	11.76m	11.94m	11.66m	11.81m	12.01m	11.76m	11.91m	12.07m	11.89m	12.04m	12.24m	12.45m	11.89m	12.04m	12.24m	12.50m	11.99m	11.91m	12.42m	12.65m
	"c"	Size Bar #	19	22	25	19	22	25	19	22	25	19	22	25	29	19	22	25	29	19	22	25	29
		Spacing	305	279	286	305	279	286	305	279	286	305	267	279	286	305	267	279	286	305	267	279	286
		Length	7.62m	7.62m	7.65m	7.62m	7.62m	7.67m	7.67m	7.67m	7.70m	7.72m	7.72m	7.77m	7.82m	7.72m	7.72m	7.77m	7.85m	7.77m	7.77m	7.85m	7.92m
	"d" Dist Bars	Top Slab-Tot. No.	36	15	15	36	15	15	36	15	15	36	15	15	15	36	15	15	15	36	15	15	15
		Bottom Slab-Tot. No.	15	15	15	15	15	15	15	15	15	15	15	15	15	15	15	15	15	15	15	15	15
	"e" Bars	Size Bar #	13	13	19	13	13	19	13	13	19	13	19	22	25	16	22	25	25	19	22	29	29
		Spacing	457	178	286	305	146	286	305	140	229	254	267	279	286	305	267	279	165	305	229	279	229
	Spacers	Number	76			80			84			104				110				116			
Quan.	Concrete: cu m per lin. ft.		1.99	2.43	2.92	2.06	2.49	3.04	2.20	2.64	3.16	2.39	2.90	3.52	4.17	2.47	2.97	3.61	4.32	2.77	3.27	4.01	4.72
Quan.	Reinf kg per lin. ft.		222	229	285	225	234	289	229	239	297	243	264	326	396	249	275	338	426	261	288	360	440

NOTE:

For boxes of height less than that shown in table, use next greater table height slabs, wall dimensions and reinforcing steel, and make necessary changes in bar lengths, number of spacers and quantities. Number of "d" bars in table is slab total for both cells.

Revision	By	Approved	Date
ORIGINAL		Kercheval	12/75
Add Metric		T. Stanton	03/03
Reviewed		T. Stanton	04/06

SAN DIEGO REGIONAL STANDARD DRAWING

TRIPLE BOX CULVERT
DETAILS No. 1

RECOMMENDED BY THE SAN DIEGO REGIONAL STANDARDS COMMITTEE

Chairperson R.C.E. 19246 Date 3/01/2003

DRAWING NUMBER D-78K

Revision	By	Approved	Date
ORIGINAL		Kercheval	12/75
Add Metric		T. Stanton	03/03
Reviewed		T. Stanton	04/06

SAN DIEGO REGIONAL STANDARD DRAWING

TRIPLE BOX CULVERT
DETAILS No. 1

IMPERIAL TABLE - SPAN 12' (all measuements in feet and/or inches).
For Metric table (3.66m Span) - see drawing D78I

SPAN			12'																				
HEIGHT			6'			7'			8'			9'				10'				12'			
STRENGTH CLASSIFICATION			A	B	C	A	B	C	A	B	C	A	B	C	D	A	B	C	D	A	B	C	D
MAX FILL OVER TOP			2	10	18	2	10	18	2	10	18	2	11	20	30	2	11	20	30	2	11	20	30
Conc.	Top Slab	T_1	10 1/4	11 1/2	14	10 1/4	11 1/2	14	10 1/4	11 1/2	14	10 1/4	12	14 3/4	17 3/4	10 1/4	12	14 3/4	17 3/4	10 1/4	12	14 3/4	17 3/4
Conc.	Bottom Slab	T_2	8 1/4	12	14 1/2	8 1/2	12	14 3/4	8 1/2	12	14 3/4	8 3/4	12 1/2	15 1/2	18 1/4	8 3/4	12 1/2	15 1/2	18 1/4	9	12 3/4	15 3/4	18 1/4
Conc.	Sidewalls	T_3	6	6	6 1/2	6	6	7	7	7	7 1/2	8	8	9	10	8	8	9	10 1/2	9	9	10 1/2	12
Reinforcing Steel	"a"	Size Bar #	7	6	7	7	6	7	7	6	7	7	6	7	8	7	6	7	8	7	6	7	8
		Spacing	12	11	11 1/2	12	11	11 1/2	12	11	11 1/2	12	10 1/2	11	11 1/2	12	10 1/2	11	11 1/2	12	10 1/2	11	11 1/2
		Length	39-1	38-10	39-3	39-1	38-10	39-5	39-5	39-2	39-7	39-9	39-6	40-1	40-10	39-9	39-6	40-1	41-0	40-1	39-10	40-7	41-6
	"b" or "b_1"	Size Bar #	7	7	8	7	7	8	7	7	8	7	7	8	9	7	7	8	9	7	7	8	9
		Spacing	12	11	11 1/2	12	11	11 1/2	12	11	11 1/2	12	10 1/2	11	11 1/2	12	10 1/2	11	11 1/2	12	10 1/2	11	11 1/2
		Length "b"	38-7	38-9	39-3	38-7	38-9	39-5	38-11	39-1	39-7	39-3	39-6	40-2	40-10	39-3	39-6	40-2	41-0	39-7	39-10	40-8	41-6
		Length "b_1"	38-3	38-7	39-2	38-3	38-9	39-5	38-7	39-1	39-7	39-0	39-6	40-2	40-10	39-0	39-6	40-2	41-0	39-4	39-10	40-9	41-6
	"c"	Size Bar #	6	7	8	6	7	8	6	7	8	6	7	8	9	6	7	8	9	6	7	8	9
		Spacing	12	11	11 1/2	12	11	11 1/2	12	11	11 1/2	12	10 1/2	11	11 1/2	12	10 1/2	11	11 1/2	12	10 1/2	11	11 1/2
		Length	25-0	25-0	25-1	25-0	25-0	25-2	25-2	25-2	25-3	25-4	25-4	25-6	25-8	25-4	25-4	25-6	25-9	25-6	25-6	25-9	26-0
	"d" Dist Bars	Top Slab-Tot. No.	36	15	15	36	15	15	36	15	15	36	15	15	15	36	15	15	15	36	15	15	15
		Bottom Slab-Tot. No.	15	15	15	15	15	15	15	15	15	15	15	15	15	15	15	15	15	15	15	15	15
	"e" Bars	Size Bar #	4	4	6	4	4	6	4	4	6	4	6	7	8	5	7	8	8	6	7	9	9
		Spacing	18	7	11 1/2	12	5 3/4	11 1/2	12	5 1/2	9	10	10 1/2	11	11 1/2	12	10 1/2	11	6 1/2	12	9	11	9
	Spacers	Number	76			80			84			104				110				116			
Quan.	Concrete: C.Y. per lin. ft.		2.60	3.18	3.82	2.70	3.26	3.98	2.88	3.45	4.13	3.13	3.79	4.61	5.45	3.23	3.89	4.72	5.65	3.62	4.28	5.24	6.18
Quan.	Reinf :lbs per lin. ft.		489	505	628	497	516	637	505	527	654	536	582	719	872	548	606	745	939	575	636	793	963

NOTE:

For boxes of height less than that shown in table, use next greater table height slabs, wall dimensions and reinforcing steel, and make necessary changes in bar lengths, number of spacers and quantities. Number of "d" bars in table is slab total for both cells.

RECOMMENDED BY THE SAN DIEGO REGIONAL STANDARDS COMMITTEE

Chairperson R.C.E. 19246 Date 3/10/2003

DRAWING NUMBER D-78L

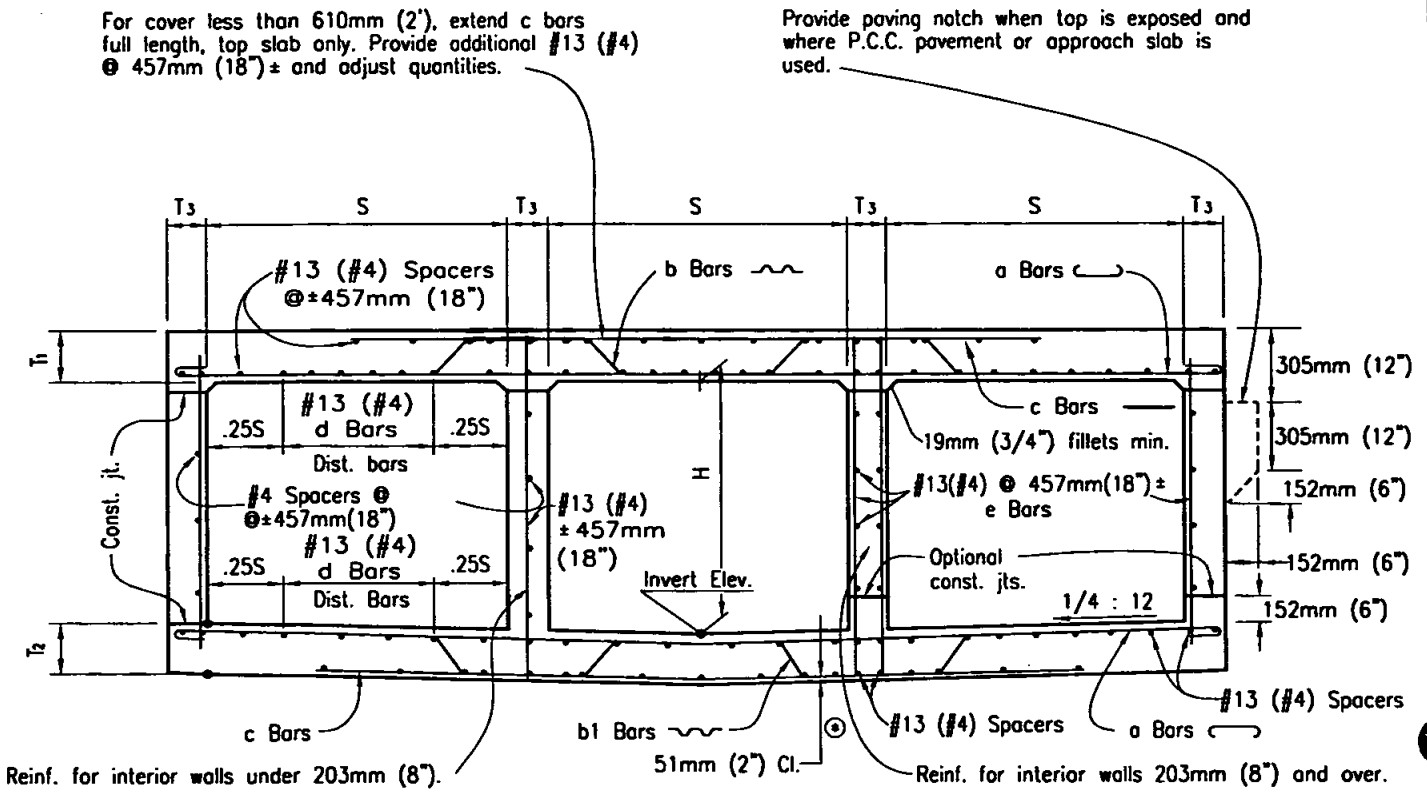

TYPICAL SECTION

⊙ For reinforcement clearance, except at bottom, see "Miscellaneous Details."

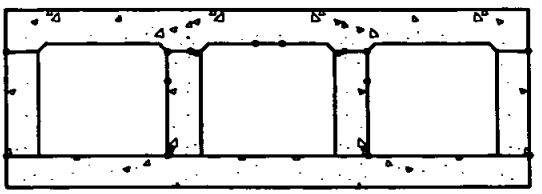

FLAT INVERT ALTERNATIVE

(When shown)

Revision	By	Approved	Date
ORIGINAL		Kercheval	12/75
Add Metric		T. Stanton	03/03
Reviewed		T. Stanton	04/06

SAN DIEGO REGIONAL STANDARD DRAWING

TRIPLE BOX CULVERT DETAILS NO.2

RECOMMENDED BY THE SAN DIEGO REGIONAL STANDARDS COMMITTEE

T. Stanton 3/10/2003

Chairperson R.C.E. 19246 Date

DRAWING NUMBER **D-78M**

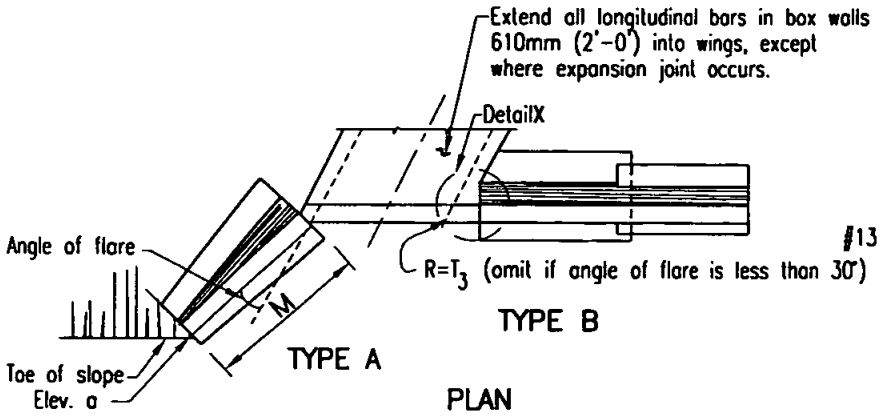

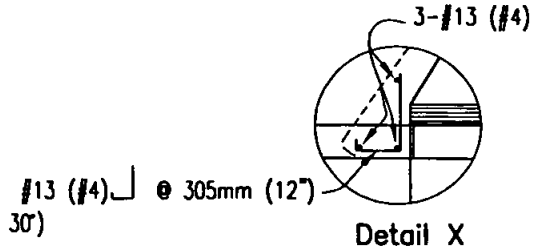

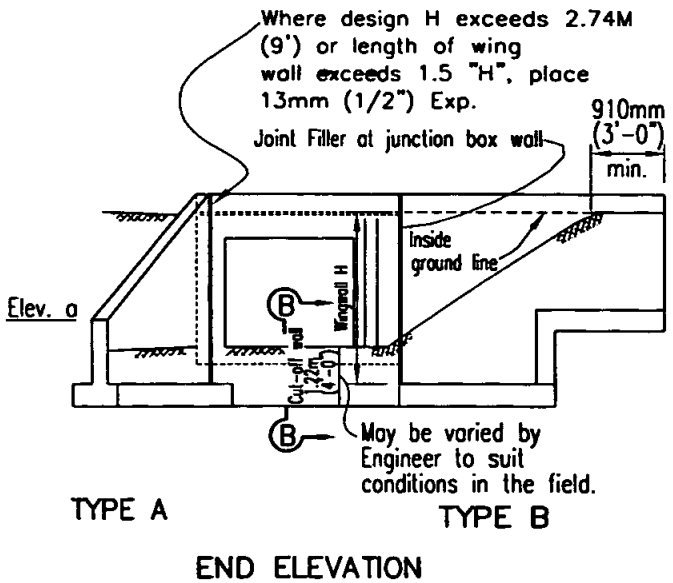

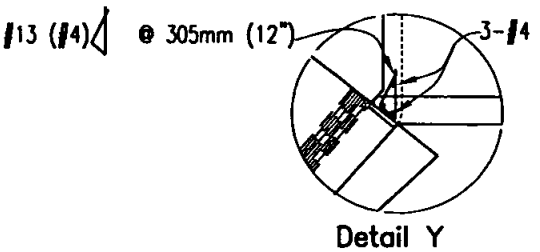

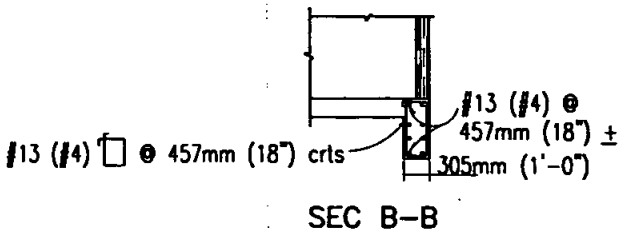

NOTE:
Where 1 1/2:1 surcharge exeeds 1.52m (5'), use Type 2 Retaining Wall.

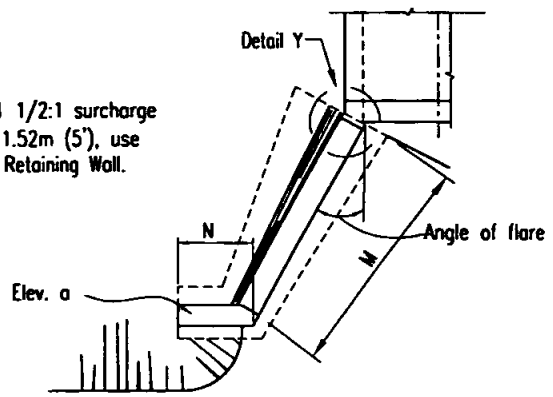

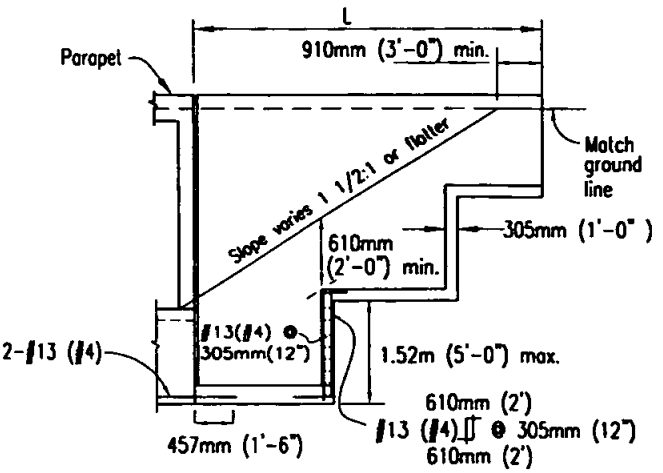

Revision	By	Approved	Date
ORIGINAL		Kercheval	12/75
Add Metric		T. Stanton	03/03
Reviewed		T. Stanton	04/06

SAN DIEGO REGIONAL STANDARD DRAWING

BOX CULVERT WINGWALL
TYPES A, B & C
DETAILS NO. 1

RECOMMENDED BY THE SAN DIEGO REGIONAL STANDARDS COMMITTEE

T. Stanton 3/10/2003

Chairperson R.C.E. 19246 Date

DRAWING NUMBER **D-79A**

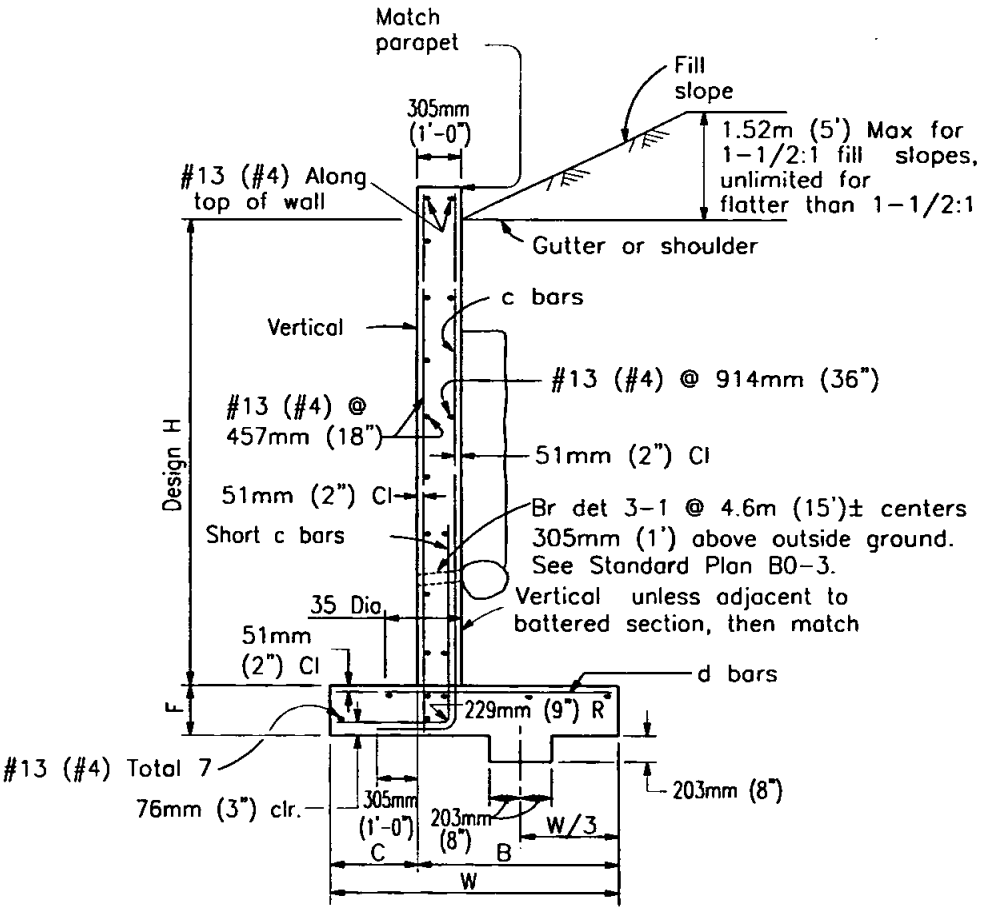

TYPICAL SECTION

H=1.22m (4') Thru 3.66m (12')

Revision	By	Approved	Date
ORIGINAL		Kercheval	12/75
Add Metric		T. Stanton	03/03
Reviewed		T. Stanton	04/06

SAN DIEGO REGIONAL STANDARD DRAWING

BOX CULVERT WINGWALL
TYPES A, B & C
DETAILS NO. 2

RECOMMENDED BY THE SAN DIEGO REGIONAL STANDARDS COMMITTEE

T. Stanton 3/01/2003

Chairperson R.C.E. 19246 Date

DRAWING NUMBER **D-79B**

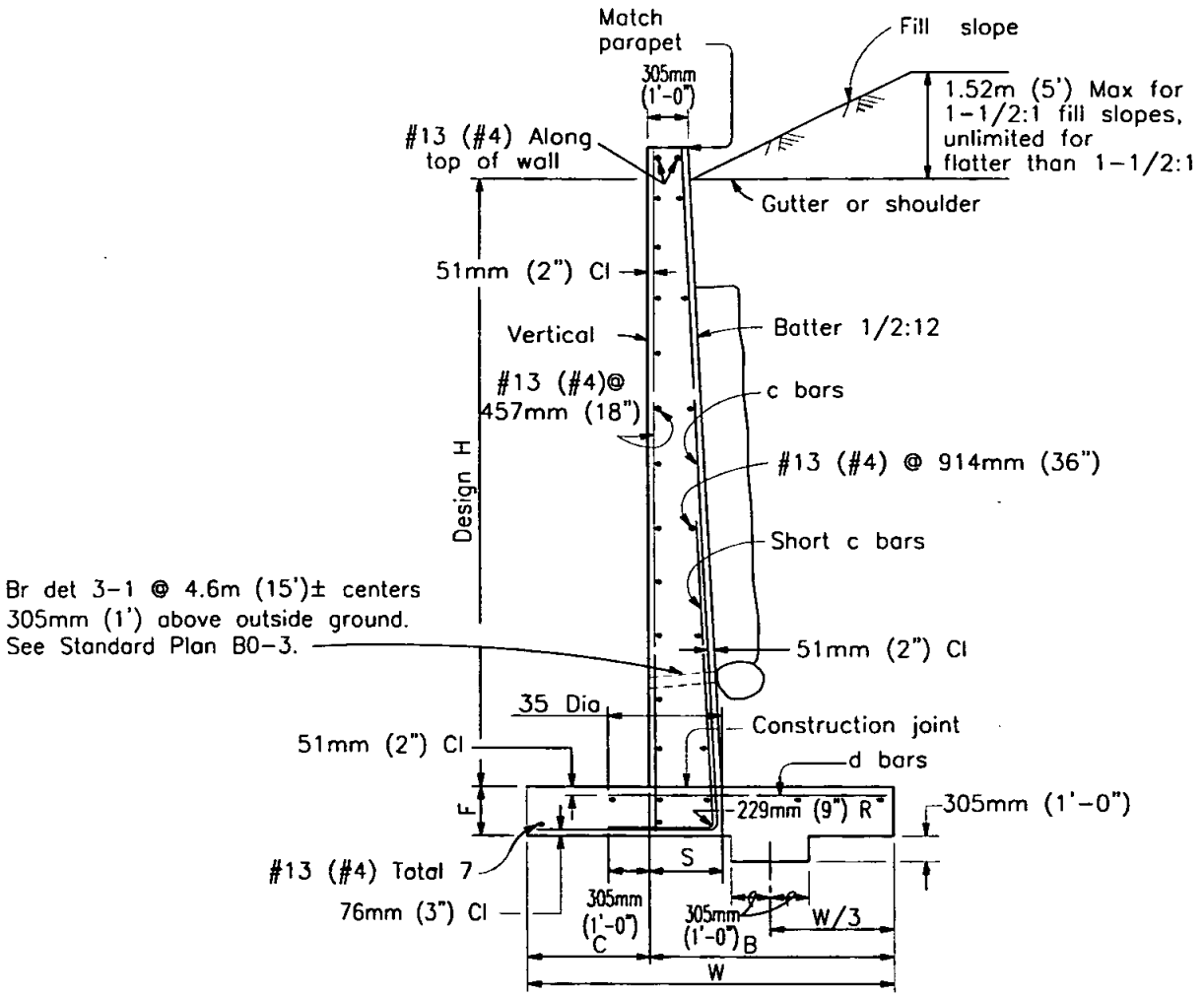

TYPICAL SECTION

H=4.0m (13') Thru 4.9m (16')

Revision	By	Approved	Date
ORIGINAL		Kercheval	12/75
Add Metric		T. Stanton	03/03
Reviewed		T. Stanton	04/06

SAN DIEGO REGIONAL STANDARD DRAWING

BOX CULVERT WINGWALL
TYPES A, B & C
DETAILS NO. 2

RECOMMENDED BY THE SAN DIEGO REGIONAL STANDARDS COMMITTEE

T. Stanton 3/01/2003

Chairperson R.C.E. 19246 Date

DRAWING NUMBER **D-79C**

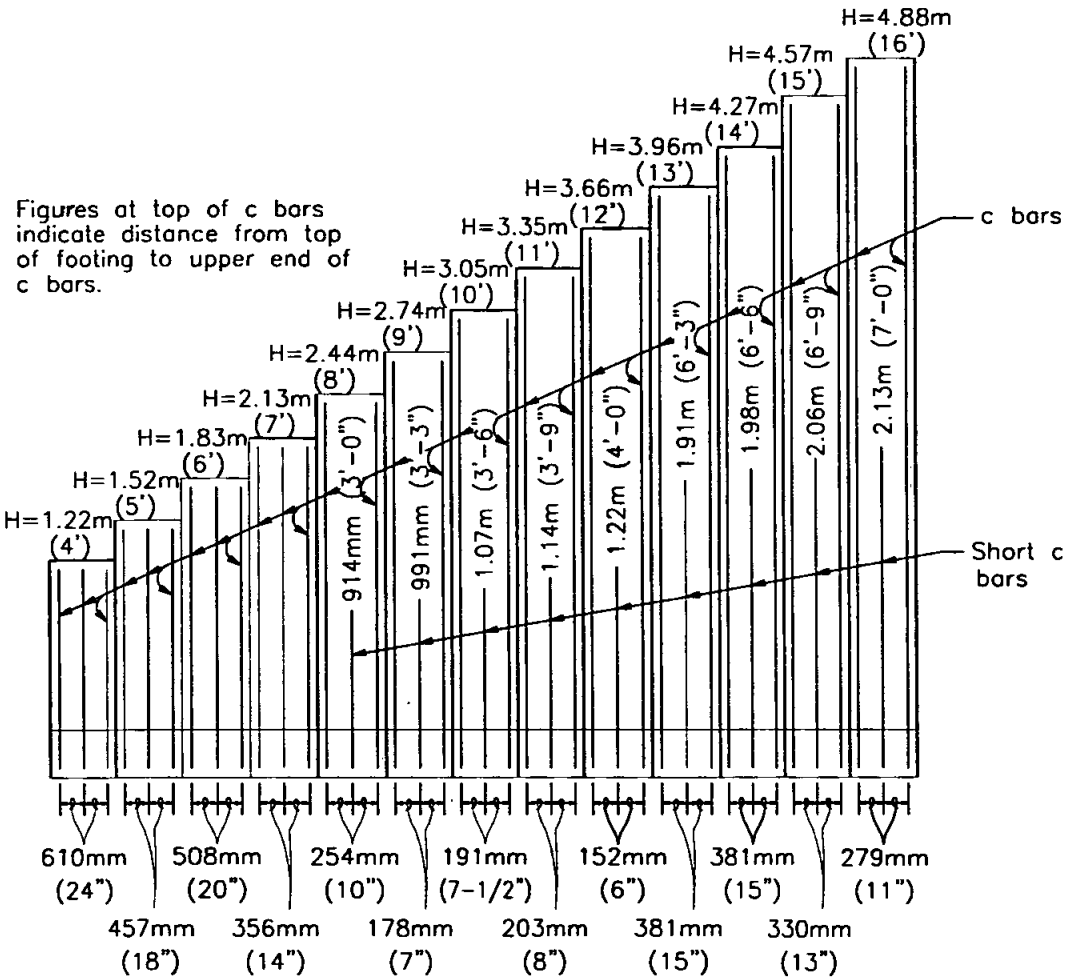

TYPICAL LAYOUT EXAMPLE 1

Revision	By	Approved	Date
ORIGINAL		Kercheval	12/75
Add Metric		T. Stanton	03/03
Reviewed		T. Stanton	04/06

SAN DIEGO REGIONAL STANDARD DRAWING

BOX CULVERT WINGWALL
TYPES A, B & C
DETAILS NO. 2

RECOMMENDED BY THE SAN DIEGO REGIONAL STANDARDS COMMITTEE

T. Stanton 3/10/2003

Chairperson R.C.E. 19246 Date

DRAWING NUMBER **D-79D**

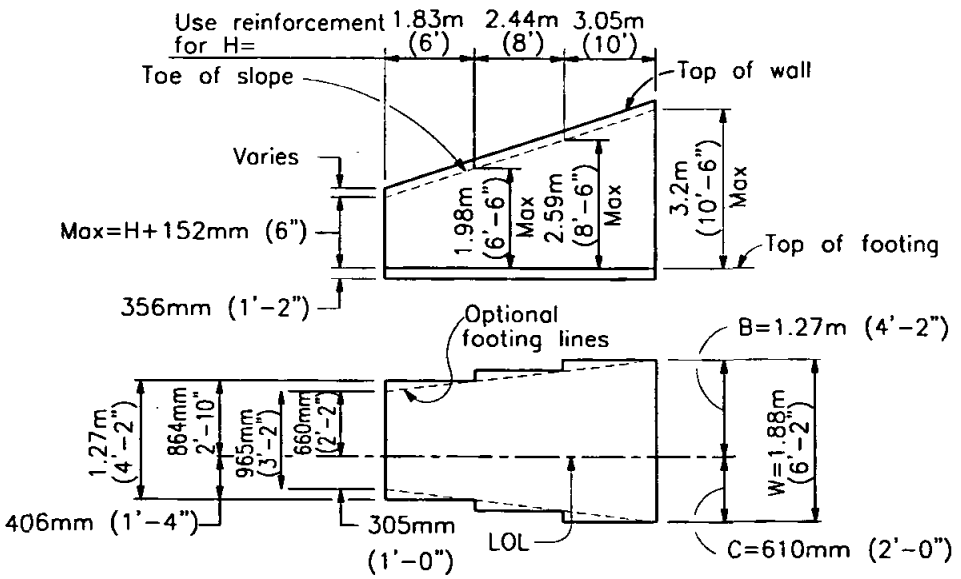

TYPICAL LAYOUT EXAMPLE 2

NOTES:

1. Unit Stresses: f_s=138 Mpa (20,000 psi), f_c=8.3Mpa (1,200 psi), n=10
   Maximum Toe Pressure = 144Kpa (1-1/2 Tons/sq. ft).
   Elevations, length and angle of flare of wings may be varied by the Engineer to suit conditions encountered in the field.

2. Walls designed for 610mm (2') liveload surcharge, 1-1/2:1 sloping surcharge not to exceed 1.52m (5') in elevation plus 610mm (2') liveload surcharge, or unlimited 2:1 surcharge. Dimensions H, L, M, N, Elevation a and Angle of flare (as apply) are shown on the plans.

3. Wall height may be exceeded by 152mm (6") before going to next greater H. Eliminate cutoff wall if adjacent channel is paved and skew is 20° maximum.

Revision	By	Approved	Date
ORIGINAL		Kercheval	12/75
Add Metric		T. Stanton	03/03
Reviewed		T. Stanton	04/06

SAN DIEGO REGIONAL STANDARD DRAWING

BOX CULVERT WINGWALL
TYPES A, B & C
DETAILS NO. 2

RECOMMENDED BY THE SAN DIEGO REGIONAL STANDARDS COMMITTEE

T. Stanton 3/01/2003

Chairperson R.C.E. 19246 Date

DRAWING NUMBER **D-79E**

REINFORCED CONCRETE WINGWALLS – METRIC

H	1.22m	1.52m	1.83m	2.13m	2.44m	2.74m	3.05m	3.35m	3.66m	3.96m	4.27m	4.57m	4.88m
W	965mm	1.12m	1.27m	1.42m	1.57m	1.73m	1.88m	2.03m	2.18m	2.34m	2.49m	2.64m	2.79m
C	305mm	356mm	406mm	457mm	508mm	559mm	610mm	660mm	711mm	762mm	813mm	864mm	914mm
B	660mm	762mm	864mm	965mm	1.07m	1.17m	1.27m	1.37m	1.47m	1.57m	1.68m	1.78m	1.88m
F	1'-2"												
Batter	None									1/2 : 12			
S	305mm	305mm	305mm	305mm	305mm	305mm	305mm	305mm	305mm	1'-6 ½"	1'-7"	1'-7 ½"	1'-8"
c Bars (mm)	#13@254	#13@457	#16@508	#16@356	#16@254	#16@178	#19@191	#22@203	#22@152	#29@381	#32@381	#32@330	#32@279
d Bars (mm)	#13@254	#13@457	#16@508	#16@356	#16@254	#19@356	#22@381	#25@16	#22@305	#25@381	#29@381	#32@330	#29@279
Conc cu m/lf	0.25	0.30	0.34	0.38	0.43	0.47	0.52	0.56	0.61	0.78	0.85	0.91	0.97
Reinf #/lf	13	16	19	25	30	37	49	62	76	73	90	104	125

NOTE: Quantities do not include that portion above the design H limit.

REINFORCED CONCRETE WINGWALLS – IMPERIAL

H	4'	5'	6'	7'	8'	9'	10'	11'	12'	13'	14'	15'	16'
W	3'-2"	3'-8"	4'-2"	4'-8"	5'-2"	5'-8"	6'-2"	6'-8"	7'-2"	7'-8"	8'-2"	8'-8"	9'-2"
C	1'-0"	1'-2"	1'-4"	1'-6"	1'-8"	1'-10"	2'-0"	2'-2"	2'-4"	2'-6"	2'-8"	2'-10"	3'-0"
B	2'-2"	2'-6"	2'-10"	3'-2"	3'-6"	3'-10"	4'-2"	4'-6"	4'-10"	5'-2"	5'-6"	5'-10"	6'-2"
F	1'-2"												
Batter	None									1/2 : 12			
S	1'-0"	1'-0"	1'-0"	1'-0"	1'-0"	1'-0"	1'-0"	1'-0"	1'-0"	1'-6 ½"	1'-7"	1'-7 ½"	1'-8"
c Bars	#4@24	#4@18	#5@20	#5@14	#5@10	#5@7	#6@7½	#7@8	#7@6	#9@15	#10@15	#10@13	#10@11
d Bars	#4@24	#4@18	#5@20	#5@14	#5@10	#6@14	#7@15	#8@16	#7@12	#8@15	#9@15	#10@13	#9@11
Conc cy/lf	0.32	0.38	0.44	0.49	0.55	0.61	0.67	0.73	0.79	1.02	1.10	1.18	1.26
Reinf #/lf	13	16	19	25	30	37	49	62	76	73	90	104	125

NOTE: Quantities do not include that portion above the design H limit.

Revision	By	Approved	Date
ORIGINAL		Kercheval	12/75
Add Metric		T. Stanton	03/03
Reviewed		T. Stanton	04/06

SAN DIEGO REGIONAL STANDARD DRAWING

BOX CULVERT WINGWALL
TYPES A, B & C
DETAILS NO. 2

RECOMMENDED BY THE SAN DIEGO REGIONAL STANDARDS COMMITTEE

Chairperson R.C.E. 19246 Date 3/10/2003

DRAWING NUMBER **D-79F**

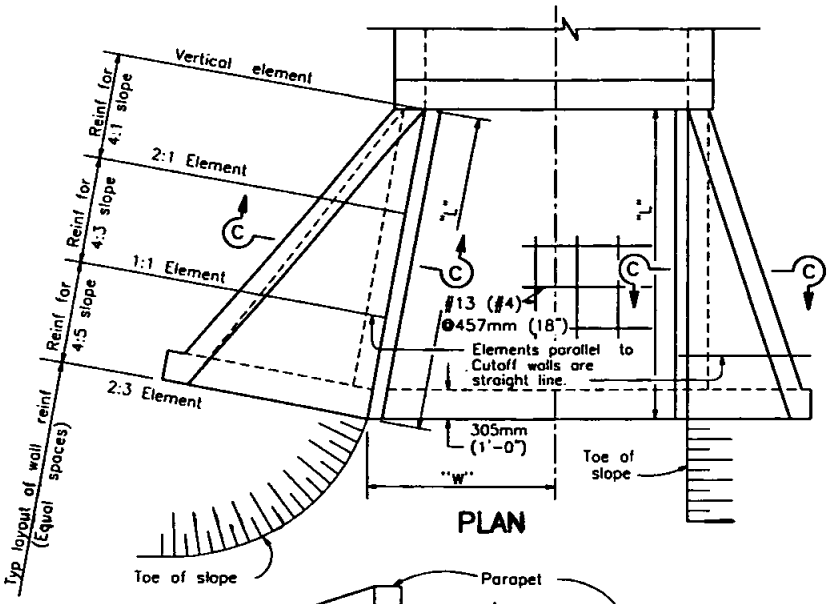

PLAN

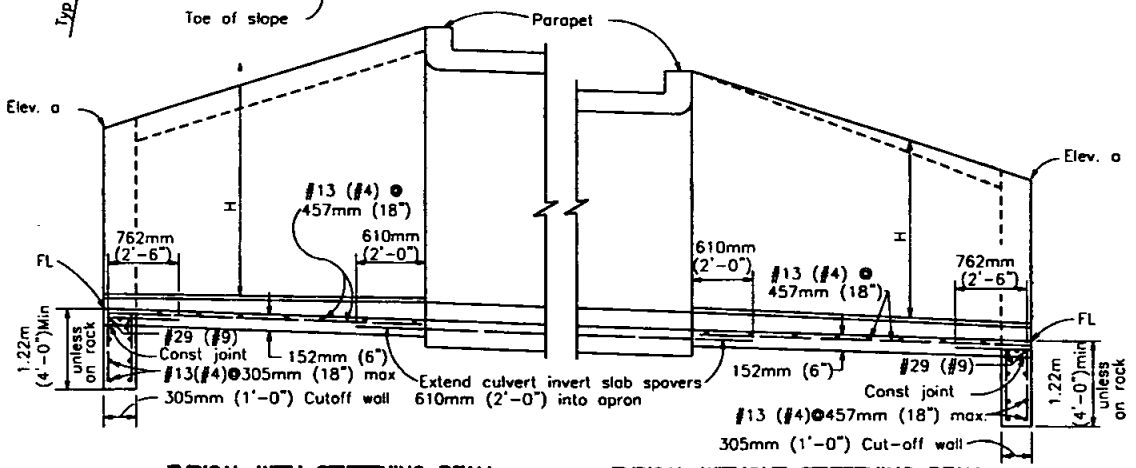

TYPICAL WITH STIFFENING BEAM

TYPICAL WITHOUT STIFFENING BEAM

PART LONGITUDAL SECTION

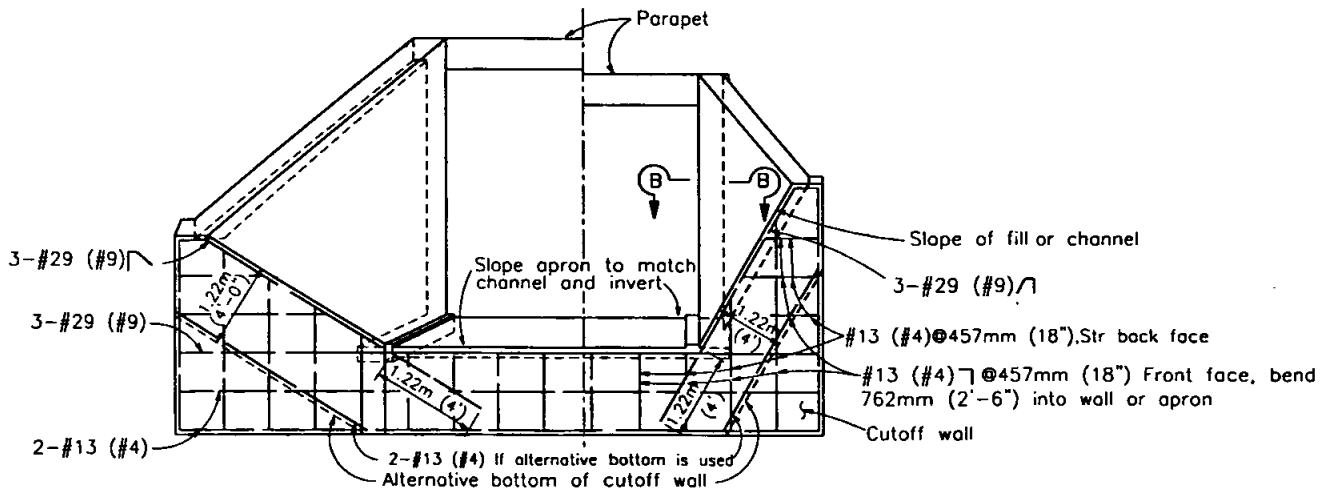

END ELEVATION

Revision	By	Approved	Date
ORIGINAL		Kercheval	12/75
Add Metric		T. Stanton	03/03
Reviewed		T. Stanton	04/06

SAN DIEGO REGIONAL STANDARD DRAWING

BOX CULVERT WARPED WINGWALL DETAILS NO. 1

RECOMMENDED BY THE SAN DIEGO REGIONAL STANDARDS COMMITTEE

T. Stanton 3/01/2003

Chairperson R.C.E. 19246 Date

DRAWING NUMBER **D-80A**

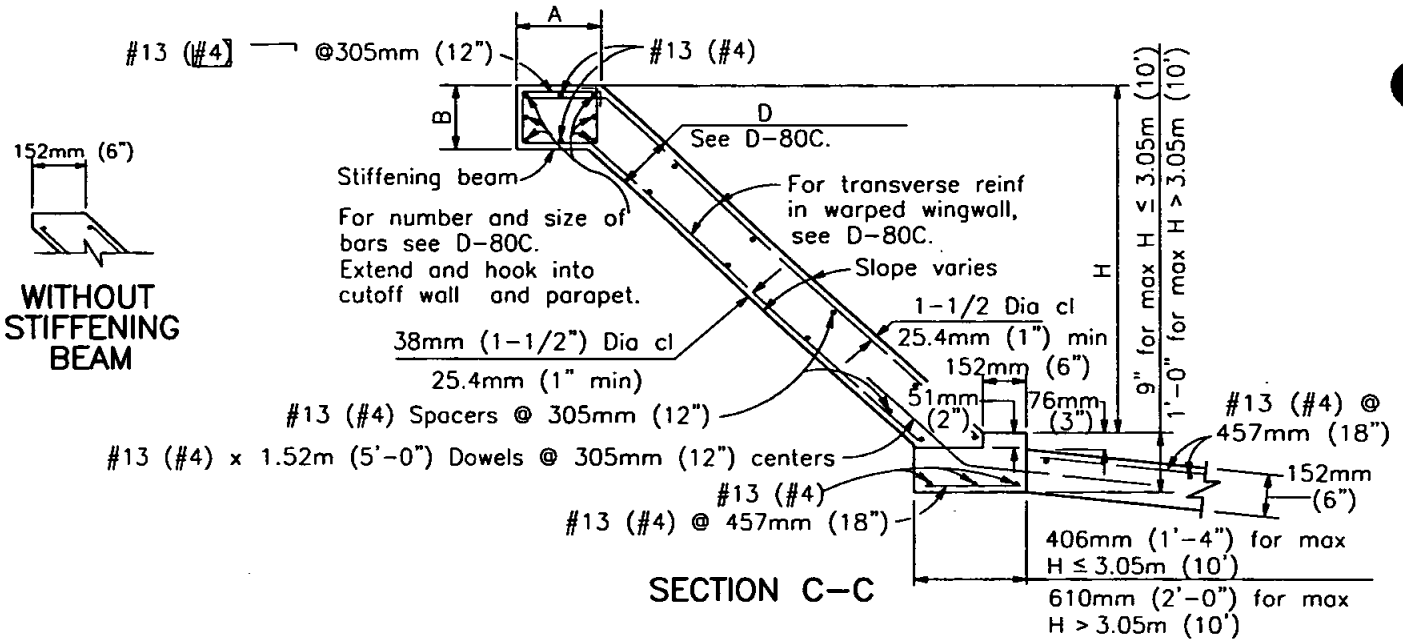

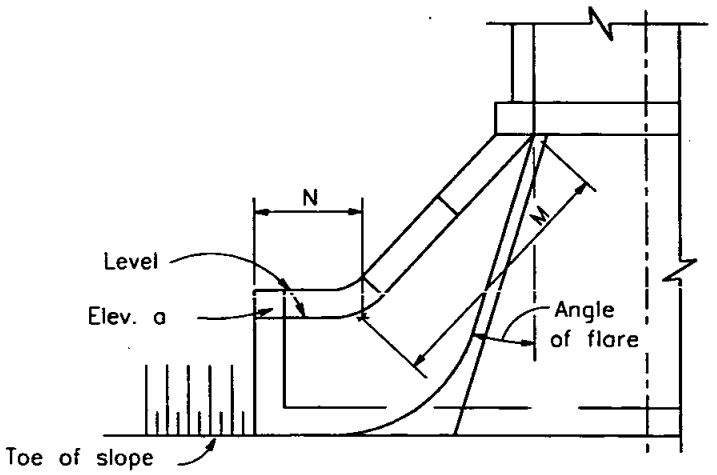

ALTERNATIVE WARPED WINGWALL

Use where additional protection to toe of embankment is required.

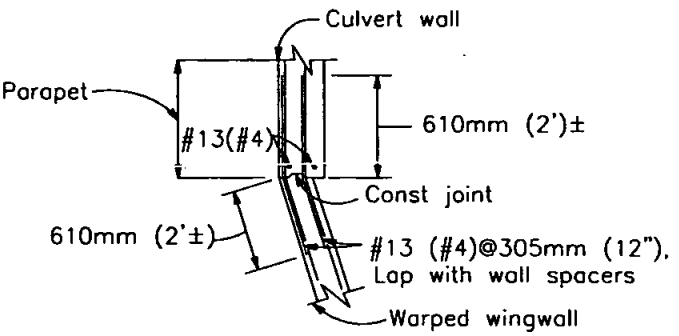

SECTION B-B

NOTES:

1. Walls designed for 610mm (2') surcharge; earth density = 3.40 cu m (120 #/cu. ft.); equivalent fluid pressure = 1.0 cu m (36 #/cu. ft.)
2. Vary D of warped wall uniformly from that at cutoff wall to that at culvert, for maximum H > 3.66m (12').
3. Where abrasion is anticipated increase apron thickness to 178mm (7") minimum to provide 51mm (2") minimum reinforcement coverage.
4. Dimensions L, W, H, M, N, Elevation a, Angle of flare, and end Slope (as apply) are shown on the plans.
5. Concrete shall be 332 kg/M^3-C-22Mpa (560-C-3250).

Revision	By	Approved	Date
ORIGINAL		A.Kercheval	12/75
Add Metric		T. Stanton	03/03
Reviewed		T. Stanton	04/06

SAN DIEGO REGIONAL STANDARD DRAWING

BOX CULVERT WARPED WINGWALL DETAILS No. 2

RECOMMENDED BY THE SAN DIEGO REGIONAL STANDARDS COMMITTEE

T. Stanton 3/01/2003

Tim Stanton Chairperson R.C.E. 19246 Date

DRAWING NUMBER **D-80B**

Revision	By	Approved	Date
ORIGINAL		A.Kercheval	12/75
Add Metric		T. Stanton	03/03
Reviewed		T. Stanton	04/06

SAN DIEGO REGIONAL STANDARD DRAWING

BOX CULVERT WARPED WINGWALL

DETAILS No. 3

WARPED WINGWALLS – METRIC MEASUREMENT TABLE ONLY

WALL DIMENSIONS AND REINFORCING

Element Slope	H	2.44or less bar mm	3.05 bar mm	12' bar mm	14' bar mm	16' bar mm	18' bar mm	20' bar mm
1/4:1	Front face reinf	#13@305	#13@178	#16@178	#16@127	#19@152	#22@178	#22@152
	Rear face reinf	#13@305	#13@305	#13@305	#13@305	#13@305	#13@305	#13@305
3/4:1	Front face reinf	#13@305	#13@305	#13@305	#13@305	#13@254	#13@203	#13@152
	Rear face reinf	#13@305	#13@305	#13@305	#13@254	#13@178	#13@152	#16@203
1-1/4:1	Front face reinf	#13@305	#13@305	#13@305	#13@305	#13@305	#13@305	#13@305
	Rear face reinf	#13@203	#13@203	#13@127	#16@152	#19@178	#19@152	#22@152
D at Cutoff Wall		152	152	152	191	203	241	279
D at Culvert		152	152	152	203	241	279	330

STIFFENING BEAM DIMENSIONS AND REINFORCING

H max \ L	3.66m	4.27m	4.88m	5.49m	6.10m	7.62m	9.14m	10.7m	12.2m or more
1.83m	No beam. Place 2-#6 in each face along top of wall.								
2.44m									
3.05m				A= 305mm					
3.66m				B= 229mm					
4.27m	Total 6-#19					A= 457mm			
4.88m					B= 305mm			A=559mm	
5.49m				Total 6-#22			B=305mm		A=610mm
6.10m						Total 6-#8		B=457MM	
							Total 8-#29		

WARPED WINGWALLS – U.S. MEASUREMENT TABLE ONLY

WALL DIMENSIONS AND REINFORCING

Element Slope	H	8'or less	10'	12'	14'	16'	18'	20'
1/4:1	Front face reinf	#4@12	#4@ 7	#5@ 7	#5@ 5	#6@ 6	#7@ 7	#7@ 6
	Rear face reinf	#4@12	#4@12	#4@12	#4@12	#4@12	#4@12	#4@12
3/4:1	Front face reinf	#4@12	#4@12	#4@12	#4@12	#4@10	#4@ 8	#4@ 6
	Rear face reinf	#4@12	#4@12	#4@12	#4@10	#4@ 7	#4@ 6	#5@ 8
1-1/4:1	Front face reinf	#4@12	#4@12	#4@12	#4@12	#4@12	#4@12	#4@12
	Rear face reinf	#4@ 8	#4@ 8	#4@ 5	#5@ 6	#6@ 7	#6@ 6	#7@ 6
D at Cutoff Wall		6"	6"	6"	7-1/2"	8"	9-1/2"	11"
D at Culvert		6"	6"	6"	8"	9-1/2"	11"	1'-1"

STIFFENING BEAM DIMENSIONS AND REINFORCING

H max \ L	12'	14'	16'	18'	20'	25'	30'	35'	40' or more
6'	No beam. Place 2-#6 in each face along top of wall.								
8'									
10'				A= 1'-0"					
12'				B= 9"					
14'	Total 6-#6					A= 1'-6"			
16'					B= 1'-0"			A= 1'-10"	
18'				Total 6-#7			B=1'-0"		A=2'-0"
20'						Total 6-#8		B= 1'-6"	
							Total 8-#9		

RECOMMENDED BY THE SAN DIEGO REGIONAL STANDARDS COMMITTEE

T. Stanton 3/01/2003
Chairperson R.C.E. 19246 Date

DRAWING NUMBER **D-80C**

GENERAL NOTES

QUANTITIES: Quantities are for the sloped invert slab and do not include splices in the longitudinal bars, nor temperature reinforcement for exposed top culvert, nor concrete or reinforcement for parapets or cutoff walls

SPECIAL COVERAGE: Box standard plans are not to be used for culverts in a corrosive environment or where there is a severe abrasive flow condition

DESIGNATION: Show on plans as span x height–strength classification x length, thus 1.22m x 1.22m–A x 18.3m (4 x 4–A x 60'), followed by alternatives.

ALTERNATIVES: Invert will be sloped unless "Trapezoidal Invert", "Flat Invert" or "V Invert" is included in designation. Ends of culvert will be rounded unless "Square Ends" are designated. Parapets will be as shown unless "__ ft. parapet" is designated in plans. Such designations may be different for inlet and outlet ends.

REINF. PLACEMENT: Main Reinforcement is positioned transverse or, for curved culverts, radial when radial, reinforcing spacing is measured along ℄.

CONSTRUCTION NOTES

CONCRETE: Bottom slab & walls shall be class 332 kg/M^3 –B–22Mpa (560–B–3250). Top slab shall be class 332 kg/M^3 –C–22Mpa (560–C–3250).

EXPANSION JOINTS: Bottom Slab–No expansion joints shall be placed.
Top Slab and Walls–When cover is less than span length, place 13mm (1/2") expansion joint filler at 15.2m (50')± centers outside the paved roadway lanes and place bridge detail 3–2 at 9.14m (30')± centers under paved roadway lanes.
When cover is more than span

CONSTRUCTION LOADS: Not permitted until concrete has reached a strength of 20.7Mpa (3,000p.s.i.) or age of 28 days, whichever occurs first, and falsework plans have been submitted by the Contractor, to the Engineer, and approved.

CONSTRUCTION JOINTS: Temporary joints may be permitted if normal (or radial) to C of R.C.B. otherwise, the Contractor is to submit a proposal for consideration.

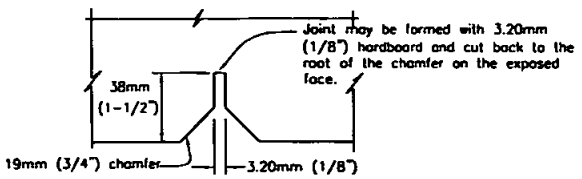

BRIDGE DETAIL 3–2
(Portion)
See Standard Drawing C–15

DESIGN NOTES

SPECIFICATIONS
DESIGN: AASHO, dated 1973, with revisions as supplemented by State of California Bridge Planning and Design Manual.

Sections designed for culvert in a trench on hard foundation, or culvert untrenched on yielding foundation, for culverts on piles or rock foundations, special design will be required.

LOADING
LIVE LOAD: For legal highway loads, use HS20–44 or Alternative with 30% impact for all cover depths, no impact on invert.

COVER LESS THAN 610mm (2') – Wheel load distribution on the top slab is E=0.175S+3.2' longitudinally and concentrated along the span. Wheel load distribution on the invert slab is 2.29m (7.5')longitudinally and uniformly over the breath of the culvert.

COVER 610mm (2') OR MORE – Wheel loads distributed uniformly over a square, the sides of which are 1.75 times the depth of cover, but not less longitudinally than E on the top slab, or 2.29m (7.5') on the invert slab when such areas from several wheel concentrations overlap, the total load shall be considered as uniformly distributed over the area defined by the outside limits of the individual areas, but the overall longitudinal dimension shall not exceed the total length of the supporting slab. Neglect live load, on single spans when cover is more than 2.44m (8') and exceeds span, and on multiple spans when cover exceeds distance between exterior walls.

DEAD LOAD: Earth load of 120 pcf and an equivalent fluid pressure of 36 pcf, reduced to 84 pcf and 25 pcf respectively for clear spans of 20' or less.

UNIT STRESSES: Fs = 138Mpa (20,000 psi), N = 10
Fc = 8.27Mpa (1,200 psi)

Reinforcement embedment is 38mm (1–1/2) dia. clear, min 25.4mm (1") and in 6.35mm (1/4") increments, except as noted.

Distribution "d" bars expressed as a percent of main positive reinforcement.

Classification "A" top slab $= \frac{100}{\sqrt{SPAN}}$, max 50%
(unless traffic longitudinal)

Classification "B" to "E": Top and bottom slabs
#13 (#4) @ 457mm (18") max.

USE OF STANDARD DRAWING

"Strength Classification, symbolized by the letters "A", "B", "C" etc., at the top of the data table is merely a convenient designation for a particular structural section for a culvert of any given opening it is dictated by the cover or depth of fill over the the top slab.

LIVE LOAD & R.C.B. TERMINOLOGY

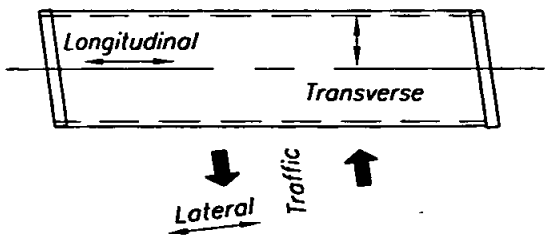

Revision	By	Approved	Date
ORIGINAL		Kerchevol	12/75
Add Metric		T. Stanton	03/03
Reviewed		T. Stanton	04/06

SAN DIEGO REGIONAL STANDARD DRAWING

BOX CULVERT
MISCELLANEOUS DETAILS No. 1

RECOMMENDED BY THE SAN DIEGO REGIONAL STANDARDS COMMITTEE
T. Stanton 3/10/2003
Chairperson R.C.E. 19246 Date

DRAWING NUMBER **D-81A**

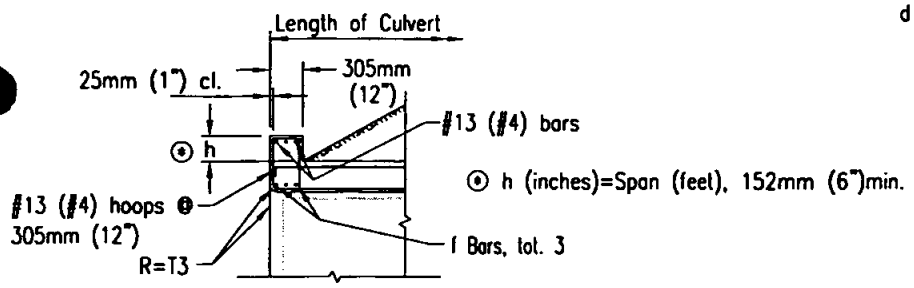

PART SECTION

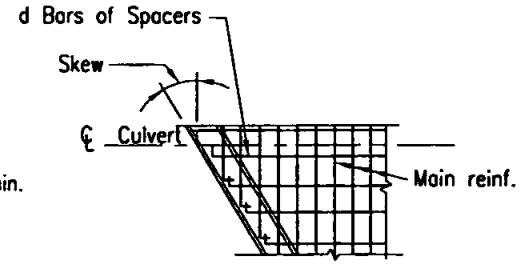

PART PLAN–SKEWED

PARAPET f BAR Nos.	SKEW ANGLE		
SPAN	0° TO 15°	16° TO 30°	31° TO 45°
1.22M (4')	#13 (#4)	#13 (#4)	#13 (#4)
1.83M (6')	#13 (#4)	#13 (#4)	#16 (#5)
2.44M (8')	#13 (#4)	#16 (#5)	#19 (#6)
3.05M (10')	#16 (#5)	#19 (#6)	#22 (#7)
3.66M (12')	#19 (#6)	#22 (#7)	#25 (#8)
4.27M (14')	#22 (#7)	#25 (#8)	#29 (#9)

PARAPET DETAILS FOR SINGLE SPAN CULVERTS

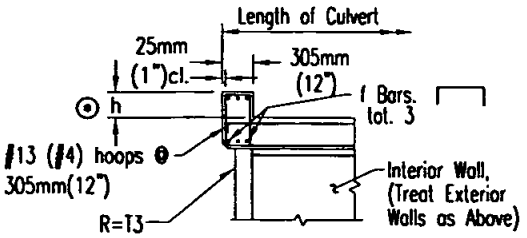

PART SECTION

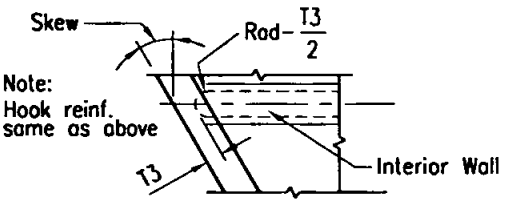

PART PLAN–SKEWED

PARAPET DETAILS FOR MULTIPLE SPAN CULVERTS

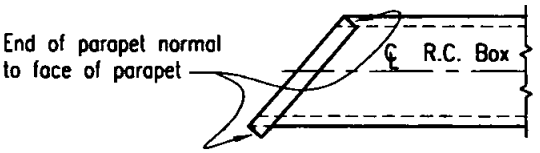

PAPAPET DETAIL FOR SKEWED CULVERTS W/O WINGWALLS

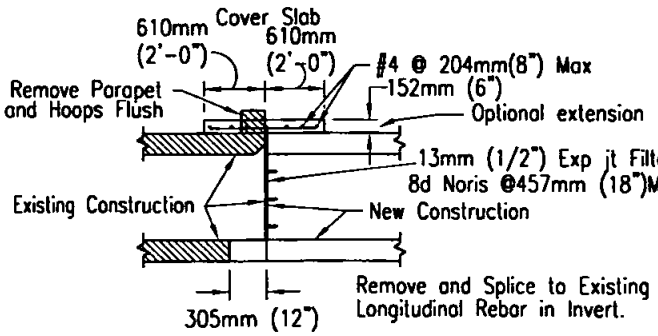

COVER: 305mm (1') AND GREATER

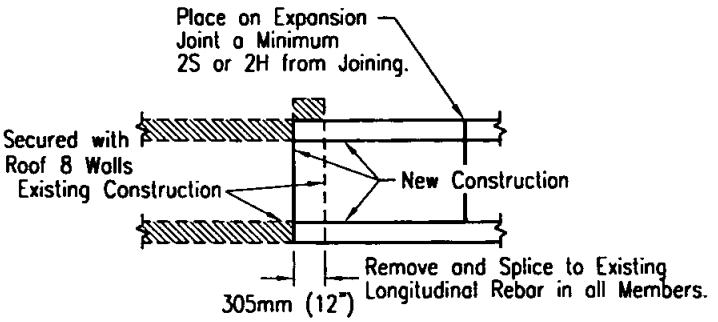

COVER: EXPOSED TOP AND GREATER

CULVERT EXTENSION

20° SKEW MAXIMUM

Revision	By	Approved	Date
ORIGINAL		Kercheval	12/75
Add Metric		T. Stanton	03/03
Reviewed		T. Stanton	04/06

SAN DIEGO REGIONAL STANDARD DRAWING

BOX CULVERT
MISCELLANEOUS DETAILS NO. 2

RECOMMENDED BY THE SAN DIEGO REGIONAL STANDARDS COMMITTEE

T. Stanton 3/10/2003

Chairperson R.C.E. 19246 Date

DRAWING NUMBER D-81B

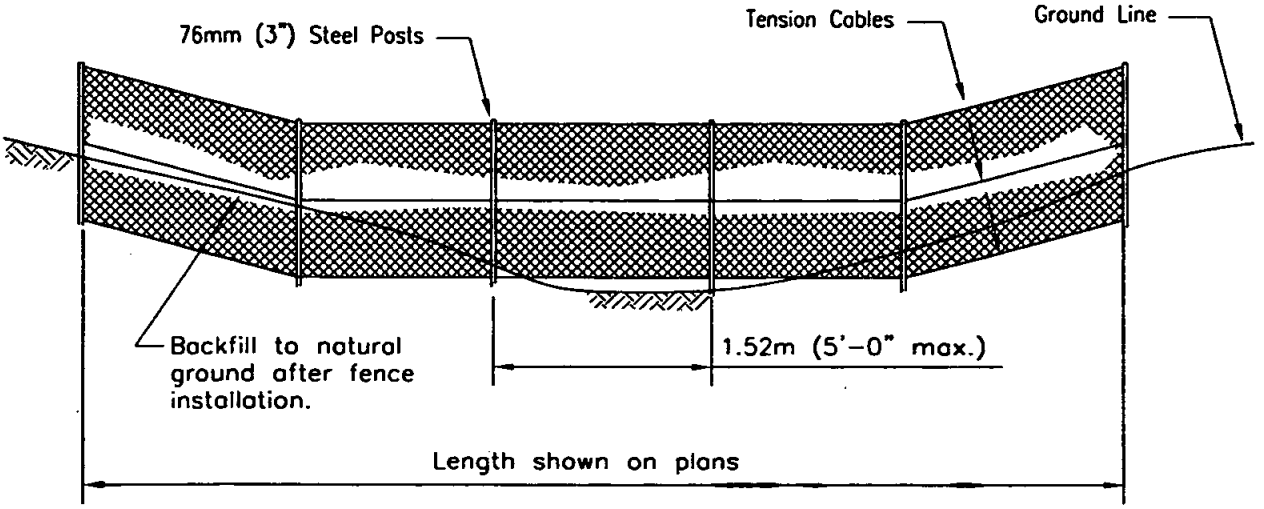

ELEVATION

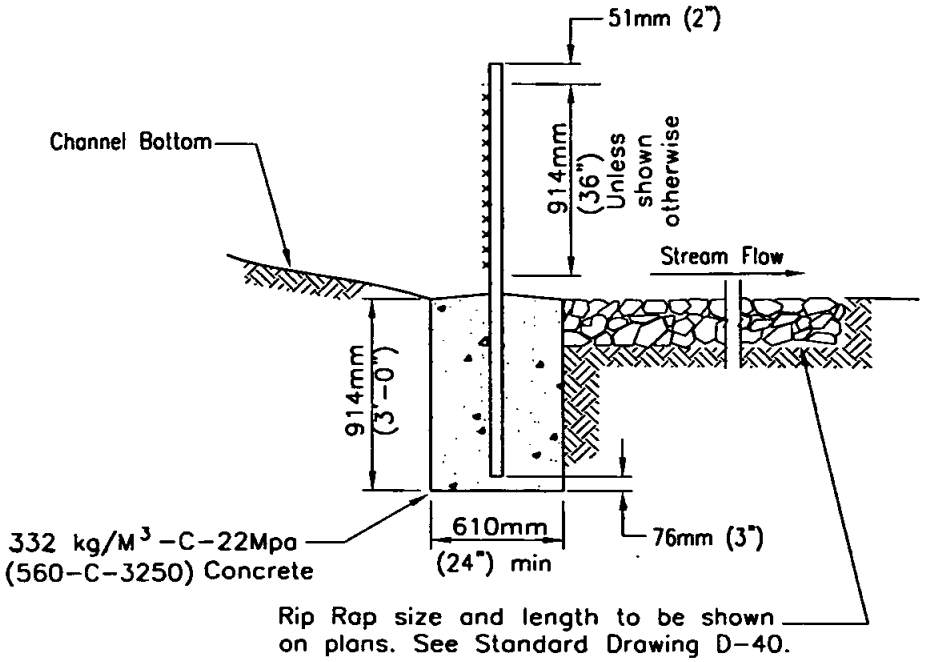

SECTION

NOTES:

1. Fence fabric shall be 51mm (2") mesh, 9 gage galvanized wire, chain link placed on the upstream side of the posts and tension cables.
2. Tension cable shall be 8mmø (5/16") steel at 457mm (18") c/c, secured at ends with cable clamps. Secure fence to cable with No. 12 galvanized steel wire looped at 152mm (6") c/c.
3. Posts shall be 76mmø (3") steel pipe, 2.63kg (5.79 lb/ft). Fill with mortar after placing.
4. Fence fabric shall be secured to posts with 9 gage wire clips at 229mm (9") c/c.

LEGEND ON PLANS

Revision	By	Approved	Date
ORIGINAL		H. Hecht	10/82
Add Metric		T. Stanton	03/03
Reviewed		T. Stanton	04/06

SAN DIEGO REGIONAL STANDARD DRAWING

DEBRIS FENCE

RECOMMENDED BY THE SAN DIEGO REGIONAL STANDARDS COMMITTEE

T. Stanton 3/10/2003

Chairperson R.C.E. 19246 Date

DRAWING NUMBER D-82

ELECTRICAL SYSTEMS

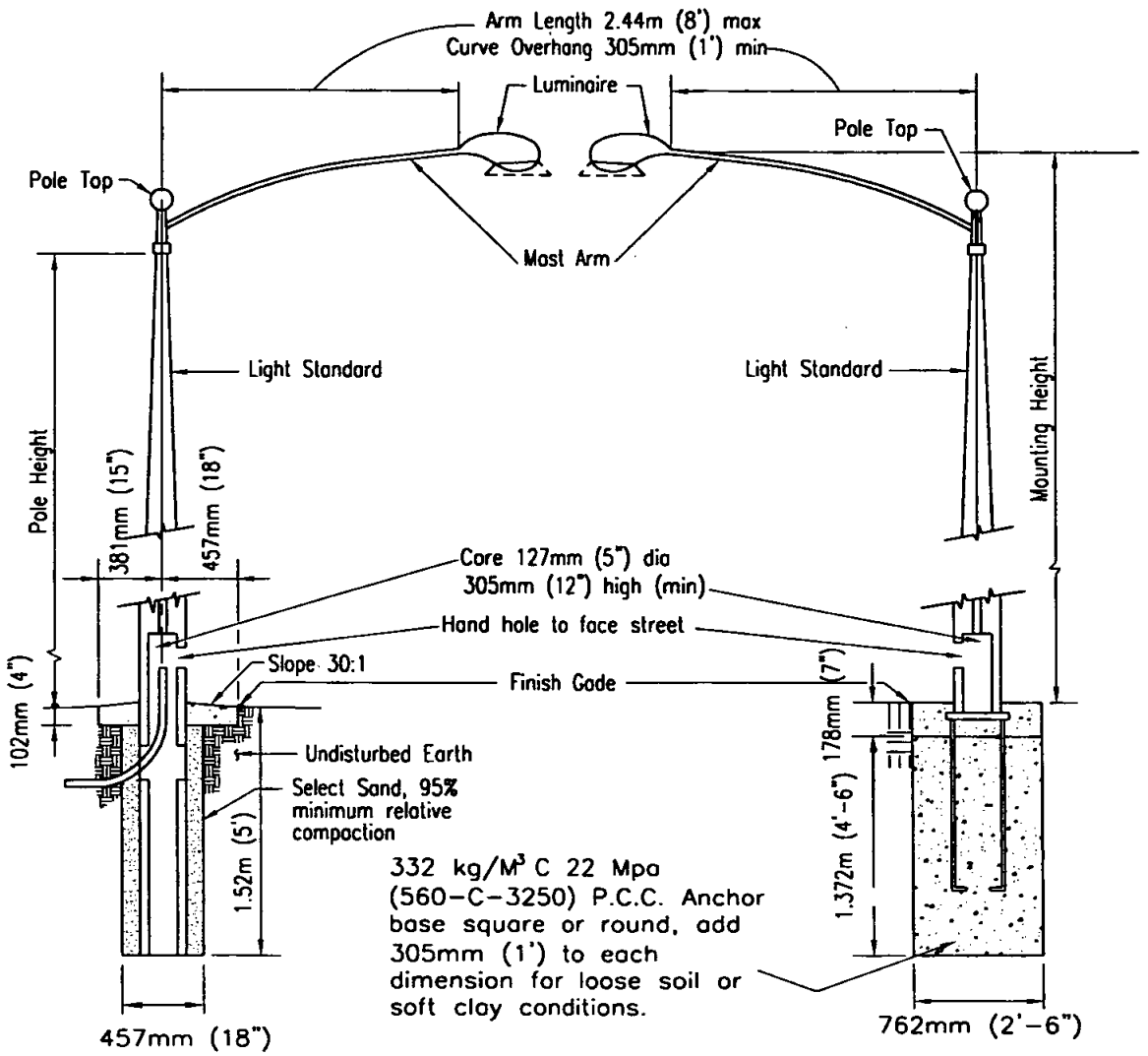

DIRECT BURIAL FOUNDATION

ANCHOR BASE FOUNDATION

POLE HEIGHT	MOUNTING HEIGHT	LAMP SIZE (WATTS)
7.62m ±610mm 25' ±2'	8.23m ±305mm 27' ±1'	170 M.V. 100 H.P.S. 90 L.P.S.
8.53m ±610mm 28' ±2'	9.14m ±305mm 30' ±1'	400 M.V. 250 H.P.S. 180 L.P.S.
7m 23' -0"	8.15m 26' -9"	70 H.P.S.
8.1m 26' -6"	9.14m 30' -0"	150 H.P.S.

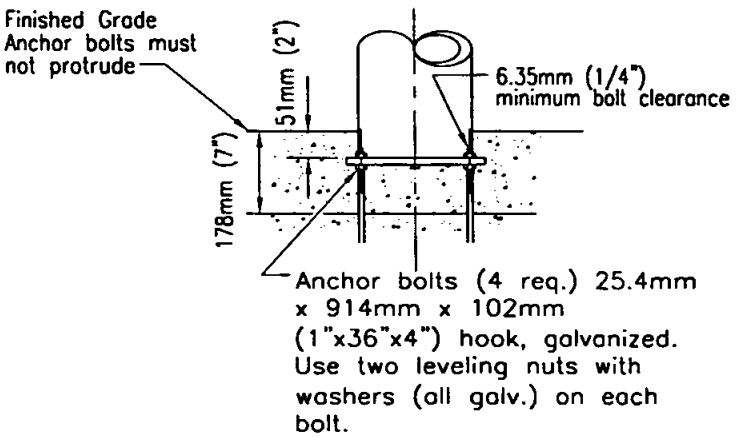

Revision	By	Approved	Date
ORIGINAL		Kercheval	12/75
Add Table		M. Bahmanian	05/86
Add Metric		T. Stanton	03/03
Reviewed		T. Stanton	04/06

SAN DIEGO REGIONAL STANDARD DRAWING

STREET LIGHTING STANDARD

RECOMMENDED BY THE SAN DIEGO REGIONAL STANDARDS COMMITTEE

T. Stanton 3/01/2003

Chairperson R.C.E. 19246 Date

DRAWING NUMBER **E-1**

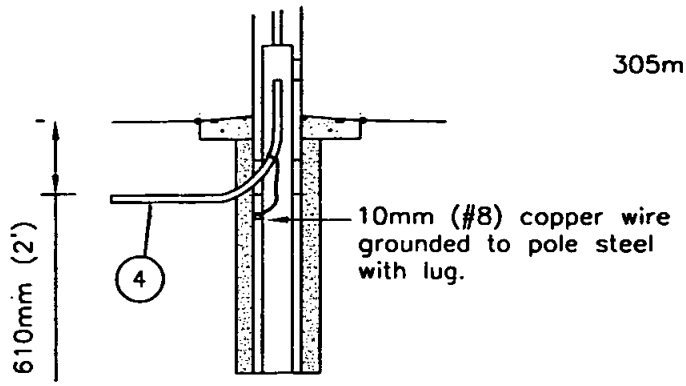

STEEL CONDUIT

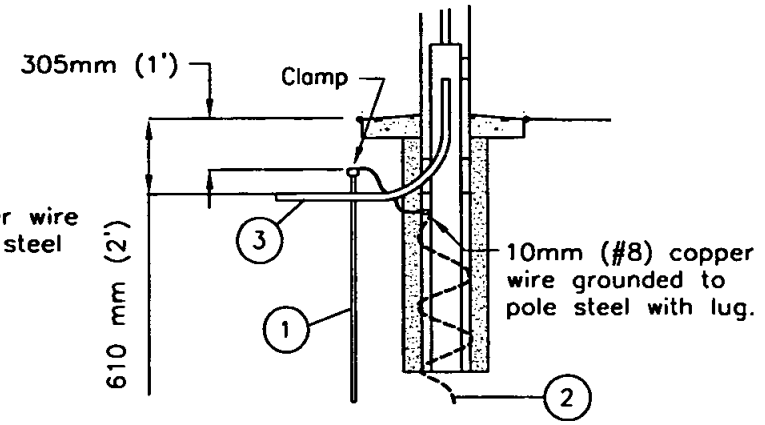

NON-METALLIC CONDUIT

DIRECT BURIAL FOUNDATION

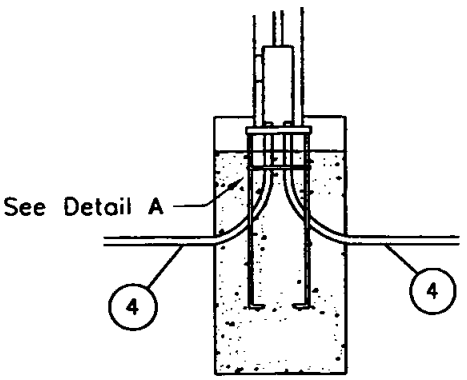

STEEL CONDUIT

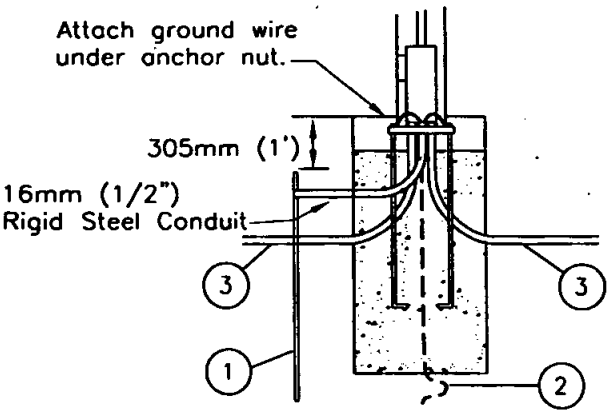

NON-METALLIC CONDUIT

ANCHOR BASE FOUNDATION

1. 19mm x 2.4m (3/4" x 8') copper covered steel ground rod.
2. Alternate Ground: 4.57m (15') 35mm (no. 4) stranded copper wire, coiled.
3. Approved non-metallic conduit.
4. Steel conduit.

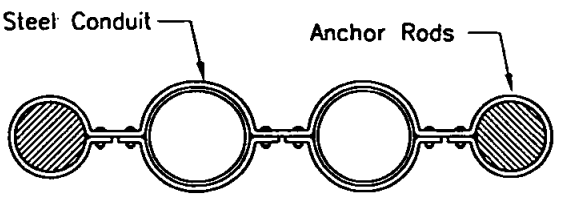

DETAIL A

Revision	By	Approved	Date
ORIGINAL		Kercheval	12/75
Add Metric		T. Stanton	03/03
Reformatted		T. Stanton	04/06

SAN DIEGO REGIONAL STANDARD DRAWING

GROUNDING OF CONCRETE LIGHTING STANDARDS

RECOMMENDED BY THE SAN DIEGO REGIONAL STANDARDS COMMITTEE

T. Stanton 3/10/2003

Chairperson R.C.E. 19246 Date

DRAWING NUMBER **E-2**

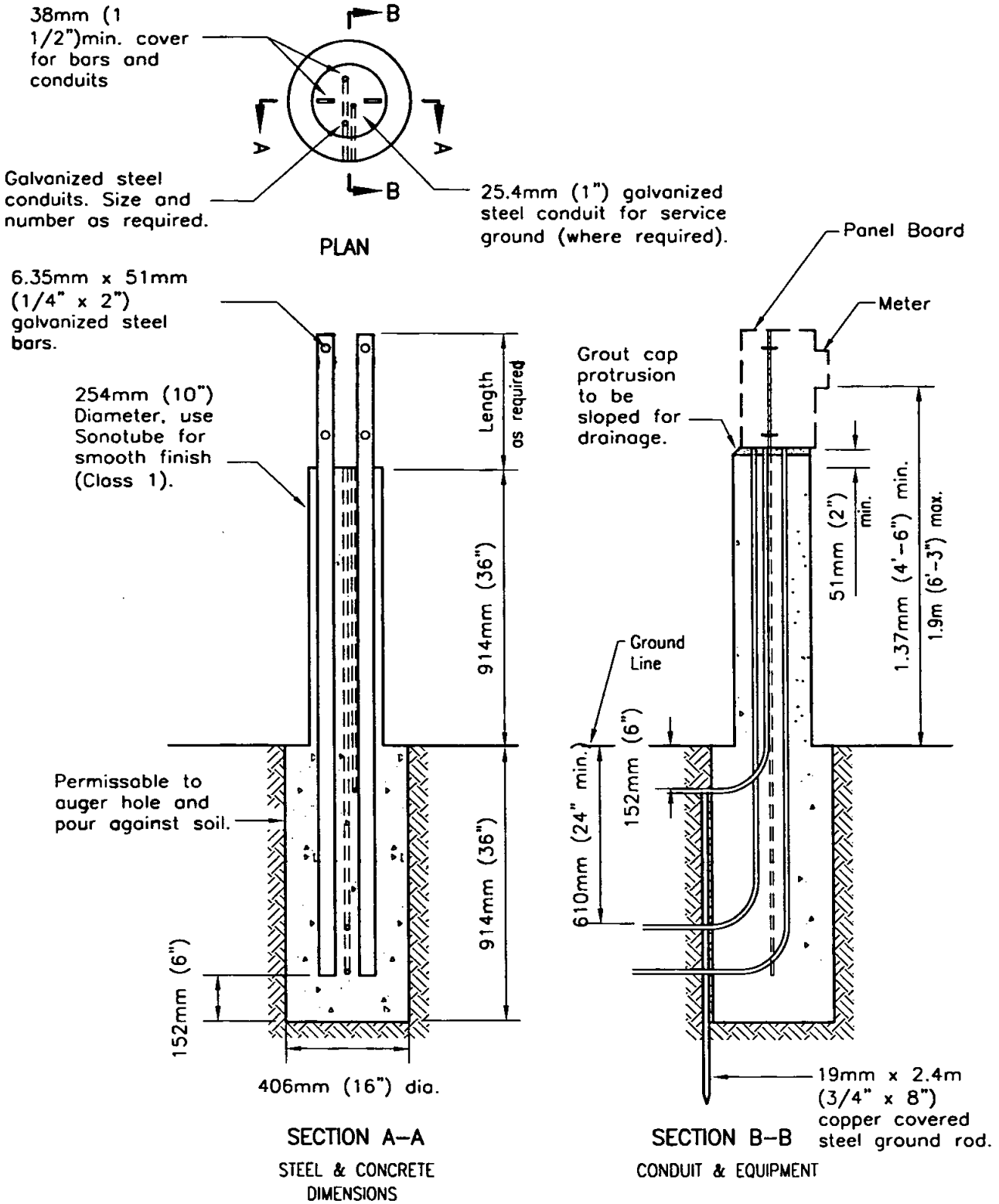

NOTE: Concrete shall be class 332 kg/M^3 C 22 Mpa (560–C–3250)

Revision	By	Approved	Date
ORIGINAL		Kercheval	12/75
Add Metric		T. Stanton	03/03
Reviewed		T. Stanton	04/06

SAN DIEGO REGIONAL STANDARD DRAWING

PEDESTAL FOR ELECTRICAL EQUIPMENT

RECOMMENDED BY THE SAN DIEGO REGIONAL STANDARDS COMMITTEE

T. Stanton 3/01/2003

Chairperson R.C.E. 19246 Date

DRAWING NUMBER **E-33**

GENERAL SURFACE IMPROVEMENTS

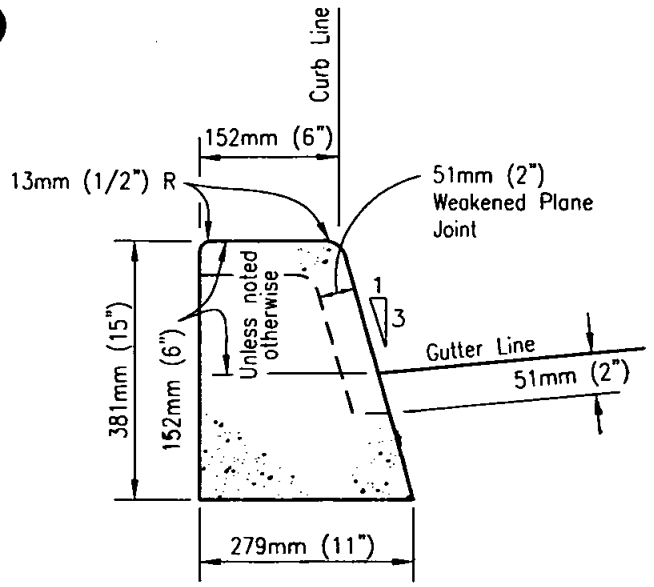

152mm (6") CURB

Area=0.083m (0.89 Sq. Ft.)

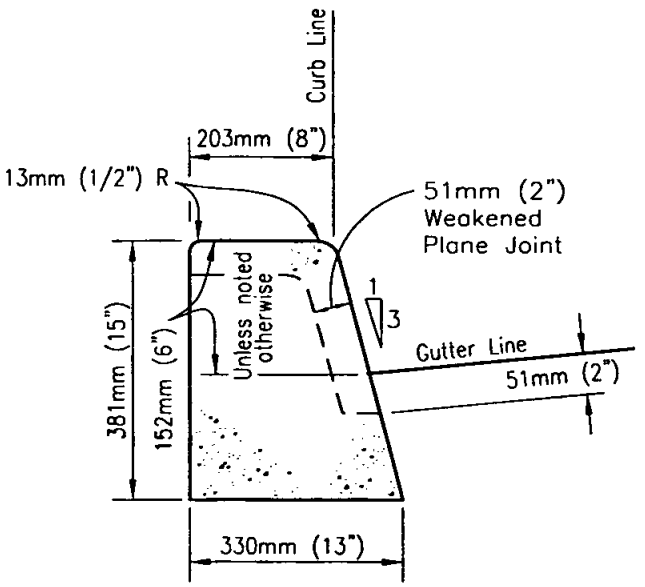

203mm (8") CURB

Area=0.1m (1.09 Sq. Ft.)

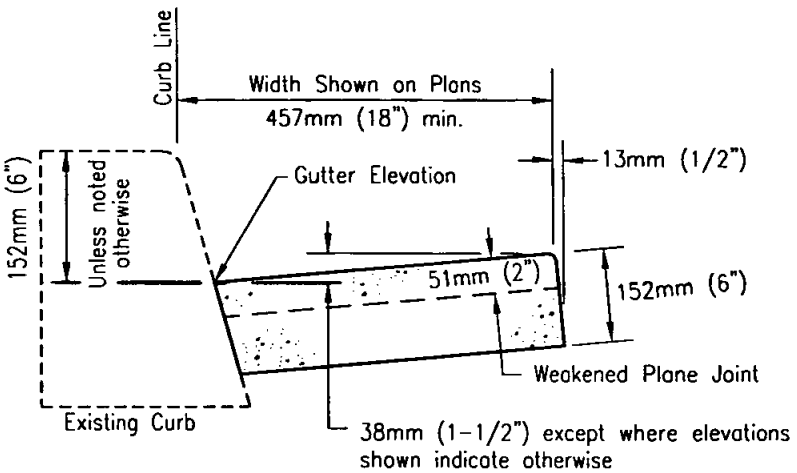

GUTTER

NOTES:

1. Concrete shall be 308kg/M^3-C-17-MPa (520-C-2500).
2. See Standard Drawings G-9 and G-10 for joint details.
3. Slope top of curb 6.35mm (1/4") per foot toward street.

LEGEND ON PLANS

152mm (6") curb

Revision	By	Approved	Date
ORIGINAL		Kercheval	12/75
Add Metric		T. Stanton	03/03
Reformatted		T. Stanton	04/06

SAN DIEGO REGIONAL STANDARD DRAWING

CURBS AND GUTTER - SEPARATE

RECOMMENDED BY THE SAN DIEGO REGIONAL STANDARDS COMMITTEE

T. Stanton 3/10/2003

Chairperson R.C.E. 19246 Date

DRAWING NUMBER **G-1**

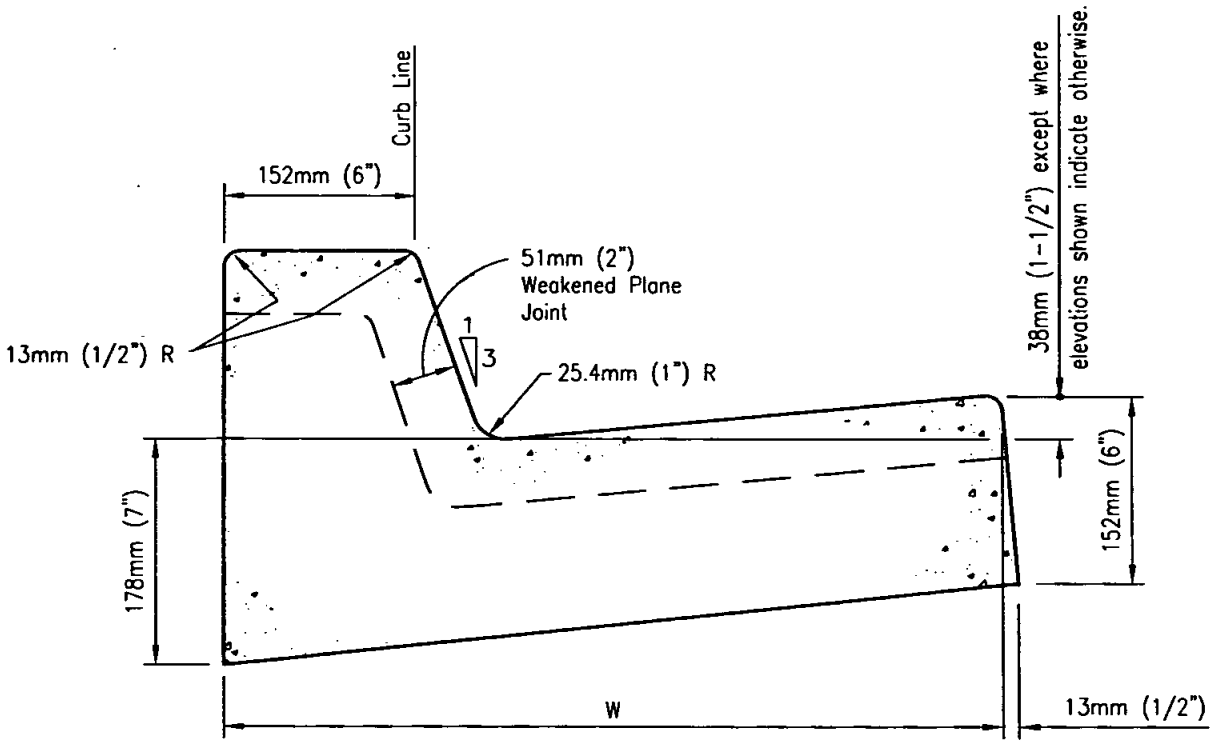

TYPE	W	*AREA
G	610mm (24")	0.124sq. m (1.34sq ft.)
H	762mm (30")	0.150sq. m (1.61sq ft.)

* with 152mm (6") Curb Face

NOTES:

1. Concrete shall be 308kg/M^3-C-17-MPa (520-C-2500).
2. See Standard Drawings G-9 and G-10 for joint details.
3. Slope top of curb 6.35mm (1/4") per foot toward street.

LEGEND ON PLANS

Revision	By	Approved	Date
ORIGINAL		Kercheval	12/75
Add Metric		T. Stanton	03/03
Reformatted		T. Stanton	04/06

SAN DIEGO REGIONAL STANDARD DRAWING

CURB AND GUTTER - COMBINED

RECOMMENDED BY THE SAN DIEGO REGIONAL STANDARDS COMMITTEE

T. Stanton 3/01/2003

Chairperson R.C.E. 19246 Date

DRAWING NUMBER **G-2**

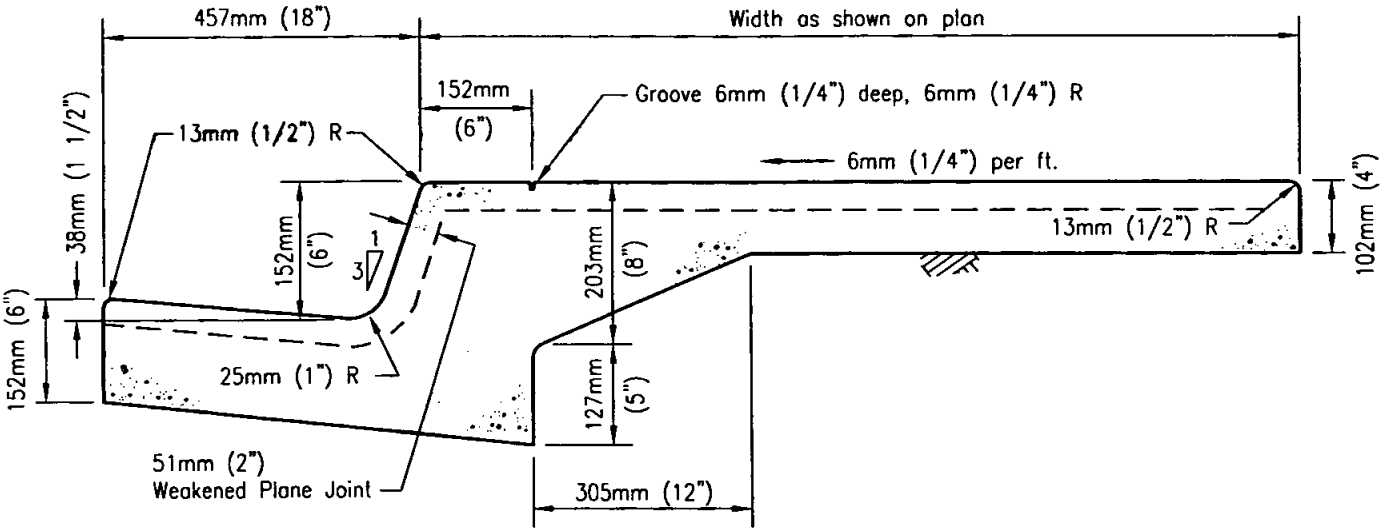

NOTES:

1. Concrete shall be 308kg/M^3-C-17-MPa (520-C-2500).
2. See Standard Drawings G-9 and G-10 for joint details.
3. Monolithic curb, gutter and sidewalk is to be used with Agency approval only.

LEGEND ON PLANS

Revision	By	Approved	Date
ORIGINAL		Kercheval	12/75
Add Metric		T. Stanton	03/03
Reformatted		T. Stanton	04/06

SAN DIEGO REGIONAL STANDARD DRAWING

MONOLITHIC CURB, GUTTER AND SIDEWALK

RECOMMENDED BY THE SAN DIEGO REGIONAL STANDARDS COMMITTEE

T. Stanton 3/10/2003

Chairperson R.C.E. 19246 Date

DRAWING NUMBER **G-3**

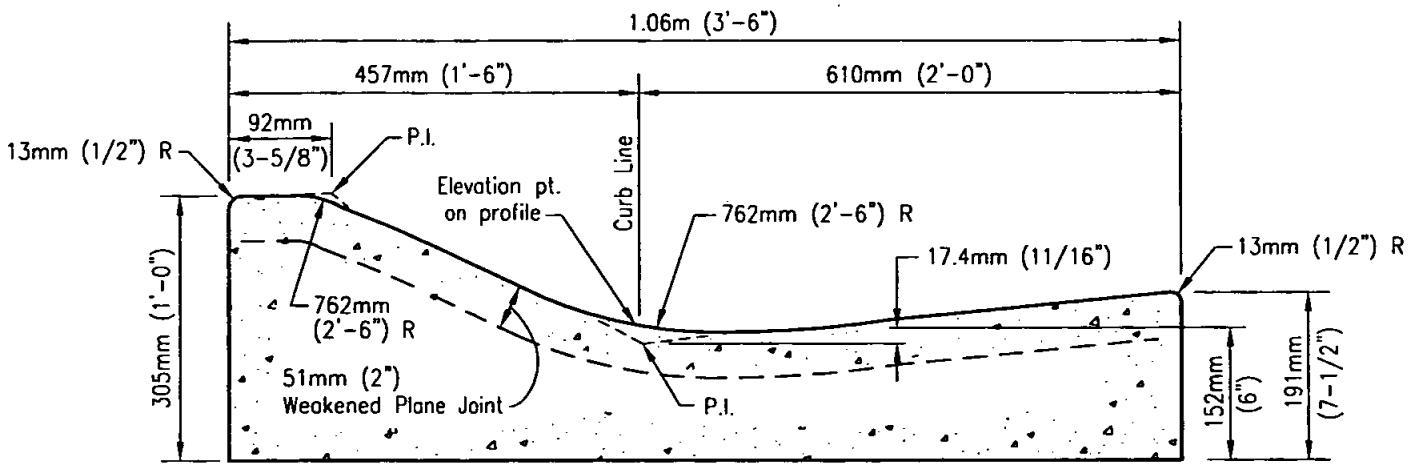

TYPE A
CURB AREA
(0.21 sq. m (2.23 sq. ft.))

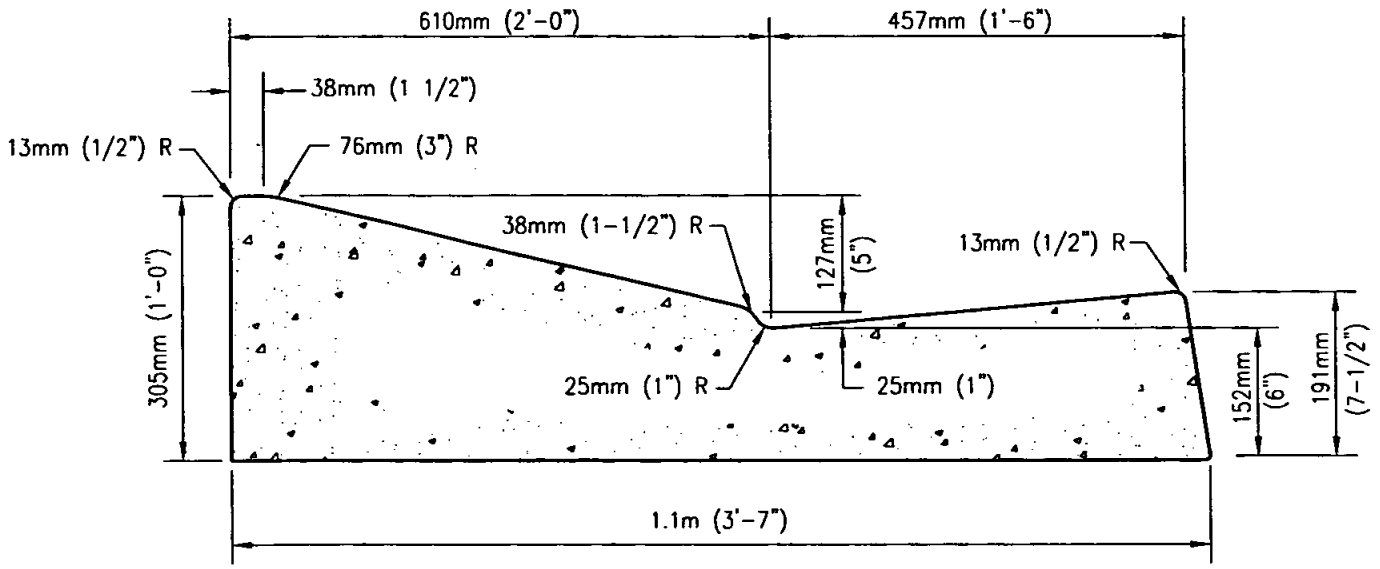

TYPE B
CURB AREA
(0.23 sq. m (2.48 sq. ft.))

NOTES:

1. Transition to type G curb at all curb returns, except where sidewalk ramps are provided, and at all cul-de-sacs with drainage structures.
2. Concrete shall be 308kg/M^3-C-17-MPa (520-C-2500).
3. See Standard Drawings G-9 and G-10 for joint details.

LEGEND ON PLANS

Revision	By	Approved	Date
ORIGINAL		Kercheval	12/75
Add Metric		T. Stanton	03/03
Reformatted		T. Stanton	04/06

SAN DIEGO REGIONAL STANDARD DRAWING

CURB AND GUTTER - ROLLED

RECOMMENDED BY THE SAN DIEGO REGIONAL STANDARDS COMMITTEE

T. Stanton 3/01/2003

Chairperson R.C.E. 19246 Date

DRAWING NUMBER **G-4**

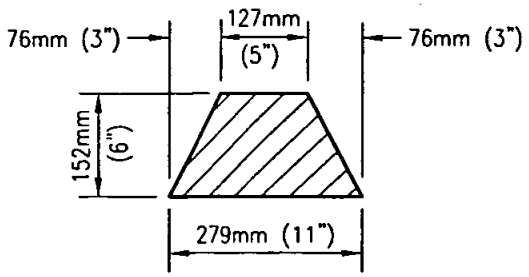

TYPE A

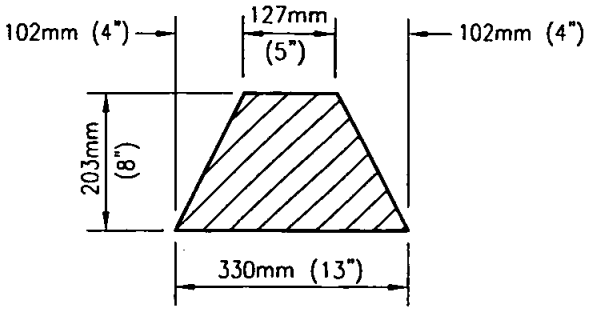

TYPE B

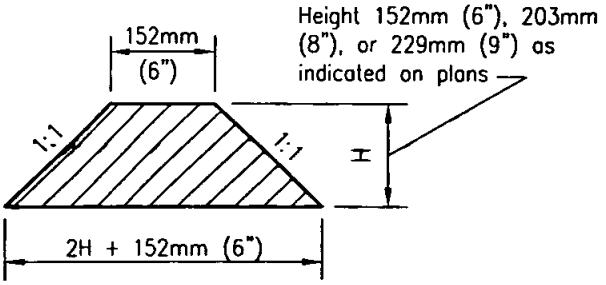

TYPE C

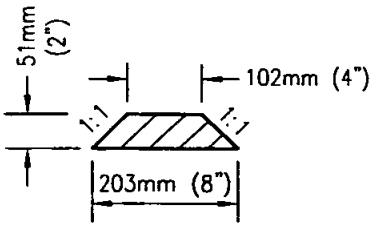

TYPE D

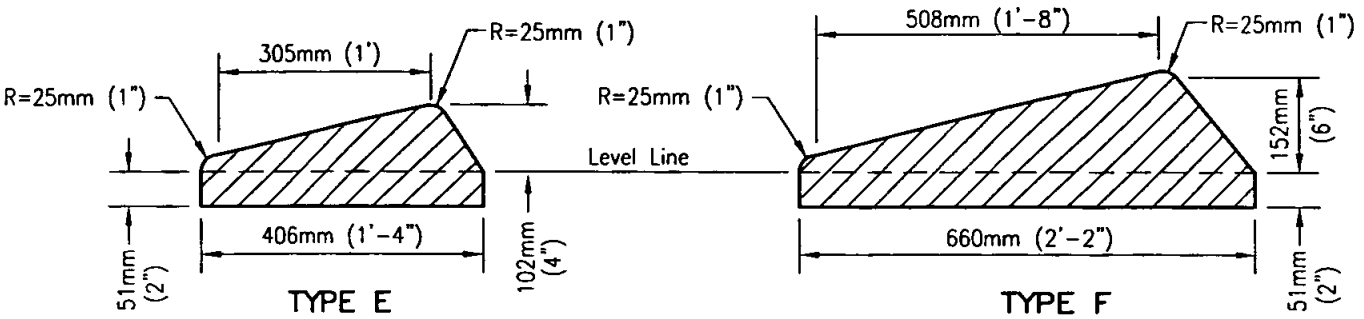

TYPE E

TYPE F

MOUNTABLE DIKES

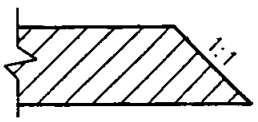

Slope end of dike 1:1 when not joining other improvements

ALL TYPES – SIDE VIEW

APPROX. DIKE QUANTITIES		
TYPE	REQD PER LIN. FT.	
A	25.4kg	(0.0250 tn.)
B	38.1kg	(0.0375 tn.)
C-152mm (6")	38.1kg	(0.0375 tn.)
C-203mm (8")	59.2kg	(0.0583 tn.)
C-229mm (9")	71.3kg	(0.0702 tn.)
D	6.3kg	(0.0062 tn.)
E	41.4kg	(0.0407 tn.)
F	63.3kg	(0.0623 tn.)

NOTES:

1. Dikes shall be placed on a 51mm (2") of A.C. surfacing, extending throughout the width of the dike.
2. PG-70-10 grade asphalt to be used for all dikes.
3. A.C. dikes may be shaped and compacted with an extrusion machine or other equipment capable of shaping and compacting the material to the required cross section.

Revision	By	Approved	Date
ORIGINAL		Kercheval	12/75
Add Metric		T. Stanton	03/03
Reformatted		T. Stanton	04/06

SAN DIEGO REGIONAL STANDARD DRAWING

DIKES - ASPHALT CONCRETE

RECOMMENDED BY THE SAN DIEGO REGIONAL STANDARDS COMMITTEE

T. Stanton 3/10/2003

Chairperson R.C.E. 19246 Date

DRAWING NUMBER G-5

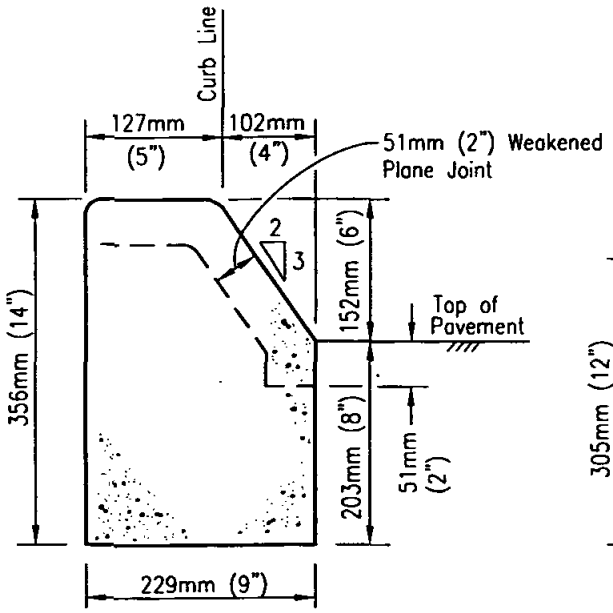

B–1
Area=0.073 sq. m (0.79 Sq.Ft.)

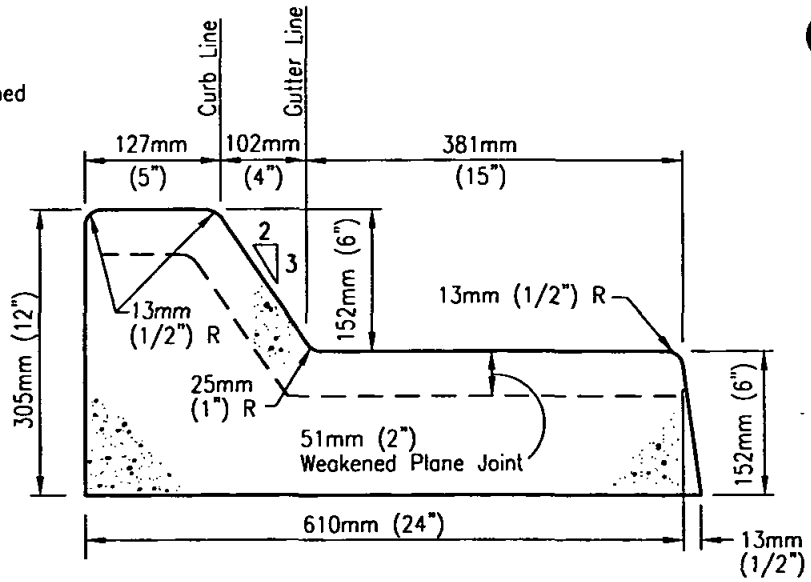

B–2
Area=0.120 sq. m (1.29 Sq.Ft.)

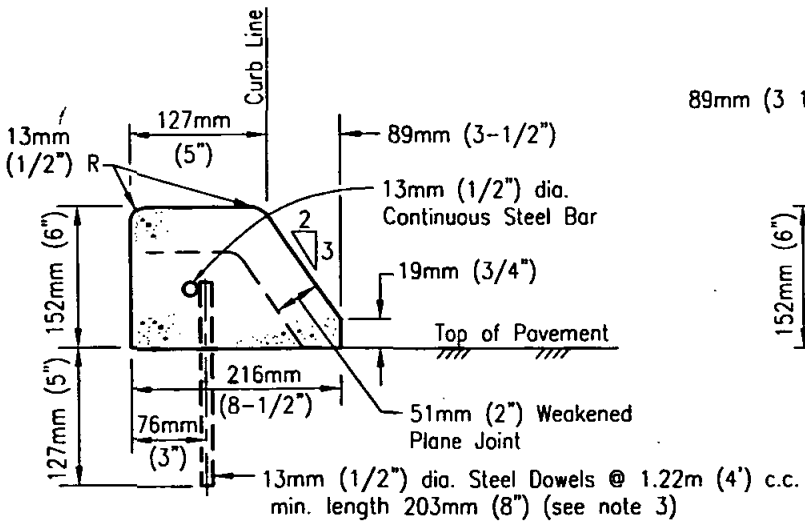

B–3
Area=0.027 sq. m (0.29 Sq.Ft.)

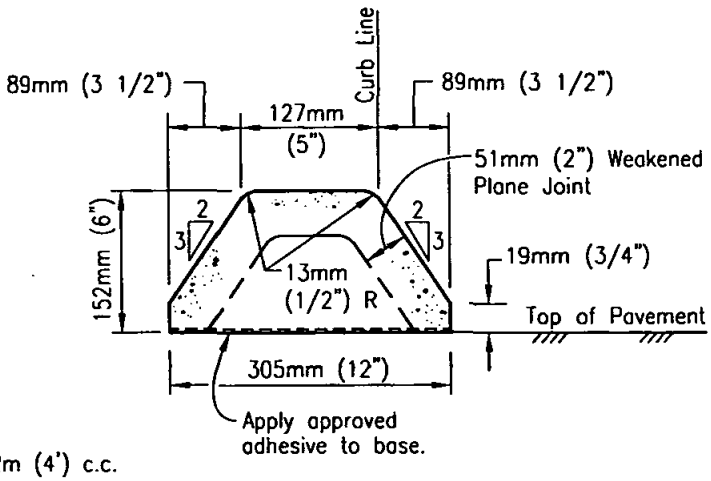

B–4
Area=0.033 sq. m (0.35 Sq.Ft.)

NOTES:

1. Concrete shall be 308kg/m^3-C-17-MPa (520-C-2500).
2. See Standard Drawings G-9 and G-10 for joint details.
3. Extruded type B-3 curb shall be anchored to existing pavement by placing steel dowels and reinforcing steel as shown or by using an approved adhesive.

LEGEND ON PLANS

Type B-2 Curb and Gutter

Type B-1, B-3, B-4 Curb

Revision	By	Approved	Date
ORIGINAL		Kerchevol	12/75
Add Metric		T. Stanton	03/03
Reformatted		T. Stanton	04/06

SAN DIEGO REGIONAL STANDARD DRAWING

CURBS AND GUTTER - MEDIANS

RECOMMENDED BY THE SAN DIEGO REGIONAL STANDARDS COMMITTEE

T. Stanton 3/01/2003

Chairperson R.C.E. 19246 Date

DRAWING NUMBER **G-6**

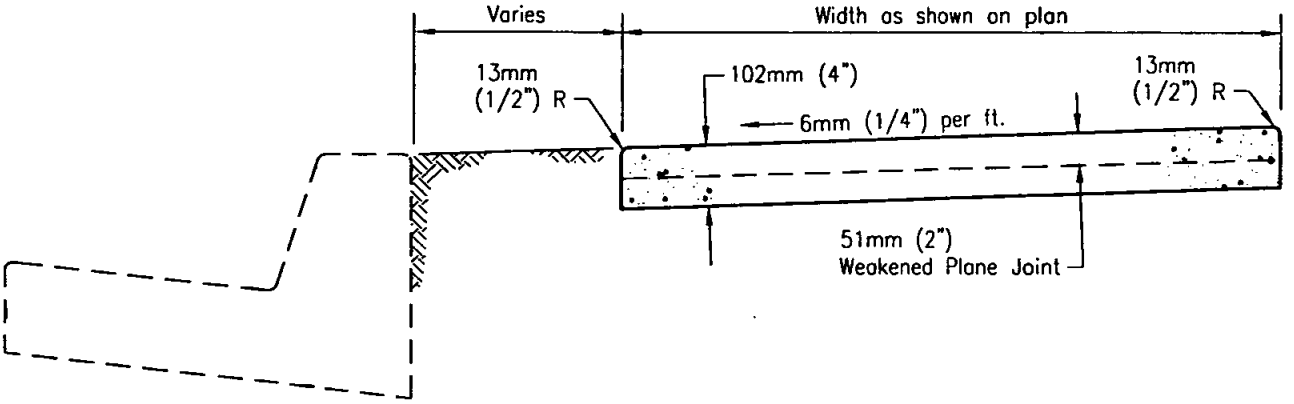

NON–CONTIGUOUS

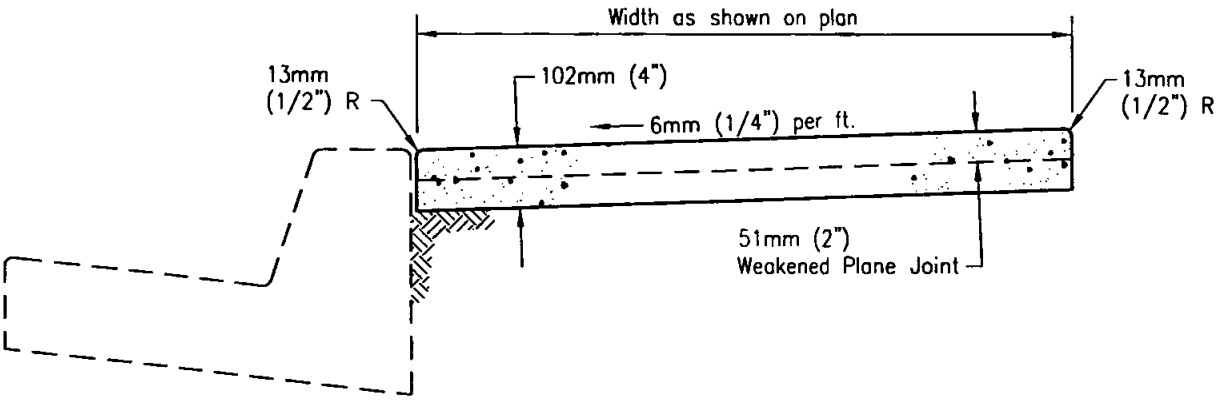

CONTIGUOUS

NOTES:

1. Concrete shall be 308kg/M^3–C–17–MPa (520–C–2500).
2. See Standard Drawings G–9 and G–10 for joint details.

LEGEND ON PLANS

Revision	By	Approved	Date
ORIGINAL		Kercheval	12/75
Add Metric		T. Stanton	03/03
Reformatted		T. Stanton	04/06

SAN DIEGO REGIONAL STANDARD DRAWING

SIDEWALK - TYPICAL SECTIONS

RECOMMENDED BY THE SAN DIEGO REGIONAL STANDARDS COMMITTEE

T. Stanton 3/10/2003

Chairperson R.C.E. 19246 Date

DRAWING NUMBER **G-7**

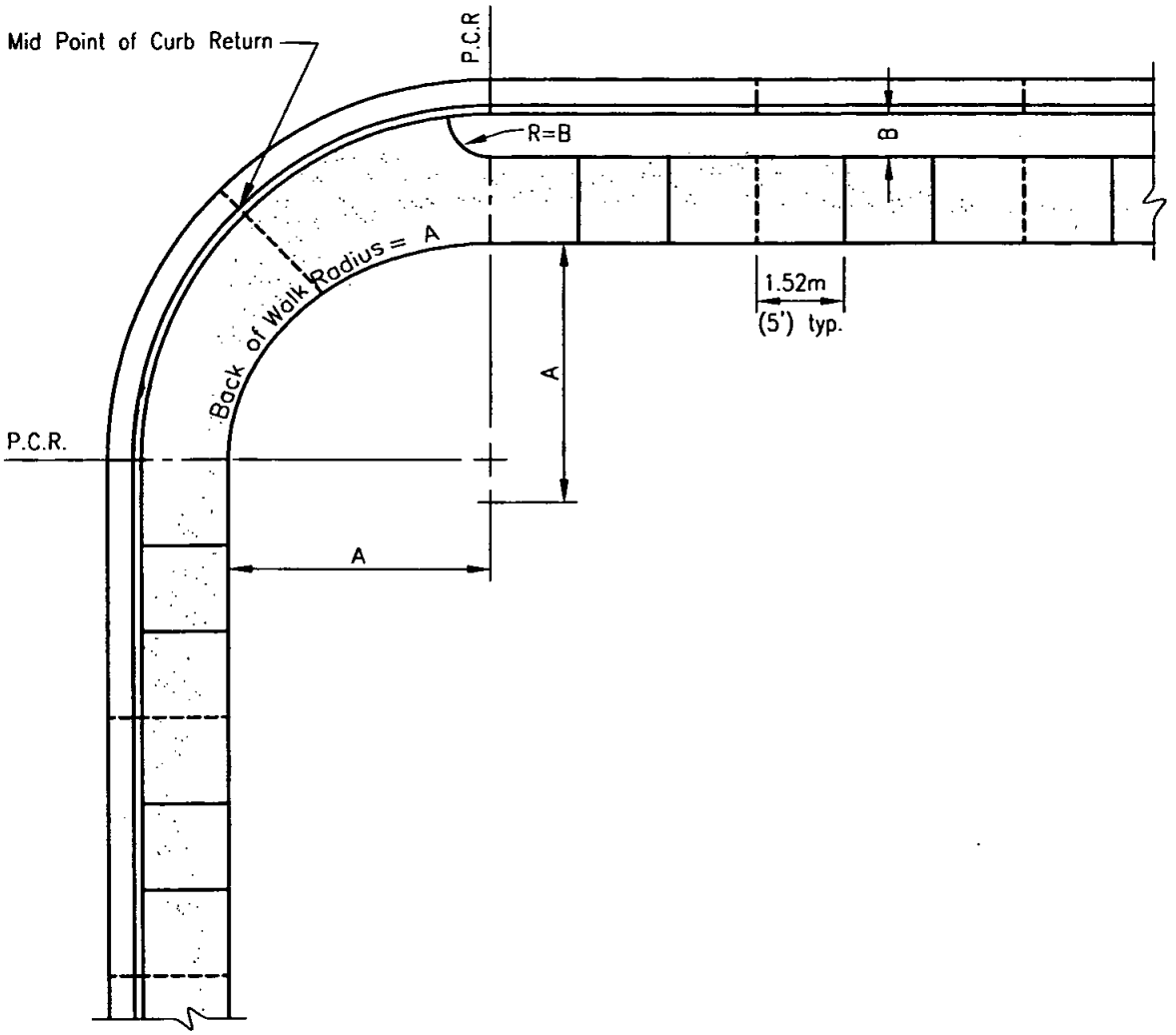

NOTES:

1. Expansion joints — - — at curb returns, adjacent to structures and at 13.7m (45') intervals. (See Standard Drawing G-10).

2. Weakened Plane Joints ------ at mid point of curb return, when required, and at 4.57m (15') intervals from P.C.R.'s (See Standard Drawing G-10).

3. 6.35mm (1/4") grooves ——— with 6.35mm (1/4") radius edges at 1.52m (5') intervals.

Revision	By	Approved	Date
ORIGINAL		Kercheval	12/75
Add Metric		T. Stanton	03/03
Reformatted		T. Stanton	04/06

SAN DIEGO REGIONAL STANDARD DRAWING

SIDEWALK JOINT LOCATIONS

RECOMMENDED BY THE SAN DIEGO REGIONAL STANDARDS COMMITTEE

T. A. Stanton 3/10/2003

Chairperson R.C.E. 19246 Date

DRAWING NUMBER **G-9**

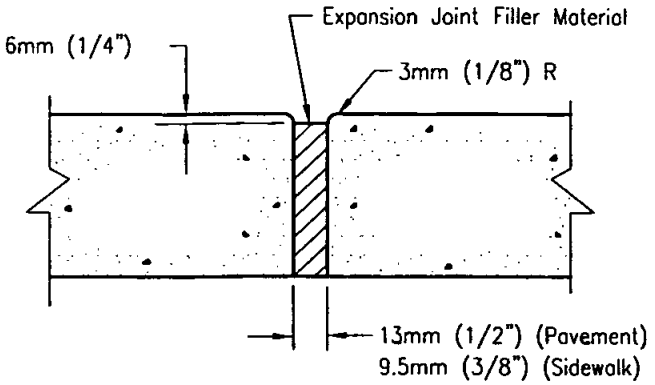

EXPANSION JOINT

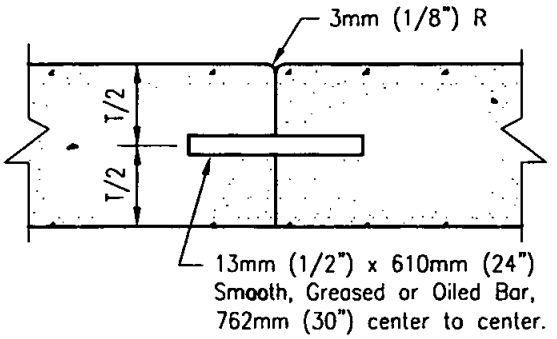

CONTACT JOINT

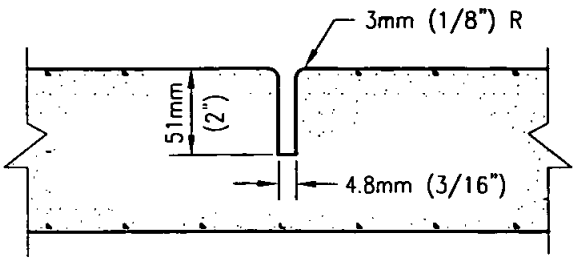

WEAKENED PLANE JOINT
CURB AND SIDEWALK

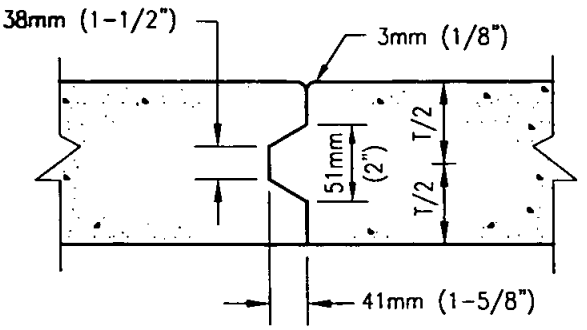

KEYED JOINT

Revision	By	Approved	Date
ORIGINAL		Parkinson	2/95
Add Metric		T. Stanton	03/03
Reformatted		T. Stanton	04/06

SAN DIEGO REGIONAL STANDARD DRAWING

CONCRETE JOINT DETAILS

RECOMMENDED BY THE SAN DIEGO REGIONAL STANDARDS COMMITTEE

T. Stanton 3/01/2003

Chairperson R.C.E. 19246 Date

DRAWING NUMBER G-10

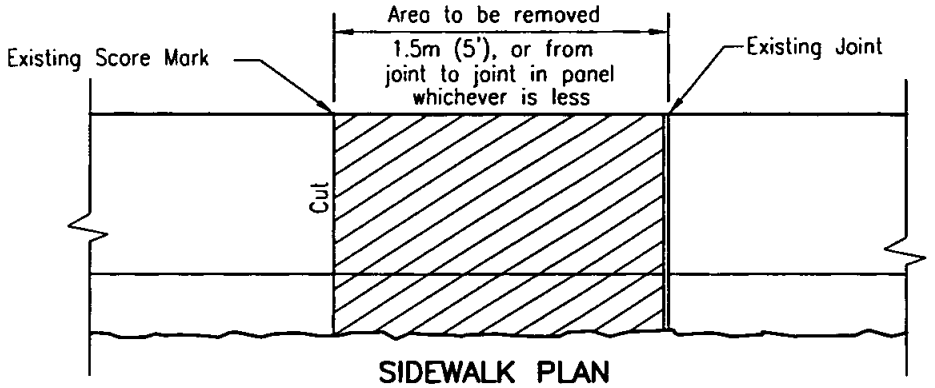

SIDEWALK PLAN

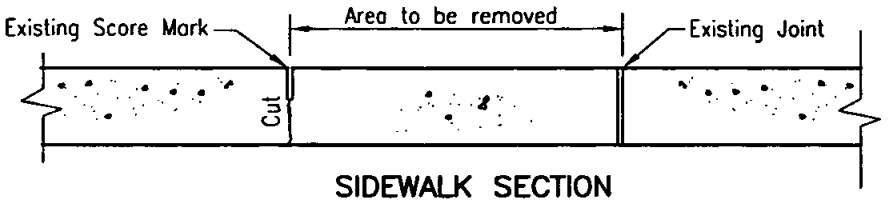

SIDEWALK SECTION

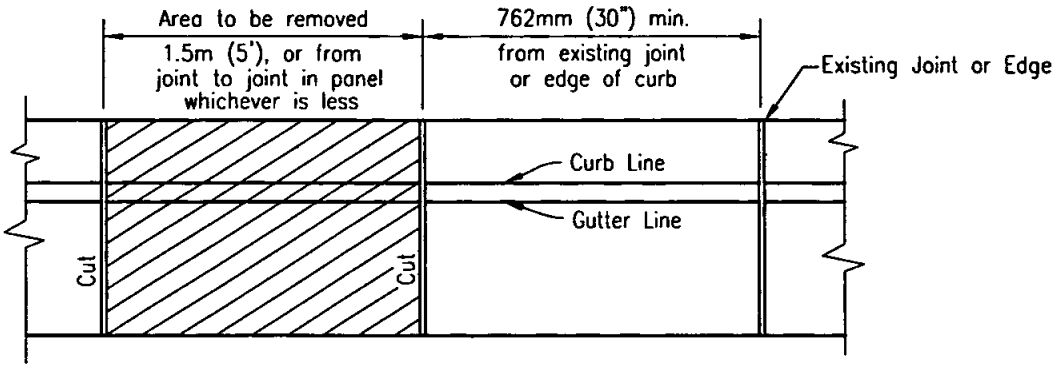

CURB PLAN

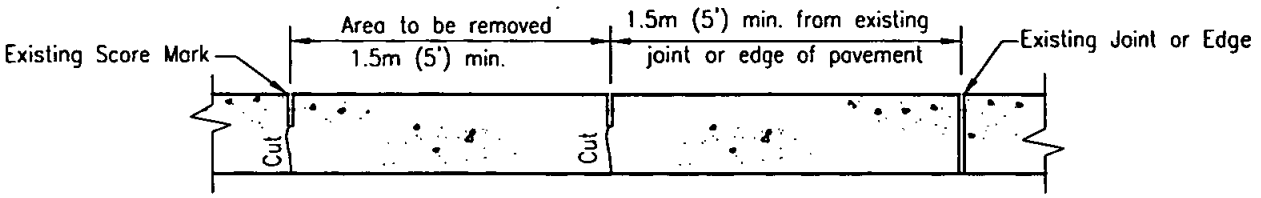

PAVEMENT SECTION

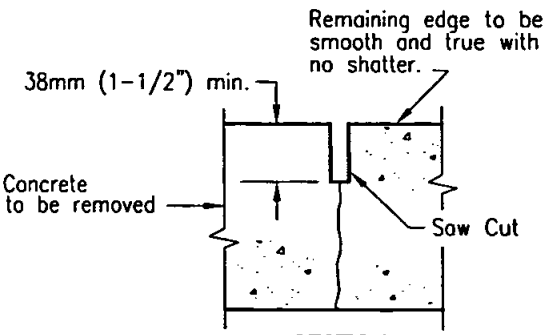

SECTION
Showing Cut

NOTE:

When distance from "Area to be removed" to existing joint, edge or score mark is less than minimum shown, "Area to be removed" shall be extended to joint, edge or score mark.

Revision	By	Approved	Date
ORIGINAL		Kercheval	12/75
Add Metric		T. Stanton	03/03
Reformatted		T. Stanton	04/06

SAN DIEGO REGIONAL STANDARD DRAWING

CONCRETE CURB, GUTTER, SIDEWALK AND PAVEMENT REMOVAL AND REPLACEMENT

RECOMMENDED BY THE SAN DIEGO REGIONAL STANDARDS COMMITTEE

T. Stanton 3/01/2003

Chairperson R.C.E. 19246 Date

DRAWING NUMBER **G-11**

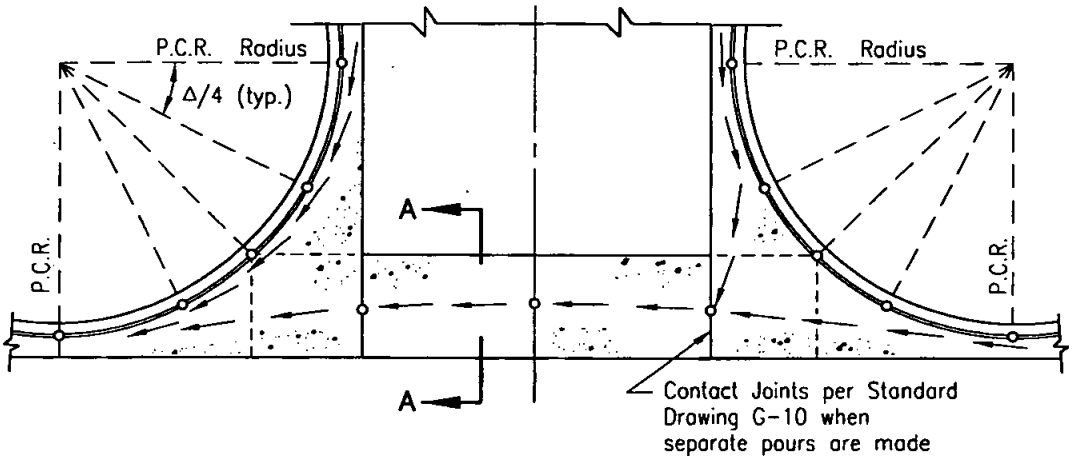

PLAN

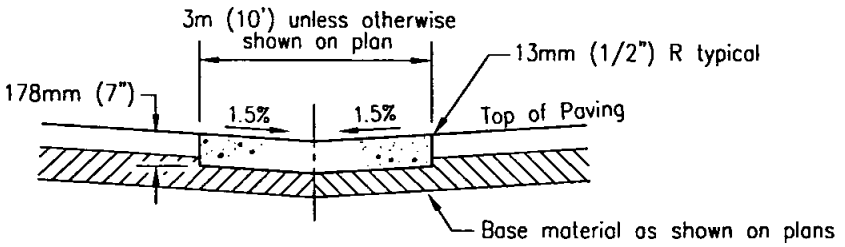

SECTION A–A

NOTES:

1. Concrete shall be 332kg/m^3–C–22–MPa (560–C–3250).
2. - - - - - - - - - = Weakened plane joints.
3. ←— ←— = Typical flowlines.
4. o = Elevations to be shown on plans.
5. Return segments to be 178mm (7") Thick.
6. Curb between P.C.R.s. shall be considered as part of cross gutter.
7. In all cases subgrade shall be compacted to 95% min. relative compaction to depth of 305mm (12").

LEGEND ON PLANS

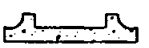

Revision	By	Approved	Date
ORIGINAL		Kercheval	12/75
Add Metric		T. Stanton	03/03
Reformatted		T. Stanton	04/06

SAN DIEGO REGIONAL STANDARD DRAWING

CROSS GUTTER

RECOMMENDED BY THE SAN DIEGO REGIONAL STANDARDS COMMITTEE

T. Stanton 3/10/2003

Chairperson R.C.E. 19246 Date

DRAWING NUMBER **G-12**

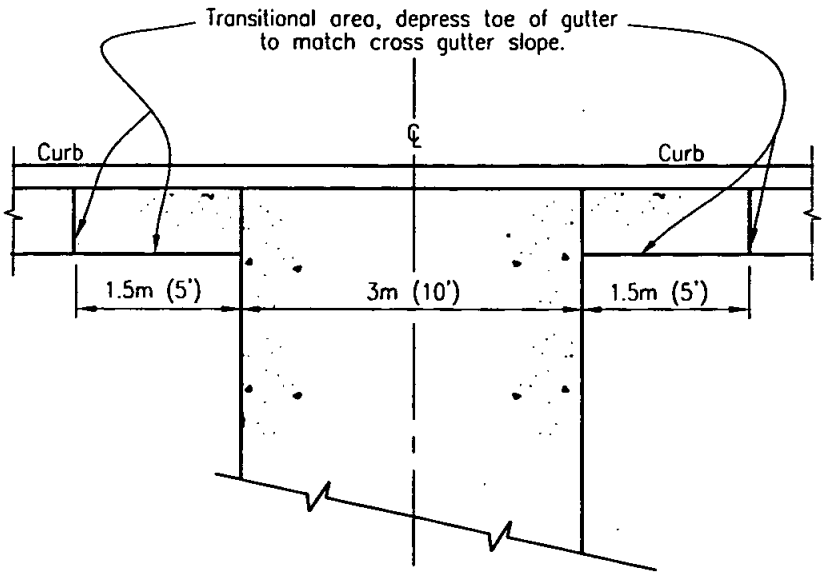

PLAN

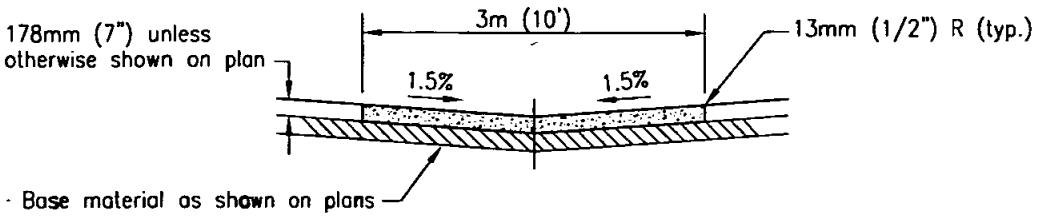

SECTION

NOTES:

1. Cross gutter to be constructed where the drainage is carried across street.
2. Minimum allowable cross slope is 0.5%
3. Concrete shall be 332kg/m^3-C-22-MPa (560-C-3250).
4. In all cases subgrade shall be compacted to 95% minimum relative compaction to depth of 305mm (12").

LEGEND ON PLANS

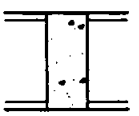

Revision	By	Approved	Date
ORIGINAL		Kercheval	12/75
Add Metric		T. Stanton	03/03
Reformatted		T. Stanton	03/03

SAN DIEGO REGIONAL STANDARD DRAWING

MID-BLOCK CROSS GUTTER

RECOMMENDED BY THE SAN DIEGO REGIONAL STANDARDS COMMITTEE

T. Stanton 3/10/2003

Chairperson R.C.E. 19246 Date

DRAWING NUMBER **G-13**

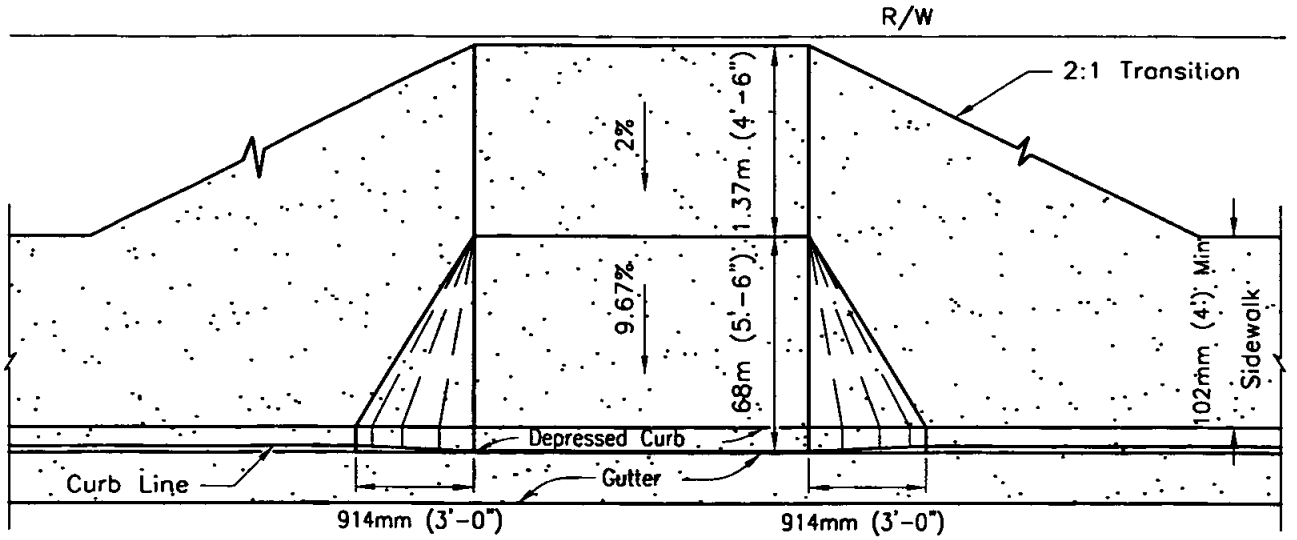

PLAN

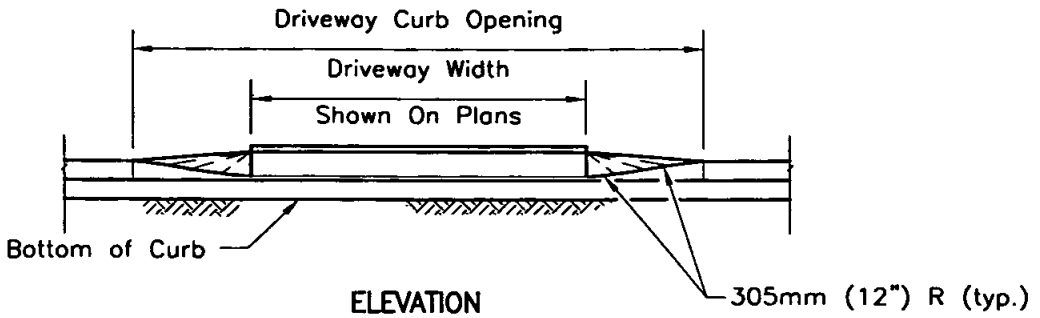

ELEVATION

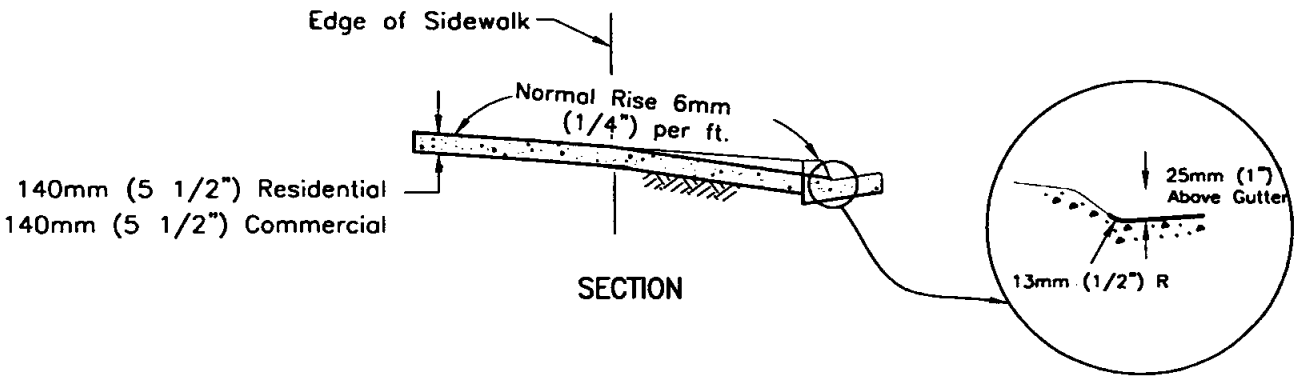

SECTION

NOTES:

1. No concrete shall be placed until forms and subgrade are inspected by the Agency.
2. Concrete shall be 332 kg/M^3 C 22 Mpa (520-C-2500).
3. See Standard Drawings G-15 and G-16 for width and location requirements.
4. Driveway ramp to extend to 3m (10') from curb face or to property line whichever is less. (For commercial driveways only)
5. See Standard Drawings G-2 and G-10 for curb and joint details.

Revision	By	Approved	Date
ORIGINAL		R. Munoz	4/97
Add Metric		T. Stanton	03/03
Reviewed		T. Stanton	04/06

SAN DIEGO REGIONAL STANDARD DRAWING

CONCRETE DRIVEWAY (CONTIGUOUS SIDEWALK)

RECOMMENDED BY THE SAN DIEGO REGIONAL STANDARDS COMMITTEE

T. Stanton 3/01/2003

Chairperson R.C.E. 19246 Date

DRAWING NUMBER **G-14A**

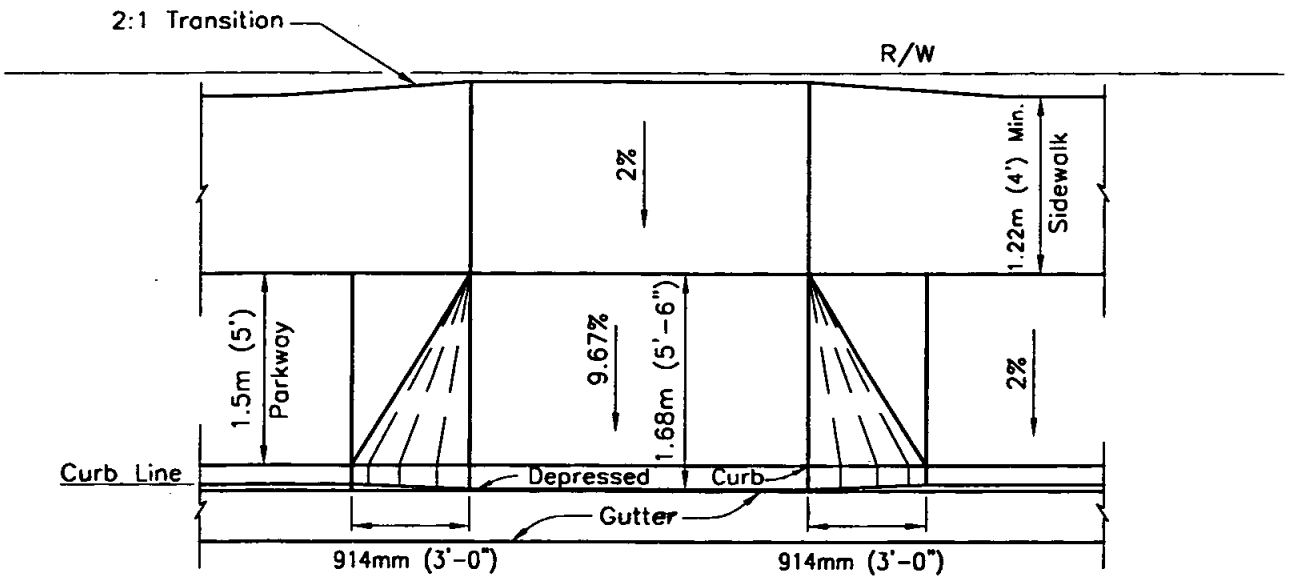

PLAN

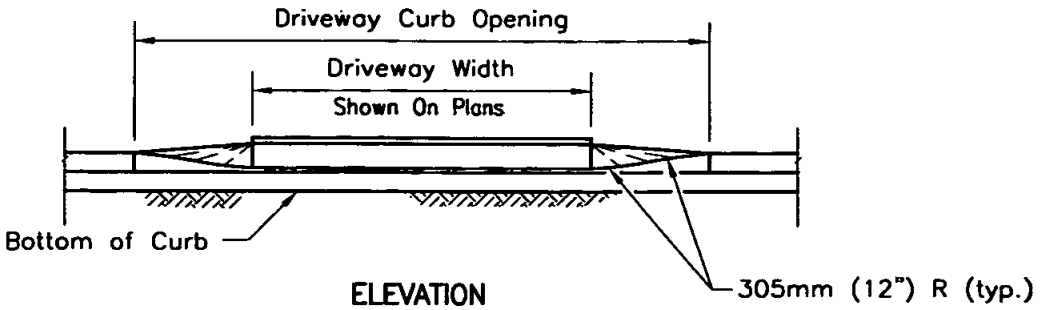

ELEVATION

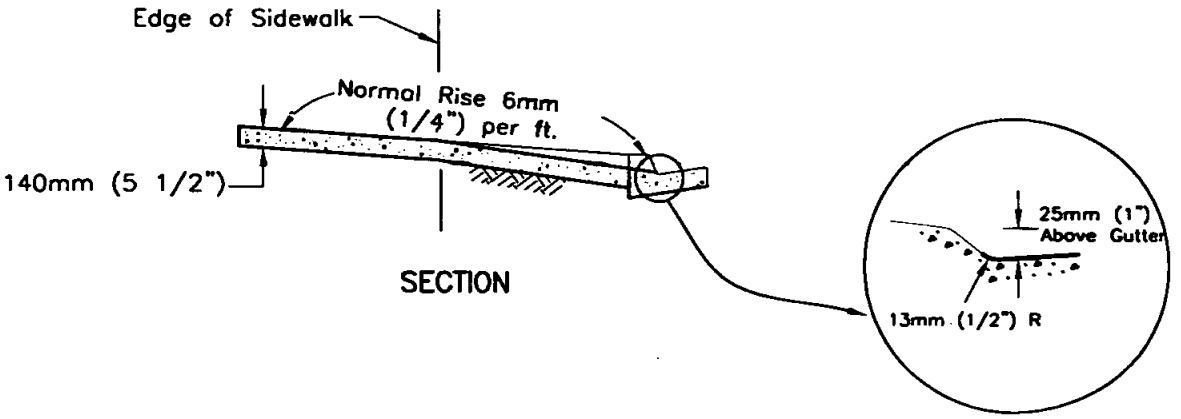

SECTION

NOTES:

1. No concrete shall be placed until forms and subgrade are inspected by the Agency.
2. Concrete shall be 308 kg/M^{3}C 17 Mpa (520-C-2500).
3. See Standard Drawings G-15 and G-16 for width and location requirements.
4. Driveway ramp to extend to 3m (10') from curb face or to property line whichever is less. (For commercial driveways only)
5. See Standard Drawings G-2 and G-10 for curb and joint details.

Revision	By	Approved	Date
ORIGINAL		R. Munoz	4/97
Add Metric		T. Stanton	03/03
Reformatted		T. Stanton	04/06

SAN DIEGO REGIONAL STANDARD DRAWING

CONCRETE DRIVEWAY (NON-CONTIGUOUS SIDEWALK)

RECOMMENDED BY THE SAN DIEGO REGIONAL STANDARDS COMMITTEE

T. Stanton 3/10/2003

Chairperson R.C.E. 19246 Date

DRAWING NUMBER **G-14B**

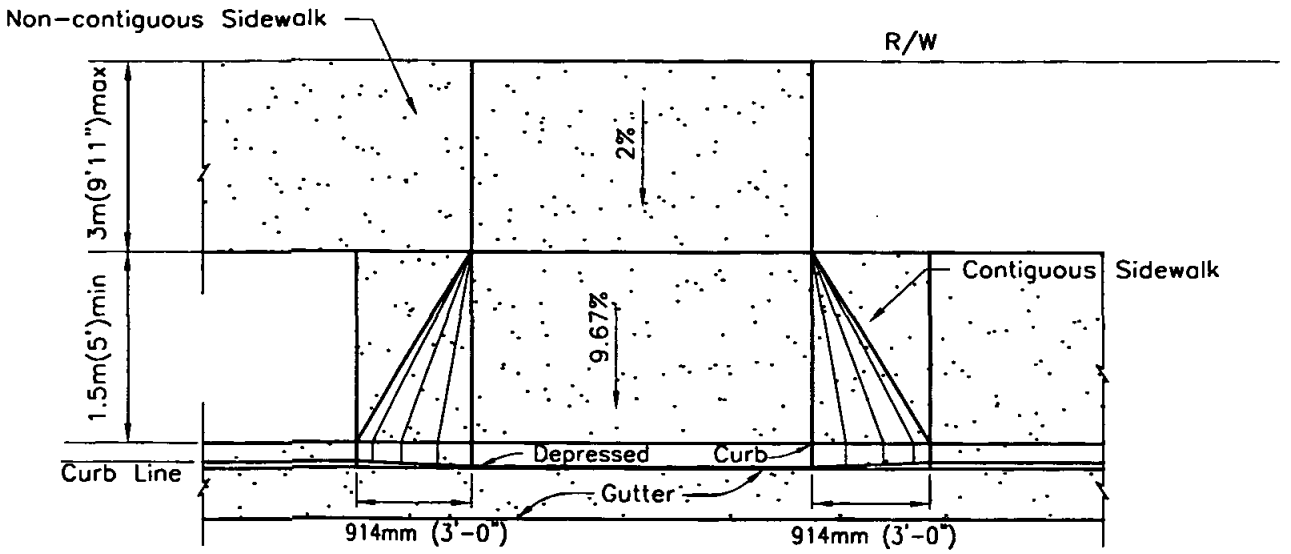

PLAN

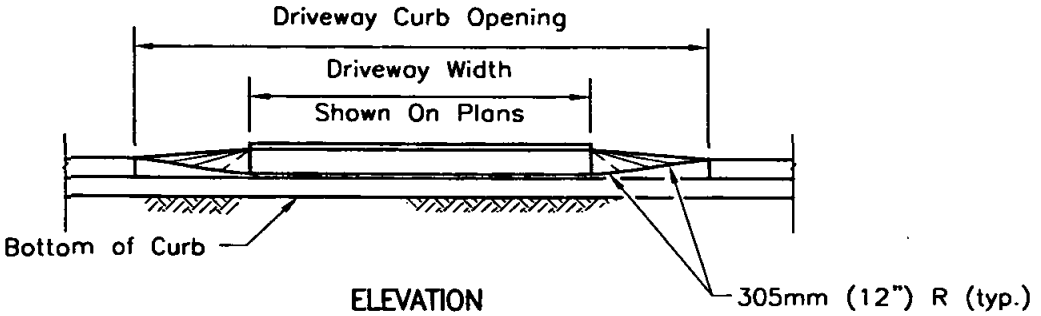

ELEVATION

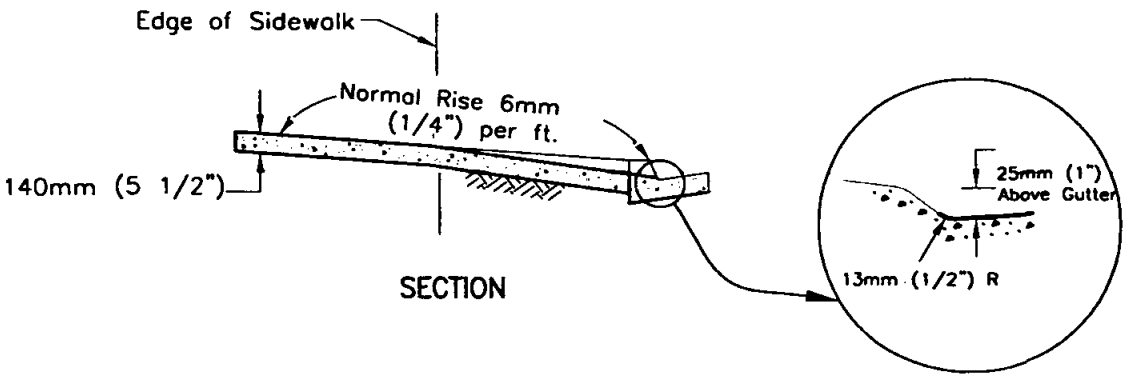

SECTION

NOTES:

1. No concrete shall be placed until forms and subgrade are inspected by the Agency.
2. Concrete shall be 308 kg/M^3 C 17 Mpa (520-C-2500).
3. See Standard Drawings G-15 and G-16 for width and location requirements.
4. Driveway ramp to extend to 3m (10') from curb face or to property line whichever is less. (For commercial driveways only)
5. See Standard Drawings G-2 and G-10 for curb and joint details.

Revision	By	Approved	Date
ORIGINAL		R. Munoz	4/97
Add Metric		T. Stanton	03/03
Reformatted		T. Stanton	04/06

SAN DIEGO REGIONAL STANDARD DRAWING

RESIDENTIAL CONCRETE DRIVEWAY (PARKWAY LESS THAN 3.0m (10') IN DEPTH)

RECOMMENDED BY THE SAN DIEGO REGIONAL STANDARDS COMMITTEE

T. Stanton 3/01/2003

Chairperson R.C.E. 19246 Date

DRAWING NUMBER **G-14C**

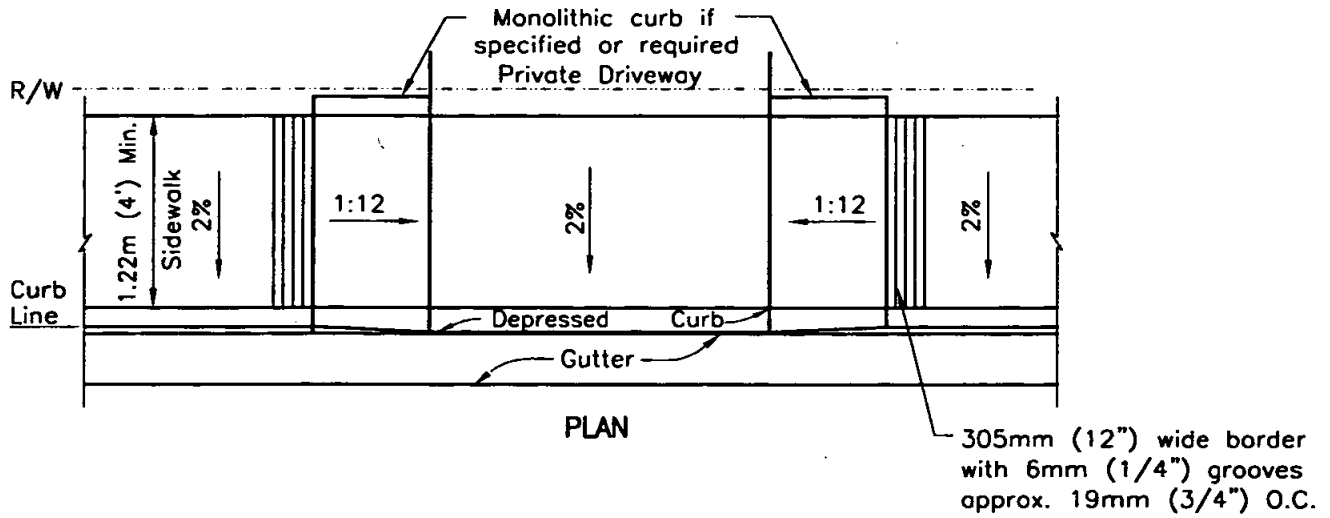

PLAN

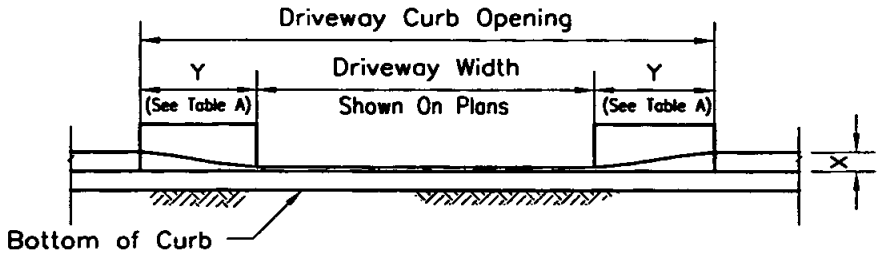

ELEVATION

TABLE A	
X	Y
CURB HIEGHT	RAMP LENGTH
25mm (1")	152mm (0-6")
51mm (2")	457mm (1'-6")
76mm (3")	762mm (2'-6")
102mm (4")	1.10m (3'-6")
127mm (5")	1.40m (4'-6")
152mm (6")	1.70m (5'-6")
178mm (7")	2.0m (6'-6")
203mm (8")	23m (7'-6")

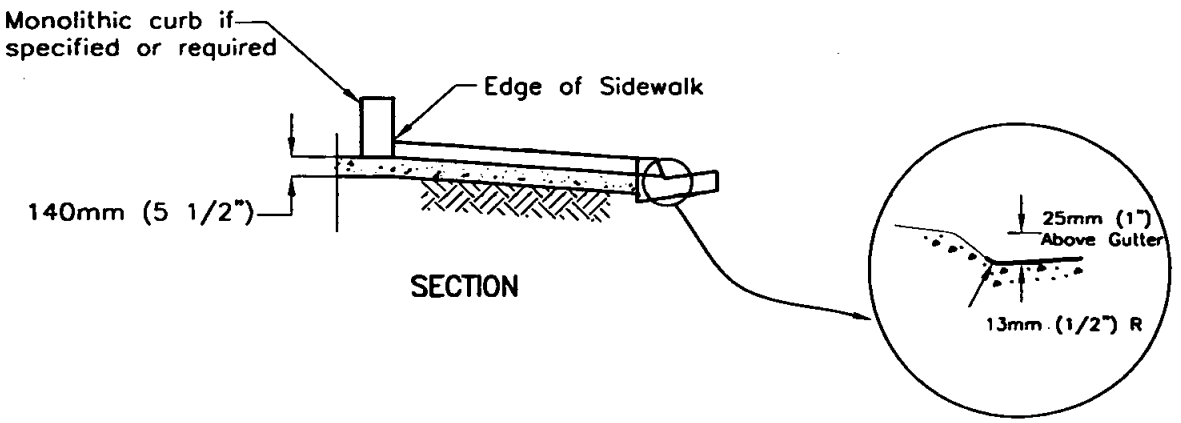

SECTION

NOTES:

1. No concrete shall be placed until forms and subgrade are inspected by the Agency.
2. Concrete shall be 308 kg/M^{3}C 17 Mpa (520-C-2500).
3. See Standard Drawings G-15 and G-16 for width and location requirements.
4. See Standard Drawings G-2 and G-10 for curb and joint details.

Revision	By	Approved	Date
ORIGINAL	HH	T. Stanton	02/03
Add Metric		T. Stanton	03/03
Reviewed		T. Stanton	04/06

SAN DIEGO REGIONAL STANDARD DRAWING

CONCRETE DRIVEWAY (FOR CONFINED RIGHT-OF-WAY)

RECOMMENDED BY THE SAN DIEGO REGIONAL STANDARDS COMMITTEE

T. Stanton 3/01/2003

Chairperson R.C.E. 19246 Date

DRAWING NUMBER G-14D

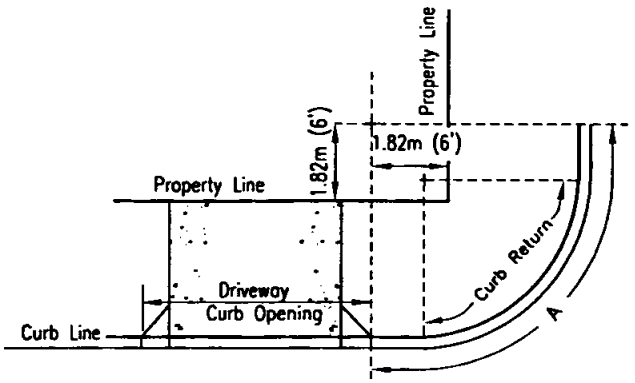

REQUIREMENT 1

No portion of any curb opening shall be permitted within 6' of the intersection of the prolonged property lines and the curb as shown by arc A.

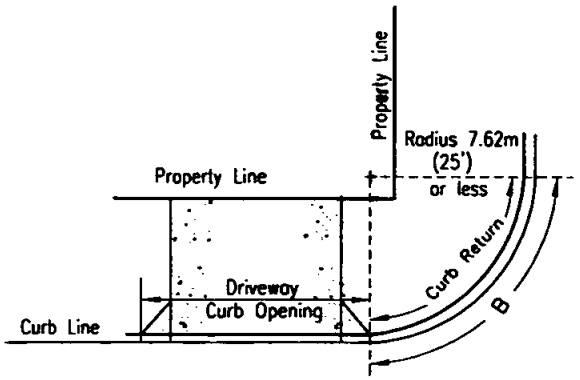

REQUIREMENT 2

No portion of any curb opening shall be permitted in the curb return where the radius of curb is 7.62m (25') or less, as shown by arc B.

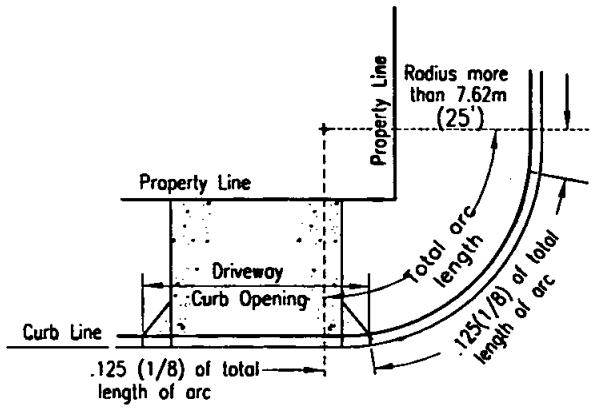

REQUIREMENT 3

On all curb returns where the radius is more than 25', curb openings may encroach upon each end of the return a distance equal to 12 1/2% or .125 (1/8) of the total length of the arc on the curb return, thus leaving at least 75% of the length of arc on the return face free from driveway encroachment, provided Requirement 1 is met.

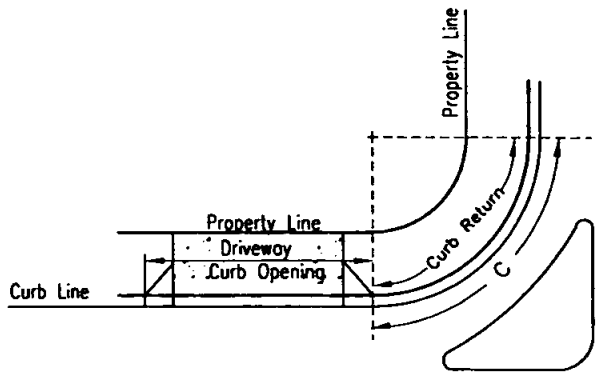

REQUIREMENT 4

No portion of any curb opening shall be permitted in the curb return where a separate turning movement is provided, as shown by arc C.

Revision	By	Approved	Date
ORIGINAL		Kercheval	12/75
Add Metric		T. Stanton	03/03
Reviewed		T. Stanton	04/06

SAN DIEGO REGIONAL STANDARD DRAWING

DRIVEWAY LOCATION - ADJACENT TO CURB RETURNS AND STREET LINES

RECOMMENDED BY THE SAN DIEGO REGIONAL STANDARDS COMMITTEE

T. Stanton 3/10/2003

Chairperson R.C.E. 19246 Date

DRAWING NUMBER **G-15**

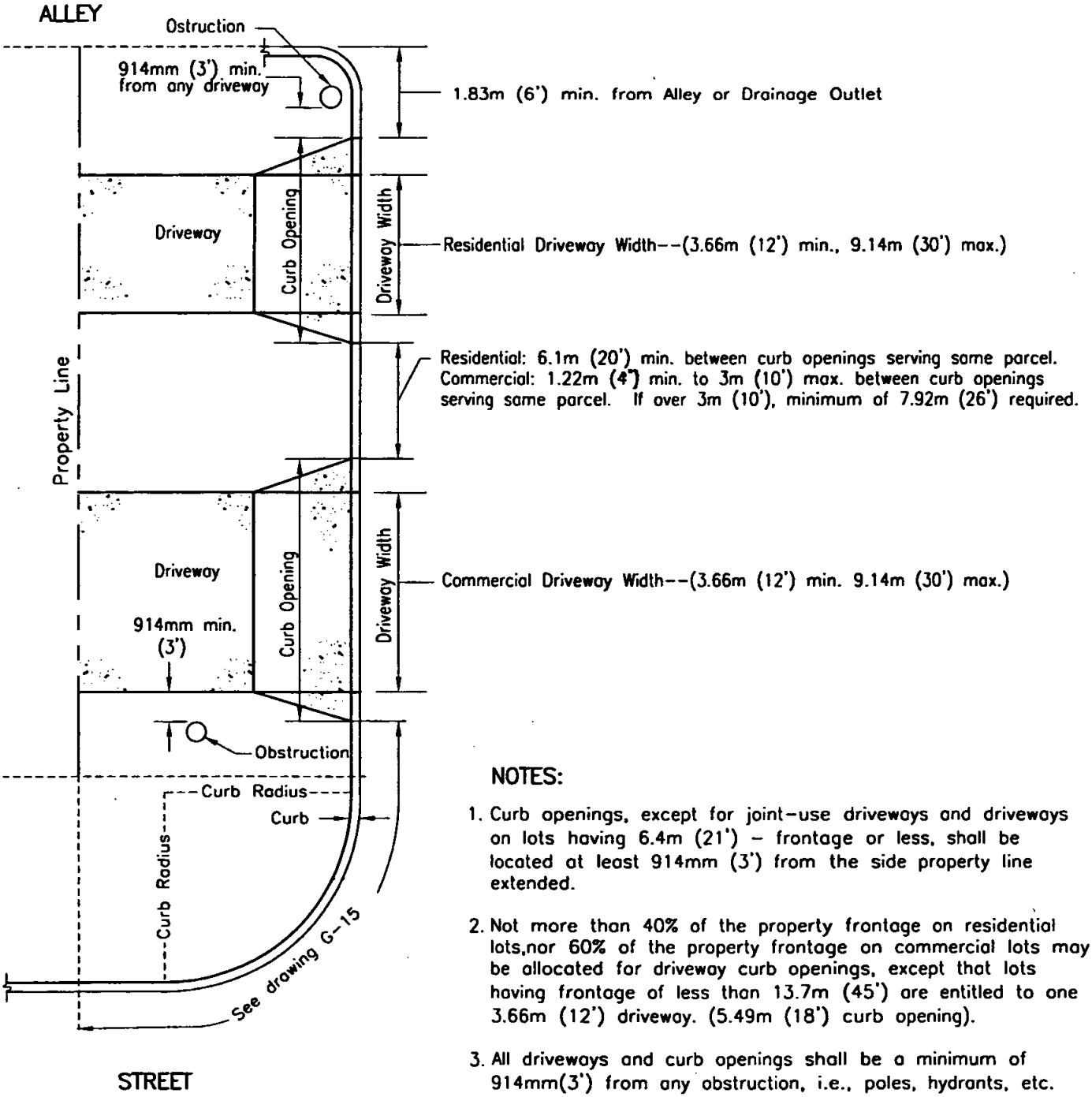

NOTES:

1. Curb openings, except for joint-use driveways and driveways on lots having 6.4m (21') - frontage or less, shall be located at least 914mm (3') from the side property line extended.

2. Not more than 40% of the property frontage on residential lots,nor 60% of the property frontage on commercial lots may be allocated for driveway curb openings, except that lots having frontage of less than 13.7m (45') are entitled to one 3.66m (12') driveway. (5.49m (18') curb opening).

3. All driveways and curb openings shall be a minimum of 914mm(3') from any obstruction, i.e., poles, hydrants, etc.

4. No portion of any driveway shall be allowed across a line extending normal to the roadway from the front corner of the property, except that joint-use driveways may be permitted in special instances where written approval of both property owners is filed with the Agency.

Revision	By	Approved	Date
ORIGINAL		Kercheval	12/75
Add Metric		T. Stanton	03/03
Reviewed		T. Stanton	04/06

SAN DIEGO REGIONAL STANDARD DRAWING

DRIVEWAY LOCATION AND WIDTH REQUIREMENTS

RECOMMENDED BY THE SAN DIEGO REGIONAL STANDARDS COMMITTEE

T. Stanton 3/10/2003

Chairperson R.C.E. 19246 Date

DRAWING NUMBER **G-16**

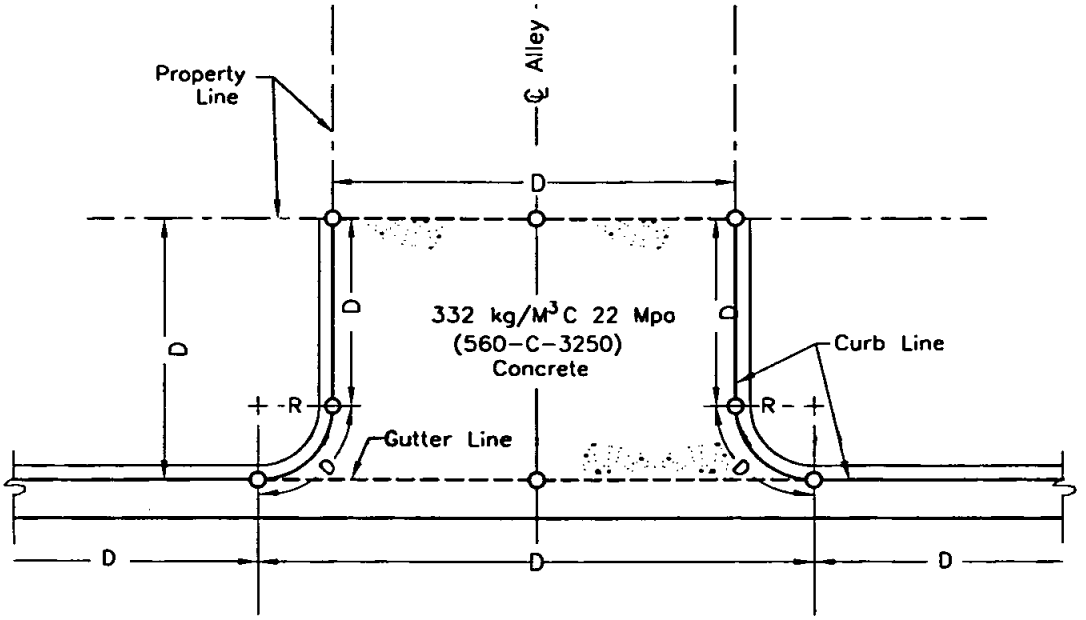

PLAN

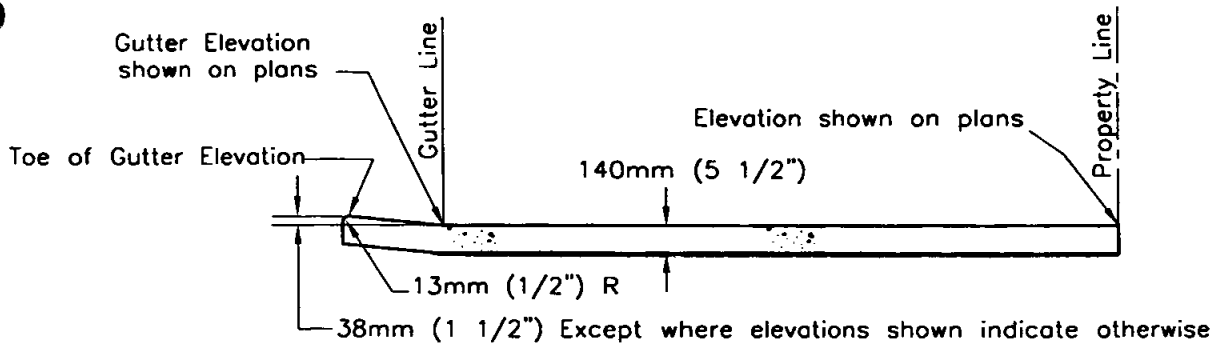

℄ SECTION

NOTES:

1. Sidewalk ramps shall be installed as required by Agency.
2. D= distance shown on plans.
3. R= radius shown on plans (914mm (3') minimum).
4. O= elevations shown on plans (top of curb, and gutter elev.)
5. --- = 13mm (1/2") expansion joints.

LEGEND ON PLANS

Revision	By	Approved	Date
ORIGINAL		Kerchevol	12/75
Add Metric		T. Stanton	03/03
Reviewed		T. Stanton	04/06

SAN DIEGO REGIONAL STANDARD DRAWING

ALLEY APRON

RECOMMENDED BY THE SAN DIEGO REGIONAL STANDARDS COMMITTEE

T. Stanton 3/10/2003

Chairperson R.C.E. 19246 Date

DRAWING NUMBER G-17

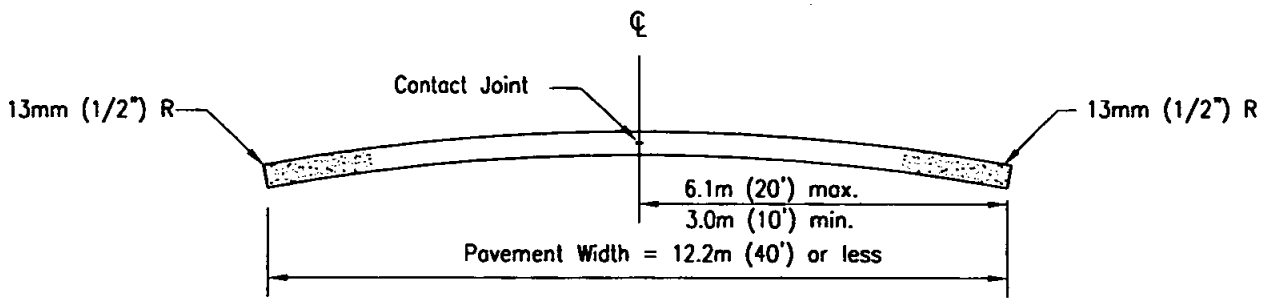

SECTION

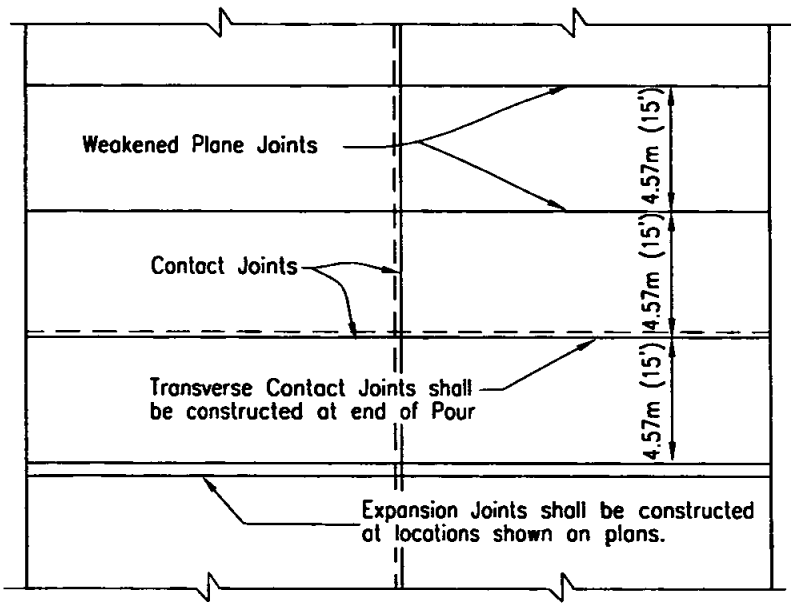

PLAN

NOTES:

1. Concrete shall be 332 kg/M^{3}C 22 Mpa (560-C-3250).
2. See Standard Drawing G-10 for joint details.
3. Adjust 4.57m (15') interval between Transverse Joints to match adjacent existing improvements.

Revision	By	Approved	Date
ORIGINAL		Kercheval	12/75
Add Metric		T. Stanton	03/03
Reviewed		T. Stanton	04/06

SAN DIEGO REGIONAL STANDARD DRAWING

CONCRETE PAVEMENT
WIDTH 12.2m (40') OR LESS

RECOMMENDED BY THE SAN DIEGO REGIONAL STANDARDS COMMITTEE

T. Stanton 3/10/2003

Chairperson R.C.E. 19246 Date

DRAWING NUMBER **G-18**

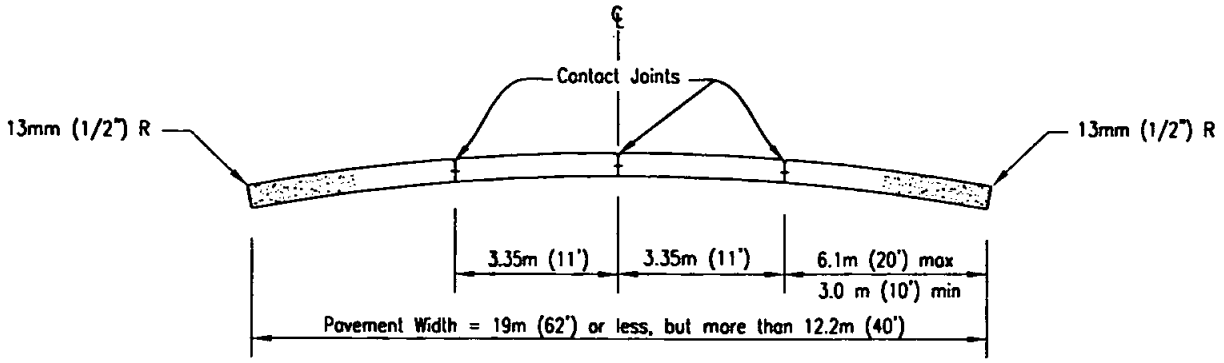

SECTION

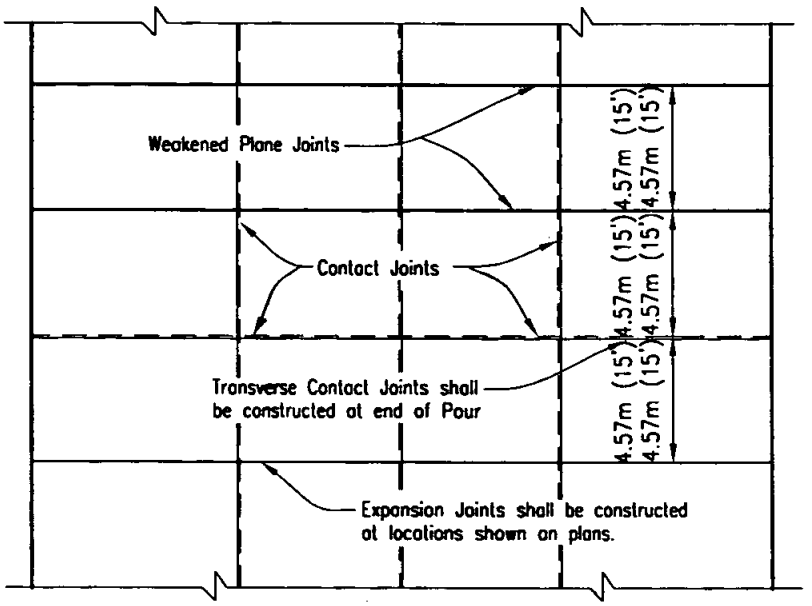

PLAN

NOTES:

1. Concrete shall be 332 kg/M^3 C 22 Mpa (560-C-3250).
2. See Standard Drawing G-10 for joint details.
3. Adjust 4.57m (15') interval between Transverse Joints to match adjacent existing improvements.

Revision	By	Approved	Date
ORIGINAL		Kercheval	12/75
Add Metric		T. Stanton	03/03
Reviewed		T. Stanton	04/06

SAN DIEGO REGIONAL STANDARD DRAWING

CONCRETE PAVEMENT
WIDTH 12.2m (40') TO 19m (62')

RECOMMENDED BY THE SAN DIEGO REGIONAL STANDARDS COMMITTEE

T. Stanton 3/10/2003

Chairperson R.C.E. 19246 Date

DRAWING NUMBER **G-19**

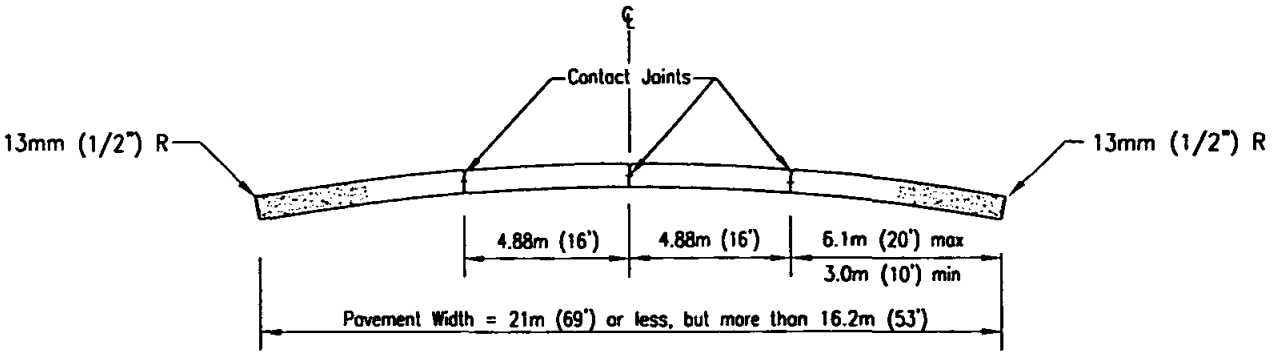

SECTION

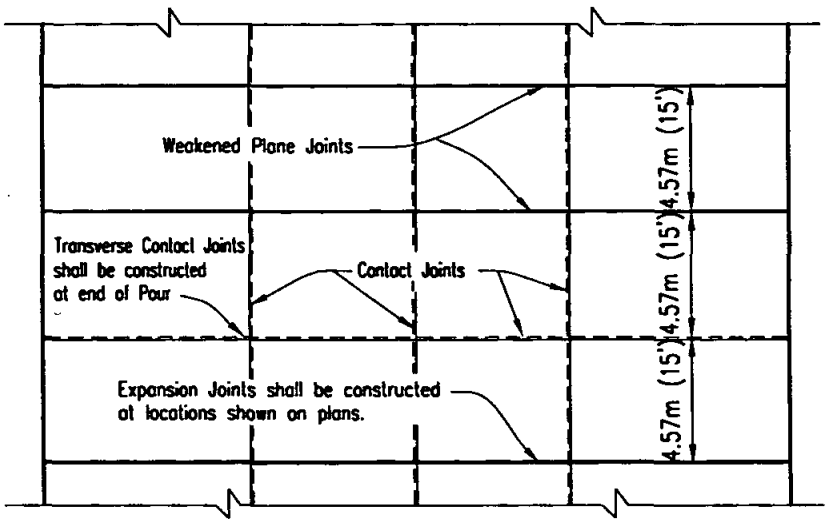

PLAN

NOTES:

1. Concrete shall be 332 kg/M^3 C 22 Mpa (560-C-3250).
2. See Standard Drawing G-10 for joint details.
3. Adjust 4.57m (15') interval between Transverse Joints to match adjacent existing improvements.

Revision	By	Approved	Date
ORIGINAL		Kercheval	12/75
Add Metric		T. Stanton	03/03
Reviewed		T. Stanton	04/06

SAN DIEGO REGIONAL STANDARD DRAWING

CONCRETE PAVEMENT, ALLEY SECTION WIDTH 16.2m (53') TO 21m (69')

RECOMMENDED BY THE SAN DIEGO REGIONAL STANDARDS COMMITTEE

T. Stanton 3/01/2003

Chairperson R.C.E. 19246 Date

DRAWING NUMBER **G-20**

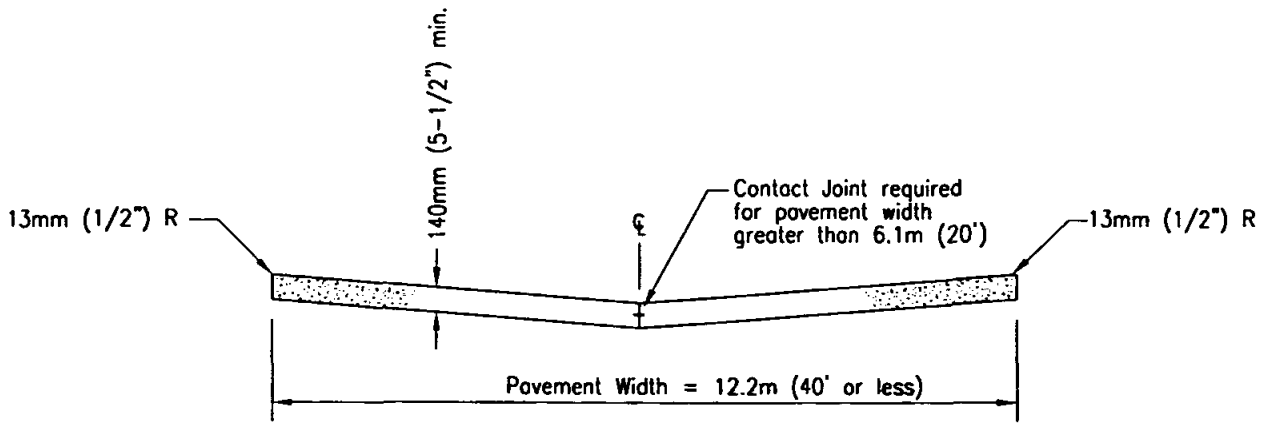

SECTION

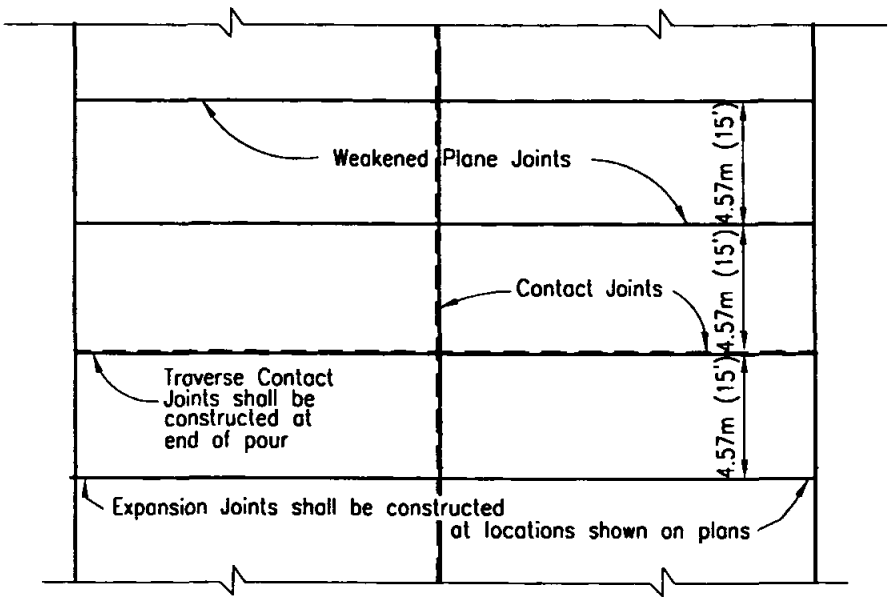

PLAN

NOTES:

1. Concrete shall be 332 kg/M³ C 22 Mpa (560-C-3250).
2. See Standard Drawing G-10 for joint details.
3. Adjust 4.57m (15') interval between Transverse Joints to match adjacent existing improvements.

Revision	By	Approved	Date
ORIGINAL		Kercheval	12/75
Add Metric		T. Stanton	03/03
Reviewed		T. Stanton	04/06

SAN DIEGO REGIONAL STANDARD DRAWING

CONCRETE PAVEMENT ALLEY SECTION, WIDTH 12.2m (40') OR LESS

RECOMMENDED BY THE SAN DIEGO REGIONAL STANDARDS COMMITTEE

T. Stanton 3/10/2003

Chairperson R.C.E. 19246 Date

DRAWING NUMBER G-21

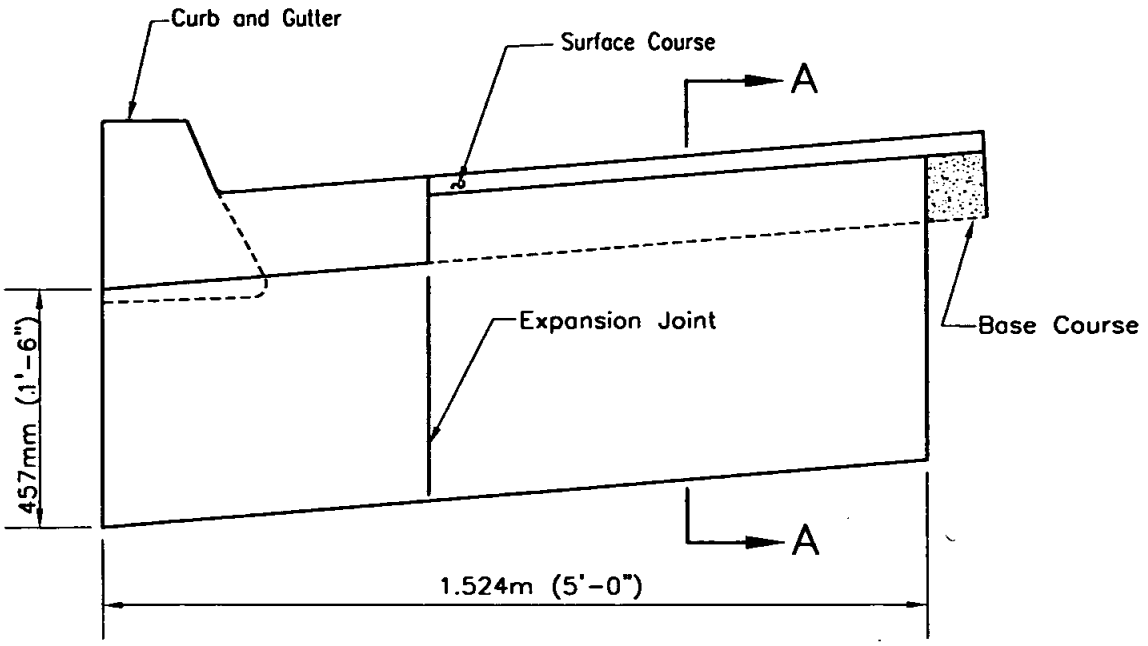

ELEVATION

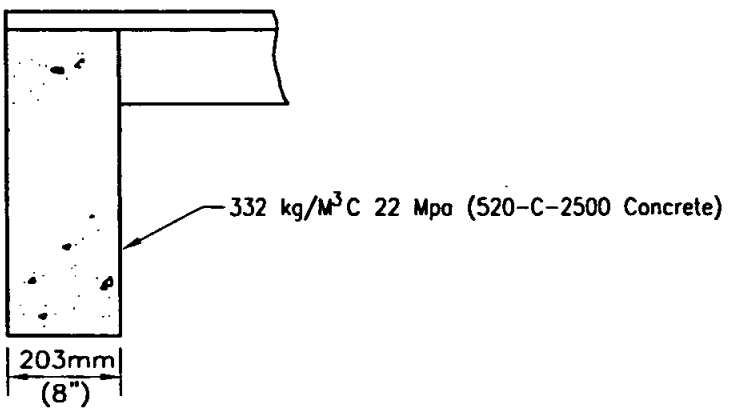

SECTION A-A

LEGEND ON PLANS

Revision	By	Approved	Date
ORIGINAL		Kercheval	12/75
Add Metric		T. Stanton	03/03
Reviewed		T. Stanton	04/06

SAN DIEGO REGIONAL STANDARD DRAWING

CUTOFF WALL AT END OF PAVEMENT

RECOMMENDED BY THE SAN DIEGO REGIONAL STANDARDS COMMITTEE

T. Stanton 3/01/2003

Chairperson R.C.E. 19246 Date

DRAWING NUMBER G-22

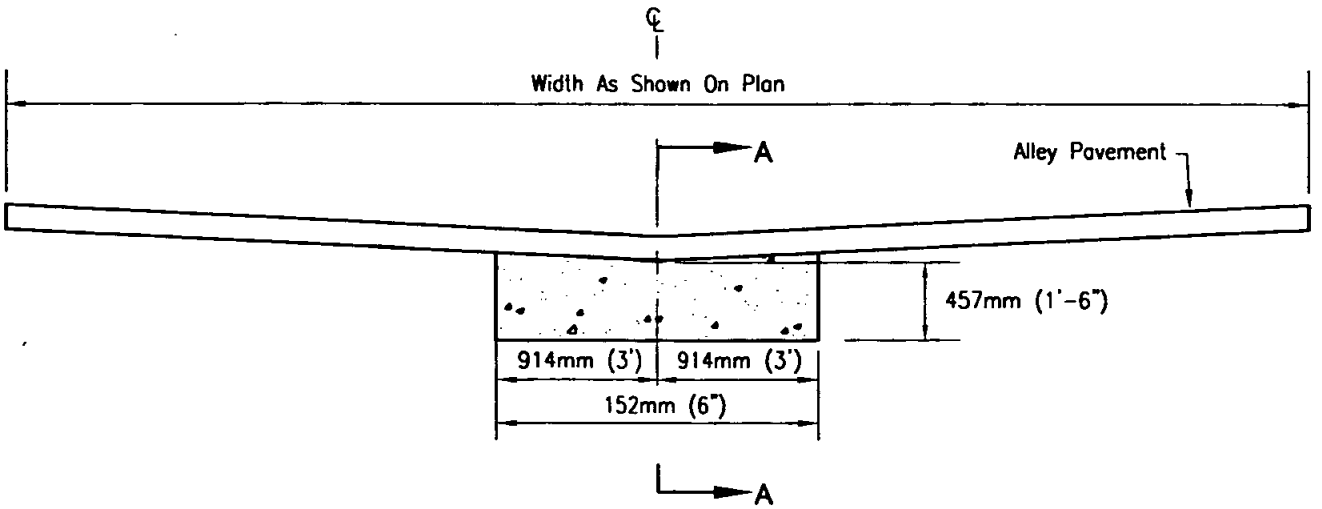

ELEVATION

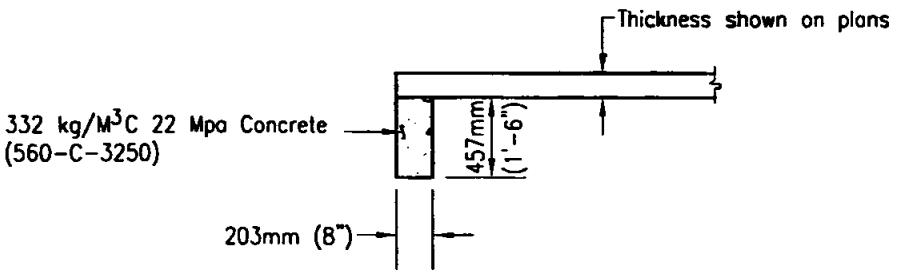

SECTION A–A

LEGEND ON PLANS

Revision	By	Approved	Date
ORIGINAL		Kercheval	12/75
Add Metric		T. Stanton	03/03
Reviewed		T. Stanton	04/06

SAN DIEGO REGIONAL STANDARD DRAWING

CUTOFF WALL AT END OF ALLEY PAVEMENT

RECOMMENDED BY THE SAN DIEGO REGIONAL STANDARDS COMMITTEE

T. Stanton 3/01/2003

Chairperson R.C.E. 19246 Date

DRAWING NUMBER G-23

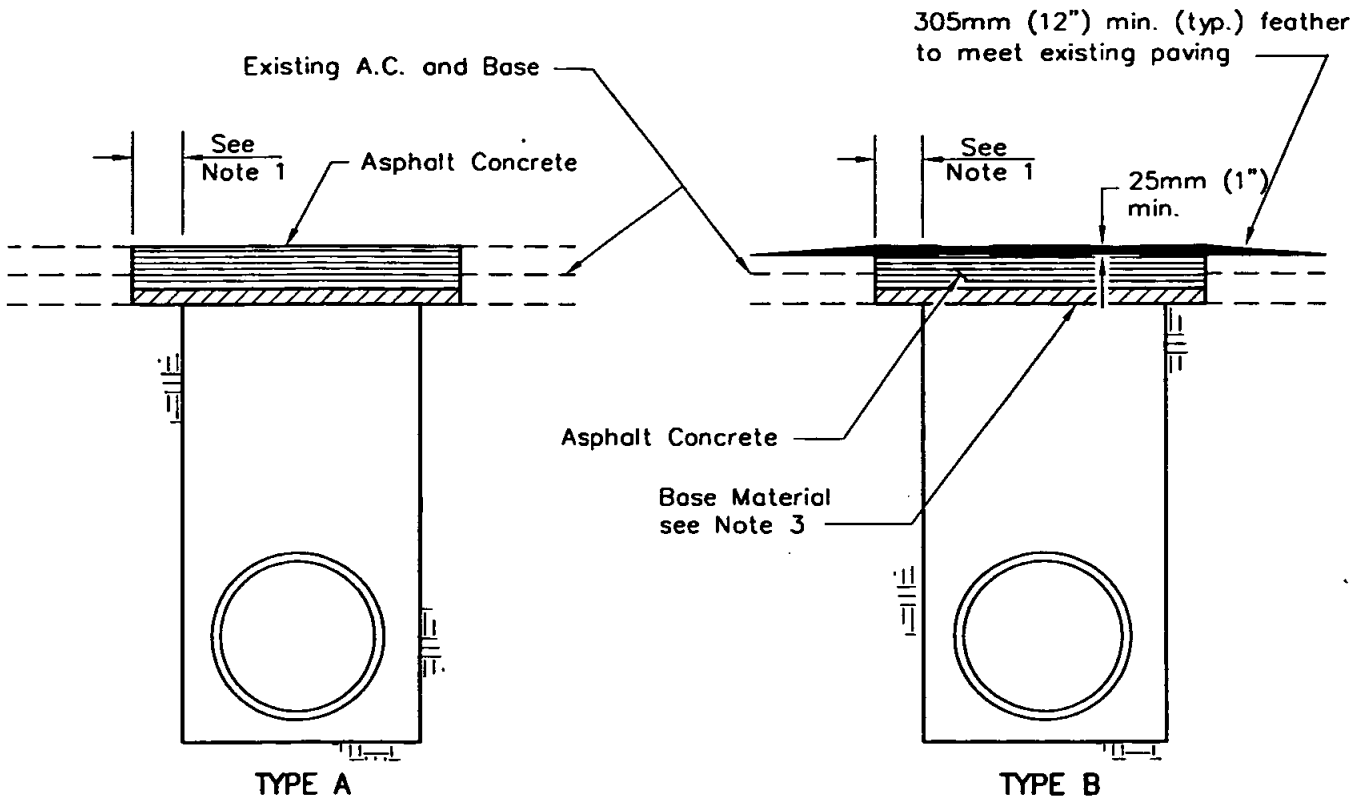

NOTES:

1. Trench edges to be cut a minimum of 152mm (6") wider than trench for 914mm (3') wide or less, and 305mm (12") wider for trenches over 914mm (3') wide.
2. Existing A.C. shall be cut and removed in such a manner so as not to tear, bulge or displace adjacent pavement. Edges shall be clean and vertical. All cuts shall be parallel or perpendicular to street centerline, when practical.
3. Base material shall be replaced to depth of existing base. A.C. may be substituted for base material.
4. A tack coat of asphaltic emulsion or paving asphalt shall be applied to existing A.C. or P.C.C. contact surfaces, prior to resurfacing.
5. Asphalt Concrete Resurfacing:
   a) Minimum total thickness shall be one inch greater than existing A.C.
   b) A.C. shall be hot plant mix.
   c) Finish course for Type B resurfacing shall be laid down using a spreader box.
6. All A.C. resurfacing shall be seal coated with an emulsified asphalt and covered with sand. Chip sealing shall be applied as required by Agency.
7. Type B shall not be used on lateral crossings.
8. Sloughing of trench under pavement shall be cause for requiring additional pavement and base.

Revision	By	Approved	Date
ORIGINAL		Parkinson	2/95
Add Metric		T. Stanton	03/03
Reviewed		T. Stanton	04/06

SAN DIEGO REGIONAL STANDARD DRAWING

TRENCH RESURFACING TYPES A & B

RECOMMENDED BY THE SAN DIEGO REGIONAL STANDARDS COMMITTEE

T. Stanton 3/10/2003

Chairperson R.C.E. 19246 Date

DRAWING NUMBER **G-24**

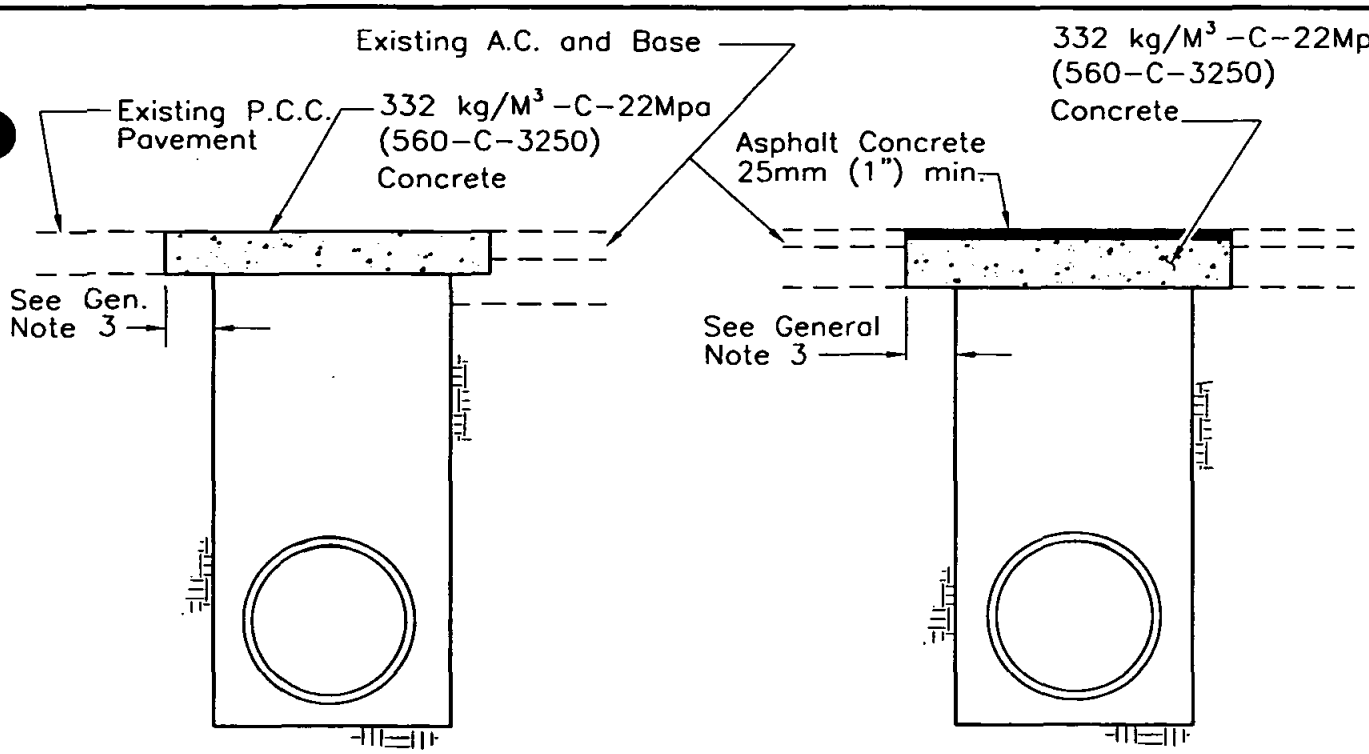

TYPE C

TYPE D

GENERAL NOTES:

1. Existing A.C. shall be cut and removed in such a manner so as not to tear, bulge or displace adjacent pavement. Edges shall be clean and vertical. All cuts shall be parallel or perpendicular to street centerline, when practical.
2. Sloughing of trench under pavement shall be cause for requiring additional pavement and base.
3. Trench edges to be cut a minimum of 152mm(6") wider than trench for 914mm (3') wide or less, and 305mm (12") wider for trenches over 914mm (3') wide.

NOTES TYPE-C:

1. Concrete shall be colored black where required to match existing pavement, method to be specified by Agency.
2. Minimum concrete thickness:
   Alleys and local residential street ----------127mm (5")
   Major streets and highway ----------178mm (7")
   Trench resurfacing in P.C.C. pavement shall have the above minimum thickness or match the existing concrete thickness plus one inch, whichever is greater.

NOTES TYPE-D:

1. A.C. shall be hot plant mix.
2. A tack coat of asphaltic emulsion or paving asphalt shall be applied to the existing A.C. at all contact surfaces and to portland cement concrete prior to placing new A.C.
3. A.C. resurfacing shall be seal coated with an emulsified asphalt and covered with sand. Chip sealing shall be applied as required by Agency.

Revision	By	Approved	Date
ORIGINAL		Parkinson	2/95
Add Metric		T. Stanton	03/03
Reviewed		T. Stanton	04/06

SAN DIEGO REGIONAL STANDARD DRAWING

TRENCH RESURFACING
TYPES C & D

RECOMMENDED BY THE SAN DIEGO REGIONAL STANDARDS COMMITTEE

T. Stanton 3/10/2003

Chairperson R.C.E. 19246 Date

DRAWING NUMBER **G-25**

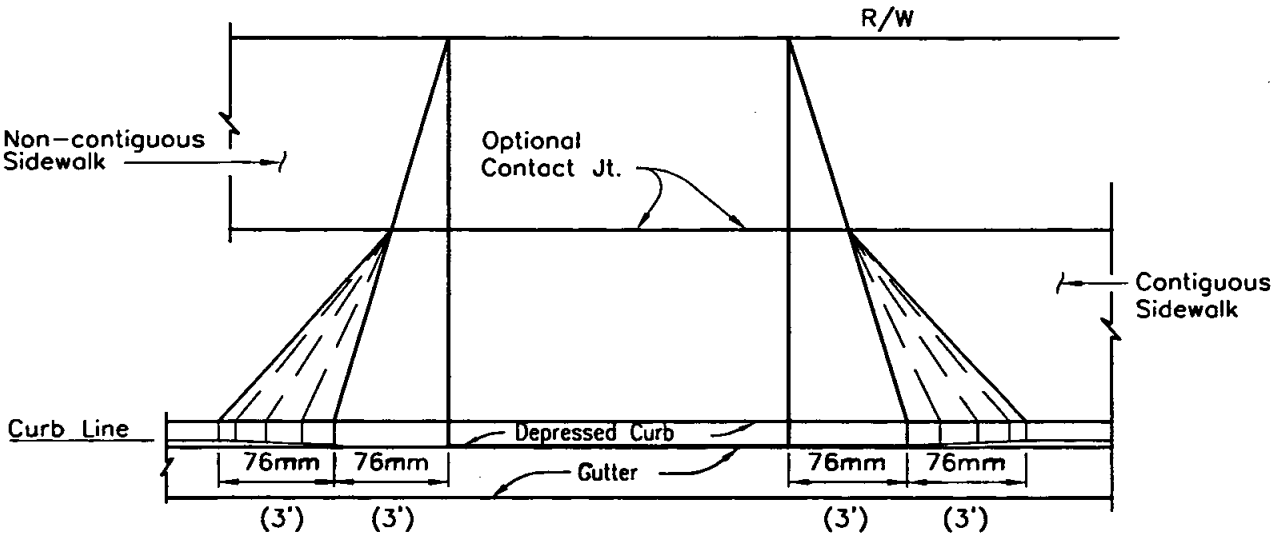

PLAN

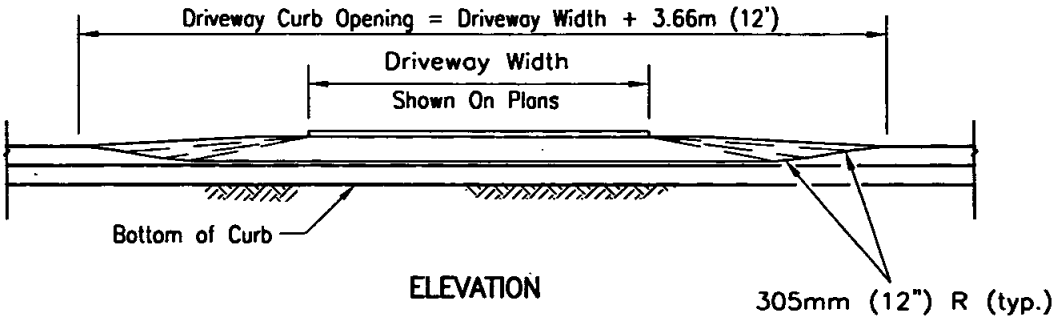

ELEVATION

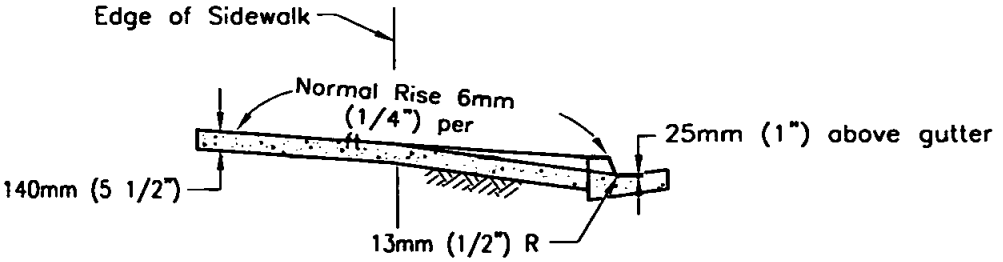

SECTION

NOTES:

1. No concrete shall be be placed until forms and subgrade are inspected by the Agency.
2. Concrete shall be 308 kg/M^{3}C 17 Mpa (520-C-2500.)
3. See Standard Drawings G-15 and G-16 for width and location requirements
4. Driveway ramp to extend to 3m (10') from curb face or to property line whichever is less. (For commercial driveways only)
5. See Standard Drawings G-2 and G-10 for curb and joint details.

Revision	By	Approved	Date
ORIGINAL		H. Hecht	10/82
Add Metric		T. Stanton	03/03
Reviewed		T. Stanton	04/06

SAN DIEGO REGIONAL STANDARD DRAWING

CONCRETE DRIVEWAY COMMERCIAL ALTERNATE

RECOMMENDED BY THE SAN DIEGO REGIONAL STANDARDS COMMITTEE

T. Stanton 3/01/2003

Chairperson R.C.E. 19246 Date

DRAWING NUMBER G-26

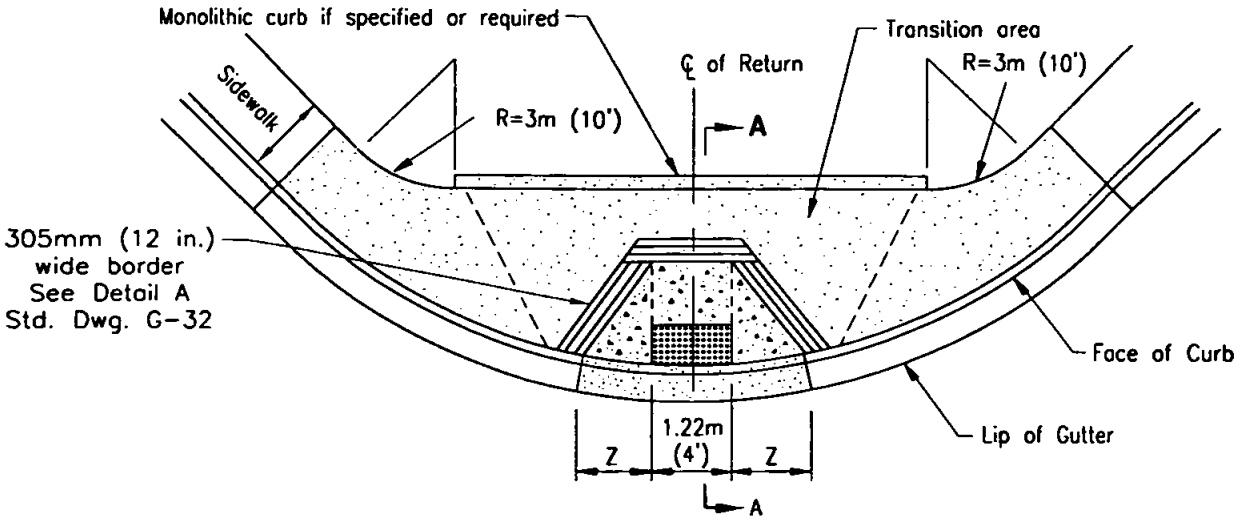

PLAN – TYPE A

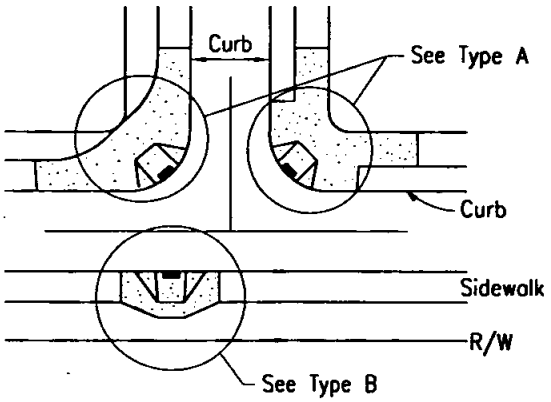

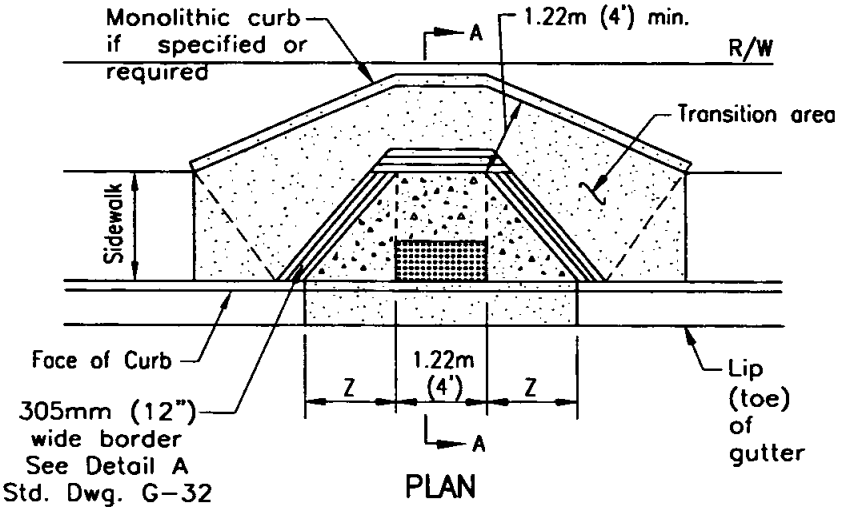

PLAN

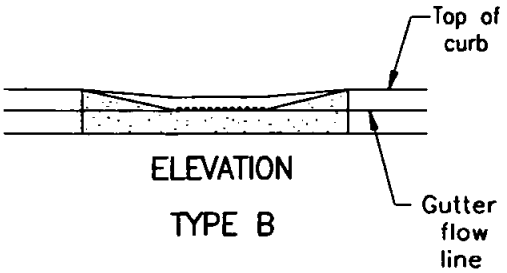

ELEVATION

TYPE B

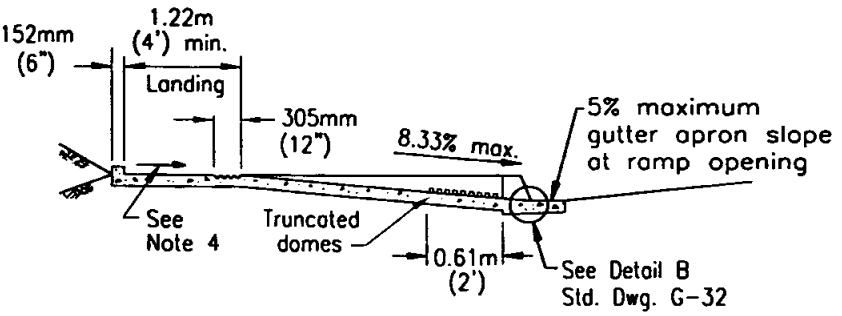

SECTION A–A

NOTES:

1. See Drawing G-32 for general notes.
2. For truncated domes details, please see Drawing G-30.
3. Z side slope shall be 10:1.
4. Landing cross slope shall be 2.0% max. in both directions.

Revision	By	Approved	Date
ORIGINAL		M.Bahmanian	4/86
Add Metric		T. Stanton	03/03
UPDATE		D. Davies	12/04
Revised		T. Stanton	04/06

SAN DIEGO REGIONAL STANDARD DRAWING

CURB RAMP - TYPES A AND B (NEW CONSTRUCTION)

RECOMMENDED BY THE SAN DIEGO REGIONAL STANDARDS COMMITTEE

T. Stanton 12-09-2004

Chairperson R.C.E. 19246 Date

DRAWING NUMBER G-27

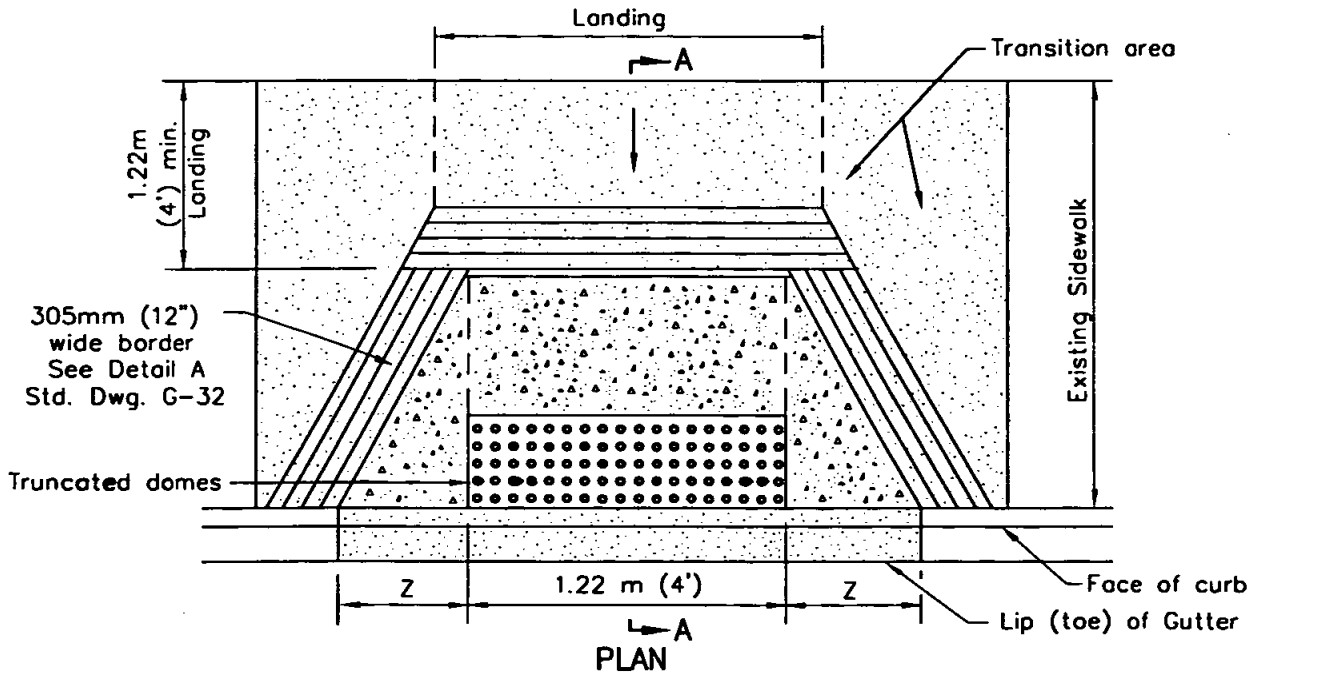

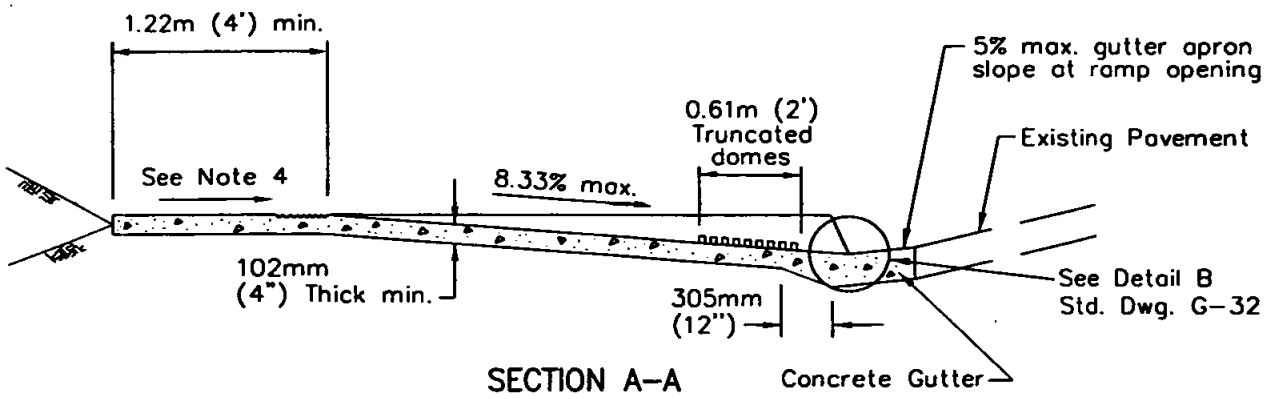

NOTES:

1. See Standard Drawing G-32 for general notes.
2. Type A-1 is a designation for ramp at curb return.
3. Type B-1 is a designation for ramp at straight curb (shown above).
4. Landing cross slope shall be 2.0% max. in both directions.
5. For truncated domes details, please see Standard Drawing G-30.
6. Z side slope shall be 10:1.

Revision	By	Approved	Date
ORIGINAL		M.Bahmanian	2/95
Add Metric		T. Stanton	03/03
UPDATE		D. Davies	12/04
Revised		T. Stanton	04/06

SAN DIEGO REGIONAL STANDARD DRAWING

CURB RAMP - TYPES A-1 AND B-1 (FOR EXISTING SIDEWALK)

RECOMMENDED BY THE SAN DIEGO REGIONAL STANDARDS COMMITTEE

T. Stanton 12-09-2004

Chairperson R.C.E. 19246 Date

DRAWING NUMBER G-28

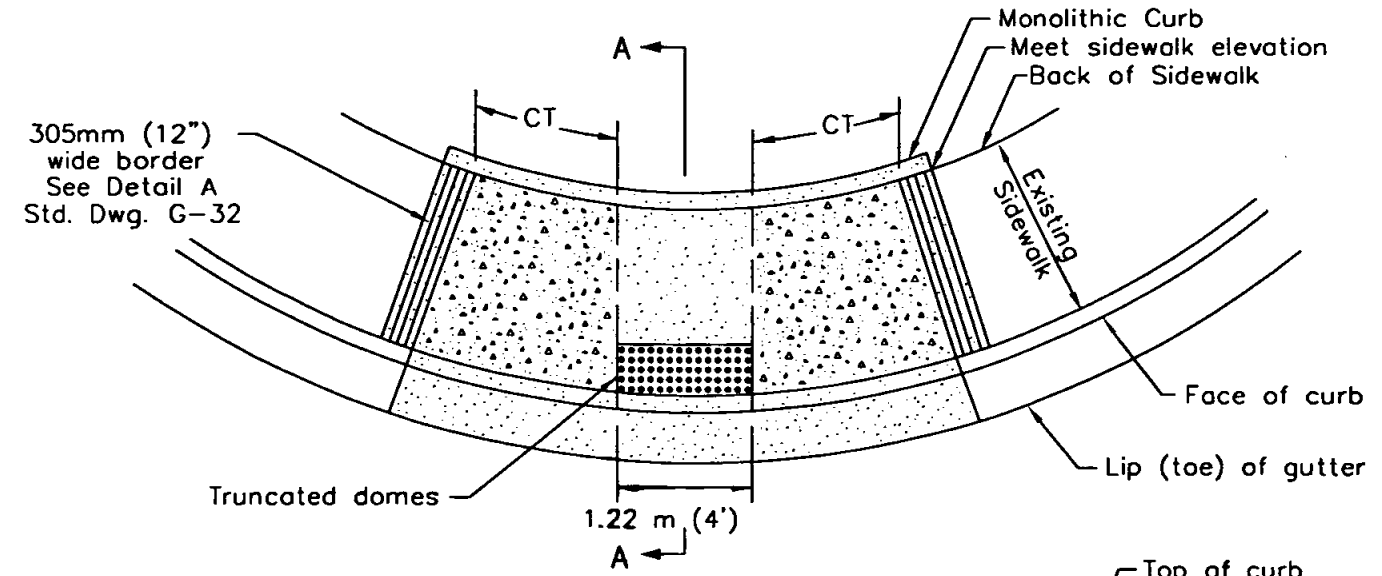

PLAN

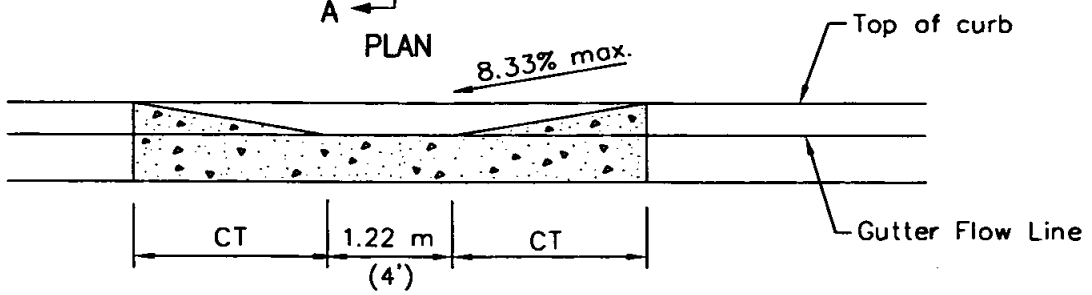

ELEVATION

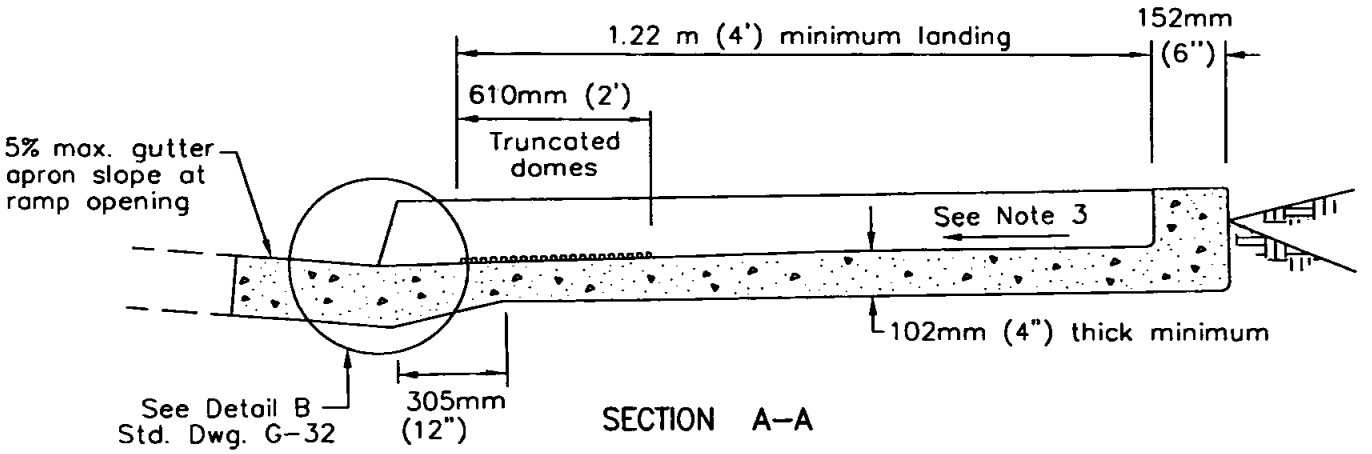

SECTION A–A

NOTES:

1. Type C ramps are only to be used to mitigate existing conditions where inadequate right of way exists to use Standard Drawing G-28, and are not to be used in new construction.
2. See Standard Drawing G-32 for general notes.
3. Landing cross slope shall be 2.0% max. in both directions.
4. For truncated domes, please see Standard Drawing G-30.
5. CT Curve Transition slope shall be 8.33% maximum.

Revision	By	Approved	Date
ORIGINAL		R. Munoz	5/97
Add Metric		T. Stanton	03/03
UPDATE		D. Davies	12/04
Revised		T. Stanton	04/06

SAN DIEGO REGIONAL STANDARD DRAWING

CURB RAMP - TYPE C
(FOR EXISTING SIDEWALK)

RECOMMENDED BY THE SAN DIEGO REGIONAL STANDARDS COMMITTEE

T. Stanton 12-09-2004

Chairperson R.C.E. 19246 Date

DRAWING NUMBER G-29

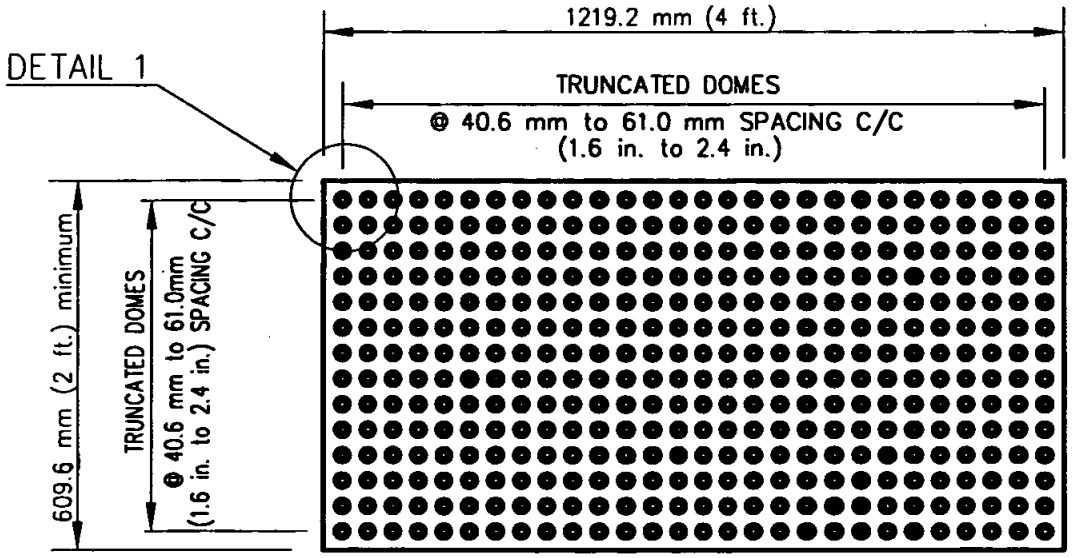

PLAN – TILE

NOT TO SCALE

NOTES

1. Detectable warning surface color shall be yellow conforming to federal standards 595B Table IV, color No. 33538, or as specified by the agency. Color shall be homogeneous throughout the tile.
2. Truncated dome top diameter of 50% of the base diameter minimum to 65% of the base diameter maximum.
3. During and after the tile installation and the concrete curing stage, it is imperative that there is no walking, leaning or external forces placed on the tile to rock the tile, causing a void between the underside of tile and concrete.

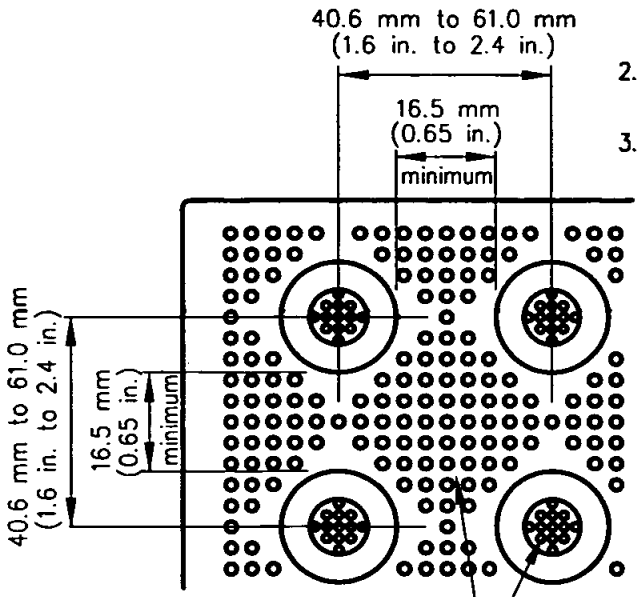

DETAIL 1

NOT TO SCALE

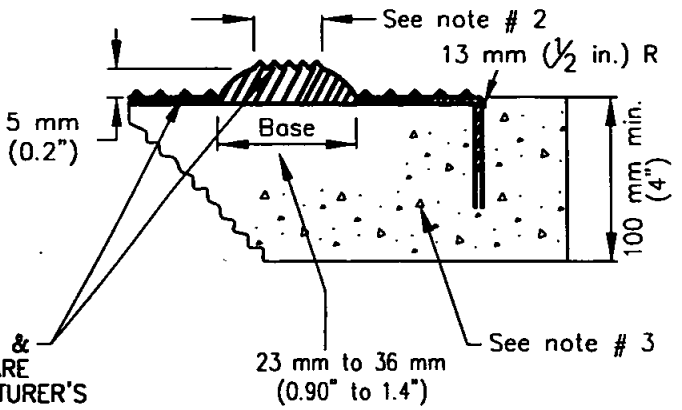

NOTE:
PATTERN, SIZE & ORIENTATION ARE PER MANUFACTURER'S RECOMMENDATION

Revision	By	Approved	Date
ORIGINAL		D. Davies	12/04

SAN DIEGO REGIONAL STANDARD DRAWING

TRUNCATED DOMES

RECOMMENDED BY THE SAN DIEGO REGIONAL STANDARDS COMMITTEE

3/01/2003

Chairperson R.C.E. 19246 Date

DRAWING NUMBER G-30

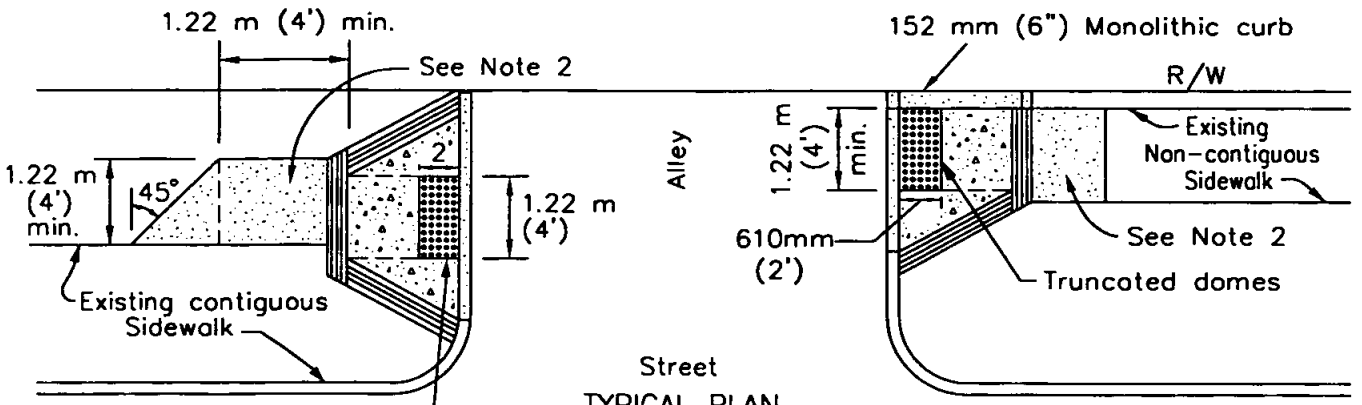

TYPICAL PLAN

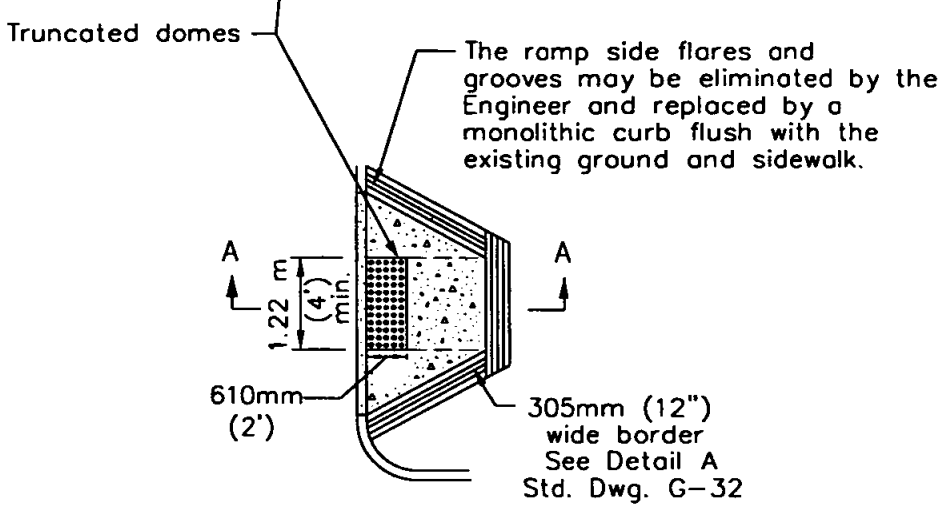

PLAN VIEW

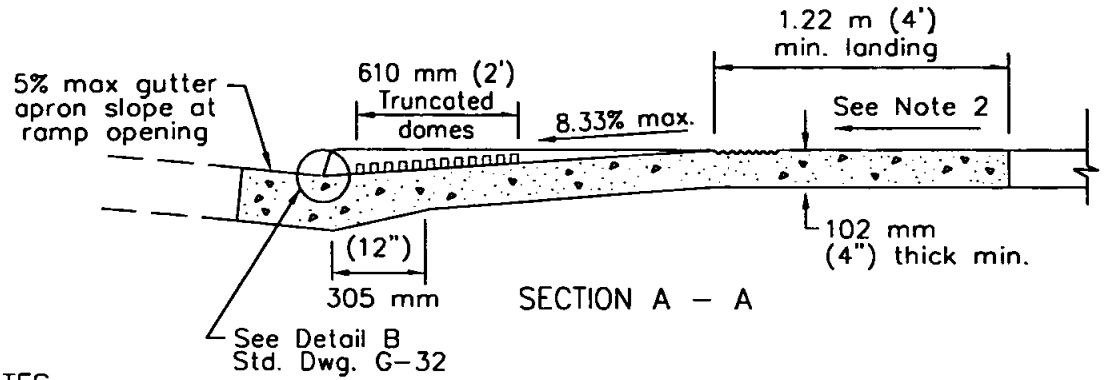

SECTION A – A

NOTES

1. See Standard Drawing G-32 for general notes.
2. Landing cross slope shall be 2.0% max. in both directions.
3. For truncated domes details, see Standard Drawing G-30.

Revision	By	Approved	Date
ORIGINAL		G.Parkinson	2/95
Add Metric		T. Stanton	03/03
UPDATE		D. Davies	12/04
Revised		T. Stanton	04/06

SAN DIEGO REGIONAL STANDARD DRAWING

CURB RAMP - TYPE D

RECOMMENDED BY THE SAN DIEGO REGIONAL STANDARDS COMMITTEE

12-09-2004

Chairperson R.C.E. 19246 Date

DRAWING NUMBER **G-31**

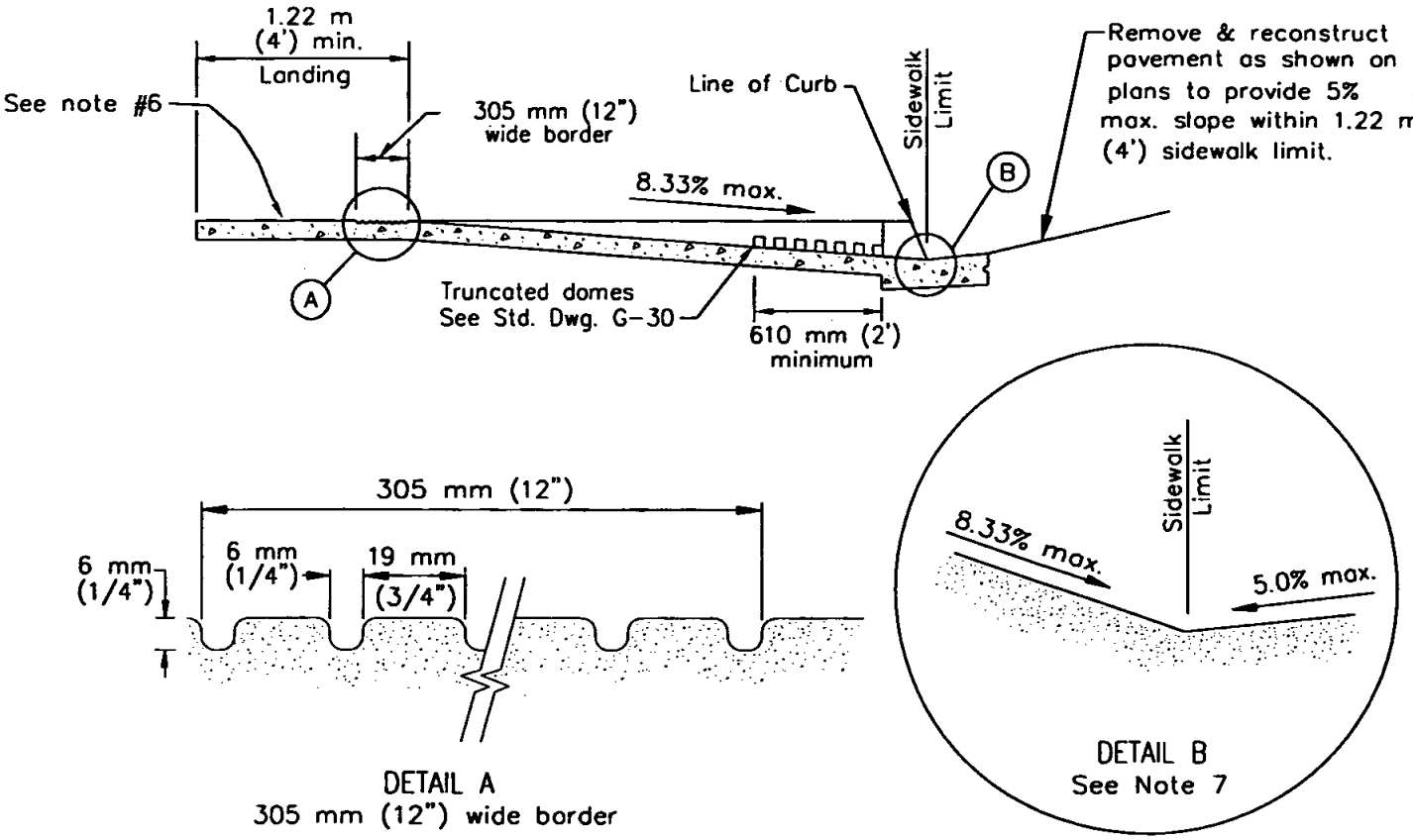

NOTES

1. The removal of existing concrete curb, gutter, sidewalk and pavement for pedestrian ramp installation shall comply with Standard Drawing G-11. For construction of Curb Ramps on existing sidewalks, removal of additional sidewalk maybe required to comply with ADA requirements to meet the existing grade.
2. Areas shown thus: shall have a medium to heavy broom texture finish, perpendicular to the axis of the ramp.
3. Areas shown thus: are the minimum required for a complete ramp installation and shall be concrete class 520-C-2500.
4. If obstructions such as inlets, utility poles, fire hydrants, etc., are encountered, the ramp locations may be adjusted upon the approval of the Resident Engineer, or Local Agency Inspector.
5. The ramp slopes will be measured relative to the sidewalk slope. Adjoining slope beyond ramp shall not exceed 20:1 (5%).
6. Landing cross slope shall be 2.0% max. in both directions.
7. All projects (new construction & alteration), the lower end of 1.22 m (48 in.) width of the ramp shall be flush and free of abrupt changes between the bottom of the ramp and the street pavement surface.
8. There shall be no more than 203.2 mm (8 in.) separation between the face of the curb and any given point on the nearest edge of the truncated domes.

Revision	By	Approved	Date
ORIGINAL		G.Parkinson	2/95
Add Metric		T. Stanton	03/03
UPDATE		D. Davies	12/04
Revised		T. Stanton	04/06

SAN DIEGO REGIONAL STANDARD DRAWING

GENERAL NOTES FOR CURB RAMPS

RECOMMENDED BY THE SAN DIEGO REGIONAL STANDARDS COMMITTEE

12-09-200

Chairperson R.C.E. 19246 Date

DRAWING NUMBER G-32

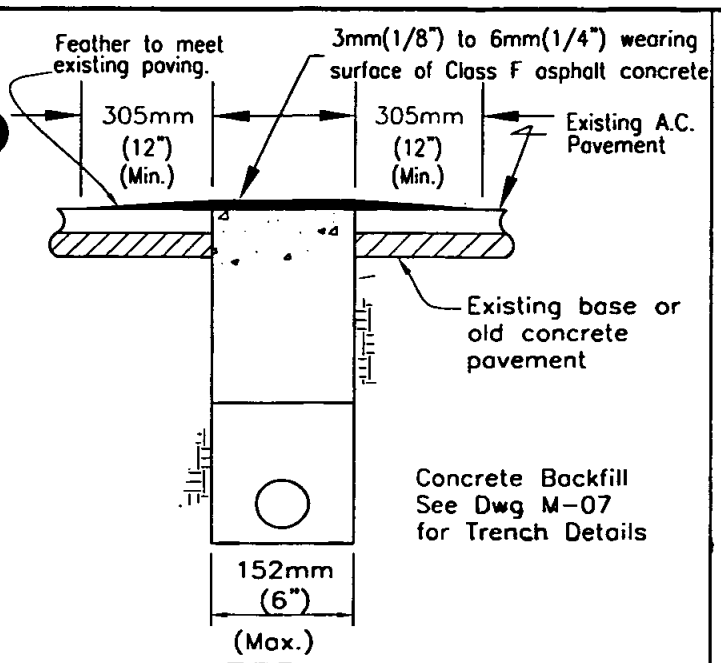

TYPE A

NOTES:

1. Concrete shall be screeded off to match pavement grade and floated to assure proper edge match.
2. A tack coat shall be applied to the concrete and existing asphalt pavement prior to placing the new asphalt pavement wearing surface.
3. Existing A.C. pavement will not require saw cutting when using rockwheel for excavation.
4. Allow concret backfill to cure for seven prior to paving operation

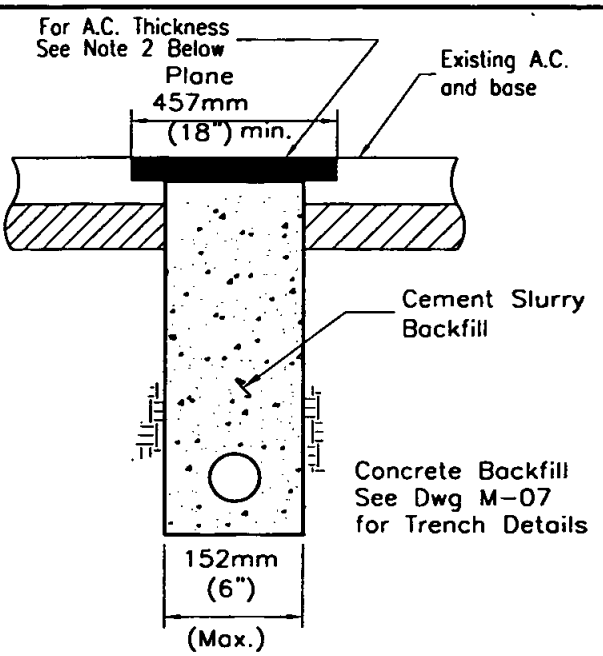

TYPE B

NOTES:

1. A tack coat shall be applied to the cement slurry backfill and existing asphalt pavement prior to placing the new asphalt surface.
2. Asphaltic Concrete Resurfacing:
   a. Allow cement slurry backfill seven days minimum to cure before planing.
   b. Thichness of Asphaltic Concrete shall be a minimum of 51mm (2") or as specified by the Agency's engineer.
   c. A.C. shall be hot mix.
3. A.C. shall be sealed or chip sealed when required by the Agency's Engineer.

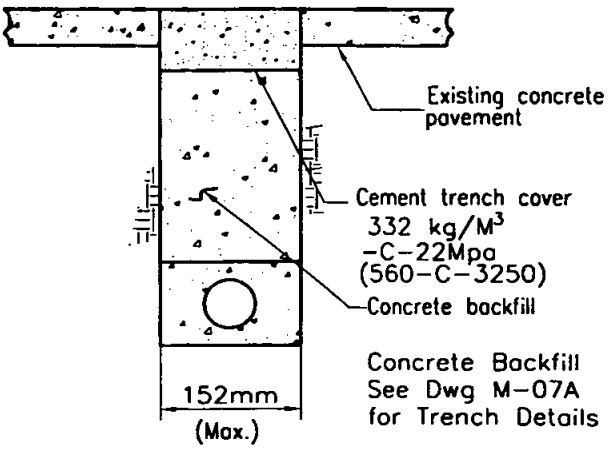

TYPE C

NOTES:

1. Concrete shall be screeded off to match existing pavement grade and floated to assure proper edge match.
2. Concrete trench cover shall be a minimum of 140mm (5 1/2") thick in alley or local residential streets and 178mm (7") thick in all other streets.
3. Existing concrete pavement will require sawcutting when using rockwheel for excavation.
4. In major or prime arterial streets, an approved set accelerating admixture, such as Calcium Chloride, may be used only with prior approval of the Agency's engineer.

Revision	By	Approved	Date
ORIGINAL	HH	T. Stanton	11/02
Add Metric		T. Stanton	03/03
Reviewed		T. Stanton	04/06

SAN DIEGO REGIONAL STANDARD DRAWING

NARROW TRENCHES TRENCHING & BACKFILLING

RECOMMENDED BY THE SAN DIEGO REGIONAL STANDARDS COMMITTEE

T. Stanton 3/01/2003

Chairperson R.C.E. 19246 Date

DRAWING NUMBER G-33

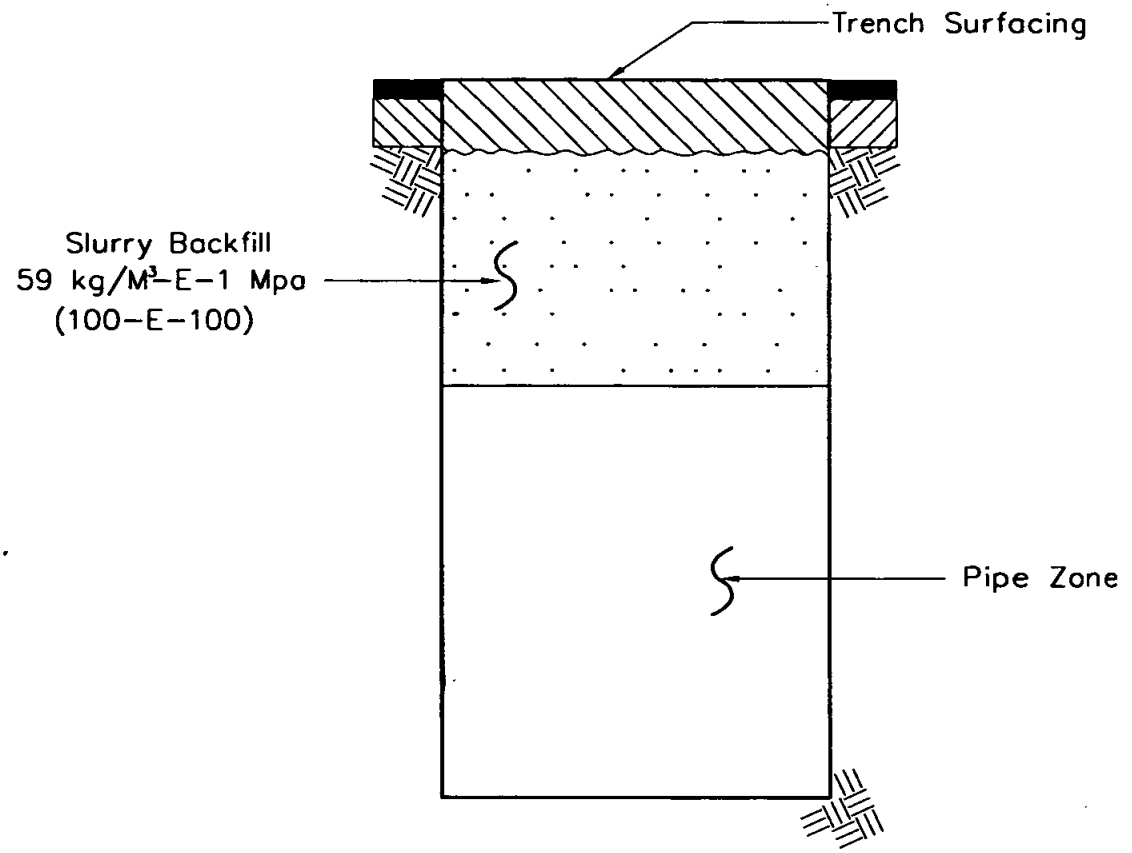

NOTES

1. Trench resurfacing shall be done according to governmental (permitting) agency's requirements.
2. The sand used for the slurry backfill shall meet the requirements for fine aggregate (subsection 400–1.3) listed in the Standard Specifications for Public Works Construction. Slurry must be firm prior to trench resurfacing.
3. Slurry backfill shall not be used where it will impede subsurface drainage.

Revision	By	Approved	Date
ORIGINAL		Parkinson	9/88
Add Metric		T. Stanton	03/03
Reviewed		T. Stanton	04/06

SAN DIEGO REGIONAL STANDARD DRAWING

SLURRY BACKFILL

RECOMMENDED BY THE SAN DIEGO REGIONAL STANDARDS COMMITTEE

T. Stanton 3/01/2003

Chairperson R.C.E. 19246 Date

DRAWING NUMBER **G-36**

SPRINKLER IRRIGATION SYSTEMS

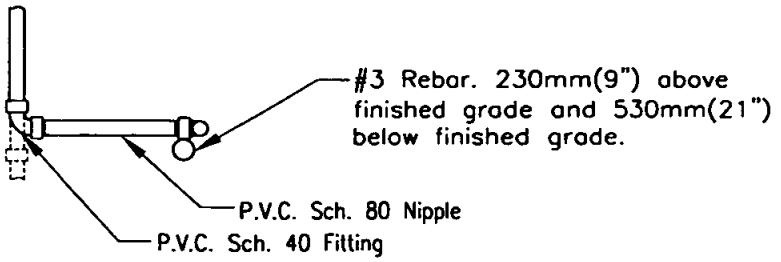

PLAN VIEW

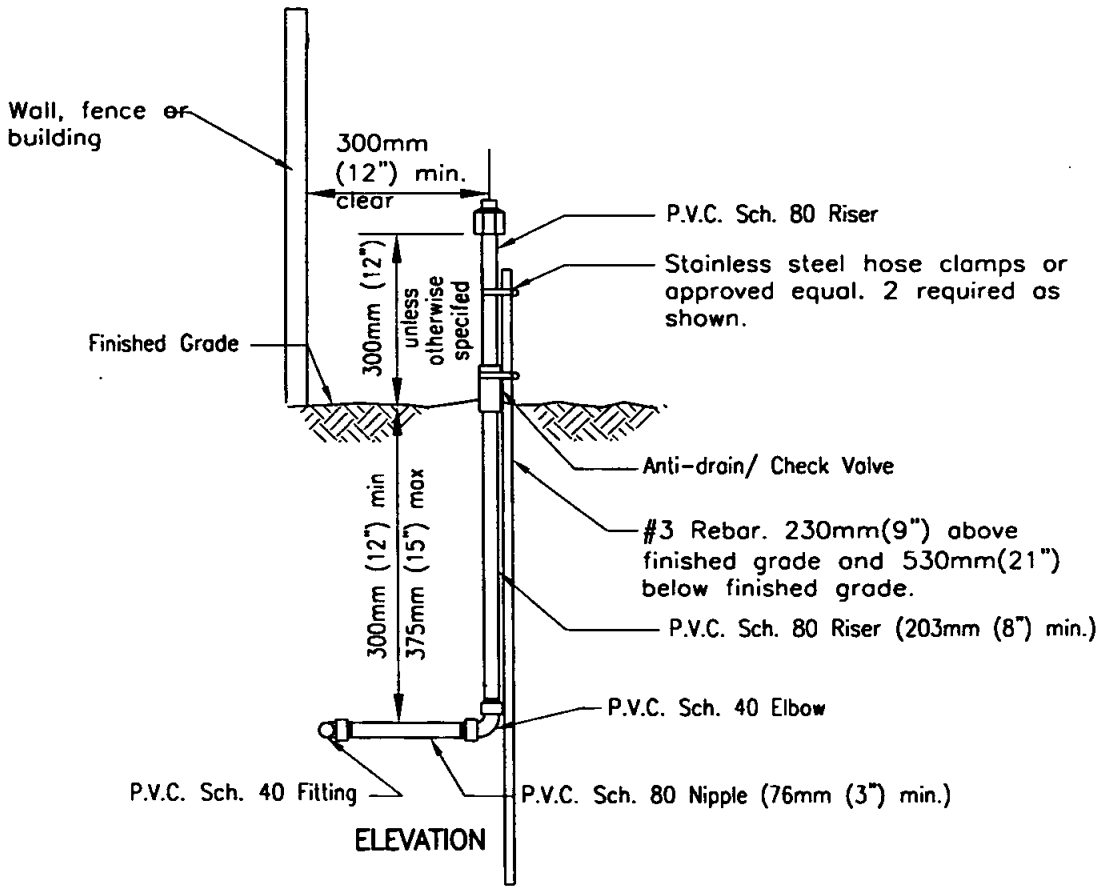

ELEVATION

NOTES

1. Teflon tape, 19mm (3/4") wide, shall be used on all threaded connections.
2. Close nipples shall not be used.
3. No fixed risers allowed in public right-of-ways or adjacent to vehicular or pedestrian traffic, unless otherwise approved by agency.

LEGEND ON PLANS

Show a number to indicate type head

Or approved agency symbol

Revision	By	Approved	Date
ORIGINAL		Kercheval	12/75
Add Metric		T. Stanton	03/03
UPDATE		M. Caro	03/04

SAN DIEGO REGIONAL STANDARD DRAWING

SHRUB SPRAY HEAD ON FIXED RISER

RECOMMENDED BY THE SAN DIEGO REGIONAL STANDARDS COMMITTEE

T. Stanton 03-25-2004

Chairperson R.C.E. 19246 Date

DRAWING NUMBER I-1

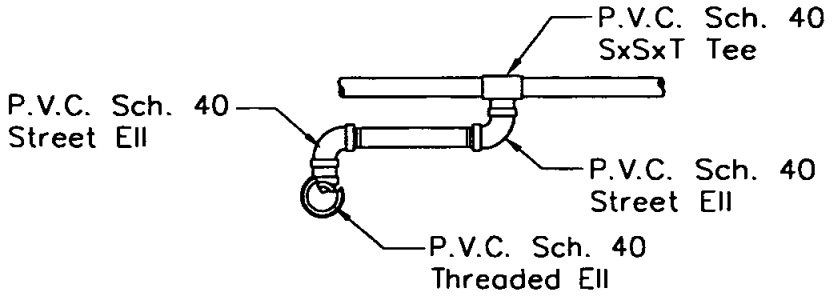

PLAN

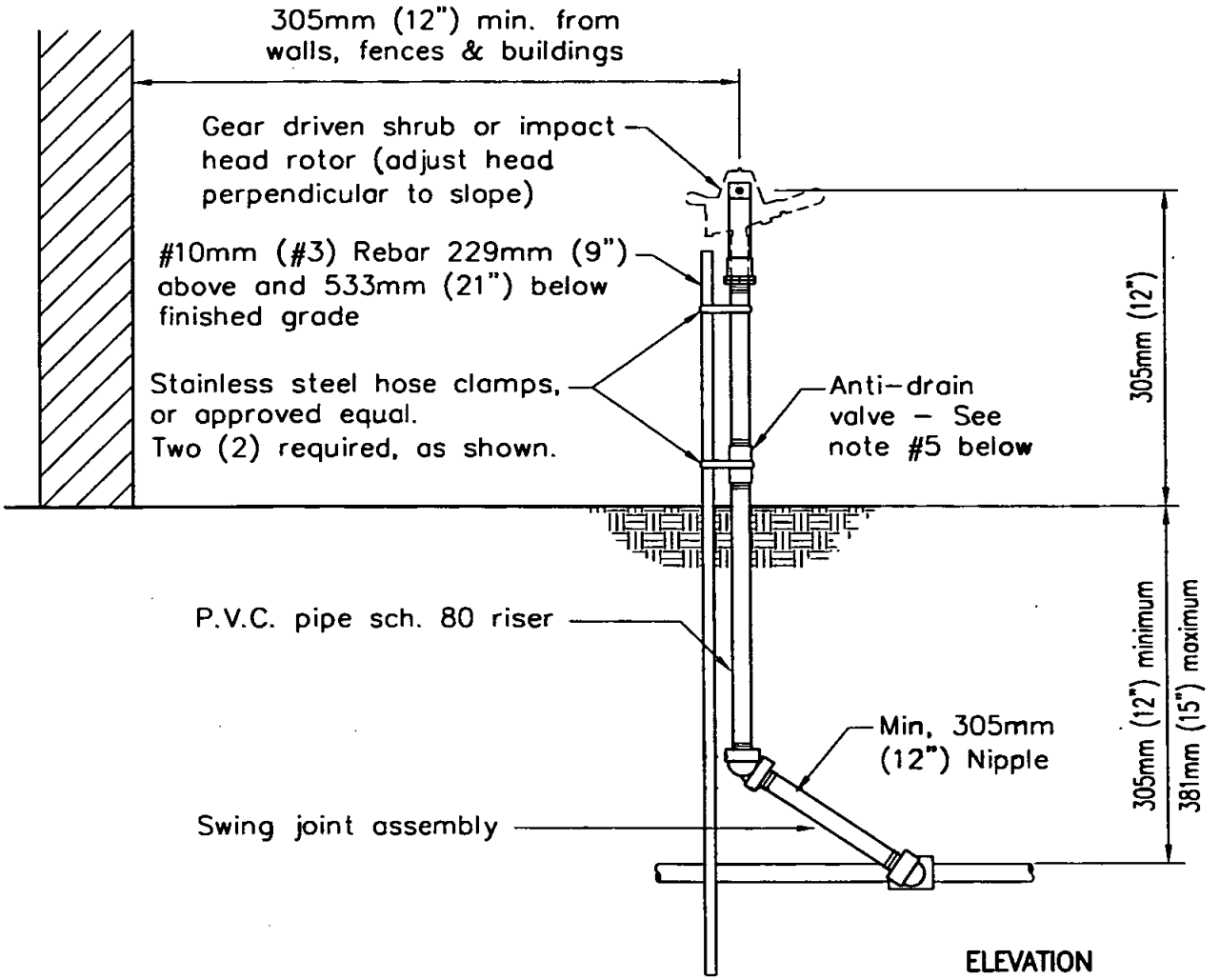

ELEVATION

NOTES

1. All fittings shall be P.V.C. Sch. 40 (except as noted).
2. All nipples shall be P.V.C. Sch. 80 (except as noted).
3. Teflon tape shall be used on all threaded connections.
4. Close nipples shall not be used.
5. Anti-drain valves shall be installed under all heads unless otherwise specified.
6. No fixed risers allowed in right-of-way or adjacent to vehicular or pedestrian traffic unless otherwise approved by agency.

LEGEND ON PLANS

Show a number to indicate head type — Or approved agency symbol.

Revision	By	Approved	Date
ORIGINAL		Parkinson	5/92
Add Metric		T. Stanton	03/03
UPDATE		M. Caro	06/04

SAN DIEGO REGIONAL STANDARD DRAWING

ROTOR OR IMPACT HEAD ON FIXED RISER

RECOMMENDED BY THE SAN DIEGO REGIONAL STANDARDS COMMITTEE

T. Stanton 06/24/2004

Chairperson R.C.E. 19246 Date

DRAWING NUMBER **I-2**

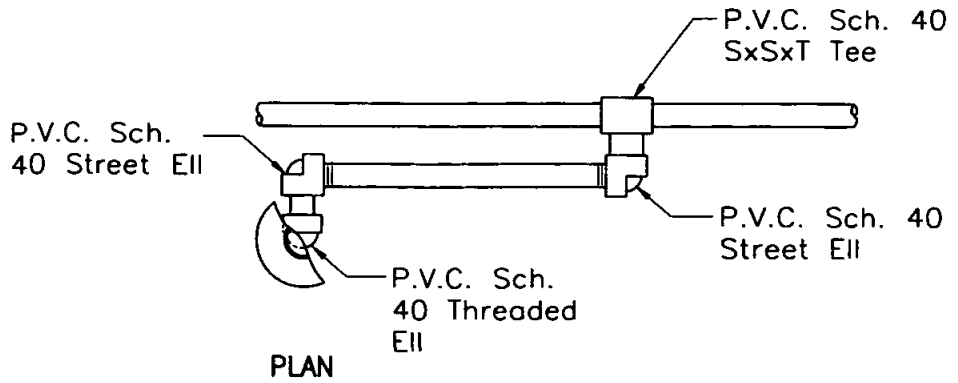

PLAN

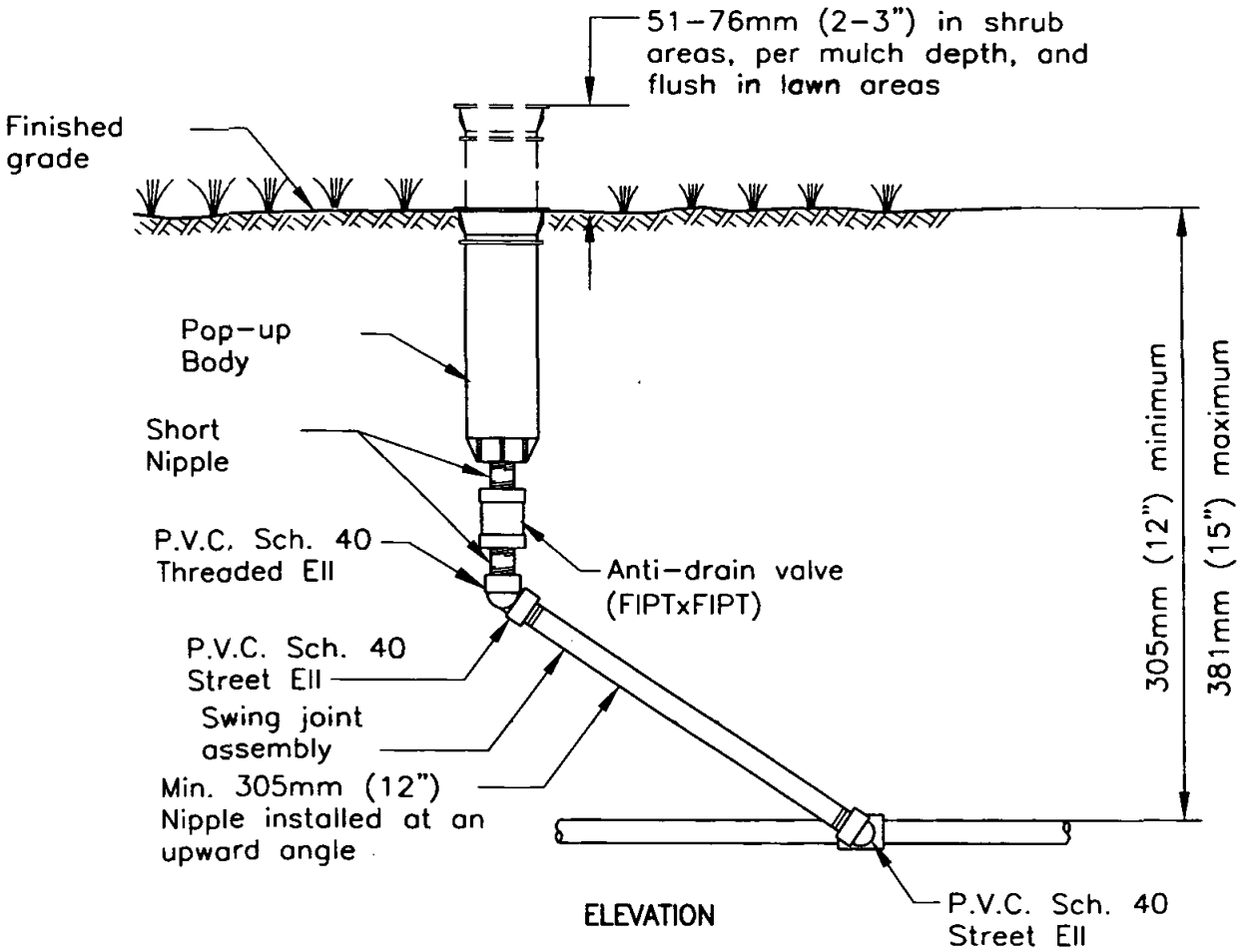

ELEVATION

NOTES

1. All fittings shall be P.V.C. Schedule 40.
2. All nipples shall be P.V.C. Schedule 80.
3. Teflon tape shall be used on all threaded connections.
4. Close nipples shall not be used.
5. Lateral depth shall be 457mm (18") when 305mm (12") pop–up bodies are used.

LEGEND ON PLANS

Show a number to indicate type head or approved agency symbol

Revision	By	Approved	Date
ORIGINAL		Kercheval	12/75
Add Metric		T. Stanton	03/03
UPDATE		M. Caro	06/04

SAN DIEGO REGIONAL STANDARD DRAWING

ROTOR OR SPRAY POP-UP HEAD

RECOMMENDED BY THE SAN DIEGO REGIONAL STANDARDS COMMITTEE

T. Stanton 06/24/2004

Chairperson R.C.E. 19246 Date

DRAWING NUMBER I-3

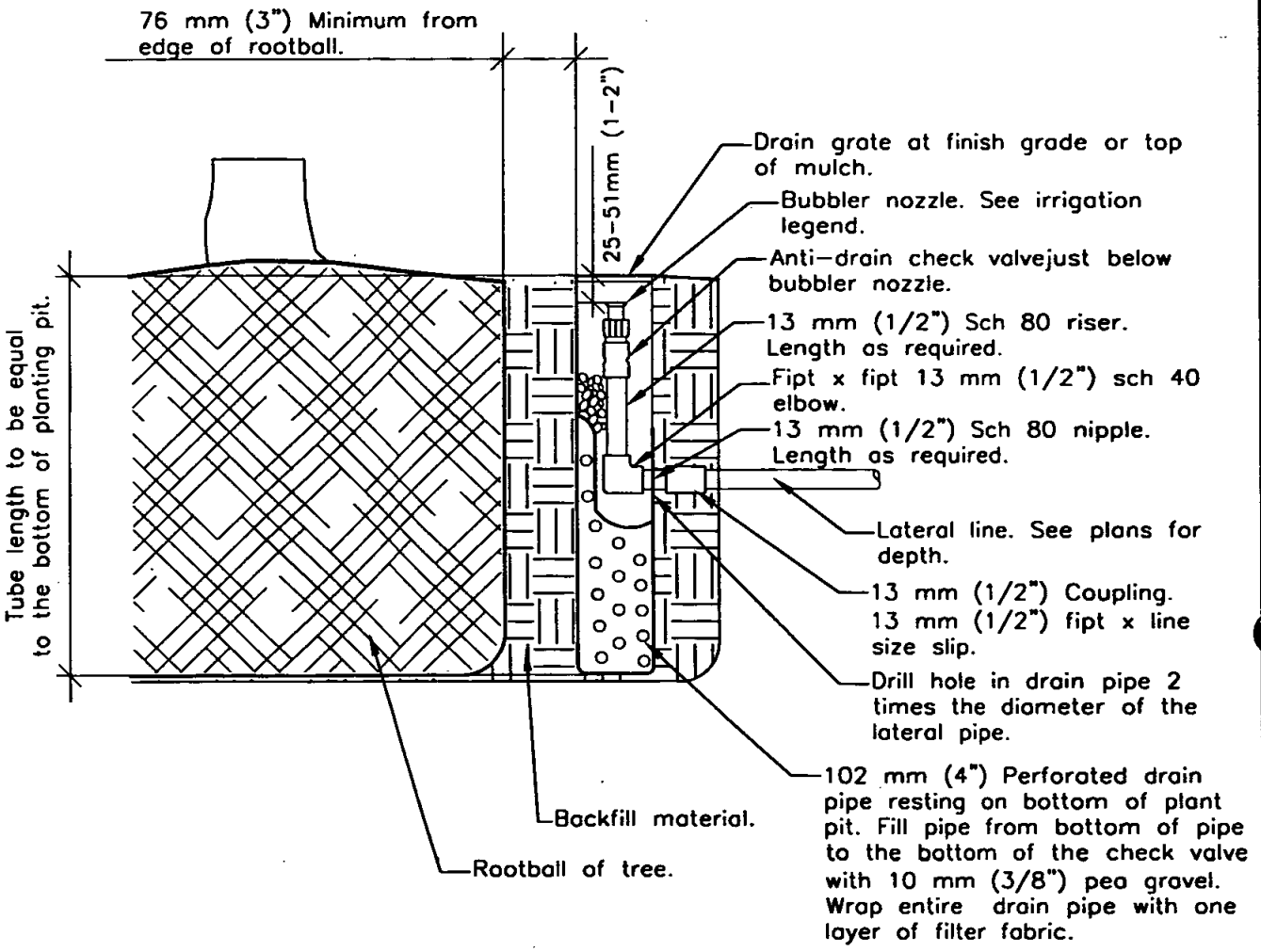

NOTES

1. Refer to the planting plans and appropriate details for plant material and installation procedures.

Revision	By	Approved	Date
ORIGINAL		M. Caro	02/05

SAN DIEGO REGIONAL STANDARD DRAWING

DEEP ROOT TREE BUBBLER

RECOMMENDED BY THE SAN DIEGO REGIONAL STANDARDS COMMITTEE

02/24/2005

Chairperson R.C.E. 19246 Date

DRAWING NUMBER I-4

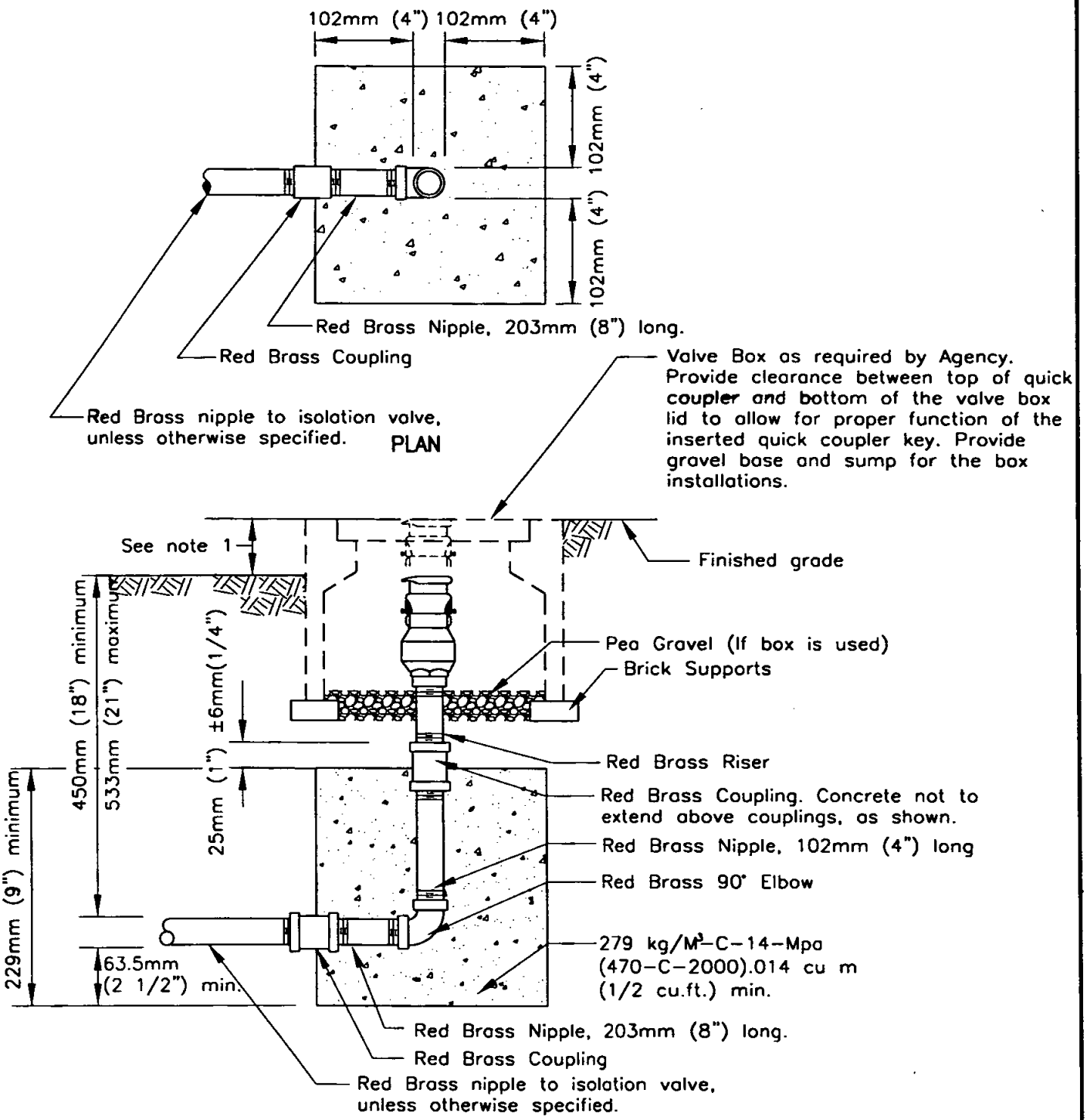

NOTES

1. Quick coupling valves or boxes shall be set flush in lawn and 51-76mm (2-3") above finish grade in shrub/ groundcover areas, per mulch depth
2. Dimensions of concrete anchors are minimum.
3. Close nipples shall not be used.
4. Provide appropriate key and swivel adapter as specified on plans.

LEGEND ON PLANS

QCV ◉

Revision	By	Approved	Date
ORIGINAL		Kercheval	12/75
Add Metric		T. Stanton	03/03
UPDATE		M. Caro	05/04

SAN DIEGO REGIONAL STANDARD DRAWING

QUICK COUPLING VALVE

RECOMMENDED BY THE SAN DIEGO REGIONAL STANDARDS COMMITTEE

05-27-2004

Chairperson R.C.E. 19246 Date

DRAWING NUMBER **I-5**

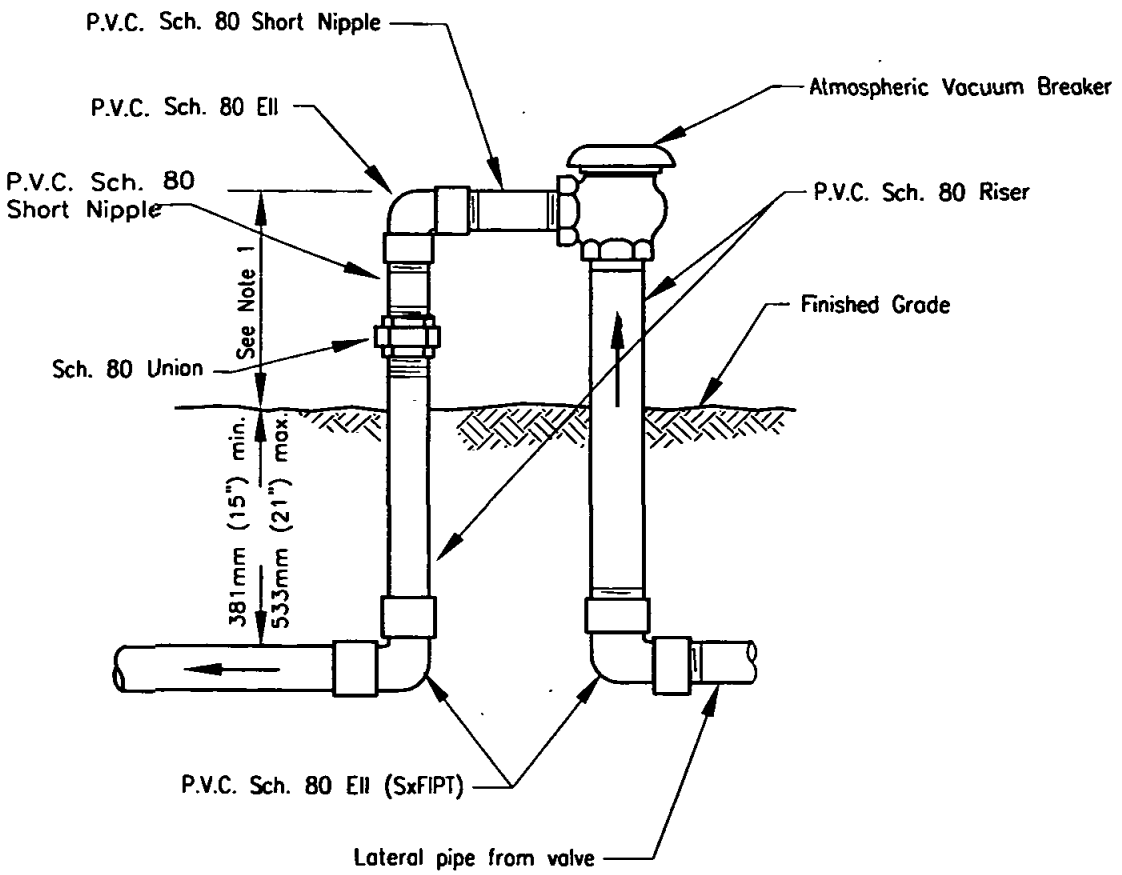

NOTES

1. Atmospheric vacuum breakers shall be installed a minimum of 305mm (12") above the highest sprinkler head so that at no time will it be subjected to
2. back pressure or drainage.
3. Close nipples shall not be used.
4. Teflon tape shall be used on all threaded connections. For use on lines 51mm (2") inches and smaller.

LEGEND ON PLANS

✓

Or approved agency symbol

Revision	By	Approved	Date
ORIGINAL		Kercheval	12/75
Add Metric		T. Stanton	03/03
UPDATE		M. Caro	02/05

SAN DIEGO REGIONAL STANDARD DRAWING

ATMOSPHERIC VACUUM BREAKER (50mm (2") & SMALLER)

RECOMMENDED BY THE SAN DIEGO REGIONAL STANDARDS COMMITTEE

02/24/2005

Chairperson R.C.E. 19246 Date

DRAWING NUMBER I-7

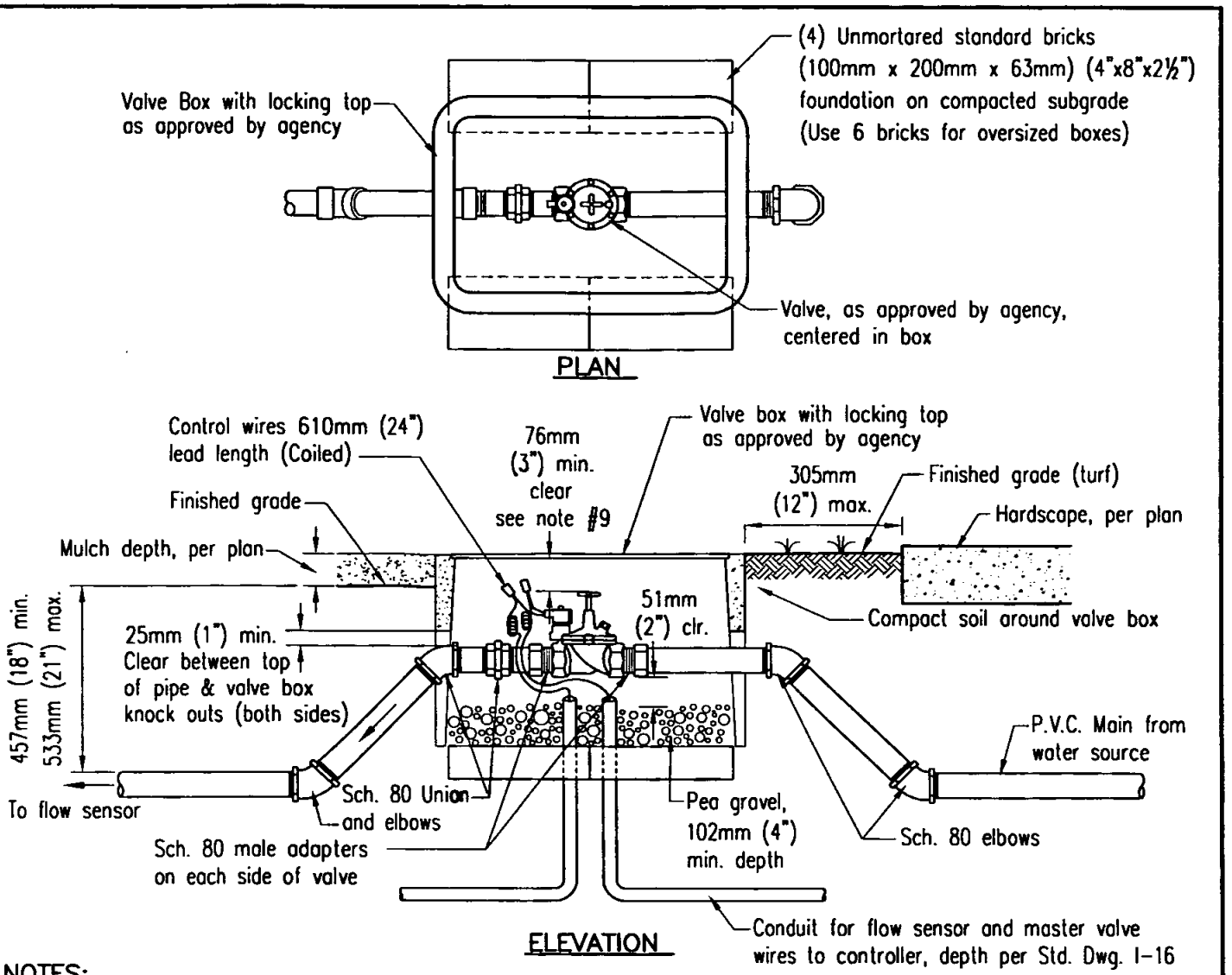

NOTES:

1. Splicing shall be made in valve boxes and pull boxes only. See Standard Drawing I-15 for splice/soldering notes.
2. All splices shall be made with a properly set mechanical splice connector entirely enclosed in self-curing resin and shall be completely water-proof.
3. Duct seal conduit openings per agency requirements.
4. All PVC pipe used in master valve assembly shall be of the same class as specified for the mainline.
5. Conduit shall be 25mm (1") min. or as approved by agency.
6. Valve/controller identification shall be labeled on the valve box and tagged on the valve per agency requirements.
7. Knock outs shall not be enlarged unless approved by agency.
8. Install only one valve per box.
9. 76mm (3") min. clear from bottom of box lid to highest point of valve assembly.
10. Valve boxes shall be set perpendicular to hardscape, a max. 305mm (12") from edge of hardscape, 51-76mm (2-3") above finished grade in shrub/groundcover areas, per mulch depth. If necessary to be set in turf, valve boxes shall be set flush with finished grade.
11. Close nipples shall not be used.

LEGEND ON PLANS

▼ M.V.

Or approved agency symbol.

Revision	By	Approved	Date
ORIGINAL		Kercheval	12/75
Add Metric		T. Stanton	03/03
UPDATE		M. Caro	04/05

SAN DIEGO REGIONAL STANDARD DRAWING

IRRIGATION MASTER VALVE

RECOMMENDED BY THE SAN DIEGO REGIONAL STANDARDS COMMITTEE

T. Stanton 04/28/2005

Chairperson R.C.E. 19246 Date

DRAWING NUMBER I-10

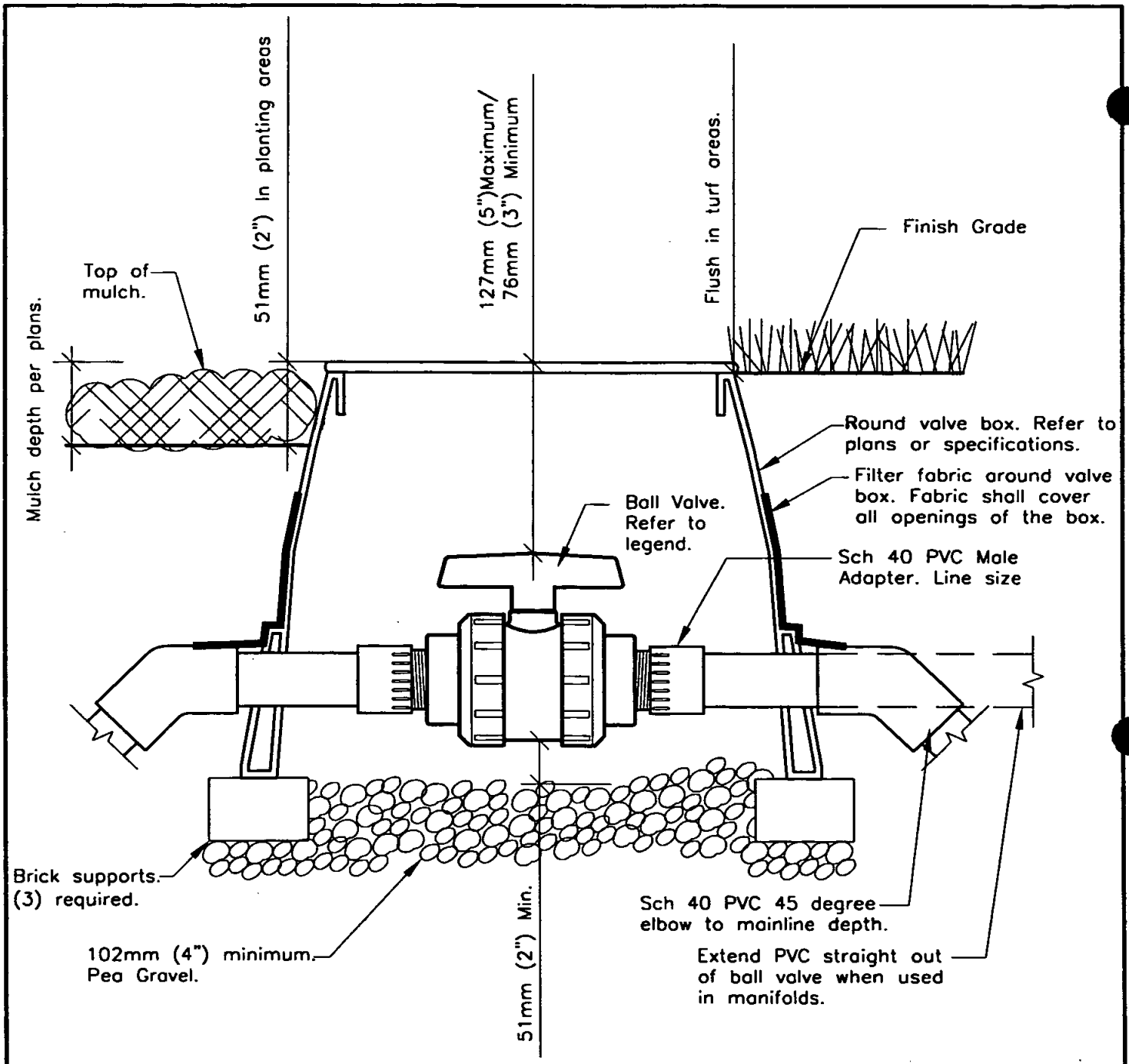

NOTES

1. Teflon tape, 19mm (3/4") wide, shall be used on all threaded connections.
2. Close nipples shall not be used.
3. All PVC Pipe used in manifold assemblies shall of the same class as specified for the mainline.
4. All plastic valve boxes shall be heat branded with the appropriate identification. Refer to plans and specifications.
5. Do not cut additional holes in valves boxes.
6. Add single unions on each side of valve when True Union ball valves are not used.

Revision	By	Approved	Date
ORIGINAL		Kercheval	12/75
Add Metric		T. Stanton	03/03
UPDATE		M. Caro	02/05

SAN DIEGO REGIONAL STANDARD DRAWING

ISOLATION BALL VALVE 50mm (2") AND SMALLER

RECOMMENDED BY THE SAN DIEGO REGIONAL STANDARDS COMMITTEE

T. Stanton 02/24/2005

Chairperson R.C.E. 19246 Date

DRAWING NUMBER I-11

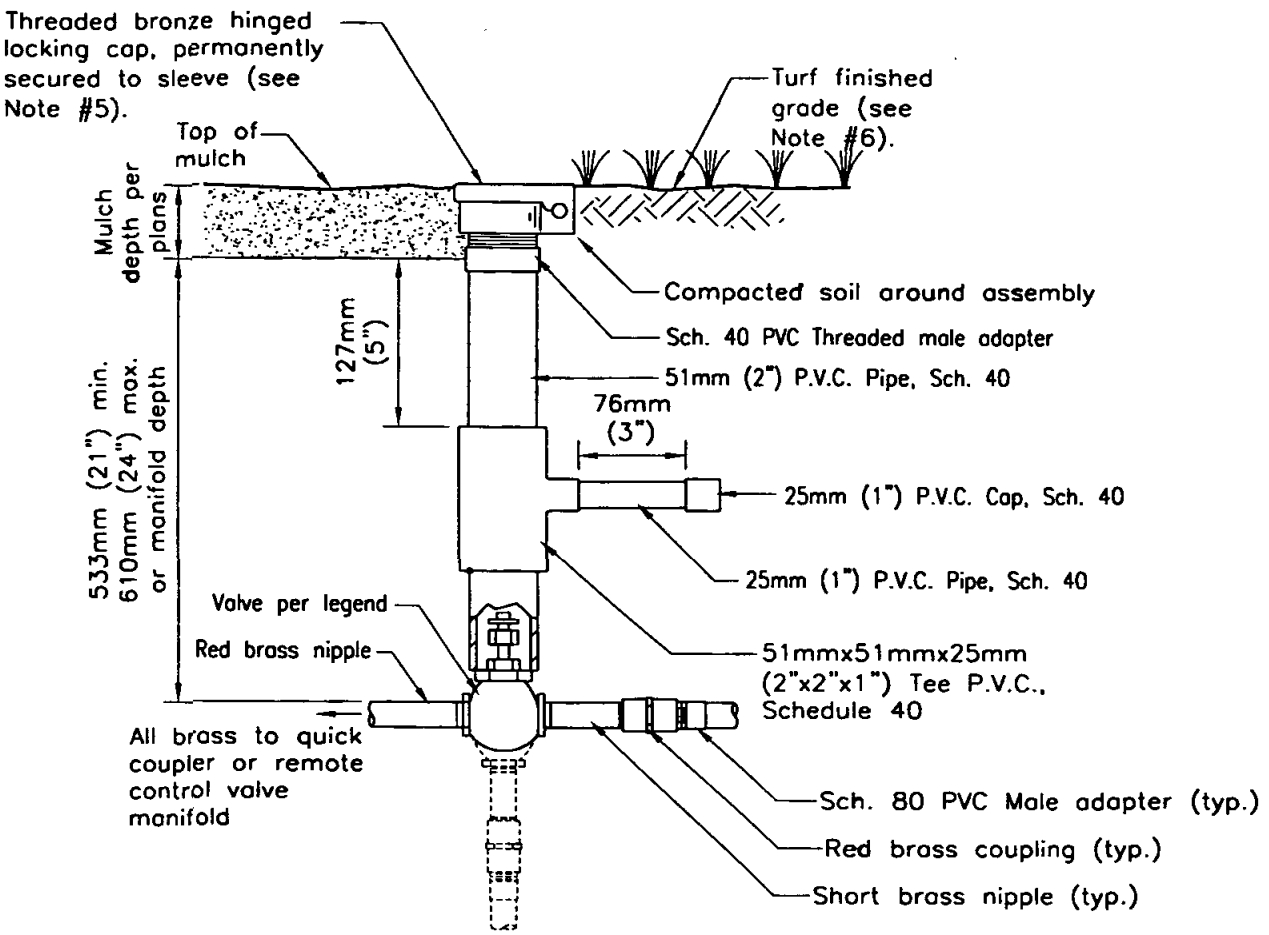

NOTES

1. All Globe Valves shall be furnished with a standard manual control valve bronze cross handle, centered in pipe sleeve.
2. All valves shall be installed within 305mm (12") of hardscape, unless otherwise shown on the plans.
3. All Globe Valves shall be furnished with a removable bonnet and packing gland nut.
4. Close Nipples shall not be used.
5. Locking cap shall be mounted flush with finish grade in turf areas and 51–76mm (2–3") above finish grade in shrub
6. areas, per depth of mulch.
   Locate outside of turf when possible.

LEGEND ON PLANS

GV

Revision	By	Approved	Date
ORIGINAL		A.Kercheval	12/75
Add Metric		T. Stanton	03/03
UPDATE		M. Caro	02/05

SAN DIEGO REGIONAL STANDARD DRAWING

ISOLATION GLOBE VALVE 50mm (2") AND SMALLER

RECOMMENDED BY THE SAN DIEGO REGIONAL STANDARDS COMMITTEE

T. Stanton 02/24/2005

Chairperson R.C.E. 19246 Date

DRAWING NUMBER I-13

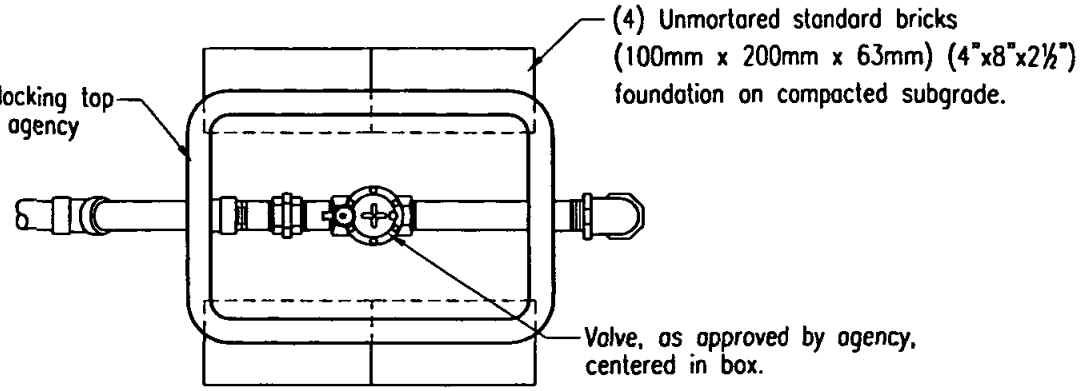

PLAN

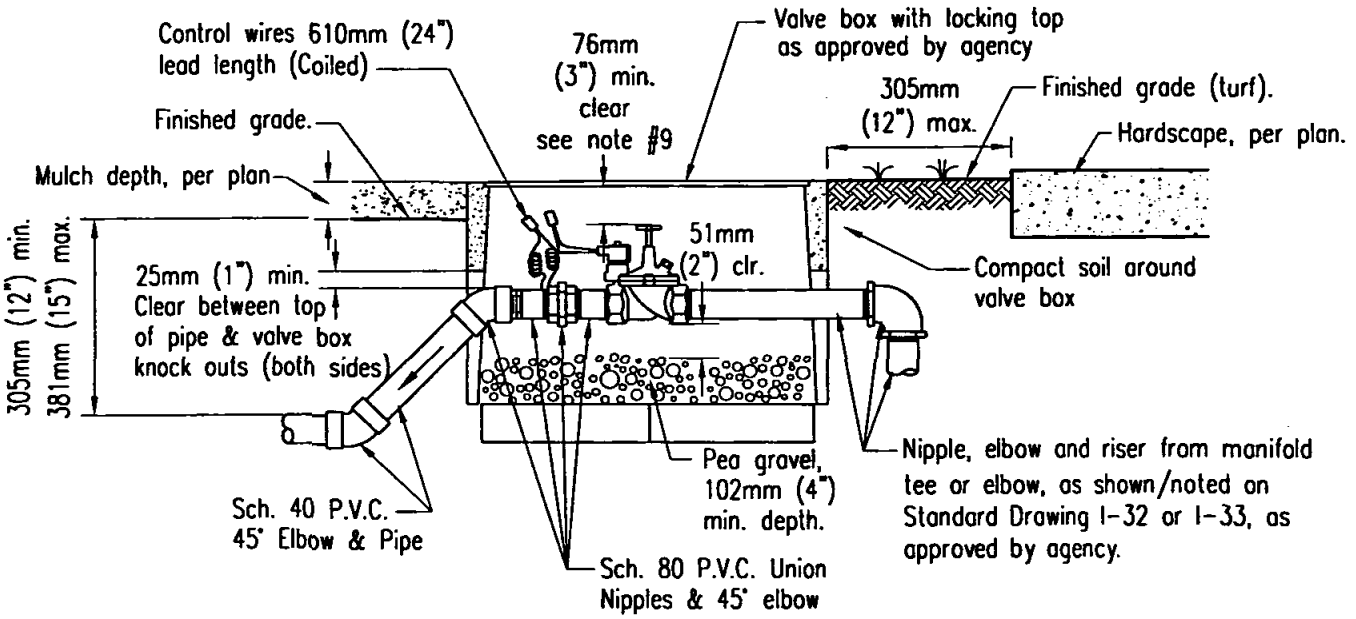

ELEVATION

NOTES:

1. Splicing shall be made in valve boxes and pull boxes only. See Standard Drawing I-15 for splice/soldering notes.
2. All splices shall be made with a properly set mechanical splice connector entirely enclosed in self-curing resin and shall be completely water-proof.
3. Spare wires terminating in valve boxes shall have their ends insulated, the same as for a splice.
4. When two or more valves are installed in the same location, see Standard Drawing I-32 or I-33, per agency standards.
5. All valves shall be installed with a union on the downstream side of the valve. The union shall be Sch. 80 P.V.C.
6. Valve/controller identification shall be labeled on the valve box and tagged on the valve per agency requirements.
7. Knock outs shall not be enlarged unless approved by agency.
8. Install only one valve per box.
9. 76mm (3") min. clear from bottom of box lid to highest point of valve assembly.
10. Valve boxes shall be set perpendicular to hardscape, a max. 305mm (12") from edge of hardscape, 51-76mm (2-3") above finished grade in shrub/groundcover areas, per mulch depth. If necessary to be set in turf, valve boxes shall be set flush with finished grade.
11. Close nipples shall not be used.

LEGEND ON PLANS

▼ R.C.V

Or approved agency symbol.

Revision	By	Approved	Date
ORIGINAL		R.Munoz	3/97
Add Metric		T. Stanton	03/03
UPDATE		M. Caro	04/05

SAN DIEGO REGIONAL STANDARD DRAWING

REMOTE CONTROL VALVE

RECOMMENDED BY THE SAN DIEGO REGIONAL STANDARDS COMMITTEE

04/28/2005

Chairperson R.C.E. 19246 Date

DRAWING NUMBER I-14

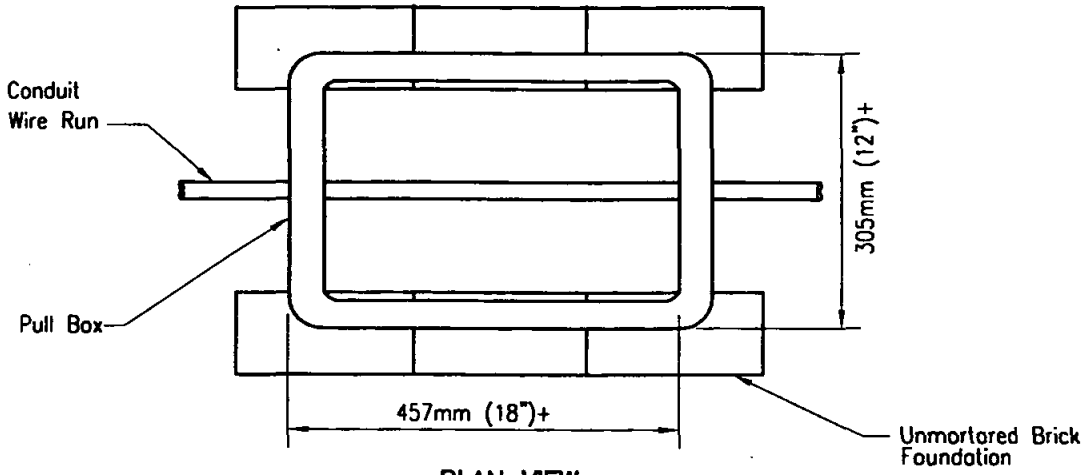

PLAN VIEW

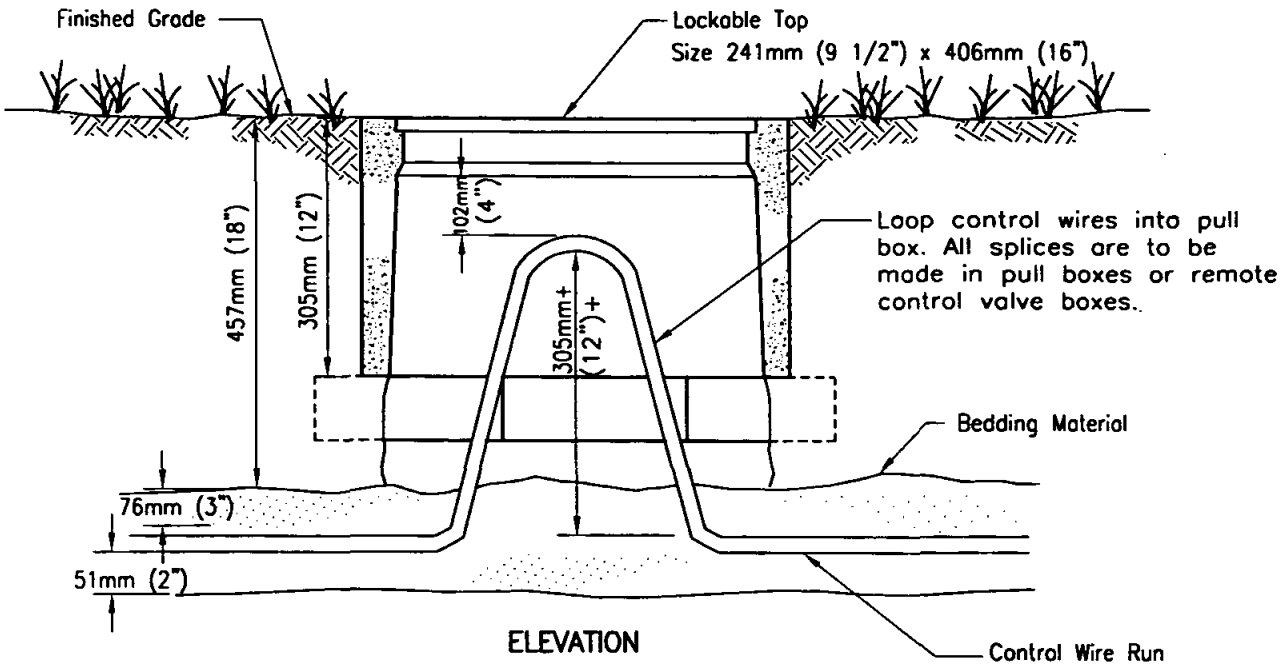

ELEVATION

NOTES

1. Install pull boxes as shown on plans.
2. At junctions where runs combine, splice common ground in pull box.
3. Pull box cover shall be permanently marked "ELECTRIC".
4. Conductors for each controller clock shall be harnessed separately and at sufficient intervals to maintain a definite bundle.
5. All splices shall be made with a properly set mechanical splice connector entirely enclosed in self-curing resin and shall be completely water-proof.
6. All spare wire ends shall be insulated in the same manner as wire splices.
7. If specified, all splices shall be soldered with metallic alloy solder prior to
8. installing connectors.

Wire bundles inside pull boxes shall be at least 102mm (4") from the under side of the box cover. Minimum size pull box shall be as shown above. Larger boxes may be necessary to meet 102mm (4") clearance required.

LEGEND ON PLANS

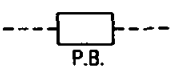

Revision	By	Approved	Date
ORIGINAL		A.Kercheval	12/75
Add Metric		T. Stanton	03/03

SAN DIEGO REGIONAL STANDARD DRAWING

ELECTRICAL PULL BOX FOR DIRECT BURIAL CONTROL WIRES AND SPLICE DETAILS

RECOMMENDED BY THE SAN DIEGO REGIONAL STANDARDS COMMITTEE

T. Stanton 3/01/2003

Chairperson R.C.E. 19246 Date

DRAWING NUMBER I-15

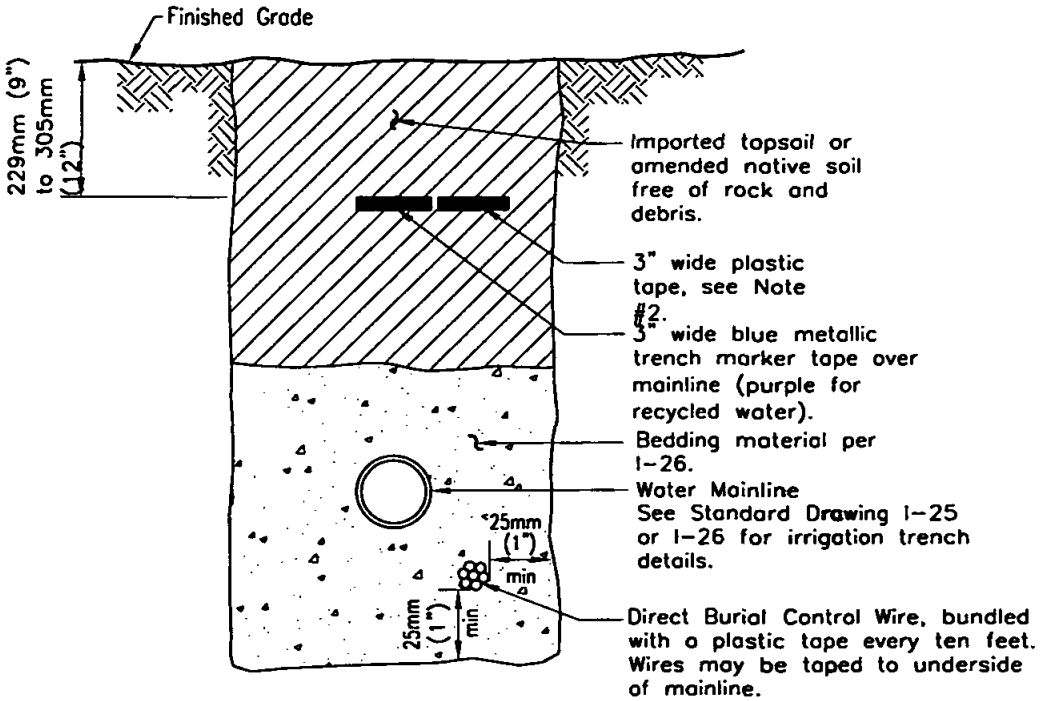

NORMAL LOCATIONS OF CONTROL WIRES

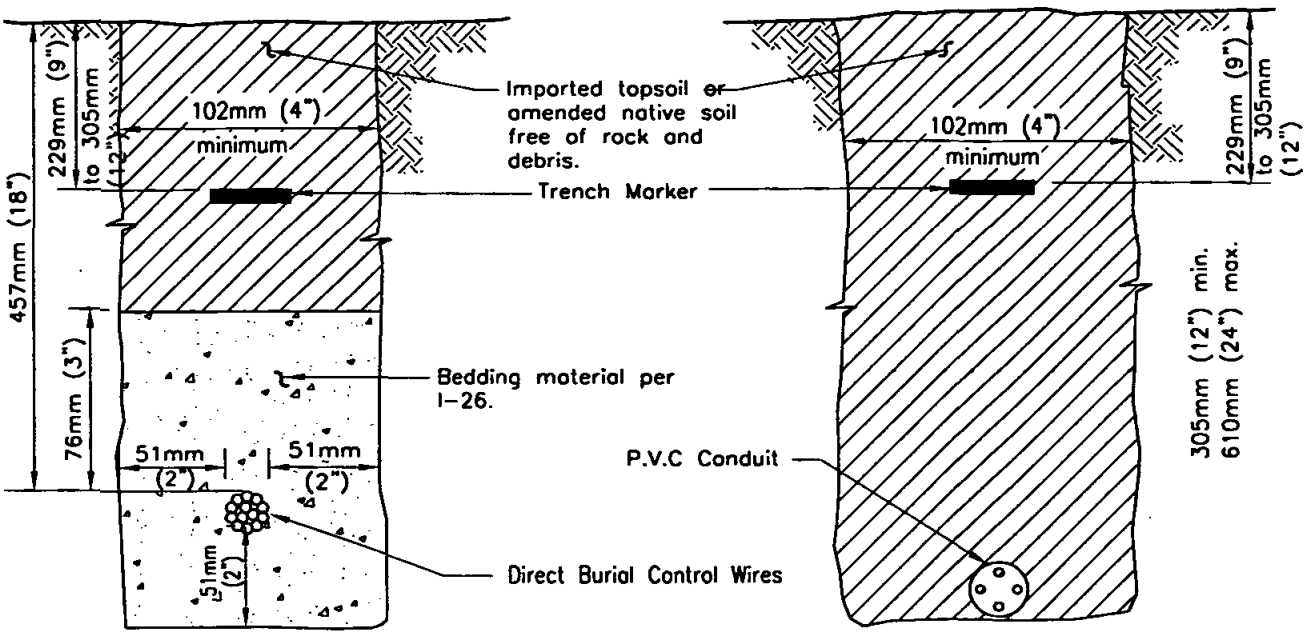

ALTERNATE LOCATION OF CONTROL WIRES

COMMUNICATION CABLE

NOTES

1. Bedding material shall be sand as approved by the agency and trench shall be
2. free of rocks.
   Place a 76mm (3") wide red continuous plastic tape trench marker, 229mm (9") to 305mm (12") below finish grade, directly above the direct burial control wires.

Revision	By	Approved	Date
ORIGINAL		Kercheval	12/75
Add Metric		T. Stanton	03/03
UPDATE		M. Caro	02/05

SAN DIEGO REGIONAL STANDARD DRAWING

CONTROL WIRE / CABLE INSTALLATION

RECOMMENDED BY THE SAN DIEGO REGIONAL STANDARDS COMMITTEE

T. Stanton 02/24/2005

Chairperson R.C.E. 19246 Date

DRAWING NUMBER I-16

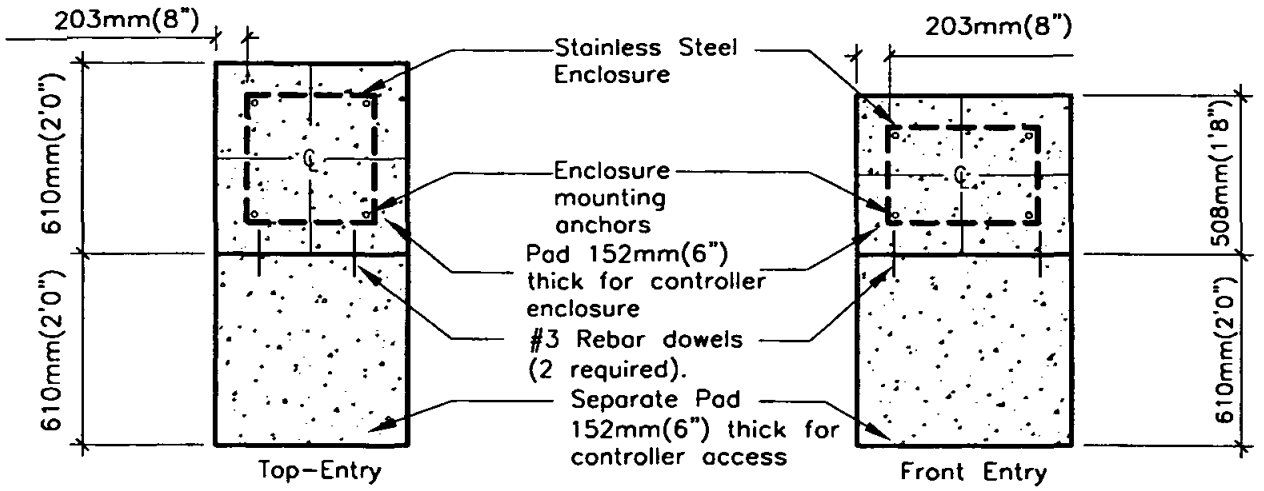

Note: All pads to slope away from controller.

PLAN VIEW (For Concrete Pads)

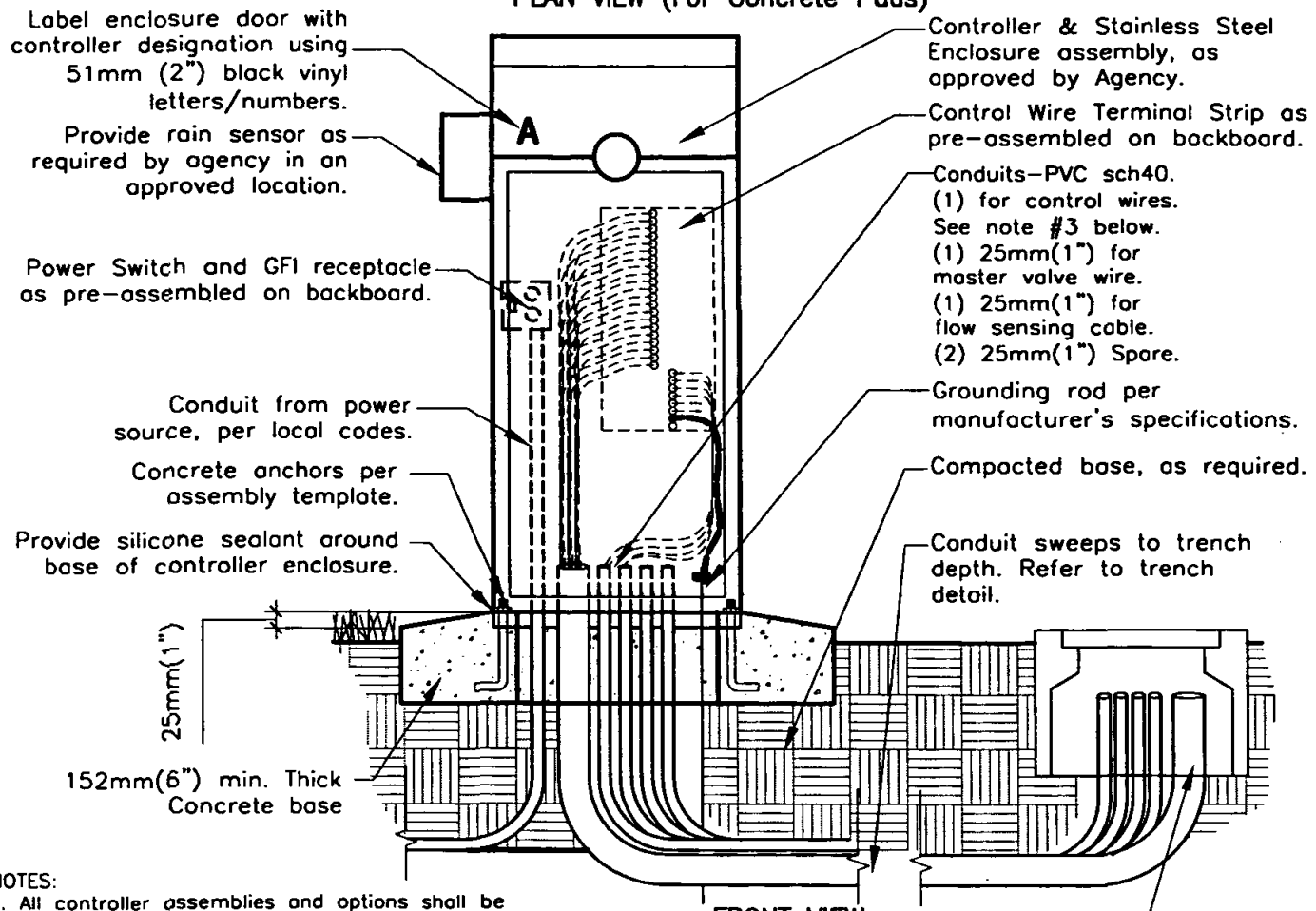

FRONT VIEW

Pull box installed within 1.5m (5') of controller enclosure, as required by agency.

NOTES:
1. All controller assemblies and options shall be completely pre-assembled in a stainless steel enclosure.
2. Pre-assembly shall include 25mm(1") rubber grommets where controller is attached to backboard.
3. Control wire conduit shall be twice the diameter of the wire bundle, 51mm(2") minimum.
4. Provide separate circuit breaker for controller(s) at electrical control panel and label.

LEGEND ON PLANS

Or approved agency symbol

Revision	By	Approved	Date
ORIGINAL		Kercheval	12/75
Add Metric		T. Stanton	03/03
UPDATE		M. Caro	05/04

SAN DIEGO REGIONAL STANDARD DRAWING

AUTOMATIC CONTROLLER PEDESTAL MOUNTED

RECOMMENDED BY THE SAN DIEGO REGIONAL STANDARDS COMMITTEE

T. Stanton 05-27-2004

Chairperson R.C.E. 19246 Date

DRAWING NUMBER 1-17

LEGEND ON PLANS

Or approved agency symbol

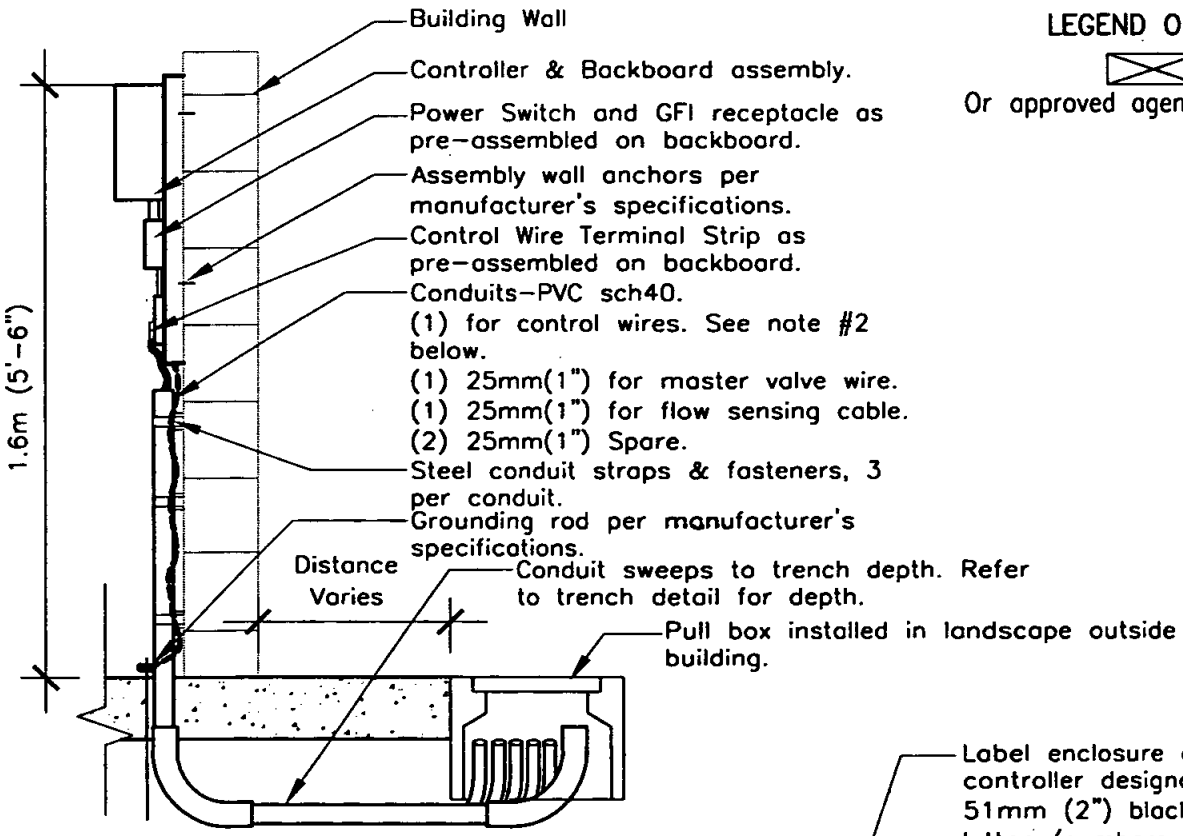

SIDE VIEW

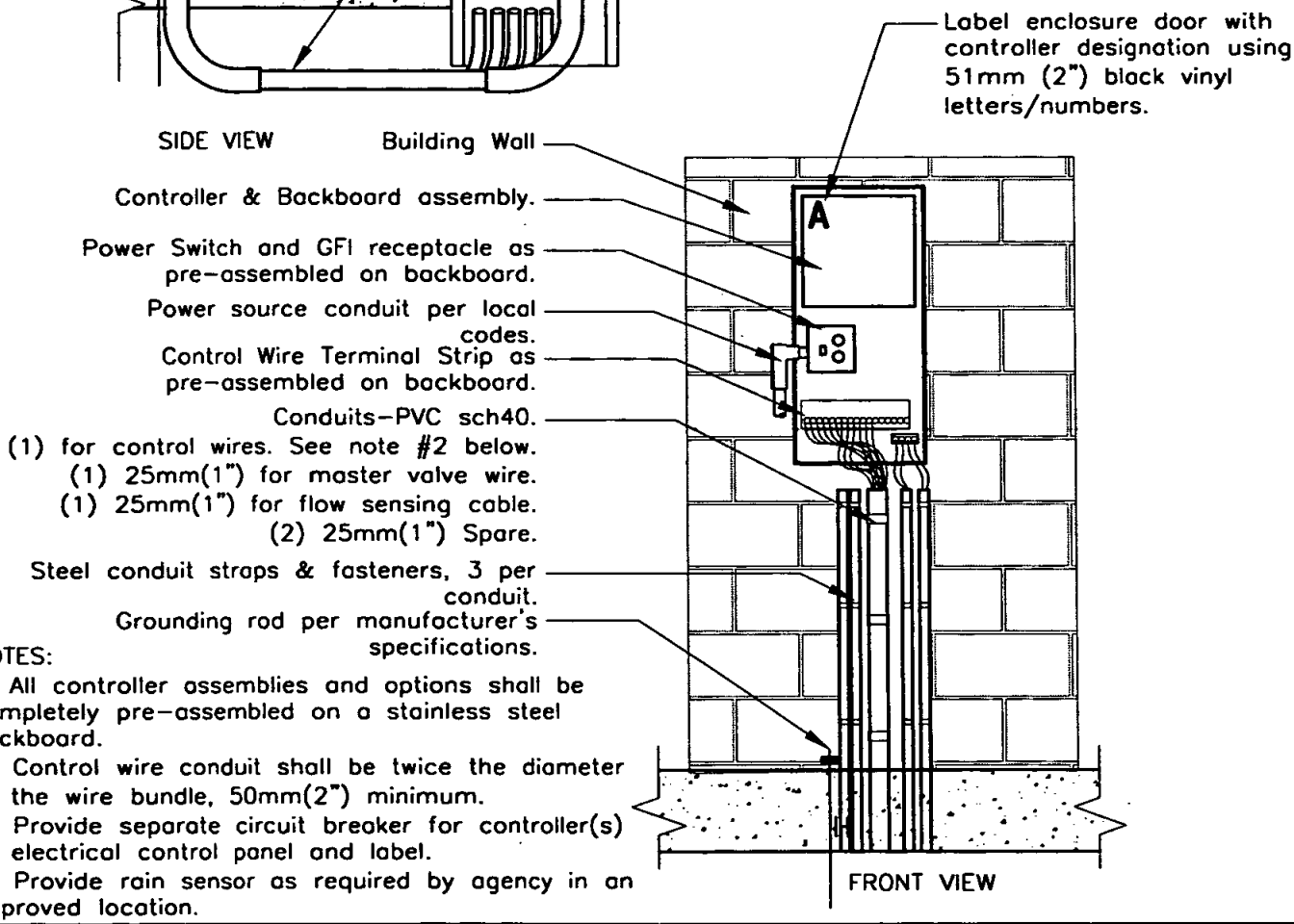

FRONT VIEW

NOTES:

1) All controller assemblies and options shall be completely pre-assembled on a stainless steel backboard.

2) Control wire conduit shall be twice the diameter of the wire bundle, 50mm(2") minimum.

3) Provide separate circuit breaker for controller(s) at electrical control panel and label.

4) Provide rain sensor as required by agency in an approved location.

Revision	By	Approved	Date
ORIGINAL		Kercheval	12/75
Add Metric		T. Stanton	03/03
UPDATE		M. Caro	05/04

SAN DIEGO REGIONAL STANDARD DRAWING

AUTOMATIC CONTROLLER INDOOR WALL MOUNT

RECOMMENDED BY THE SAN DIEGO REGIONAL STANDARDS COMMITTEE

Chairperson R.C.E. 19246 Date 05-27-200

DRAWING NUMBER I-18

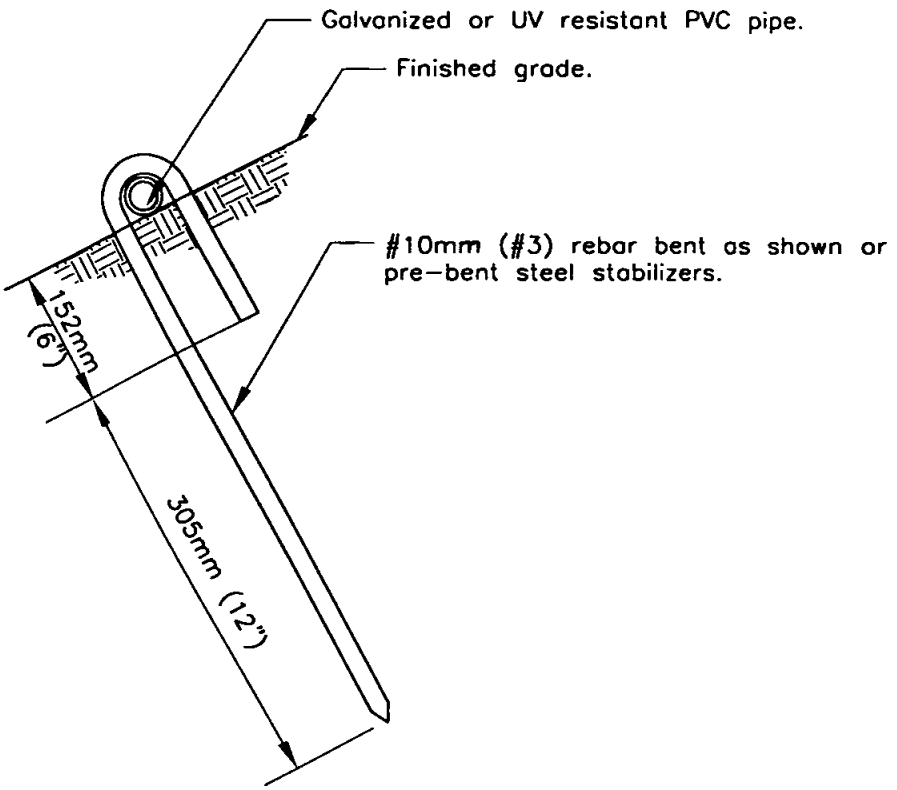

SIDE VIEW

NOTE

Stabilizers shall be placed no greater than 4.50 m (15') apart, at each riser and at all fittings.

Revision	By	Approved	Date
ORIGINAL		Kerchevol	12/75
Add Metric		T. Stanton	03/03
UPDATE		M. Caro	05/04

SAN DIEGO REGIONAL STANDARD DRAWING

ON-GRADE PIPE STABILIZATION

RECOMMENDED BY THE SAN DIEGO REGIONAL STANDARDS COMMITTEE

T. Stanton 05-27-2004

Chairperson R.C.E. 19246 Date

DRAWING NUMBER I-20

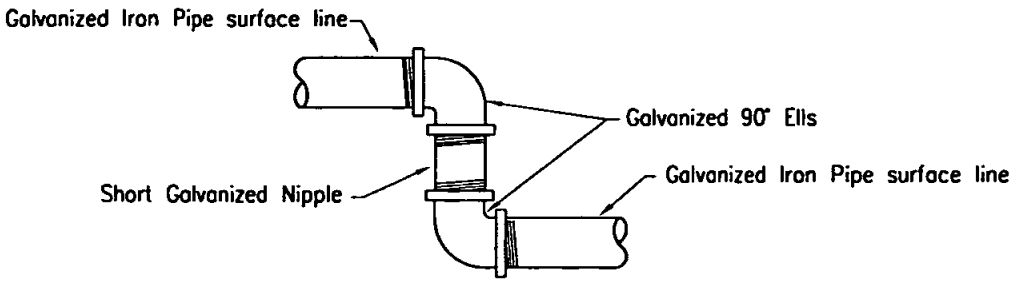

SWING JOINT DETAIL

PLAN

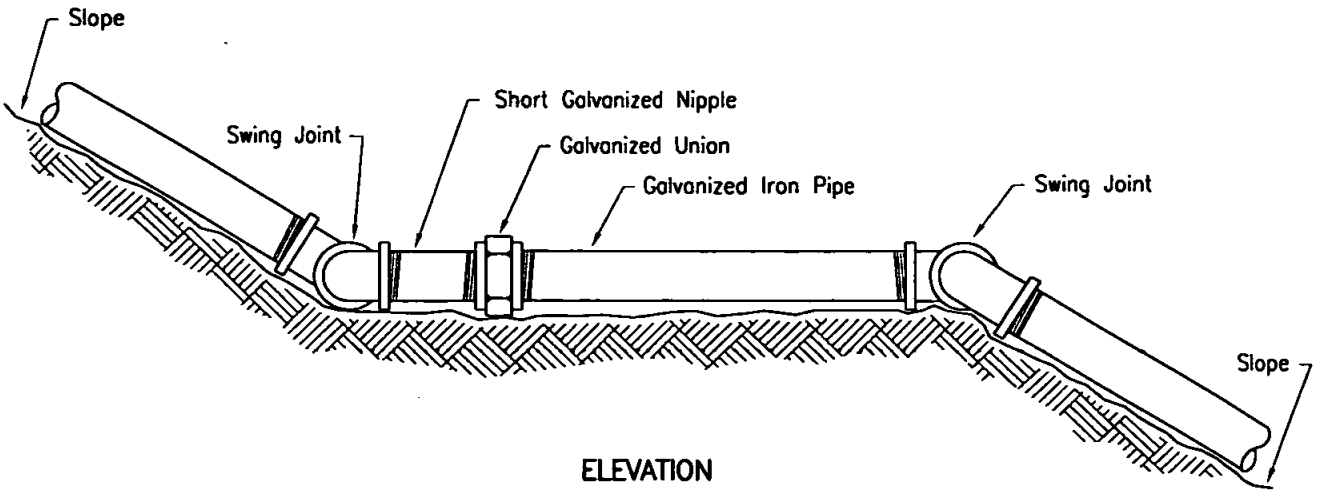

ELEVATION

NOTE
Swing Joints shall be used at each change of grade.

LEGEND ON PLANS

Revision	By	Approved	Date
ORIGINAL		Kercheval	12/75
Add Metric		T. Stanton	03/03
Reviewed		T. Stanton	04/06

SAN DIEGO REGIONAL STANDARD DRAWING

SWING JOINT AND PIPE INSTALLATION ON SLOPES ABOVE GROUND PIPE INSTALLATIONS

RECOMMENDED BY THE SAN DIEGO REGIONAL STANDARDS COMMITTEE

T. Stanton 3/10/2003

Chairperson R.C.E. 19246 Date

DRAWING NUMBER I-23

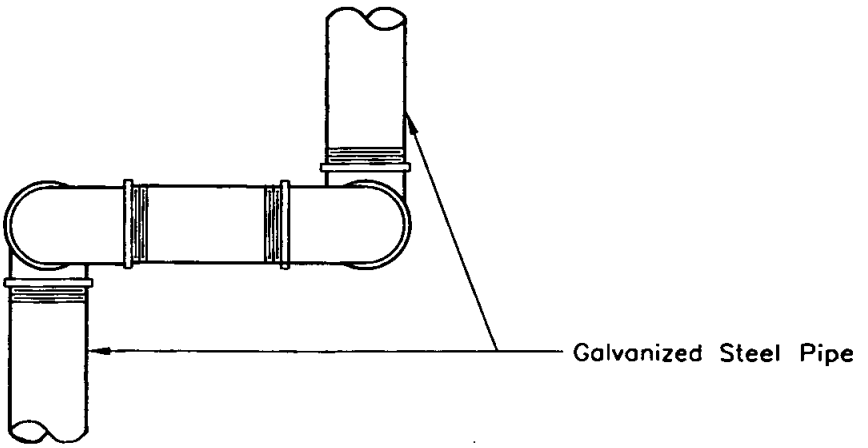

PLAN

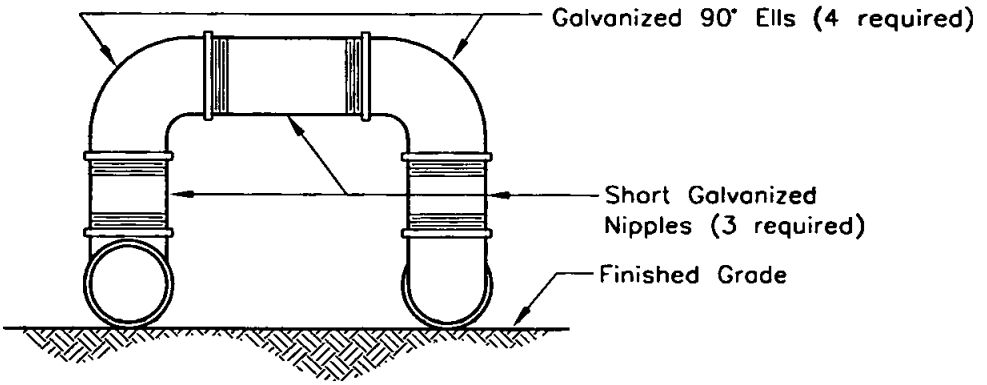

ELEVATION

NOTES

1. Double swing joint shall be used where changes of grade and alignment occur simultaneously.
2. Double swing joint shall be used for expansion joint on long runs of galvanized pipe. (91.44m (300') maximum runs)

LEGEND ON PLANS

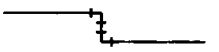

Revision	By	Approved	Date
ORIGINAL		Kercheval	12/75
Add Metric		T. Stanton	03/03
Reviewed		T. Stanton	04/06

SAN DIEGO REGIONAL STANDARD DRAWING

DOUBLE SWING JOINT ABOVE GROUND PIPE INSTALLATIONS

RECOMMENDED BY THE SAN DIEGO REGIONAL STANDARDS COMMITTEE

T. Stanton 3/10/2003

Chairperson R.C.E. 19246 Date

DRAWING NUMBER I-24

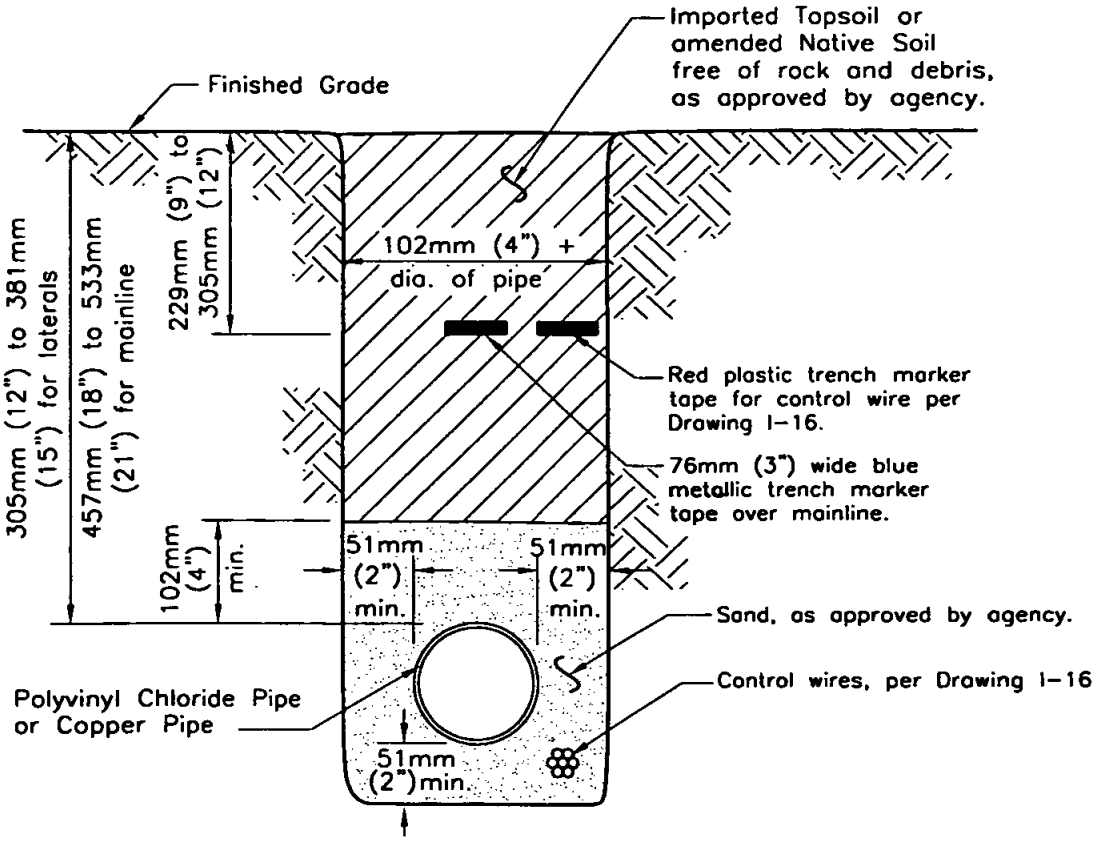

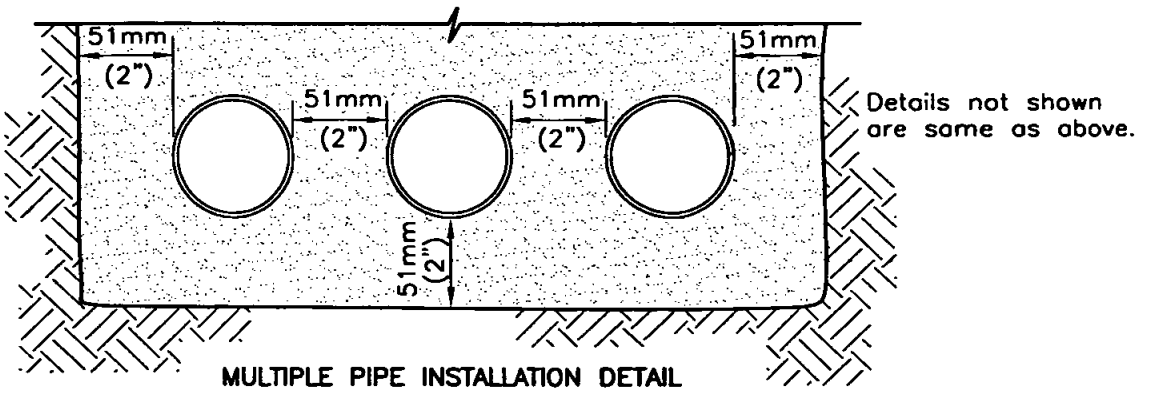

MULTIPLE PIPE INSTALLATION DETAIL

(Non-pressure pipe only, see Note 6 for pressure pipe)

NOTES

1. Backfill material shall be compacted to a relative compaction of 90% or more.
2. All P.V.C. pipe shall lay free in the trench with no induced strain and with sufficient allowance for expansion and contraction as recommended by the manufacturer.
3. Teflon tape, 19mm (3/4") wide shall be used on all threaded connections.
4. The letter W shall be stamped or chiseled on the improvement (curb-sidewalk) directly above the pressure pipeline.
5. All plastic pipe under pavement shall be installed in a Sch. 40 P.V.C. sleeve twice the diameter of the pipe.
6. Minimum horizontal clearance between pressure pipes shall be 152mm (6")

Revision	By	Approved	Date
ORIGINAL		Parkinson	02/95
Add Metric		T. Stanton	03/03
UPDATE		M. Caro	06/04

SAN DIEGO REGIONAL STANDARD DRAWING

IRRIGATION TRENCH P.V.C. AND/OR COPPER PIPE (76mm (3") AND SMALLER)

RECOMMENDED BY THE SAN DIEGO REGIONAL STANDARDS COMMITTEE

06/24/2004

Chairperson R.C.E. 19246 Date

DRAWING NUMBER **I-25**

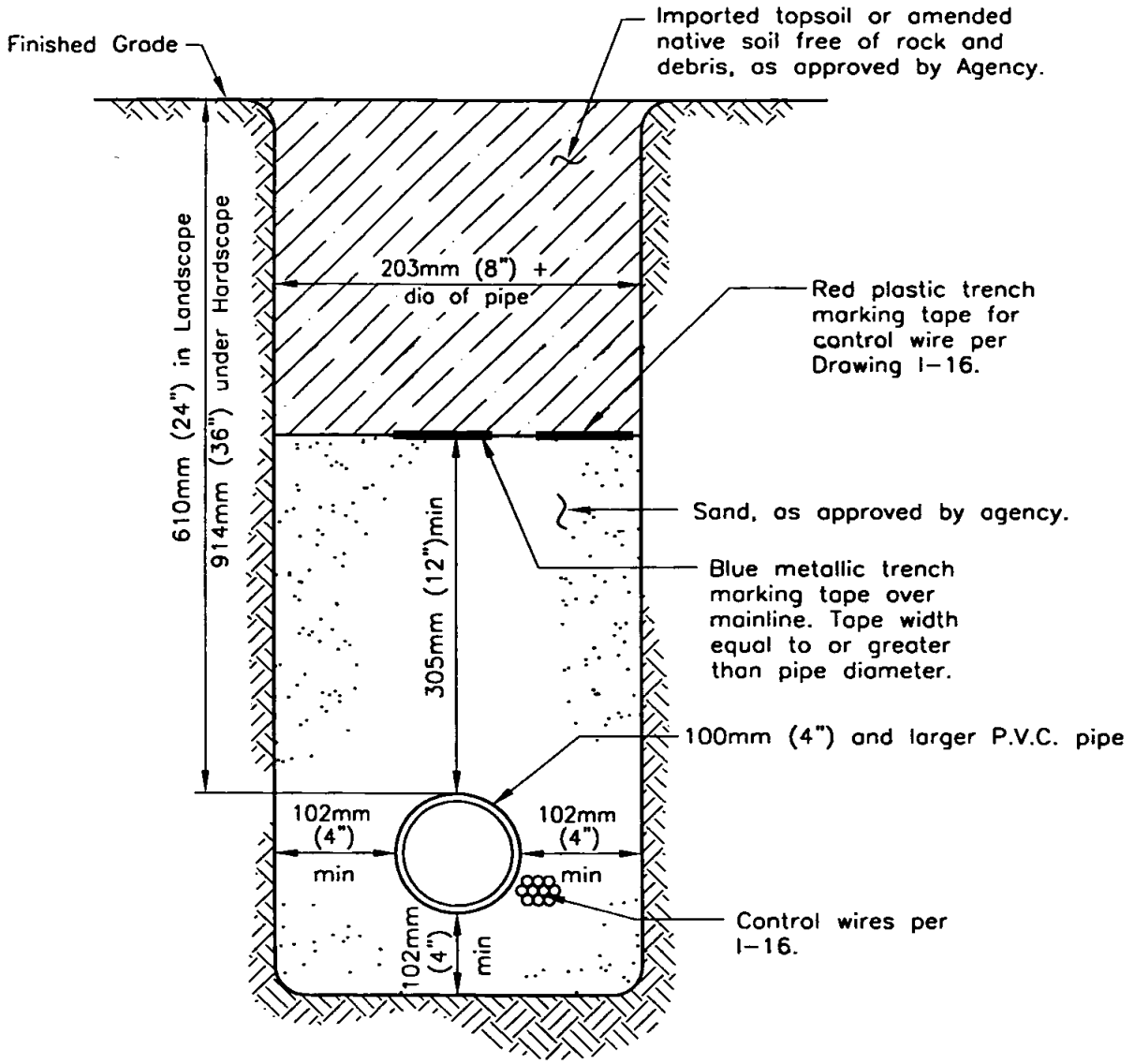

NOTES

1. Backfill material shall be compacted to a relative compaction of 90% or more.
2. All pipeline fittings shall be epoxy coated ductile iron. All fittings shall have thrust blocks per W-17 or joint restraints.
3. The letter 'W', for pressure pipeline and 'E', for control wires shall be stamped or chiseled on the improvement (curb-sidewalk) directly above the pressure pipeline and wires respectively.
4. No P.V.C. pressure pipeline shall be installed within 914mm (3') of any utility, unless otherwise specified.

Revision	By	Approved	Date
ORIGINAL		Kercheval	12/75
Add Metric		T. Stanton	03/03
UPDATE		M. Caro	05/04

SAN DIEGO REGIONAL STANDARD DRAWING

IRRIGATION TRENCH DETAIL
100mm (4") AND LARGER P.V.C. MAINLINE

RECOMMENDED BY THE SAN DIEGO REGIONAL STANDARDS COMMITTEE

T. Stanton 05-27-2004

Chairperson R.C.E. 19246 Date

DRAWING NUMBER **I-26**

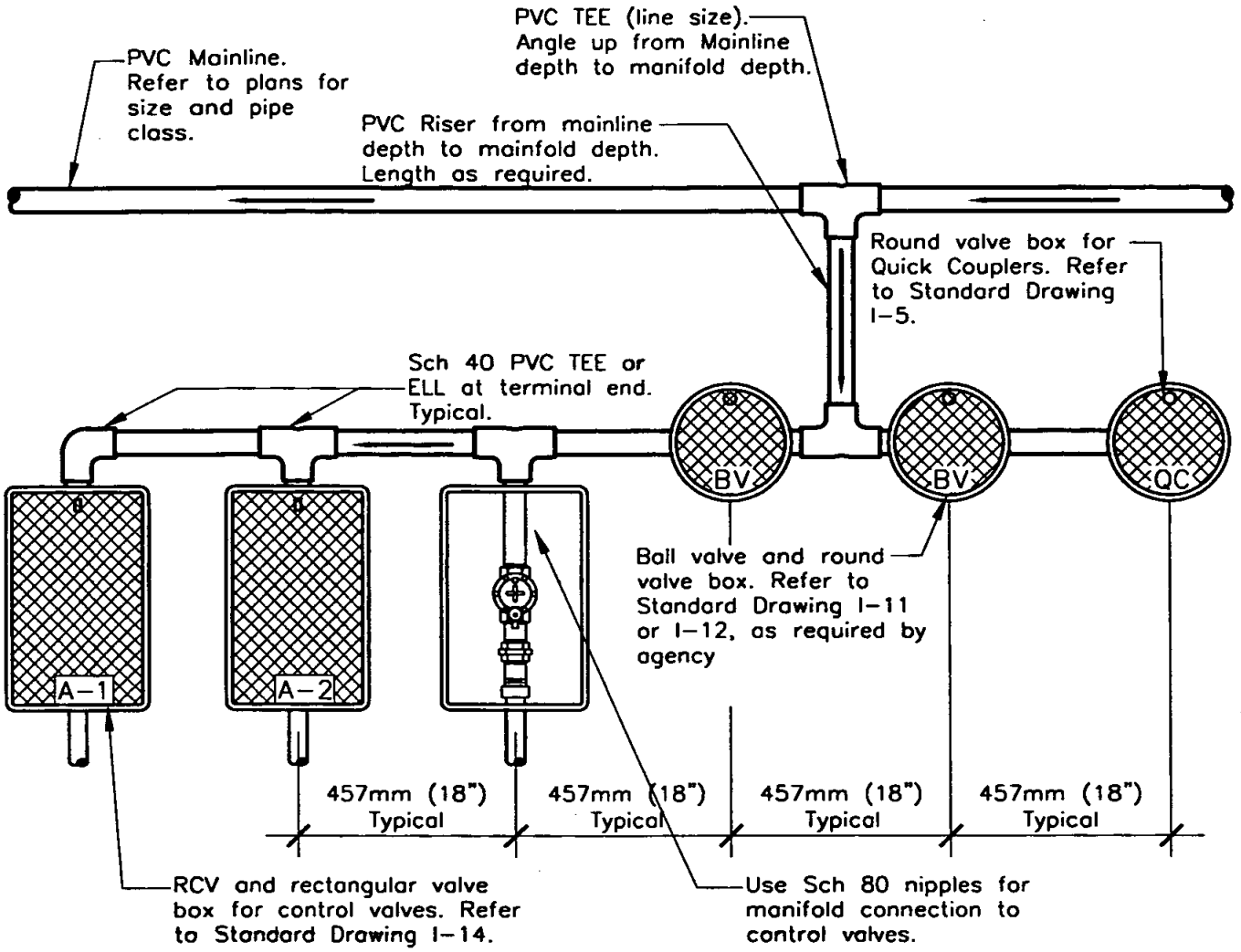

NOTES

1. All PVC Pipe used in manifold assemblies shall of the same class as specified for the mainline, unless otherwise specified.
2. All valve boxes shall be heat branded with the appropriate identification. Refer to plans and specifications.

Revision	By	Approved	Date
ORIGINAL		Kercheval	12/75
Add Metric		T. Stanton	03/03
UPDATE		M. Caro	04/05

SAN DIEGO REGIONAL STANDARD DRAWING

REMOTE CONTROL VALVE MANIFOLD ASSEMBLY WITH P.V.C. PIPE

RECOMMENDED BY THE SAN DIEGO REGIONAL STANDARDS COMMITTEE

04/28/2005

Chairperson R.C.E. 19246 Date

DRAWING NUMBER I-32

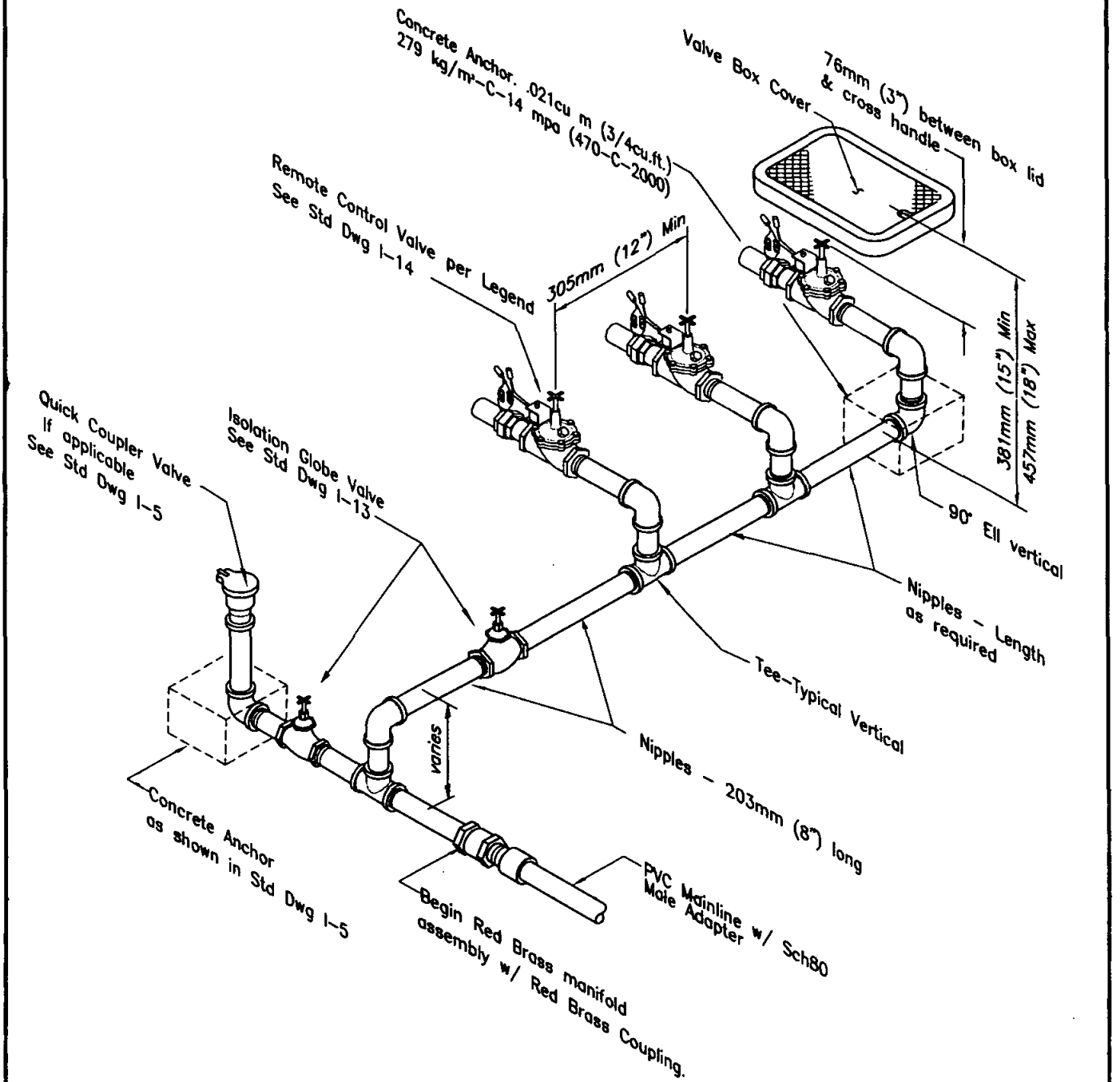

NOTES

1. Typical remote control valve assembly: all nipples and fittings are to be red brass.
2. Close nipples are not allowed.
3. Install individual valve boxes for each remote control valve.
4. Locations of quick coupler valves shall be as shown on plans.
5. For temporary irrigation systems, I-32 may be used if approved by agency.

Revision	By	Approved	Date
ORIGINAL		Parkinson	5/92
Add Metric		T. Stanton	03/03
UPDATE		M. Caro	04/05

SAN DIEGO REGIONAL STANDARD DRAWING

REMOTE CONTROL VALVE MANIFOLD ASSEMBLY W/ BRASS PIPE

RECOMMENDED BY THE SAN DIEGO REGIONAL STANDARDS COMMITTEE

04/28/2005

Chairperson R.C.E. 19246 Date

DRAWING NUMBER **I-33**

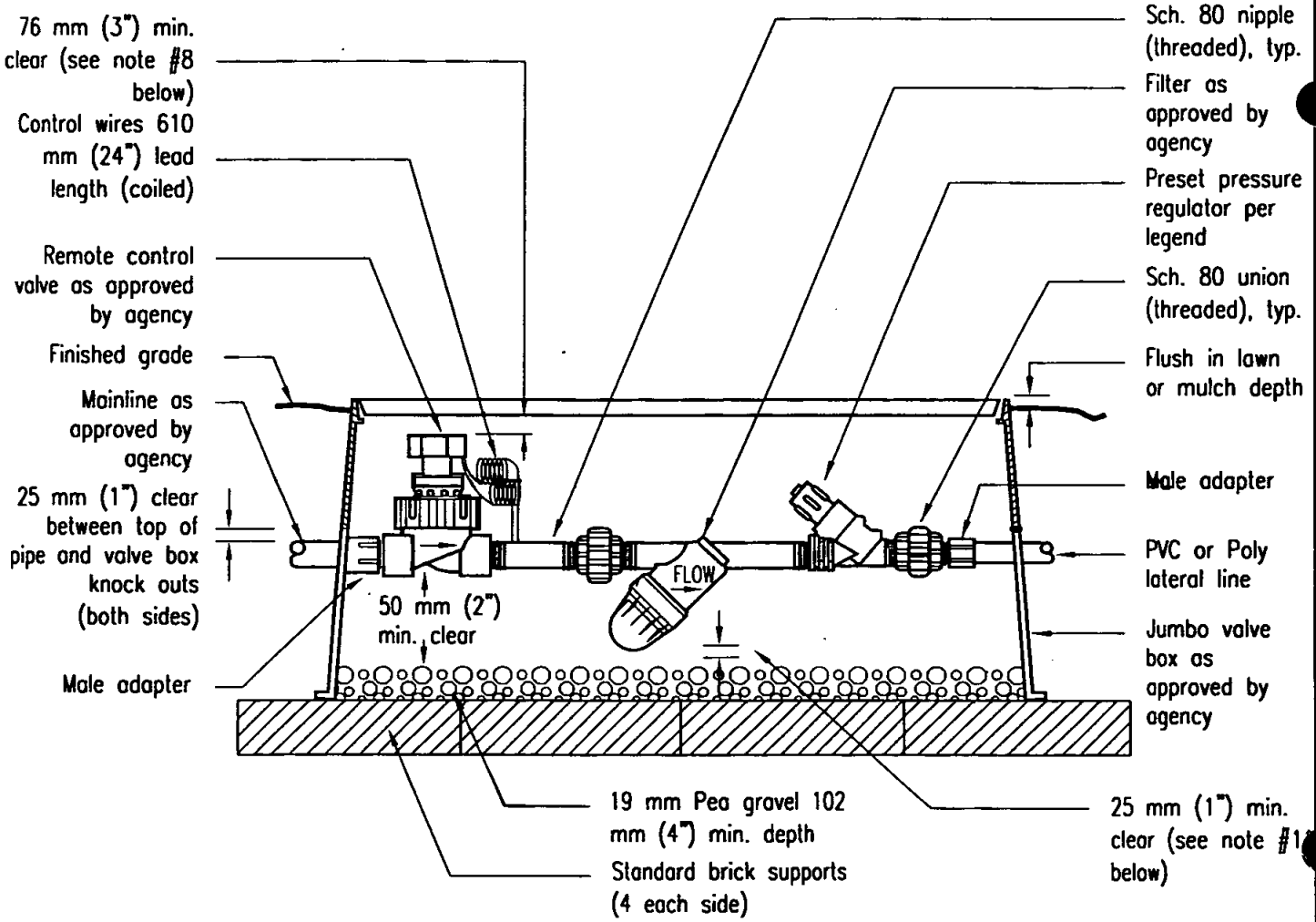

ELEVATION

NOTES:

1. Splicing shall be made in valve boxes and pull boxes only. See Standard Drawing I-15 for splice/soldering notes.
2. All splices shall be made with a properly set mechanical splice connector entirely enclosed in self-curing resin and shall be completely water-proof.
3. Spare wires terminating in valve boxes shall have their ends insulated, the same as for a splice.
4. When two or more valves are installed in the same location, see Standard Drawing I-32 or I-33, per agency standards.
5. Valve/controller identification shall be labeled on the valve box and tagged on the valve per agency requirements.
6. Knock outs shall not be enlarged unless approved by agency.
7. Install only one valve assembly per box.
8. 76 mm (3") min. clear from bottom of box lid to highest point of valve assembly.
9. Valve boxes shall be set perpendicular to hardscape, a max. 305 mm (12") from edge of hardscape, 51-76 mm (2-3") above finished grade in shrub/groundcover areas, per mulch depth. If necessary to be set in turf, valve boxes shall be set flush with finished grade.
10. Close nipples shall not be used.
11. Filter shall be installed to allow for maintenance access.

LEGEND ON PLANS

▽

Or approved agency symbol

Revision	By	Approved	Date
ORIGINAL		M. Caro	1/06

SAN DIEGO REGIONAL STANDARD DRAWING

REMOTE CONTROL VALVE DRIP IRRIGATION

RECOMMENDED BY THE SAN DIEGO REGIONAL STANDARDS COMMITTEE

01/26/2006

Chairperson R.C.E. 19246 Date

DRAWING NUMBER I-35

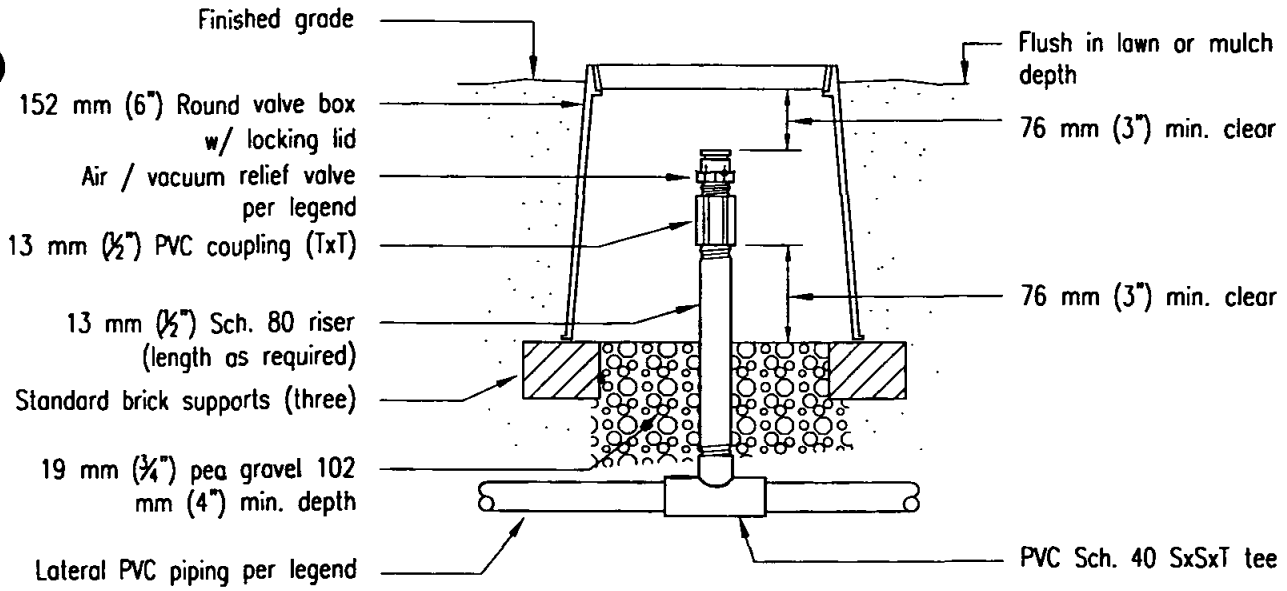

PLUMBED TO PVC

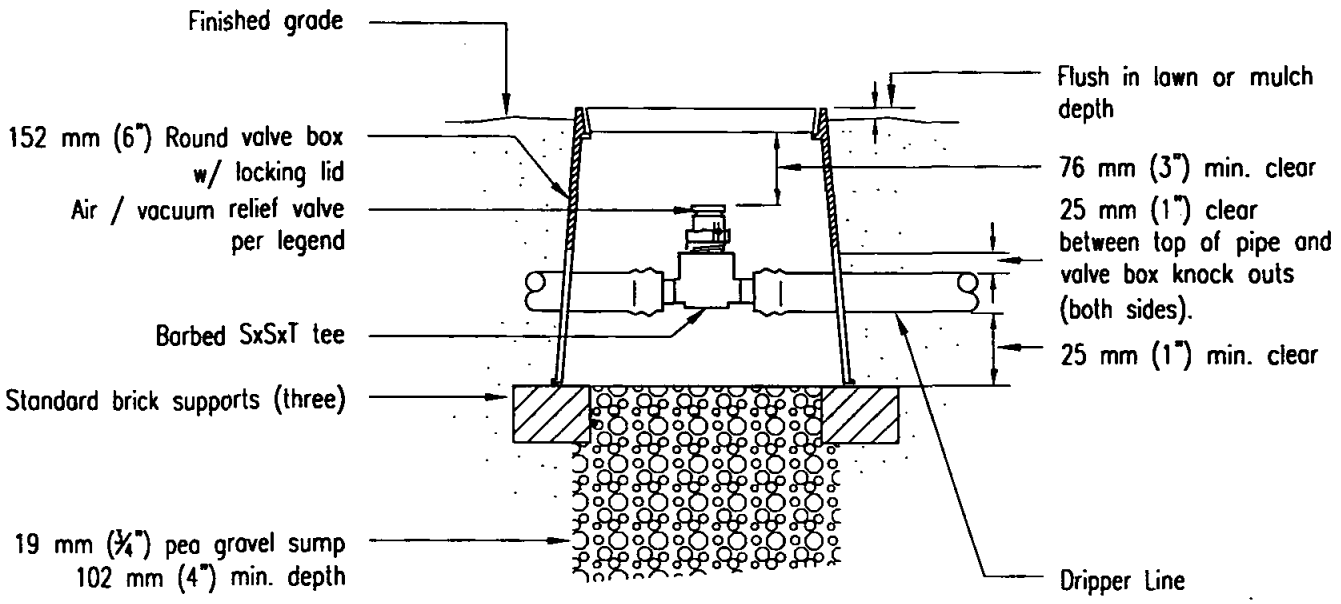

PLUMBED TO DRIPPER LINE

NOTES:

1. Install air/vacuum relief valve at hight point(s) in valve circuit.
2. Heat-brand valve box lid "AR" or as per agency requirement.
3. Valve shall be centered in box.

LEGEND ON PLANS

Ⓐ

Or approved agency symbol

Revision	By	Approved	Date
ORIGINAL		M. Caro	1/06

SAN DIEGO REGIONAL STANDARD DRAWING

AIR/VACUUM RELIEF VALVE

RECOMMENDED BY THE SAN DIEGO REGIONAL STANDARDS COMMITTEE

01/26/2006

Chairperson R.C.E. 19246 Date

DRAWING NUMBER **I-36**

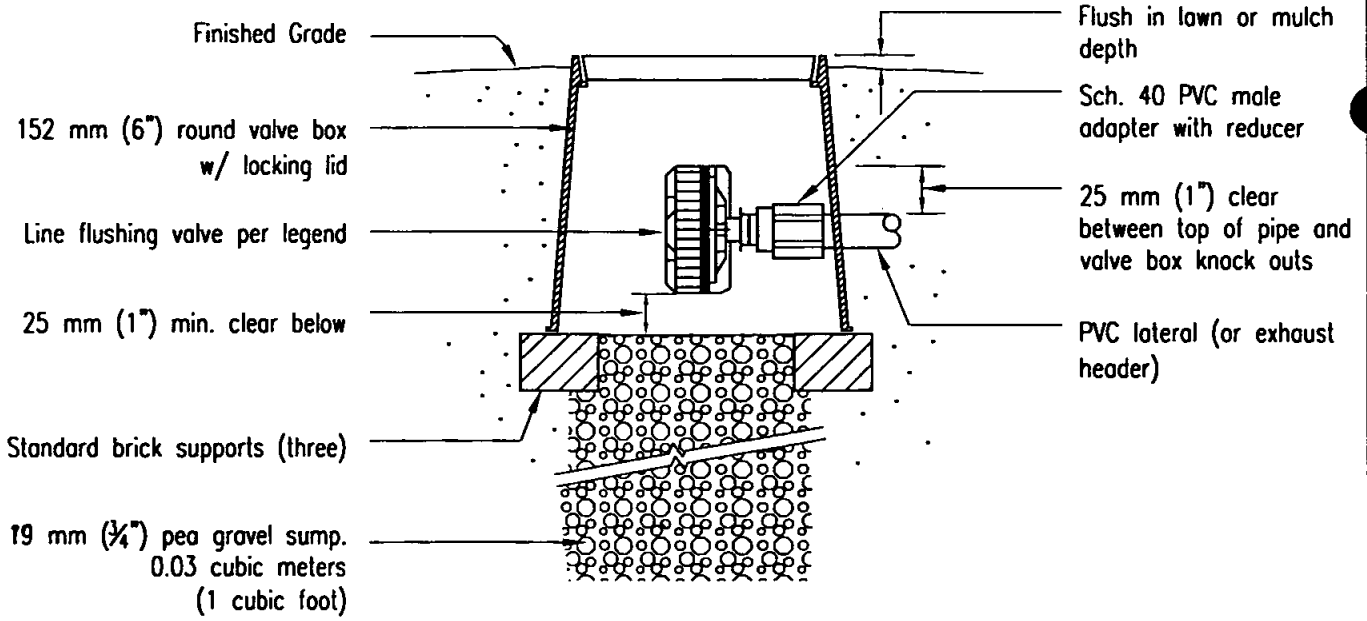

PLUMBED TO PVC

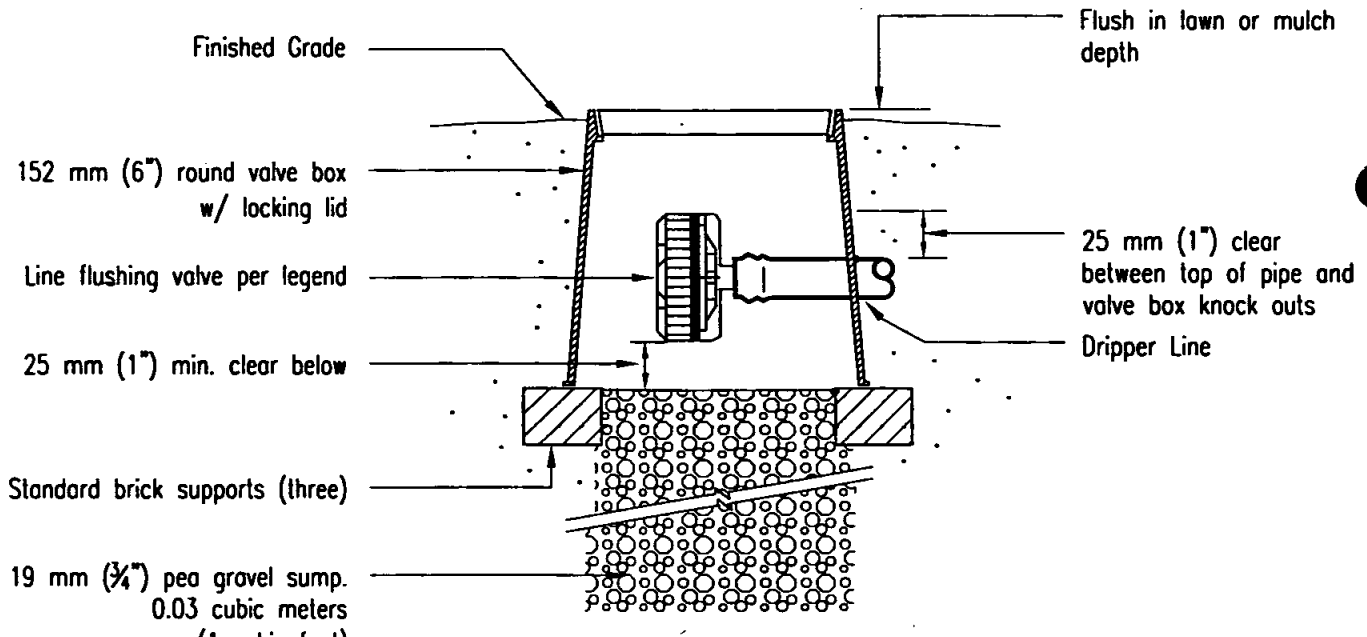

PLUMBED TO DRIPPER LINE

NOTES:

1. Install flush valve(s) at furtherst point(s) in system from the control valve and at low points as needed per plans.
2. Heat brand valve box lids "FV" or as per agency requirement.
3. Valve shall be centered in box.

LEGEND ON PLANS

(FV)

Or approved agency symbol

Revision	By	Approved	Date
ORIGINAL		M. Caro	1/06

SAN DIEGO REGIONAL STANDARD DRAWING

DRIP IRRIGATION FLUSH VALVE (AUTOMATIC)

RECOMMENDED BY THE SAN DIEGO REGIONAL STANDARDS COMMITTEE

01/26/2006

Chairperson R.C.E. 19246 Date

DRAWING NUMBER I-37

LANDSCAPING

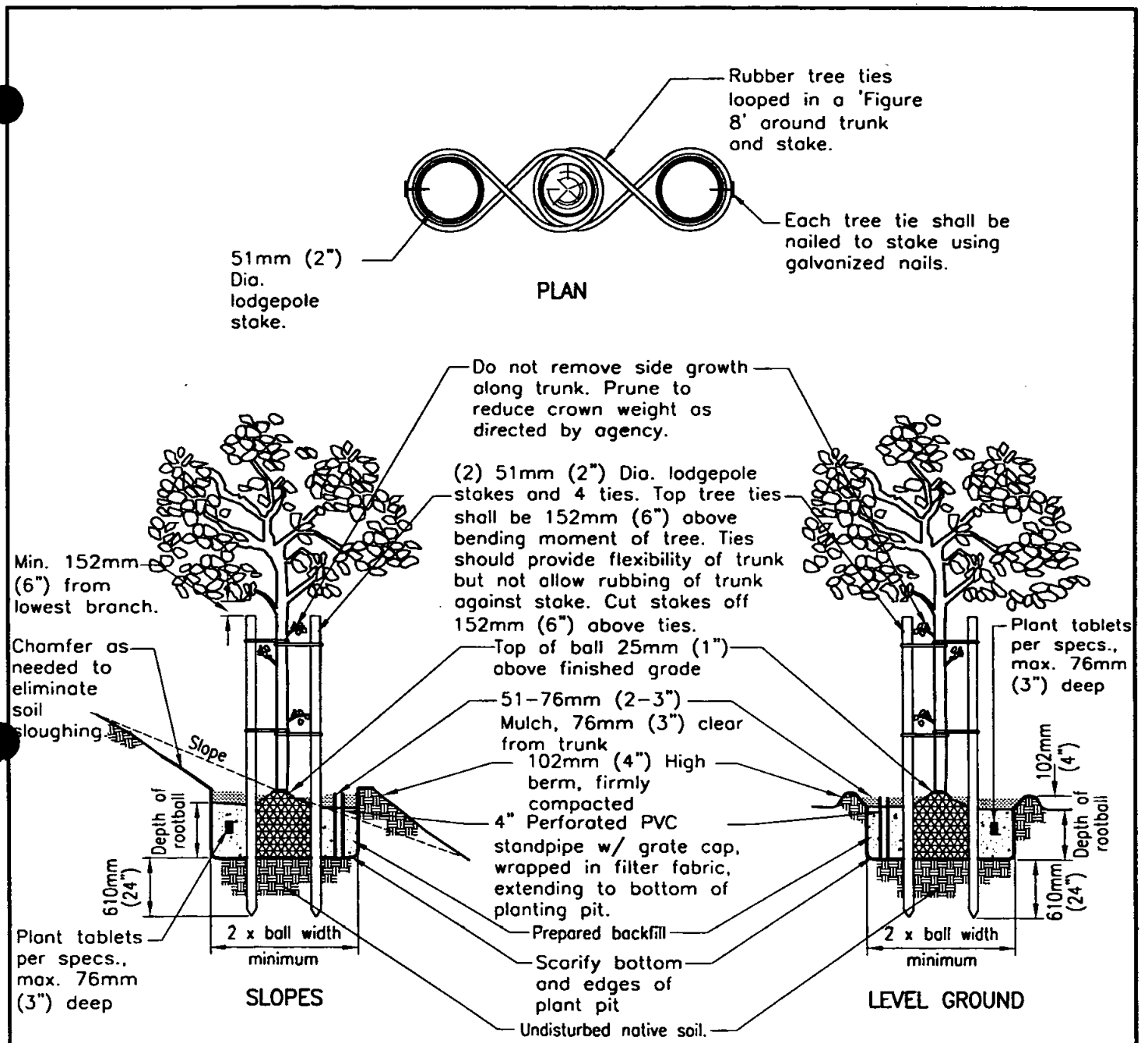

NOTES

1. Double stake #15 (15 gal.) and larger trees.
2. For single staked trees, place stake on windward side of tree.
3. Locate stakes outside of rootball.
4. Lodgepoles treated with Chromated Copper Arsenate (CCA) are not allowed.

Revision	By	Approved	Date
ORIGINAL		Kercheval	12/75
Add Metric		T. Stanton	03/03
UPDATE		M. Caro	02/05

SAN DIEGO REGIONAL STANDARD DRAWING

TREE PLANTING AND STAKING

RECOMMENDED BY THE SAN DIEGO REGIONAL STANDARDS COMMITTEE

T. Stanton 02/24/2005

Chairperson R.C.E. 19246 Date

DRAWING NUMBER **L-1**

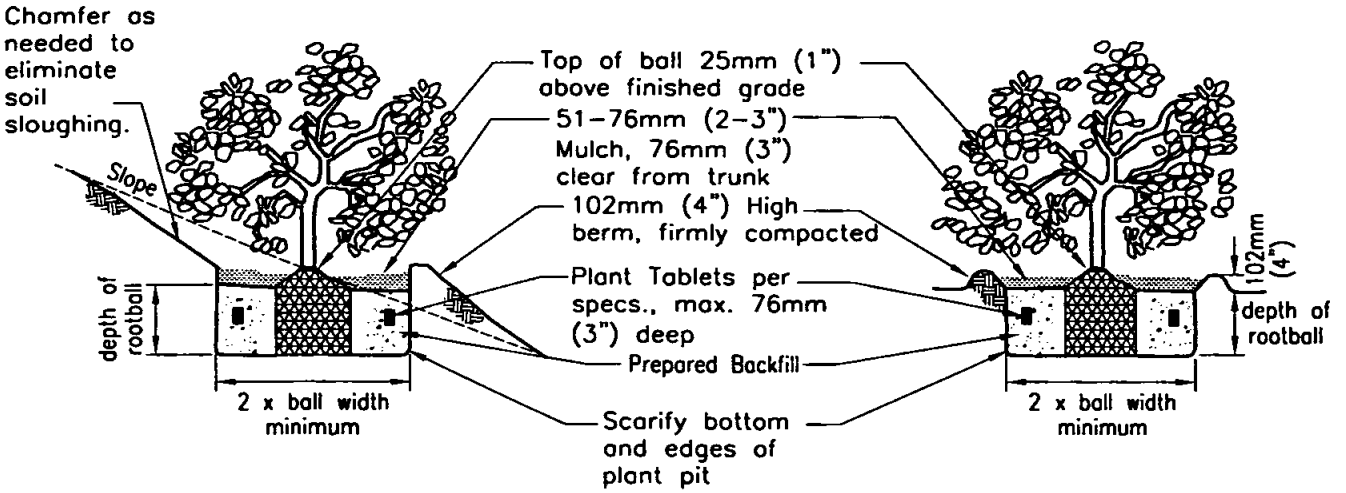

SHRUB PLANTING – SLOPES

SHRUB PLANTING – LEVEL GROUND

Revision	By	Approved	Date
ORIGINAL		Kercheval	12/75
Add Metric		T. Stanton	03/03
UPDATE		M. Caro	02/05

SAN DIEGO REGIONAL STANDARD DRAWING

SHRUB PLANTING

RECOMMENDED BY THE SAN DIEGO REGIONAL STANDARDS COMMITTEE

T. Stanton 02/24/2005

Chairperson R.C.E. 19246 Date

DRAWING NUMBER **L-2**

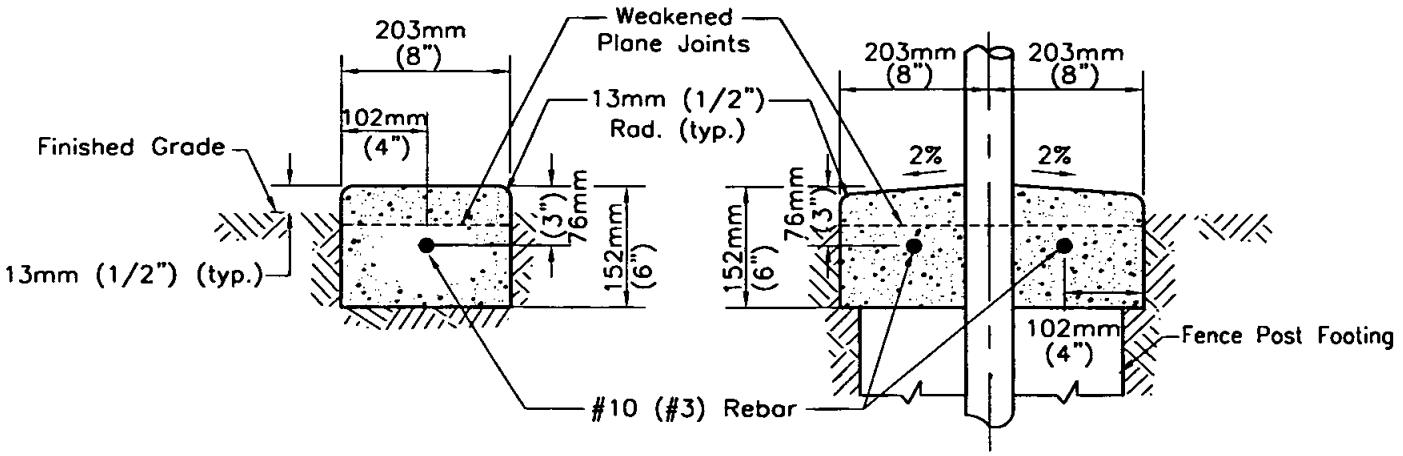

TYPE A
SHRUB AREA

TYPE B
UNDER FENCES

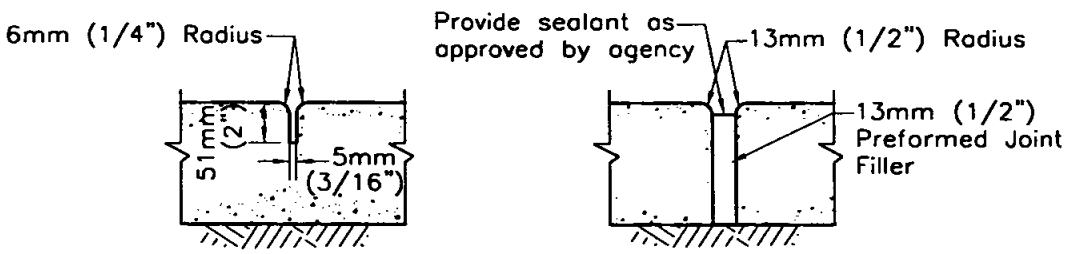

WEAKENED PLANE JOINT
Max. 6m (20') O.C.

EXPANSION JOINT
Max. 36.6m (120') O.C.

NOTES

1. Rebar shall be continuous with 305mm (12") overlap at splices.
2. Concrete shall be class 308kg/M^3-C-17-Mpa (520-C-2500) and same color as any adjacent concrete.
3. Install weakened plane joints at each fence post.
4. Install expansion joints where the mowing strip abuts any concrete improvement and at location approved by agency.

Revision	By	Approved	Date
ORIGINAL		H.Hecht	10/82
Add Metric		T. Stanton	03/03
UPDATE		M. Caro	02/05

SAN DIEGO REGIONAL STANDARD DRAWING

CONCRETE MOWING STRIP

RECOMMENDED BY THE SAN DIEGO REGIONAL STANDARDS COMMITTEE

T. Stanton 02/24/2005

Chairperson R.C.E. 19246 Date

DRAWING NUMBER L-3

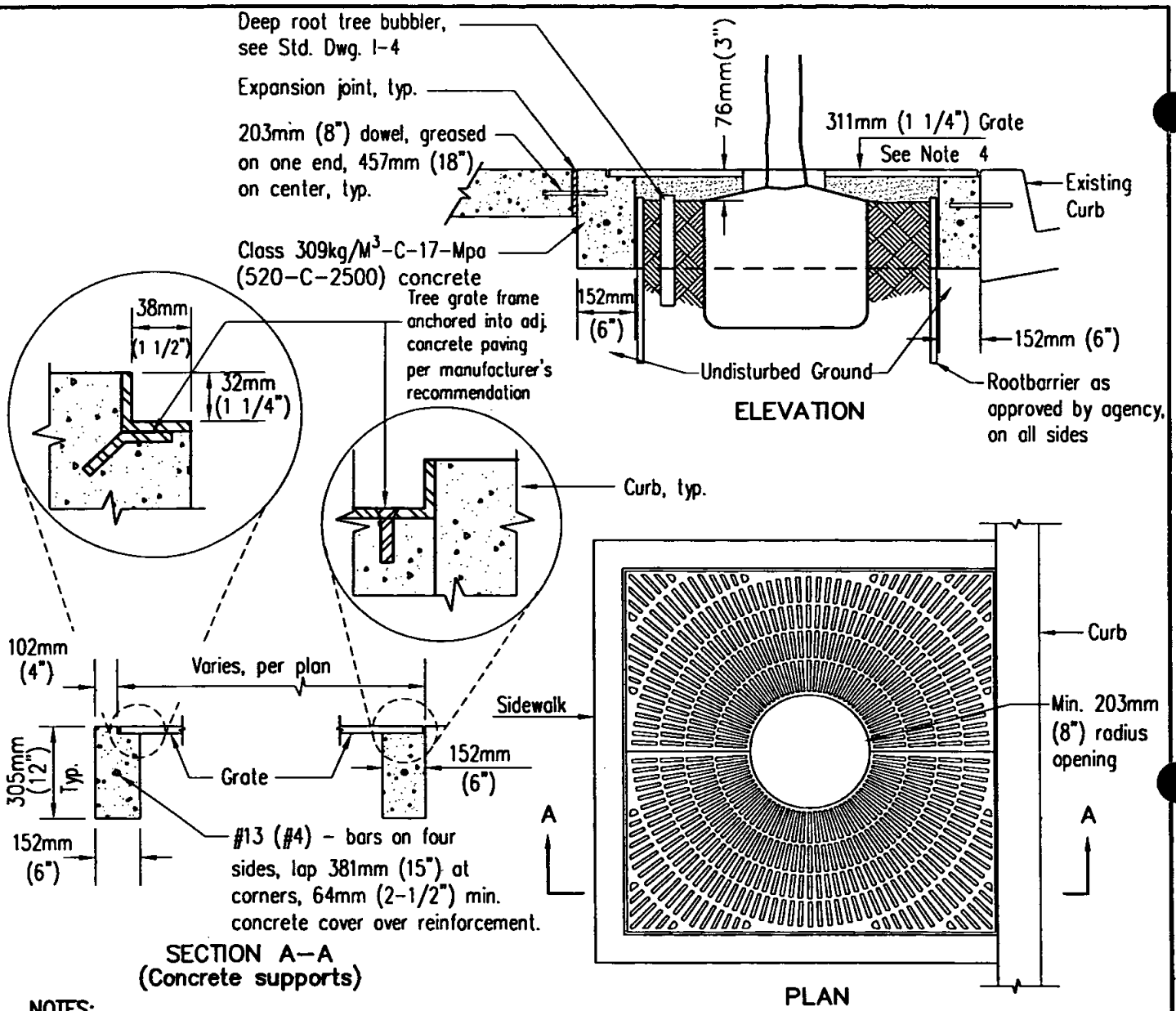

NOTES:

1. Sidewalk to be removed for each tree planting shall be saw cut full depth.
2. Fill below grate with shredded bark mulch. Do not fill tree grate opening.
3. If the grate is to be secured, all bolts, nuts and washers shall be hot dipped galvanized.
4. Grates shall be min. 3.7 sq. m. (40 sq. ft.) in size, and two separate pieces, unless otherwise specified on the plans. Slot openings in grate design shall have 10mm (3/8") maximum width. Grate designs shall be in accordance with current A.D.A. standards as well as the latest edition of the Uniform Building Code, with a minimum uniform live load of 250 pounds per square foot in sidewalks, and have a method of symmetrical interior expandable rings/openings (detailed on the plans) as selected and approved by the agency.
5. Immediate notification shall be given to the Engineer of any below grade improvements encountered.
6. Set grate in frame prior to placement of pavement.
7. Tree shall be centered in grate opening.

Revision	By	Approved	Date
ORIGINAL		Parkinson	5/92
Add Metric		T. Stanton	03/03
UPDATE		M. Caro	1/06

SAN DIEGO REGIONAL STANDARD DRAWING

TREE GRATE

RECOMMENDED BY THE SAN DIEGO REGIONAL STANDARDS COMMITTEE

T. Stanton 01/26/2006

Chairperson R.C.E. 19246 Date

DRAWING NUMBER **L-4**

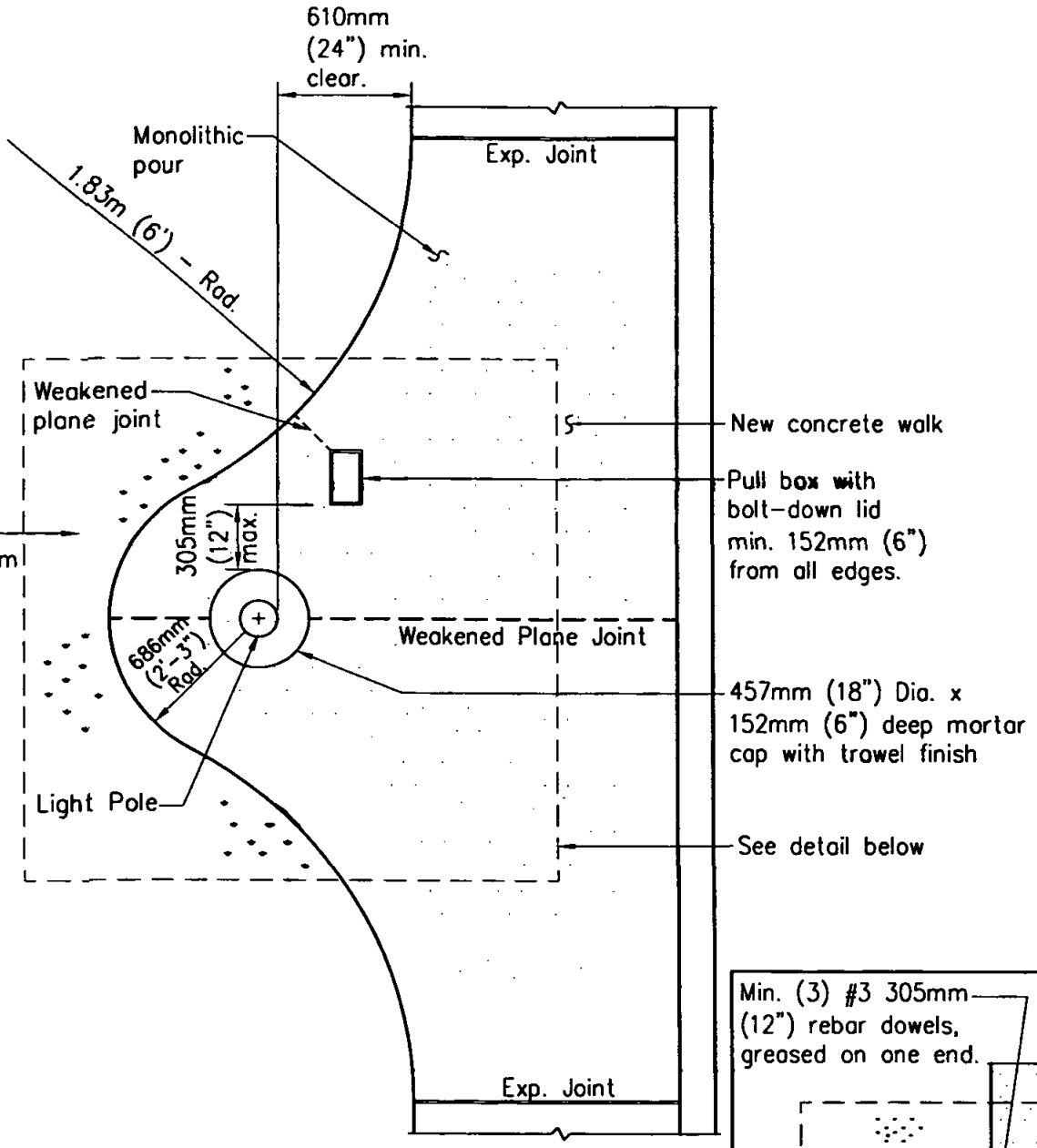

PLAN VIEW

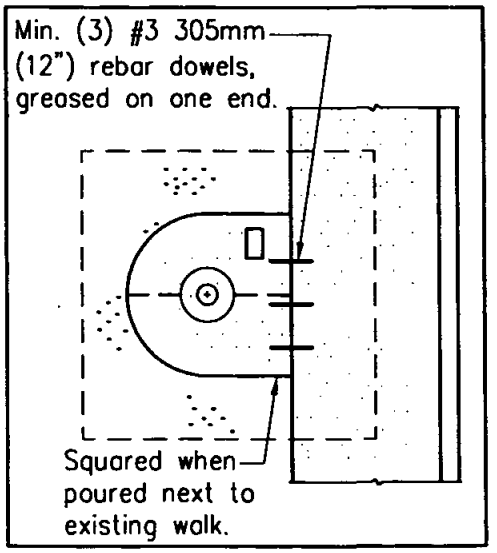

PAD WHEN ADJ. TO EXISTING CONCRETE

NOTES

1. See Electric Plans for fixture/pole/footing and pull box details.
2. Use monolithic pour for new construction.
3. Pole pads shall drain at 2% minimum in same direction as sidewalk.
4. Concrete pad shall be the same as specified for sidewalk.
5. Locate light poles in shrub areas where possible.

Revision	By	Approved	Date
ORIGINAL		Parkinson	9/88
Add Metric		T. Stanton	03/03
UPDATE		M. Caro	08/05

SAN DIEGO REGIONAL STANDARD DRAWING

LIGHT POLE PAD IN TURF AREAS

RECOMMENDED BY THE SAN DIEGO REGIONAL STANDARDS COMMITTEE

T. Stanton 08/25/2005

Chairperson R.C.E. 19246 Date

DRAWING NUMBER L-5

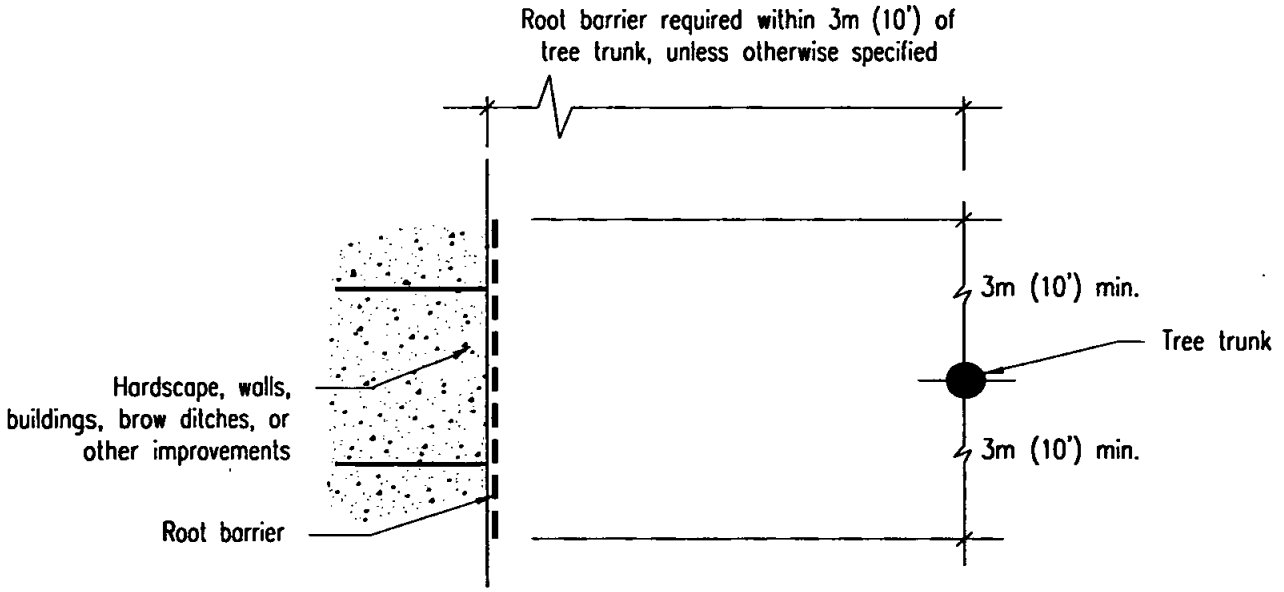

PLAN VIEW

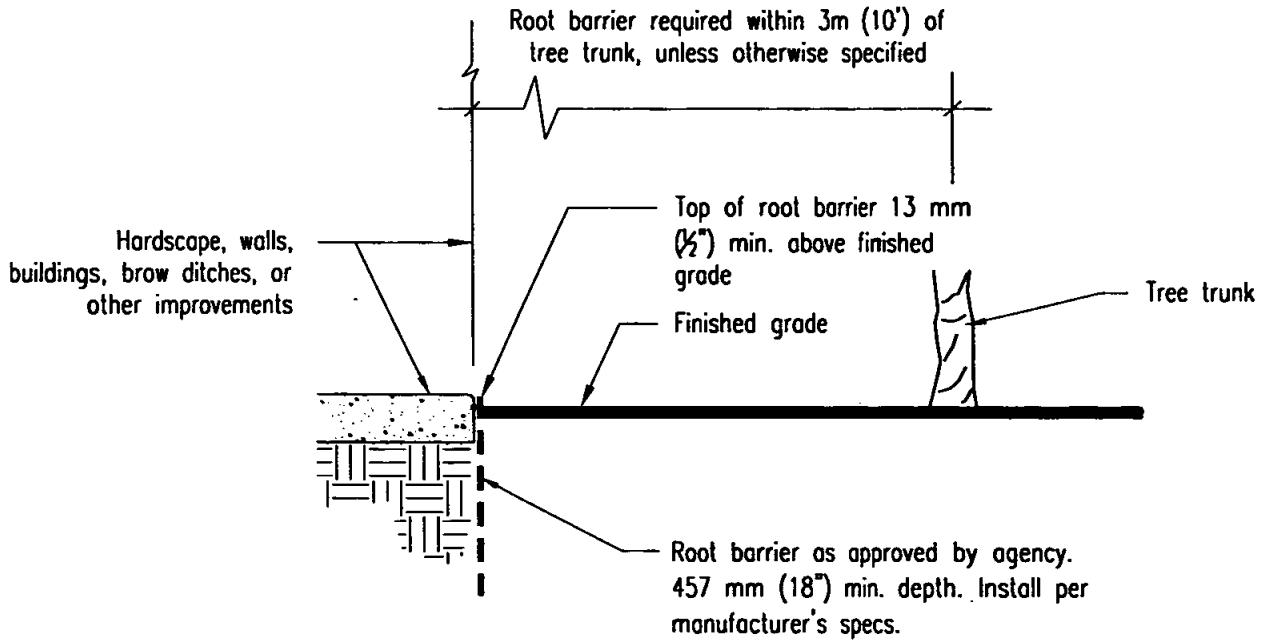

SECTION

NOTE:

1. Root barrier shall be installed adjacent to the improvement and not around the rootball.

Revision	By	Approved	Date
ORIGINAL		M. Caro	2/06

SAN DIEGO REGIONAL STANDARD DRAWING

ROOT CONTROL BARRIER

RECOMMENDED BY THE SAN DIEGO REGIONAL STANDARDS COMMITTEE

02/23/2006

Chairperson R.C.E. 19246 Date

DRAWING NUMBER **L-6**

MISCELLANEOUS

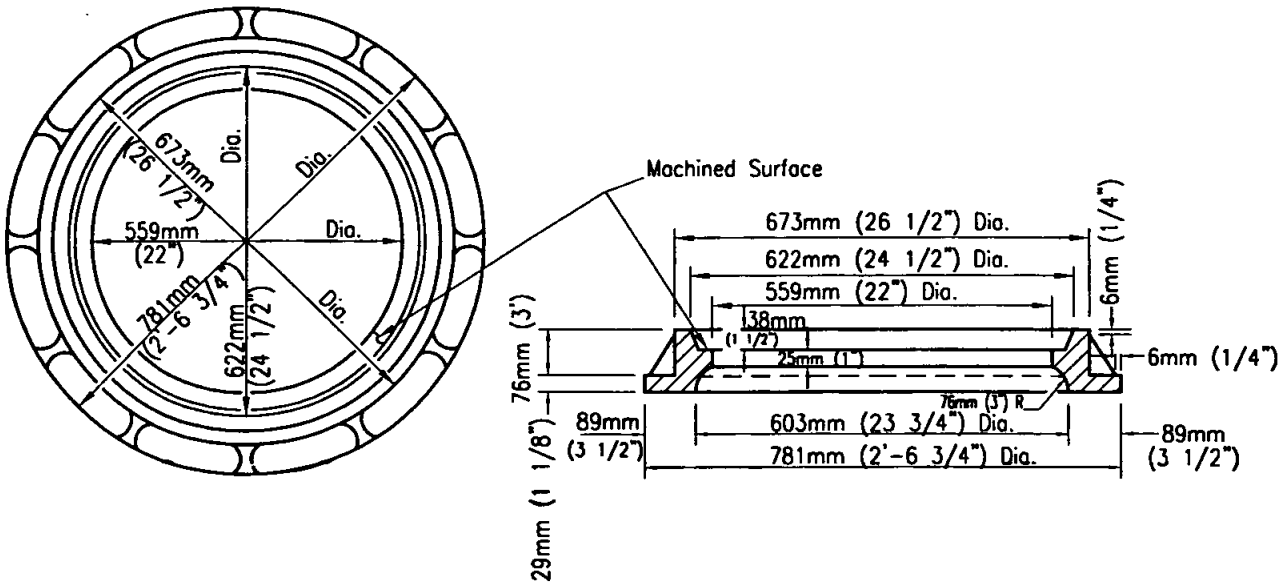

MANHOLE COVER FRAME

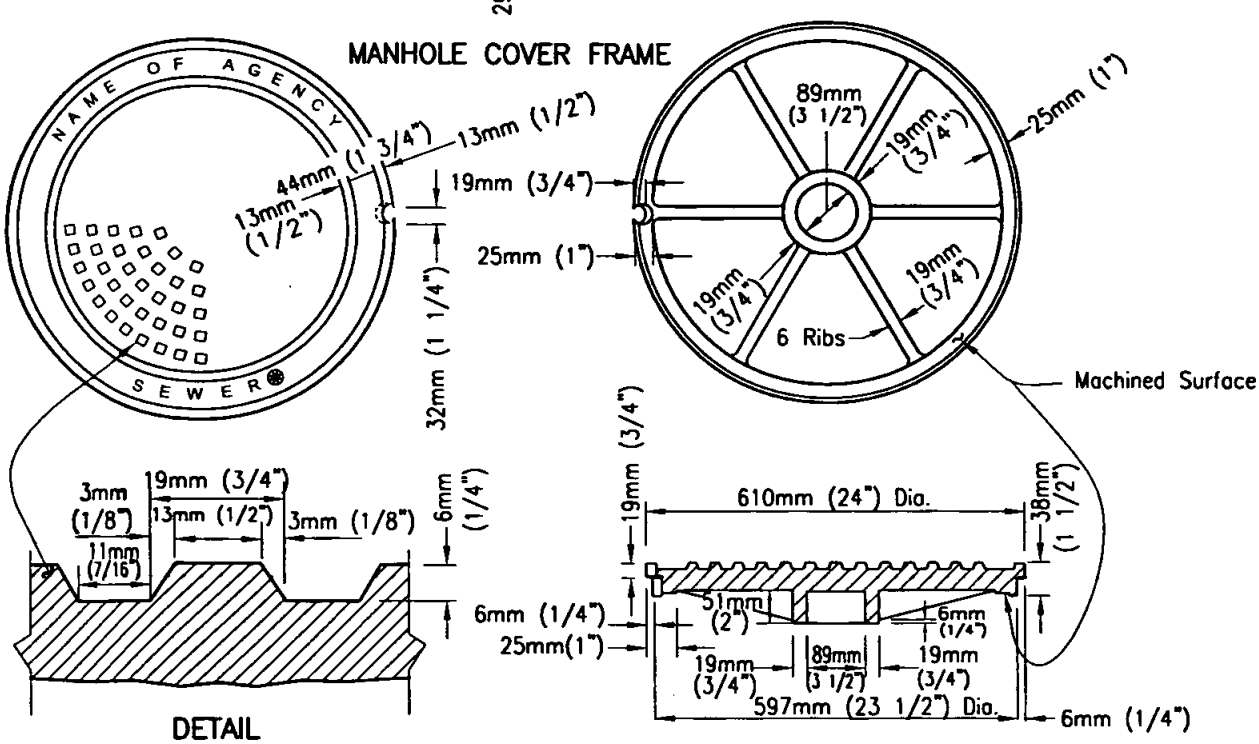

MANHOLE COVER

NOTES

1. Frame and cover shall be cast iron. Cast iron shall conform to ASTM 48, Class 35B.
2. Weights: Frame 75.3kg (166) – 87.6kg (193)lbs.
   Cover 67.7kg (147) – 77.6kg (171)lbs.
3. Machine all matching surfaces and seats of frame and cover to prevent rocking.
4. Imported frames and covers shall have the country of origin marked in compliance with federal regulations.

FOR	MARK
Sewer Projects	Sewer
Storm Drain Projects	Storm Drain
Water Projects	Water

Revision	By	Approved	Date
ORIGINAL		Kercheval	12/75
Add Metric		T. Stanton	03/03
Reviewed		T. Stanton	04/06

SAN DIEGO REGIONAL STANDARD DRAWING

.61m (24") MANHOLE FRAME AND COVER HEAVY DUTY

RECOMMENDED BY THE SAN DIEGO REGIONAL STANDARDS COMMITTEE

T. Stanton 3/10/2003

Chairperson R.C.E. 19246 Date

DRAWING NUMBER **M-1**

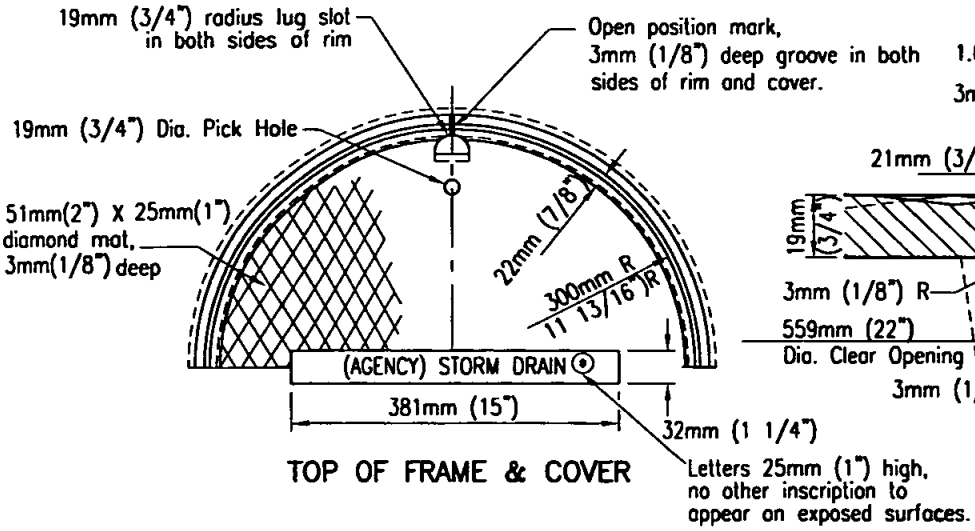

TOP OF FRAME & COVER

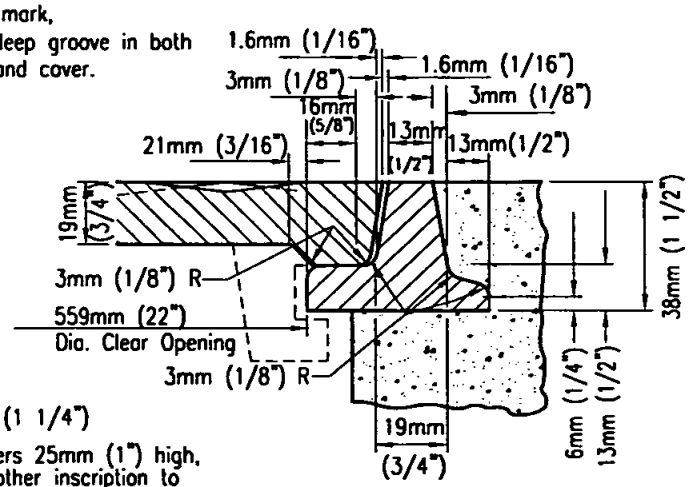

SECTION THROUGH RIM

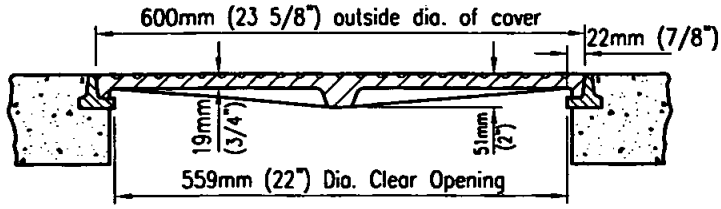

SECTION THROUGH FRAME & COVER

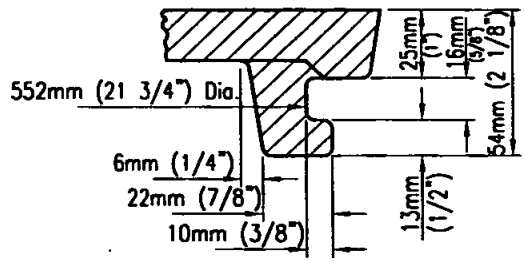

SECTION THROUGH LUG

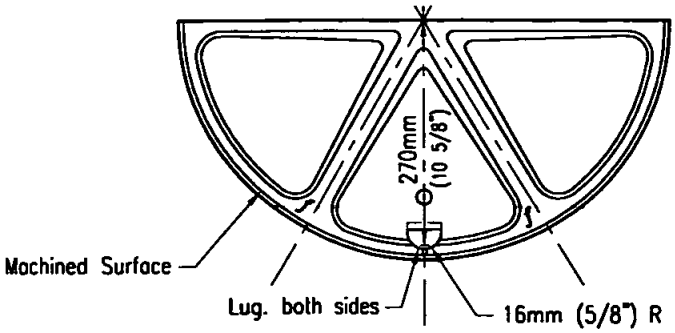

BOTTOM OF COVER

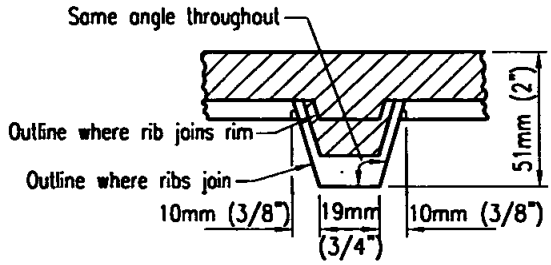

SECTION THROUGH RIB AT MID RADIUS

NOTES

1. Frame and cover shall be cast iron. Cast iron shall conform to ASTM 48, Class 30.
2. Frame and cover for use in non-traffic area only.
3. Weights: Frame 13.2kg (29) - 15kg (33) lbs.
   Cover 43kg (95) - 50kg (110) lbs.
4. Imported frames and covers shall have the country of origin marked in compliance with federal regulations.

⊛

FOR	MARK
Sewer Projects	Sewer
Storm Drain Projects	Storm Drain
Water Projects	Water

Revision	By	Approved	Date
ORIGINAL		Kercheval	12/75
Add Metric		T. Stanton	03/03
Reviewed		T. Stanton	04/06

SAN DIEGO REGIONAL STANDARD DRAWING

.61m (24") MANHOLE FRAME AND COVER LIGHT DUTY

RECOMMENDED BY THE SAN DIEGO REGIONAL STANDARDS COMMITTEE

T. Stanton 3/01/2003

Chairperson R.C.E. 19246 Date

DRAWING NUMBER **M-2**

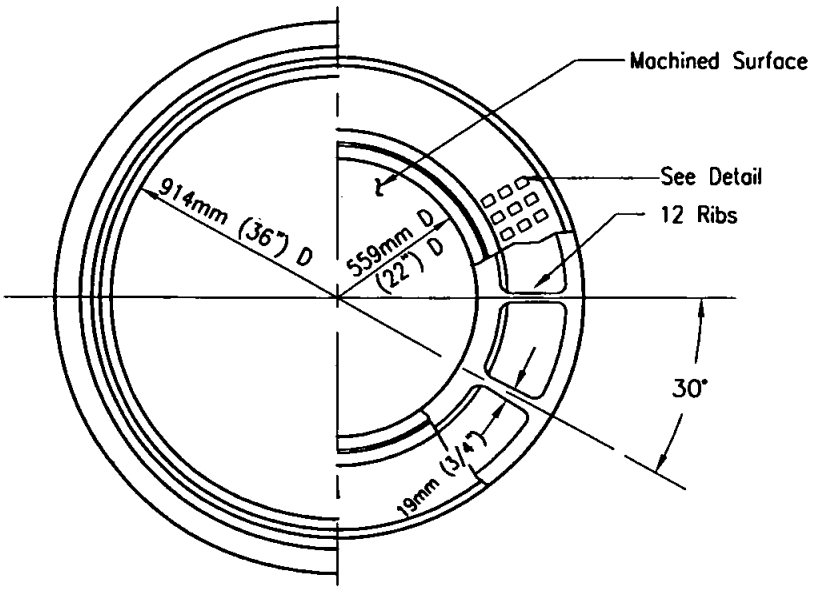

HALF PLAN FRAME & COVER

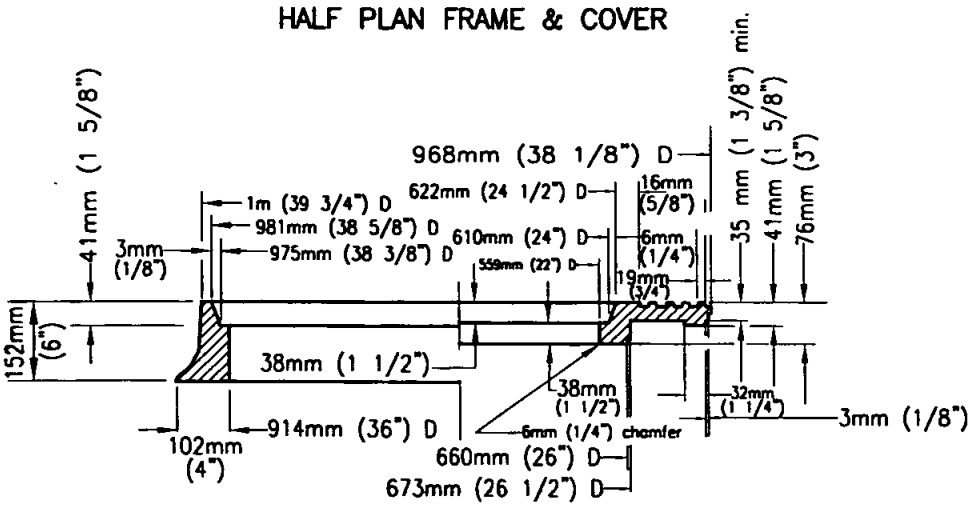

HALF SECTION FRAME & COVER

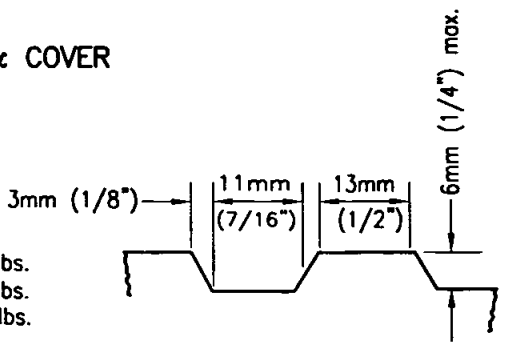

DETAIL

NOTES

1. Frame and cover shall be cast iron. Cast iron shall conform to ASTM 48, Class 35B.
2. Weights:

Frame	142.4kg (314)	–	164.6kg (363) lbs.
Outer Cover	129.3kg (285)	–	149.7kg (330) lbs.
Inner Cover	66.7kg (147)	–	77.5kg (171) lbs.

3. Machine all matching surfaces and seats of frame and cover to prevent rocking.
4. Imported frames and covers shall have the country of origin marked in compliance with federal regulations.

Revision	By	Approved	Date
ORIGINAL		Kercheval	12/75
Add Metric		T. Stanton	03/03
Reviewed		T. Stanton	04/06

SAN DIEGO REGIONAL STANDARD DRAWING

914mm (36") MANHOLE FRAME AND TWO CONCENTRIC COVERS HEAVY DUTY

RECOMMENDED BY THE SAN DIEGO REGIONAL STANDARDS COMMITTEE

T. Stanton 3/01/2003

Chairperson R.C.E. 19246 Date

DRAWING NUMBER **M-3**

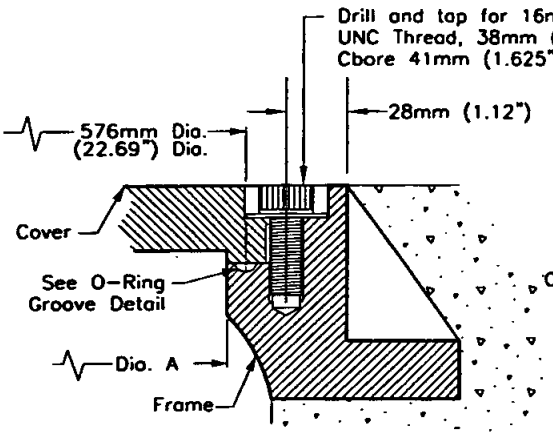

M-1 Detail:
COVER TO FRAME

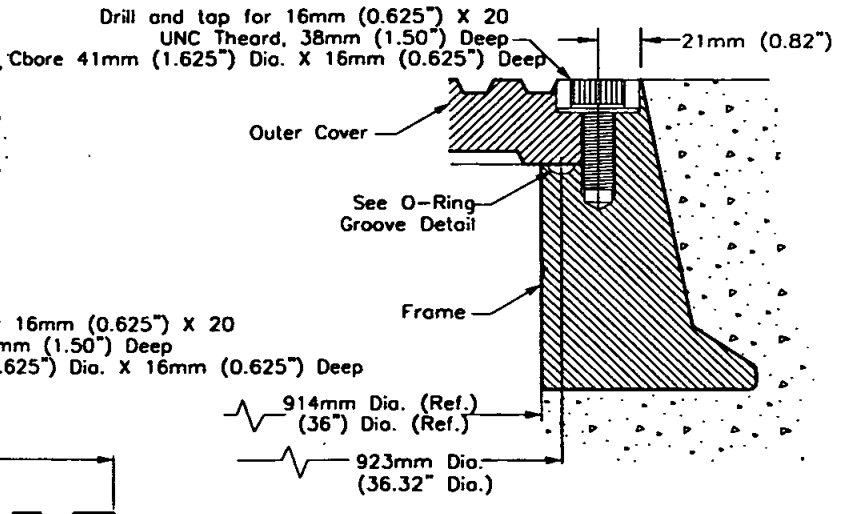

M-3B Detail:
OUTER COVER TO FRAME

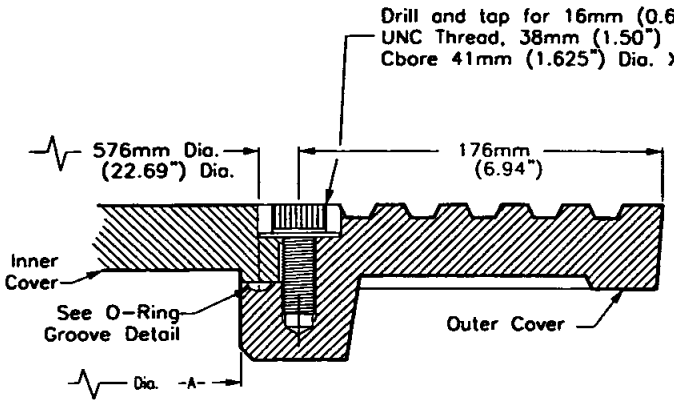

M-3A Detail:
INNER COVER TO OUTER COVER

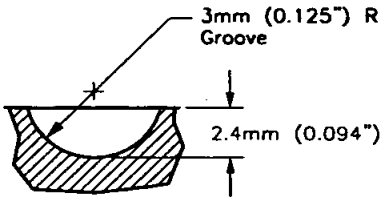

NEOPRENE O-RING
GROOVE DETAIL

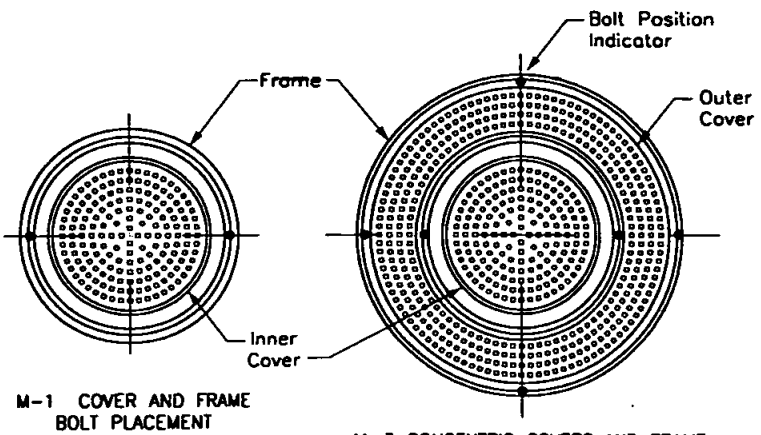

M-1 COVER AND FRAME
BOLT PLACEMENT
(See Note 3)

M-3 CONCENTRIC COVERS AND FRAME
BOLT PLACEMENT
(See Note 3)

NOTES:

1. 16mm (0.625") X 20 UNC THREAD, 316 STAINLESS STEEL SOCKET HEAD CAP SCREW AND 38mm (1.50") O.D. X 17mm (0.687") I.D. X 0.078 THICK 316 STAINLESS STEEL WASHER.
2. 6mm (0.25") NEOPRENE O-RING GASKET SHALL BE GLUED INTO MACHINED GROOVE. GLUE SHALL MEET THE REQUIREMENTS OF MIL-M-81288 (AMEND. 1)
3. BOLTDOWN PATTERNS:
   - M-1 DETAIL (610mm (24") COVER & FRAME): INSTALL TWO (2) BOLTS AT 180 DEGREES.
   - M-3A DETAIL (CONCENTRIC COVERS): BETWEEN INNER AND OUTER COVERS INSTALL TWO (2) BOLTS AT 180 DEGREES.
   - M-3B DETAIL (OUTER COVER & FRAME): BETWEEN OUTER COVER & FRAME INSTALL FOUR (4) BOLTS AT 90 DEGREES.

Revision	By	Approved	Date
ORIGINAL		Parkinson	2/95
Add Metric		T. Stanton	03/03
Reviewed		T. Stanton	04/06

SAN DIEGO REGIONAL STANDARD DRAWING

MANHOLE COVER - LOCKING DEVICE

RECOMMENDED BY THE SAN DIEGO REGIONAL STANDARDS COMMITTEE

T. Stanton 3/10/2003

Chairperson R.C.E. 19246 Date

DRAWING NUMBER **M-4**

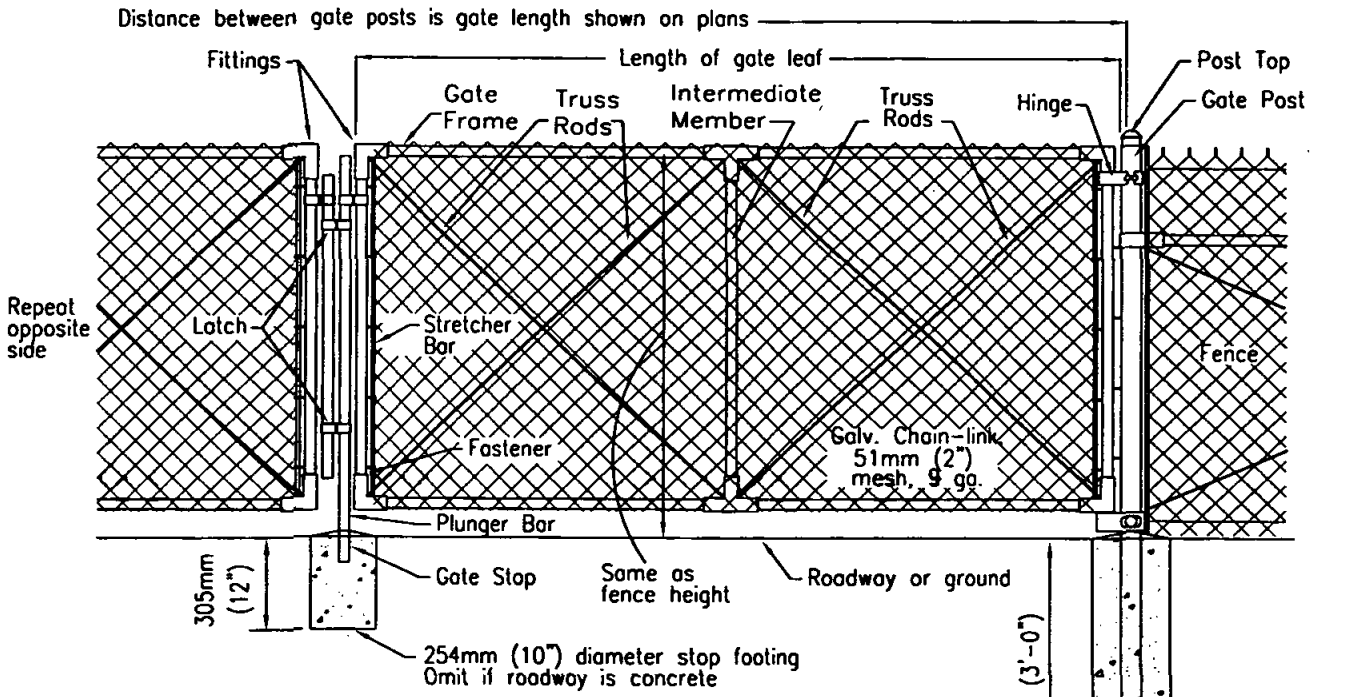

HALF ELEVATION DOUBLE SWING GATE

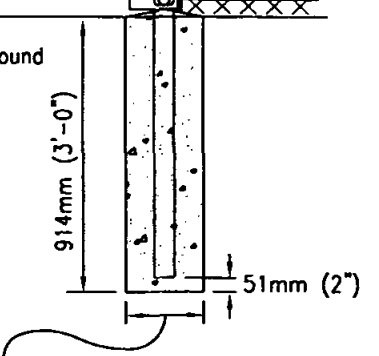

NOTES

1. All footings shall be 309kg/M^3-C-22-Mpa (520-C-2500) concrete.
2. The following items shall be furnished and installed only when shown on the plans and/or called for in the special provisions: a. Barbed wire
   b. Extension post
3. Chain link fence shall conform to Section 206-6 of the Standard Specification for Public Works Construction unless specifically noted on this drawing.

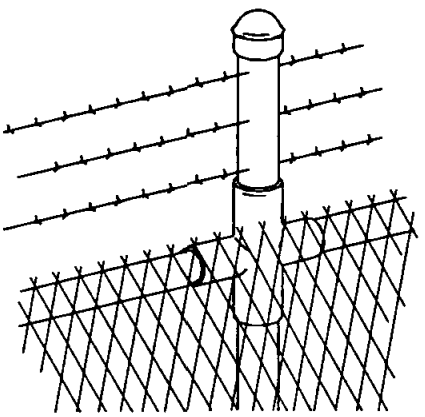

EXTENSION POST AND BARBED WIRE

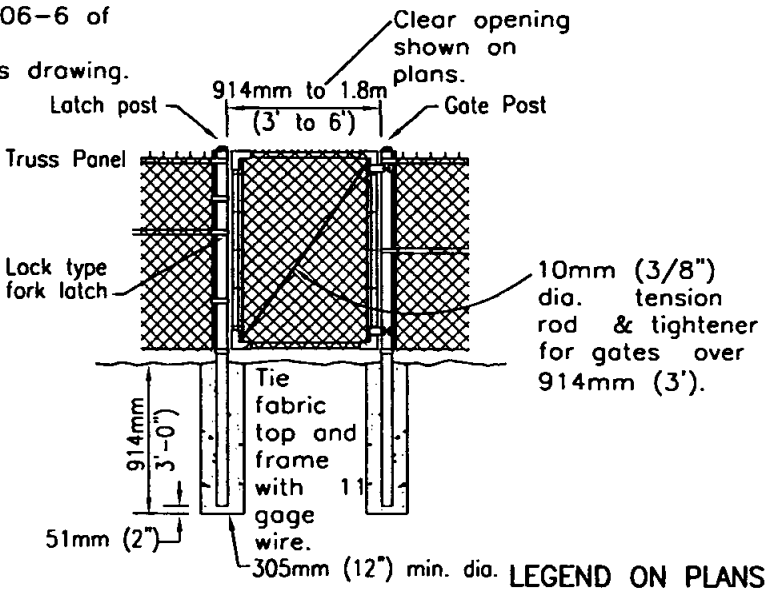

WALK GATE

LEGEND ON PLANS

Revision	By	Approved	Date
ORIGINAL		A.Kercheval	12/75
Add Metric		T. Stanton	03/03
Reviewed		T. Stanton	04/06

SAN DIEGO REGIONAL STANDARD DRAWING

CHAIN LINK GATE

RECOMMENDED BY THE SAN DIEGO REGIONAL STANDARDS COMMITTEE

T. Stanton 3/10/2003

Chairperson R.C.E. 19246 Date

DRAWING NUMBER M-5

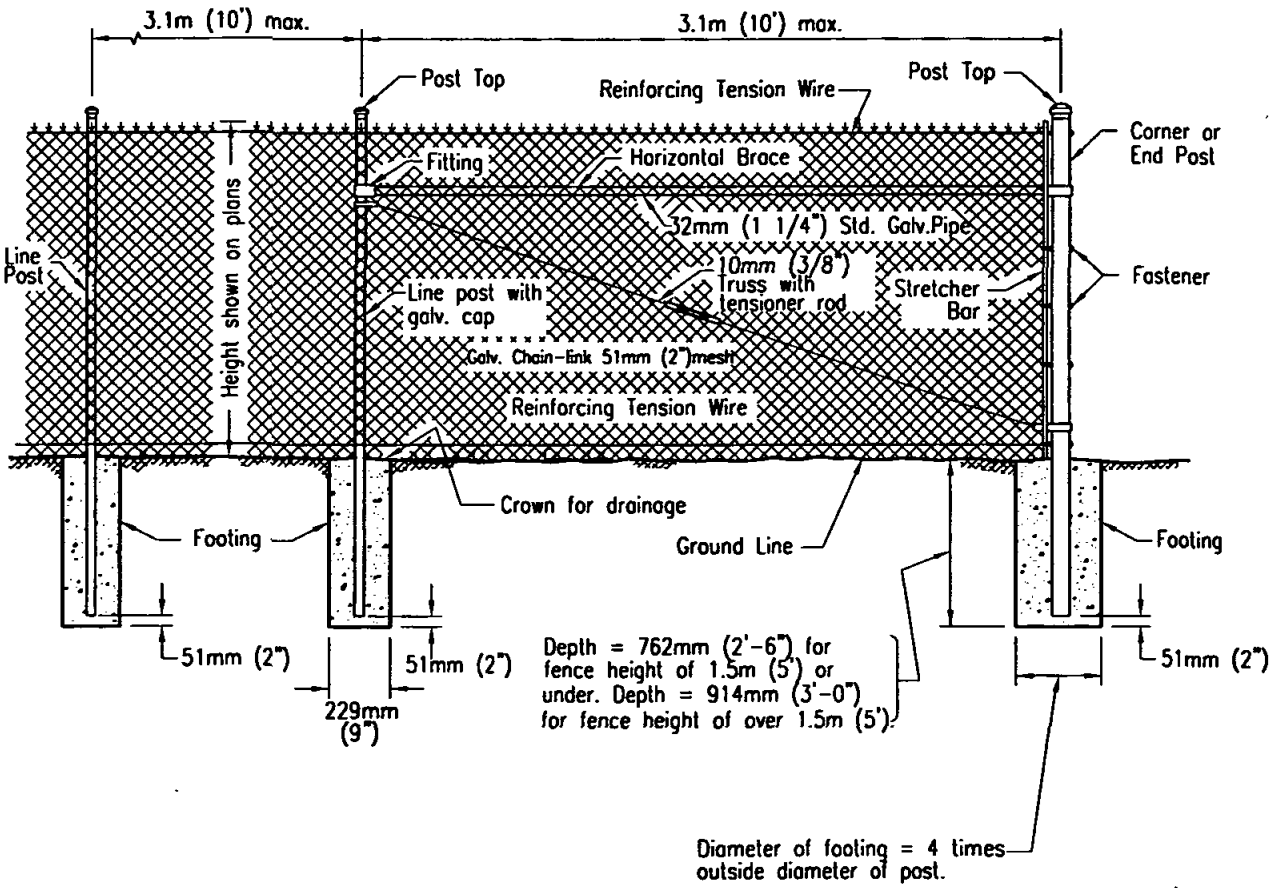

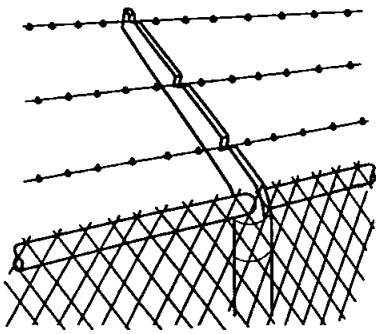

EXTENSION ARM AND BARBED WIRE

NOTES

1. All footings shall be 309kg/M^3-C-22-Mpa (520-C-2500) concrete.
2. The following items shall be furnished and installed only when shown on the plans and/or called for in the special provisions.
   a. Barbed Wire
   b. Extension Arm
   c. Top Horizontal Rail
3. Chain link fence shall conform to Section 206-6 of the Standard Specifications for Public Works Construction unless specifically noted on this drawing.
4. See Standard Drawing M-20 for additional details.

LEGEND ON PLANS

—O—×—×—×—O—

Revision	By	Approved	Date
ORIGINAL		A.Kercheval	12/75
Add Metric		T. Stanton	03/03
Reviewed		T. Stanton	04/06

SAN DIEGO REGIONAL STANDARD DRAWING

CHAIN LINK FENCE

RECOMMENDED BY THE SAN DIEGO REGIONAL STANDARDS COMMITTEE

T. Stanton 3/10/2003

Chairperson R.C.E. 19246 Date

DRAWING NUMBER **M-6**

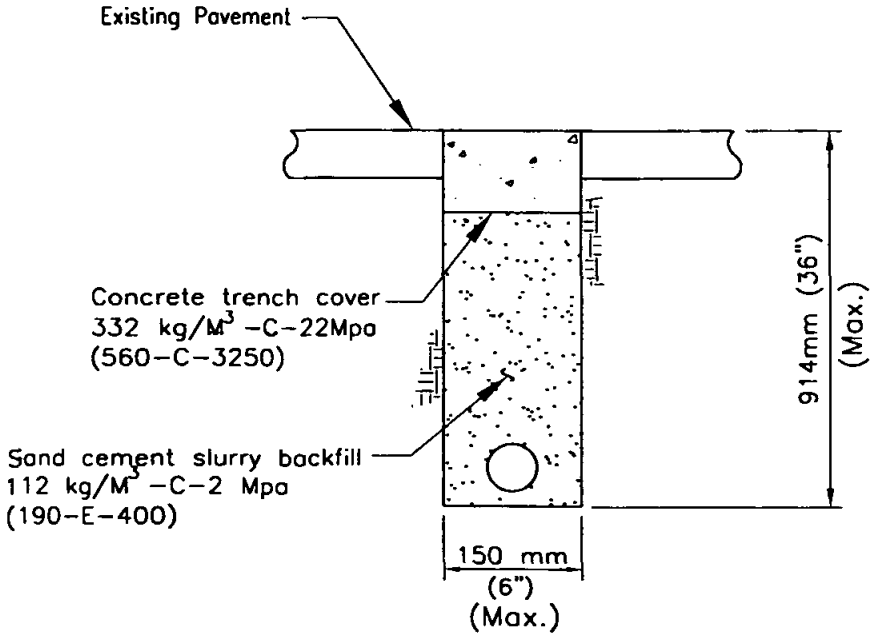

NOTES

1. Concrete encasement or sand cement slurry backfill shall have a minimum slump of 102mm (4").
2. Sand cement slurry backfill shall be thoroughly consolidated to encase conduits. Tampers or vibrators shall be used.
3. Concrete shall be screeded off to match pavement grade and floated to assure proper edge match.
4. Existing pavement will not require saw cutting when using rockwheel for excavation except when the existing pavement is concrete and trench finish is concrete.
5. All cuts shall be parallel or perpendicular to street centerline, when practical.
6. Allow concrete backfill or concrete trench cover 7 calendar days minimum, but no longer than 30 calendar days to cure and dry before applying any road surface finishes.
7. In major or prime arterial streets, an approved set accelerating admixture, such as calcium chloride, may be used only with prior approval of the Agency's Engineer otherwise the contractor shall protect the trench with the approval of the agency's Engineer.
8. See drawing G-33 for narrow trench resurfacing.
9. See table on drawing M-15 for standard minimum conduit depths.

Revision	By	Approved	Date
ORIGINAL		Hashemian	9/02
Add Metric		T. Stanton	03/03
Reviewed		T. Stanton	04/06

SAN DIEGO REGIONAL STANDARD DRAWING

NARROW TRENCHES
TRENCHING & BACKFILLING

RECOMMENDED BY THE SAN DIEGO REGIONAL STANDARDS COMMITTEE

T. Stanton 3/10/2003

Chairperson R.C.E. 19246 Date

DRAWING NUMBER **M-7**

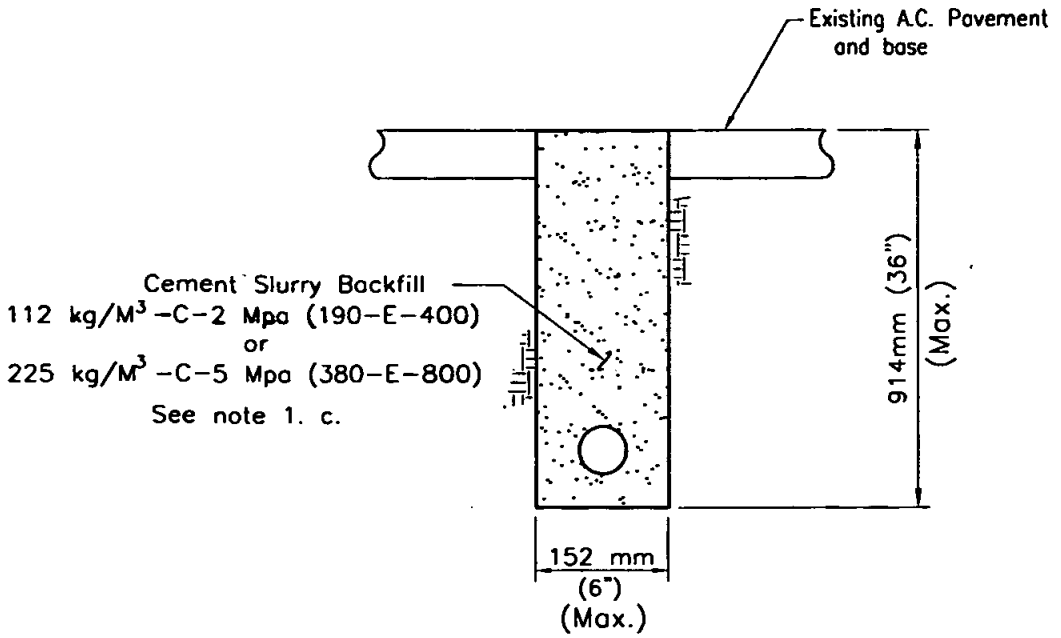

NOTES

1. Cement Slurry Backfill:
   a. Cement slurry backfill shall have a maximum slump of 102 mm (4").
   b. Cement slurry backfill shall be thoroughly consolidated to encase conduits. Tampers or vibrators shall be used.
   c. Cement slurry backfill shall be as follows:
      Alleys and local residential streets ..... Class 112 kg/M³ -C-2 Mpa (190-E-400)
      All other streets ..... Class 225 kg/M³ -C-5 Mpa (380-E-800)
2. Existing A.C. pavement will not require sawcutting when using rockwheel for excavation.
3. All cuts shall be parallel or perpendicular to street centerline, when practical.
4. See drawing G-33 for narrow trench resurfacing.
5. See table on drawing M-15 for standard minimum conduit depths.

Revision	By	Approved	Date
ORIGINAL		Hashemian	9/02
Add Metric		T. Stanton	03/03
Reviewed		T. Stanton	04/06

SAN DIEGO REGIONAL STANDARD DRAWING

NARROW TRENCHES
TRENCHING & BACKFILLING

RECOMMENDED BY THE SAN DIEGO REGIONAL STANDARDS COMMITTEE

T. Stanton 3/01/2003

Chairperson R.C.E. 19246 Date

DRAWING NUMBER **M-7A**

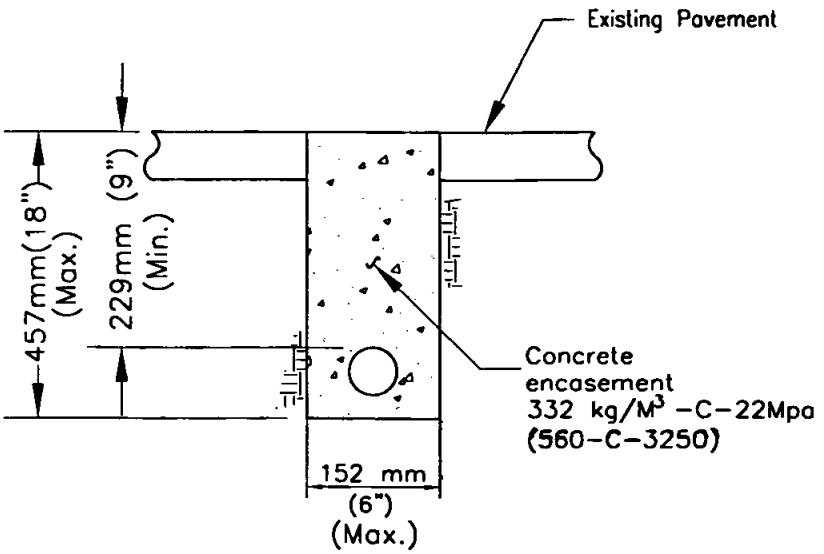

NOTES

1. Concrete encasement or backfill shall have a minimum slump of 102 mm (4").
2. Concrete encasement and/or sand cement slurry backfill shall be thoroughly consolidated to encase conduits. Tampers or vibrators shall be used.
3. Concrete shall be screeded off to match pavement grade and floated to assure proper edge match.
4. Existing pavement will not require saw cutting when using rockwheel for excavation except when the existing pavement is concrete and trench finish is concrete.
5. All cuts shall be parallel or perpendicular to street centerline, when practical.
6. Allow concrete backfill or concrete trench cover 7 calendar days minimum, but no longer than 30 calendar days to cure and dry before applying any road surface finishes.
7. In major or prime arterial streets, an approved set accelerating admixture, such as calcium chloride, may be used only with prior approval of the Agency's Engineer otherwise the contractor shall protect the trench with the approval of the Agency's Engineer.
8. This type of trech shall be permitted for supply cables of 750 volts or less. See California Public Utility Commission General Order No. 128, Rule 33.4 D.(1)(b) and where the conduit can not be placed at the proper recommeded depth.
9. See drawing G-33 for narrow trench resurfacing.
10. This detail shall be used only when there is underground conflicts. See table on drawing M-15 for standard minimum conduit depths.

Revision	By	Approved	Date
ORIGINAL		Hashemian	9/02
Add Metric		T. Stanton	03/03
Reviewed		T. Stanton	04/06

SAN DIEGO REGIONAL STANDARD DRAWING

NARROW TRENCHES
TRENCHING & BACKFILLING
SHALLOW CONDUIT DEPTH

RECOMMENDED BY THE SAN DIEGO REGIONAL STANDARDS COMMITTEE

T. Stanton 3/10/2003

Chairperson R.C.E. 19246 Date

DRAWING NUMBER **M-8**

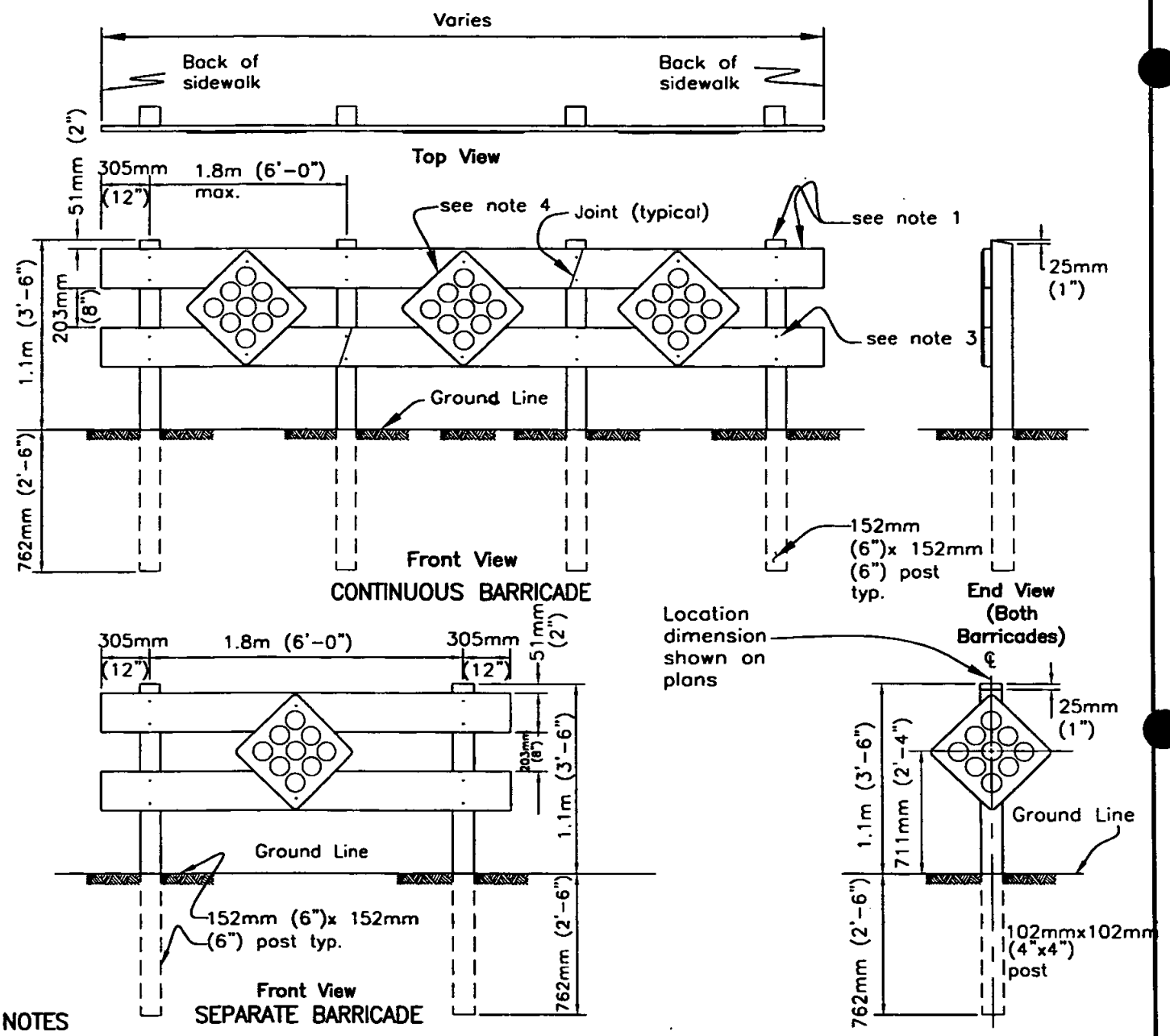

NOTES

1. Posts to be structural grade redwood or pressure treated (with wood preservative) Douglas Fir, surfaced four sides; cross pieces to be 51mm (2")x 203mm (8") select grade Douglas Fir, surfaced four sides.
2. All exposed portions of barricades shall be painted with two coats of white exterior enamel over prime coat.
3. Connections shall be made with 10mm (3/8") x 152mm (6") galvanized lag screws with one (1) washer each.
   Reflector sign fastners to be 10mm (3/8") x 38mm (1 1/2") galvanized lag screws.
4. Reflector signs – California Type N. Size 457mm (18")x457mm (18") – Yellow with nine (9) –83mm (3 1/4") reflectors (center mount).
   a. Reflectors shall be red for use on dead end streets, in all other cases they shall be yellow. Reflector material shall be plastic or other approved reflectorized material.
   b. Sign material shall be aluminum alloy 6061–T6 or 5052–H38, aluminum thickness 1.6mm (0.063").
5. 1.8m (6') long hot section metal post per Caltrans Std. Plan A74–A optional for guard post.

LEGEND ON PLANS

Barricade

Guard Post

Revision	By	Approved	Date
ORIGINAL		Kercheval	12/75
Add Metric		T. Stanton	03/03
Reviewed		T. Stanton	04/06

SAN DIEGO REGIONAL STANDARD DRAWING

GUARD POST AND BARRICADE

RECOMMENDED BY THE SAN DIEGO REGIONAL STANDARDS COMMITTEE

T. Stanton 3/10/2003

Chairperson R.C.E. 19246 Date

DRAWING NUMBER **M-9**

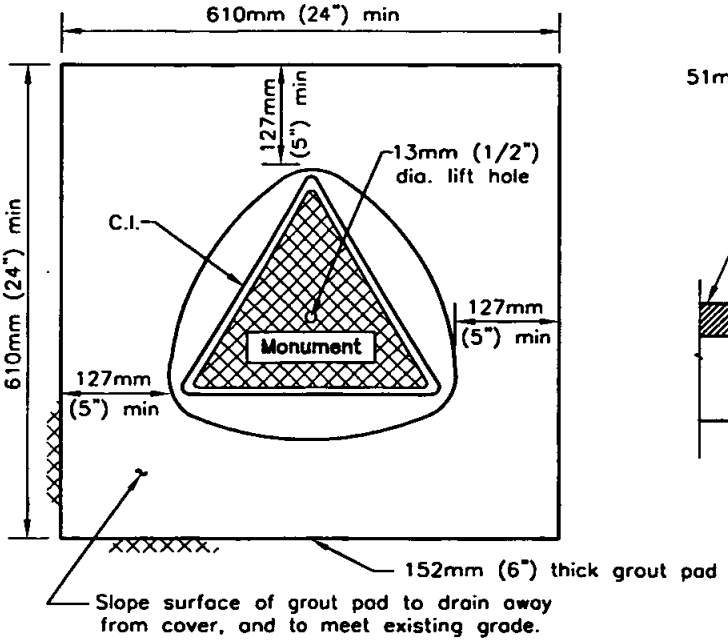

PLAN–IN UNPAVED AREA

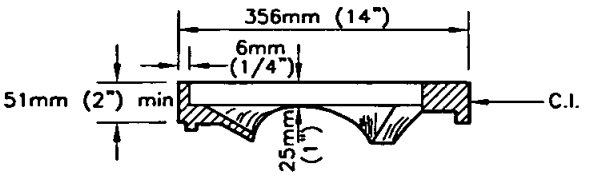

RISER RING

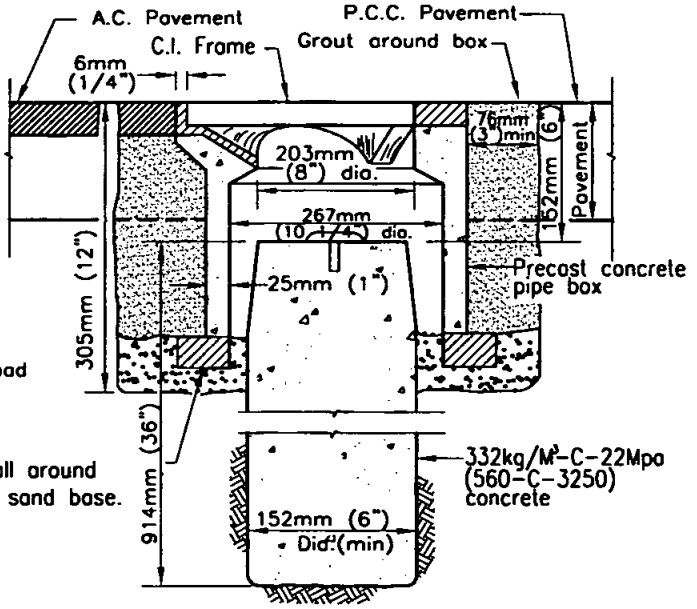

Brick support all around on 51mm (2") sand base.

TYPICAL MONUMENT SECTION IN PAVED AREA

NOTES

1. Cover and frame to be cast integrally with pipe box.
2. Monument base may be cast in place or precast.
3. Form and taper exposed upper 152mm (6") of cast–in–place base to a top diameter of 127mm (5"). (Precast base shall be sand backfilled).
4. Monument marker shall be a domed brass, 76mm (3") in diameter.
5. Monument Location:

a) Set on all centerline intersections unless actual location is modified by the Agency and shown in modified location on map. When centerline intersection is impractical, offset 1.5m (5') on centerline of major street, (see detail at right). If neither centerline can be occupied, two monuments will be set in line around the front on the perimeter of a 3m (10') diameter circle, whose center is the point.

b) Set on centerline at intervals not exceeding 305m (1000') on straight runs.

c) Set on centerline at points of curvature.

d) Set on center at center points of cul–de–sacs.

e) Set on centerline when center point of cul–de–sac is offset from centerline.

f) These standards may be modified at the discretion of the Agency in cases where strict compliance therewith results in more monuments than it considers necessary. The following technique for reducing the number of monuments will be routine.

g) Substitution of one monument on the "Point of Intersection" for monuments at the "Beginning of Curve" and the "Ending of Curve" when the "Point of Intersection" falls within the pavement area.

h) Deletion of any monument otherwise required by these standards when its position can be determined by turning one angle from a point on a straight line between two other monuments, providing such point is not more than 91.4m (300') from the point on which the deleted monument would have been placed.

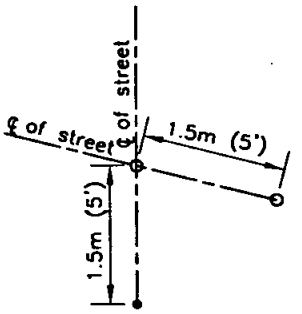

Alteration location of monument. Tie distances shown on final subdivision map if alternate location is used.

LOCATION OF STREET SURVEY MONUMENT

Revision	By	Approved	Date
ORIGINAL		Kercheval	12/75
Add Metric		T. Stanton	03/03
Reviewed		T. Stanton	04/06

SAN DIEGO REGIONAL STANDARD DRAWING

STREET SURVEY MONUMENT

RECOMMENDED BY THE SAN DIEGO REGIONAL STANDARDS COMMITTEE

T. Stanton 3/01/2003

Chairperson R.C.E. 19246 Date

DRAWING NUMBER M-10

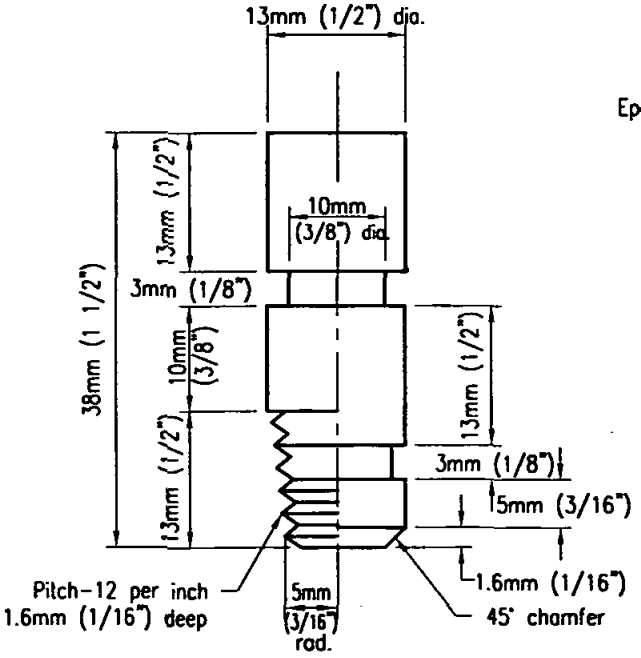

TYPE-A TYPE-B
ELEVATION

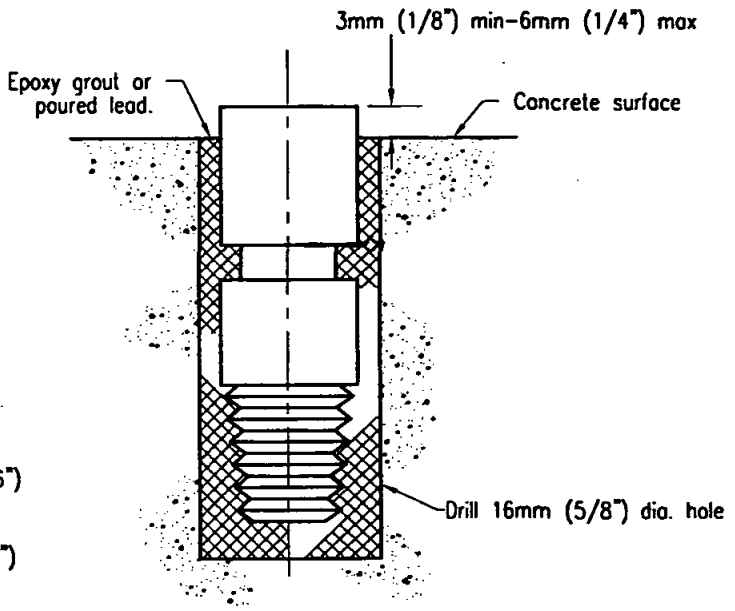

INSTALLATION IN EXISTING CONCRETE
(Typical for Type A or B)

NOTES

1. Material- Brass A.S.T.M. B-16. All machine tolerances ±.4mm (1/64") machine finish.
2. May be installed in fresh concrete at time of installation of concrete structure.
3. Location-in most stable, permanent location in vicinity, such as in base for street light standard or traffic signal (behind sidewalk), in curb (not near joint, on curve or near trees), on top of drainage headwall, in foundation for building or retaining wall or in concrete pads for transformers, pump stations etc.

Revision	By	Approved	Date
ORIGINAL		Kercheval	12/75
Add Metric		T. Stanton	03/03
Reviewed		T. Stanton	04/06

SAN DIEGO REGIONAL STANDARD DRAWING

BENCH MARK - BRASS PLUG

RECOMMENDED BY THE SAN DIEGO REGIONAL STANDARDS COMMITTEE

T. Stanton 3/01/2003

Chairperson R.C.E. 19246 Date

DRAWING NUMBER **M-11**

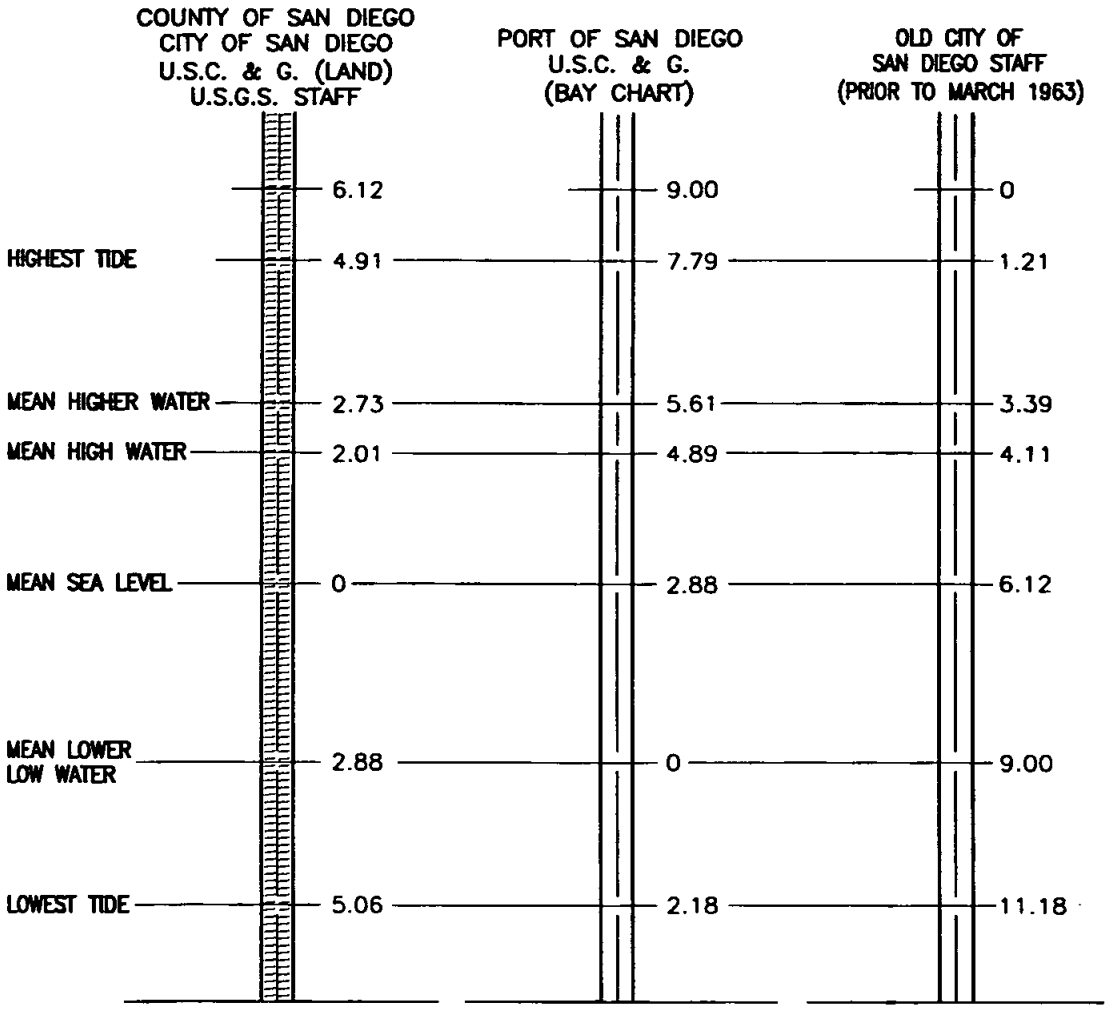

LEGEND

U.S.C. & G. = United States Coast and Geodetic Survey.
U.S.G.S. = United States Geological Survey.
MEAN HIGH WATER = Mean of all high water in San Diego Bay.
MEAN HIGHER WATER = Mean of all higher water in San Diego Bay. Bay charts and topography up to the mean high tide based on zero at the mean lower low water.

SOURCE

Data based on U.S.C. & G. "Sea level Datum of 1923".

Revision	By	Approved	Date
ORIGINAL		Kercheval	12/75
Add Metric		T. Stanton	03/03
Reviewed		T. Stanton	04/06

SAN DIEGO REGIONAL STANDARD DRAWING

DATUMS

RECOMMENDED BY THE SAN DIEGO REGIONAL STANDARDS COMMITTEE

T. Stanton 3/01/2003

Chairperson R.C.E. 19246 Date

DRAWING NUMBER **M-12**

FOUND MONUMENTS

Found monuments must denote the character of the monument, how it is identified and the record, or no record as applicable.

SET MONUMENTS – Criteria for Locating and Character

On subdivision boundaries, permanent monuments are required; and must be shown on the map at intervals as specified by the local agency. The location of such points that are inacceptable or will be destroyed by construction may be established by ties to permanent reference monuments shown on the final map.

A permanent monument shall be no less substantial than the following:

a. An iron pipe of minimum two inch diameter not less than 610mm (2') in length placed upright in the ground so that the top of said pipe is flush with the surface. Said pipe shall be filled with a metal or cement plug at least three inches in depth and centered with a metal tack and disc; or

b. A metal plug with tack and disc set flush with the surface in portland cement concrete sidewalk, curb or pavement; or other monument satisfactory to the City Engineer or County Surveyor. The metal plug shall be anchored 25mm (1") deep in sidewalk.

Lot corners and points of curves along street and alley right of way lines where portland cement concrete sidewalks, curbs or pavement exist, or will be constructed as part of the subdivision requirements, shall be identified with tack and disc set flush with the surface along an extension of the lot line at an approved offset, to be measured radially or at right angles to the right of way line in said sidewalk, curb pavement. In case the sideline of the lot is not radial or at right angles to the right of way line a disc shall be set along an extension of the sideline at an offset to be measured radially or at right angles to the right of way line. Where no such concrete work exists, and none will be required to be constructed, all lot corners, angle points and points of curve shall be marked with a monument no less substantial than a one-half inch steel rod or pipe, 457mm (18") long, set flush with the surface.

LEGEND

● Fd 51mm (2") Iron Pipe Marked RCE XXXX or per Map XXX unless otherwise noted

▲ Fd Street Survey Monument Stamped RCE XXXX or LS XXXX

◎ Set 51mm (2") x 610mm (24") Iron Pipe Marked RCE XXXX or LS XXXX

□ Set Lead and Disc Stamped RCE XXXX or LS XXXX

○ Set 13mm (½") x 457mm (18") Iron Pipe Marked RCE XXXX or LS XXXX

△ Set Street Survey Monument Stamped RCE XXXX or LS XXXX per Standard Drawing M-10

The addition of other symbols is permissible where such will result in a clearer map.

The following notes should be used in the legend where applicable.

Unless otherwise shown on this map:

1. All lot corners except as described below will be monumented by a 13mm (½") by 457mm (18") iron pin stamped (RCE or LS number).

2. Lot corners along the sideline of dedicated street right of way will be monumented by a disc stamped (RCE or LS number), set along an extension of the lot line at an offset of __ in the (curb, sidewalk). The offset shall be measured radially, or at right angles, to the right of way line. (See example below.)

3. All points of curve of the sidelines of dedicated streets will be monumented by a disc stamped (RCE or LS number), set at an offset of __ in the (curb, sidewalk). The offset shall be measured radially.

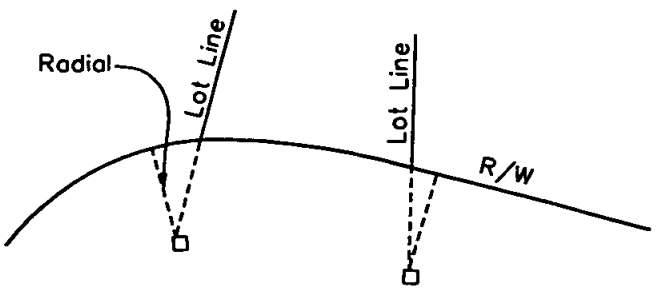

EXAMPLE OF OFFSET DISCS

Revision	By	Approved	Date
ORIGINAL		Kercheval	12/75
Add Metric		T. Stanton	03/03
Reviewed		T. Stanton	04/06

SAN DIEGO REGIONAL STANDARD DRAWING

SURVEY MONUMENTS

RECOMMENDED BY THE SAN DIEGO REGIONAL STANDARDS COMMITTEE

T. Stanton 3/01/2003

Chairperson R.C.E. 19246 Date

DRAWING NUMBER **M-13**

WEIGHT

1 Gram	= 15.4324 grains		1 Grain	=	0.0648 g.
1 Gram	= 0.0353 oz.		1 Once	=	28.3495 g.
1 Kg.	= 2.2046 lb.		1 Pound	=	0.4536 kg.
1 Kg.	= 0.0011 ton		1 Ton	=	907.1848 kg.
1 Ton (met)	= 1.1023 ton		1 Ton	=	0.9072 ton (met)

AREA

1 Sq. cm.	= 0.1550 sq. in.		1 Sq. in.	=	6.4516 sq. cm.
1 Sq. m.	= 10.7639 sq. ft.		1 Sq. ft.	=	0.0929 sq. m.
1 Sq. m.	= 1.1960 sq. yd.		1 Sq. yd.	=	0.8361 sq. m.
1 Hectare	= 2.4710 acres		1 Acre	=	0.4047 hectare
1 Sq. km.	= 0.3861 sq. mile		1 Sq. mile	=	2.5900 sq. km.
1 Sq. km.	= 247.10 acres		1 Acre	=	0.0040 sq. km.

VOLUME

1 Cu. cm.	= 0.0610 cu. in.		1 Cu. in.	=	16.3872 cu. cm.
1 Cu. m.	= 35.3134 cu. ft.		1 Cu. ft.	=	0.0283 cu. m.
1 Cu. m.	= 1.3079 cu. yd.		1 Cu. yd.	=	0.7646 cu. m.

CAPACITY

1 Liter	= 61.0250 cu. in.		1 Cu. in.	=	0.0164 liter
1 Liter	= 0.0353 cu. ft.		1 Cu. ft.	=	28.3162 liters
1 Liter	= 0.2642 gal. (U.S)		1 Gal.	=	3.7853 liters
1 Liter	= 0.0284 gal. (U.S.)		1 Bu.	=	35.2383 liters

LENGTH

1 MM.	= 0.0394 in.		1 In.	=	25.4000 mm.
1 CM.	= 0.3937 in.		1 In.	=	2.5400 cm.
1 Meter	= 3.2808 ft.		1 Ft.	=	0.3048 m.
1 Meter	= 1.0936 yd.		1 Yd.	=	0.9144 m.
1 Km.	= 0.6214 mile		1 Mile	=	1.6093 km.

METRIC PREFIX

MULTIPLE	PREFIX	MULTIPLE	PREFIX
1000000	mega	1/10	deci
1000	kilo	1/100	centi
100	hecto	1/1000	milli
10	deka	1/1000000	micro

TEMPERATURE

Degrees Fahrenheit = 9/5 (Degrees Celsius) + 32

Degrees Centigrade = 5/9 (Degrees Fahrenheit − 32)

Revision	By	Approved	Date
ORIGINAL		Kercheval	12/75
Add Metric		T. Stanton	03/03
Reviewed		T. Stanton	04/06

SAN DIEGO REGIONAL STANDARD DRAWING

METRIC EQUIVALENTS

RECOMMENDED BY THE SAN DIEGO REGIONAL STANDARDS COMMITTEE

T. Stanton 3/10/2003

Chairperson R.C.E. 19246 Date

DRAWING NUMBER **M-14**

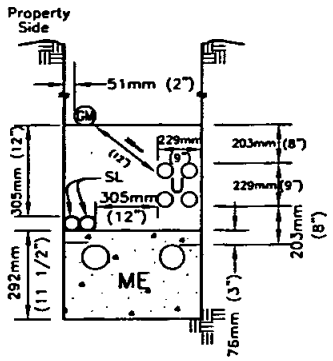

TYPE A

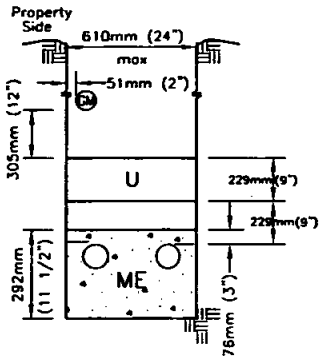

TYPE B

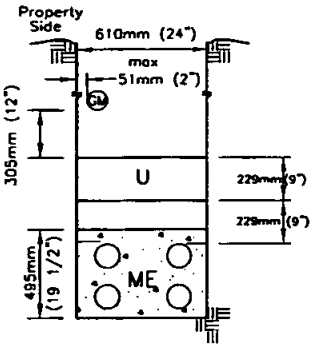

TYPE C

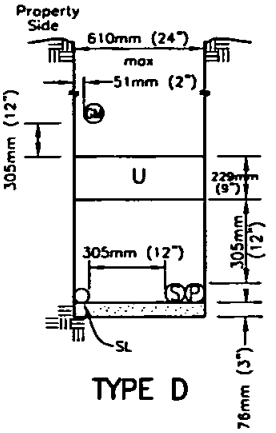

TYPE D

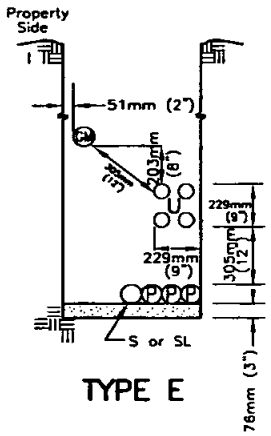

TYPE E

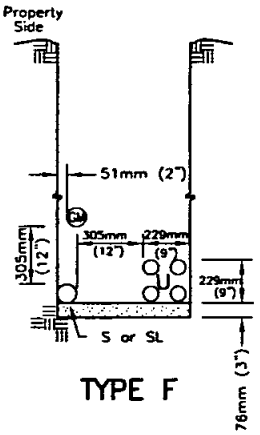

TYPE F

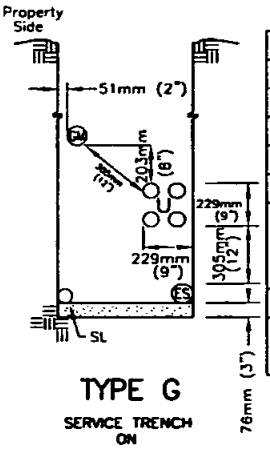

TYPE G

SERVICE TRENCH ON PUBLIC PROPERTY

	Legend	Minimum Cover
GM	Gas Main	762mm (30")
GS	Gas Service	762mm (30")
P	Primary Electric	1.1m (42")
S	Secondary Electric	762mm (30")
ES	Electric Service	762mm (30")
ME	Multiple Electric (P, S or ES in Spacers) Concrete Encased	610mm (24")
SL	Street Light (not series)	762mm (30")
U	CATV	610mm (24")
	TELCO	610mm (24")

NOTES

1. All dimensions are typical unless otherwise noted.
2. Generally utilities are to be installed under the applicable specifications for the particular utility and the specifications of the owner Agency.
3. The location of utilities as shown by the Standard Drawing shall in no way violate existing codes or regulations applicable to individual utilities.
4. Installation of sewer and/or water utilities are not permitted in the joint trenches shown above.
5. Minimum depth of gas pipe may, subject to gas company inspectors approval, be reduced to 610mm (24") where necessary to clear structure crossings.
6. Depth and width of trench varies.
7. CATV main or trunk line conduit required along all streets, except cul-de-sac streets less than 305m (1,000') in length which may be served by feeder lines only.
8. CATV 38mm (1-1/2") feeder conduit shall run across streets with each power service line and capped at edge of sidewalk.
9. All CATV terminals and conduits shall be terminated at generally accepted locations and marked. A map shall be filed with the appropriate agency showing the locations of the CATV system.
10. In no case shall CATV conduits be placed within 305mm (12") of gas lines, also conduits are not to be placed directly over gas lines.
11. Catv conduit may be placed with the TELCO conduit provided the TELCO minimum depth is held.

Revision	By	Approved	Date
ORIGINAL		Parkinson	9/88
Add Metric		T. Stanton	03/03
Reviewed		T. Stanton	04/06

SAN DIEGO REGIONAL STANDARD DRAWING

JOINT TRENCH LOCATIONS

RECOMMENDED BY THE SAN DIEGO REGIONAL STANDARDS COMMITTEE

T. Stanton 3/01/2003

Chairperson R.C.E. 19246 Date

DRAWING NUMBER **M-15**

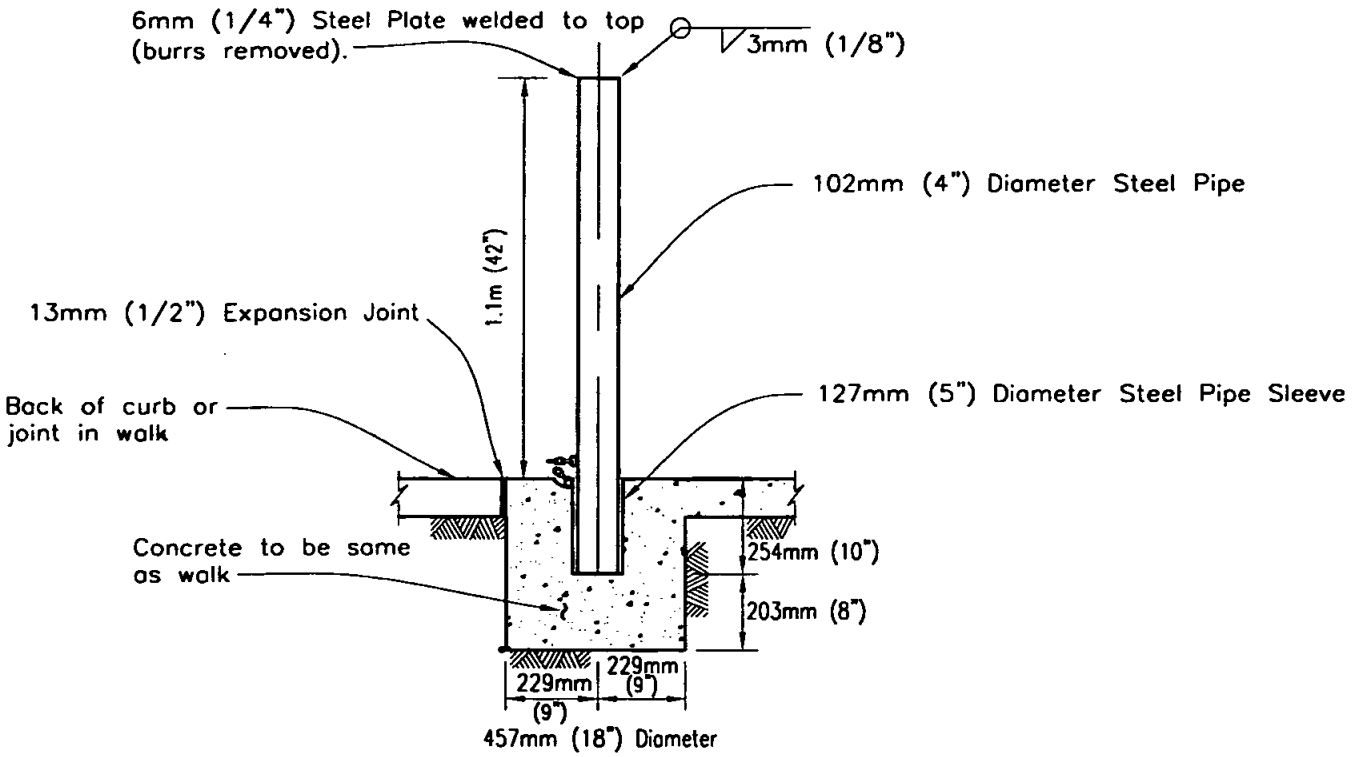

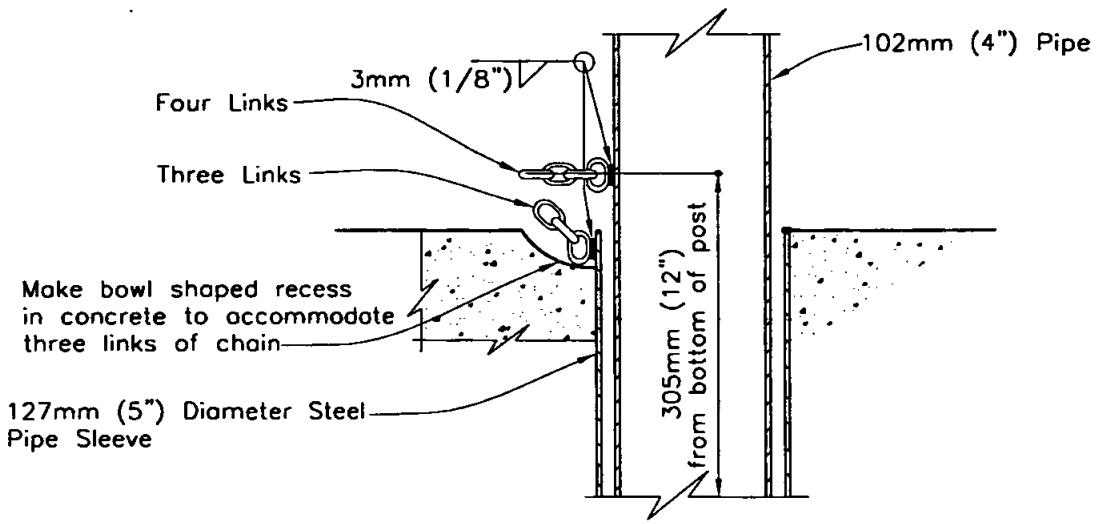

HASP DETAIL

NOTES

1. Chain to be 6mm (1/4") proof coil chain galvanized steel. Weld four links to post and three links to pipe sleeve.
2. All metal to be hot-dip galvanized after fabrication.

LEGEND ON PLANS

○

Revision	By	Approved	Date
ORIGINAL		Solomon	7/79
Add Metric		T. Stanton	03/03
Reviewed		T. Stanton	04/06

SAN DIEGO REGIONAL STANDARD DRAWING

DEMOUNTABLE POST

RECOMMENDED BY THE SAN DIEGO REGIONAL STANDARDS COMMITTEE

T. Stanton 3/10/2003

Chairperson R.C.E. 19246 Date

DRAWING NUMBER M-16

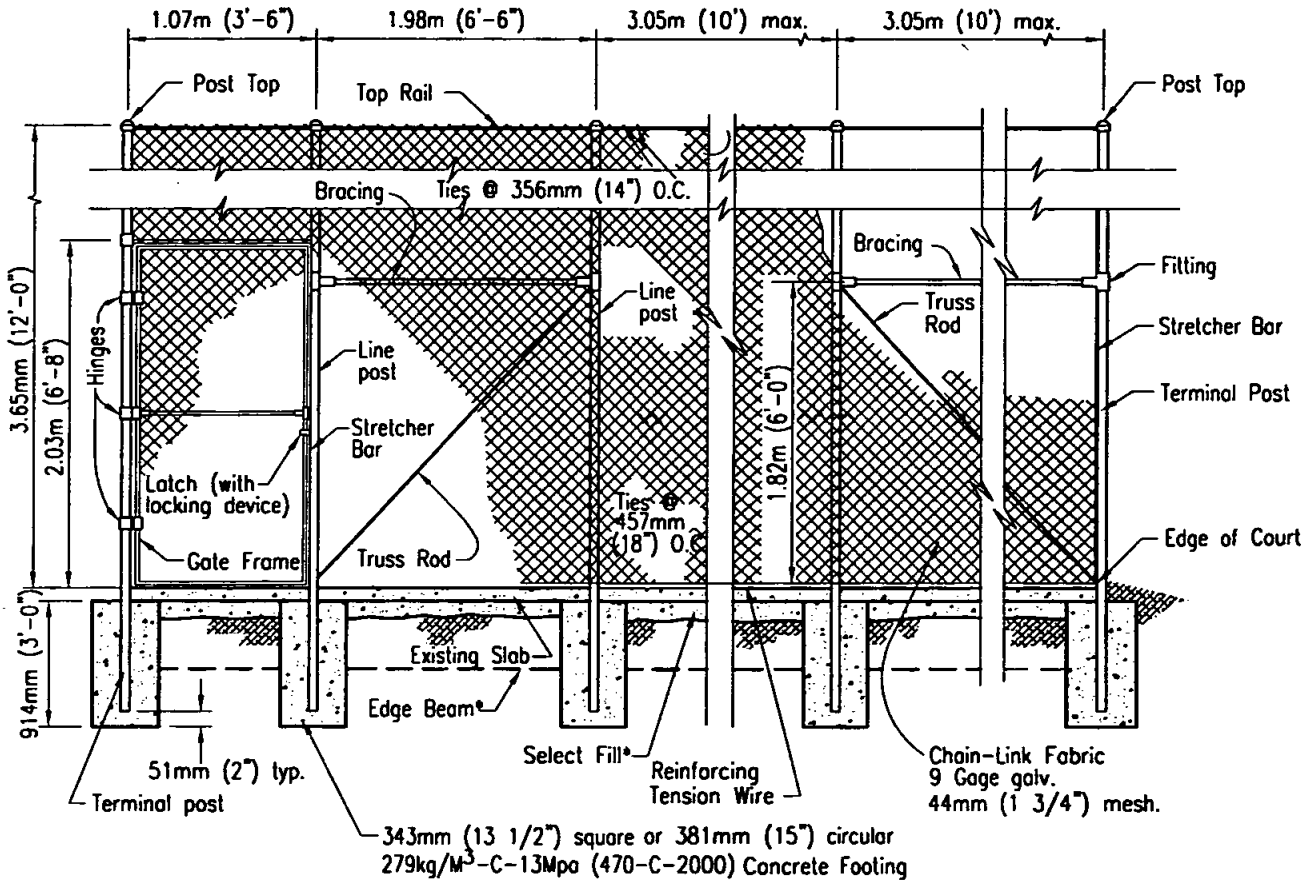

* For Edge Beam, Slab, and Select Fill details, see plans.

ELEVATION

DESCRIPTION	MIN. SIZE IN KILOGRAMS / (INCHES)	MIN. WEIGHT PER LIN FT IN KILOGRAMS / (LBS).
Line Post	60mm (2.375) O.D.	1.65kg (3.65)
Terminal Post	73mm (2.875) O.D.	2.63kg (5.79)
Top Rail	42mm (1.660) O.D.	1.03kg (2.27)
Bracing	42mm (1.660) O.D.	1.03kg (2.27)
Gate Frame	42mm (1.660) O.D.	1.03kg (2.27)

NOTE:
Chain link fabric shall be erected on the interior side of the courts.

CAUTION:
This Standard Drawing is not to be used if any wind screen is to be applied to the fence.

Revision	By	Approved	Date
ORIGINAL		Solomon	7/79
Add Metric		T. Stanton	03/03
Reviewed		T. Stanton	04/06

SAN DIEGO REGIONAL STANDARD DRAWING

TENNIS COURT FENCE CHAIN LINK

RECOMMENDED BY THE SAN DIEGO REGIONAL STANDARDS COMMITTEE

T. Stanton 3/10/2003

Chairperson R.C.E. 19246 Date

DRAWING NUMBER M-17

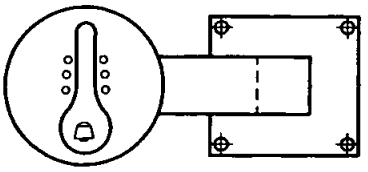

① Drinking Fountain – Haws model 3376 or approved equal.
② 10mm (3/8") dia. Expansion anchors with flat (recessed heads) screws 4 places.
③ 32mm (1 ¼") P.V.C. pipe with sweep 90° ell connection to fountain drain.
④ 241mm (9 ½") x 406mm (16") concrete yard box with hinged locking top (Brooks No. 3HL or equal) set on red brick foundation.
⑤ 102mm (4") x 12.2m (40') perforated plastic underdrain pipe, encased in 19mm (3/4") crushed rock.
⑥ 25mm (1") gate valve with red brass cross handle and union. Install as per Std. Dwg. I–12
⑦ 51mm (2") dia. galv. pipe sleeve with red brass lock cap per Std. Dwg. I–12
⑧ Rigid copper pipe from gate valve to fountain assembly connection.
⑨ Concrete pavement.

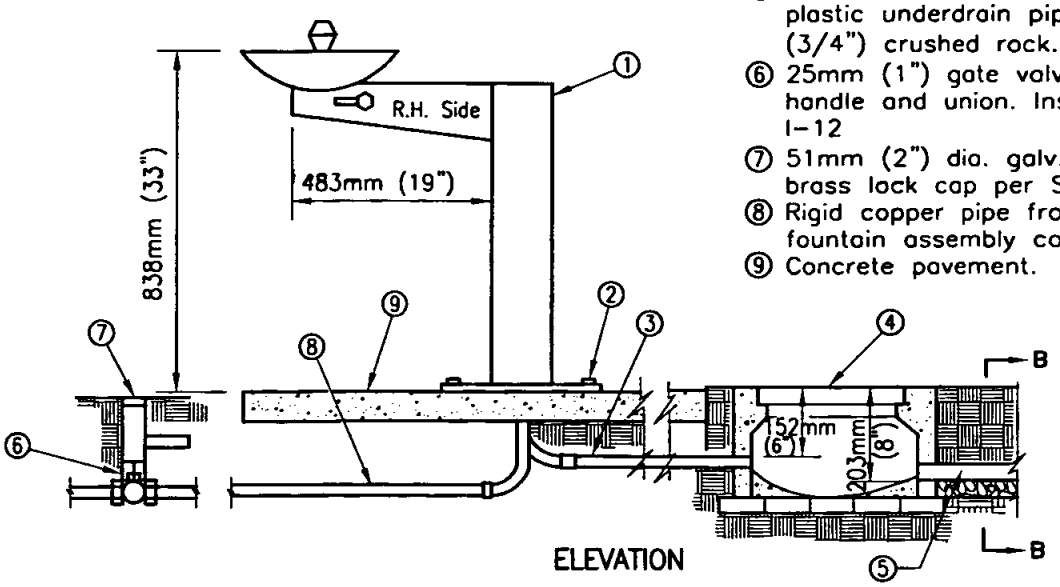

ELEVATION

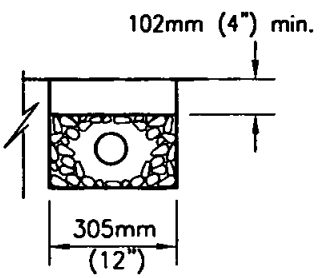

SECTION B–B

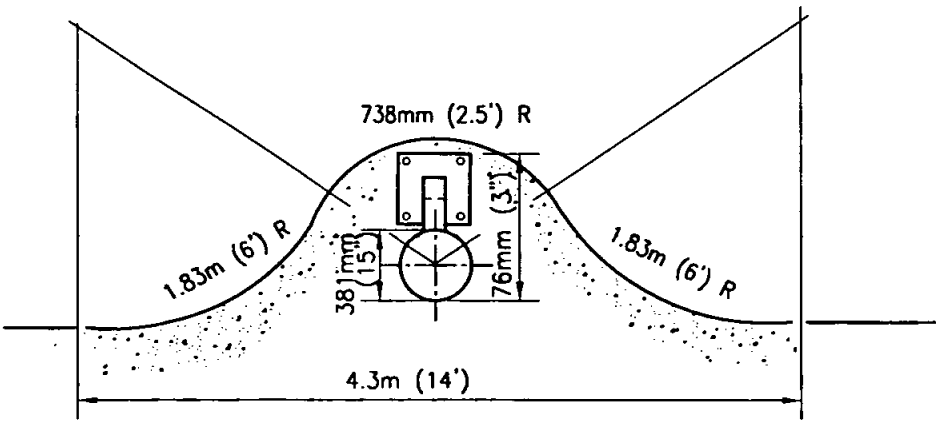

PLAN

NOTES

1. Install fountain so that right hand side faces prevailing wind.
2. Hand form a concrete bowl at bottom of yard box to facilitate sand clean out.
3. Perforated drain pipe and trench are to drain away from fountain at 1% min. slope. Keep drain in lawn areas.
4. Item no. 6 is a 25mm (1") gate valve. Use red brass bushing reducers to adapt to feed pipe.

LEGEND ON PLANS

Revision	By	Approved	Date
ORIGINAL		H. Hecht	10/82
Add Metric		T. Stanton	03/03
Reviewed		T. Stanton	04/06

SAN DIEGO REGIONAL STANDARD DRAWING

DRINKING FOUNTAIN

RECOMMENDED BY THE SAN DIEGO REGIONAL STANDARDS COMMITTEE

T. Stanton 3/10/2003

Chairperson R.C.E. 19246 Date

DRAWING NUMBER **M-18**

STREET LOCATIONS

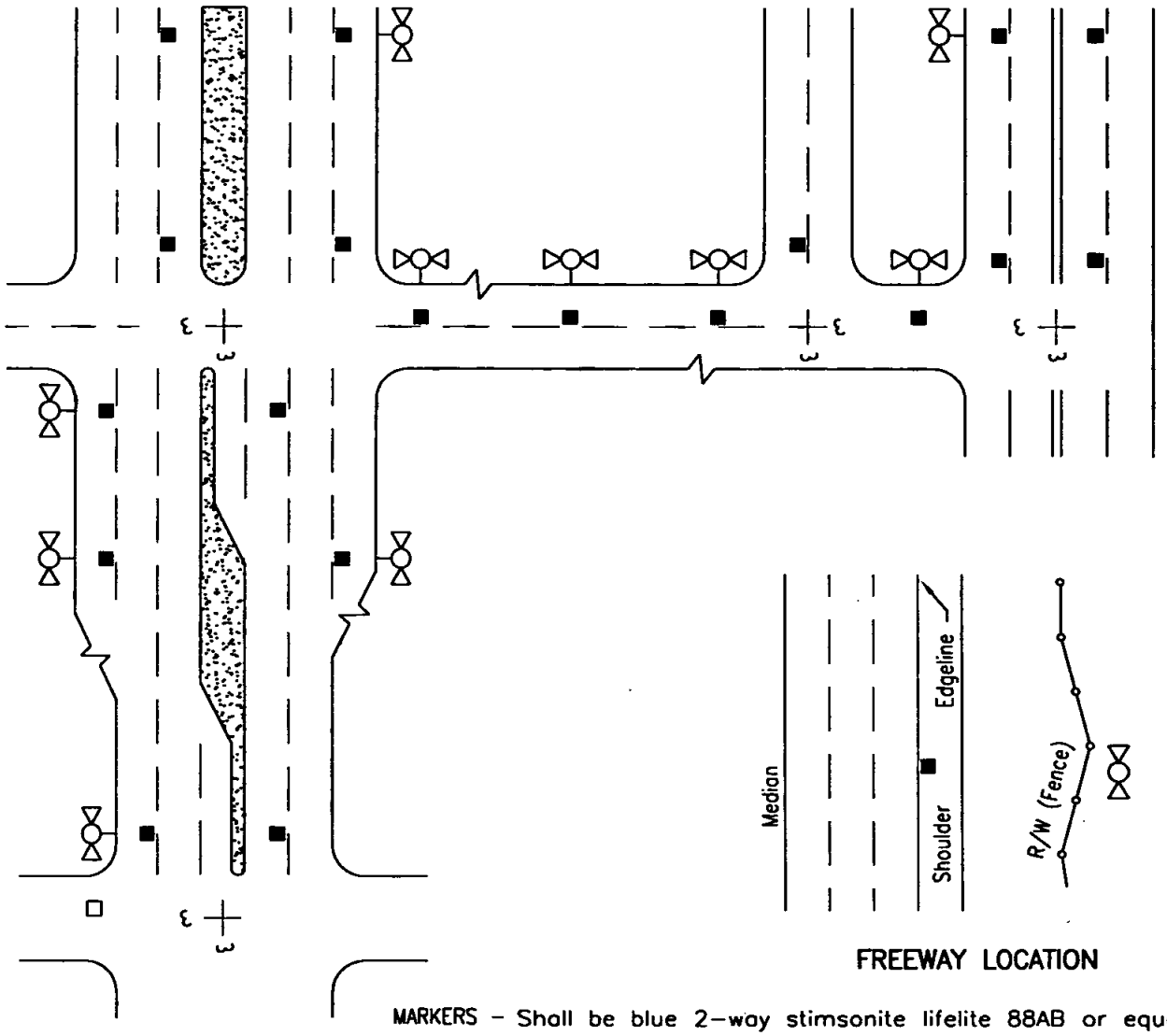

FREEWAY LOCATION

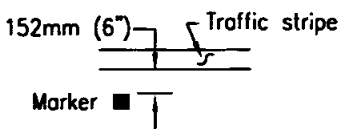

DETAIL

MARKERS – Shall be blue 2–way stimsonite lifelite 88AB or equal.

ADHESIVE – An ample amount of two (A&B) epoxy or equal.

SURFACES – Clean and dry prior to installation per manufacturer's recommendations. Install markers with reflective surfaces facing oncoming vehicles and offset 51mm (2") from lane lines toward fire hydrant.

NOTES

1. Fire Department will provide location(s) for all markers in PRD's, Commercial Lots and other areas outside of Public Right of Way.
2. Markers must be installed at the new and relocated hydrants and within all resurfacing projects.
3. For streets without lane lines or streets with raised pavement markers and no painted lane lines, install markers 152mm (6") from centerline or existing markers.

LEGEND ON PLANS

Marker ■

Fire Hydrant ⋈

Revision	By	Approved	Date
ORIGINAL		H. Hecht	10/82
Add Metric		T. Stanton	03/03
Reviewed		T. Stanton	04/06

SAN DIEGO REGIONAL STANDARD DRAWING

FIRE HYDRANT MARKERS

RECOMMENDED BY THE SAN DIEGO REGIONAL STANDARDS COMMITTEE

T. Stanton 3/10/2003

Chairperson R.C.E. 19246 Date

DRAWING NUMBER **M-19**

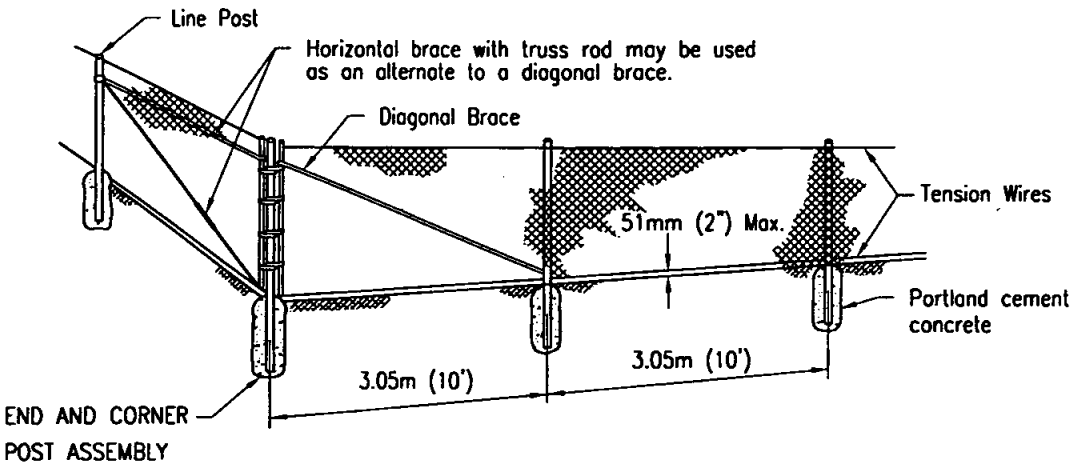

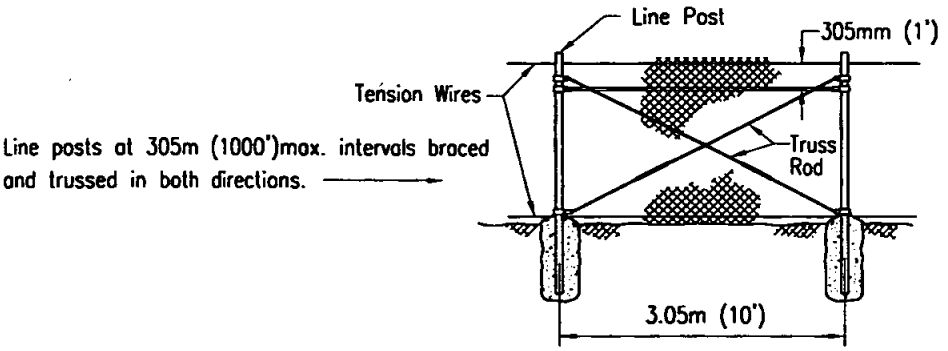

LINE POST BRACING

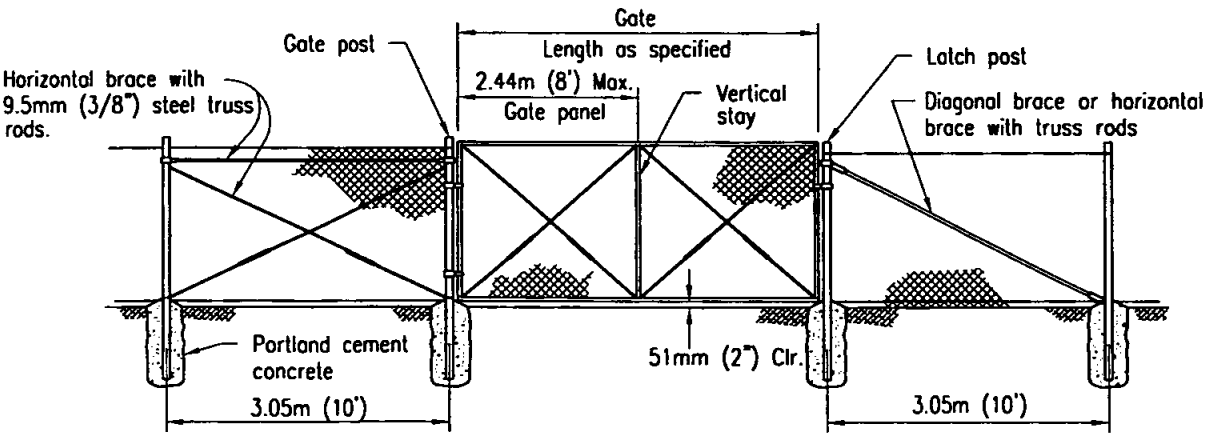

GATE ASSEMBLY

Revision	By	Approved	Date
ORIGINAL		Bahmanian	4/86
Add Metric		T. Stanton	03/03
Reviewed		T. Stanton	04/06

SAN DIEGO REGIONAL STANDARD DRAWING

CHAIN LINK FENCE DETAILS

RECOMMENDED BY THE SAN DIEGO REGIONAL STANDARDS COMMITTEE

T. Stanton 3/10/2003

Chairperson R.C.E. 19246 Date

DRAWING NUMBER **M-20**

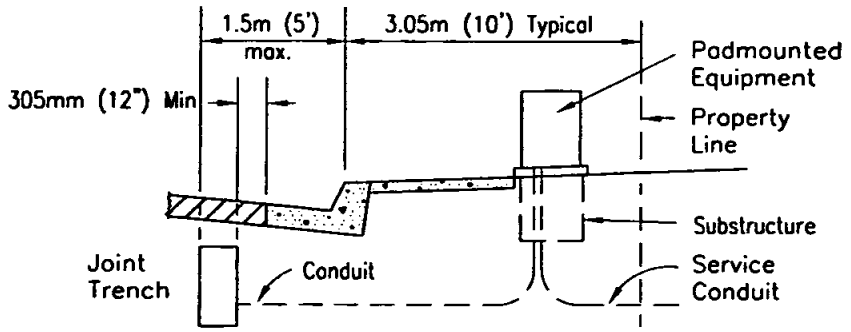

SIDEWALK NEXT TO CURB

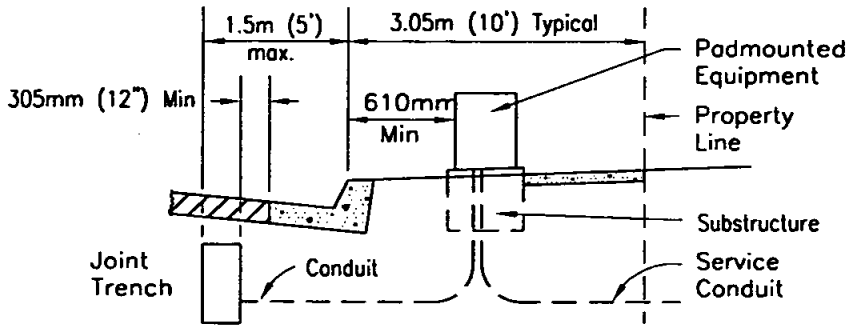

SIDEWALK NEXT TO PROPERTY LINE

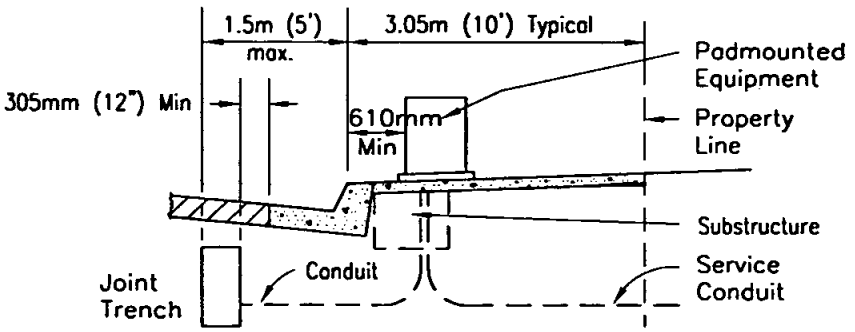

SIDEWALK NEXT TO CURB AND PROPERTY LINE

NOTES

1. Sidewalk shall have a minimum of 1.2m (4') clear area (path, not including curb) passing pedestals, pullboxes and other structures.
2. See Standard Drawing M–15 for joint trench.

Revision	By	Approved	Date
ORIGINAL		Parkinson	9/88
Add Metric		T. Stanton	03/03
Reviewed		T. Stanton	04/06

SAN DIEGO REGIONAL STANDARD DRAWING

UNDERGROUND TYPICAL LOCATION CONVERSION/REPLACEMENT/UPGRADE

RECOMMENDED BY THE SAN DIEGO REGIONAL STANDARDS COMMITTEE

3/10/2003

Chairperson R.C.E. 19246 - Date

DRAWING NUMBER **M-21**

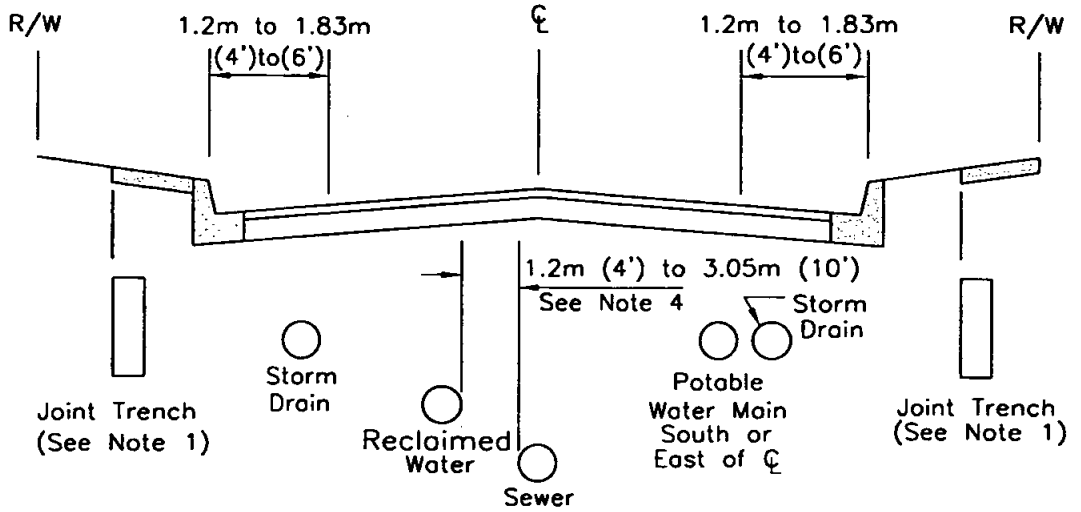

MAJOR STREET

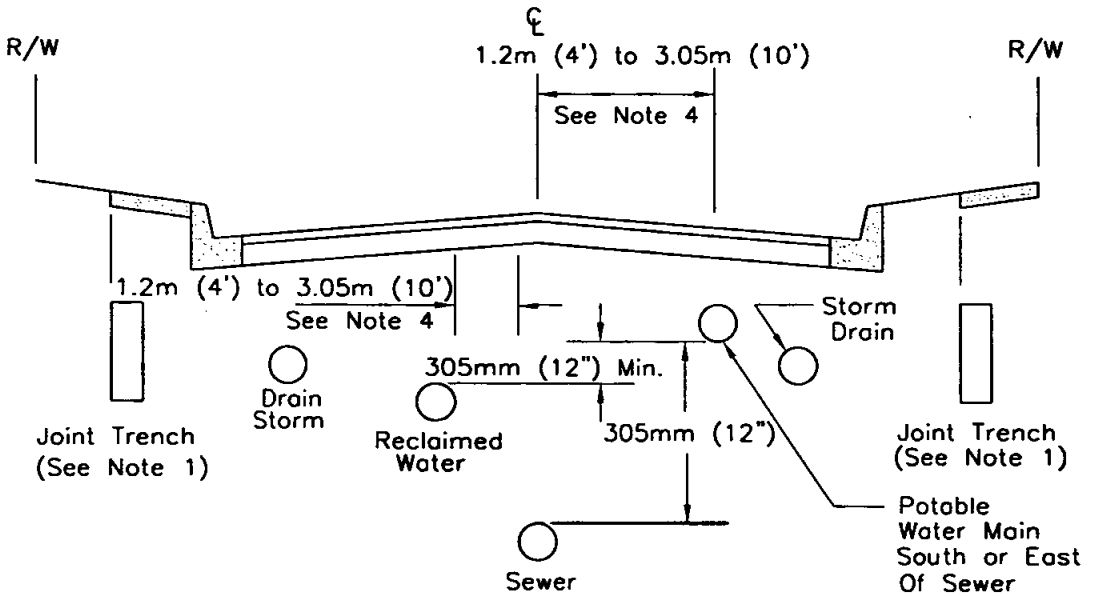

TYPICAL STREET
NEW CONSTRUCTION

NOTES

1. At catch basin locations, joint trench shall be 1.2m (4'). minimum from back of curb to inside wall of trench. See Standard Drawing M-15 for configuration of utilities in joint trench.
2. Sewer and reclaimed water mains shall be designed to cross under potable water mains. The vertical separation between potable water and reclaimed water shall be a minimum of 305mm(12").
3. Sewer and reclaimed water laterals shall cross under potable water main, with a minimum vertical separation of 305mm (12").
4. Sewer and reclaimed water mains shall maintain a 3.05m (10'). minimum horizontal separation, O.D to O.D., with any potable water or sewer/reclaimed main. This separation may be reduced utilizing special construction, with special approval from the Agency and the County Health Dept. For sewer or reclaimed water mains less than 610mm (24") in diameter, only Agency approval is required.

Revision	By	Approved	Date
ORIGINAL		Parkinson	2/95
Add Metric		T. Stanton	03/03
Reviewed		T. Stanton	04/06

SAN DIEGO REGIONAL STANDARD DRAWING

UTILITY LOCATIONS
LOCAL AND MAJOR STREETS

RECOMMENDED BY THE SAN DIEGO REGIONAL STANDARDS COMMITTEE

T. Stanton 3/01/2003

Chairperson R.C.E. 19246 Date

DRAWING NUMBER **M-22**

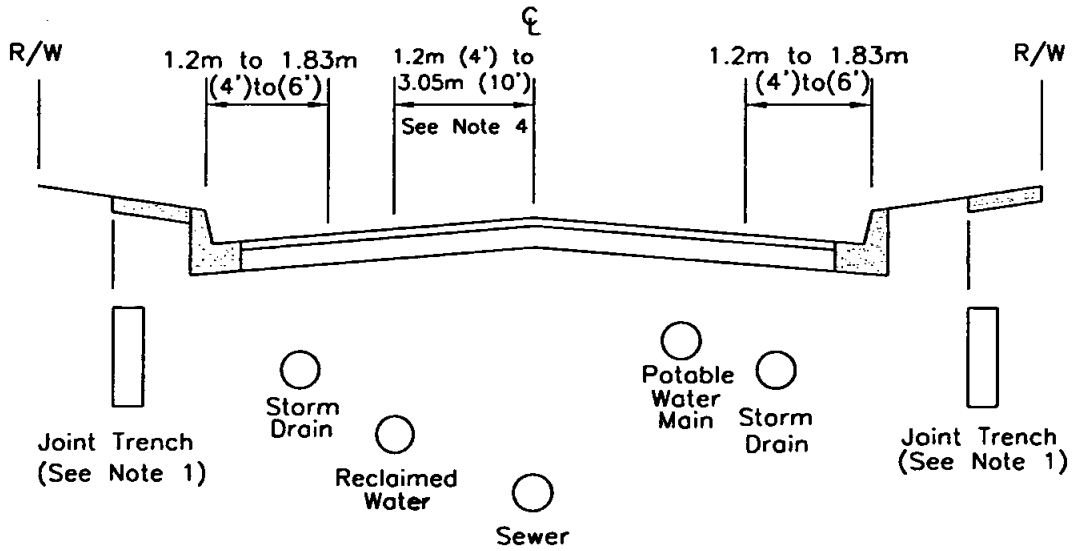

PRIME ARTERIAL

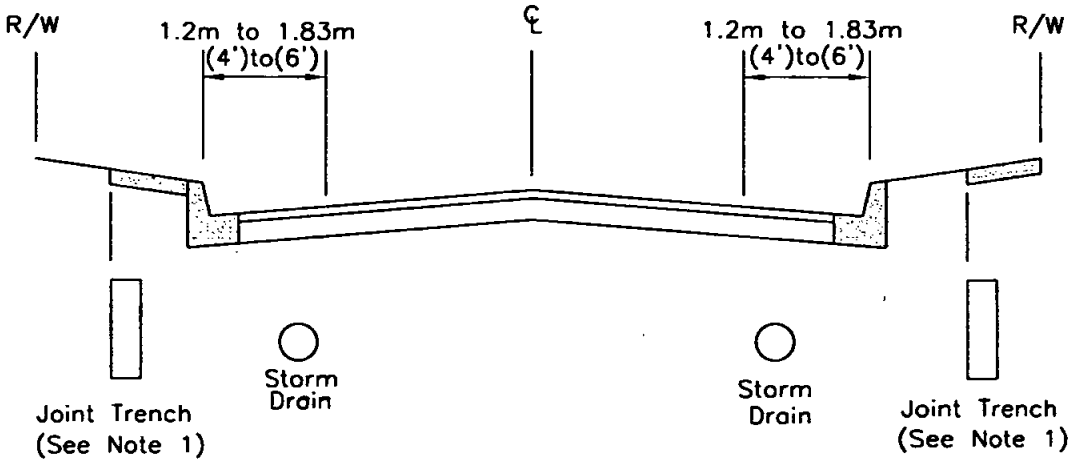

EXPRESSWAY

NOTES

1. At catch basin locations, joint trench shall be 1.2m (4'). minimum from back of curb to inside wall of trench. See Standard Drawing M-15 for configuration of utilities in joint trench.
2. Sewer and reclaimed water mains shall be designed to cross under potable water mains. The vertical separation between potable water and reclaimed water shall be a minimum of 305mm(12").
3. Sewer and reclaimed water laterals shall cross under potable water main, with a minimum vertical separation of 305mm (12").
4. Sewer and reclaimed water mains shall maintain a 3.05m (10'). minimum horizontal separation, O.D to O.D., with any potable water or sewer/reclaimed main. This separation may be reduced utilizing special construction, with special approval from the Agency and the County Health Dept. For sewer or reclaimed water mains less than 610mm (24") in diameter, only Agency approval is required.

Revision	By	Approved	Date
ORIGINAL		G.Parkinson	2/95
Add Metric		T. Stanton	03/03
Reviewed		T. Stanton	04/06

SAN DIEGO REGIONAL STANDARD DRAWING

UTILITY LOCATIONS
PRIME ARTERIALS AND EXPRESSWAYS

RECOMMENDED BY THE SAN DIEGO REGIONAL STANDARDS COMMITTEE

T. Stanton 3/01/2003

Chairperson R.C.E. 19246 Date

DRAWING NUMBER **M-23**

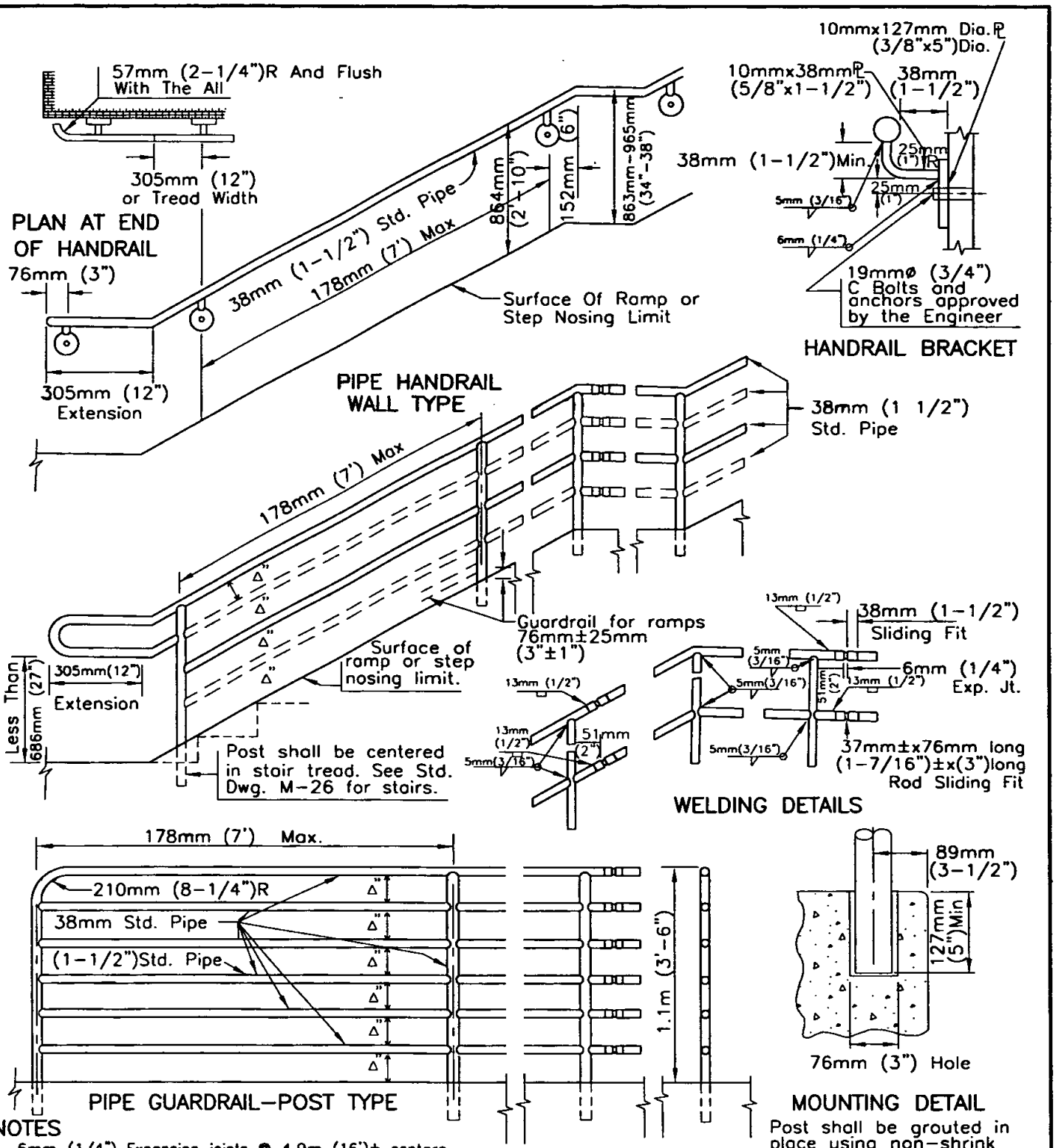

NOTES

1. 6mm (1/4") Expansion joints @ 4.9m (16')± centers.
2. Weld and grind smooth all connections.
3. All railing to be hot dip galvanized after fabrication.
4. Pipe shall seamless steel ASTM A53 Grade B.
5. Maximum =Δ102mm(4"). Guardrails and handrails for stairs and ramps more than 762mm(30") above have intermediate rails equally spaced such that a sphere 102mm(4") in diameter cannot pass through.
6. Handrail extension for stairs, at all bottom risers, shall be 305mm(12") plus one tread width.

Revision	By	Approved	Date
ORIGINAL		G.Parkinson	2/95
Add Metric		T. Stanton	03/03
Reviewed		T. Stanton	04/06

SAN DIEGO REGIONAL STANDARD DRAWING

PEDESTRIAN PROTECTIVE RAILING DETAILS No. 1

RECOMMENDED BY THE SAN DIEGO REGIONAL STANDARDS COMMITTEE

T. Stanton 3/10/2003

Chairperson R.C.E. 19246 Date

DRAWING NUMBER **M-24**

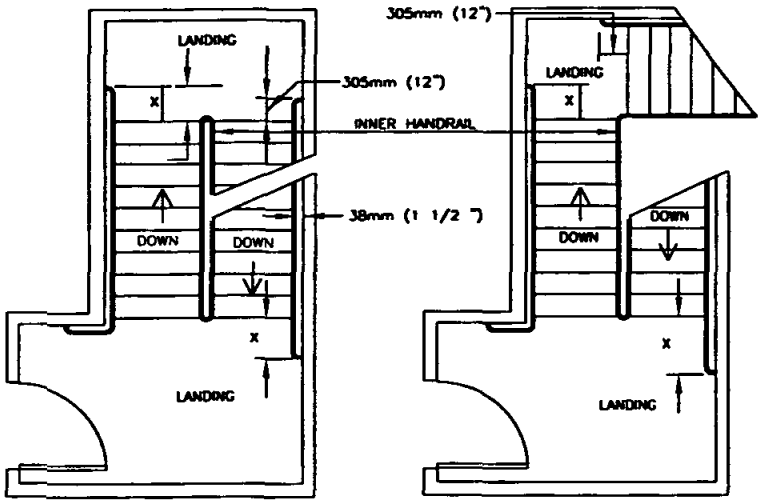

X IS THE MINIMUM HANDRAIL EXTENSION OF 12 INCHES PLUS THE WIDTH OF ONE TREAD AT EACH BOTTOM RISER.

NOTE: INNER HANDRAIL AT LANDINGS OF STAIRS THAT DOUBLE BACK OR IMMEDIATELY TURN SHALL BE CONTINUOUS, AND SHALL NOT EXTEND ONTO LANDING OR PATH OF TRAVEL.

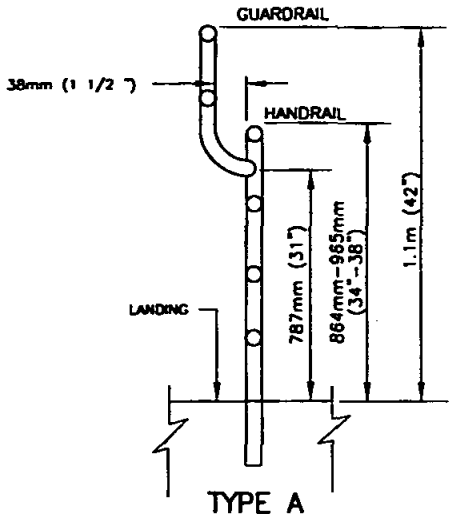

TYPE A
GUARDRAIL EXTENSION

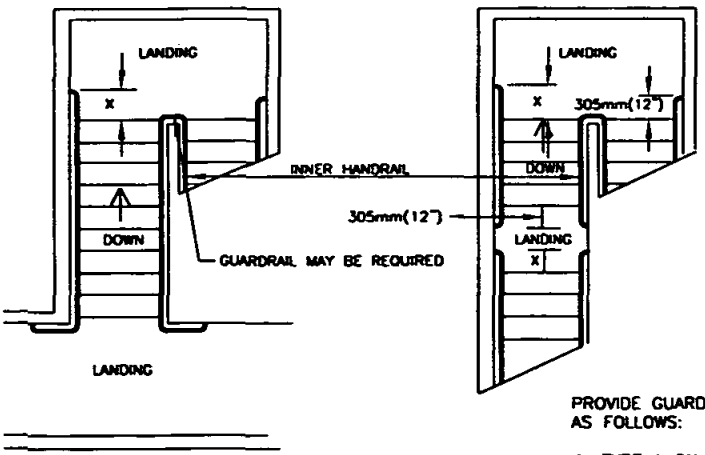

STAIR HANDRAILS

PROVIDE GUARDRAIL EXTENSIONS AS FOLLOWS:

1. TYPE A ON OPEN SIDE OF ALL LANDINGS MORE THAN 762mm(30") ABOVE GRADE OR FLOOR BELOW.
2. TYPE B ON OPEN SIDE OF STAIRS (INCLUDING LANDINGS) WHEN SPECIFIED.

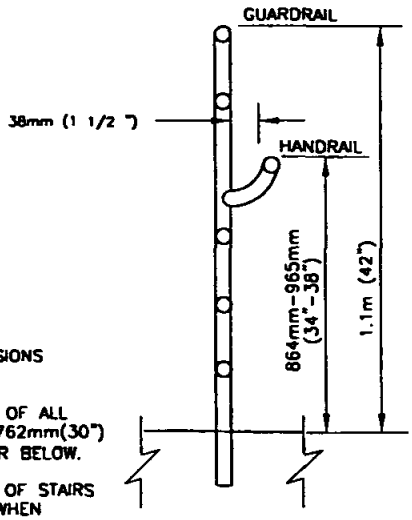

TYPE B
GUARDRAIL EXTENSION

NOTES

1. Post type guardrails, and handrails for stairs or landings 762mm(30") or less above grade or floor below shall have only one intermediate rail centered between the step nosing limit (or if specified the top of curb) and top of railing.
2. Post type guardrails, and handrails for stairs or landings more than 762mm(30") above grade or floor below shall have intermediate rails equally spaced such that a sphere 102mm(4") in diameter cannot pass through.
3. Where handrail extensions interfere with transverse walkways the horizontal portions shall not encroach but be turned away from stairs and parallel to walkway.
4. The top of guardrails for stairways, exclusive of their landings, may have a height as specified for handrails.

Revision	By	Approved	Date
ORIGINAL		G.Parkinson	2/95
Add Metric		T. Stanton	03/03
Reviewed		T. Stanton	04/06

SAN DIEGO REGIONAL STANDARD DRAWING

PEDESTRIAN PROTECTIVE RAILING DETAILS No. 2

RECOMMENDED BY THE SAN DIEGO REGIONAL STANDARDS COMMITTEE

T. Stanton 3/01/2003

Chairperson R.C.E. 19246 Date

DRAWING NUMBER M-25

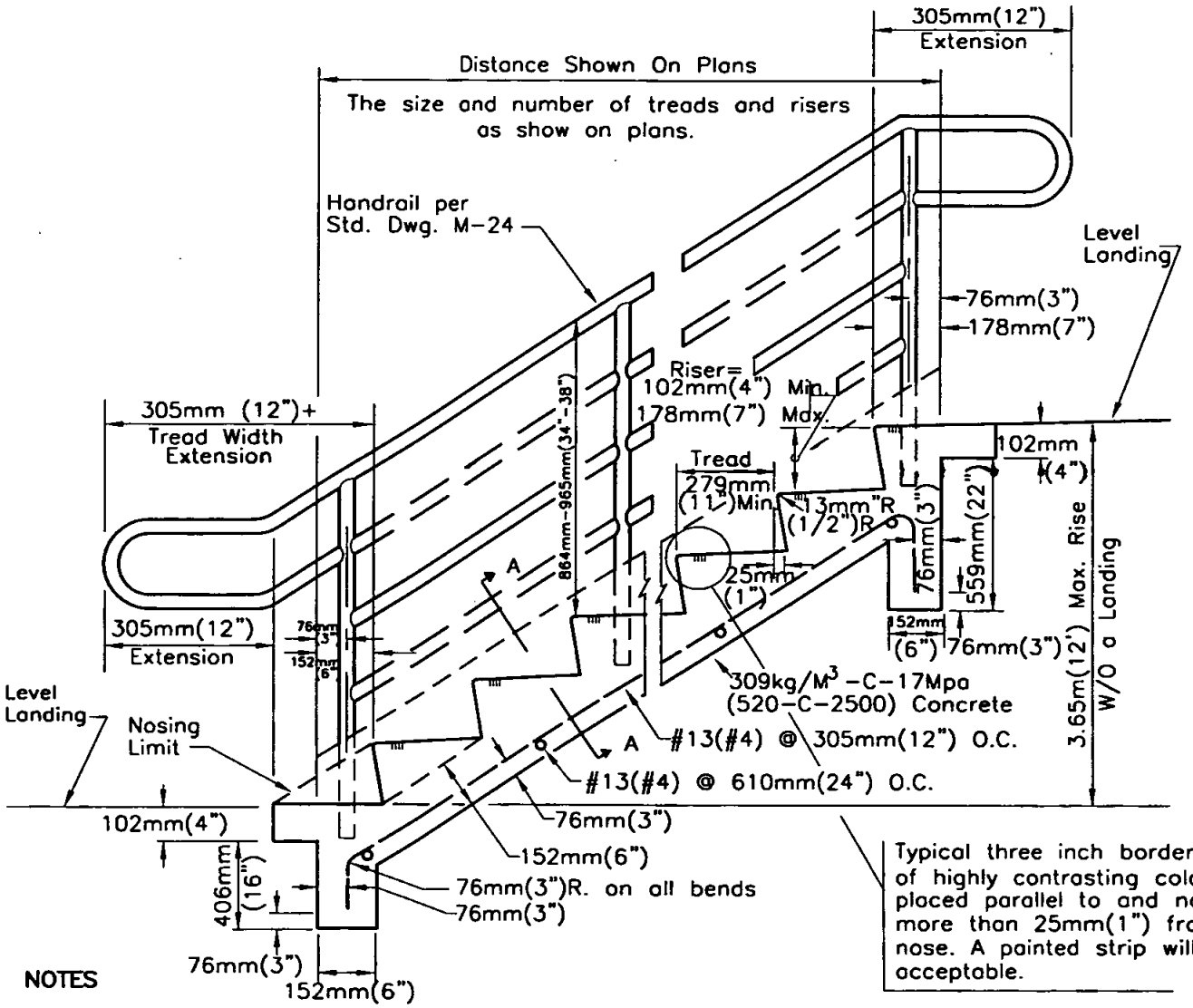

NOTES

1. Broom finish on treads, trowel finish on all other exposed surfaces.
2. 6mm(1/4") per 305mm(1') slope on treads for drainage.
3. Locate handrails on both sides.
4. Handrail may project into the required width a distance of 89mm(3-1/2") from each side of stairway.

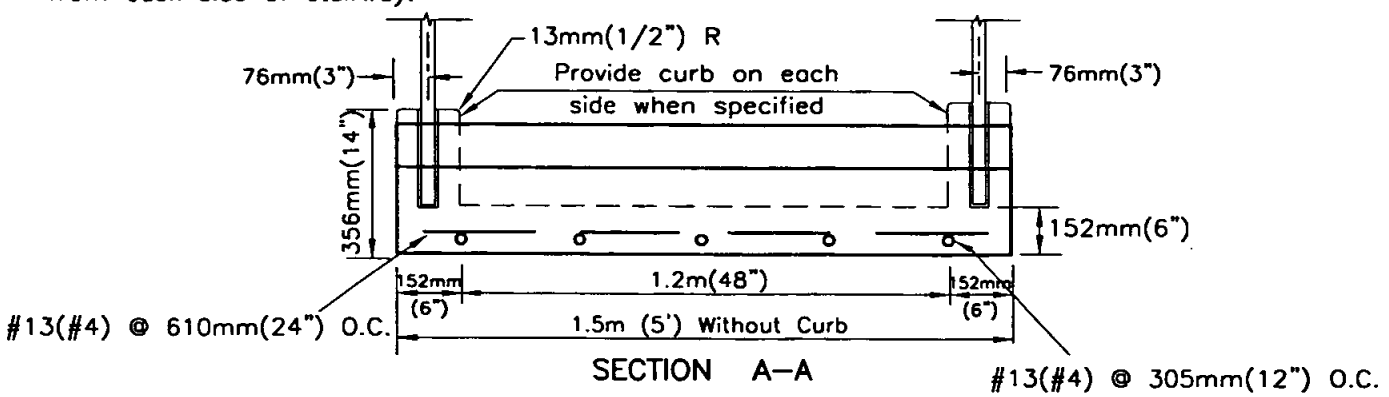

SECTION A-A

Revision	By	Approved	Date
ORIGINAL		G.Parkinson	2/95
Add Metric		T. Stanton	03/03
Reviewed		T. Stanton	04/06

SAN DIEGO REGIONAL STANDARD DRAWING

CONCRETE STEPS

RECOMMENDED BY THE SAN DIEGO REGIONAL STANDARDS COMMITTEE

T. Stanton 3/01/2003

Chairperson R.C.E. 19246 Date

DRAWING NUMBER **M-26**

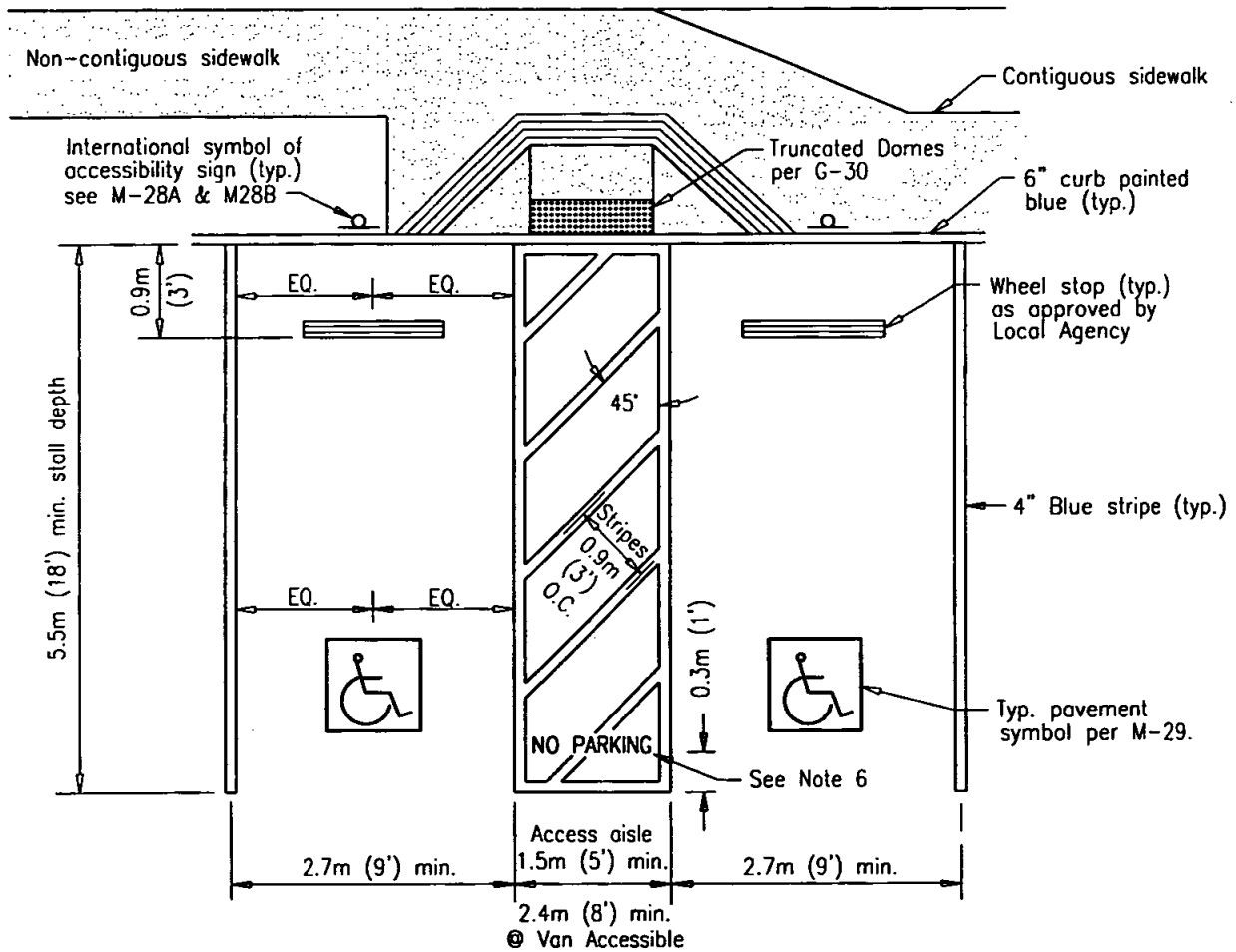

NOTES:

1. Provide for adequate drainage.
2. For appropriate ramp alternate to conform to topographical conditions, see standard drawings G-27 through G-30.
3. Blue color should match color No. 15090 in the Federal Standard 595a as specified in Section 522(b)2.
4. If only one accessible parking stall is going to be provided, the access aisle shall be 2.4m (8') (van accessible) and located on the passenger side.
5. Sidewalk cross slope shall not exceed 2.0%.
6. "NO PARKING" 12" high stencil marking, reflective white over blue stripes.

Revision	By	Approved	Date
ORIGINAL		Parkinson	02/95
Add Metric		T.Stanton	03/03
Update		D.Davis	04/06

SAN DIEGO REGIONAL STANDARD DRAWING

DISABLED PARKING STALL(S)

RECOMMENDED BY THE SAN DIEGO REGIONAL STANDARDS COMMITTEE

T.Stanton 04/27/2006

Chairperson R.C.E. 19246 Date

DRAWING NUMBER **M-27A**

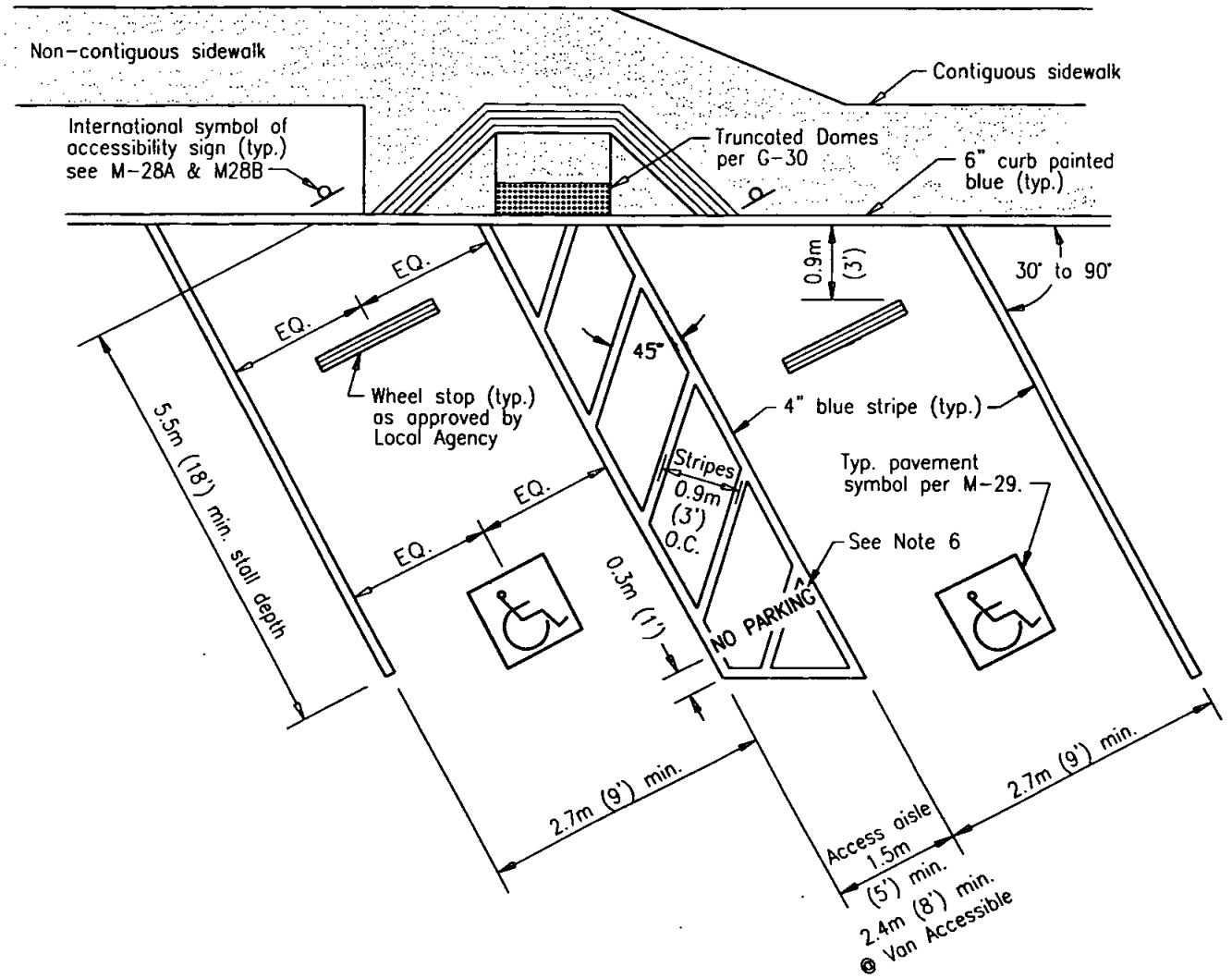

NOTES:

1. Provide for adequate drainage.
2. For appropriate ramp alternate to conform to topographical conditions, see standard drawings G-27 through G-30.
3. Blue color should match color No. 15090 in the Federal Standard 595a as specified in Section 522(b)2.
4. If only one accessible parking stall is going to be provided, the access aisle shall be 2.4m (8') (van accessible) and located on the passenger side.
5. Sidewalk cross slope shall not exceed 2.0%.
6. "NO PARKING" 12" high stencil marking, reflective white over blue stripes.

Revision	By	Approved	Date
ORIGINAL		G.Parkinson	02/95
Add Metric		T.Stanton	03/03
Update		D.Davis	04/06

SAN DIEGO REGIONAL STANDARD DRAWING

DIAGONAL DISABLED PARKING STALL(S)

RECOMMENDED BY THE SAN DIEGO REGIONAL STANDARDS COMMITTEE

04/27/2006

Chairperson R.C.E. 19246 Date

DRAWING NUMBER **M-27B**

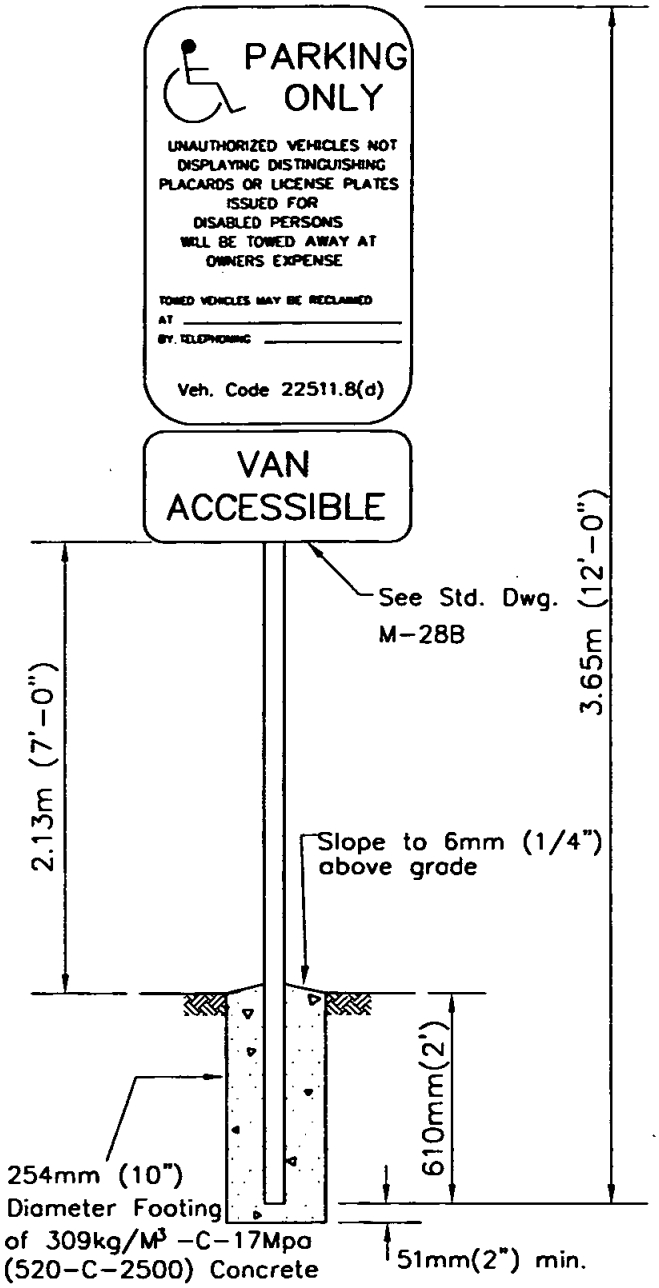

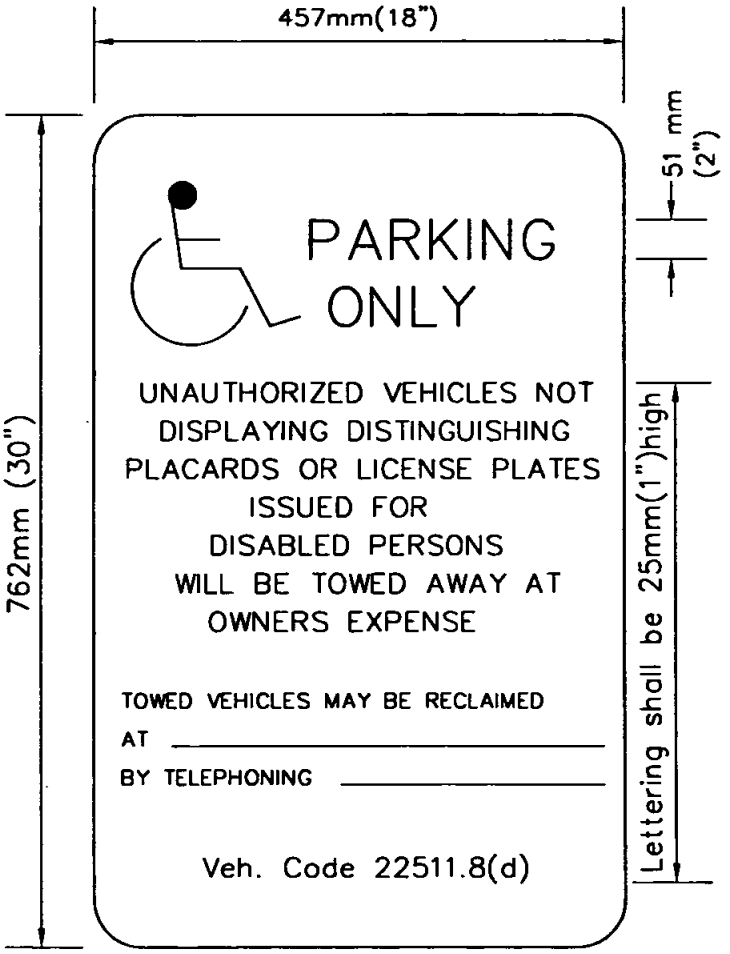

SIGN DETAIL

NOTES:

1. Sign shall be constructed of a minimum 1.57mm (0.062") thick aluminum.
2. Lettering, symbol and border shall be reflectorized white, on a blue background.
3. Lettering shall be 25mm (1") and 51mm (2") high.
4. Where space is designed for van accessibility, a sign "VAN ACCESSIBLE" shall be installed.
5. Minimum van accessible vertical clearance is 2.5m (8'-2").

Revision	By	Approved	Date
ORIGINAL		G.Parkinson	2/95
Add Metric		T. Stanton	03/03
Reviewed		T. Stanton	04/06

SAN DIEGO REGIONAL STANDARD DRAWING

DISABLED PARKING SIGN

RECOMMENDED BY THE SAN DIEGO REGIONAL STANDARDS COMMITTEE

T. Stanton 3/01/2003

Chairperson R.C.E. 19246 Date

DRAWING NUMBER **M-28A**

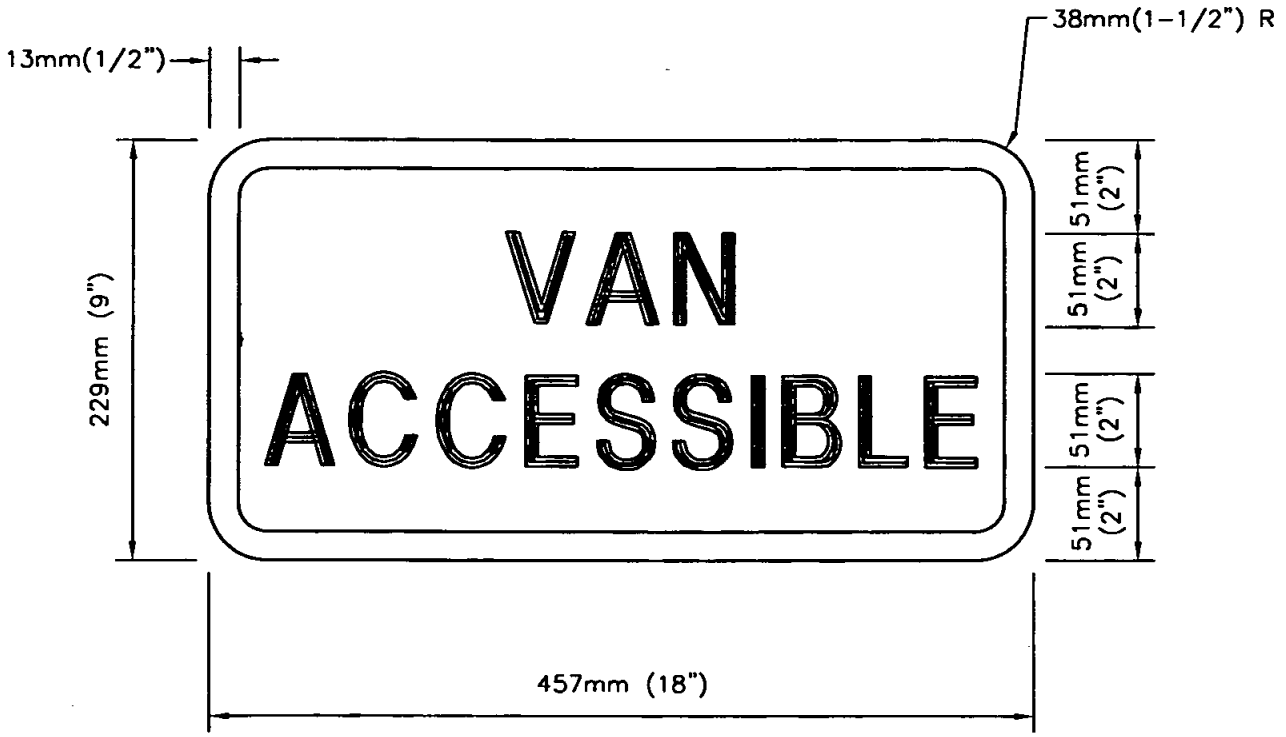

NOTES

1. Sign shall be constructed of aluminum, 1.57mm (0.062") minimum thickness.
2. Colors: Background–Reflectorized Blue
   Border and letters– Reflectorized White
   Blue color shall match color No. 15090 in the Federal Standard 595a as specified in Section 522(b)2.

Revision	By	Approved	Date
ORIGINAL		G.Parkinson	2/95
Add Metric		T. Stanton	03/03
Reviewed		T. Stanton	04/06

SAN DIEGO REGIONAL STANDARD DRAWING

VAN ACCESSIBLE SIGN FOR DISABLED PARKING SPACE

RECOMMENDED BY THE SAN DIEGO REGIONAL STANDARDS COMMITTEE

T. Stanton 3/01/2003

Chairperson R.C.E. 19246 Date

DRAWING NUMBER **M-28B**

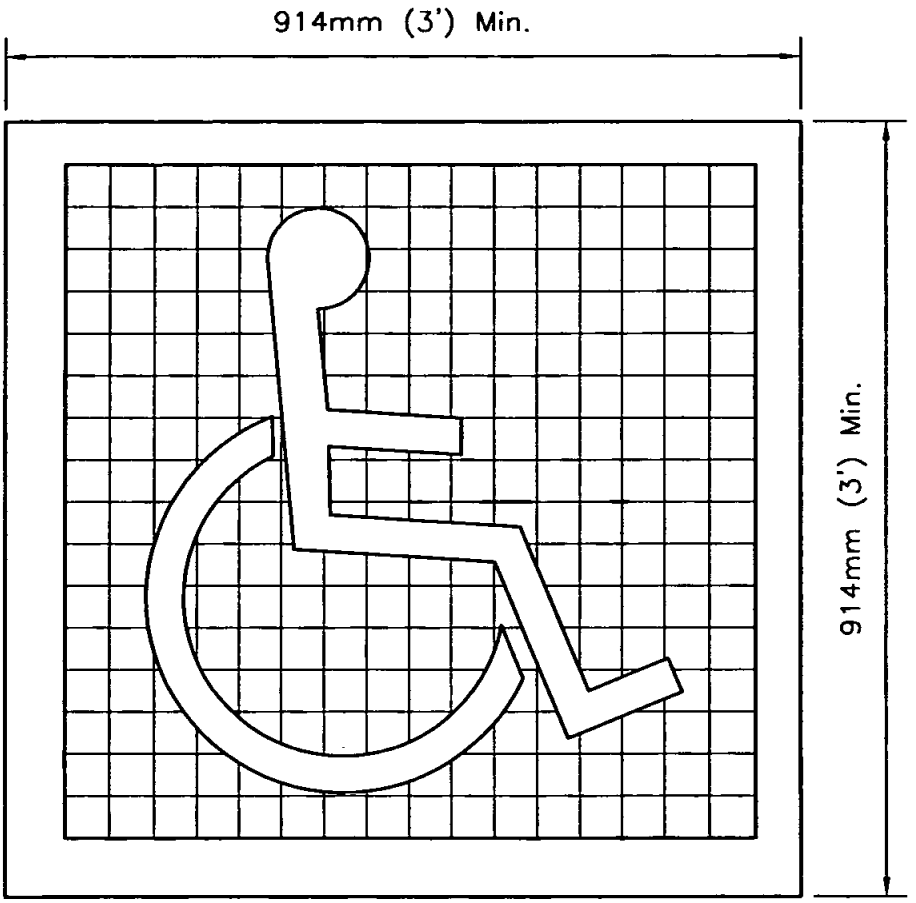

(a) SYMBOL PROPORTIONS

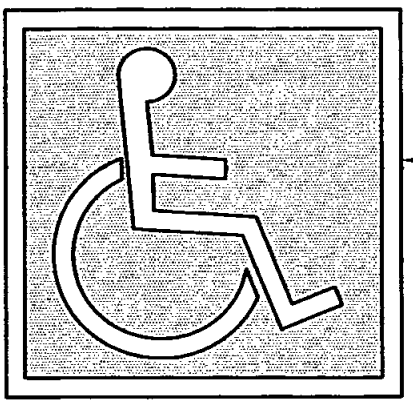

INTERNATIONAL SYMBOL OF ACCESSIBILITY

(b) DISPLAY CONDITIONS

NOTES

1. Pavement symbol shall be painted white on a blue background.
2. Blue color shall match color No. 15090 in the Federal Standard 595a as specified in Section 522(b)2.

Revision	By	Approved	Date
ORIGINAL		G.Parkinson	2/95
Add Metric		T. Stanton	03/03
Reviewed		T. Stanton	04/06

SAN DIEGO REGIONAL STANDARD DRAWING

PAVEMENT SYMBOL - DISABLED PARKING

RECOMMENDED BY THE SAN DIEGO REGIONAL STANDARDS COMMITTEE

T. Stanton 3/10/2003

Chairperson R.C.E. 19246 Date

DRAWING NUMBER M-29

FOR GUARDRAIL STANDARDS USE:
Caltrans "Standard Plans for Construction of Local Streets and Roads"

Revision	By	Approved	Date
ORIGINAL		G.Parkinson	5/92
Add Metric		T. Stanton	03/03
Remove GD Std. Dwgs.		T. Stanton	04/06

SAN DIEGO REGIONAL STANDARD DRAWING

GUARD RAIL REFERENCE NOTE

RECOMMENDED BY THE SAN DIEGO REGIONAL STANDARDS COMMITTEE

T. Stanton 04/27/2006

Chairperson R.C.E. 19246 Date

DRAWING NUMBER **M-30**

NOTES

1. Structural steel tubing used for post & sleeves shall be galvanized 12 gauge cold rolled steel, of the nominal dimensions shown hereon and meet the requirements of ASTM A446 Grade A.
2. Galvanizing shall be per ASTM A525. Posts & sleeves shall have 11mm(7/16") dia. holes spaced 25mm(1") o.c. ±3mm(1/8") & shall have no more variation in straightness than 1.6mm(1/16") in 914mm(3'). Posts shall be square within ±.36mm(0.014"), have twist no greater than 0.062" in 3' and have corner radii of 4mm(5/32") ±.4mm(1/64").
3. The signs shall be mounted on posts in accordance with Section 56, "Signs" of the State Standard Specifications. All fastening hardware is to be provided by the Contractor.
4. Maximum sign size 5.2 sq. ft.

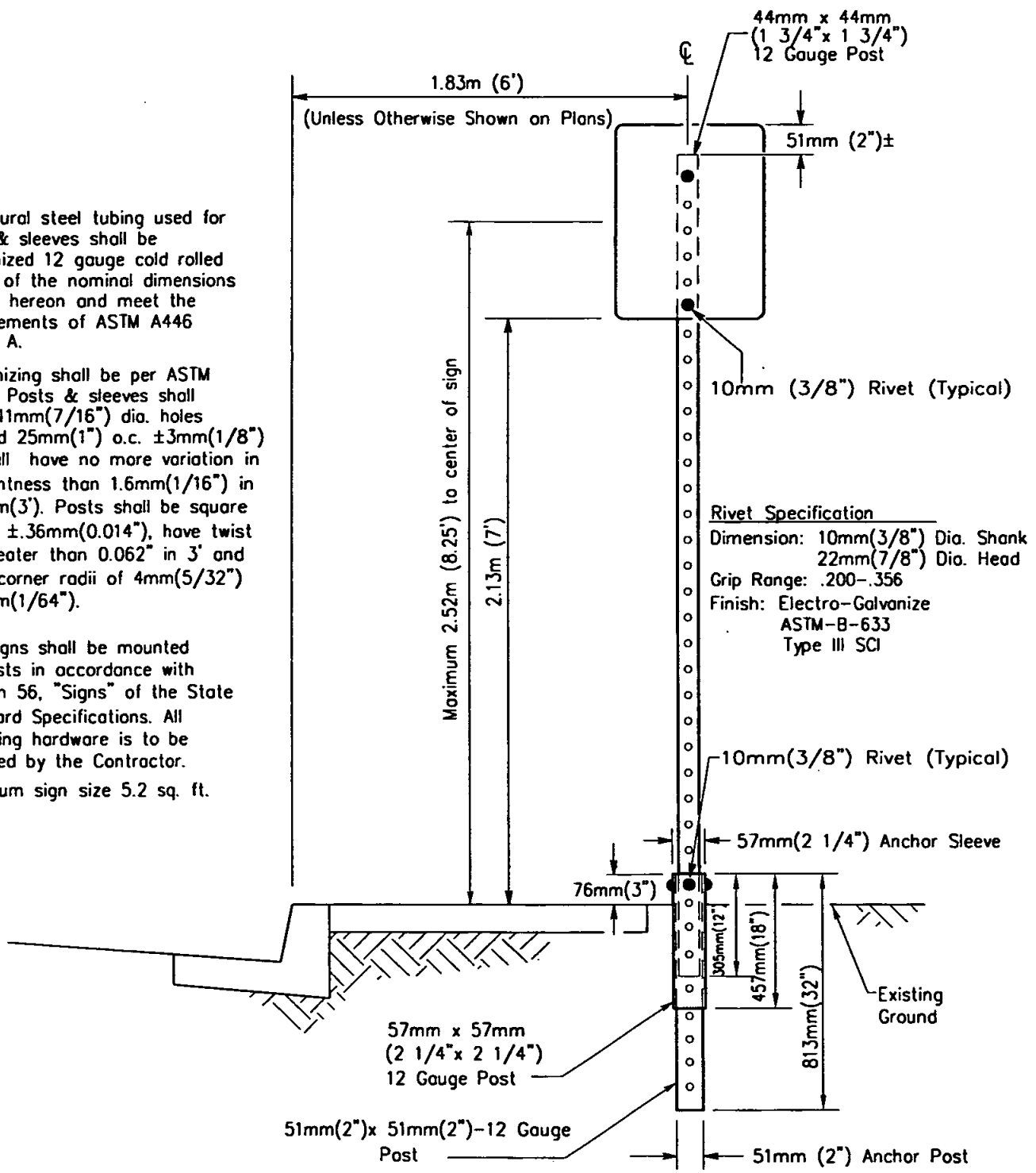

Revision	By	Approved	Date
ORIGINAL		G.Parkinson	2/95
Add Metric		T. Stanton	03/03
Reviewed		T. Stanton	04/06

SAN DIEGO REGIONAL STANDARD DRAWING

BREAK-AWAY SIGN POST

RECOMMENDED BY THE SAN DIEGO REGIONAL STANDARDS COMMITTEE

T. Stanton 3/01/2003

Chairperson R.C.E. 19246 Date

DRAWING NUMBER **M-45**

SEWERAGE SYSTEMS

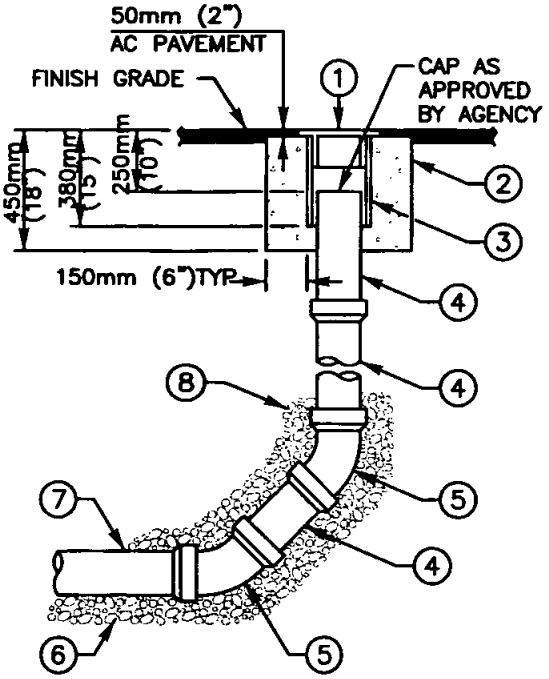

TYPE A
MAINS FOR 150mm (6") AND 200mm (8")

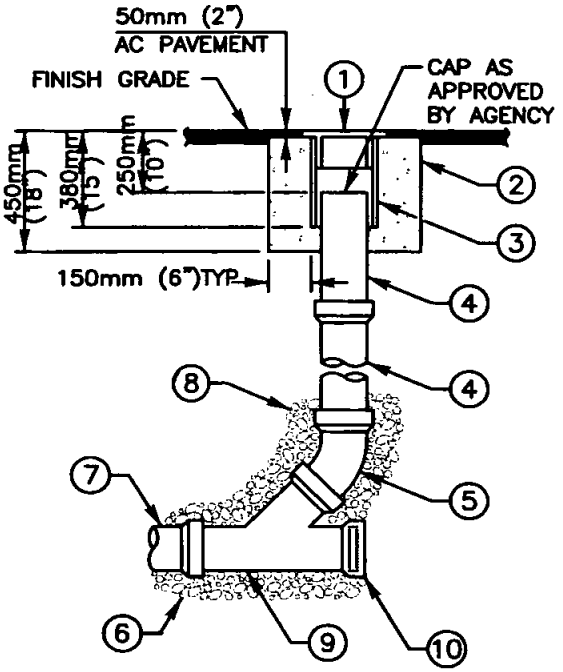

TYPE B
SEWER LATERAL CLEANOUT

NOTES:
1) REFER TO AGENCY SPECIFICATIONS WHERE APPLICABLE
2) CLEANOUTS TO BE INSTALLED AT THE END OF MAINS WHERE INDICATED ON THE PLANS
3) CLEANOUT PIPE TO BE SAME SIZE AND MATERIAL AS SEWER MAIN UP TO 200mm (8")
4) BACKFILL TO TOP OF 45° BEND WITH 19mm (3/4") CRUSHED ROCK
5) MATERIALS SHALL BE SELECTED FROM THE AGENCY'S APPROVED MATERIALS LIST

LEGEND ON PLANS

ITEM NO	SIZE AND DESCRIPTION	ITEM NO	SIZE AND DESCRIPTION
1	300mm (12") CI CLEANOUT BOX COVER MARKED 'SEWER' AND AGENCY NAME AS REQUIRED	5	45° ELBOW
2	CONCRETE RING	6	19mm (3/4") CRUSHED ROCK PIPE BEDDING
3	300mm (12") PVC, C-900 x 380mm (15") LONG (CLEANOUT BOX)	7	SEWER MAIN
4	SIZE x REQUIRED LENGTH PVC PIPE	8	19mm (3/4") CRUSHED ROCK SEE NOTE 4
		9	STANDARD WYE BRANCH
		10	INSTALL PLUG AND CONCRETE LUG

Revision	By	Approved	Date
ORIGINAL		Kercheval	12/75
Add Metric		T. Stanton	03/03
Replaced S-03		J. Tomasulo	03/05

SAN DIEGO REGIONAL STANDARD DRAWING

SEWER CLEANOUT

RECOMMENDED BY THE SAN DIEGO REGIONAL STANDARDS COMMITTEE

T. Stanton 03/24/2005

Chairperson R.C.E. 19246 Date

DRAWING NUMBER SC-01

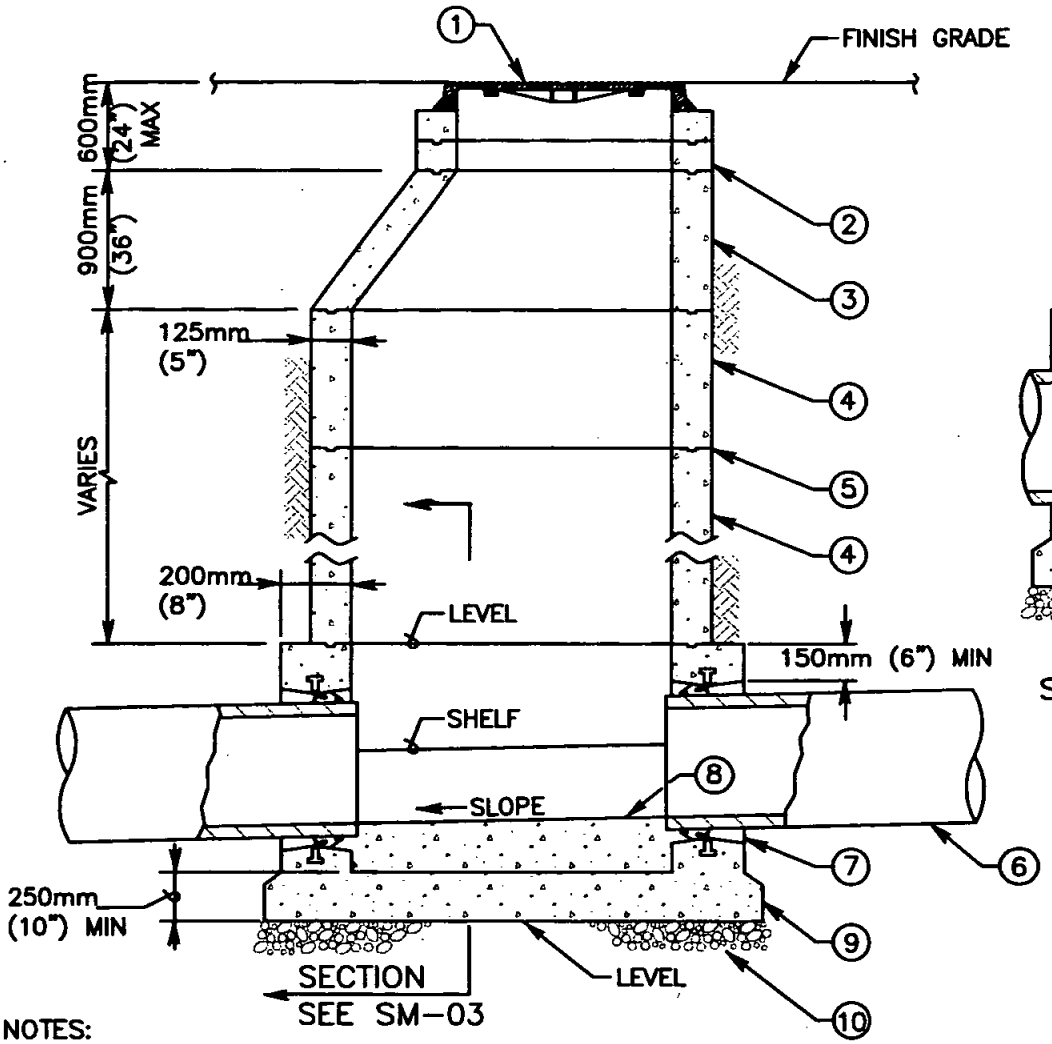

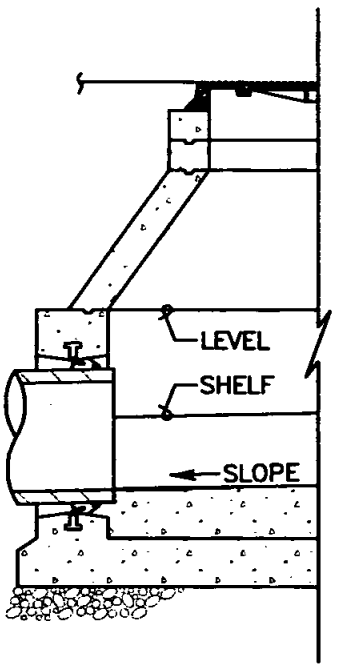

SHALLOW MANHOLE SECTION

NOTES:
1) REFER TO AGENCY SPECIFICATIONS WHERE APPLICABLE
2) VERTICAL WALL OF CONE TO BE ON THE UPSTREAM SIDE OF MANHOLE SEE SM-05 FOR ACCESS LOCATIONS
3) FOR MANHOLE BASES SEE SM-03
4) MANHOLES FOR MAINS 450mm (18") AND LARGER SHALL BE COATED AND LINED PER SM-07
5) MATERIALS SHALL BE SELECTED FROM THE AGENCY'S APPROVED MATERIALS LIST

1200mm (48")

LEGEND ON PLANS

ITEM NO	SIZE AND DESCRIPTION	ITEM NO	SIZE AND DESCRIPTION
1	900mm (36") MANHOLE FRAME AND TWO CONCENTRIC COVERS SEE S.D.R.S.D. M-3	5	WATER TIGHT JOINTS SEE SM-05
2	900mm (36") DIA GRADE RING(S) 150mm (6") TO 450mm (18") HIGH	6	SEWER MAIN
3	ECCENTRIC CONE SEE NOTE 2	7	MANHOLE PIPE CONNECTOR SEE SM-04
4	1200mm (48") DIA RING(S) VARIABLE HEIGHT	8	FIELD INSTALLED INVERT SEE SM-04
		9	CONCRETE BASE, PRECAST OR CAST IN PLACE
		10	150mm (6") OF 19mm (3/4") CRUSHED ROCK

Revision	By	Approved	Date
ORIGINAL		Kercheval	12/75
Add Metric		T. Stanton	03/03
Replaced S-02		J. Tomasulo	03/05

SAN DIEGO REGIONAL STANDARD DRAWING

1200mm (48") DIAMETER PRECAST MANHOLE INSTALLATION

RECOMMENDED BY THE SAN DIEGO REGIONAL STANDARDS COMMITTEE

03/24/2005

Chairperson R.C.E. 19246 Date

DRAWING NUMBER SM-01

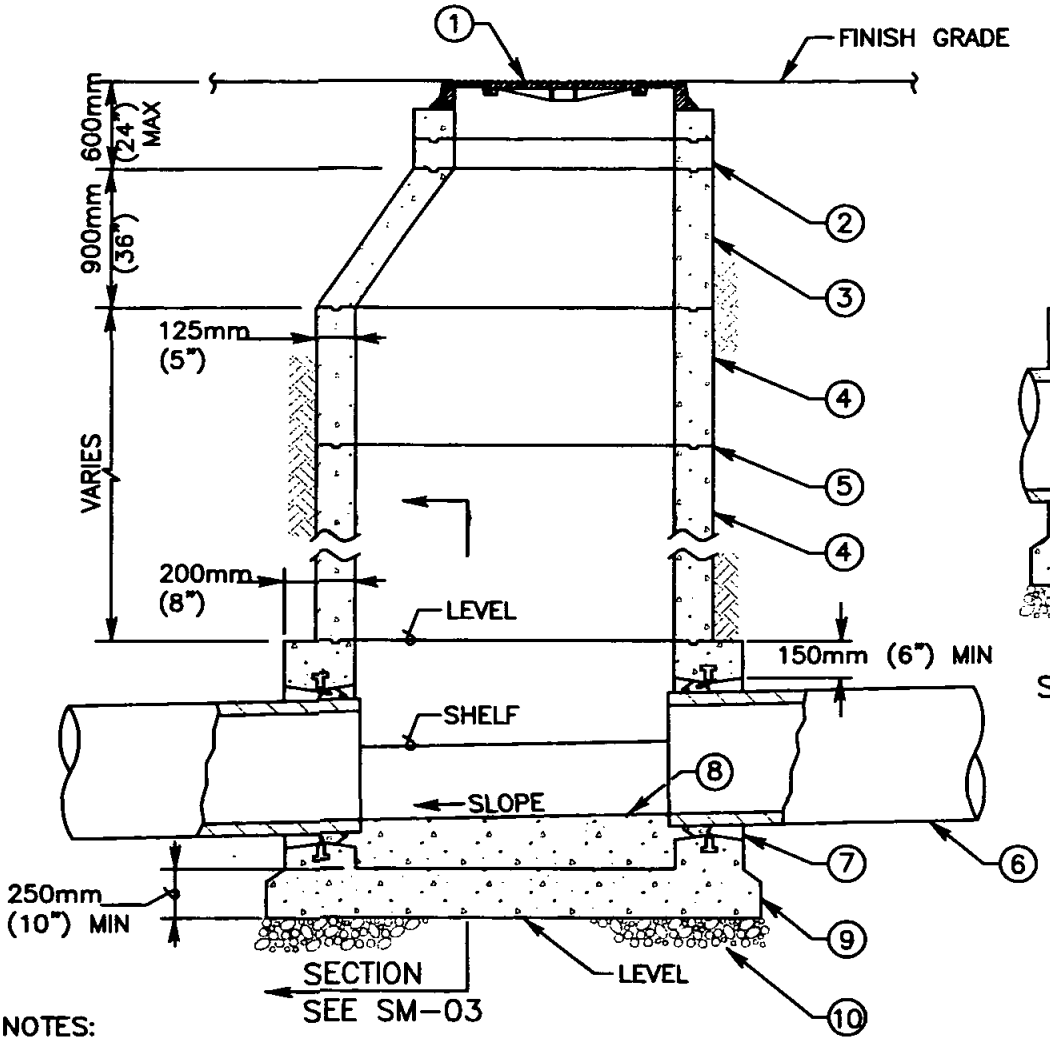

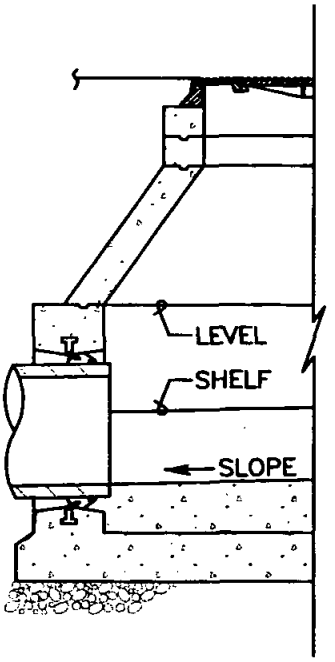

SHALLOW MANHOLE SECTION

NOTES:
1) REFER TO AGENCY SPECIFICATIONS WHERE APPLICABLE
2) VERTICAL WALL OF CONE TO BE ON THE UPSTREAM SIDE OF MANHOLE SEE SM-05 FOR ACCESS LOCATIONS
3) FOR MANHOLE BASES SEE SM-03
4) MANHOLES FOR MAINS 450mm (18") AND LARGER SHALL BE COATED AND LINED PER SM-07
5) MATERIALS SHALL BE SELECTED FROM THE AGENCY'S APPROVED MATERIALS LIST

1500mm (60")

LEGEND ON PLANS

ITEM NO	SIZE AND DESCRIPTION	ITEM NO	SIZE AND DESCRIPTION
1	900mm (36") MANHOLE FRAME AND TWO CONCENTRIC COVERS SEE S.D.R.S.D. M-3	5	WATER TIGHT JOINTS SEE SM-05
2	900mm (36") DIA GRADE RING(S) 150mm (6") TO 450mm (18") HIGH	6	SEWER MAIN
3	ECCENTRIC CONE SEE NOTE 2	7	MANHOLE PIPE CONNECTOR SEE SM-04
4	1500mm (60") DIA RING(S) VARIABLE HEIGHT	8	FIELD INSTALLED INVERT SEE SM-04
		9	CONCRETE BASE, PRECAST OR CAST IN PLACE
		10	150mm (6") OF 19mm (3/4") CRUSHED ROCK

Revision	By	Approved	Date
ORIGINAL		Kercheval	12/75
Add Metric		T. Stanton	03/03
Replaced S-02		J. Tomasulo	03/05

SAN DIEGO REGIONAL STANDARD DRAWING

1500mm (60") DIAMETER PRECAST MANHOLE INSTALLATION

RECOMMENDED BY THE SAN DIEGO REGIONAL STANDARDS COMMITTEE

03/24/2005

Chairperson R.C.E. 19246 Date

DRAWING NUMBER SM-02

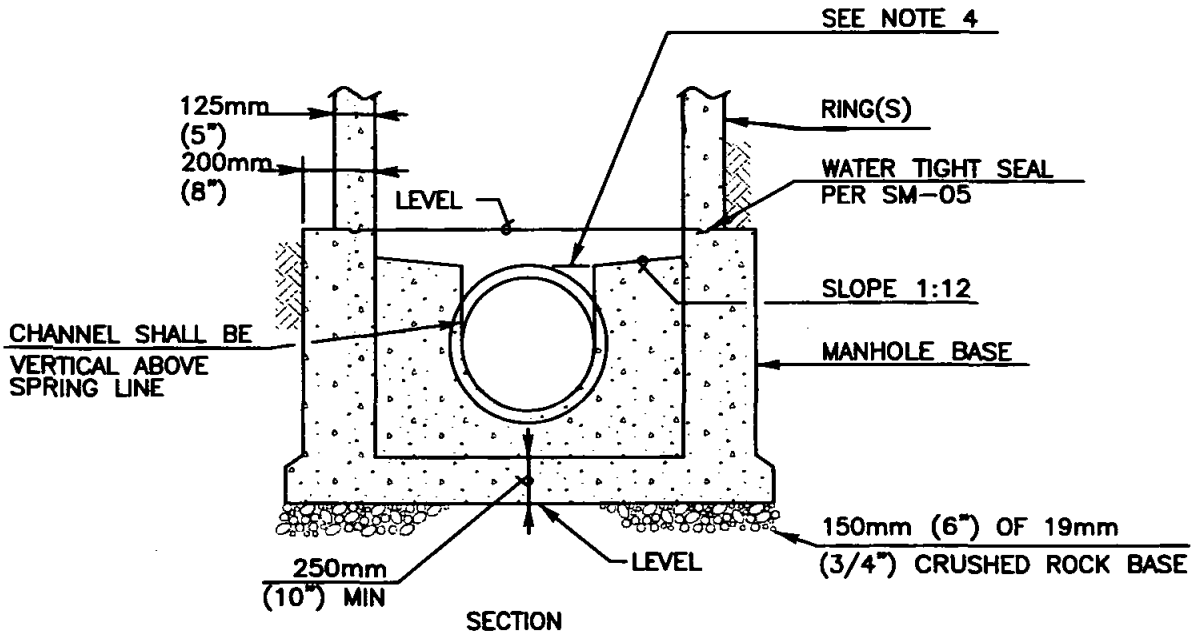

NOTES:
1) REFER TO AGENCY SPECIFICATIONS WHERE APPLICABLE
2) FOR MANHOLE INSTALLATIONS SEE SM-01 AND SM-02
3) MANHOLE BASES FOR MAINS 450mm (18") AND LARGER SHALL BE COATED PER SM-07
4) LOWEST POINT ON SHELF SHALL BE EVEN WITH TOP OF PIPE
5) MATERIALS SHALL BE SELECTED FROM THE AGENCY'S APPROVED MATERIALS LIST

Revision	By	Approved	Date
ORIGINAL		Kercheval	12/75
Add Metric		T. Stanton	03/03
Replaced S-02		J. Tomasulo	03/05

SAN DIEGO REGIONAL STANDARD DRAWING

SEWER MANHOLE BASE

RECOMMENDED BY THE SAN DIEGO REGIONAL STANDARDS COMMITTEE

03/24/2005

Chairperson R.C.E. 19246 Date

DRAWING NUMBER SM-03

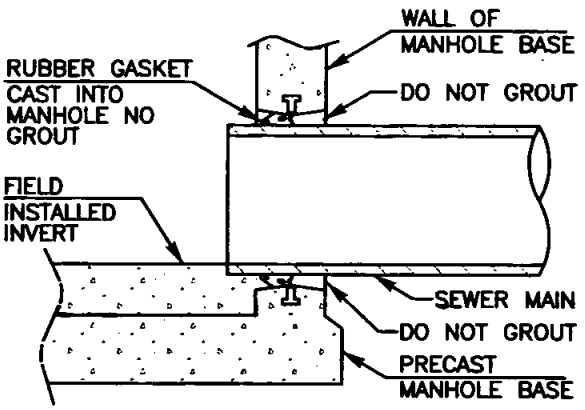

PRECAST MANHOLE BASE TYPE 'A'

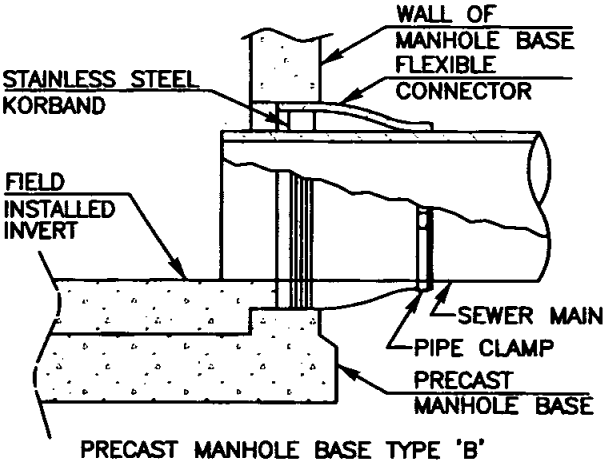

PRECAST MANHOLE BASE TYPE 'B'

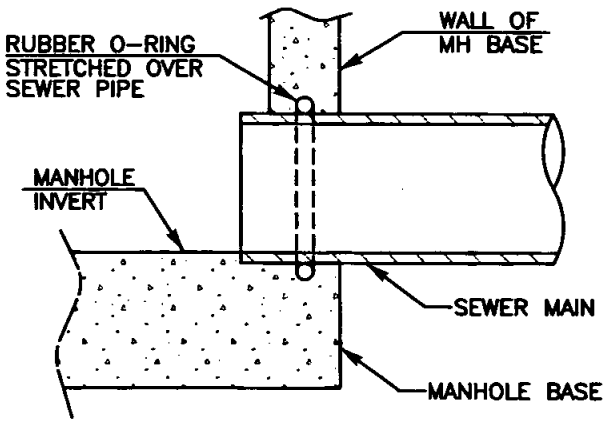

CAST IN PLACE MANHOLE BASE

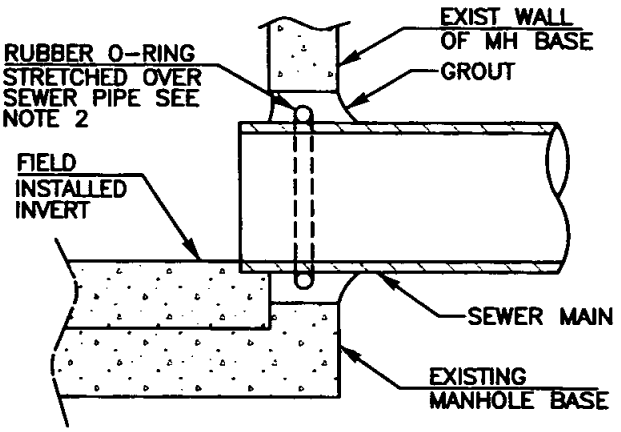

BREAKING INTO EXIST MANHOLE BASE

NOTES:
1) REFER TO AGENCY SPECIFICATIONS WHERE APPLICABLE
2) A RUBBER O-RING OR A FLEXIBLE CONNECTOR (AS SHOWN IN PRECAST MANHOLE BASE TYPE 'B') CAN BE USED WHEN BREAKING INTO EXISTING MANHOLE
3) FOR MANHOLES REQUIRING COATING AND LINING SEE SM-07
4) MATERIALS SHALL BE SELECTED FROM THE AGENCY'S APPROVED MATERIALS LIST

Revision	By	Approved	Date
ORIGINAL		Kercheval	12/75
Add Metric		T. Stanton	03/03
Replaced S-02		J. Tomasulo	03/05

SAN DIEGO REGIONAL STANDARD DRAWING

MANHOLE PIPE CONNECTORS

RECOMMENDED BY THE SAN DIEGO REGIONAL STANDARDS COMMITTEE

T. Stanton 03/24/2005

Chairperson R.C.E. 19246 Date

DRAWING NUMBER SM-04

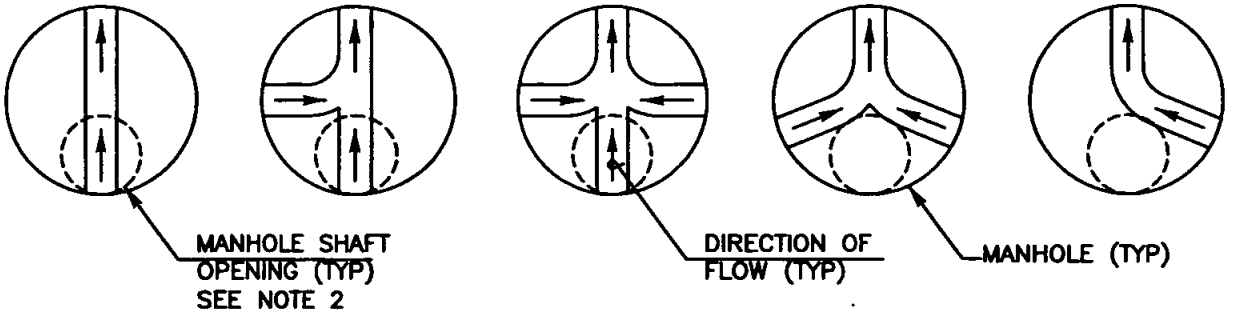

MANHOLE ACCESS LOCATION PLAN VIEW

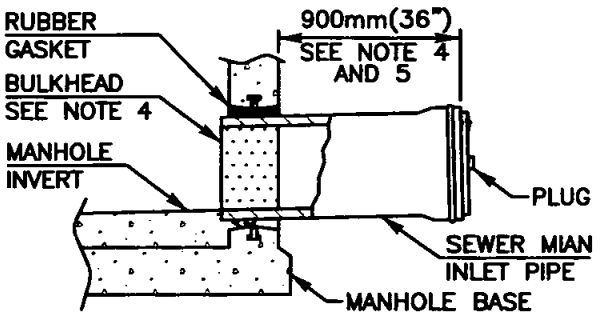

MANHOLE STUB OUT FOR FUTURE CONNECTION

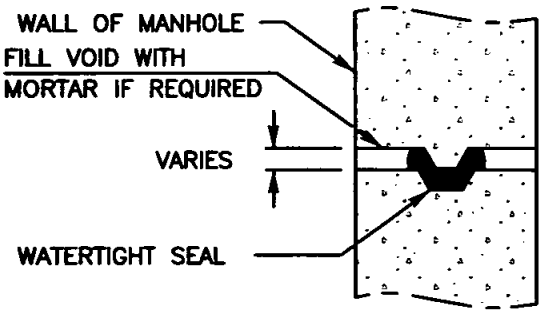

WATERTIGHT MANHOLE JOINT

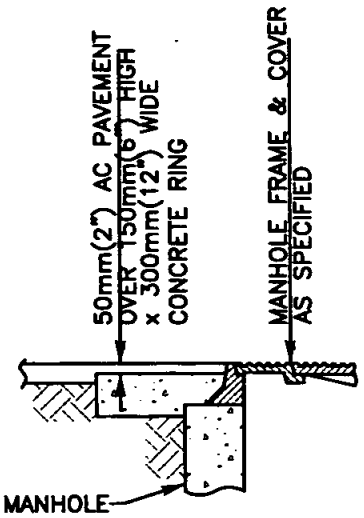

PAVED AND
TRAVELED AREAS
TYPE A

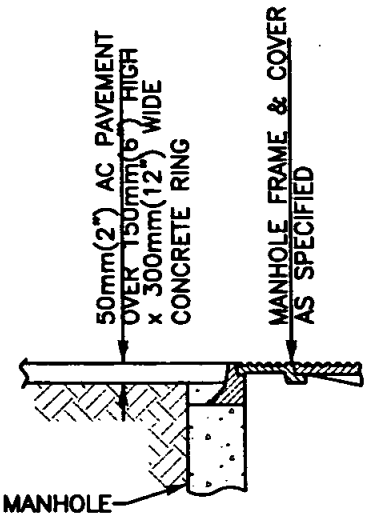

PAVED AND
TRAVELED AREAS
TYPE B

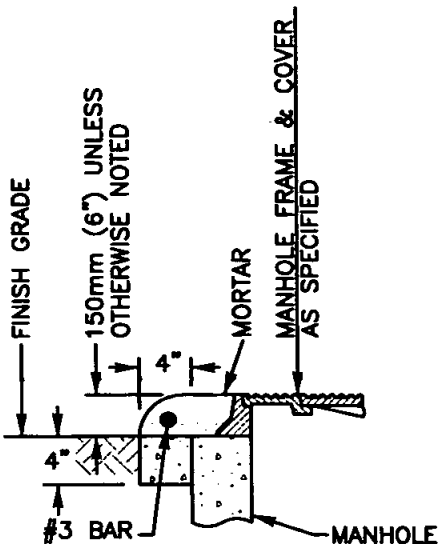

UNPAVED, UNTRAVELED,
SHOULDER AREAS, AREAS
IN EASEMENTS
TYPE C

NOTES:
1) REFER TO AGENCY SPECIFICATIONS WHERE APPLICABLE
2) VERTICAL WALL OF CONE TO BE ON THE UP STREAM SIDE OF MANHOLE
3) FOR MANHOLES REQUIRING COATING AND LINING SEE SM-07
4) BULDHEADS SHALL BE INSTALLED AT THE MANHOLE END OF STUBS
5) SEWER MAIN TO BE LAID WITH BELLS UP-GRADE
6) MATERIALS SHALL BE SELECTED FROM THE AGENCY'S APPROVED MATERIALS LIST

Revision	By	Approved	Date
ORIGINAL		Kercheval	12/75
Add Metric		T. Stanton	03/03
Replaced S-02		J. Tomasulo	03/05

SAN DIEGO REGIONAL STANDARD DRAWING

MANHOLE MISCELLANEOUS DETAILS

RECOMMENDED BY THE SAN DIEGO REGIONAL STANDARDS COMMITTEE

T. Stanton 03/24/2005

Chairperson R.C.E. 19246 Date

DRAWING NUMBER **SM-05**

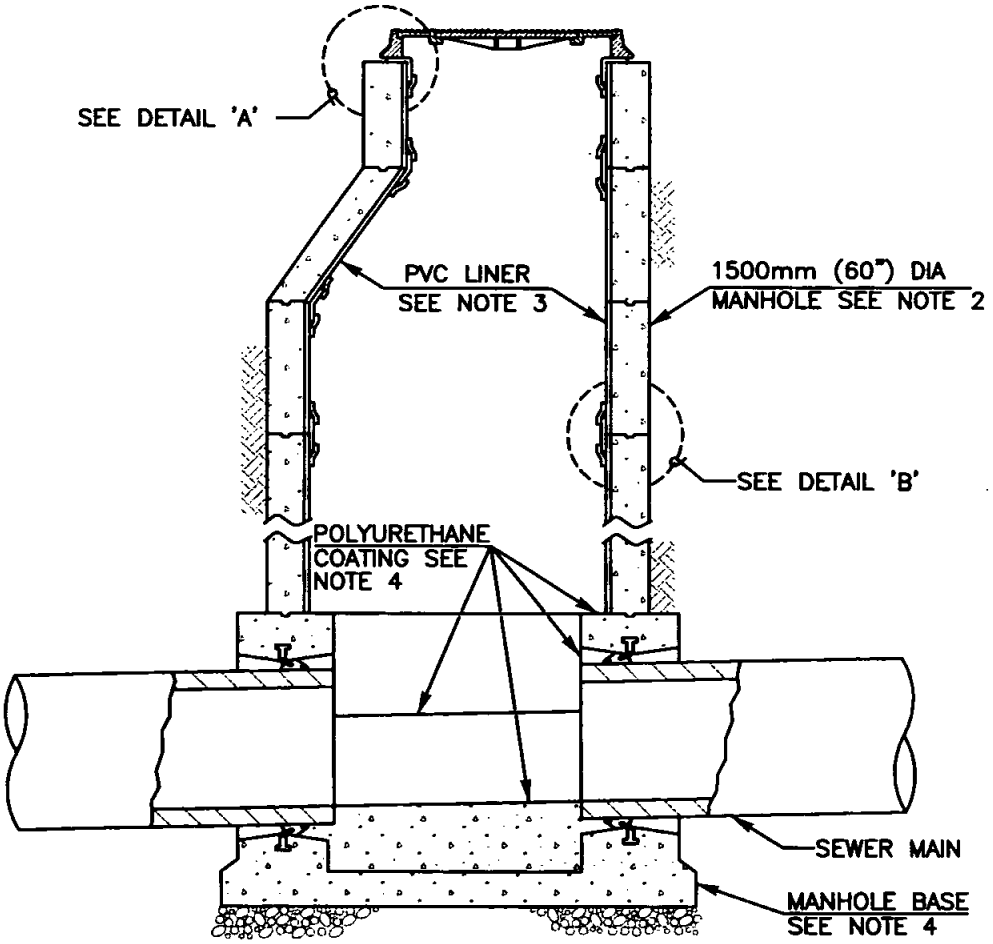

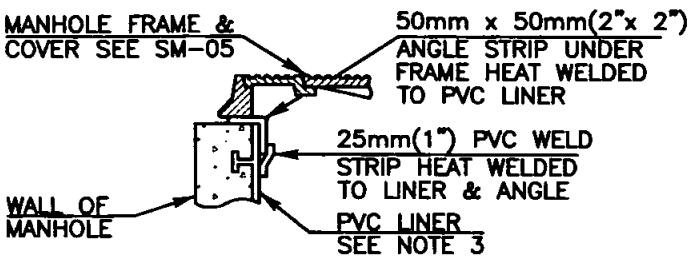

DETAIL "A" MANHOLE
FRAME & COVER

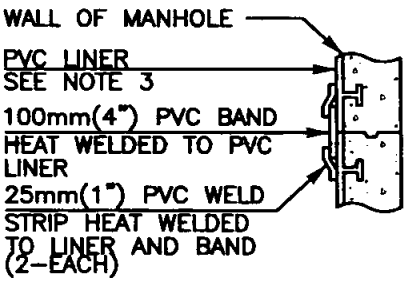

DETAIL "B" MANHOLE
JOINT SECTIONS

NOTES:
1) REFER TO AGENCY SPECIFICATIONS WHERE APPLICABLE
2) MANHOLES FOR SEWER MAINS 450mm(18") AND LARGER SHALL BE COATED AND LINED
3) MANHOLE SHAFT AND CONE SECTIONS, AND GRADE RINGS SHALL HAVE A PVC LINER PLACED WITH T-SHAPED SUPPORTS INTEGRALLY CAST INTO THE CONCRETE
4) ELASTOMERIC POLYURETHANE COATING SHALL BE APPLIED TO THE INTERIOR OF MANHOLE BASES
5) MATERIALS SHALL BE SELECTED FROM THE AGENCY'S APPROVED MATERIALS LIST

Revision	By	Approved	Date
ORIGINAL		Kercheval	12/75
Add Metric		T. Stanton	03/03
Replaced S-02		J. Tomasulo	03/05

SAN DIEGO REGIONAL STANDARD DRAWING

MANHOLE COATING AND LINING SYSTEM

RECOMMENDED BY THE SAN DIEGO REGIONAL STANDARDS COMMITTEE

03/24/2005

Chairperson R.C.E. 19246 Date

DRAWING NUMBER SM-07

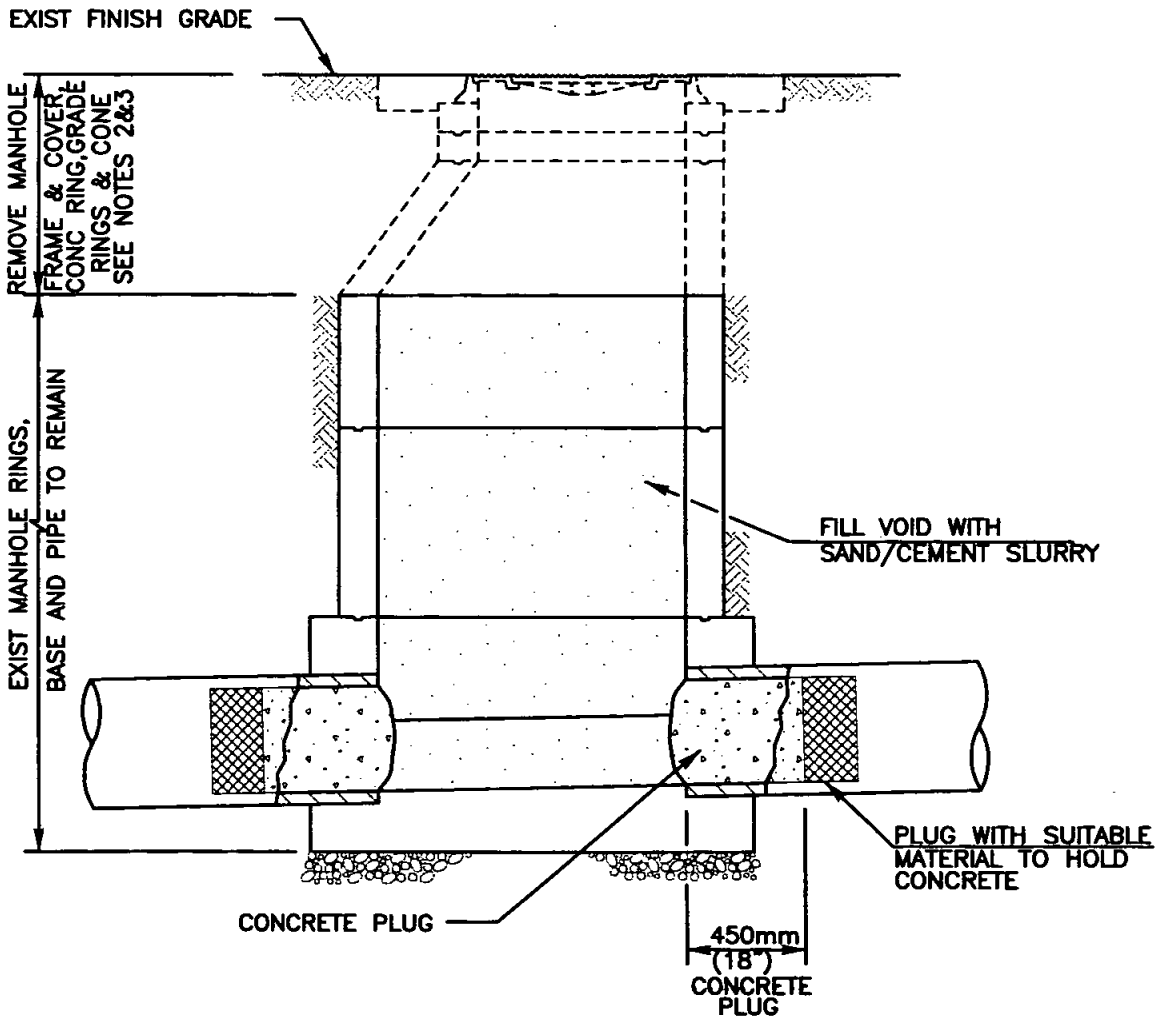

NOTES:
1) REFER TO AGENCY SPECIFICATIONS WHERE APPLICABLE
2) ALL SALVAGED MATERIAL BECOMES PROPERTY OF AGENCY OF JURISDICTION
3) BACKFILL PER AGENCY'S REQUIREMENT
4) FOR CUTTING & PLUGGING ABANDONED SEWER MAINS SEE WP-03

LEGEND ON PLANS

Revision	By	Approved	Date
ORIGINAL		Kercheval	12/75
Add Metric		T. Stanton	03/03
Replaced S-02		J. Tomasulo	03/05

SAN DIEGO REGIONAL STANDARD DRAWING

EXISTING MANHOLE ABANDONMENT

RECOMMENDED BY THE SAN DIEGO REGIONAL STANDARDS COMMITTEE

T. Stanton 03/24/2005

Chairperson R.C.E. 19246 Date

DRAWING NUMBER SM-08

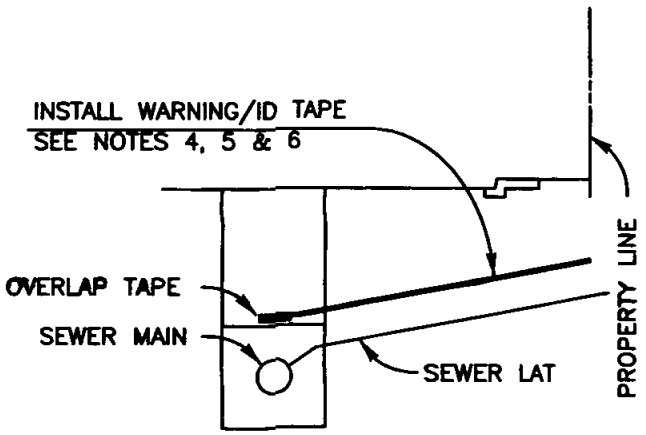

SECTION AT SEWER LATERALS

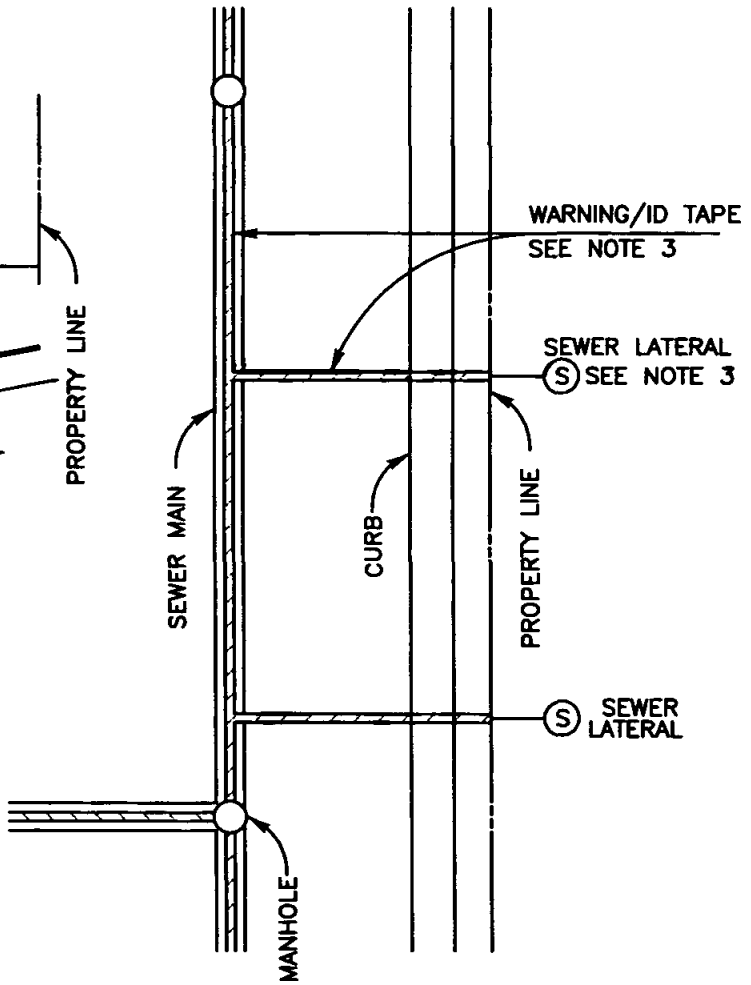

PLAN

NOTES:
1) REFER TO AGENCY SPECIFICATIONS WHERE APPLICABLE
2) WARNING/IDENTIFICATION TAPE SHALL BE INSTALLED AS SPECIFIED BY AGENCY
3) STAMP OR CHISEL A 50mm (2") HIGH 'S' IN CURB FACE TO IDENTIFY SEWER LATERAL LOCATION
4) FOR SEWER LATERALS EXTEND TAPE TO PROPERTY LINE
5) DEPTH OF WARNING/IDENTIFICATION TAPE AS SPECIFIED BY AGENCY
6) MATERIALS SHALL BE SELECTED FROM THE AGENCY'S APPROVED MATERIALS LIST

Revision	By	Approved	Date
ORIGINAL		Kercheval	12/75
Add Metric		T. Stanton	03/03
Replaced S-19		J. Tomasulo	03/05

SAN DIEGO REGIONAL STANDARD DRAWING

WARNING/IDENTIFICATION TAPE INSTALLATION

RECOMMENDED BY THE SAN DIEGO REGIONAL STANDARDS COMMITTEE

03/24/2005

Chairperson R.C.E. 19246 Date

DRAWING NUMBER SP-01

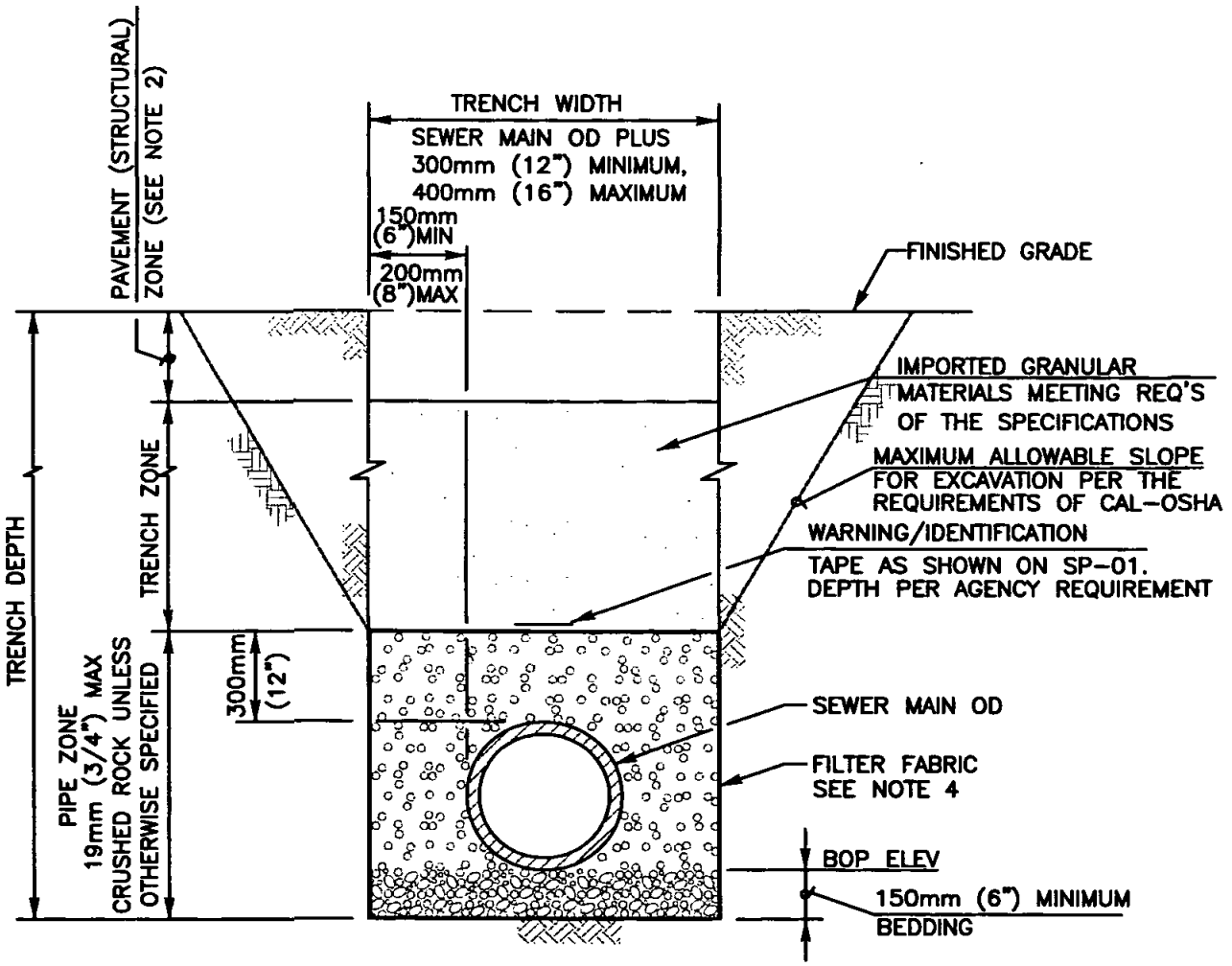

TRENCH SECTION

NOTES:
1) REFER TO AGENCY SPECIFICATIONS FOR TRENCHING, BACKFILLING AND COMPACTING WHERE APPLICABLE
2) PAVING OR PAVEMENT REPAIR TO BE DONE IN ACCORDANCE WITH AGENCY OF JURISDICTION
3) EXCAVATE BELL HOLES AT EACH JOINT TO PERMIT PROPER ASSEMBLY AND INSPECTION OF THE ENTIRE JOINT
4) FILTER FABRIC AS REQUIRED BY AGENCY OF JURISDICTION (WITH A MINIMUM 12" OVERLAP).

Revision	By	Approved	Date
ORIGINAL		Kercheval	12/75
Add Metric		T. Stanton	03/03
Replaced S-04		J. Tomasulo	03/05

SAN DIEGO REGIONAL STANDARD DRAWING

PIPE BEDDING AND TRENCH BACKFILL FOR SEWER FACILITIES

RECOMMENDED BY THE SAN DIEGO REGIONAL STANDARDS COMMITTEE

T. Stanton 03/24/2005

Chairperson R.C.E. 19246 Date

DRAWING NUMBER SP-02

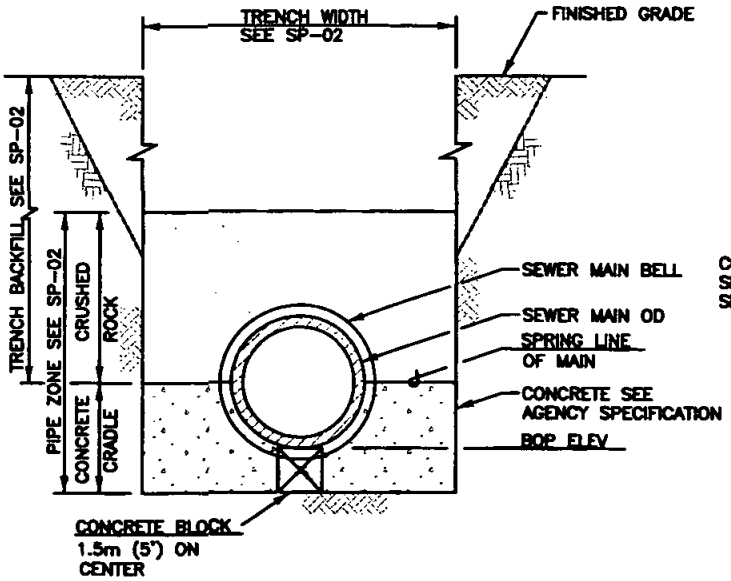

TRENCH SECTION
CONCRETE PIPE CRADLE

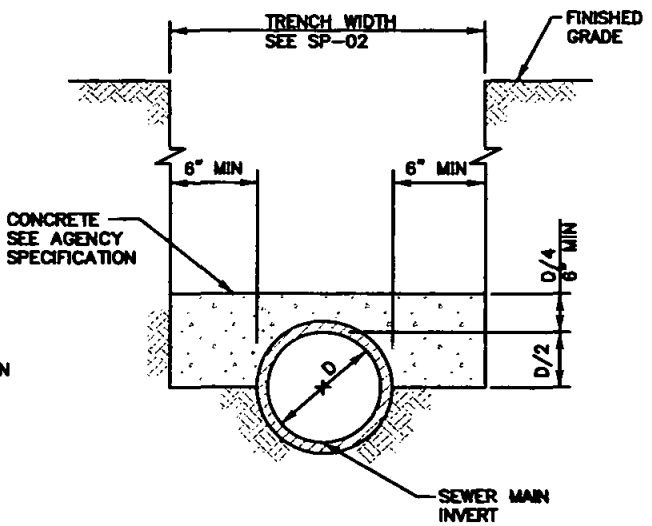

TRENCH SECTION
CONCRETE PROTECTION

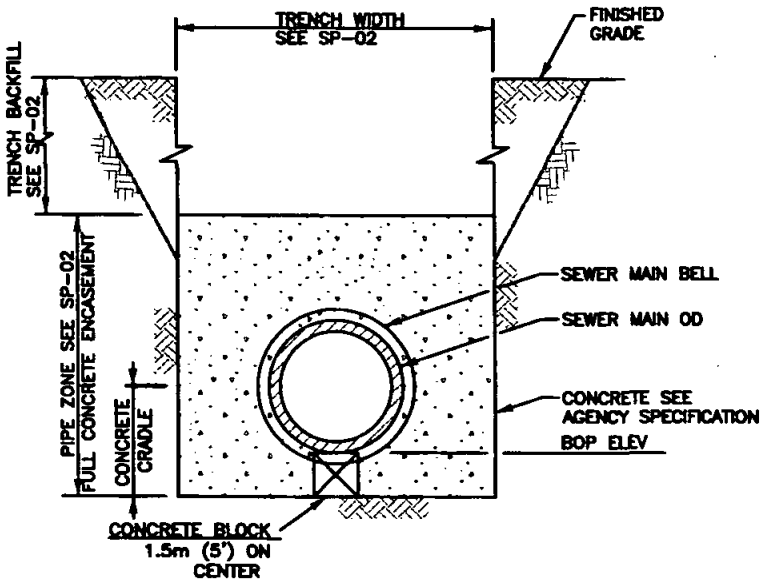

TRENCH SECTION
CONCRETE PIPE ENCASEMENT

NOTES:
1) REFER TO AGENCY SPECIFICATIONS FOR TRENCHING, BACKFILLING AND COMPACTING WHERE APPLICABLE
2) CONCRETE CRADLE SHALL BE USED WHEN THE TRENCH WIDTH AT THE UPPER LIMIT OF THE PIPE ZONE EXCEEDS THE MAX WIDTH SPECIFIED ON SP-02 AND OR DIRECTED BY AGENCY'S ENGINEER
3) FOR PIPE BEDDING AND TRENCH BACKFILL SEE SP-02

LEGEND ON PLANS

Revision	By	Approved	Date
ORIGINAL		Kercheval	12/75
Add Metric		T. Stanton	03/03
Replaced S-06		J. Tomasulo	03/05

SAN DIEGO REGIONAL STANDARD DRAWING

CONCRETE PROTECTION FOR SEWER PIPE

RECOMMENDED BY THE SAN DIEGO REGIONAL STANDARDS COMMITTEE

T. Stanton 03/24/2005

Chairperson R.C.E. 19246 Date

DRAWING NUMBER SP-03

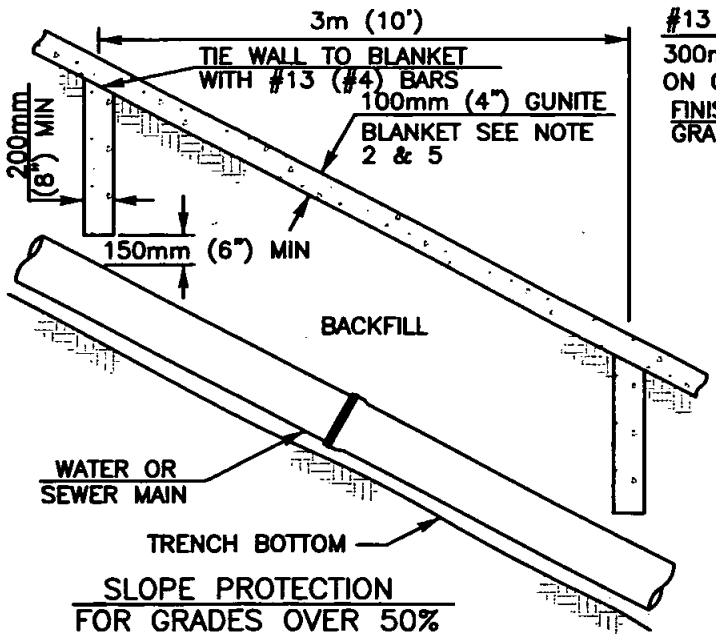

SLOPE PROTECTION
FOR GRADES OVER 50%

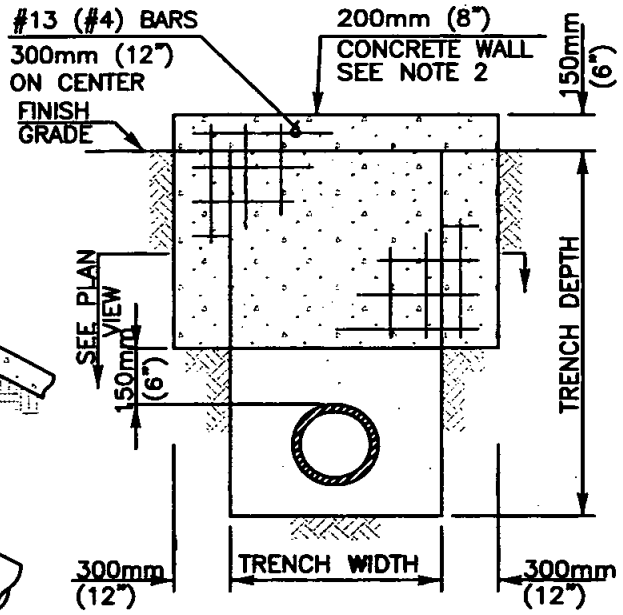

WALL SECTION 'A' ELEVATION

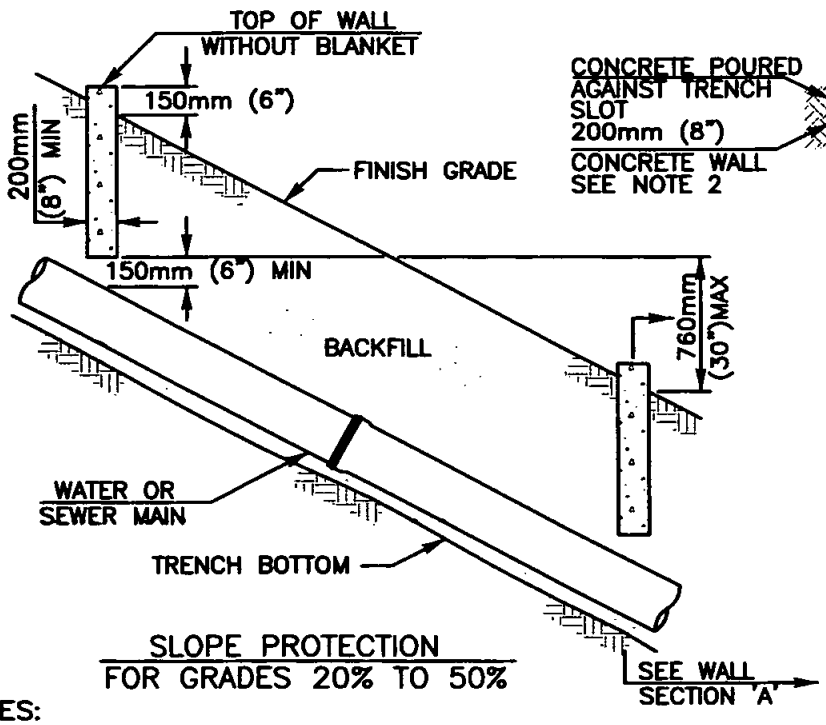

SLOPE PROTECTION
FOR GRADES 20% TO 50%

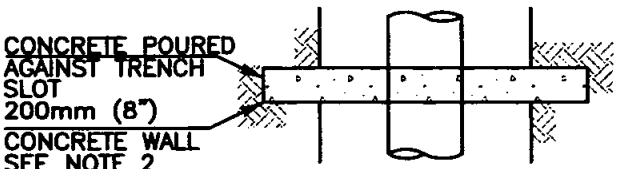

WALL SECTION 'A' PLAN

NOTES:

1) REFER TO AGENCY SPECIFICATIONS WHERE APPLICABLE
2) THE DETAILS SHOWN REPRESENT THE MINIMUM REQUIRED. THE ENGINEER OF WORK IS REQUIRED TO PROVIDE A SUBMITTAL TO THE AGENCY OF JURISDICTION FOR REVIEW AND APPROVAL BY THE AGENCY'S ENGINEER PRIOR TO INSTALLATION
3) WALLS SHALL BE REINFORCED CONCRETE OR 200mm x 200mm x 400mm (8" x 8" x 16") CONCRETE BLOCK, REINFORCED AND ALL CORES FILLED WITH GROUT SEE SPECIFICATIONS
4) FOR GRADES OVER 50%, SLOPE PROTECTION SHALL ALSO INCLUDE AC PAVING, CONCRETE SLAB OR GUNITE BLANKET PLACED OVER THE PIPELINE ALIGNMENT
5) 100mm (4") GUNITE BLANKET WITH 150mm (6") SQUARE x 10 GAGE WIRE FABRIC AT THE ENGINEERS DISCRETION

LEGEND ON PLANS

Revision	By	Approved	Date
ORIGINAL		J. Tomasulo	03/05

SAN DIEGO REGIONAL STANDARD DRAWING

SLOPE PROTECTION INSTALLATIONS

RECOMMENDED BY THE SAN DIEGO REGIONAL STANDARDS COMMITTEE

03/24/2005

Chairperson R.C.E. 19246 Date

DRAWING NUMBER SP-05

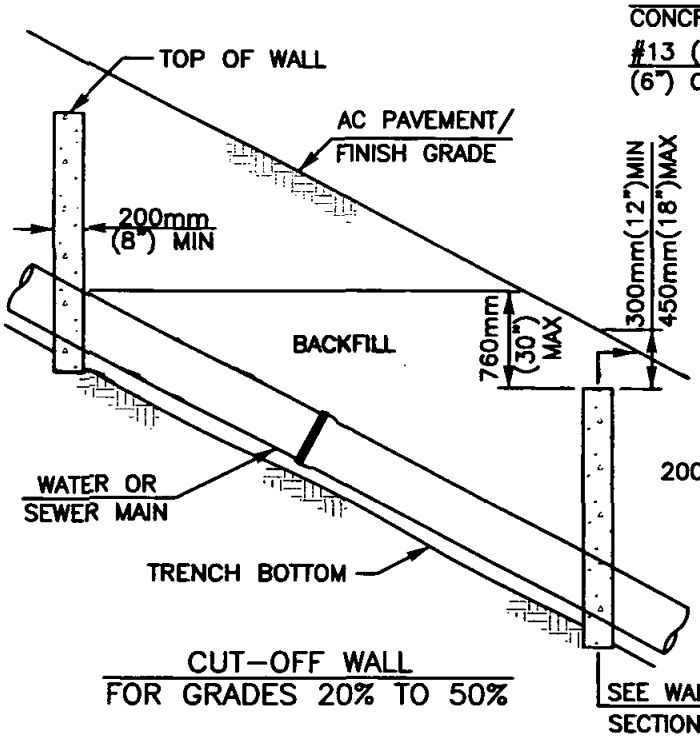

CUT-OFF WALL
FOR GRADES 20% TO 50%

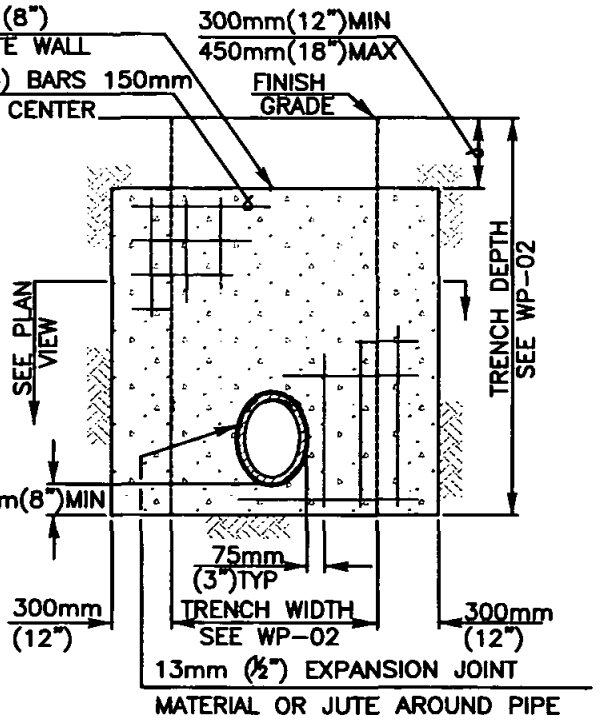

WALL SECTION 'A' ELEVATION

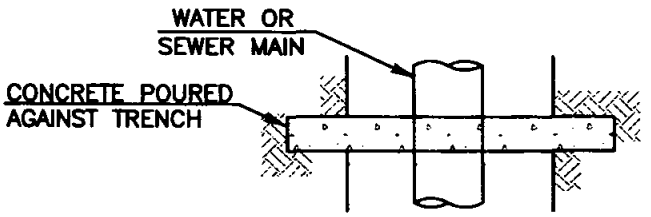

WALL SECTION 'A' PLAN

NOTES:
1) REFER TO AGENCY SPECIFICATIONS WHERE APPLICABLE
2) FOR USE AS TRENCH BACKFILL STABILIZATION IN TRAVELED AREAS
3) THE DETAILS SHOWN REPRESENT THE MINIMUM REQUIRED. THE ENGINEER OF WORK IS REQUIRED TO PROVIDE A SUBMITTAL TO THE AGENCY OF JURISDICTION FOR REVIEW AND APPROVAL BY THE AGENCY'S ENGINEER PRIOR TO INSTALLATION
4) WALLS SHALL BE REINFORCED CONCRETE OR 200mm x 200mm x 400mm (8" x 8" x 16") CONCRETE BLOCK, REINFORCED AND ALL CORES FILLED WITH GROUT SEE SPECIFICATIONS
5) FOR GRADES OVER 50% SEE WP-05/SP-05

LEGEND ON PLANS

Revision	By	Approved	Date
ORIGINAL		J. Tomasuto	03/05

SAN DIEGO REGIONAL STANDARD DRAWING

CUT-OFF WALL INSTALLATION IN TRAVELED AREAS

RECOMMENDED BY THE SAN DIEGO REGIONAL STANDARDS COMMITTEE

03/24/2005

Chairperson R.C.E. 19246 Date

DRAWING NUMBER SP-07

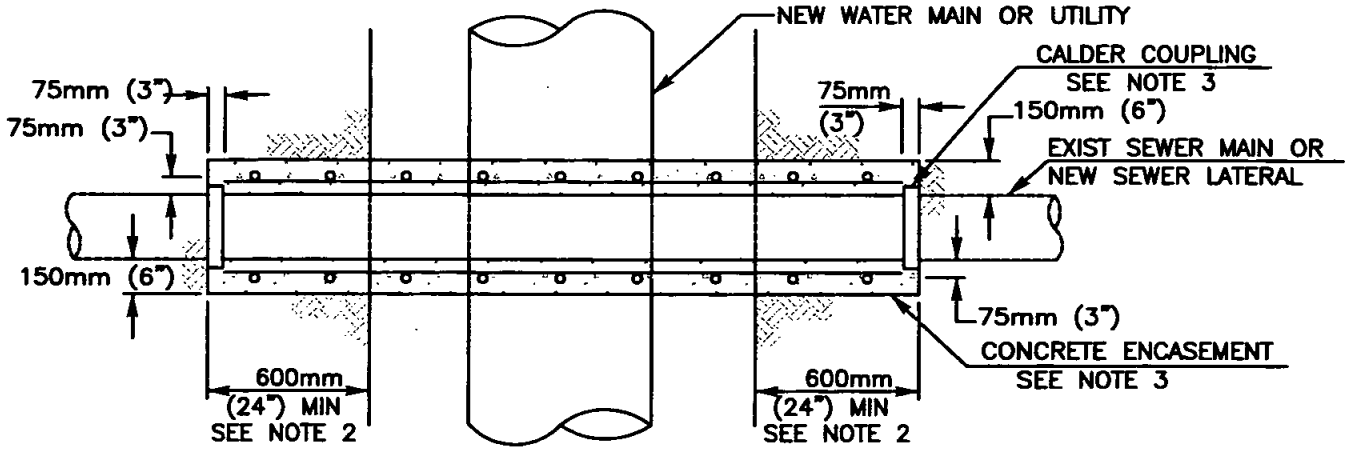

PLAN

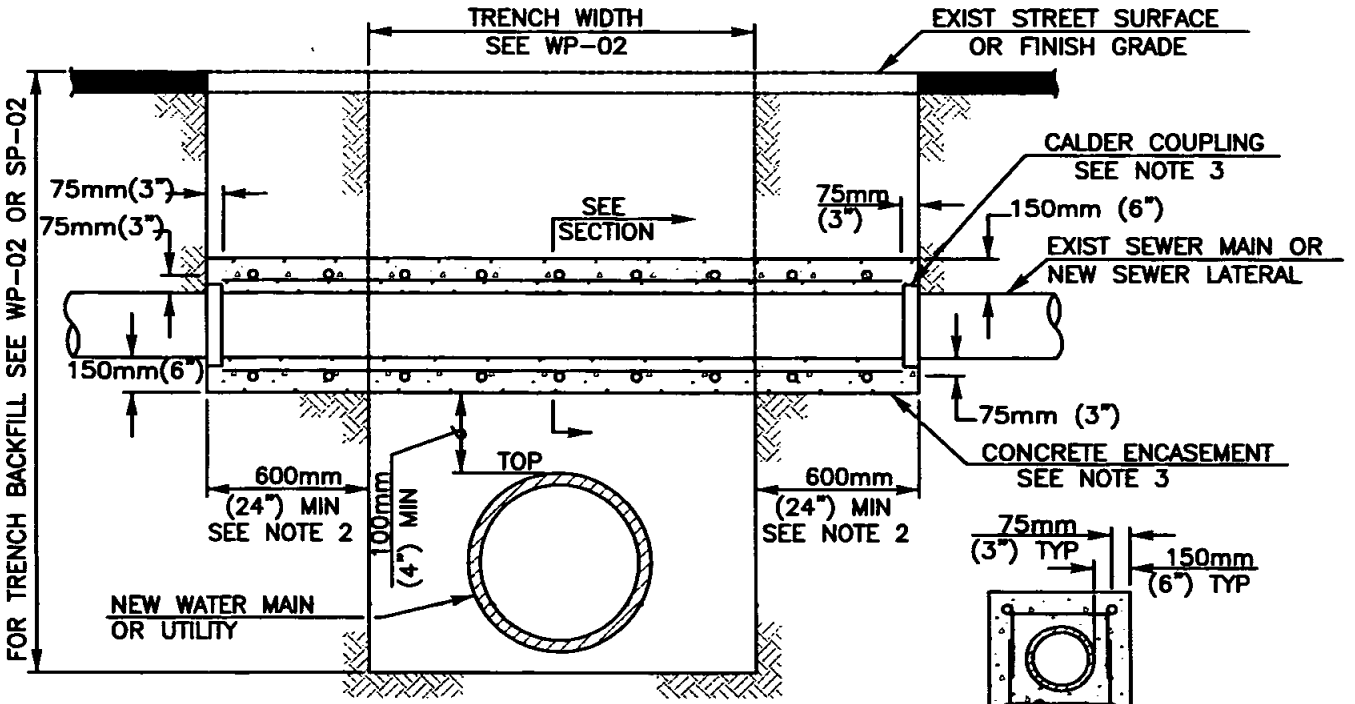

ELEVATION

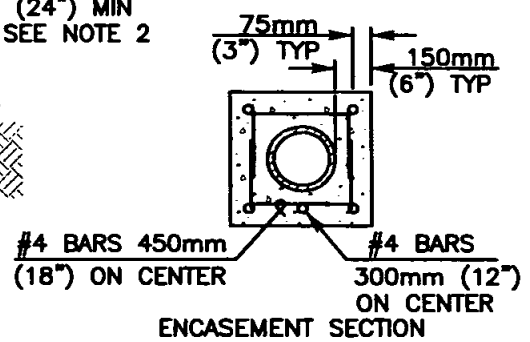

ENCASEMENT SECTION

NOTES:

1) REFER TO AGENCY SPECIFICATIONS FOR PROTECTION OF EXISTING FACILITIES
2) ENCASEMENT SHALL EXTEND TO FIRST JOINT BEYOND BOTH SIDES OF TRENCH [600mm (24") MIN 1200mm (48") MAX OF SUITABLE NATIVE SUPPORT BEYOND EDGE OF TRENCH].
3) CONCRETE ENCASEMENT REQUIRED FOR SEWER MAINS ONLY. CALDER COUPLINGS REQUIRED FOR SEWER LATERALS ONLY. SEWER LATERALS TO BE REPLACED WITH SCH. 80 PVC WITH NO INTERMEDIATE JOINTS.
4) FOR PIPE BEDDING AND TRENCH BACKFILL SEE WP-02 OR SP-02.

LEGEND ON PLANS

Revision	By	Approved	Date
ORIGINAL		J. Tomasulo	03/05

SAN DIEGO REGIONAL STANDARD DRAWING

PIPE SUPPORT FOR UNDERCUT SEWER MAINS OR SEWER LATERALS

RECOMMENDED BY THE SAN DIEGO REGIONAL STANDARDS COMMITTEE

03/24/2005

Chairperson R.C.E. 19246 Date

DRAWING NUMBER SP-09

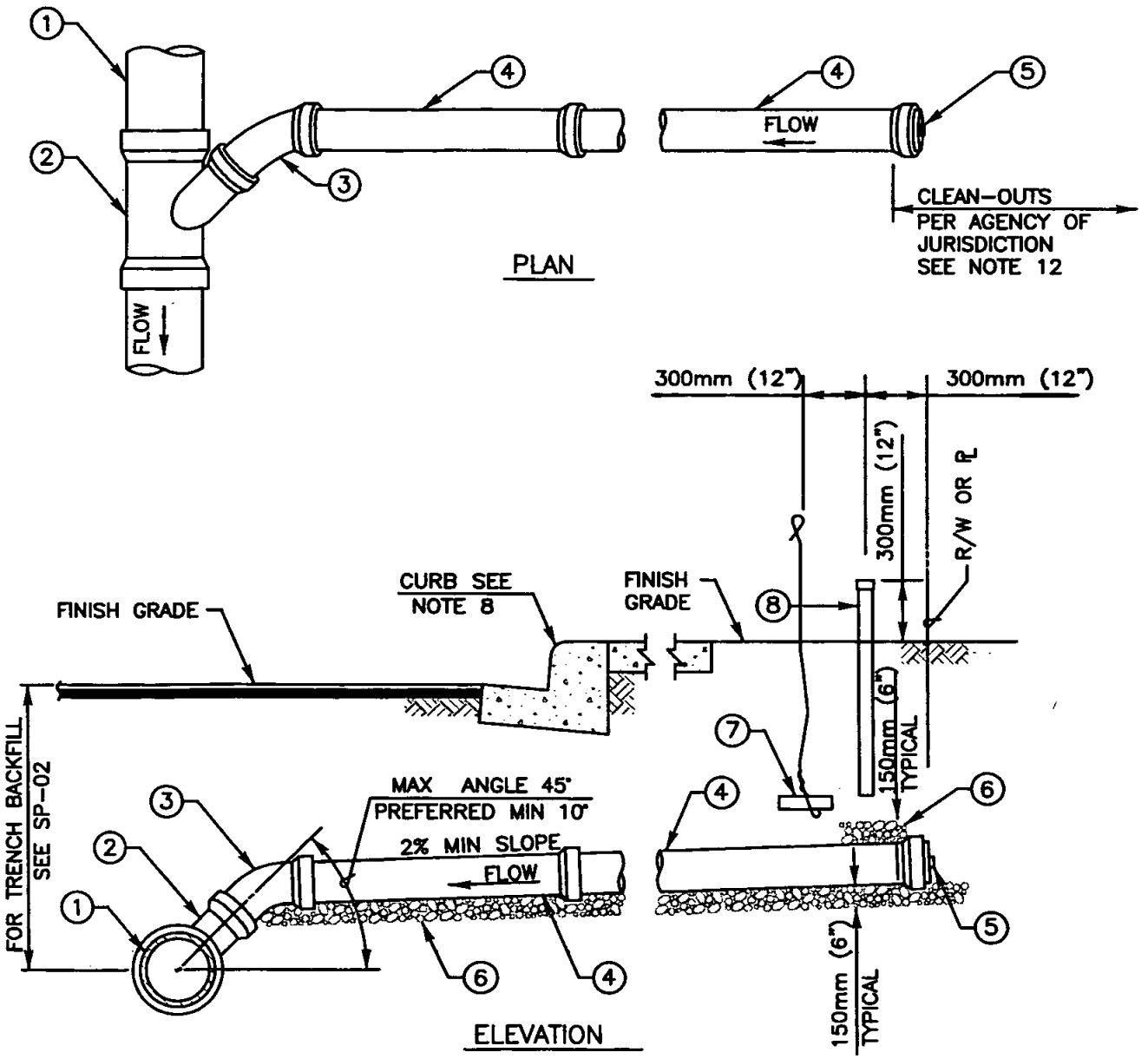

(INDICATE SIZE)

S

LEGEND ON PLANS

FOR SEWER LATERAL NOTES SEE DETAIL SS-03

ITEM NO	SIZE AND DESCRIPTION	ITEM NO	SIZE AND DESCRIPTION
1	SEWER MAIN	5	PLUG OR CAP
2	45° WYE	6	19mm (3/4") MAXIMUM CRUSHED ROCK
3	45° ELBOW	7	#9 WIRE ATTACHED TO A BRICK
4	PIPE LATERAL SEE NOTE 3 & 5	8	100mm (4") PVC PIPE WITH GLUED CAP

Revision	By	Approved	Date
ORIGINAL		Kercheval	12/75
Add Metric		T. Stanton	03/03
Replaced S-13		J. Tomasulo	03/05

SAN DIEGO REGIONAL STANDARD DRAWING

100mm (4") AND 150mm (6") SEWER LATERAL INSTALLATION

RECOMMENDED BY THE SAN DIEGO REGIONAL STANDARDS COMMITTEE

03/24/2005

Chairperson R.C.E. 19246 Date

DRAWING NUMBER SS-01

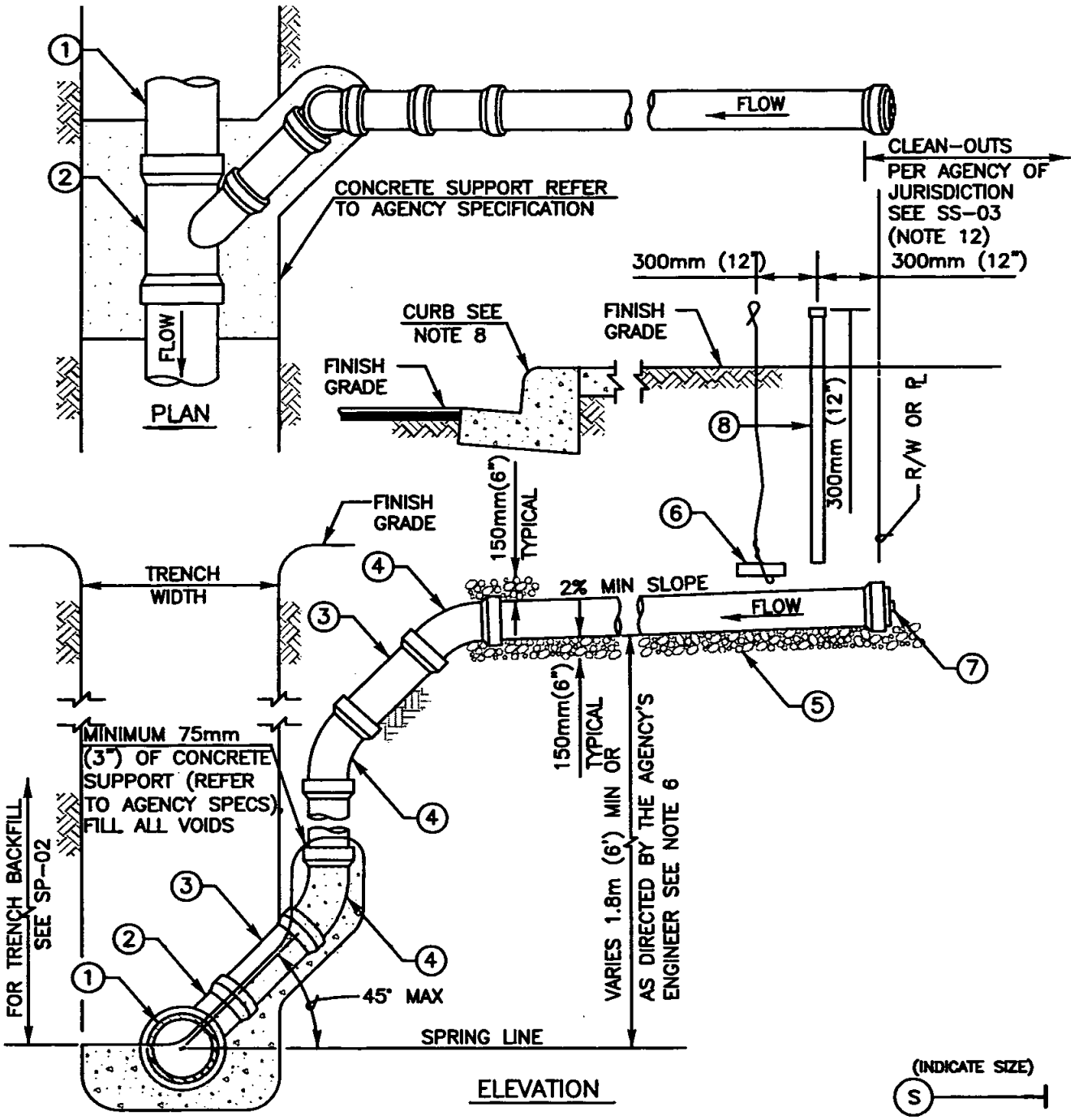

FOR SEWER LATERAL NOTES SEE DETAIL SS-03

ITEM NO	SIZE AND DESCRIPTION	ITEM NO	SIZE AND DESCRIPTION
1	SEWER MAIN	5	19mm (3/4") MAXIMUM CRUSHED ROCK
2	45° WYE	6	#9 WIRE ATTACHED TO A BRICK
3	PIPE	7	PLUG OR CAP
4	45° ELBOW	8	100mm (4") PVC PIPE WITH GLUED CAP

Revision	By	Approved	Date
ORIGINAL		Kercheval	12/75
Add Metric		T. Stanton	03/03
Replaced S-13		J. Tomasulo	03/05

SAN DIEGO REGIONAL STANDARD DRAWING

100mm (4") AND 150mm (6") DEEP-CUT SEWER LATERAL INSTALLATION

RECOMMENDED BY THE SAN DIEGO REGIONAL STANDARDS COMMITTEE

T. Stanton 03/24/2005

Chairperson R.C.E. 19246 Date

DRAWING NUMBER SS-02

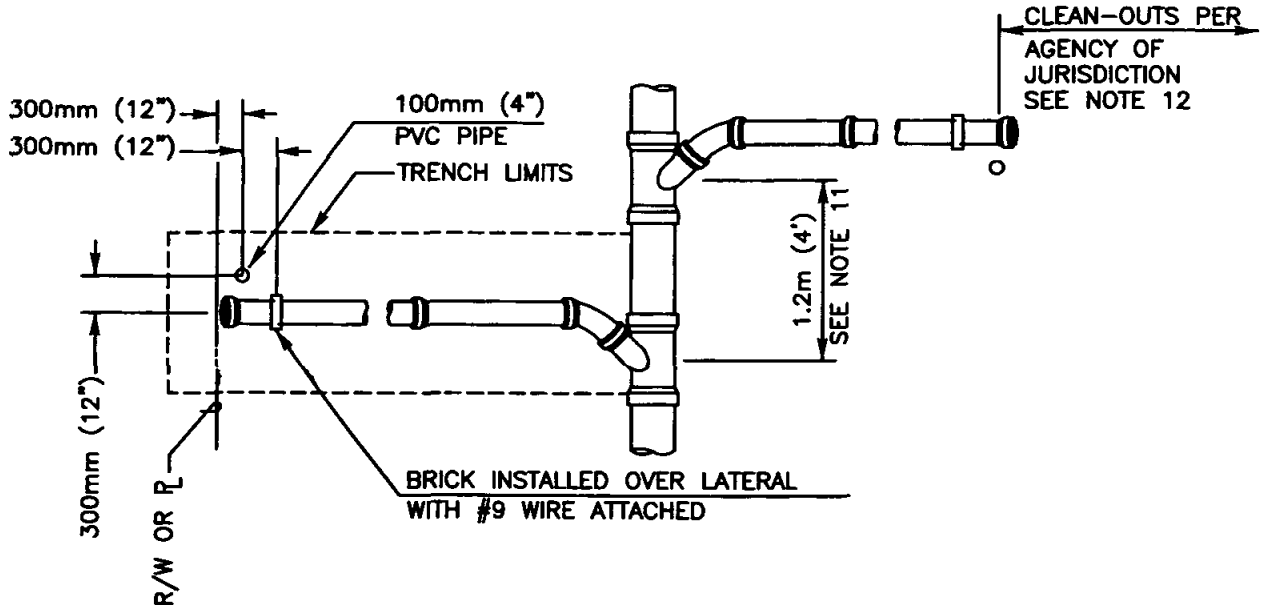

SEWER LATERAL DETAIL
SEE NOTE 10 BELOW

NOTES:
1) REFER TO AGENCY SPECIFICATIONS WHERE APPLICABLE
2) IN NO CASE SHALL LATERAL CONNECT DIRECTLY ON TOP OF SEWER MAIN
3) LATERAL SHALL BE INSTALLED TO PROPERTY LINE UNLESS SPECIFIED ON PLANS
4) MINIMUM 1.2m (4') COVER ABOVE LATERAL AT PROPERTY LINE
5) LATERAL TO HAVE A MINIMUM SLOPE OF 2%
6) VERTICAL PIPE SHALL BE BRACED WHILE BACKFILLING TRENCH
7) INSTALL WARNING/IDENTIFICATION TAPE AS SHOWN ON SP-01
8) STAMP OR CHISEL A 50mm (2") HIGH "S" IN CURB FACE OVER LATERAL TO IDENTIFY SEWER LATERAL LOCATION
9) MATERIALS SHALL BE SELECTED FROM THE AGENCY'S APPROVED MATERIALS LIST
10) FOR SEWER LATERAL INSTALLATIONS SEE SS-01 AND SS-02
11) FOR SEWERS SPECIFIED AS PVC PIPE, A MINIMUM 0.9m (3') SECTION OF PIPE IS REQUIRED BETWEEN FITTINGS
12) SEWER CLEAN-OUT SEE SC-01 TYPE B AS REQUIRED BY AGENCY OF JURISDICTION

(INDICATE SIZE)
S
LEGEND ON PLANS

Revision	By	Approved	Date
ORIGINAL		Kercheval	12/75
Add Metric		T. Stanton	03/03
Replaced S-13		J. Tomasulo	03/05

SAN DIEGO REGIONAL STANDARD DRAWING

SEWER LATERAL NOTES AND DETAIL

RECOMMENDED BY THE SAN DIEGO REGIONAL STANDARDS COMMITTEE

T. Stanton 03/24/2005

Chairperson R.C.E. 19246 Date

DRAWING NUMBER SS-03

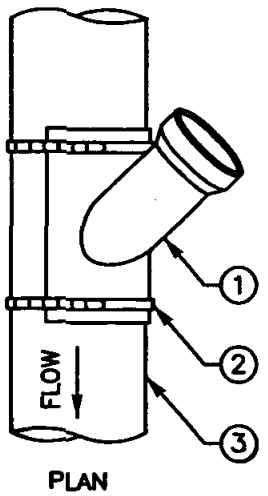

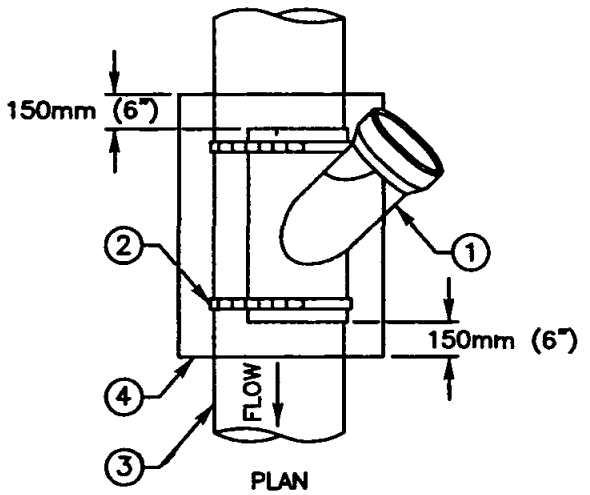

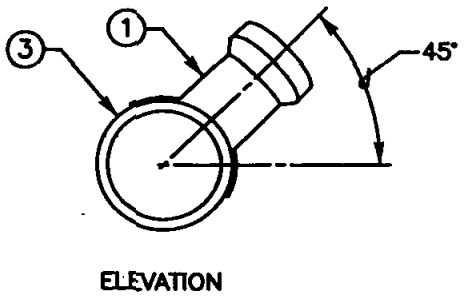

CUT IN WYE CONNECTION
TYPE A

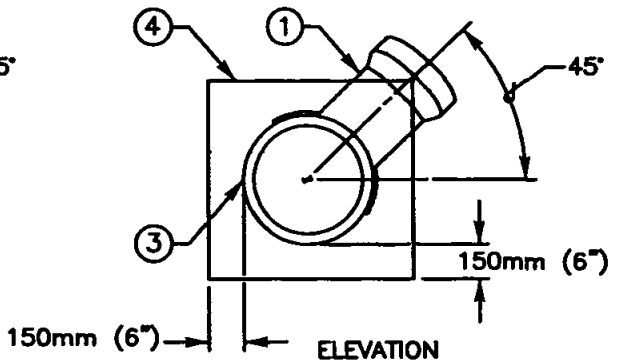

CUT IN WYE CONNECTION
TYPE B

NOTES:
1) REFER TO AGENCY SPECIFICATIONS WHERE APPLICABLE
2) CONNECTIONS TO EXISTING SEWER MAINS TO BE MADE BY AGENCY PERSONNEL IN ACCORDANCE WITH SPECIFICATIONS UNLESS OTHERWISE NOTED ON PLANS
3) IN NO CASE SHALL CONNECTION BE MADE DIRECTLY ON TOP OF SEWER MAIN
4) NO MORE THAN ONE CUT IN WYE WILL BE ALLOWED FOR EACH LENGTH OF EXISTING VCP SEWER MAIN
5) FOR SEWER LATERAL INSTALLATION SEE SS-01 AND SS-02
6) FOR TRENCH BACKFILL SEE SP-02
7) MATERIALS SHALL BE SELECTED FROM THE AGENCY'S APPROVED MATERIALS LIST

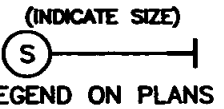

ITEM NO	SIZE AND DESCRIPTION	ITEM NO	SIZE AND DESCRIPTION
1	45° SADDLE WYE WITH GASKET	3	EXISTING SEWER MAIN
2	STAINLESS STEEL HOSE CLAMPS (2-EACH)	4	CONCRETE ENCASEMENT

Revision	By	Approved	Date
ORIGINAL		Kercheval	12/75
Add Metric		T. Stanton	03/03
Replaced S-13		J. Tomasulo	03/05

SAN DIEGO REGIONAL STANDARD DRAWING

100mm (4") AND 150mm (6") SEWER CUT-IN WYE CONNECTIONS

RECOMMENDED BY THE SAN DIEGO REGIONAL STANDARDS COMMITTEE

03/24/2005

Chairperson R.C.E. 19246 Date

DRAWING NUMBER SS-04

WATER SYSTEMS

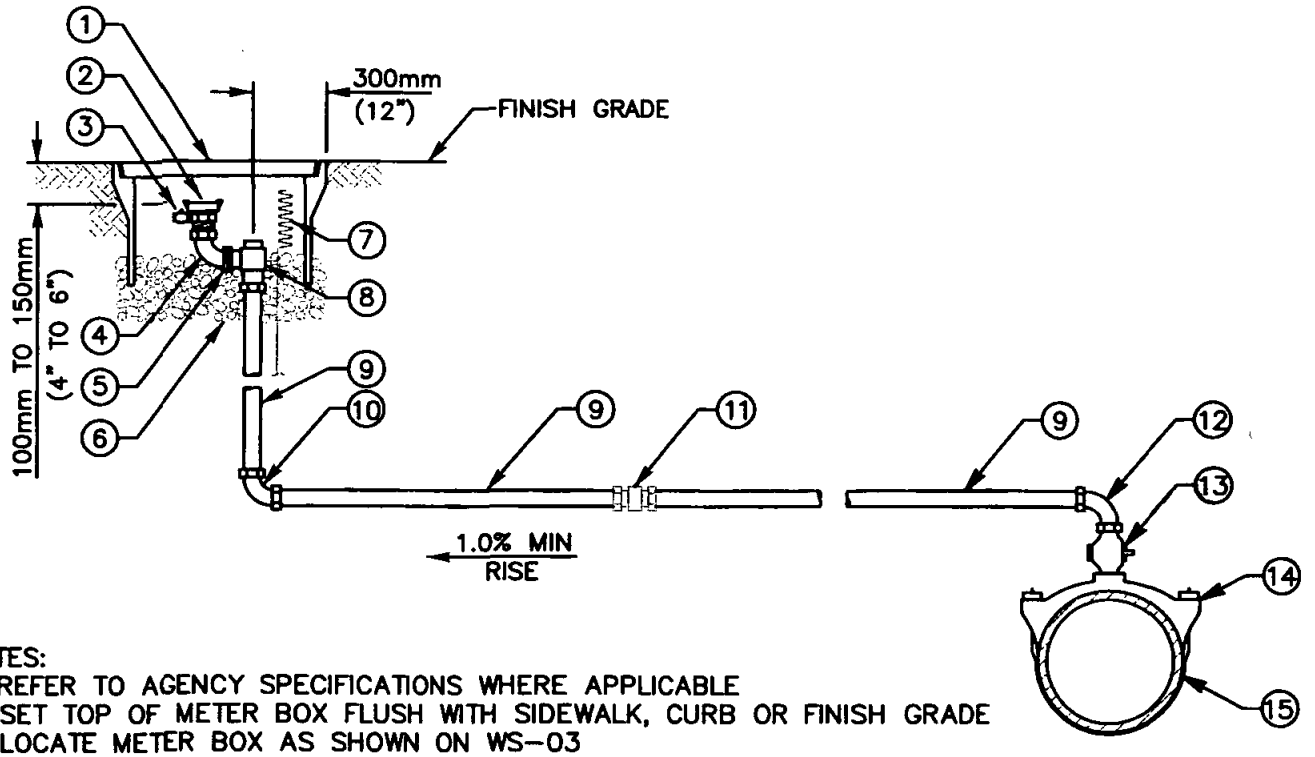

NOTES:
1) REFER TO AGENCY SPECIFICATIONS WHERE APPLICABLE
2) SET TOP OF METER BOX FLUSH WITH SIDEWALK, CURB OR FINISH GRADE
3) LOCATE METER BOX AS SHOWN ON WS-03
4) INSTALL WARNING/IDENTIFICATION TAPE AS SHOWN ON WP-01
5) MANUAL AIR VALVE INSTALLATION AT END OF MAIN TO BE SADDLED 24" FROM END CAP
6) MANUAL AIR VALVE ASSEMBLIES INSTALLED FOR THE USE OF RECYCLED WATER SHALL BE IDENTIFIED AS DESCRIBED IN AGENCY'S SPECIFICATIONS
7) ON STEEL MAINS USE WELD ON COUPLINGS, ON DUCTILE IRON MAINS USE DUCTILE IRON SERVICE SADDLES (INSULATING BUSHINGS ARE REQUIRED)
8) CAM & GROOVE ADAPTER SHALL BE DRILLED AND TAPPED AS REQUIRED FOR THE PRESSURE RELEASE PET COCK
9) MATERIALS SHALL BE SELECTED FROM THE AGENCY'S APPROVED MATERIALS LIST

50mm (2")

LEGEND ON PLANS

ITEM NO	SIZE AND DESCRIPTION	ITEM NO	SIZE AND DESCRIPTION
1	POLYMER METER BOX WITH LID 430mm x 760mm (17" x 30"), SEE NOTE 3	8	50mm (2") BRONZE COMP x FLG ANGLE METER STOP WITH LOCK WING
2	50mm (2") CAM & GROOVE ADAPTER x MIPT WITH LOCKING DUST CAP, SEE NOTE 8	9	50mm (2") x REQUIRED LENGTH COPPER PIPE TYPE "K" RIGID OR SOFT
3	6mm (1/4") PRESSURE PET COCK	10	50mm (2") 90° BRONZE COMPRESSION ELL
4	50mm (2") 90° BRONZE MIPT x FIPT ELL	11	50mm (2") BRONZE COMPRESSION COUPLING COPPER TO COPPER (IF REQUIRED)
5	50mm (2") OVAL METER FLANGE FLG x FIPT, WITH GASKET	12	50mm (2") 90° BRONZE FIPT x COMP ELL
6	10mm (3/8") ROCK 100mm TO 150mm (4" TO 6") DEEP	13	50mm (2") BRONZE MIPT x MIPT CORPORATION STOP
7	TRACER WIRE (AS REQUIRED), SEE WP-01	14	SIZE x 50mm (2") SERVICE SADDLE
		15	WATER MAIN

Revision	By	Approved	Date
ORIGINAL		Kercheval	12/75
Add Metric		T. Stanton	03/03
Replaced W-03		J. Tomasulo	10/04

SAN DIEGO REGIONAL STANDARD DRAWING

50mm (2") MANUAL AIR VALVE

RECOMMENDED BY THE SAN DIEGO REGIONAL STANDARDS COMMITTEE

10/28/2004

Chairperson R.C.E. 19246 Date

DRAWING NUMBER WA-01

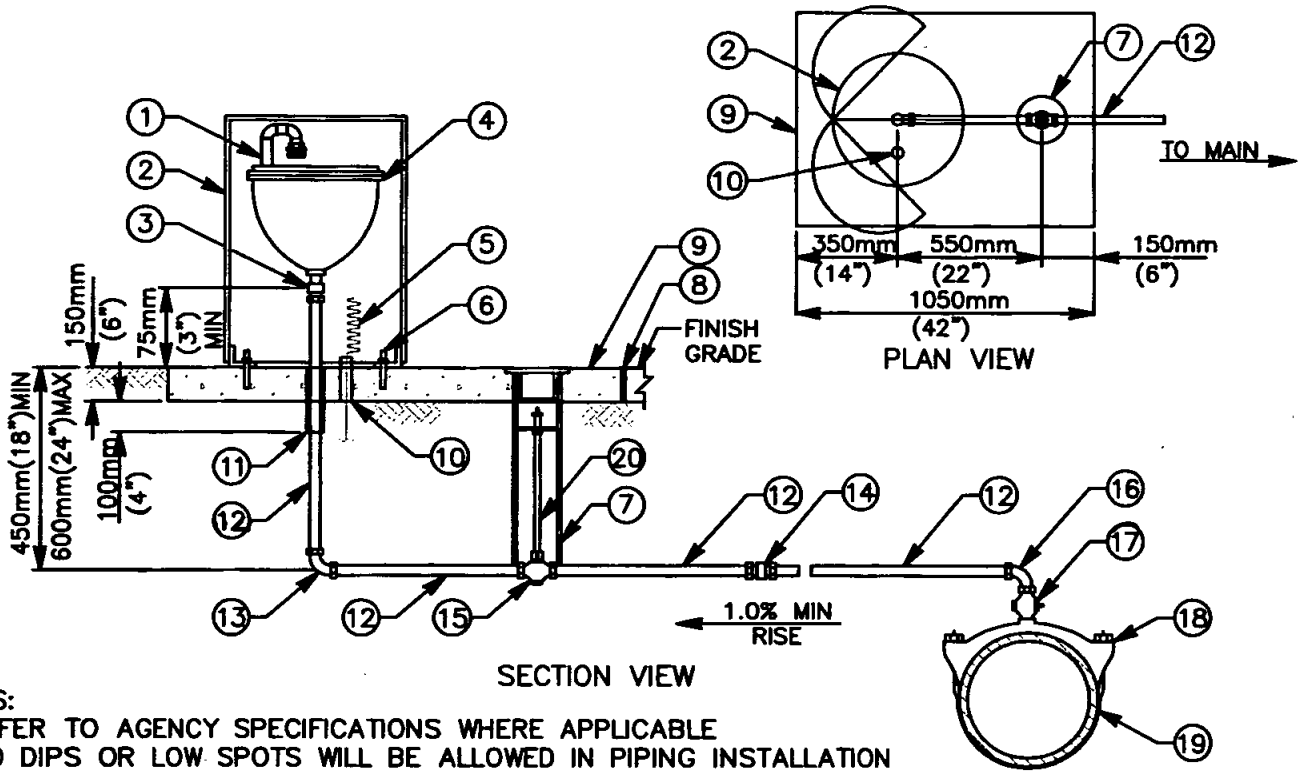

NOTES:
1) REFER TO AGENCY SPECIFICATIONS WHERE APPLICABLE
2) NO DIPS OR LOW SPOTS WILL BE ALLOWED IN PIPING INSTALLATION
3) LOCATE ENCLOSURE AS SHOWN ON WA-06
4) INSTALL WARNING/IDENTIFICATION TAPE AS SHOWN ON WP-01
5) AIR & VACUUM VALVES INSTALLED FOR THE USE OF RECYCLED WATER SHALL BE IDENTIFIED AS DESCRIBED IN AGENCY'S SPECIFICATIONS
6) ON STEEL MAINS USE WELD ON COUPLINGS, ON DUCTILE IRON MAINS USE DUCTILE IRON SERVICE SADDLES (INSULATING BUSHINGS ARE REQUIRED)
7) MATERIALS SHALL BE SELECTED FROM THE AGENCY'S APPROVED MATERIALS LIST

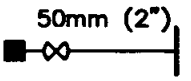

LEGEND ON PLANS

ITEM NO	SIZE AND DESCRIPTION	ITEM NO	SIZE AND DESCRIPTION
1	50mm (2") PVC SCH 80 CLOSE NIPPLE & 2-SCH 80 STREET ELLS & INSECT SCREEN	11	50mm (2") x 13mm (1/2") BLACK FOAM SLEEVE
2	VALVE ENCLOSURE	12	50mm (2") x REQUIRED LENGTH COPPER PIPE TYPE "K" RIGID OR SOFT
3	50mm (2") MIPT x COMPRESSION ADAPTER	13	50mm (2") 90° BRONZE COMPRESSION ELL
4	50mm (2") AUTOMATIC COMBINATION AIR RELEASE & AIR/VACUUM VALVE	14	50mm (2") BRONZE COMPRESSION COUPLING COPPER TO COPPER (IF REQUIRED)
5	TRACER WIRE (AS REQUIRED), SEE WP-01	15	50mm (2") COMP BALL VALVE W/ TEE HEAD
6	13mm x 75mm (1/2" x 3") STAINLESS STEEL DROP-IN ANCHORS (3 EA @ 120° APART)	16	50mm (2") 90° BRONZE FIPT x COMP ELL
7	100mm (4") SDR 35 SEWER PIPE GATE WELL WITH CAP	17	50mm (2") BRONZE MIPT x MIPT CORPORATION STOP
8	COLD JOINT STRIP	18	SIZE x 50mm (2") SERVICE SADDLE
9	1050mm x 750mm x 150mm THICK (3'-6" x 2'-6" x 6" THICK) CONCRETE SLAB	19	WATER MAIN
10	25mm (1") PVC CONDUIT FOR TRACER WIRE INSTALLED 50mm (2") ABOVE SLAB	20	VALVE STEM EXTENSION, SEE WV-05

Revision	By	Approved	Date
ORIGINAL		Kercheval	12/75
Add Metric		T. Stanton	03/03
Replaced W-04		J. Tomasulo	10/04

SAN DIEGO REGIONAL STANDARD DRAWING

50mm (2") AUTOMATIC COMBINATION AIR RELEASE & AIR/VACUUM VALVE INSTALLATIONS

RECOMMENDED BY THE SAN DIEGO REGIONAL STANDARDS COMMITTEE

10/28/2004

Chairperson R.C.E. 19246 - Date

DRAWING NUMBER WA-02

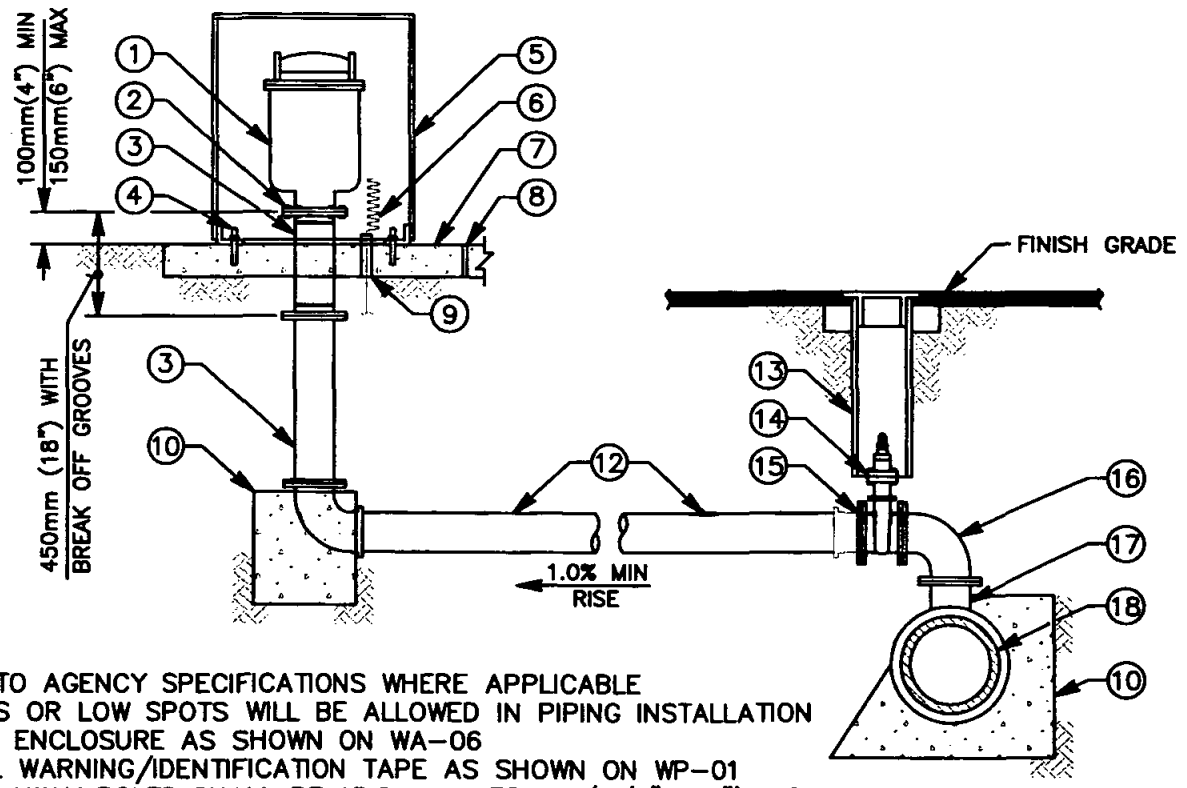

NOTES:
1) REFER TO AGENCY SPECIFICATIONS WHERE APPLICABLE
2) NO DIPS OR LOW SPOTS WILL BE ALLOWED IN PIPING INSTALLATION
3) LOCATE ENCLOSURE AS SHOWN ON WA-06
4) INSTALL WARNING/IDENTIFICATION TAPE AS SHOWN ON WP-01
5) BREAK-AWAY BOLTS SHALL BE 15.6mm x 75mm (5/8" x 3") WITH 9.4mm (3/8") HOLE DRILLED IN THE SHAFT OF THE BOLT. INSTALL WITH NUTS ON TOP OF THE FLANGE. BOLT SHAFT SHALL BE FILLED WITH SILICONE SEALANT
6) AIR & VACUUM VALVES INSTALLED FOR THE USE OF RECYCLED WATER SHALL BE IDENTIFIED AS DESCRIBED IN AGENCY'S SPECIFICATIONS
7) MATERIALS SHALL BE SELECTED FROM THE AGENCY'S APPROVED MATERIALS LIST

100mm (4")

150mm (6")

LEGEND ON PLANS

ITEM NO	SIZE AND DESCRIPTION	ITEM NO	SIZE AND DESCRIPTION
1	100mm (4") OR 150mm (6") AUTOMATIC COMBINATION AIR RELEASE & AIR/VACUUM VALVE ASSEMBLY	10	CONCRETE THRUST/ANCHOR BLOCK SEE WT-01
2	BREAK-AWAY BOLTS, SEE NOTE 5	11	100mm (4") OR 150mm (6") FLG x MJ/PO 90° BEND
3	100mm (4") OR 150mm (6") FLANGED 8-BOLT DUCTILE IRON PIPE x REQ'D LENGTH (MAX OF 2 SPOOLS)	12	100mm (4") OR 150mm (6") C-900 PVC PIPE
4	13mm x 75mm (5/8" x 3") STAINLESS STEEL DROP-IN ANCHORS (3 EA @ 120° APART)	13	GATE WELL WITH CAP SEE WV-01 OR WV-02
5	VALVE ENCLOSURE	14	100mm (4") OR 150mm (6") FLG x MJ/PO/FLG RWGV
6	TRACER WIRE (AS REQUIRED), SEE WP-01	15	100mm (4") OR 150mm (6") FLG x MJ/PO ADAPTER (IF REQUIRED)
7	1050mm x 1050mm x 150mm THICK (42" x 42" x 6" THICK) CONCRETE SLAB	16	100mm (4") OR 150mm (6") FLANGE 90° BEND
8	COLD JOINT STRIP	17	SIZE x 100mm (4") OR 150mm (6") MJ/PO/FLG x FLG TEE
9	25mm (1") PVC CONDUIT FOR TRACER WIRE INSTALLED 50mm (2") ABOVE SLAB	18	WATER MAIN

Revision	By	Approved	Date
ORIGINAL		Kercheval	12/75
Add Metric		T. Stanton	03/03
Replaced W-05		J. Tomasulo	10/04

SAN DIEGO REGIONAL STANDARD DRAWING

100mm (4") & 150mm (6") AUTOMATIC COMBINATION AIR RELEASE & AIR/VACUUM VALVE INSTALLATIONS

RECOMMENDED BY THE SAN DIEGO REGIONAL STANDARDS COMMITTEE

10/28/2004

Chairperson R.C.E. 19246 Date

DRAWING NUMBER WA-04

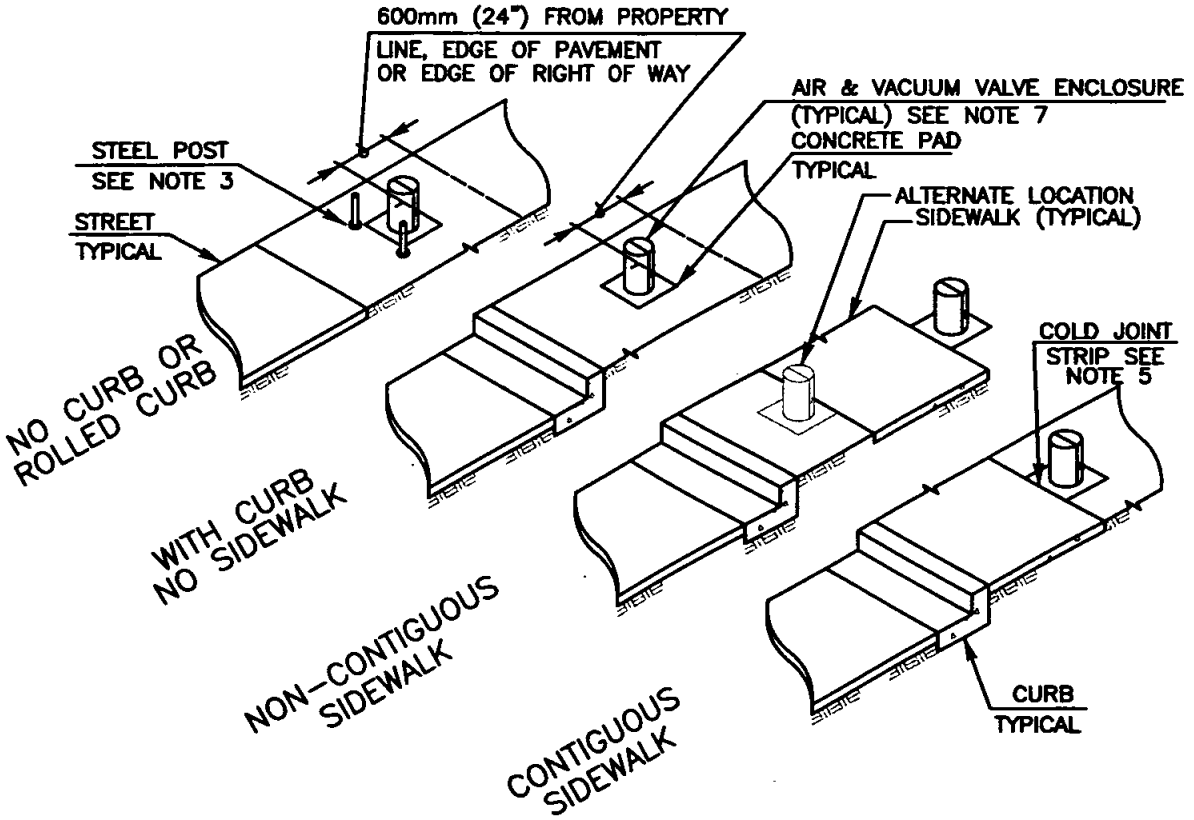

NOTES:
1) REFER TO AGENCY SPECIFICATIONS WHERE APPLICABLE
2) REFER TO WA-02 AND WA-04
3) PROTECTION POSTS SHALL BE INSTALLED AS CALLED FOR ON THE PLANS OR AS DIRECTED BY THE ENGINEER PER WM-04
4) AN EASEMENT MAY BE NEEDED DEPENDING ON LOCATION OF ENCLOSURE
5) IF THE CONCRETE SLAB IS TO BE INSTALLED ADJACENT TO A CONCRETE CURB OR SIDEWALK A COLD JOINT STRIP SHALL BE INSTALLED
6) AIR & VACUUM VALVES & APPURTENANCES INSTALLED FOR THE USE OF RECYCLED WATER SHALL BE IDENTIFIED AS DESCRIBED IN THE AGENCY'S SPECIFICATIONS
7) MATERIALS SHALL BE SELECTED FROM THE AGENCY'S APPROVED MATERIALS LIST

Revision	By	Approved	Date
ORIGINAL		Kercheval	12/75
Add Metric		T. Stanton	03/03
Replaced W-14		J. Tomasulo	10/04

SAN DIEGO REGIONAL STANDARD DRAWING

AIR & VACUUM VALVE ENCLOSURE LOCATIONS

RECOMMENDED BY THE SAN DIEGO REGIONAL STANDARDS COMMITTEE

10/28/2004

Chairperson R.C.E. 19246 Date

DRAWING NUMBER **WA-06**

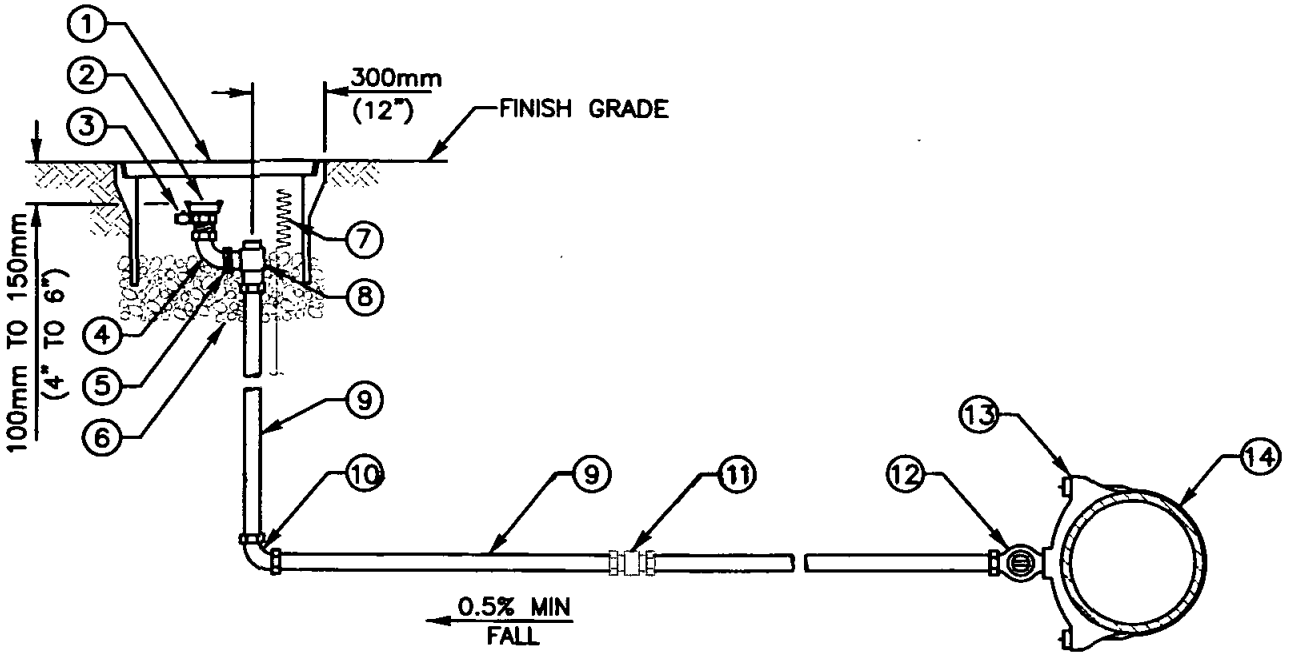

NOTES:
1) REFER TO AGENCY SPECIFICATIONS WHERE APPLICABLE
2) SET TOP OF METER BOX FLUSH WITH SIDEWALK, CURB OR FINISH GRADE
3) LOCATE METER BOX AS SHOWN ON WS-03
4) INSTALL WARNING/IDENTIFICATION TAPE AS SHOWN ON WP-01
5) FOR BLOW-OFF INSTALLATION AT END OF MAIN SEE WB-04
6) BLOW-OFF ASSEMBLIES INSTALLED FOR THE USE OF RECYCLED WATER SHALL BE IDENTIFIED AS DESCRIBED IN AGENCY'S SPECIFICATIONS
7) ON STEEL MAINS USE WELD ON COUPLINGS, ON DUCTILE IRON MAINS USE DUCTILE IRON SERVICE SADDLES (INSULATING BUSHINGS ARE REQUIRED)
8) CAM & GROOVE ADAPTER SHALL BE DRILLED AND TAPPED AS REQUIRED FOR THE PRESSURE PET COCK
9) MATERIALS SHALL BE SELECTED FROM THE AGENCY'S APPROVED MATERIALS LIST

50mm (2")

LEGEND ON PLANS

ITEM NO	SIZE AND DESCRIPTION	ITEM NO	SIZE AND DESCRIPTION
1	POLYMER METER BOX WITH LID 430mm x 760mm (17" x 30"), SEE NOTE 3	8	50mm (2") BRONZE COMP x FLG ANGLE METER STOP WITH LOCK WING
2	50mm (2") CAM & GROOVE ADAPTER x MIPT WITH LOCKING DUST CAP, SEE NOTE 8	9	50mm (2") x REQUIRED LENGTH COPPER PIPE TYPE "K" RIGID OR SOFT
3	6mm (1/4") PRESSURE PET COCK	10	50mm (2") 90° BRONZE COMPRESSION ELL
4	50mm (2") 90° BRONZE MIPT x FIPT ELL	11	50mm (2") BRONZE COMPRESSION COUPLING COPPER TO COPPER (IF REQUIRED)
5	50mm (2") OVAL METER FLANGE FLG x FIPT, WITH GASKET	12	50mm (2") BRONZE MIPT x COMP CORPORATION STOP
6	10mm (3/8") ROCK 100mm TO 150mm (4" TO 6") DEEP	13	SIZE x 50mm (2") SERVICE SADDLE
7	TRACER WIRE (AS REQUIRED), SEE WP-01	14	WATER MAIN

Revision	By	Approved	Date
ORIGINAL		Kercheval	12/75
Add Metric		T. Stanton	03/03
Replaced W-06		J. Tomasulo	10/04

SAN DIEGO REGIONAL STANDARD DRAWING

50mm (2") BLOW-OFF INSTALLATION

RECOMMENDED BY THE SAN DIEGO REGIONAL STANDARDS COMMITTEE

T. Stanton 10/28/2004

Chairperson R.C.E. 19246 Date

DRAWING NUMBER WB-01

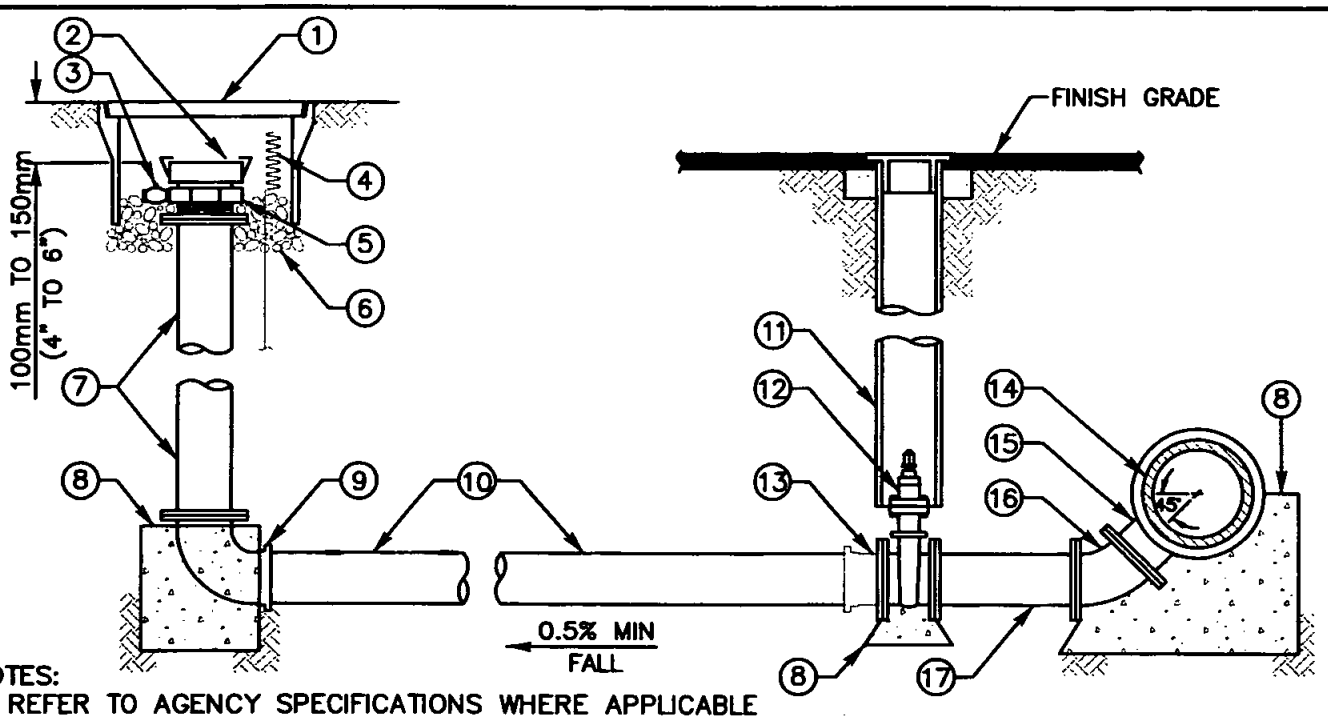

NOTES:

1) REFER TO AGENCY SPECIFICATIONS WHERE APPLICABLE
2) SET TOP OF METER BOX FLUSH WITH SIDEWALK, CURB OR FINISH GRADE
3) LOCATE METER BOX AS SHOWN ON WS-03
4) INSTALL WARNING/IDENTIFICATION TAPE AS SHOWN ON WP-01
5) FOR BLOW-OFF INSTALLATION AT END OF MAIN SEE WB-04
6) BLOW-OFF ASSEMBLIES INSTALLED FOR THE USE OF RECYCLED WATER SHALL BE IDENTIFIED AS DESCRIBED IN AGENCY'S SPECIFICATIONS
7) 45° BEND SHALL BE USED FOR MAINS UP TO 750mm (30"). 90° BEND SHALL BE USED FOR MAINS IN EXCESS OF 750mm (30") AS DIRECTED BY THE ENGINEER
8) CAM & GROOVE ADAPTER SHALL BE DRILLED AND TAPPED AS REQUIRED FOR THE PRESSURE PET COCK
9) MATERIALS SHALL BE SELECTED FROM THE AGENCY'S APPROVED MATERIALS LIST

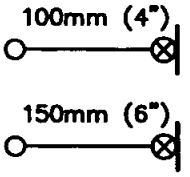

LEGEND ON PLANS

ITEM NO	SIZE AND DESCRIPTION	ITEM NO	SIZE AND DESCRIPTION
1	POLYMER METER BOX WITH LID 430mm x 760mm (17" x 30"), SEE NOTE 3	9	100mm (4") OR 150mm (6") FLG x MJ/PO 90° BEND
2	100mm (4") OR 150mm (6") CAM & GROOVE ADAPTER x MIPT WITH LOCKING DUST CAP, SEE NOTE 8	10	100mm (4") OR 150mm (6") C-900 PVC PIPE
3	6mm (1/4") PRESSURE PET COCK	11	GATE WELL WITH CAP SEE WV-01 OR WV-02
4	TRACER WIRE (AS REQUIRED), SEE WP-01	12	100mm (4") OR 150mm (6") FLG x MJ/PO/FLG RWGV
5	100mm (4") OR 150mm (6") FLANGED COMPANION x FIPT	13	100mm (4") OR 150mm (6") FLG x MJ/PO ADAPTER (IF REQUIRED)
6	10mm (3/8") ROCK 100mm TO 150mm (4" TO 6") DEEP	14	WATER MAIN
7	100mm (4") OR 150mm (6") FLG DI PIPE x REQUIRED LENGTH (MAXIMUM OF 2 SPOOLS)	15	SIZE x 100mm (4") OR 150mm (6") MJ/PO/FLG x FLG TEE
8	CONCRETE THRUST BLOCK SEE WT-01	16	100mm (4") OR 150mm (6") FLANGED 45° BEND
		17	100mm (4") OR 150mm (6") x 600mm (24") FLG DI SPOOL

Revision	By	Approved	Date
ORIGINAL		Kercheval	12/75
Add Metric		T. Stanton	03/03
Replaced W-08		J. Tomasulo	10/04

SAN DIEGO REGIONAL STANDARD DRAWING

100mm (4") & 150mm (6") BLOW-OFF INSTALLATION TYPE A

RECOMMENDED BY THE SAN DIEGO REGIONAL STANDARDS COMMITTEE

T. Stanton 10/28/2004

Chairperson R.C.E. 19246 Date

DRAWING NUMBER **WB-02**

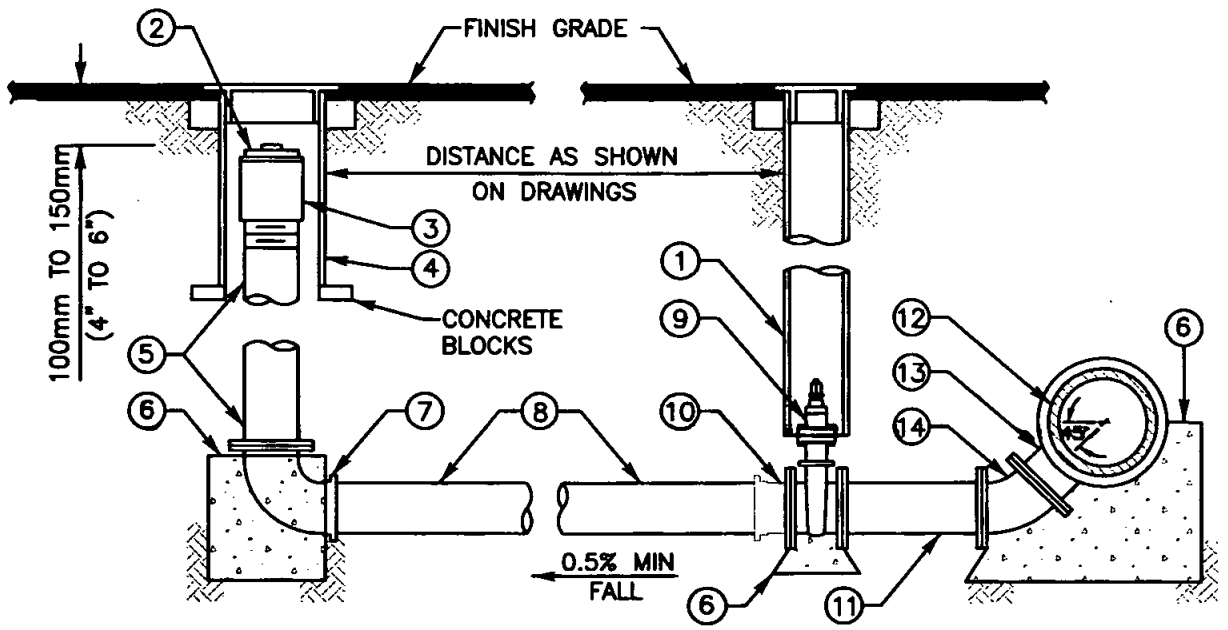

NOTES:
1) REFER TO AGENCY SPECIFICATIONS WHERE APPLICABLE
2) FOR BLOW-OFF INSTALLATION AT END OF MAIN SEE WB-04
3) BLOW-OFF ASSEMBLIES INSTALLED FOR THE USE OF RECYCLED WATER SHALL BE IDENTIFIED AS DESCRIBED IN AGENCY'S SPECIFICATIONS
4) ON STEEL MAINS USE WELD ON COUPLINGS, ON DUCTILE IRON MAINS USE DUCTILE IRON SERVICE SADDLES (INSULATING BUSHINGS ARE REQUIRED)
5) 45° BEND SHALL BE USED FOR MAINS UP TO 750mm (30"). 90° BEND SHALL BE USED FOR MAINS IN EXCESS OF 750mm (30") AS DIRECTED BY THE ENGINEER
6) MATERIALS SHALL BE SELECTED FROM THE AGENCY'S APPROVED MATERIALS LIST

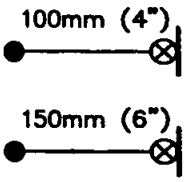

LEGEND ON PLANS

ITEM NO	SIZE AND DESCRIPTION	ITEM NO	SIZE AND DESCRIPTION
1	GATE WELL WITH CAP SEE WV-01 OR WV-02	8	100mm (4") OR 150mm (6") C-900 PVC PIPE
2	GALVANIZED IRON PLUG	9	100mm (4") OR 150mm (6") FLG x MJ/PO/FLG RWGV
3	GALVANIZED IRON COUPLING, THREADED	10	100mm (4") OR 150mm (6") FLG x MJ/PO ADAPTER (IF REQUIRED)
4	250mm (10") STEEL GATE WELL WITH CAP	11	100mm (4") OR 150mm (6") x 600mm (24") FLG DI SPOOL
5	100mm (4") OR 150mm (6") FLG DI PIPE x REQUIRED LENGTH (MAXIMUM OF 2 SPOOLS)	12	WATER MAIN
6	CONCRETE THRUST BLOCK SEE WT-01	13	SIZE x 100mm (4") OR 150mm (6") MJ/PO/FLG x FLG TEE
7	100mm (4") OR 150mm (6") FLG x MJ/PO 90° BEND	14	100mm (4") OR 150mm (6") FLANGED 45° BEND, SEE NOTE 5

Revision	By	Approved	Date
ORIGINAL		Kerchevol	12/75
Add Metric		T. Stanton	03/03
Replaced W-09		J. Tomasulo	10/04

SAN DIEGO REGIONAL STANDARD DRAWING

100mm (4") & 150mm (6") BLOW-OFF ASSEMBLIES IN STREET TYPE B

RECOMMENDED BY THE SAN DIEGO REGIONAL STANDARDS COMMITTEE

10/28/2004

Chairperson R.C.E. 19246 Date

DRAWING NUMBER WB-03

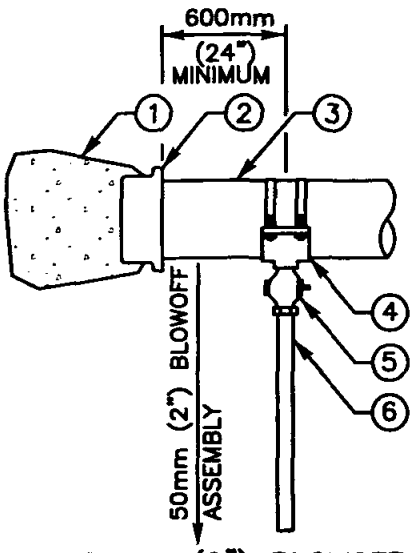

50mm (2") BLOWOFF
FROM END OF MAIN
(PLAN VIEW)

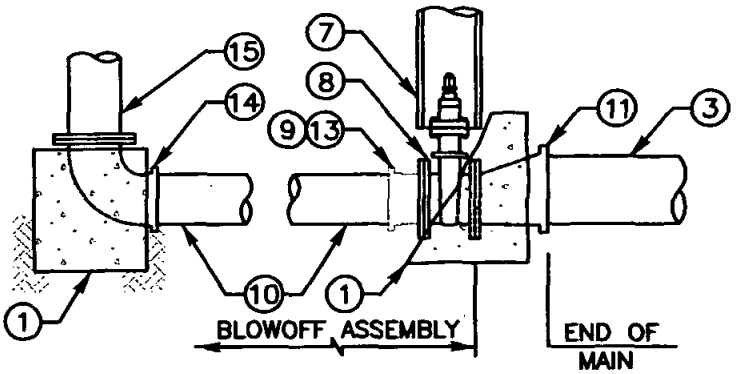

100mm & 150mm (4" & 6")
BLOWOFF FROM END OF MAIN
(PROFILE VIEW)

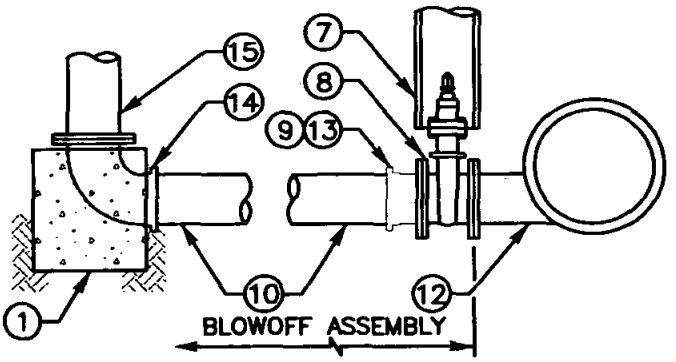

100mm & 150mm (4" & 6")
BLOWOFF FROM STEEL MAIN
(PROFILE VIEW)

NOTES:
1) REFER TO AGENCY SPECIFICATIONS WHERE APPLICABLE
2) BLOW-OFF ASSEMBLIES INSTALLED FOR THE USE OF RECYCLED WATER SHALL BE IDENTIFIED AS DESCRIBED IN AGENCY'S SPECIFICATIONS
3) FOR 2" BLOW-OFFS ON STEEL MAINS USE WELD ON COUPLINGS, ON DUCTILE IRON MAINS USE DUCTILE IRON SERVICE SADDLES (INSULATING BUSHINGS ARE REQUIRED)
4) MATERIALS SHALL BE SELECTED FROM THE AGENCY'S APPROVED MATERIALS LIST

ITEM NO	SIZE AND DESCRIPTION	ITEM NO	SIZE AND DESCRIPTION
1	CONCRETE THRUST BLOCKS SEE WT-01	8	FLG x MJ/PO/FLG RWGV
2	DI END CAP	9	FLG x MJ/PO ADAPTER (IF REQUIRED)
3	WATER MAIN	10	C-900 PVC PIPE
4	SIZE x 50mm (2") SERVICE SADDLE	11	FLG x MJ/PO ECCENTRIC DI REDUCER
5	50mm (2") BRONZE MIPT x COMP CORPORATION STOP	12	MAIN SIZE x BLOWOFF SIZE FLANGE MANUFACTURED STEEL TANGENTIAL OUTLET
6	50mm (2") x REQ'D LENGTH COPPER PIPE TYPE "K" RIGID OR SOFT	13	FLG x MJ/PO BEND (IF REQUIRED)
7	GATE WELL WITH CAP SEE WV-01 & WV-02	14	FLG x MJ/PO 90° BEND
		15	FLG DI PIPE x REQUIRED LENGTH (MAXIMUM OF 2 SPOOLS)

Revision	By	Approved	Date
ORIGINAL		Kercheval	12/75
Add Metric		T. Stanton	03/03
Replaced W-07		J. Tomasulo	10/04

SAN DIEGO REGIONAL STANDARD DRAWING

BLOW-OFF INSTALLATION FROM END OF MAINS AND FROM STEEL MAINS

RECOMMENDED BY THE SAN DIEGO REGIONAL STANDARDS COMMITTEE

10/28/2004

Chairperson R.C.E. 19246 Date

DRAWING NUMBER WB-04

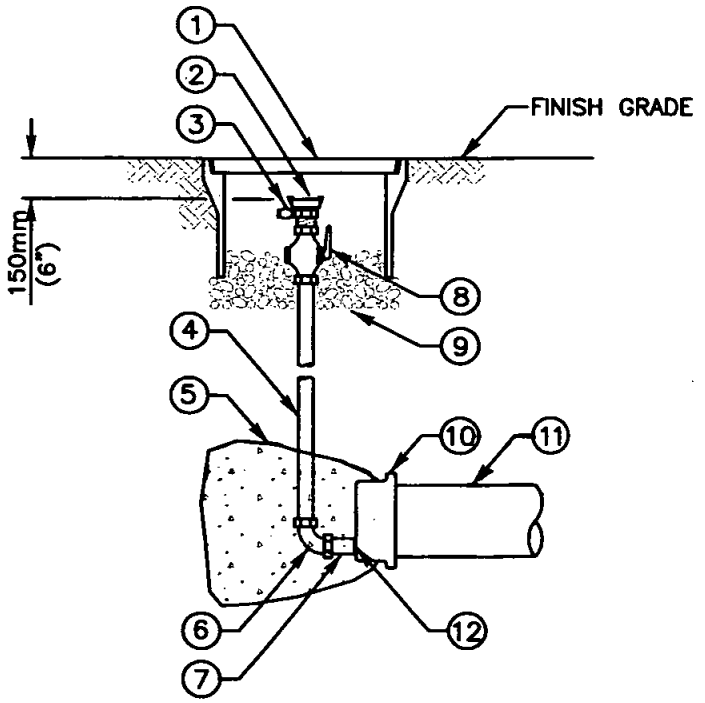

NOTES:
1) REFER TO AGENCY SPECIFICATIONS WHERE APPLICABLE
2) SET TOP OF METER BOX 50mm (2") ABOVE FINISH GRADE
3) BLOW-OFF ASSEMBLIES INSTALLED FOR THE USE OF RECYCLED WATER SHALL BE IDENTIFIED AS DESCRIBED IN AGENCY'S SPECIFICATIONS
4) THE CONSTRUCTION OF A TEMPORARY BLOW-OFF FOR THE USE OF TESTING AND FLUSHING OF NEW MAINS ONLY
5) CAM & GROOVE ADAPTER SHALL BE DRILLED AND TAPPED AS REQUIRED FOR THE PRESSURE PET COCK
6) MATERIALS SHALL BE SELECTED FROM THE AGENCY'S APPROVED MATERIALS LIST

TEMP 50mm (2")

LEGEND ON PLANS

ITEM NO	SIZE AND DESCRIPTION	ITEM NO	SIZE AND DESCRIPTION
1	POLYMER METER BOX WITH LID 430mm x 760mm (17" x 30")	6	50mm (2") 90° BRONZE IRON PIPE THREAD BY COMPRESSION ELL
2	50mm (2") CAM & GROOVE ADAPTER x MIPT WITH LOCKING DUST CAP, SEE NOTE 5	7	50mm (2") CLOSE NIPPLE IPT
3	6mm (1/4") PRESSURE PET COCK	8	50mm (2") COMPRESSION x FIPT BALL VALVE WITH HANDLE
4	50mm (2") x REQUIRED LENGTH COPPER PIPE TYPE "K" RIGID OR SOFT	9	10mm (3/8") ROCK 150mm (6") DEEP
5	CONCRETE THRUST BLOCK SEE WT-01	10	DI END CAP WITH 63mm (2.5") FIPT OUTLET
		11	WATER MAIN
		12	NYLON DIELECTRIC BUSHING

Revision	By	Approved	Date
ORIGINAL		Kercheval	12/75
Add Metric		T. Stanton	03/03
Replaced W-07		J. Tomasulo	10/04

SAN DIEGO REGIONAL STANDARD DRAWING

TEMPORARY 50mm (2") BLOW-OFF INSTALLATION

RECOMMENDED BY THE SAN DIEGO REGIONAL STANDARDS COMMITTEE

10/28/2004

Chairperson R.C.E. 19246 Date

DRAWING NUMBER WB-05

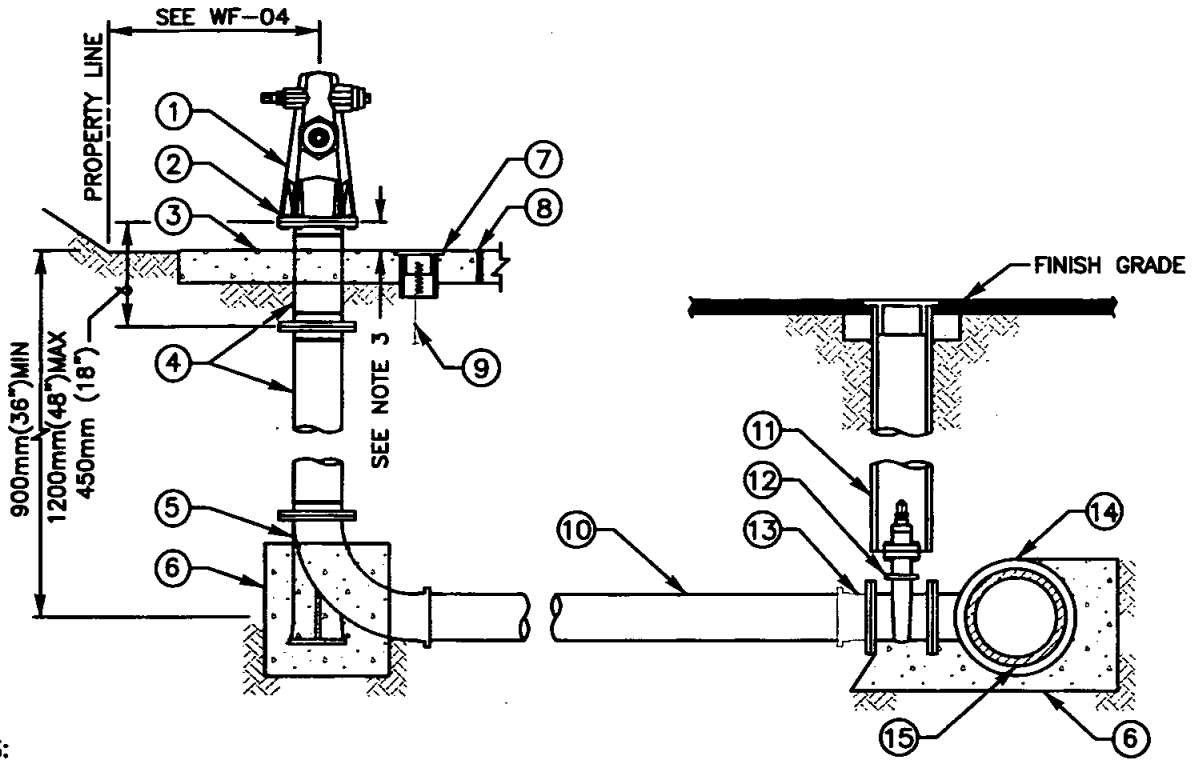

NOTES:

1) REFER TO AGENCY SPECIFICATIONS WHERE APPLICABLE
2) THE NUMBER OF OUTLETS SHALL BE AS SHOWN ON PLANS
3) FIRE HYDRANT FLANGE SHALL BE 150mm ± 25mm (6" ± 1") ABOVE TOP OF CURB OR SPLASH PAD SEE PLANS FOR ELEVATION
4) LOCATE FIRE HYDRANT AS SHOWN ON WF-04
5) INSTALL WARNING/IDENTIFICATION TAPE AS SHOWN ON WP-01
6) FIRE HYDRANT FLANGE BOLTS SHALL BE BREAK AWAY BOLTS INSTALLED WITH NUTS ON TOP OF THE FLANGE. BOLT SHAFT SHALL BE FILLED WITH SILICONE SEALANT
7) CONNECTIONS TO STEEL MAINS WILL BE MADE IN ACCORDANCE WITH AGENCY'S SPECIFICATIONS
8) MATERIALS SHALL BE SELECTED FROM THE AGENCY'S APPROVED MATERIALS LIST

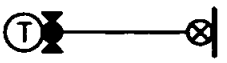

LEGEND ON PLANS

ITEM NO	SIZE AND DESCRIPTION	ITEM NO	SIZE AND DESCRIPTION
1	150mm (6") FIRE HYDRANT SEE NOTE 2	8	COLD JOINT STRIP
2	BREAK-AWAY BOLTS, SEE NOTE 6	9	TRACER WIRE (AS REQUIRED) PER WP-01
3	1200mm x 1200mm x 150mm THICK (4' x 4' x 6" THICK) CONCRETE SPLASH PAD	10	150mm (6") C-900 PVC PIPE
4	150mm (6") FLANGE DI HYDRANT EXTENSION SPOOL(S) WITH BREAK OFF GROOVES (MAXIMUM OF 2 SPOOLS)	11	GATE WELL WITH CAP SEE WV-01 OR WV-02
5	150mm x 400mm (6" x 16") LONG RADIUS FLG x MJ/PO BURY ELL	12	150mm (6") FLG x MJ/PO/FLG RWGV
6	CONCRETE THRUST BLOCK SEE WT-01	13	150mm (6") FLG x MJ/PO ADAPTER (IF REQUIRED)
7	TRACER WIRE ACCESS PORT, 100mm (4") x 200mm 8" LONG SDR 35 SEWER PIPE W/ CAP (AS-REQUIRED)	14	SIZE x 150mm (6") MJ/PO/FLG x FLG TEE
		15	WATER MAIN

Revision	By	Approved	Date
ORIGINAL		Kercheval	12/75
Add Metric		T. Stanton	03/03
Replaced W-10		J. Tomasulo	10/04

SAN DIEGO REGIONAL STANDARD DRAWING

150mm (6") FIRE HYDRANT INSTALLATION

RECOMMENDED BY THE SAN DIEGO REGIONAL STANDARDS COMMITTEE

T. Stanton 10/28/2004

Chairperson R.C.E. 19246 Date

DRAWING NUMBER **WF-01**

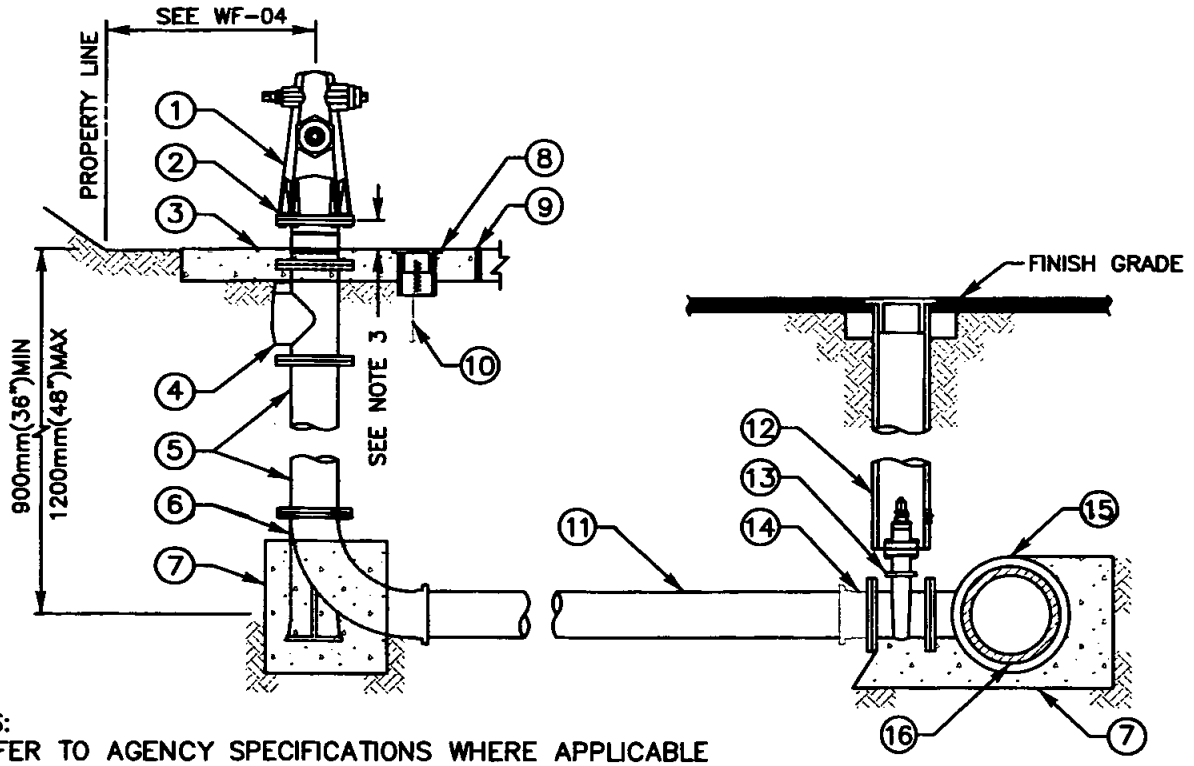

NOTES:
1) REFER TO AGENCY SPECIFICATIONS WHERE APPLICABLE
2) THE NUMBER OF OUTLETS SHALL BE AS SHOWN ON PLANS
3) TOP FLANGE OF BREAK-OFF CHECK VALVE SHALL BE SET WITHIN THE CONCRETE PAD. BREAK OFF GROOVE, MINIMUM OF ONE, SHALL BE PLACED ABOVE THE PAD
4) LOCATE FIRE HYDRANT AS SHOWN ON WF-04
5) INSTALL WARNING/IDENTIFICATION TAPE AS SHOWN ON WP-01
6) FIRE HYDRANT FLANGE BOLTS SHALL BE A307 ZINC-PLATED BOLTS INSTALLED WITH NUTS ON TOP OF THE FLANGE. BREAK AWAY BOLTS SHALL NOT BE USED
7) CONNECTIONS TO STEEL MAINS WILL BE MADE IN ACCORDANCE WITH AGENCY'S SPECIFICATIONS
8) MATERIALS SHALL BE SELECTED FROM THE AGENCY'S APPROVED MATERIALS LIST

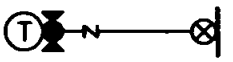

LEGEND ON PLANS

ITEM NO	SIZE AND DESCRIPTION	ITEM NO	SIZE AND DESCRIPTION
1	150mm (6") FIRE HYDRANT SEE NOTE 2	9	COLD JOINT STRIP
2	BOLTS, SEE NOTE 6	10	TRACER WIRE (AS REQUIRED) PER WP-01
3	1200mm x 1200mm x 200mm THICK (4' x 4' x 8" THICK) CONCRETE SPLASH PAD	11	150mm (6") C-900 PVC PIPE
4	150mm (6") BREAK-OFF CHECK VALVE	12	GATE WELL WITH CAP SEE WV-01 OR WV-02
5	150mm (6") FLANGE DI SPOOL(S) (MAXIMUM OF 2 SPOOLS) NO GROOVES	13	150mm (6") FLG x MJ/PO/FLG RWGV
6	150mm x 400mm (6" x 16") LONG RADIUS FLG x MJ/PO BURY ELL	14	150mm (6") FLG x MJ/PO ADAPTER (IF REQUIRED)
7	CONCRETE THRUST BLOCK SEE WT-01	15	SIZE x 150mm (6") MJ/PO/FLG x FLG TEE
8	TRACER WIRE ACCESS PORT, 100mm (4") x 200mm 8" LONG SDR 35 SEWER PIPE W/ CAP (AS-REQUIRED)	16	WATER MAIN

Revision	By	Approved	Date
ORIGINAL		Kercheval	12/75
Add Metric		T. Stanton	03/03
Replaced W-10		J. Tomasulo	10/04

SAN DIEGO REGIONAL STANDARD DRAWING

150mm (6") FIRE HYDRANT INSTALLATION WITH BREAK-OFF CHECK VALVE

RECOMMENDED BY THE SAN DIEGO REGIONAL STANDARDS COMMITTEE

10/28/2004

Chairperson R.C.E. 19246 Date

DRAWING NUMBER WF-02

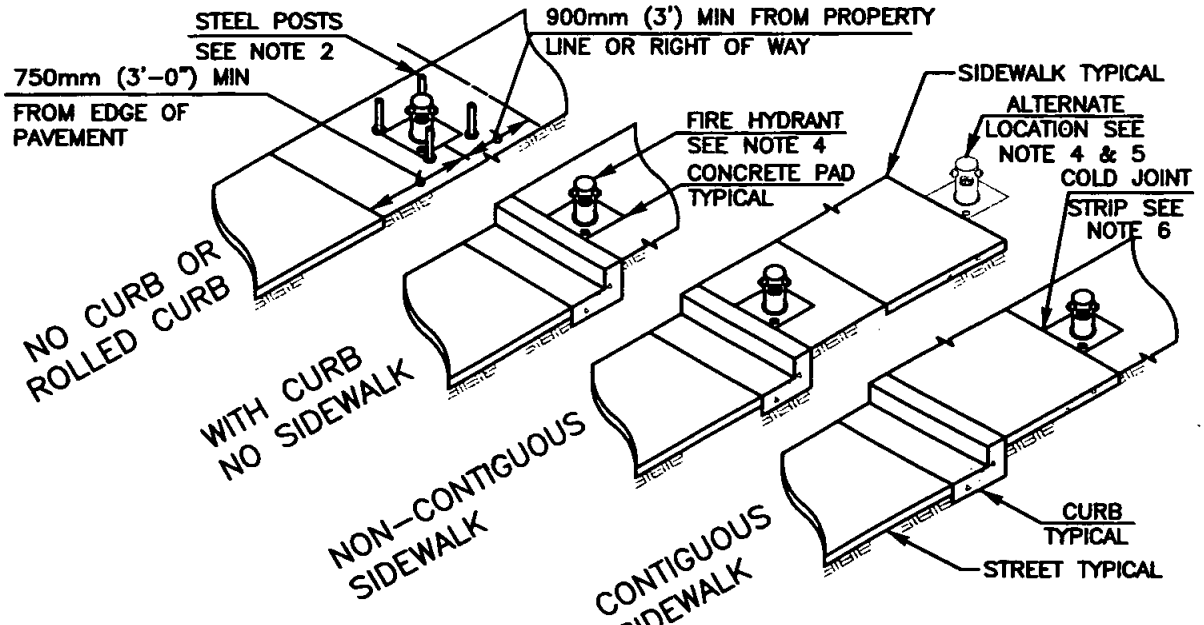

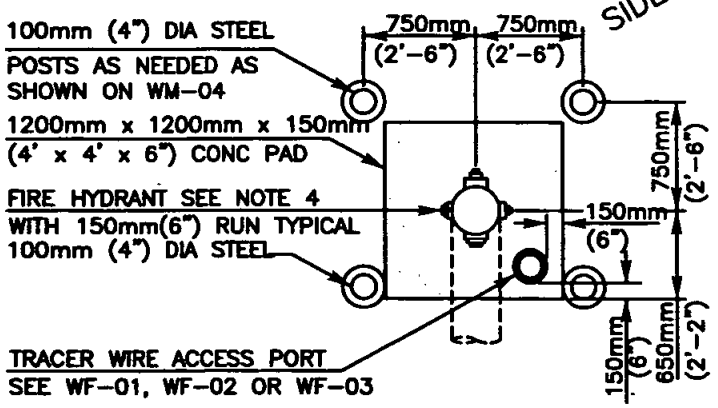

PROTECTION POST LOCATIONS

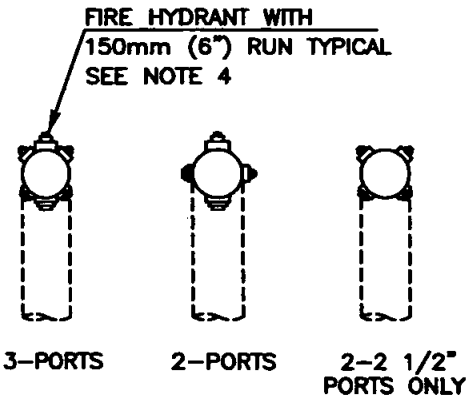

PORT ORIENTATION

NOTES:

1) REFER TO AGENCY SPECIFICATIONS WHERE APPLICABLE
2) PROTECTION POSTS SHALL BE INSTALLED AS CALLED FOR ON THE PLANS OR AS DIRECTED BY THE ENGINEER PER WM-04
3) LOCATE FIRE HYDRANT AS SHOWN ABOVE OR AS DIRECTED BY THE ENGINEER
4) FIRE HYDRANTS SHALL BE INSTALLED WITH THE LARGEST PORT PERPENDICULAR TO THE STREET
5) AN EASEMENT MAY BE NEEDED DEPENDING ON LOCATION OF FIRE HYDRANT
6) IF THE CONCRETE SLAB IS TO BE INSTALLED ADJACENT TO A CONCRETE CURB OR SIDEWALK A COLD JOINT STRIP SHALL BE INSTALLED
7) MATERIALS SHALL BE SELECTED FROM THE AGENCY'S APPROVED MATERIALS LIST

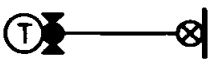

LEGEND ON PLANS

Revision	By	Approved	Date
ORIGINAL		Kercheval	12/75
Add Metric		T. Stanton	03/03
Replaced W-11		J. Tomasulo	10/04

SAN DIEGO REGIONAL STANDARD DRAWING

FIRE HYDRANT LOCATIONS AND PORT ORIENTATION

RECOMMENDED BY THE SAN DIEGO REGIONAL STANDARDS COMMITTEE

10/28/2004

Chairperson R.C.E. 19246 Date

DRAWING NUMBER WF-04

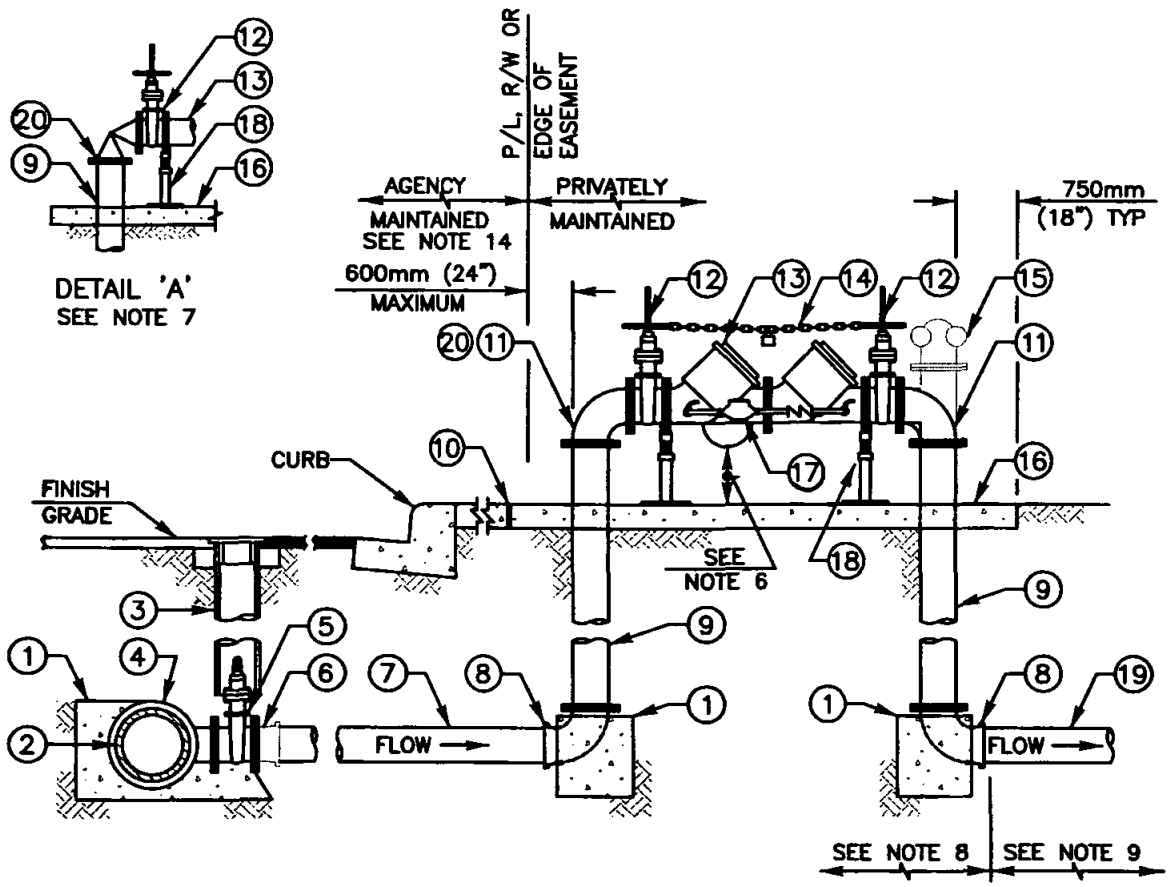

FOR NOTES REGARDING THE INSTALLATION OF FIRE SERVICES SEE WF-05 SHEET 2 OF 2

RP FS

LEGEND ON PLANS

ITEM NO	SIZE AND DESCRIPTION	ITEM NO	SIZE AND DESCRIPTION
1	CONCRETE THRUST BLOCK SEE WT-01	13	RPDA UNLESS OTHERWISE SPECIFIED BY AGENCY OF JURISDICTION SEE NOTE 4
2	WATER MAIN	14	CHAIN WITH KNOX LOCK SEE NOTE 4
3	GATE WELL WITH CAP SEE WV-01 OR WV-02	15	FLANGED TEE WITH "FDC" SEE NOTE 4
4	SIZE x SIZE MJ/PO/FLG x FLG TEE	16	CONCRETE SLAB AS REQUIRED BY AGENCY OF JURISDICTION. MINIMUM 100mm (4") THICK x 900mm (36") WIDE x AS REQUIRED
5	FLG x MJ/PO/FLG RWGV	17	19mm (3/4") BYPASS, METER & RP DEVICE
6	FLG x MJ/PO ADAPTER (IF REQUIRED)	18	ADJUSTABLE VALVE SUPPORT
7	C-900 PVC PIPE	19	PVC OR DI PIPE SEE NOTE 9
8	MJ/PO x FLG 90° BEND	20	FLANGED ANGLE PRESSURE REDUCING VALVE SEE NOTE 7
9	FLANGED DUCTILE IRON PIPE		
10	COLD JOINT STRIP		
11	FLANGED 90° BEND, SEE NOTE 7		
12	FLANGED OS&Y RWGV WITH HAND WHEEL		

Revision	By	Approved	Date
ORIGINAL		Kercheval	12/75
Add Metric		T. Stanton	03/03
Replaced W-26		J. Tomasulo	10/04

SAN DIEGO REGIONAL STANDARD DRAWING

100mm (4") AND LARGER FIRE SERVICE INSTALLATION

RECOMMENDED BY THE SAN DIEGO REGIONAL STANDARDS COMMITTEE

10/28/2004

Chairperson R.C.E. 19246 Date

DRAWING NUMBER WF-05 (1 OF 2)

NOTES:

1) REFER TO AGENCY SPECIFICATIONS WHERE APPLICABLE
2) INSTALL WARNING/IDENTIFICATION TAPE AS SHOWN ON WP-01
3) LOCATION OF FIRE SERVICES SHALL BE AS DIRECTED BY THE FIRE DEPARTMENT OF JURISDICTION. FIRE SERVICES SHOULD BE LOCATED IN SUCH A MANNER THAT WILL ALLOW THE DEVICE TO BE READILY ACCESSIBLE FOR INSPECTION, REPAIR, AND USAGE
4) TAMPER SWITCH, AUTOMATIC RESET, CHAIN WITH KNOX LOCK, AND FIRE DEPARTMENT CONNECTION ("FDC") SHALL BE AS REQUIRED BY THE FIRE DEPARTMENT OF JURISDICTION
5) BALL VALVE TEST COCKS SHALL BE PROVIDED AND LOCATED PER THE MANUFACTURES RECOMMENDATIONS AND THE REQUIREMENTS OF THE WATER AGENCY STANDARDS
6) INSTALL FIRE SERVICES SO THAT THE DISTANCE BETWEEN THE BOTTOM OF THE RELIEF DIAPHRAM AND THE CONCRETE SLAB OR FINISH GRADE IS 300mm (12") MINIMUM AND 600mm (24") MAXIMUM
7) INSTALL AN ANGLE PRESSURE REDUCING VALVE IN LIEU OF THE FIRST 90° BEND WHEN SYSTEM STATIC PRESSURE EXCEEDS 1.03 MPa (150 PSI) OR WHEN RECOMMENDED BY THE BACKFLOW MANUFACTURER
8) INSTALL PIPE AND RELATED APPURTENANCES IN THIS AREA PER THE REQUIREMENTS OF THE WATER AGENCY STANDARDS
9) INSTALL PIPE AND RELATED APPURTENENCES IN THIS AREA AS REQUIRED BY THE FIRE DEPARTMENT OF JURISDICTION
10) ABOVE GROUND APPURTENANCES SHALL BE PAINTED AND IDENTIFIED AS CALLED FOR BY THE FIRE DEPARTMENT OF JURISDICTION
11) TESTING SHALL BE CONDUCTED AS CALLED FOR IN AGENCY'S SPECIFICATIONS PRIOR TO ACCEPTANCE BY THE DISTRICT
12) CONNECTIONS TO STEEL MAINS SHALL BE IN ACCORDANCE WITH AGENCY'S SPECIFICATIONS
13) MATERIALS SHALL BE SELECTED FROM THE AGENCY'S APPROVED MATERIALS LIST
14) AGENCY RESPOSIBILITY ENDS AT EDGE OF PROPERTY LINE, RIGHT OF WAY, OR EASEMENT.

FOR DETAILS REGARDING THE INSTALLATION OF FIRE SERVICES SEE WF-05 SHEET 1 OF 2

RP FS

LEGEND ON PLANS

Revision	By	Approved	Date
ORIGINAL		Kercheval	12/75
Add Metric		T. Stanton	03/03
Replaced W-26		J. Tomasulo	10/04

SAN DIEGO REGIONAL STANDARD DRAWING

100mm (4") AND LARGER FIRE SERVICE INSTALLATION NOTES

RECOMMENDED BY THE SAN DIEGO REGIONAL STANDARDS COMMITTEE

T. Stanton 10/28/2004

Chairperson R.C.E. 19246 Date

DRAWING NUMBER WF-05 (2 OF 2)

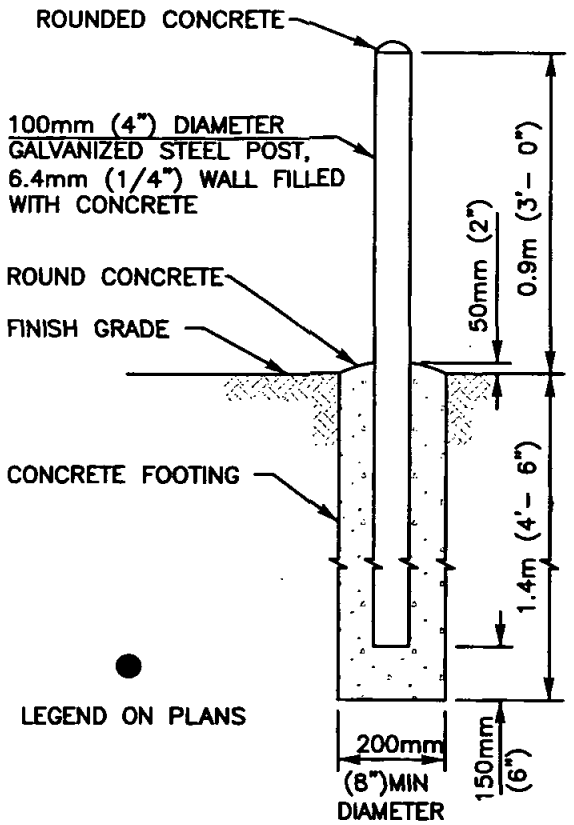

PROTECTION POST
TYPE "A"

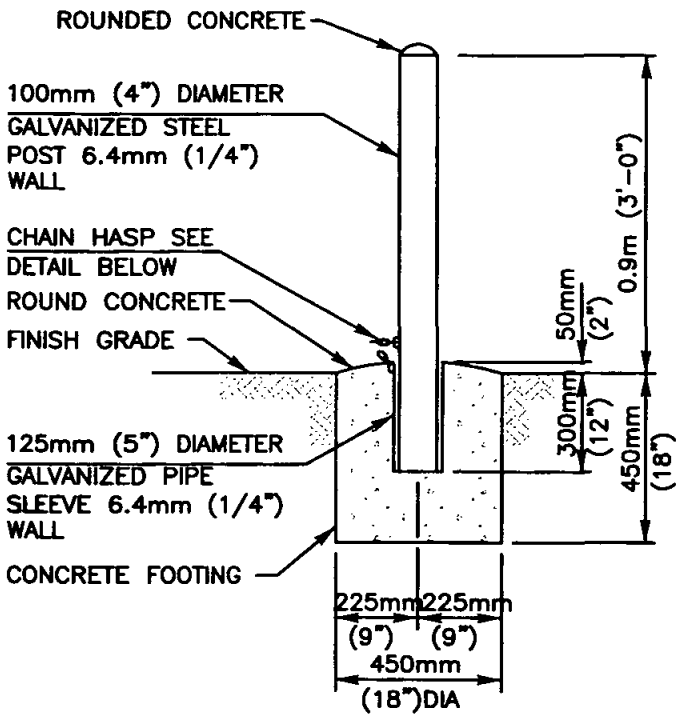

DEMOUNTABLE PROTECTION POST
TYPE "B"

LEGEND ON PLANS

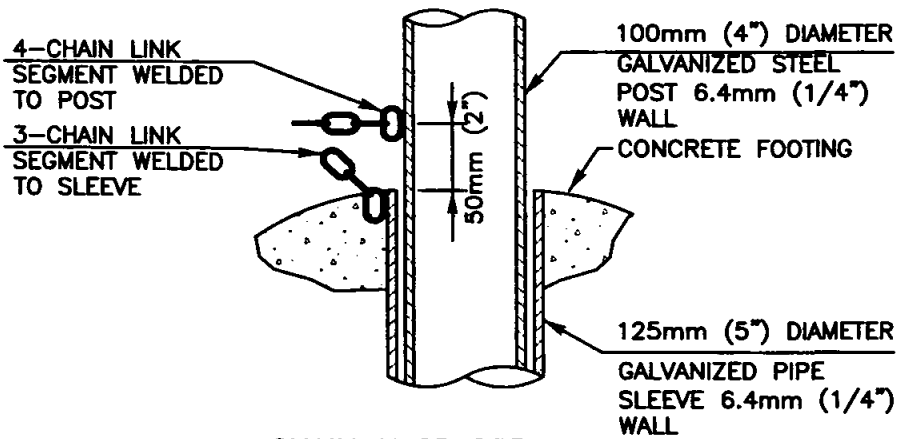

CHAIN HASP DETAIL

NOTES:

1) TYPE "A" AND TYPE "B" PROTECTION POSTS SHALL BE INSTALLED WHERE INDICATED ON THE APPROVED PLANS OR AS DIRECTED BY THE ENGINEER. SDG&E REQUIREMENTS DICTATE IN AREAS OF SDG&E EQUIPMENT
2) CHAIN TO BE 6.4mm (1/4") PROOF COIL CHAIN GALVANIZED STEEL. WELD 4-LINK SEGMENT TO POST AND 3-LINK SEGMENT TO SLEEVE
3) TYPE "A" AND TYPE "B" PROTECTION POSTS SHALL BE COATED USING SAFETY YELLOW IN ACCORDANCE WITH AGENCY'S STANDARDS

Revision	By	Approved	Date
ORIGINAL		Kercheval	12/75
Add Metric		T. Stanton	03/03
Replaced W-16		J. Tomasulo	10/04

SAN DIEGO REGIONAL STANDARD DRAWING

PROTECTION POST INSTALLATION

RECOMMENDED BY THE SAN DIEGO REGIONAL STANDARDS COMMITTEE

T. Stanton 10/28/2004

Chairperson R.C.E. 19246 Date

DRAWING NUMBER WM-04

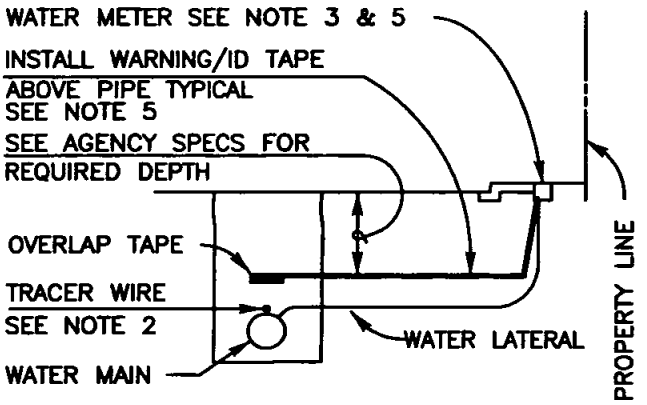

SECTION AT WATER LATERALS

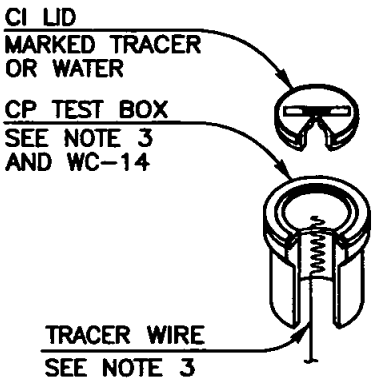

TRACER WIRE ACCESS PORT (CP BOX)
DETAIL

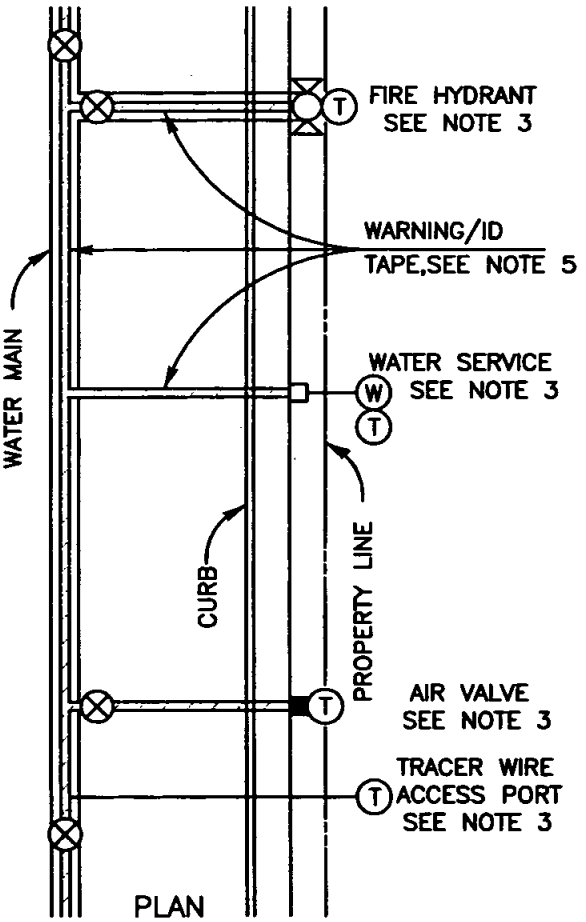

PLAN

NOTES:

1) REFER TO AGENCY SPECIFICATIONS WHERE APPLICABLE
2) WHERE SPECIFIED, TRACER WIRE AND OR WARNING ID TAPE, TO RUN CONTINUOUSLY ALONG THE ENTIRE LENGTH OF WATER MAINS. WIRE SHALL BE SECURED TO THE PIPE AND MAINTAINED ON PIPE CENTERLINE DURING TRENCH BACKFILL
3) TRACER WIRE ACCESS PORTS SHALL BE INSTALLED WITHIN THE CONCRETE SPLASH PAD OF ALL FIRE HYDRANTS IN ACCORDANCE WITH THE STANDARD DRAWINGS. TRACER WIRE MAY TERMINATE WITHIN METER BOX, BLOWOFF BOX OR AIR VALVE PER AGENCY'S SPECIFICATIONS. TRACER WIRE MAY TERMINATE IN A CP TEST BOX ONLY IF NO OTHER APPURTENANCE EXISTS WITHIN THE REQUIRED 305m (1,000') INTERVAL. ALL BURIED WIRES THAT REQUIRE TRENCHING TO A TEST BOX LOCATION SHALL BE INSTALLED, WITHOUT SPLICE, IN A CONDUIT IN THE TRENCH AT A MINIMUM DEPTH OF 600mm (24")
4) WIRE SPLICE CONNECTORS SHALL BE SILICONE FILLED TYPE
5) WARNING/IDENTIFICATION TAPE SHALL BE INSTALLED ABOVE THE PIPE AS SPECIFIED AND RUN CONTINUOUSLY ALONG THE ENTIRE LENGTH OF THE PIPE AND ALL RELATED APPURTENANCES
6) FOR PIPE BEDDING AND TRENCH BACKFILL SEE WP-02
7) MATERIALS SHALL BE SELECTED FROM THE AGENCY'S APPROVED MATERIALS LIST

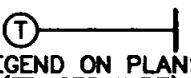

LEGEND ON PLANS
(TRACER WIRE)

Revision	By	Approved	Date
ORIGINAL		Kercheval	12/75
Add Metric		T. Stanton	03/03
Replaced W-25		J. Tomasulo	10/04

SAN DIEGO REGIONAL STANDARD DRAWING

WARNING/IDENTIFICATION TAPE AND TRACER WIRE INSTALLATIONS

RECOMMENDED BY THE SAN DIEGO REGIONAL STANDARDS COMMITTEE

10/28/2004

Chairperson R.C.E. 19246 Date

DRAWING NUMBER **WP-01**

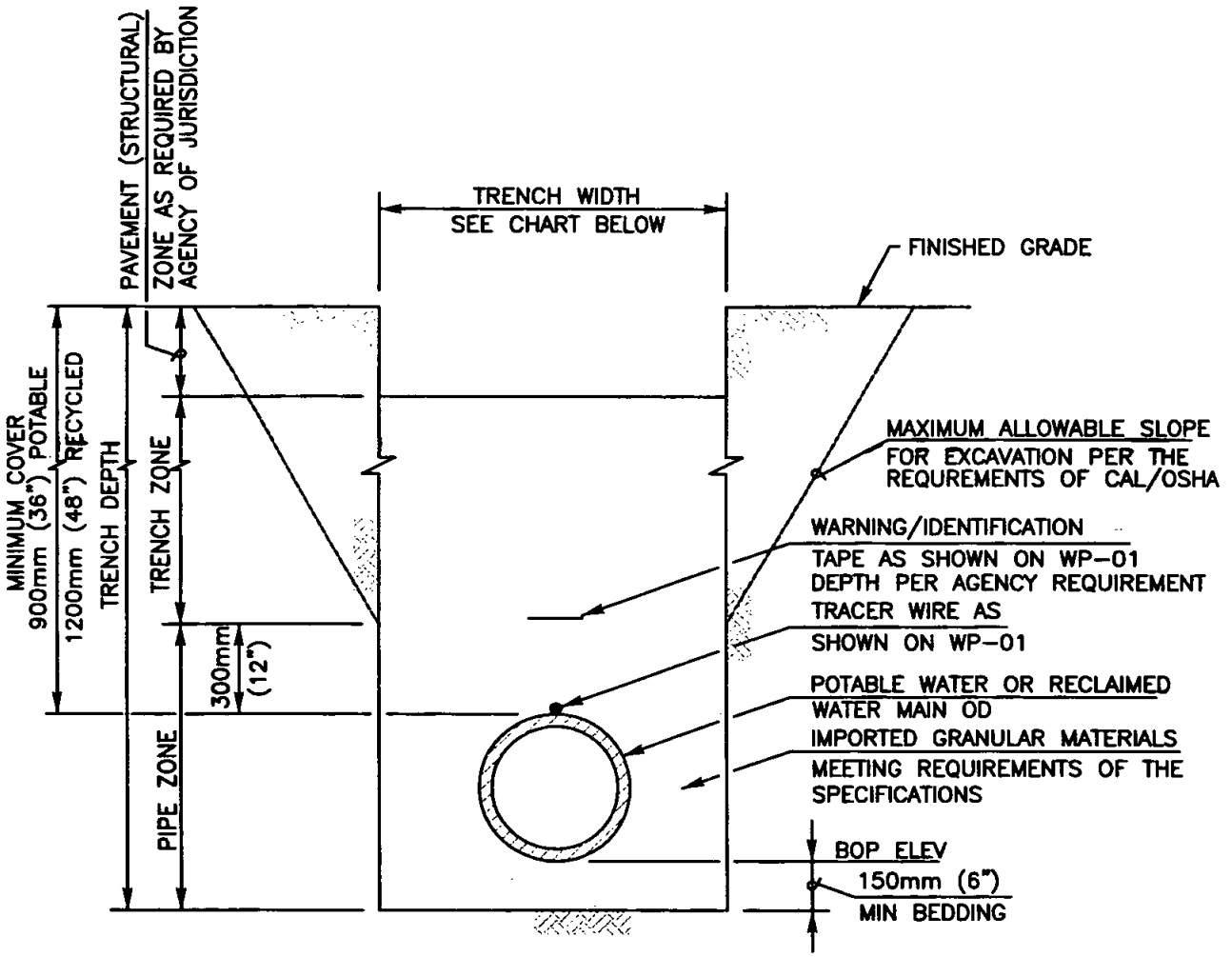

TRENCH SECTION

NOTES:
1) REFER TO AGENCY SPECIFICATIONS WHERE APPLICABLE
2) PAVING OR PAVEMENT REPAIR TO BE DONE IN ACCORDANCE TO CITY OR COUNTY STANDARDS
3) EXCAVATE BELL HOLES AT EACH PIPE JOINT TO PERMIT PROPER ASSEMBLY AND INSPECTION OF THE ENTIRE JOINT
4) ALL PIPELINE TRENCHES SHALL BE EXCAVATED SO THAT THE DISTANCE BETWEEN TRENCH WALLS AT THE TOP OF PIPE SHALL BE AS SHOWN BELOW:

TRENCH WIDTH

NOMINAL PIPE INSIDE DIAMETER	MINIMUM DISTANCE	MAXIMUM DISTANCE
100mm (4") & SMALLER	450mm (18")	700mm (28")
150mm & 200mm (6" & 8")	600mm (24")	800mm (32")
250mm & 300mm (10" & 12")	700mm (28")	900mm (36")
400mm THRU 900mm (16" THRU 36")	OD PLUS 600mm(24")	OD PLUS 900mm(36")

Revision	By	Approved	Date
ORIGINAL		Kercheval	12/75
Add Metric		T. Stanton	03/03
Replaced W-21		J. Tomasulo	10/04

SAN DIEGO REGIONAL STANDARD DRAWING

PIPE BEDDING AND TRENCH BACKFILL FOR POTABLE AND RECYCLED WATER MAINS

RECOMMENDED BY THE SAN DIEGO REGIONAL STANDARDS COMMITTEE

T. Stanton 10/28/2004

Chairperson R.C.E. 19246 Date

DRAWING NUMBER WP-02

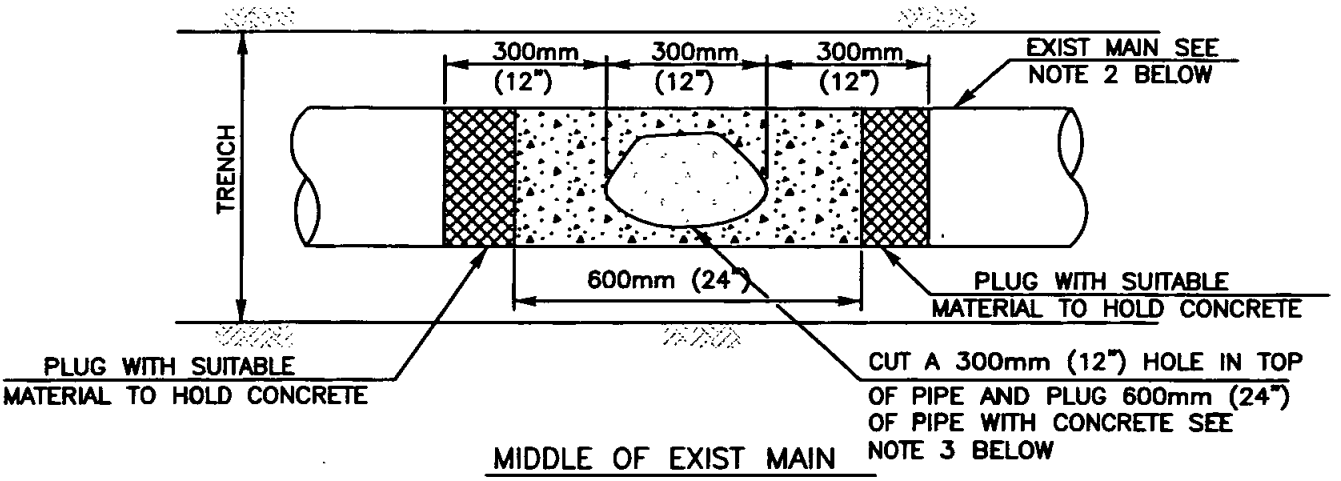

MIDDLE OF EXIST MAIN

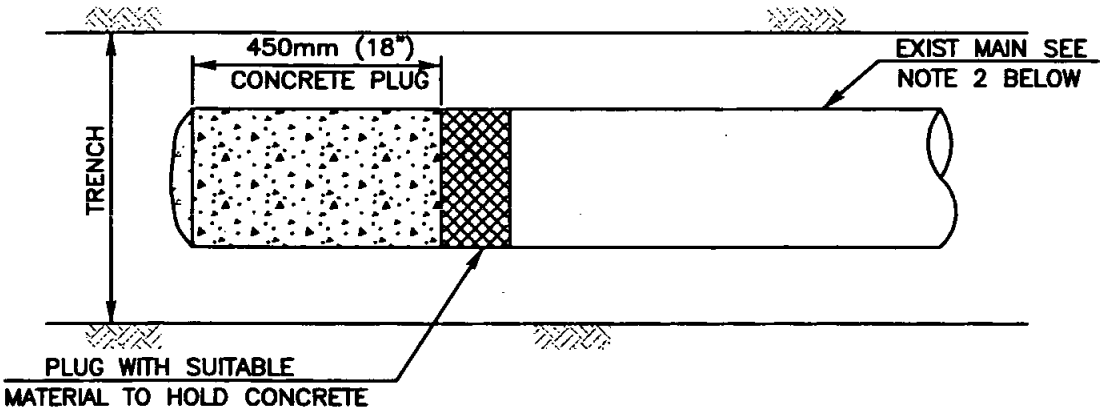

END OF EXIST MAIN

NOTES:
1) REFER TO AGENCY SPECIFICATIONS WHERE APPLICABLE
2) WATER AND RECYCLED WATER MAINS AND SEWER LATERALS 100mm (4") DIAMETER AND SMALLER SHALL HAVE A SHORT SECTION OF PIPE REMOVED AND PIPE ENDS ENCASED IN CONCRETE
3) EXISTING MAIN TO BE PLUGGED WITH CONCRETE OR PRESSURE GROUTED AT INTERVALS OF ABOUT 61m (200') OR AS DIRECTED BY THE ENGINEER
4) EXISTING MAINS 400mm (16") AND LARGER REQUIRE THE ENTIRE LENGTH OF THE PIPE TO BE FILLED BY PRESSURE GROUTING OR BY BLOWN SAND
5) EXISTING VALVES SHALL BE TURNED TO THE CLOSED POSITION. REMOVE GATE WELL AND REPLACE WITH COMPACTED BACKFILL
6) FOR ABANDONMENT OF MANHOLES SEE SM-08
7) PRIOR AGENCY APPROVAL REQUIRED FOR CUTTING AND PLUGGING

Revision	By	Approved	Date	SAN DIEGO REGIONAL STANDARD DRAWING	RECOMMENDED BY THE SAN DIEGO REGIONAL STANDARDS COMMITTEE
ORIGINAL		J. Tomasulo	10/04		10/28/2004
				CUTTING AND PLUGGING ABANDONED WATER, RECYCLED WATER AND SEWER MAINS	Chairperson R.C.E. 19246 Date
					DRAWING NUMBER WP-03

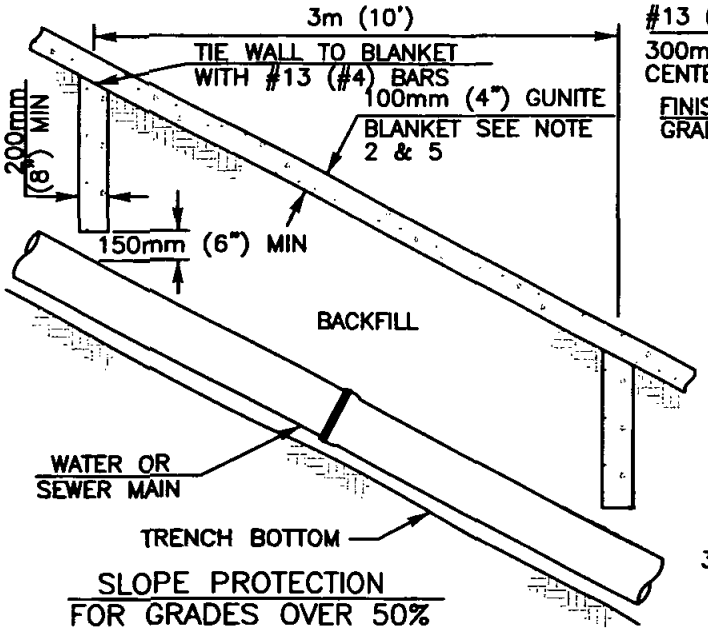

SLOPE PROTECTION
FOR GRADES OVER 50%

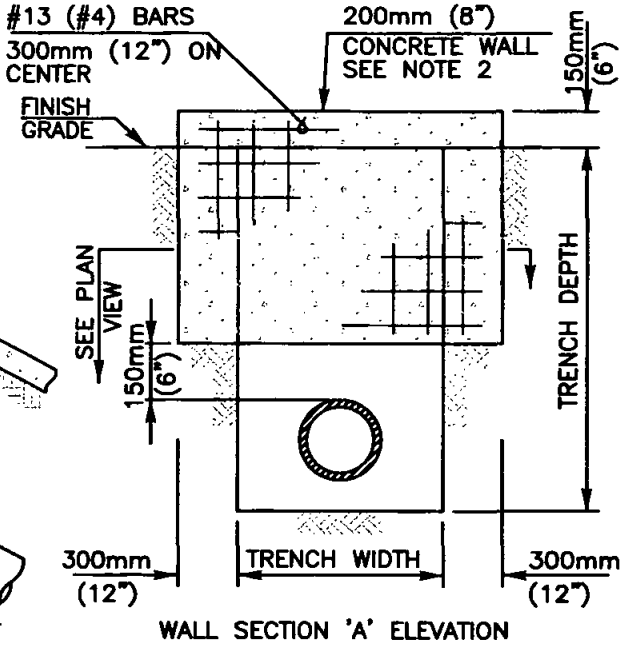

WALL SECTION 'A' ELEVATION

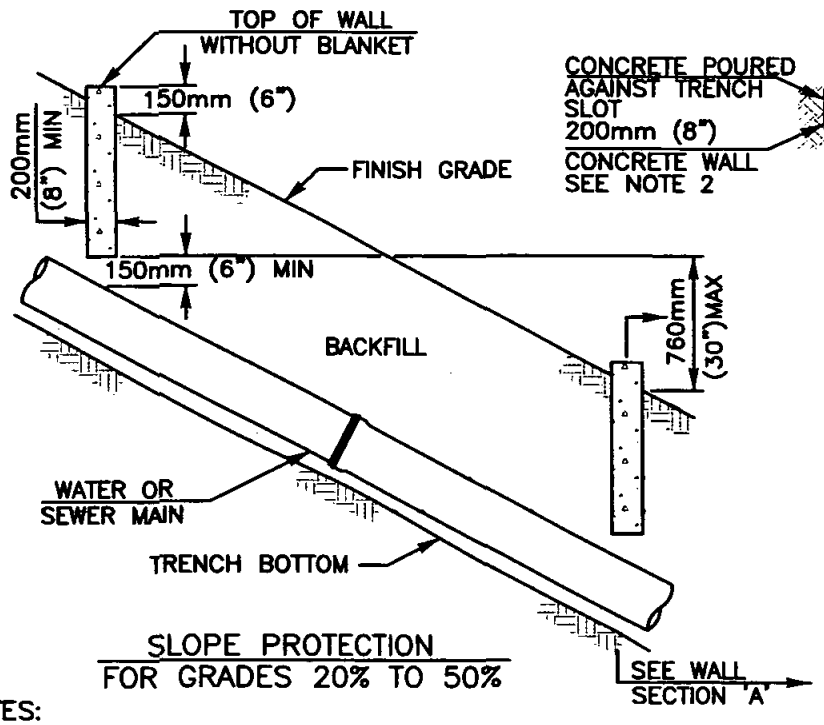

SLOPE PROTECTION
FOR GRADES 20% TO 50%

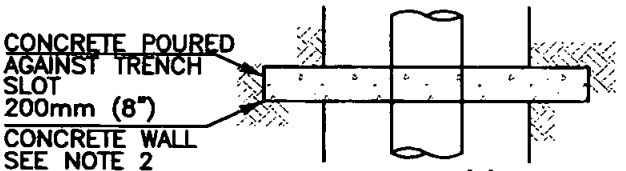

WALL SECTION 'A' PLAN

NOTES:

1) REFER TO AGENCY SPECIFICATIONS WHERE APPLICABLE
2) THE DETAILS SHOWN REPRESENT THE MINIMUM REQUIRED. THE ENGINEER OF WORK IS REQUIRED TO PROVIDE A SUBMITTAL TO THE AGENCY OF JURISDICTION FOR REVIEW AND APPROVAL BY THE AGENCY'S ENGINEER PRIOR TO INSTALLATION
3) WALLS SHALL BE REINFORCED CONCRETE OR 200mm x 200mm x 400mm (8" x 8" x 16") CONCRETE BLOCK, REINFORCED AND ALL CORES FILLED WITH GROUT SEE SPECIFICATIONS
4) FOR GRADES OVER 50%, SLOPE PROTECTION SHALL ALSO INCLUDE AC PAVING, CONCRETE SLAB OR GUNITE BLANKET PLACED OVER THE PIPELINE ALIGNMENT
5) 100mm (4") GUNITE BLANKET WITH 150mm (6") SQUARE x 10 GAGE WIRE FABRIC AT THE ENGINEERS DISCRETION

LEGEND ON PLANS

Revision	By	Approved	Date
ORIGINAL		J. Tomasulo	10/04

SAN DIEGO REGIONAL STANDARD DRAWING

SLOPE PROTECTION INSTALLATIONS

RECOMMENDED BY THE SAN DIEGO REGIONAL STANDARDS COMMITTEE

10/28/2004

Chairperson R.C.E. 19246 Date

DRAWING NUMBER WP-05

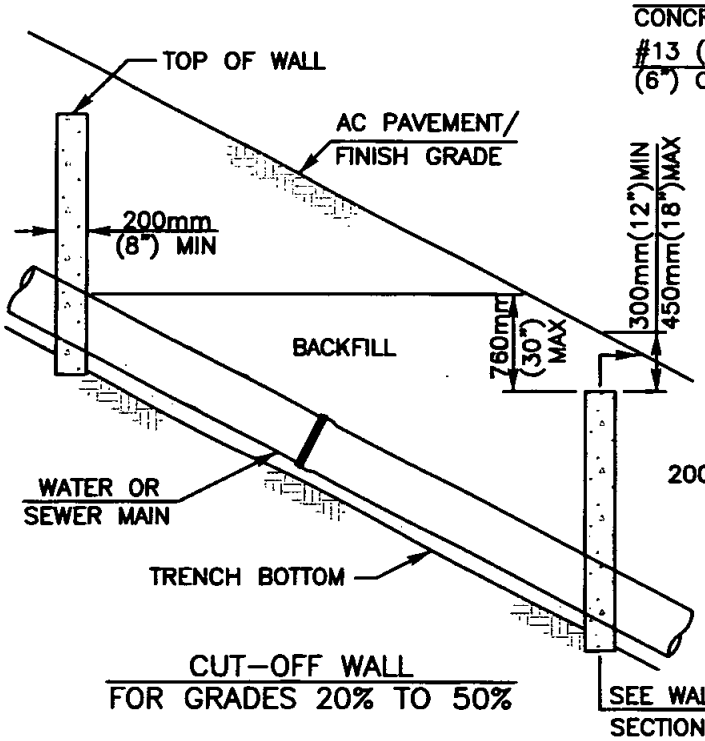

CUT-OFF WALL
FOR GRADES 20% TO 50%

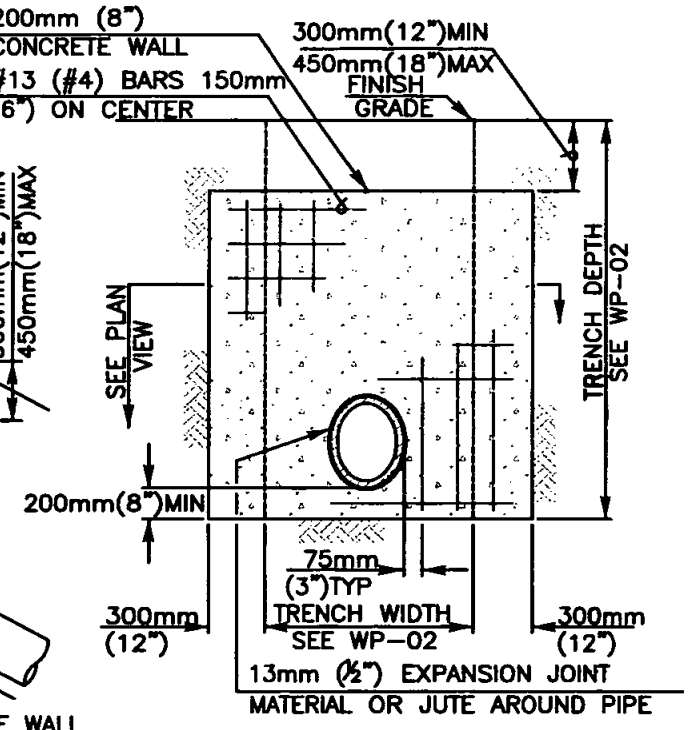

WALL SECTION 'A' ELEVATION

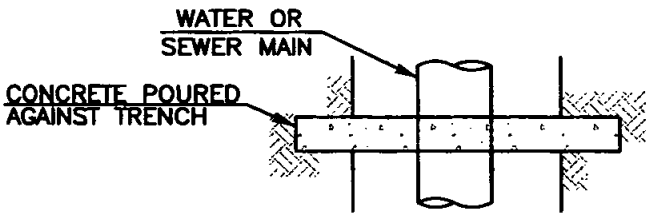

WALL SECTION 'A' PLAN

NOTES:
1) REFER TO AGENCY SPECIFICATIONS WHERE APPLICABLE
2) FOR USE AS TRENCH BACKFILL STABILIZATION IN TRAVELED AREAS
3) THE DETAILS SHOWN REPRESENT THE MINIMUM REQUIRED. THE ENGINEER OF WORK IS REQUIRED TO PROVIDE A SUBMITTAL TO THE AGENCY OF JURISDICTION FOR REVIEW AND APPROVAL BY THE AGENCY'S ENGINEER PRIOR TO INSTALLATION
4) WALLS SHALL BE REINFORCED CONCRETE OR 200mm x 200mm x 400mm (8" x 8" x 16") CONCRETE BLOCK, REINFORCED AND ALL CORES FILLED WITH GROUT SEE SPECIFICATIONS
5) FOR GRADES OVER 50% SEE WP-05/SP-05

LEGEND ON PLANS

Revision	By	Approved	Date
ORIGINAL		J. Tomasulo	10/04

SAN DIEGO REGIONAL STANDARD DRAWING

CUT-OFF WALL INSTALLATION IN TRAVELED AREAS

RECOMMENDED BY THE SAN DIEGO REGIONAL STANDARDS COMMITTEE

10/28/2004

Chairperson R.C.E. 19246 Date

DRAWING NUMBER WP-07

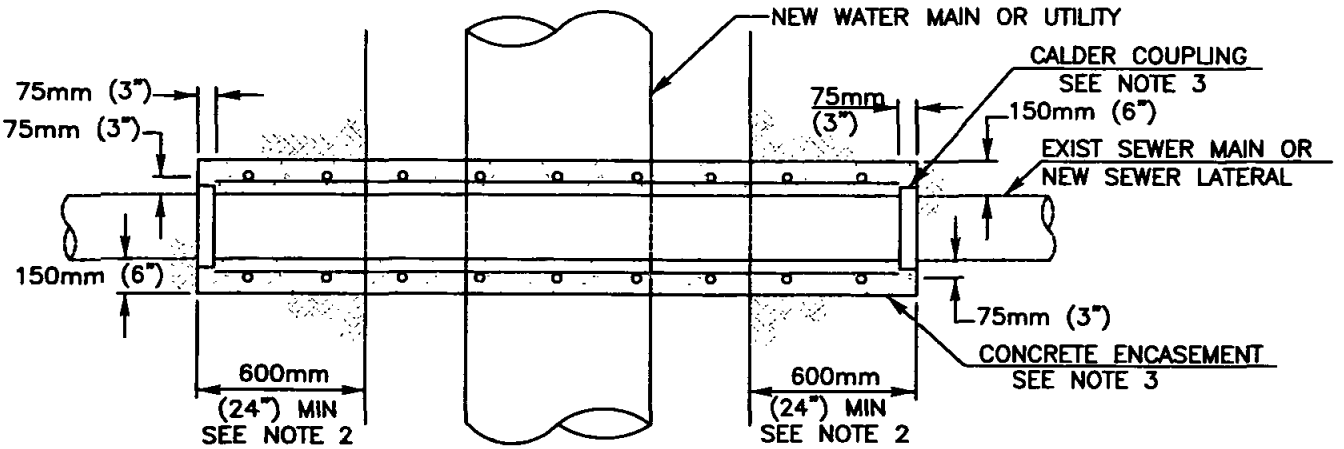

PLAN

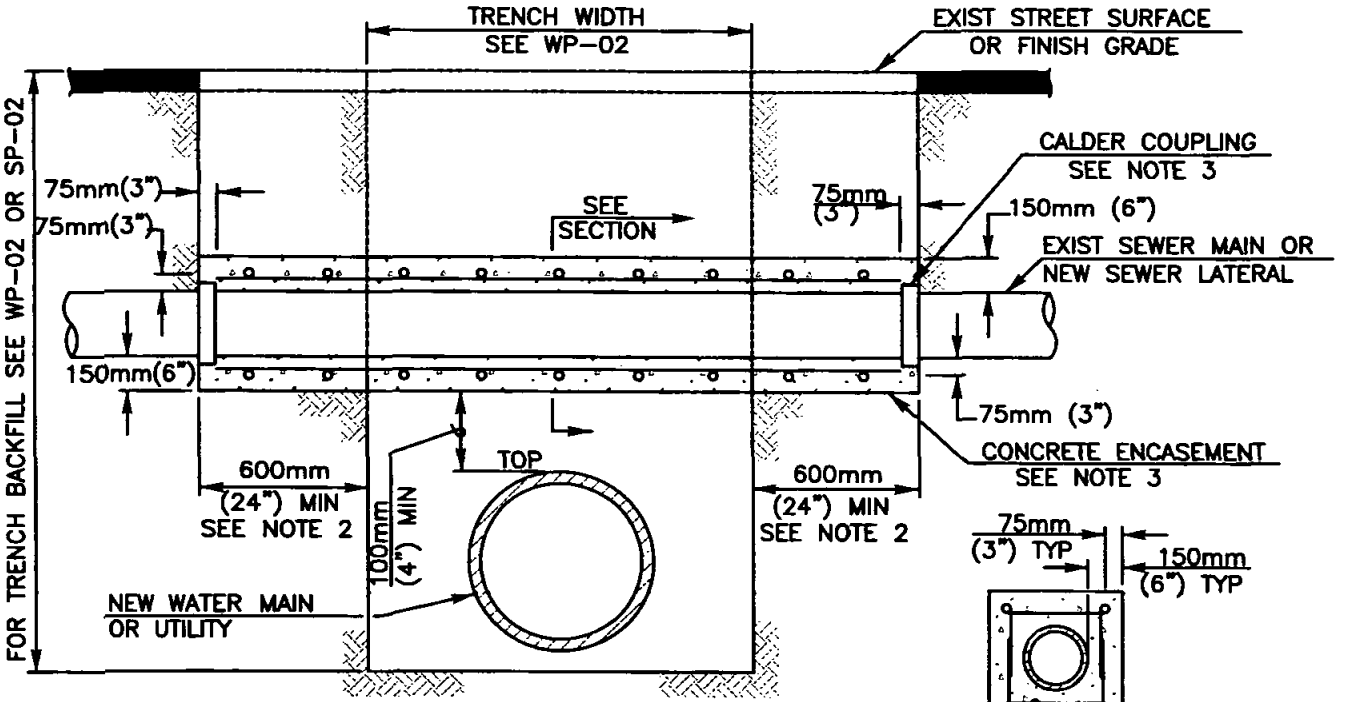

ELEVATION

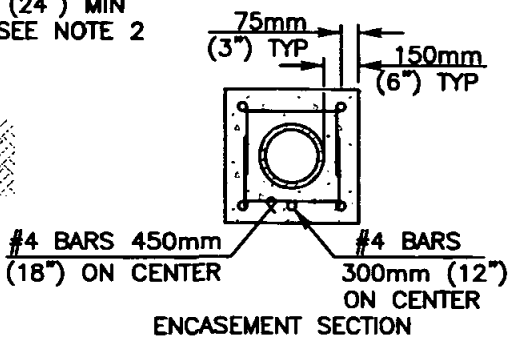

ENCASEMENT SECTION

NOTES:

1) REFER TO AGENCY SPECIFICATIONS FOR PROTECTION OF EXISTING FACILITIES
2) ENCASEMENT SHALL EXTEND TO FIRST JOINT BEYOND BOTH SIDES OF TRENCH [600mm (24") MIN 1200mm (48") MAX OF SUITABLE NATIVE SUPPORT BEYOND EDGE OF TRENCH].
3) CONCRETE ENCASEMENT REQUIRED FOR SEWER MAINS ONLY. CALDER COUPLINGS REQUIRED FOR SEWER LATERALS ONLY. SEWER LATERALS TO BE REPLACED WITH SCH. 80 PVC WITH NO INTERMEDIATE JOINTS.
4) FOR PIPE BEDDING AND TRENCH BACKFILL SEE WP-02 OR SP-02.

LEGEND ON PLANS

Revision	By	Approved	Date
ORIGINAL		J. Tomasulo	10/04

SAN DIEGO REGIONAL STANDARD DRAWING

PIPE SUPPORT FOR UNDERCUT SEWER MAINS OR SEWER LATERALS

RECOMMENDED BY THE SAN DIEGO REGIONAL STANDARDS COMMITTEE

10/28/2004

Chairperson R.C.E. 19246 Date

DRAWING NUMBER WP-09

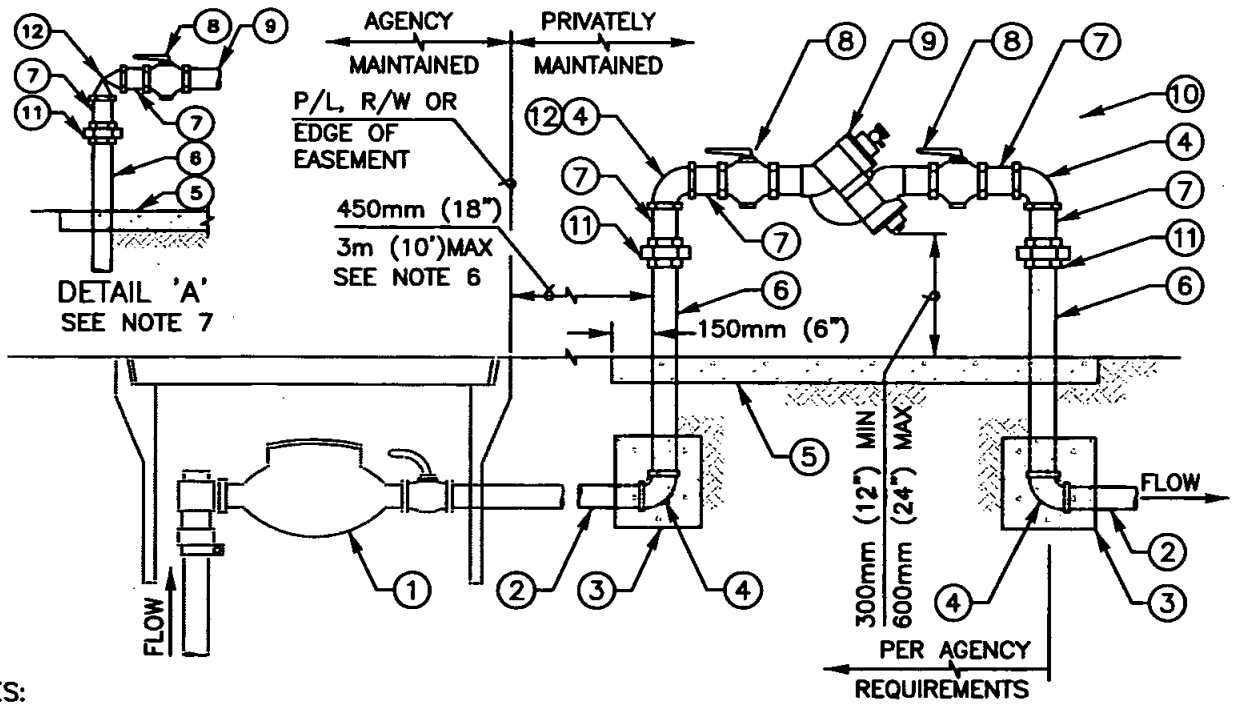

NOTES:

1) REFER TO AGENCY SPECIFICATIONS WHERE APPLICABLE
2) INSTALL WARNING/IDENTIFICATION TAPE AS SHOWN ON WP-01
3) LOCATE BACKFLOW PREVENTION DEVICE (BPD) IN SUCH A MANNER THAT WILL ALLOW THE DEVICE TO BE READILY ACCESSIBLE FOR INSPECTION AND REPAIR
4) STRAINERS SHALL NOT BE INSTALLED PRIOR TO THE FIRST SHUT-OFF VALVE
5) ALL ABOVE GROUND PIPING, UNIONS, ELBOWS, & NIPPLES SHALL BE SOLDERED OR THREADED BRASS
6) INSTALL A CASING ENCASED IN CONCRETE WHEN THE DISTANCE BETWEEN THE METER BOX AND THE RISER TO THE BPD EXCEEDS 450mm (18")
7) INSTALL AN ANGLE PRESSURE REDUCING VALVE IN LIEU OF THE FIRST 90° ELL WHEN SYSTEM PRESSURE EXCEEDS 1.03 MPa (150 PSI) PER AGENCY SPECIFICATIONS
8) TESTING SHALL BE CONDUCTED IN ACCORDANCE WITH AGENCY SPECIFICATIONS PRIOR TO ACCEPTANCE
9) BPD & APPURTENANCES INSTALLED FOR THE USE OF RECYCLED WATER SHALL BE IDENTIFIED AS DESCRIBED IN AGENCY SPECIFICATIONS
10) MATERIALS SHALL BE SELECTED FROM THE AGENCY'S APPROVED MATERIALS LIST

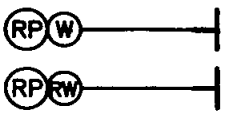

LEGEND ON PLANS

ITEM NO	SIZE AND DESCRIPTION	ITEM NO	SIZE AND DESCRIPTION
1	METER BOX & METER ASSEMBLY SEE WS-01 & WS-02	6	BRASS OR COPPER PIPE SEE NOTE 5
2	SCH 80 PVC, BRASS OR COPPER PIPE	7	75mm (3") LONG NIPPLE SEE NOTE 5
3	CONCRETE THRUST BLOCK SEE WT-01	8	BALL VALVE "SHUT-OFF"
4	90° ELL SEE NOTES 5 & 7	9	REDUCED PRESSURE BACKFLOW DEVICE
5	CONCRETE SLAB, MINIMUM 100mm (4") THICK x 450mm (18") WIDE	10	ENCLOSURE (OPTIONAL)
		11	UNION SEE NOTE 5
		12	ANGLE PRV SEE NOTES 5 & 7

Revision	By	Approved	Date
ORIGINAL		Kercheval	12/75
Add Metric		T. Stanton	03/03
Replaced W-27		J. Tomasulo	10/04

SAN DIEGO REGIONAL STANDARD DRAWING

19mm THRU 50mm (3/4" THRU 2") REDUCED PRESSURE BACKFLOW PREVENTION DEVICE

RECOMMENDED BY THE SAN DIEGO REGIONAL STANDARDS COMMITTEE

10/28/2004

Chairperson R.C.E. 19246 Date

DRAWING NUMBER WR-01

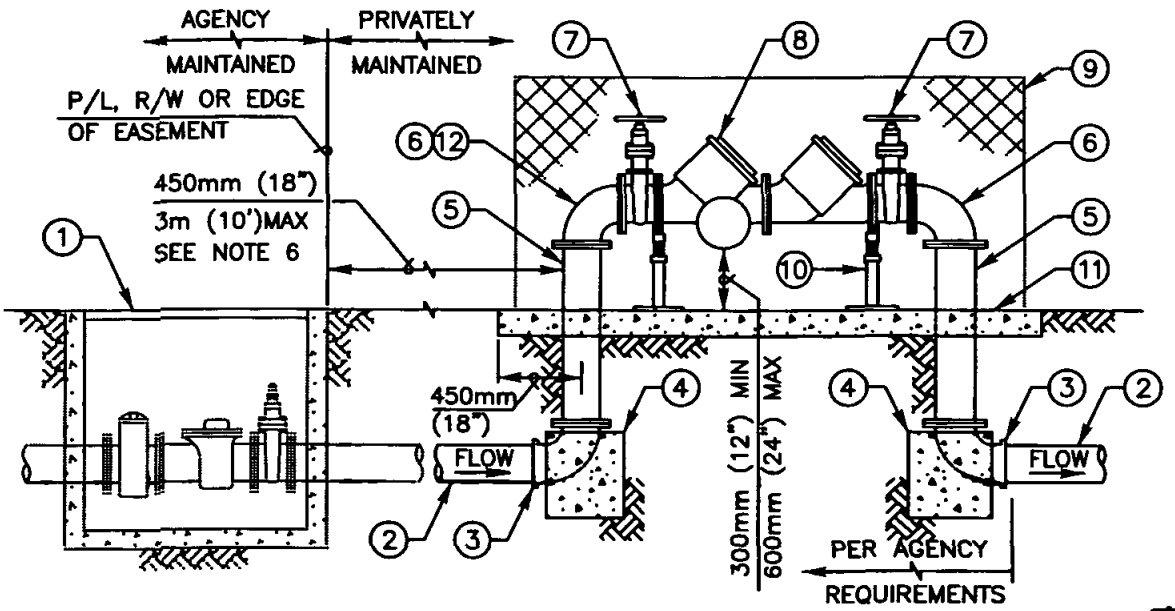

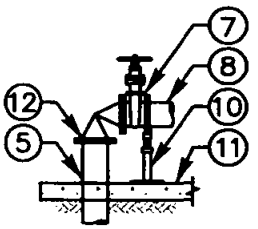

DETAIL 'A'
SEE NOTE 7

NOTES:

1) REFER TO AGENCY SPECIFICATIONS WHERE APPLICABLE
2) INSTALL WARNING/IDENTIFICATION TAPE AS SHOWN ON WP-01
3) LOCATE BACKFLOW PREVENTION DEVICE (BPD) IN SUCH A MANNER THAT WILL ALLOW THE DEVICE TO BE READILY ACCESSIBLE FOR INSPECTION AND REPAIR
4) STRAINERS SHALL NOT BE INSTALLED PRIOR TO THE FIRST SHUT-OFF VALVE
5) INSTALL A CASING ENCASED IN CONCRETE WHEN THE DISTANCE BETWEEN THE METER BOX AND THE RISER TO THE BPD EXCEEDS 450mm (18")
6) INSTALL AN ANGLE PRESSURE REDUCING VALVE IN LIEU OF THE FIRST 90° ELL WHEN SYSTEM PRESSURE EXCEEDS 1.03 MPa (150 PSI) PER AGENCY SPECIFICATIONS
7) TESTING SHALL BE CONDUCTED IN ACCORDANCE WITH AGENCY SPECIFICATIONS PRIOR TO ACCEPTANCE
8) BPD & APPURTENANCES INSTALLED FOR THE USE OF RECYCLED WATER SHALL BE IDENTIFIED AS DESCRIBED IN AGENCY SPECIFICATIONS
9) MATERIALS SHALL BE SELECTED FROM THE AGENCY'S APPROVED MATERIALS LIST

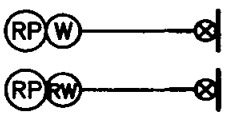

LEGEND ON PLANS

ITEM NO	SIZE AND DESCRIPTION	ITEM NO	SIZE AND DESCRIPTION
1	METER VAULT & METER ASSEMBLY SEE WS-04	7	FLANGED RESILIENT WEDGE GATE VALVE
2	PVC OR DUCTILE IRON PIPE	8	REDUCED PRESSURE BACKFLOW DEVICE
3	FLG x FLG OR MJ/PO x FLG 90° BEND	9	ENCLOSURE (OPTIONAL)
4	CONCRETE THRUST BLOCK SEE WT-01	10	ADJUSTABLE VALVE SUPPORT
5	FLANGED DUCTILE IRON PIPE	11	CONCRETE SLAB, MINIMUM 100mm (4") THICK x 900mm (36") WIDE
6	FLANGED 90° BEND, SEE NOTE 6	12	FLANGED ANGLE PRESSURE REDUCING VALVE SEE NOTE 6

Revision	By	Approved	Date
ORIGINAL		Kercheval	12/75
Add Metric		T. Stanton	03/03
Replaced W-28		J. Tomasulo	10/04

SAN DIEGO REGIONAL STANDARD DRAWING

100mm (3") AND LARGER REDUCED PRESSURE BACKFLOW PREVENTION DEVICE

RECOMMENDED BY THE SAN DIEGO REGIONAL STANDARDS COMMITTEE

T. Stanton 10/28/2004

Chairperson R.C.E. 19246 Date

DRAWING NUMBER WR-02

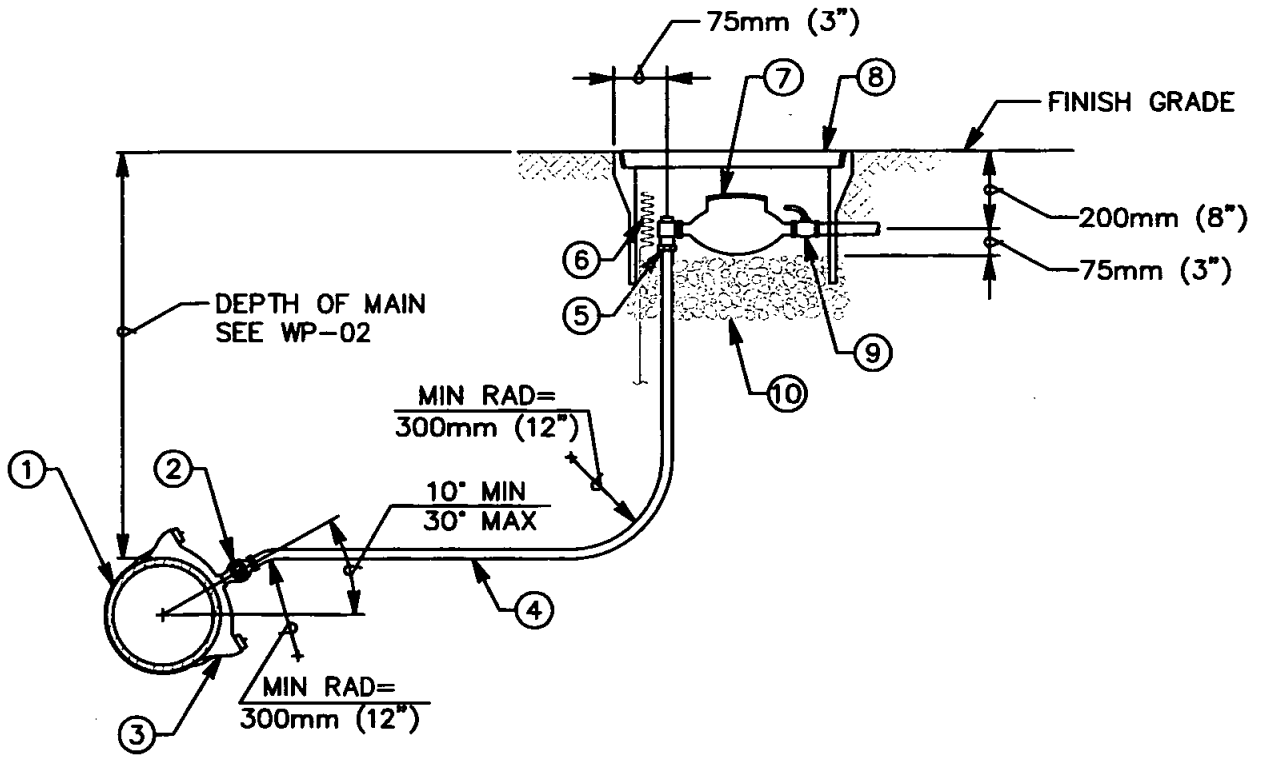

NOTES:

1) REFER TO AGENCY SPECIFICATIONS WHERE APPLICABLE
2) INSTALL CORPORATION STOP WITH KEY IN THE SIDE POSITION
3) SET TOP OF METER BOX FLUSH WITH SIDEWALK, CURB, OR FINISH GRADE
4) LOCATE METER BOX AS SHOWN ON WS-03
5) INSTALL WARNING/IDENTIFICATION TAPE AS SHOWN ON WP-01
6) WATER LATERALS INSTALLED FOR THE USE OF RECYCLED WATER SHALL BE IDENTIFIED AS DESCRIBED IN AGENCY SPECIFICATIONS
7) SILVER SOLDER JOINTS SHALL NOT BE USED
8) ON STEEL MAINS USE WELD ON COUPLINGS, ON DUCTILE IRON MAINS USE DUCTILE IRON SERVICE SADDLES (INSULATING BUSHINGS ARE REQUIRED)
9) MATERIALS SHALL BE SELECTED FROM THE AGENCY'S APPROVED MATERIALS LIST

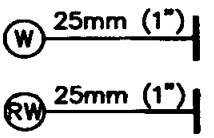

LEGEND ON PLANS

ITEM NO	SIZE AND DESCRIPTION	ITEM NO	SIZE AND DESCRIPTION
1	WATER MAIN	7	WATER METER FURNISHED & INSTALLED BY THE WATER AGENCY OF JURISDICTION
2	25mm (1") BRONZE CORPORATION STOP	8	METER BOX WITH LID, 250mm x 500mm (10" x 20")
3	SIZE x 25mm (1") SERVICE SADDLE	9	CUSTOMER SHUT-OFF VALVE (LOCKABLE) FURNISHED AND INSTALLED BY THE WATER AGENCY OF JURISDICTION
4	25mm (1") x REQUIRED LENGTH COPPER PIPE TYPE "K" SOFT	10	10mm (3/8") ROCK, 100mm TO 150mm (4" TO 6") DEEP
5	25mm (1") BRONZE ANGLE METER STOP WITH LOCKWING		
6	TRACER WIRE (AS REQUIRED), SEE WP-01		

Revision	By	Approved	Date
ORIGINAL		Kercheval	12/75
Add Metric		T. Stanton	03/03
Replaced W-01		J. Tomasulo	10/04

SAN DIEGO REGIONAL STANDARD DRAWING

25mm (1") WATER SERVICE INSTALLATION

RECOMMENDED BY THE SAN DIEGO REGIONAL STANDARDS COMMITTEE

10/28/2004

Chairperson R.C.E. 19246 Date

DRAWING NUMBER WS-01

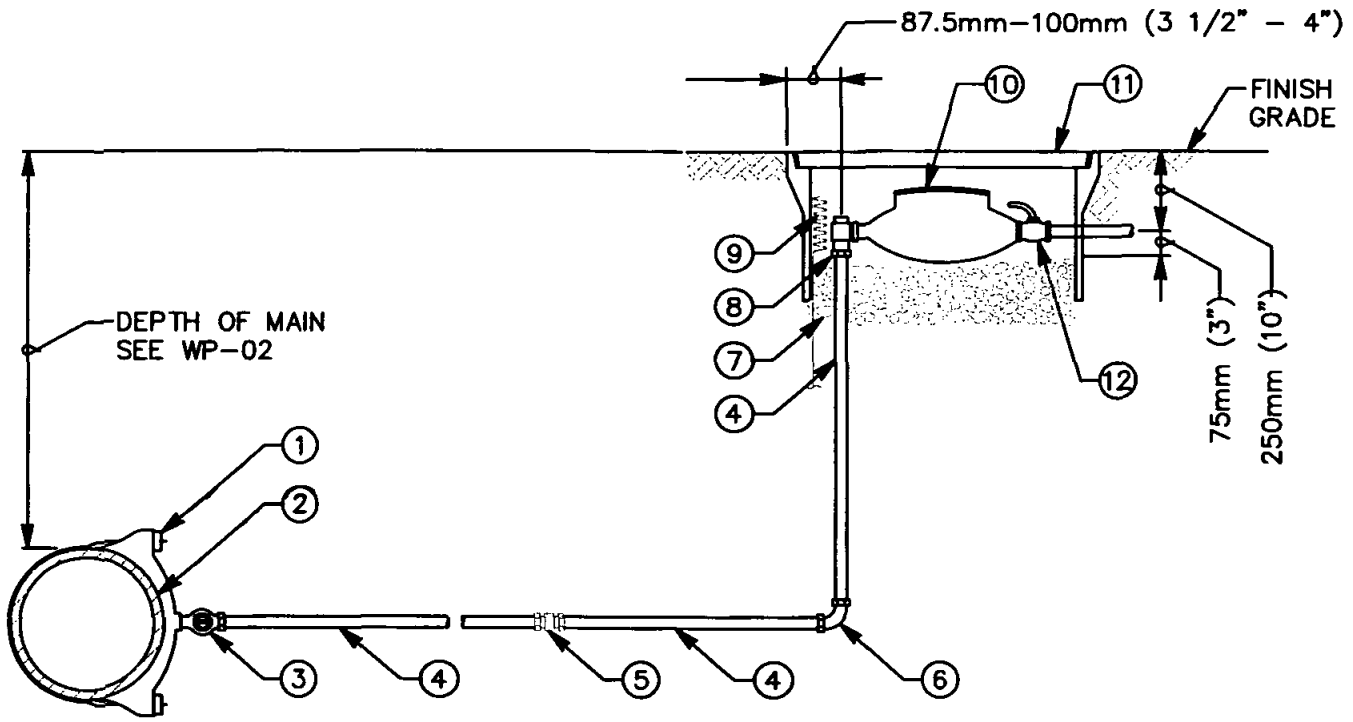

NOTES:

1) REFER TO AGENCY SPECIFICATIONS WHERE APPLICABLE
2) INSTALL CORPORATION STOP WITH KEY IN THE SIDE POSITION
3) SET TOP OF METER BOX FLUSH WITH SIDEWALK, CURB, OR FINISH GRADE
4) LOCATE METER BOX AS SHOWN ON WS–03
5) INSTALL WARNING/IDENTIFICATION TAPE AS SHOWN ON WP–01
6) WATER LATERALS INSTALLED FOR THE USE OF RECYCLED WATER SHALL BE IDENTIFIED AS DESCRIBED IN AGENCY SPECIFICATIONS
7) SILVER SOLDER JOINTS SHALL NOT BE USED
8) ON STEEL MAINS USE WELD ON COUPLINGS, ON DUCTILE IRON MAINS USE DUCTILE IRON SERVICE SADDLES (INSULATING BUSHINGS ARE REQUIRED)
9) MATERIALS SHALL BE SELECTED FROM THE AGENCY'S APPROVED MATERIALS LIST

W — 50mm (2")

RW — 50mm (2")

LEGEND ON PLANS

ITEM NO	SIZE AND DESCRIPTION	ITEM NO	SIZE AND DESCRIPTION
1	SIZE x 50mm (2") SERVICE SADDLE	7	10mm (3/8") ROCK, 100mm x 150mm (4" TO 6") DEEP
2	WATER MAIN	8	50mm (2") BRONZE ANGLE METER STOP WITH LOCKWING
3	50mm (2") BRONZE CORPORATION STOP	9	TRACER WIRE (AS REQUIRED), SEE WP–01
4	50mm (2") x REQUIRED LENGTH COPPER PIPE TYPE "K" SOFT/RIGID OR UNLESS OTHERWISE SPECIFIED BY AGENCY OF JURISDICTION	10	WATER METER FURNISHED AND INSTALLED BY THE WATER AGENCY OF JURISDICTION
5	50mm (2") BRONZE COMPRESSION COUPLING COPPER TO COPPER (IF REQUIRED)	11	METER BOX WITH LID, 425mm x 750mm (17"x 30")
6	50mm (2") BRONZE COMPRESSION ELL	12	CUSTOMER SHUT–OFF VALVE (LOCKABLE)

Revision	By	Approved	Date
ORIGINAL		Kercheval	12/75
Add Metric		T. Stanton	03/03
Replaced W–02		J. Tomasulo	10/04

SAN DIEGO REGIONAL STANDARD DRAWING

50mm (2") WATER SERVICE INSTALLATION

RECOMMENDED BY THE SAN DIEGO REGIONAL STANDARDS COMMITTEE

T. Stanton 10/28/2004

Chairperson R.C.E. 19246 Date

DRAWING NUMBER WS–02

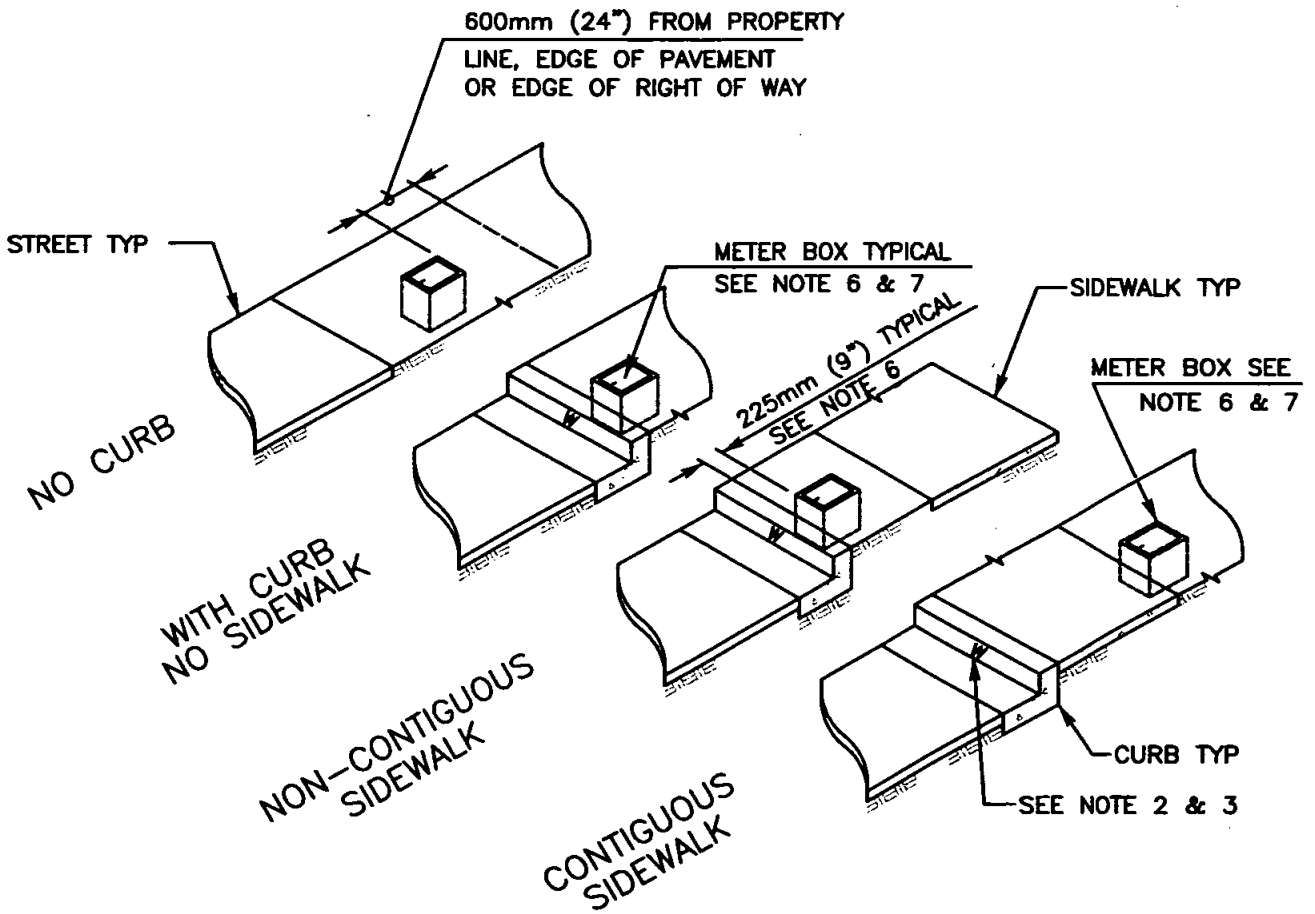

NOTES:

1) REFER TO AGENCY SPECIFICATIONS WHERE APPLICABLE
2) STAMP OR CHISEL A 50mm (2") HIGH 'W' IN CURB FACE TO IDENTIFY POTABLE WATER SERVICE LOCATION
3) STAMP OR CHISEL A 50mm (2") HIGH 'RW' IN CURB FACE TO IDENTIFY RECYCLED WATER SERVICE LOCATION
4) METER BOXES ARE NOT TO BE INSTALLED IN DRIVEWAYS, SIDEWALKS OR WITHIN PAVED ROADWAYS
5) MULTIPLE METER BOXES SHALL BE INSTALLED WITH A MINIMUM OF 225mm (9") BETWEEN BOXES
6) METER BOX SHALL BE INSTALLED 225mm (9") FROM THE BACK OF BERM, CURB, OR SIDEWALK (TYP)
7) AN EASEMENT MAY BE NEEDED DEPENDING ON LOCATION OF METER BOX
8) METER BOXES INSTALLED FOR THE USE OF RECYCLED WATER SHALL BE IDENTIFIED AS DESCRIBED IN AGENCY'S SPECIFICATIONS
9) MATERIALS SHALL BE SELECTED FROM THE AGENCY'S APPROVED MATERIALS LIST

Revision	By	Approved	Date
ORIGINAL		Kercheval	12/75
Add Metric		T. Stanton	03/03
Replaced W-15		J. Tomasulo	10/04

SAN DIEGO REGIONAL STANDARD DRAWING

METER BOX LOCATIONS FOR WATER AND RECYCLED WATER APPURTENANCES

RECOMMENDED BY THE SAN DIEGO REGIONAL STANDARDS COMMITTEE

T. Stanton 10/28/2004

Chairperson R.C.E. 19246 Date

DRAWING NUMBER WS-03

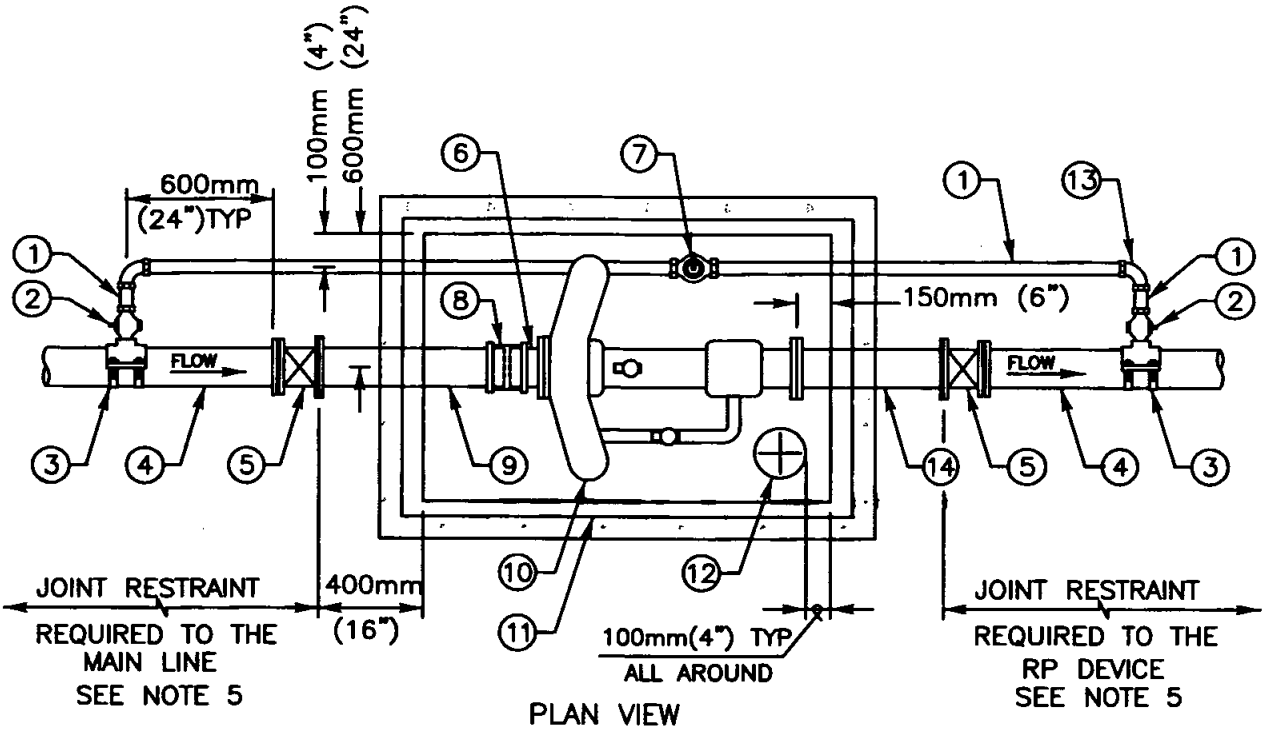

PLAN VIEW

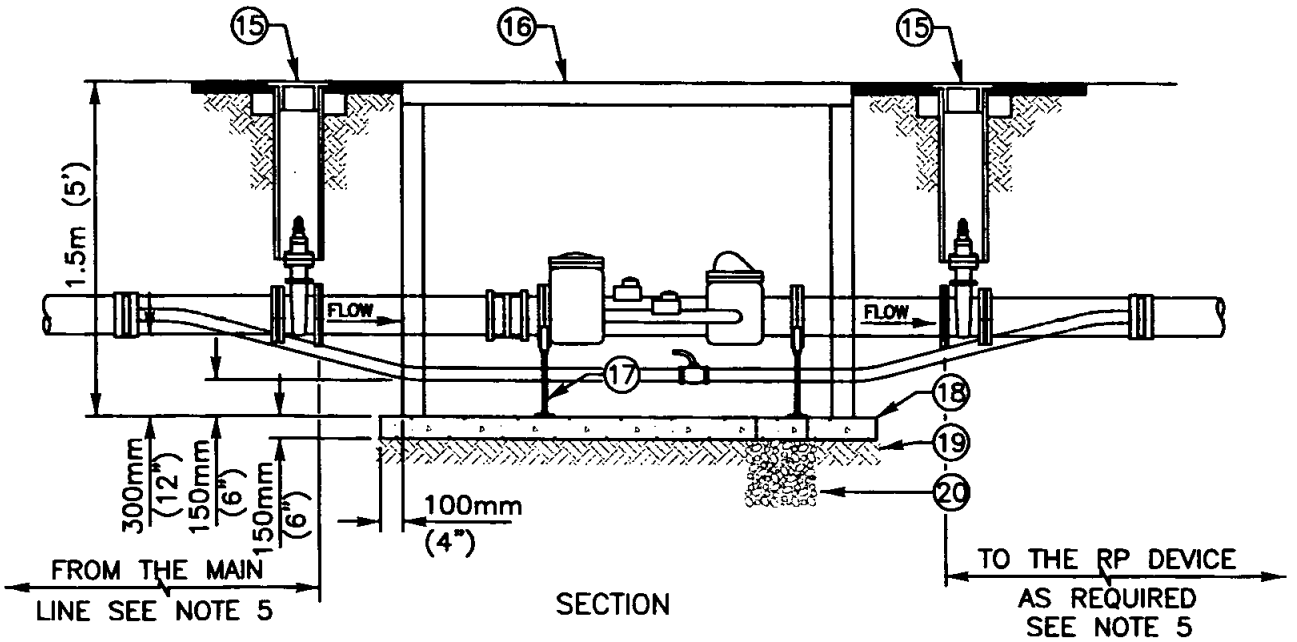

SECTION

(INDICATE SIZE)

LEGEND ON PLANS

FOR MATERIAL DESCRIPTIONS AND NOTES SEE WS-04 (2 OF 2)

Revision	By	Approved	Date
ORIGINAL		J. Tomasulo	10/04

SAN DIEGO REGIONAL STANDARD DRAWING

100mm (4") OR 150mm (6") FIRELINE/MASTER METER INSTALLATION

RECOMMENDED BY THE SAN DIEGO REGIONAL STANDARDS COMMITTEE

10/28/2004

Chairperson R.C.E. 19246 Date

DRAWING NUMBER WS-04 (1 OF 2)

FOR DRAWING OF THE METER INSTALLATION SEE WS-04 (SHEET 1 OF 2)

NOTES:
1) REFER TO AGENCY SPECIFICATIONS WHERE APPLICABLE
2) TO BE USED WHERE BOTH DOMESTIC SERVICE AND FIRE PROTECTION ARE INSTALLED ON THE SAME PRIVATE SYSTEM
3) LOCATION OF METER SHALL BE APPROVED BY THE DISTRICT ENGINEER PRIOR TO INSTALLATION IN ACCORDANCE WITH STANDARD DWG WS-06
4) 200mm (8") OR 250mm (10") METERS TO BE DESIGNED BY AN ENGINEER AND SUBMITTED FOR AGENCY'S APPROVAL AS NEEDED ON A CASE-BY-CASE BASIS
5) JOINT RESTRAINT SHALL BE IN ACCORDANCE WITH AGENCY SPECIFICATIONS
6) METERS SHALL BE FURNISHED AND INSTALLED BY THE AGENCY OF JURISDICTION
7) 100mm (4") METER REQUIRES A 1200mm x 1500mm (48" x 60") VAULT
   150mm (6") METER REQUIRES A 1200mm x 1800mm (48" x 72") VAULT
8) IN AREAS WHERE GROUND WATER IS PRESENT THE AGENCY'S ENGINEER MAY REQUIRE A SEALED SUMP TO BE CONSTRUCTED
9) CONNECTIONS TO STEEL WATER MAINS SHALL BE IN ACCORDANCE WITH AGENCY SPECIFICATIONS
10) MATERIALS SHALL BE SELECTED FROM THE AGENCY'S APPROVED MATERIALS LIST

ITEM NO	SIZE AND DESCRIPTION	ITEM NO	SIZE AND DESCRIPTION
1	50mm (2") x REQUIRED LENGTH TYPE "K" COPPER PIPE	11	FRP VAULT WITH HINGED ACCESS DOOR, SEE NOTE 7
2	50mm (2") BRONZE CORPORATION STOP	12	300mm (12") DIAMETER x 150mm (6") LONG PVC PIPE
3	LINE SIZE x 50mm (2") SERVICE SADDLE	13	50mm (2") 90° COMPRESSION ELL (TYPICAL)
4	100mm (4") OR 150mm (6") PVC PIPE	14	LINE SIZE x 600mm (24") LONG FLANGED DUCTILE-IRON SPOOL
5	100mm (4") OR 150mm (6") FLG x MJ RWGV MECHANICALLY RESTRAINED, SEE NOTE 5	15	200mm (8") GATE WELL. SEE WV-01 & WV-02
6	LINE SIZE x 150mm (6") LONG FLG x PE DUCTILE-IRON SPOOL	16	HINGED VAULT ACCESS DOOR
7	50mm (2") COMPRESSION, LOCKABLE BALL VALVE	17	ADJUSTABLE PIPE SUPPORT (TYPICAL)
8	100mm (4") OR 150mm (6") FLEXIBLE COUPLING	18	150mm (6") CLASS "B" CONCRETE FLOOR WITH #3 BARS @ 300mm (12") C.C.
9	LINE SIZE x 750mm (30") LONG FLG x PE DUCTILE-IRON SPOOL	19	150mm (6") DG BASE COMPACTED TO 90%
10	100mm (4") OR 150mm (6") FIRELINE METER SEE NOTE 6	20	300mm (12") DIAMETER x 300mm (12") DEEP, 19mm (3/4") GRAVEL SUMP, SEE NOTE 8

Revision	By	Approved	Date
ORIGINAL		J. Tomasulo	10/04

SAN DIEGO REGIONAL STANDARD DRAWING

100mm (4") OR 150mm (6") FIRELINE/MASTER METER INSTALLATION

RECOMMENDED BY THE SAN DIEGO REGIONAL STANDARDS COMMITTEE

10/28/2004

Chairperson R.C.E. 19246. Date

DRAWING NUMBER WS-04 (2 OF 2)

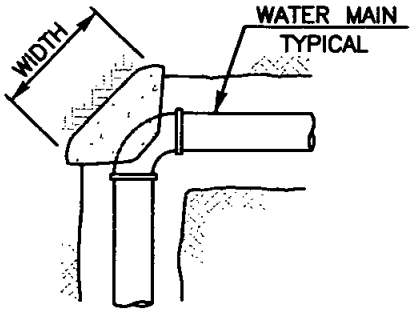

BEND

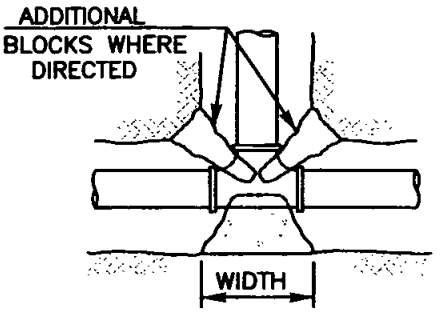

TEE PLAN

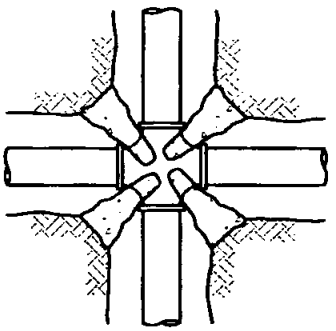

CROSS

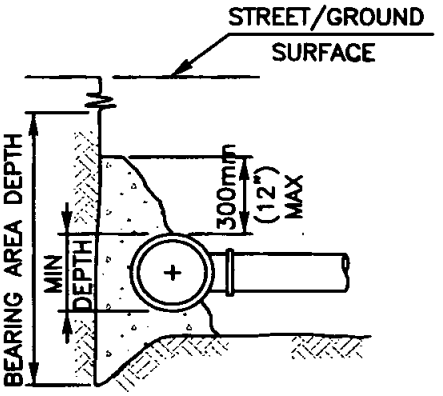

TEE ELEVATION

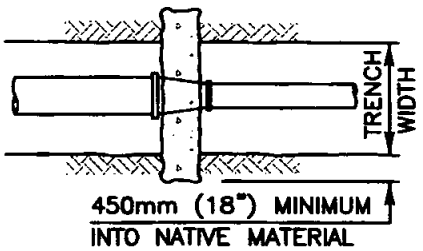

REDUCER

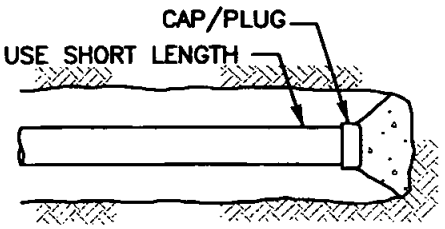

END CAP

SEE NOTE
2 BELOW

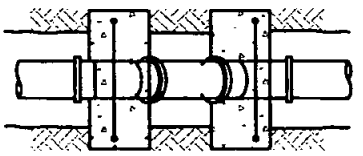

VERT BENDS PLAN

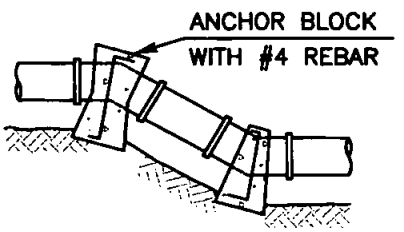

VERT BENDS ELEVATION

NOTES:
1) FOR ADDITIONAL THRUST BLOCKS, ANCHOR BLOCKS AND NOTES SEE WT-01 (2 OF 3) & (3 OF 3)
2) THE ANCHOR BLOCKS ON VERTICAL BENDS REQUIRE AGENCY APPROVAL

Revision	By	Approved	Date
ORIGINAL		Kercheval	12/75
Add Metric		T. Stanton	03/03
Repl. W-17 through W-22		J. Tomasulo	10/04

SAN DIEGO REGIONAL STANDARD DRAWING

CONCRETE THRUST AND ANCHOR BLOCK INSTALLATIONS

RECOMMENDED BY THE SAN DIEGO REGIONAL STANDARDS COMMITTEE

T. Stanton 10/28/2004

Chairperson R.C.E. 19246 Date

DRAWING NUMBER **WT-01** (1 OF 3)

VALVE SUPPORT BLOCK

VALVE SIZE	DIMENSION "A"	DIMENSION "B"
100mm(4")	300mm(12")	300mm(12")
150mm(6")	300mm(12")	300mm(12")
200mm(8")	325mm(13")	350mm(14")
250mm(10")	350mm(14")	400mm(16")
300mm(12")	375mm(15")	450mm(18")
DIMENSION "C" = TRENCH WIDTH PLUS TWO TIMES THE PIPE DIAMETER		

THRUST AND ANCHOR BLOCKS

MINIMUM BEARING AREA IN SQUARE METERS (SQUARE FOOT) SEE NOTE 2				
MAIN SIZE	TEES	90° BEND	45° BEND	22½° BEND
100mm(4")	0.4(4)	0.5(5)	0.3(3)	0.1(1.5)
150mm(6")	0.7(8)	0.9(10)	0.5(5)	0.2(2.5)
200mm(8")	1.1(12)	1.5(16)	0.8(9)	0.4(4.5)
250mm(10")	1.6(17)	2.2(24)	1.2(13)	0.6(6.5)
300mm(12")	2.2(24)	3.1(33)	1.8(19)	0.9(9.5)

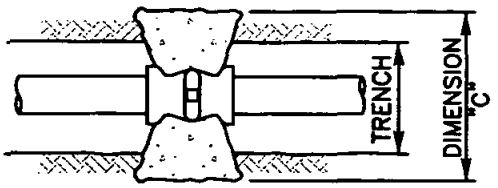

VALVE SUPPORT PLAN

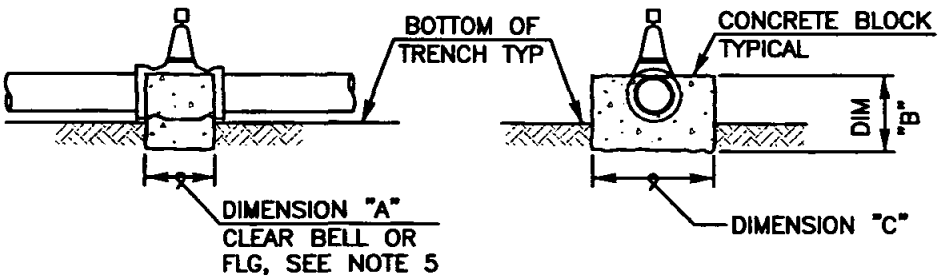

VALVE SUPPORT ELEVATION

NOTES:
1) REFER TO AGENCY SPECIFICATIONS WHERE APPLICABLE
2) BEARING AREA BASED ON SOIL BEARING VALUE OF 71,821 kPa (1500 PSF) AND 1551 kPa (225 PSI) LINE PRESSURE AND A MINIMUM OF 900mm (36") COVER
   FOR BEARING= 47,880 kPa (1000 PSF), 1.5 x AREA SHOWN
   FOR BEARING= 23,940 kPa (500 PSF), 3.0 x AREA SHOWN
3) DESIGN ENGINEER SHALL DETERMINE SIZES, REFER TO AGENCY SPECIFICATIONS FOR THRUST AND ANCHOR BLOCK SIZING
4) THRUST BLOCKS SHALL BE CENTERED ON THE FITTING SO THAT THE BEARING AREA IS EXACTLY OPPOSITE THE RESULTANT DIRECTION OF THRUST
5) CONCRETE SHALL BE PLACED SO THAT FITTINGS AND VALVES WILL BE ACCESSABLE FOR REPAIR OR REPLACEMENT
6) ALL THRUST AND ANCHOR BLOCKS SHALL BE POURED AGAINST WETTED UNDISTURBED SOIL
7) FOR MINIMUM CONCRETE CURING TIME REFER TO AGENCY SPECIFICATIONS
8) FOR ADDITIONAL THRUST BLOCKS SEE WT-01 (1 OF 3) & (3 OF 3)

Revision	By	Approved	Date
ORIGINAL		Kercheval	12/75
Add Metric		T. Stanton	03/03
Repl. W-17 through W-22		J. Tomasulo	10/04

SAN DIEGO REGIONAL STANDARD DRAWING

CONCRETE THRUST AND ANCHOR BLOCK INSTALLATIONS

RECOMMENDED BY THE SAN DIEGO REGIONAL STANDARDS COMMITTEE

10/28/2004

Chairperson R.C.E. 19246 Date

DRAWING NUMBER WT-01 (2 OF 3)

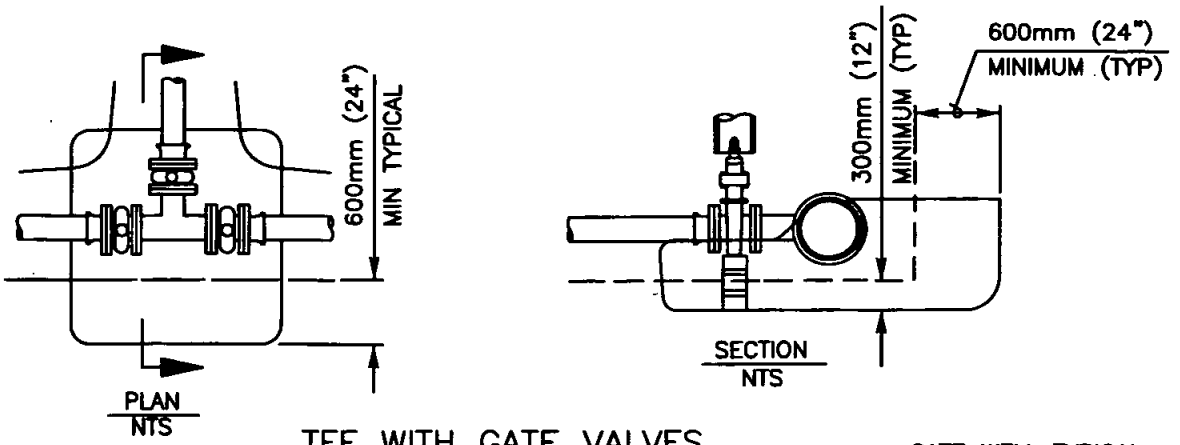

TEE WITH GATE VALVES

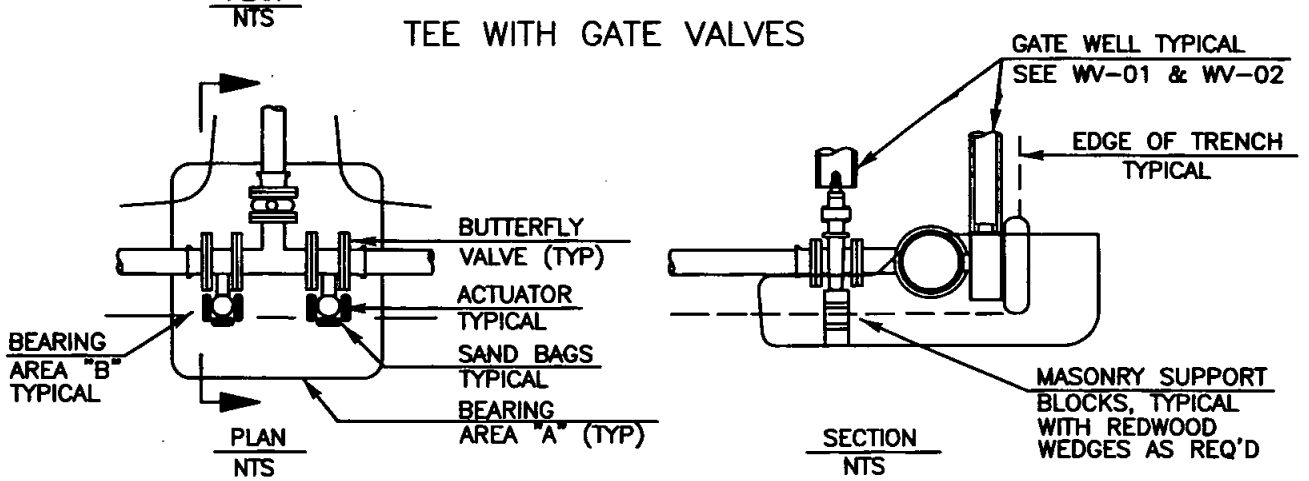

TEE WITH BUTTERFLY VALVES ON MAIN

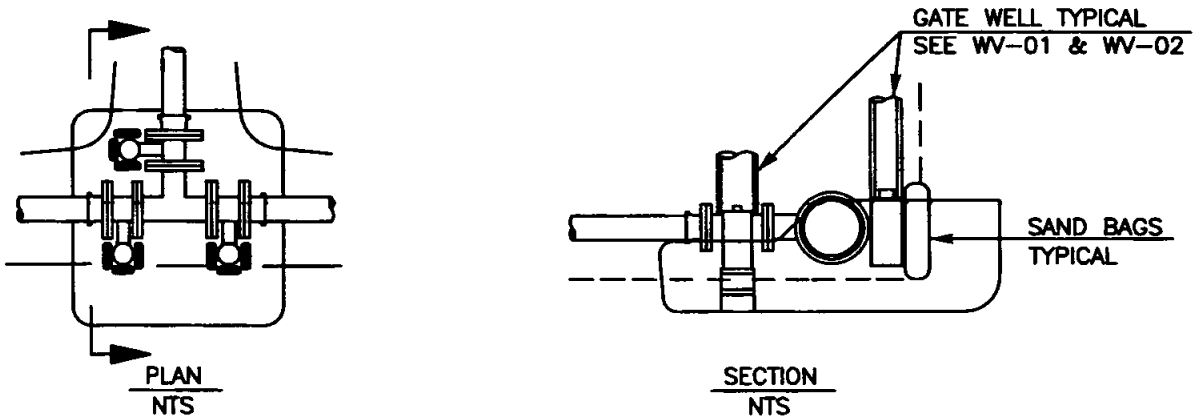

TEE WITH BUTTERFLY VALVES

NOTES:

1) BEARING AREA "B" MUST BE EQUAL TO OR GREATER THAN THE AREA REQUIRED FOR A 90° ELBOW INSTALLATION
2) INSTALL SAND BAGS AROUND BUTTERFLY VALVE ACTUATOR TO ISOLATE IT FROM CONCRETE
3) BFV'S INSTALLED AT CROSSES OR TEES REQUIRE A FLANGED DUCTILE IRON SPOOL TO BE INSTALLED BETWEEN THE FITTING AND VALVE IN ACCORDANCE WITH THE AGENCY SPECIFICATIONS

Revision	By	Approved	Date
ORIGINAL		Kercheval	12/75
Add Metric		T. Stanton	03/03
Repl. W-17 through W-22		J. Tomasulo	10/04

SAN DIEGO REGIONAL STANDARD DRAWING

CONCRETE THRUST AND ANCHOR BLOCK INSTALLATIONS

RECOMMENDED BY THE SAN DIEGO REGIONAL STANDARDS COMMITTEE

10/28/2004

Chairperson R.C.E. 19246 Date

DRAWING NUMBER **WT-01** (3 OF 3)

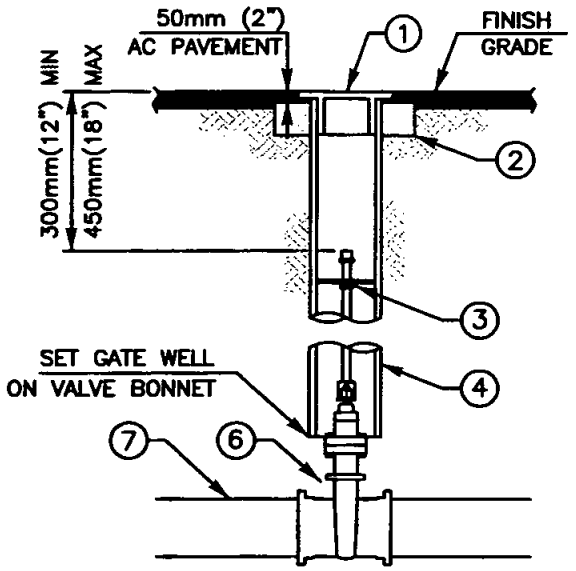

GATE WELL (GATE VALVES)

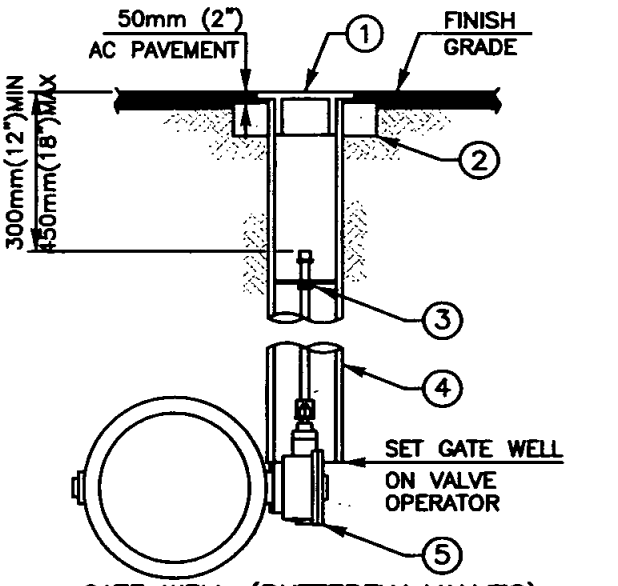

GATE WELL (BUTTERFLY VALVES)

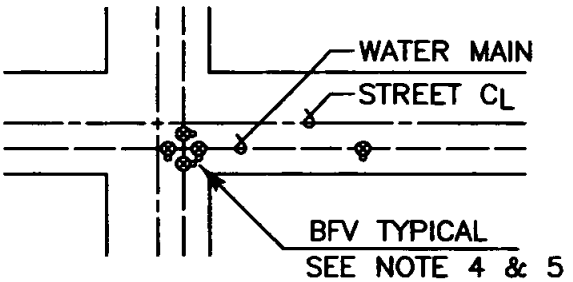

BFV OPERATOR POSITION

NOTES:
1) REFER TO AGENCY SPECIFICATIONS WHERE APPLICABLE
2) VALVES DEEPER THAN 1.5m (5') REQUIRE A VALVE STEM EXTENSION
3) EXTENSION STEMS SHALL NOT BE ATTACHED/BOLTED TO OPERATING NUT
4) GATE WELL AND CAP SHALL BE SET SO THAT NO MORE THAN TWO 25mm (1") ADJUSTMENT RINGS ARE USED
5) BFV OPERATORS TO BE LOCATED TO THE CURBLINE SIDE OF WATER MAIN
6) BFV'S INSTALLED AT CROSSES OR TEES REQUIRE A FLANGED DUCTILE IRON SPOOL TO BE INSTALLED BETWEEN THE FITTING AND VALVE IN ACCORDANCE WITH THE AGENCY'S SPECIFICATIONS
7) GATE WELLS AND CAPS SHALL BE IDENTIFIED AS DESCRIBED ON WV-03
8) FOR INLINE VALVE ANCHOR BLOCK INSTALLATION SEE WT-02
9) MATERIALS SHALL BE SELECTED FROM THE AGENCY'S APPROVED MATERIALS LIST

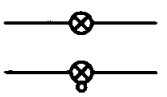

LEGEND ON PLANS

ITEM NO	SIZE AND DESCRIPTION	ITEM NO	SIZE AND DESCRIPTION
1	GATE WELL WITH CAP SEE NOTE 7	4	200mm (8") PVC CL 200, C-900 PIPE x REQUIRED LENGTH GATE WELL SEE NOTE 7
2	150mm (6") HIGH x 150mm (6") WIDE COMPACTED ASPHALT-CONCRETE RING	5	BUTTERFLY VALVE
3	VALVE STEM EXTENSION SEE NOTES 2 & 3	6	RESILIENT WEDGE GATE VALVE
		7	WATER MAIN

Revision	By	Approved	Date
ORIGINAL		Kercheval	12/75
Add Metric		T. Stanton	03/03
Repl. W-12A and W-12B		J. Tomosulo	10/04

SAN DIEGO REGIONAL STANDARD DRAWING

GATE WELL CAP INSTALLATION, FOR VALVES 100mm (4") AND LARGER

RECOMMENDED BY THE SAN DIEGO REGIONAL STANDARDS COMMITTEE

10/28/2004

Chairperson R.C.E. 19246 Date

DRAWING NUMBER WV-01

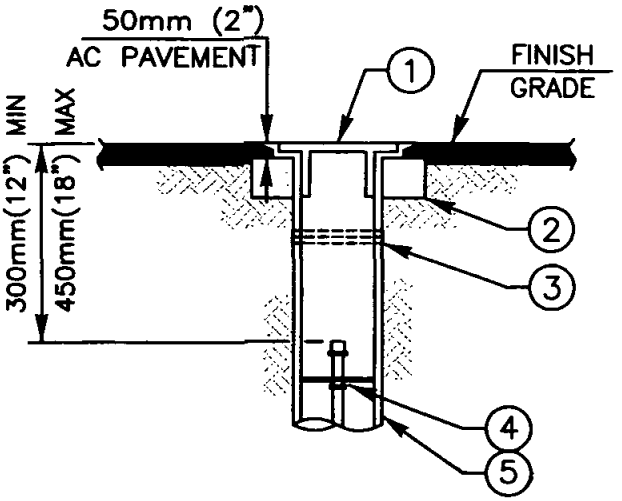

8" GATE WELL TYPE A

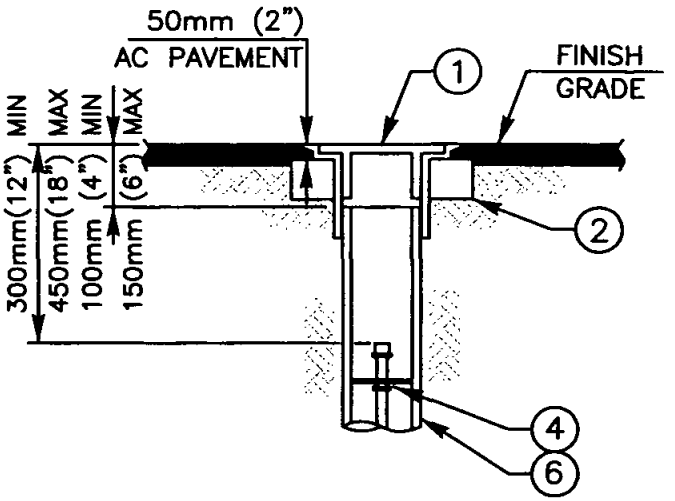

6" GATE WELL TYPE B

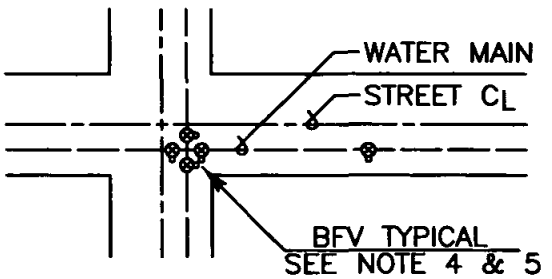

BFV OPERATOR POSITION

NOTES:
1) REFER TO AGENCY SPECIFICATIONS WHERE APPLICABLE
2) VALVES DEEPER THAN 1.5m (5') REQUIRE A VALVE STEM EXTENSION
3) EXTENSION STEMS SHALL NOT BE ATTACHED/BOLTED TO OPERATING NUT
4) GATE WELL AND CAP SHALL BE SET SO THAT NO MORE THAN TWO 25mm (1") ADJUSTMENT RINGS ARE USED
5) BFV OPERATORS TO BE LOCATED TO THE CURBLINE SIDE OF WATER MAIN
6) BFV'S INSTALLED AT CROSSES OR TEES REQUIRE A FLANGED DUCTILE IRON SPOOL TO BE INSTALLED BETWEEN THE FITTING AND VALVE IN ACCORDANCE WITH THE AGENCY'S SPECIFICATIONS
7) GATE WELLS AND CAPS SHALL BE IDENTIFIED AS DESCRIBED ON WV-03
8) FOR INLINE VALVE ANCHOR BLOCK INSTALLATION SEE WT-02
9) GATE WELL TYPE AS APPROVED BY AGENCY
10) MATERIALS SHALL BE SELECTED FROM THE AGENCY'S APPROVED MATERIALS LIST

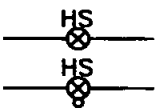

LEGEND ON PLANS

ITEM NO	SIZE AND DESCRIPTION	ITEM NO	SIZE AND DESCRIPTION
1	GATE WELL WITH CAP SEE NOTE 7	4	VALVE STEM EXTENSION SEE NOTES 2 & 3
2	150mm (6") HIGH x 150mm (6") WIDE COMPACTED ASPHALT-CONCRETE RING	5	200mm (8") PVC CL 200, C-900 PIPE x REQUIRED LENGTH GATE WELL SEE NOTE 7
3	CAULDER COUPLING	6	150mm (6") PVC CL 200, C-900 PIPE x REQUIRED LENGTH GATE WELL SEE NOTE 7

Revision	By	Approved	Date
ORIGINAL		Kercheval	12/75
Add Metric		T. Stanton	03/03
Repl. W-12A and W-12B		J. Tomasulo	10/04

SAN DIEGO REGIONAL STANDARD DRAWING

GATE WELL CAP & CAN INSTALLATION, FOR VALVES 100mm (4") AND LARGER

RECOMMENDED BY THE SAN DIEGO REGIONAL STANDARDS COMMITTEE

10/28/2004

Chairperson R.C.E. 19246 Date

DRAWING NUMBER WV-02

RECYCLED WATER

POTABLE WATER

GATE WELL LIDS

SEE NOTE 2 BELOW

COLOR	GATE WELL LIDS USED FOR:
RED	NORMALLY CLOSED SYSTEM VALVES (NCV)
PURPLE	RECYCLED WATER VALVES: LINE VALVES & AIR VALVES
YELLOW	POTABLE WATER VALVES: LINE VALVES, FIRE SERVICES, & AIR VALVES
WHITE	FIRE HYDRANTS

GATE WELL LID COLORS

SEE NOTE 5 BELOW

COLOR	GATE WELL AND LIDS USED FOR:
RED	NORMALLY CLOSED SYSTEM VALVES (NCV)
WHITE	RESILIENT WEDGE GATE VALVES
GREEN	BUTTERFLY VALVES

PAINTED IDENTIFICATION MARKING

SEE NOTE 4 BELOW

NOTES:

1) REFER TO AGENCY SPECIFICATIONS WHERE APPLICABLE
2) GATE WELL LIDS SHALL BE CAST WITH THE "AGENCY NAME" AND THE WORD "WATER" FOR USE WITH POTABLE WATER SYSTEMS AND "RECYCLED" FOR USE WITH RECYCLED WATER SYSTEMS. LIDS SHALL INCLUDE A 25mm (1") LIFTING SLOT
3) PVC GATE WELLS SHALL BE MANUFACTURED IN WHITE OR BLUE FOR USE WITH POTABLE WATER, AND PURPLE FOR USE WITH RECYCLED WATER
4) THE INSIDE PORTIONS OF THE GATE WELL LID AND PVC GATE WELL SHALL BE IDENTIFIED WITH A PAINTED IDENTIFICATION MARKING.
5) THE TOP EXTERIOR PORTION OF GATE WELL LIDS SHALL BE PAINTED WITH COLORS TO IDENTIFY THE USE OF THE VALVE INSTALLED, AS SHOWN ABOVE
6) INSTALLATION FOR THE USE OF RECYCLED WATER SHALL BE IDENTIFIED AS DESCRIBED IN AGENCY'S SPECIFICATIONS AND AS NOTED ABOVE
7) MATERIALS SHALL BE SELECTED FROM THE AGENCY'S APPROVED MATERIALS LIST

Revision	By	Approved	Date
ORIGINAL		Kercheval	12/75
Add Metric		T. Stanton	03/03
Repl. W-12A and W-12B		J. Tomasulo	10/04

SAN DIEGO REGIONAL STANDARD DRAWING

GATE WELL IDENTIFICATION

RECOMMENDED BY THE SAN DIEGO REGIONAL STANDARDS COMMITTEE

T. Stanton 10/28/200

Chairperson R.C.E. 19246 Date

DRAWING NUMBER **WV-03**

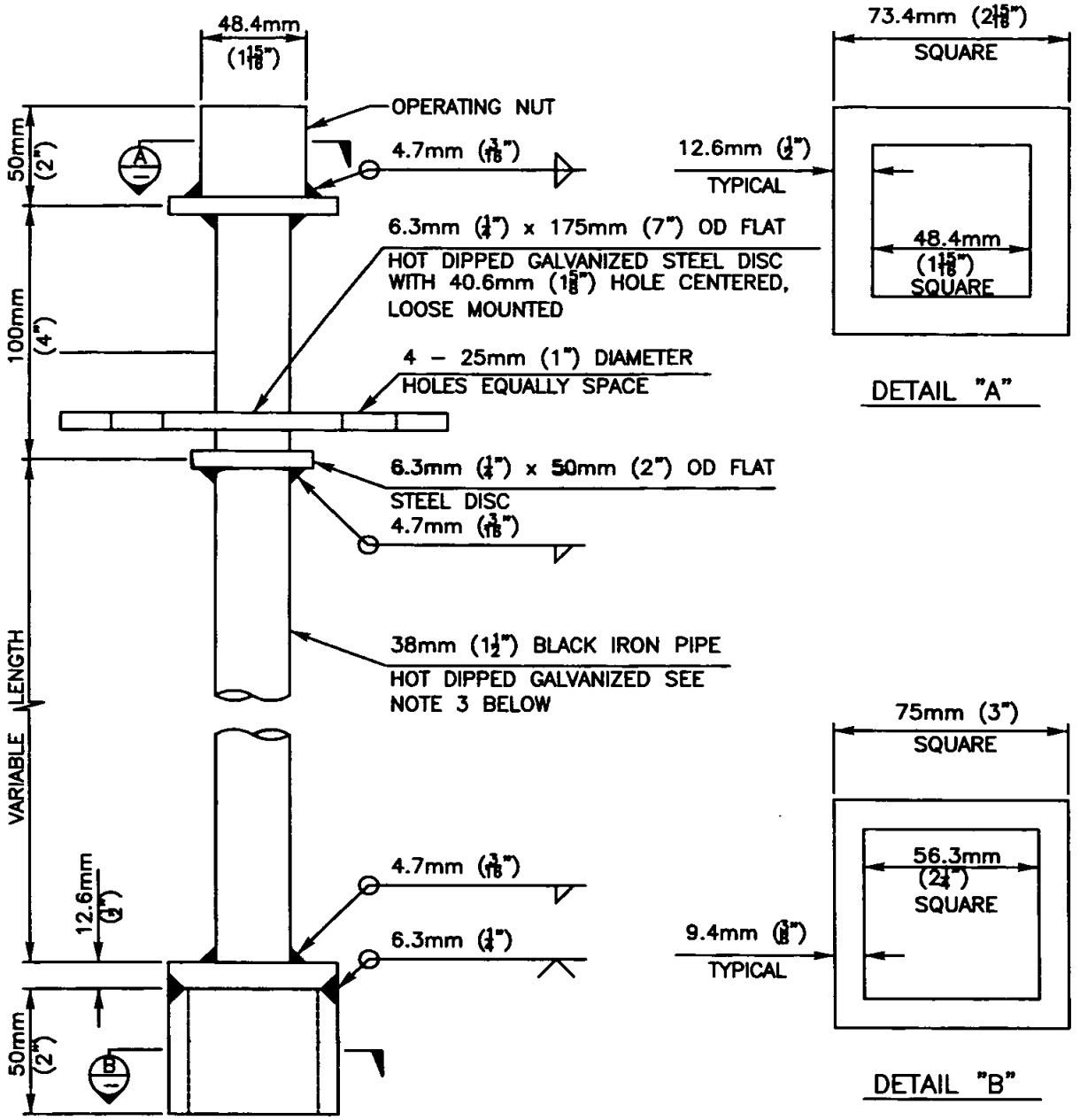

NOTES:

1) REFER TO AGENCY SPECIFICATIONS WHERE APPLICABLE AND STANDARD DRAWINGS WV-01 AND WV-02
2) STEEL EXTENSION STEMS SHALL BE USED ONLY WHERE THE MAXIMUM LENGTHS OF THE EXTENSION EXCEEDS 2.4m (8') AND AT THE REQUEST OF THE AGENCY'S ENGINEER
3) EXTENSION STEMS SHALL BE ROUND OR SQUARE STEEL TUBING OF SOLID DESIGN (NO PINNED COUPLINGS PERMITTED)
4) VALVES DEEPER THAN 1.5m (5') REQUIRE A VALVE STEM EXTENSION
5) EXTENSION STEMS SHALL NOT BE ATTACHED/BOLTED TO OPERATING NUT OF THE VALVE
6) MATERIALS SHALL BE SELECTED FROM THE AGENCY'S APPROVED MATERIALS LIST

Revision	By	Approved	Date
ORIGINAL		G.Parkinson	5/92
Add Metric		T. Stanton	03/03
Replaced W-13		J. Tomasulo	10/04

SAN DIEGO REGIONAL STANDARD DRAWING

STEEL VALVE STEM EXTENSION FOR VALVES 100mm (4") AND LARGER

RECOMMENDED BY THE SAN DIEGO REGIONAL STANDARDS COMMITTEE

10/28/2004

Chairperson R.C.E. 19246 Date

DRAWING NUMBER **WV-04**

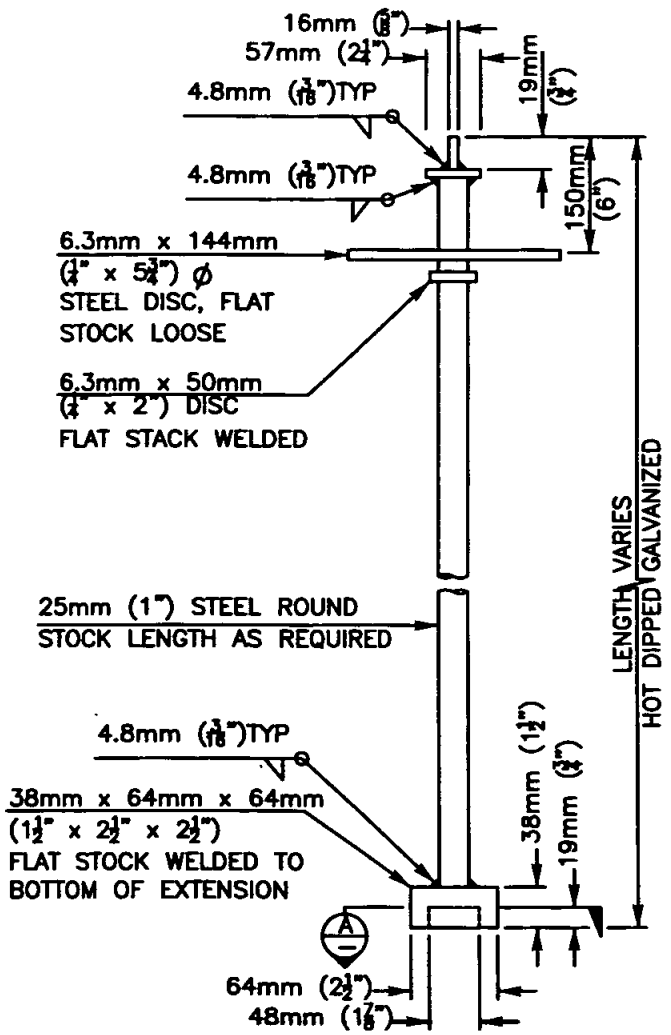

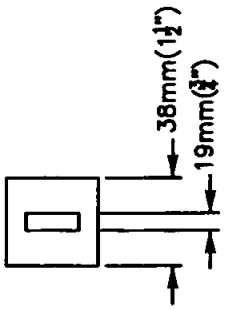

DETAIL "A"

NOTES:
1) REFER TO AGENCY SPECIFICATIONS WHERE APPLICABLE
2) EXTENSION STEMS SHALL BE ROUND STEEL TUBING OF SOLID DESIGN (NO PINNED COUPLINGS PERMITTED)
3) VALVES DEEPER THAN 1.5m (5') AND 2" AIR VALVES REQUIRE A VALVE STEM EXTENSION OR AS REQUIRED BY THE AGENCY OF JURISDICTION
4) EXTENSION STEMS SHALL NOT BE ATTACHED/BOLTED TO OPERATING NUT OF THE VALVE
5) MATERIALS SHALL BE SELECTED FROM THE AGENCY'S APPROVED MATERIALS LIST

Revision	By	Approved	Date
ORIGINAL		G.Parkinson	5/92
Add Metric		T. Stanton	03/03
Replaced W-13		J. Tomasulo	10/04

SAN DIEGO REGIONAL STANDARD DRAWING

STEEL VALVE STEM EXTENSION FOR VALVES 50mm (2") AND SMALLER

RECOMMENDED BY THE SAN DIEGO REGIONAL STANDARDS COMMITTEE

T. Stanton 10/28/2004

Chairperson R.C.E. 19246 Date

DRAWING NUMBER WV-05

APPENDIX "A"

TRAFFIC CONTROL PLANS

TRAFFIC CONTROL PLANS

REVISION	BY	APPROVED	DATE	SAN DIEGO REGIONAL STANDARD - APPENDIX "A"	DWG. NO.
				TRAFFIC CONTROL PLANS	TC

TRAFFIC CONTROL PLANS

GENERAL INFORMATION

The Traffic Control Plans depicted in this Appendix are intended to supplement Part 6 "Temporary Traffic Control" of the 2003 Manual on Uniform Traffic Control Devices (MUTCD) and 2003 MUTCD California Supplement in providing guidance and information on preparing traffic control plans. Other references may also provide useful information on traffic control procedures. It should be understood that implementation of traffic control plans must conform with the latest revisions of Part 6 of the 2003 MUTCD and 2003 MUTCD California Supplement.

Part 6 of the MUTCD Manual "Temporary Traffic Control" are published by the Federal Highway Administration (FHWA) and the California Department of Transportation (Caltrans). These manuals in combination are issued to provide the basic standards for uniform types of warning signs, lights, and other devices to be placed upon any public roadway or street by a person engaged in performing work which interferes with or endangers the safe movement of traffic flow upon such highway or street, in accordance with sections 21367 and 21400 of the California Vehicle Code.

It is the responsibility of the Contractor or Organization performing work on, or adjacent to, a roadway to install and maintain such devices which are necessary to provide safe passage for the traveling public through the work area and for the safety of the workers. Before work begins, traffic control plans for handling traffic through a construction or maintenance project shall be approved by the engineer of the public agency or authority having jurisdiction over the roadway.

Typical plans for intersections that are controlled by a traffic signal or a multi-way stop are not identified in this Appendix. These instructions require special attention in the preparation of traffic control plans. The approving agency should be notified prior to the preparation of traffic control plans when the work is in or near these intersections.

Special attention is also needed on the traffic control plans when the work areas affect bike lanes, sidewalks, pedestrian access, and curved or narrow roadways. Notification of the approving agency is desirable prior to the preparation of the plan when bicycles and pedestrian routes are affected by the work.

Nothing contained in this Appendix shall prevent local jurisdictions from modifying, changing, or adopting new specifications deemed necessary. The text and typical drawings in this Appendix are not a legal standard. Criteria for position, location, and use of traffic control devices is furnished solely for the purpose of guidance and information to assist in the preparation of traffic control plans.

Revision	By	Approved	Date
DRAWING	CRH		4/06
ORIGINAL			4/27/06

APPENDIX "A"
SAN DIEGO REGIONAL STANDARD

TRAFFIC CONTROL PLANS

GENERAL INFORMATION

DRAWING NUMBER TC-1

TRAFFIC CONTROL PLANS
TABLE OF CONTENTS

TC-1 General Information
TC-2 Table of Contents
TC-3A Typical Construction Signs
TC-3B Typical Construction Signs
TC-3C Typical Construction Signs
TC-3D Typical Construction Signs
TC-4 Device Spacing Tables
TC-5 Traffic Control Plan Cover Sheet
TC-6 Side of the Road - Two Lane TC without Centerline
TC-7 Side of the Road - Two Lane TC with Centerline
TC-8 Center of Road - Two Lane TC
TC-9 Side of Road - Two Lane TC with Flaggers
TC-10 Side of Road - Multi-Lane TC with Centerline
TC-11 Side of Road - Multi-Lane TC with Centerline
TC-12 Center of Road - Multi-Lane TC with Centerline
TC-13 Center of Road - Multi-Lane TC with Centerline
TC-14 Side of Road - Multi-Lane TC with TWLTL
TC-15 Center of Road - Multi-Lane TC with Centerline
TC-16 Side of Road - Multi-Lane TC with TWLTL
TC-17 Center of Road - Multi-Lane TC with TWLTL
TC-18 Side of Road - Multi-Lane TC with TWLTL
TC-19 Center of Road - Multi-Lane TC with TWLTL
TC-20 Center of Road - Multi-Lane TC with Centerline
TC-21 Side of Road - Multi-Lane TC with Raised Median
TC-22 Center of Road - Multi-Lane TC with Raised Median
TC-23 Side of Road - Intersection TC
TC-24 Side of Road - Intersection TC
TC-25 Center of Road - Intersection TC
TC-26 Center of Road - Intersection TC
TC-27 Center of Road - Intersection TC
TC-28 Side of Road - Intersection TC
TC-29 Center of Road - Intersection TC
TC-30 Side of Road - Intersection TC
TC-31 Center of Road - Intersection TC
TC-32 Side of Road - Left Turn Intersection TC
TC-33 Side of Road - Left Turn Intersection TC
TC-34 Side of Road - Left Turn Intersection TC
TC-35 Side of Road - Intersection TC
TC-36 Side of Road - Right Turn Intersection TC
TC-37 Side of Road - Right Turn Intersection TC
TC-38 Side of Road - Right Turn Intersection TC
TC-39 Side of Road - Right Turn Intersection TC
TC-40 Side of Road - Bike Lane Closure
TC-41 Side of Road - Typical Pedestrian Control Signs
TC-42 Side of Road - Multi-Lane Roadway with Raised Medians
TC-43 Work within Intersection - Right Lane / Left Lane
TC-44 Typical Shoulder Closure - Multi-Lane Roadway with Raised Median

Revision	By	Approved	Date
DRAWING	CRH		4/06
ORIGINAL			4/27/06

APPENDIX "A"
SAN DIEGO REGIONAL STANDARD

TRAFFIC CONTROL PLANS

GENERAL INFORMATION

DRAWING NUMBER TC-2

W20–1

W20–4

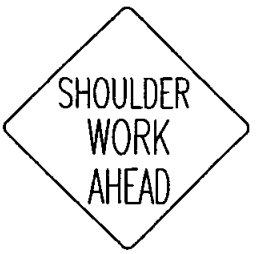

W21–5b

W3–4

R3–7R

R3–7L

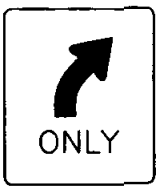

R3–5R

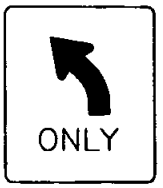

R3–5L

R4–7

R1–1

R3–1

R3–2

R3–4

R3–18

Revision	By	Approved	Date
DRAWING	CRH		4/06
ORIGINAL			4/27/06

APPENDIX "A"
SAN DIEGO REGIONAL STANDARD

TYPICAL CONSTRUCTION SIGNS

DRAWING NUMBER TC–3A

W20-3

W20-5R

W20-5L

W20-2

R11-2

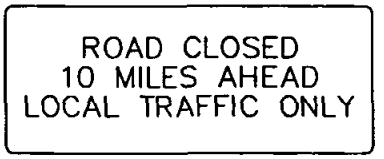

R11-3a

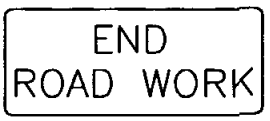

G20-2

M4-8a

R11-4

M4-10R

M4-10L

M4-8

Revision	By	Approved	Date
DRAWING	CRH		4/06
ORIGINAL			4/27/06

APPENDIX "A"
SAN DIEGO REGIONAL STANDARD

TYPICAL CONSTRUCTION SIGNS

DRAWING NUMBER TC-3B

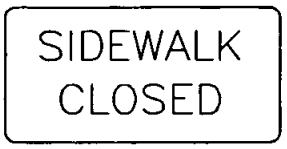

R9–9

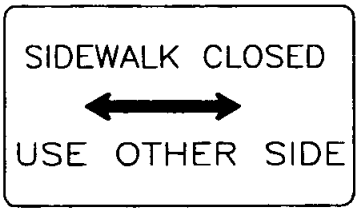

R9–10

R9–3a

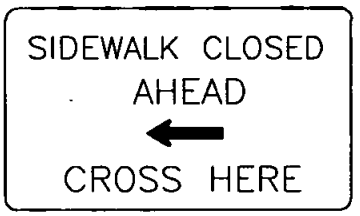

R9–11

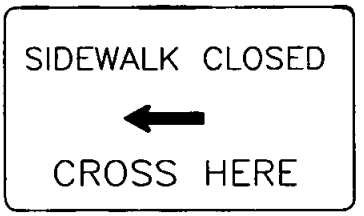

R9–11a

R4–7a

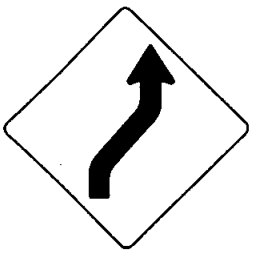

W1–4R

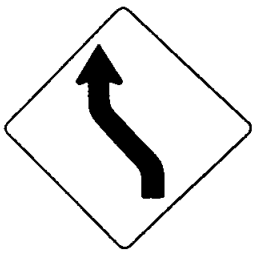

W1–4L

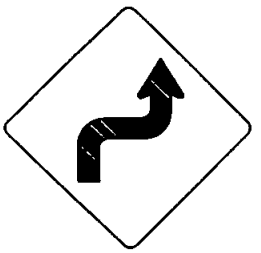

W1–3R

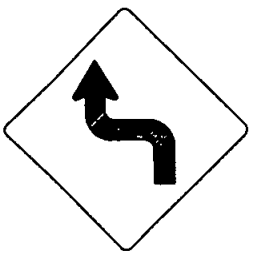

W1–3L

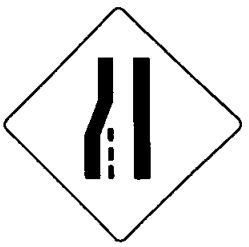

W4–2L

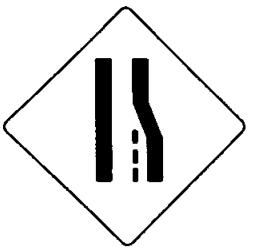

W4–2R

Revision	By	Approved	Date
DRAWING	CRH		4/06
ORIGINAL			4/27/06

APPENDIX "A"
SAN DIEGO REGIONAL STANDARD

TYPICAL CONSTRUCTION SIGNS

DRAWING NUMBER TC–3C

C12 (CA)

C27 (CA)

C30 (CA)

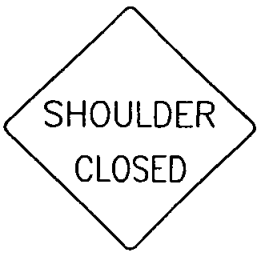

C30A (CA)

C20R (CA)

C20L (CA)

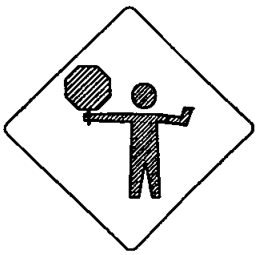

C9A (CA)

R26 (CA)

C28A (CA)

C28B (CA)

(FLAGGER PADDLES)

Revision	By	Approved	Date
DRAWING	CRH		4/06
ORIGINAL			4/27/06

APPENDIX "A"
SAN DIEGO REGIONAL STANDARD

TYPICAL CONSTRUCTION SIGNS

DRAWING NUMBER TC-3D

TABLE 1

RECOMMENDED SIGN SPACING FOR ADVANCE WARNING SIGN SERIES AND MINIMUM TAPER LENGTH

APPROACH SPEED (S) (MPH)	MINIMUM DISTANCE (FEET) BETWEEN SIGNS AND FROM LAST SIGN TO TAPER	MINIMUM TAPER LENGTHS (L) (FEET) FOR 12-FOOT LANE		
		L	1/2L	1/3L
25	150–200	125	65	45
30	200–300	180	90	60
35	250–400	245	125	85
40	350–500	320	160	110
45	500–750	540	270	180
50	500–1000	600	300	200
55+	500–1500	660	330	220

L for Merge Taper
1/2L for Shift Taper
1/3L for Shoulder Taper

TABLE 2

RECOMMENDED TAPER LENGTH AND MAXIMUM CHANNELIZER/CONE SPACING

APPROACH SPEED (S) (MPH)	BUFFER LENGTH (FEET)	MAX CONE SPACING		
		TAPER	TANGENT	CONFLICT(*)
25	55	25	50	10
30	85	30	60	15
35	120	35	70	15
40	170	40	80	20
45	220	45	90	20
50	280	50	100	25
55+	335+	55	100	25

(*) Facing Opposing Traffic, Adjacent to Work Area or Conflicting with Existing Striping

NOTES:

Taper Formula

$L = S \times W$ for speeds greater than 40 mph

$L = \frac{W \times S^2}{60}$ for speeds of 40 mph or less

Where:

L = Minimum length of taper (feet)

S = Approach Speed (mph) = Posted Speed Limit or off-peak 85th % speed prior to work starting or anticipated operating speed

W = Width of offset (feet)

	APPENDIX "A" SAN DIEGO REGIONAL STANDARD	Revision	By	Approved	Date
		DRAWING	CRH		4/06
		ORIGINAL			4/27/06
	DEVICE SPACING TABLES				
DRAWING NUMBER TC-4	SIGN SPACING TABLE TAPER LENGTH AND CONE SPACING TABLE				

TRAFFIC CONTROL PLAN/PERMIT & PERMIT EXTENSION

Revision	By	Approved	Date
ORIGINAL	DRAWING CRH		4/06
		4/27/06	

Public Utility or Company: _____ Project Contact: _____
Address: _____
City: _____ State: _____ Zip Code: _____
24 Hour Local Phone: _____ Cellular: _____ Pager: _____ Fax: _____

Contractor/ Subcontractor: _____ Project Contact: _____
Address: _____
City: _____ State: _____ Zip Code: _____
24 Hour Local Phone: _____ Cellular: _____ Pager: _____ Fax: _____

JOB LOCATION	BEGIN CROSS STREET	END CROSS STREET	PERMIT NO.

WORK HOURS continuous FROM A.M. P.M. TO A.M. P.M.	SPEED LIMIT	WORK TO BE DONE	THOMAS BROS. PAGE: COORD.:

START DATE	END DATE	1st WORK DATE EXTENSION FROM	TO NEW END DATE	2nd WORK DATE EXTENSION FROM	TO NEW END DATE

PERMIT WORK EXTENSIONS MUST BE OBTAINED BY THE END OF PERMIT DATE

REQUIREMENTS: *

1. The contractor is responsible for promptly restoring the road back to satisfactory condition which includes, but is not limited to, paving, striping, markings, signing, and loop detection.

2. The Agency reserves the right to observe these traffic control plans in operation and to make changes as field conditions warrant.

3. Trenches shall be back-filled or steel-plated during non-work hours. Steel plates shall have an asphaltic ramp on all edges, securely supported so they won't rock and a sign posted near the plates identifying the contractors name and 24 hour emergency telephone number.

3. (cont.) All dirt, dust, and debris shall be removed from the street at the end of each day and at the end of the job. The street shall be kept in a driveable condition at all times.

4. Any work that creates an undue safety risk or that creates severe congestion will be shut down by the agency.

5. A copy of all traffic requirements and traffic control plans issued by the Agency must be kept on the job site.

6. Approval of this plan does not constitute an official Permit. Contact the Agency for information on obtaining a permit.

7. All travel lanes will typically be a minimum of 12 feet wide, 14 feet if adjacent to bike lanes, unless otherwise specifically approved by the Agency.

8. Flashing arrow boards as required by the Agency.

9. Warning (W) series signs used in work zones shall be Black on an Orange background.

10. Cones and pylons shall have yellow reflectorized sleeves when placed along the centerline and white reflectorized sleeves along the outside shoulder.

11. If parking is allowed in the advance warning area, advance warning signs shall be mounted on high level devices.

12. All conflicting signs shall be covered

13. The contractor shall post tow-away/no parking signs twenty-four (24) hours in advance, with the day of week, date and work hours noted, and shall bag parking meters (where applicable).

The applicant is responsible for complete representation of the actual road conditions shown on this plan including, but not limited to, existing striping and marking, signing, sidewalks, and bike lanes.

APPLICANTS:
Name (print) _____
Address _____
Phone Number _____
Signature _____

Agent of:
- ☐ Owner
- ☐ Contractor
- ☐ Sign/Barricade co.
- ☐ Other _____

THIS TRAFFIC CONTROL PLAN IS NOT VALID UNLESS AN APPLICABLE AGENCY PERMIT OR APPROVAL IS ATTACHED/AFFIXED.

PERMIT APPROVED
By: _____
DATE: _____

*SUBJECT TO LOCAL AGENCY REQUIREMENTS

SEE ATTACHED SHEET(S) OR REFERENCE STANDARD DRAWING(S) THAT MAY BE APPLICABLE

TRAFFIC CONTROL PLAN
COVER SHEET

APPENDIX "A"
SAN DIEGO REGIONAL STANDARD

DRAWING NUMBER TC-5

DRAWING NUMBER TC-6

SIDE OF ROAD WORK AREA

TWO LANE TRAFFIC CONTROL WITHOUT CENTERLINE

APPENDIX "A"
SAN DIEGO REGIONAL STANDARD

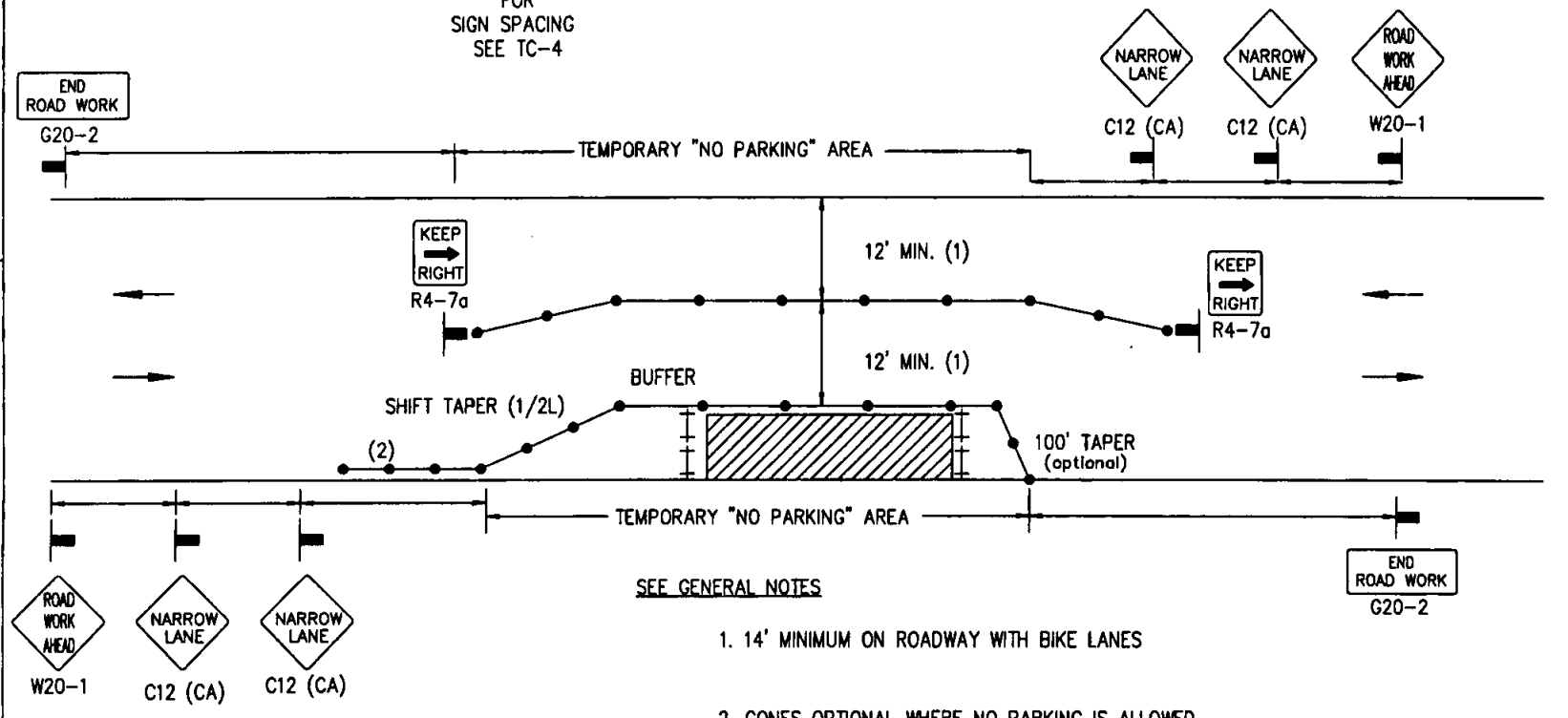

SEE GENERAL NOTES

1. 14' MINIMUM ON ROADWAY WITH BIKE LANES

2. CONES OPTIONAL WHERE NO PARKING IS ALLOWED

LEGEND

● CONE ⊢⊣ BARRICADE ▶ FLAGGER ▬ SIGN ▨ FLASHING ARROW SIGN ▨ WORK AREA ⇄ TRAFFIC DIRECTION

AGENCY ENGINEER'S COMMENTS

AGENCY USE

APPLICANT USE

SUBMITTED BY:
NAME
COMPANY
ADDRESS
PHONE

POSTED SPEED LIMIT	APPROACH SPEED	TAPER LENGTH	SPACING OF CONES	SIGN SPACING	BUFFER LENGTH

GENERAL NOTES

See TC-4 for sign spacing, spacing of cones, taper and buffer lengths

For hours of darkness, change cones to vertical barricades with steady burn lights.

This plan DOES NOT apply to signalized or multi-way stop intersections. Consult the local jurisdiction when preparing Traffic Control PLans near these intersections.

This plan MAY NOT apply when the work areas affect bike lanes, sidewalks, pedestrian access and curved or narrow roadways. Consult the approving agency when preparing the Traffic Control Plan or these areas.

Nothing cotained on this drawing shall prevent local jurisdictions from modifying, changing or adopting new specifications deemed necessary. Criteria for position, location and use of Traffic Control Devices is solely for the purpose of guidance to assist in the set up of the Traffic Control Plans.

TC-5 is required for all Traffic Control PLans.

Revision	By	Approved	Date
ORIGINAL DRAWING	CRH		4/27/06

Revision	By	Approved	Date
ORIGINAL	DRAWING CRH	[illegible]	4/27/06 4/06

SIDE OF ROAD WORK AREA

TWO LANE TRAFFIC CONTROL WITH CENTERLINE

APPENDIX "A"
SAN DIEGO REGIONAL STANDARD

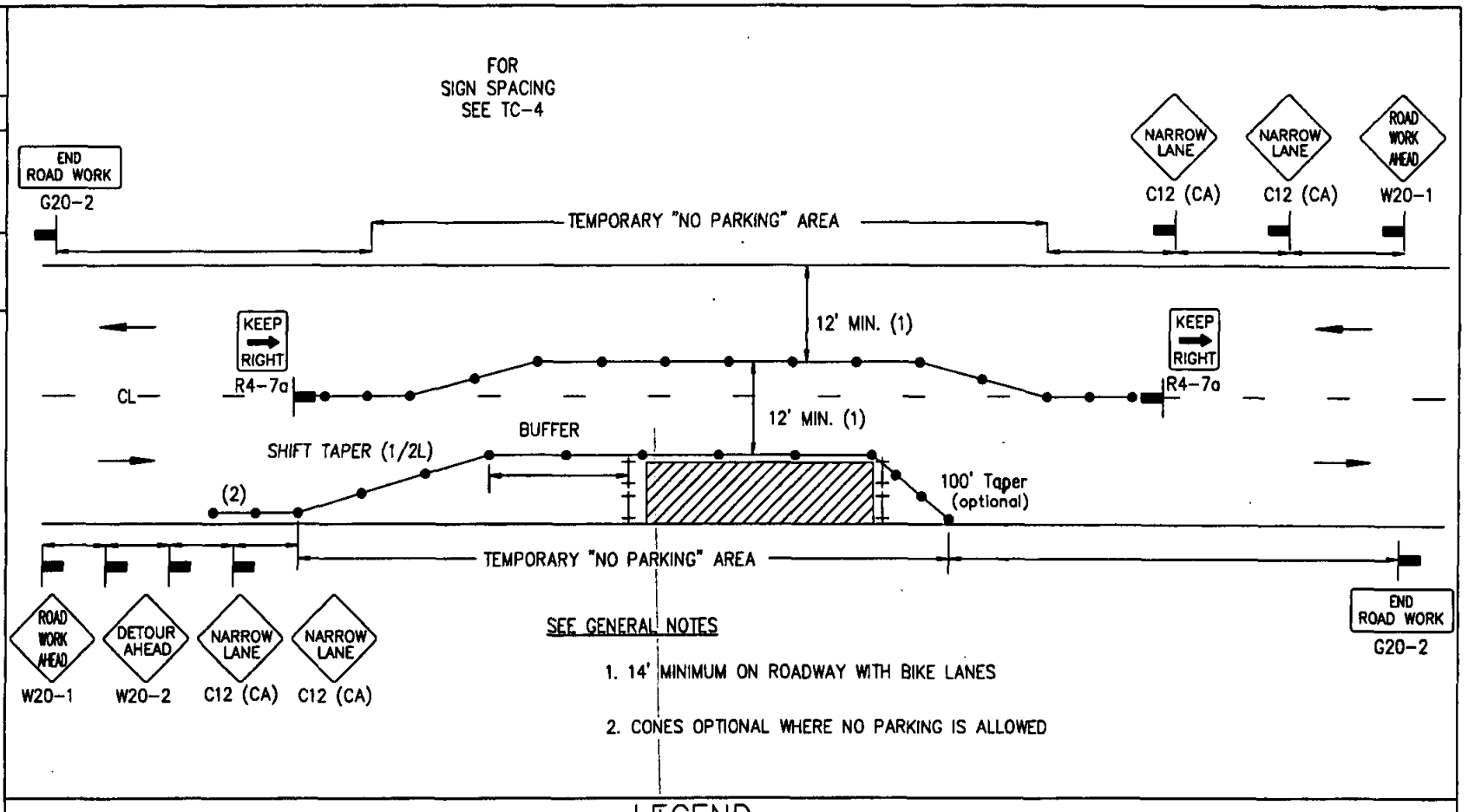

SEE GENERAL NOTES

1. 14' MINIMUM ON ROADWAY WITH BIKE LANES
2. CONES OPTIONAL WHERE NO PARKING IS ALLOWED

LEGEND

● CONE ⊢⊣ BARRICADE FLAGGER SIGN FLASHING ARROW SIGN WORK AREA TRAFFIC DIRECTION

AGENCY ENGINEER'S COMMENTS

AGENCY USE

SUBMITTED BY:
NAME
COMPANY
ADDRESS
PHONE

APPLICANT USE

POSTED SPEED LIMIT	APPROACH SPEED	TAPER LENGTH	SPACING OF CONES	SIGN SPACING	BUFFER LENGTH

GENERAL NOTES

See TC-4 for sign spacing, spacing of cones, and taper and buffer lengths

For hours of darkness, change cones to vertical barricades with steady burn lights.

This plan DOES NOT apply to signalized or multi-way stop intersections. Consult the local jurisdiction when preparing Traffic Control PLans near these intersections.

This plan MAY NOT apply when the work areas affect bike lanes, sidewalks, pedestrian access and curved or narrow roadways. Consult the approving agency when preparing the Traffic Control Plan or these areas.

Nothing contained on this drawing shall prevent local jurisdictions from modifying, changing or adopting new specifications deemed necessary. Criteria for position, location and use of Traffic Control Devices is solely for the purpose of guidance to assist in the set up of the Traffic Control Plans.

TC-5 is required for all Traffic Control PLans.

DRAWING NUMBER TC-7

DRAWING NUMBER TC-8

CENTER OF ROAD WORK AREA

TWO LANE TRAFFIC CONTROL

APPENDIX "A"
SAN DIEGO REGIONAL STANDARD

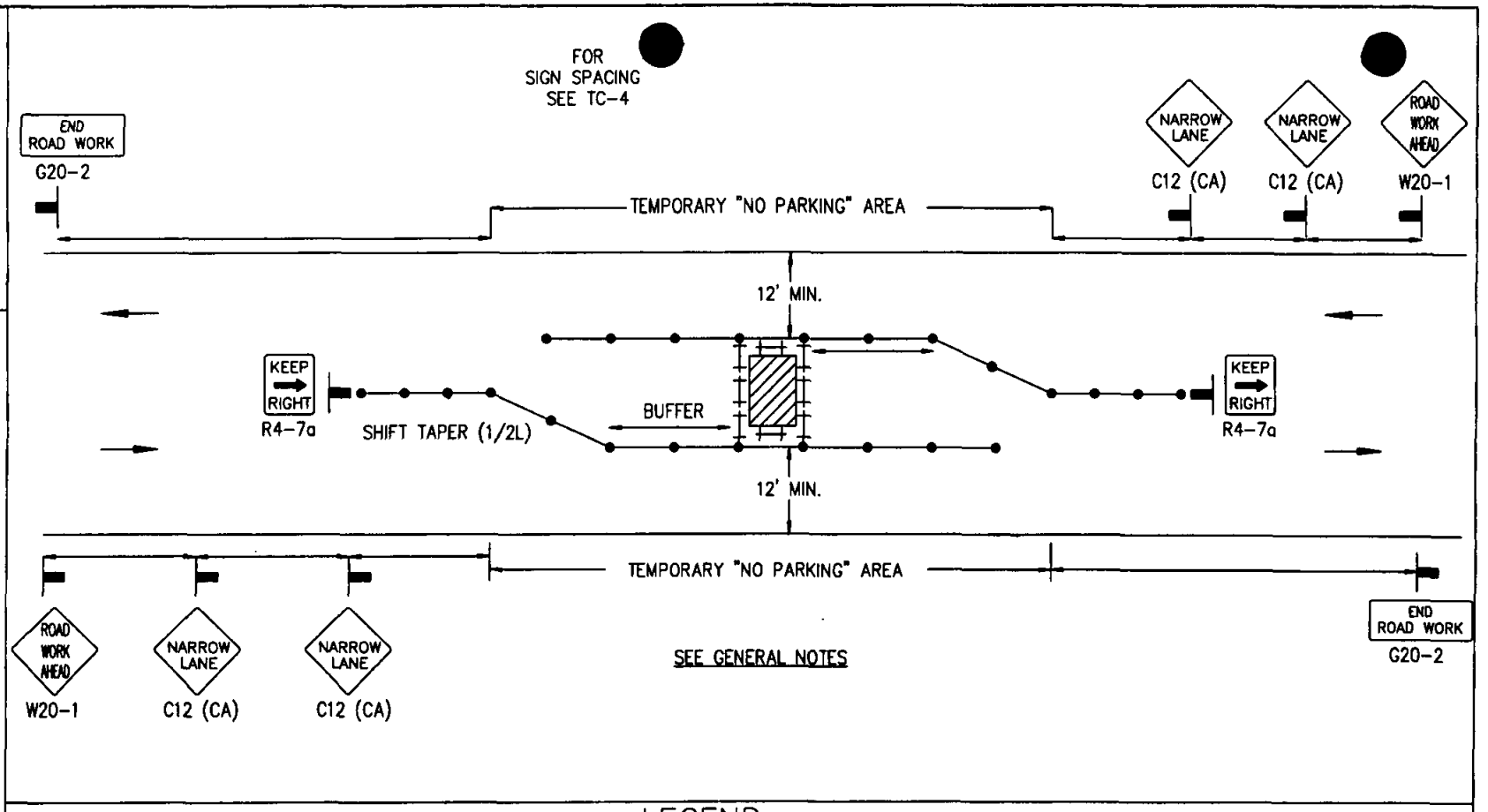

LEGEND

● CONE ⊢⊣ BARRICADE ▶ FLAGGER ▬ SIGN ☒ FLASHING ARROW SIGN ▨ WORK AREA ⇄ TRAFFIC DIRECTION

AGENCY ENGINEER'S COMMENTS

AGENCY USE

POSTED SPEED LIMIT	APPROACH SPEED	TAPER LENGTH	SPACING OF CONES	SIGN SPACING	BUFFER LENGTH

GENERAL NOTES

See TC-4 for sign spacing, spacing of cones, and taper and buffer lengths.

For hours of darkness, change cones to vertical barricades with steady burn lights.

This plan DOES NOT apply to signalized or multi-way stop intersections. Consult the local jurisdiction when preparing Traffic Control PLans near these intersections.

This plan MAY NOT apply when the work areas affect bike lanes, sidewalks, pedestrian access and curved or narrow roadways. Consult the approving agency when preparing the Traffic Control Plan or these areas.

Nothing contained on this drawing shall prevent local jurisdictions from modifying, changing or adopting new specifications deemed necessary. Criteria for position, location and use of Traffic Control Devices is solely for the purpose of guidance to assist in the set up of the Traffic Control Plans.

TC-5 is required for all Traffic Control PLans.

APPLICANT USE

SUBMITTED BY:
NAME
COMPANY
ADDRESS
PHONE

Revision	By	Approved	Date
ORIGINAL DRAWING	CRH	[illegible]	4/27/06

Revision	By	Approved	Date
ORIGINAL	DRAWING CRH	[illegible]	4/27/06 4/06

SIDE OF ROAD WORK AREA

TWO LANE TRAFFIC CONTROL WITH FLAGGERS

APPENDIX "A"
SAN DIEGO REGIONAL STANDARD

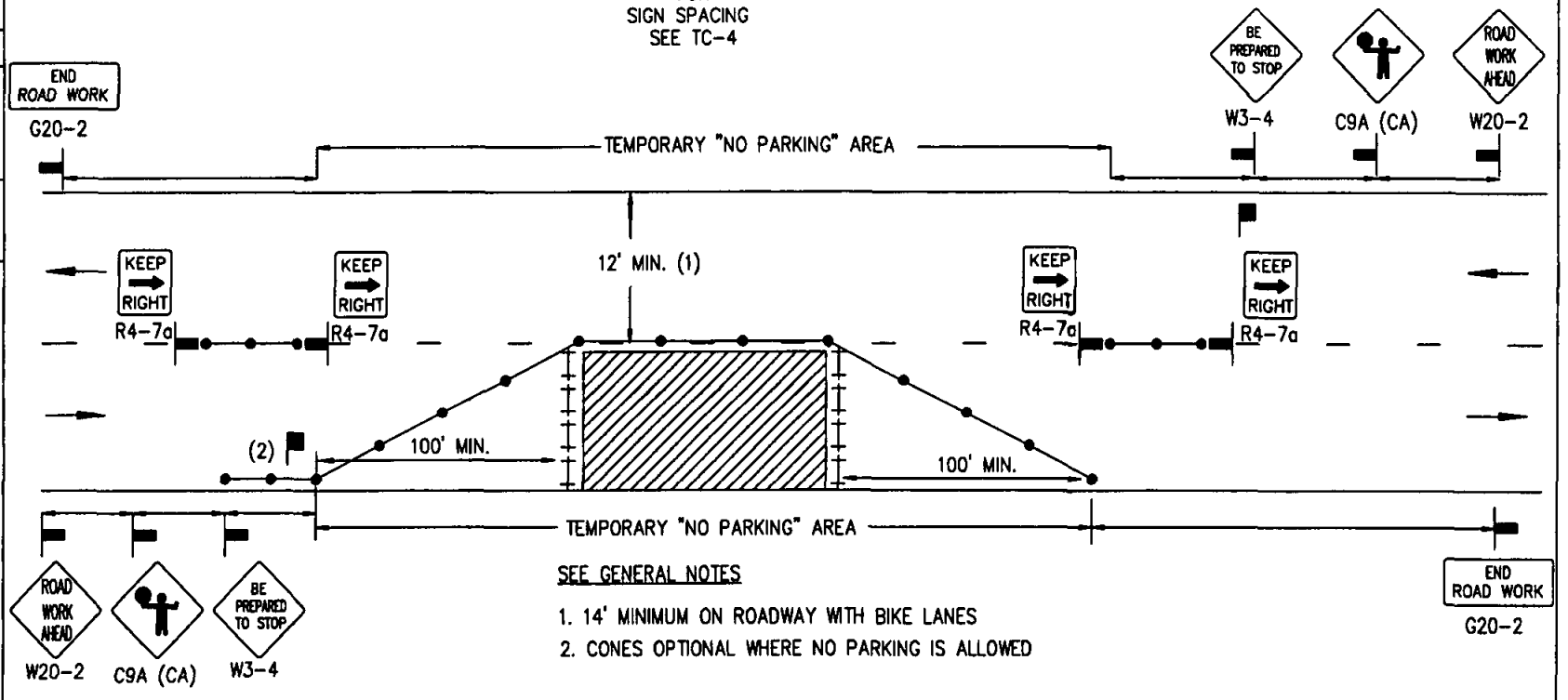

SEE GENERAL NOTES

1. 14' MINIMUM ON ROADWAY WITH BIKE LANES
2. CONES OPTIONAL WHERE NO PARKING IS ALLOWED

EYE CONTACT MUST BE MAINTAINED BETWEEN FLAGGERS OR USE 2-WAY COMMUNICATION

LEGEND

● CONE ⊢⊣ BARRICADE FLAGGER SIGN FLASHING ARROW SIGN WORK AREA TRAFFIC DIRECTION

AGENCY ENGINEER'S COMMENTS

AGENCY USE

SUBMITTED BY:
NAME
COMPANY
ADDRESS
PHONE

APPLICANT USE

POSTED SPEED LIMIT	APPROACH SPEED	TAPER LENGTH	SPACING OF CONES	SIGN SPACING	BUFFER LENGTH

GENERAL NOTES

See TC-4 for sign spacing, spacing of cones, and taper and buffer lengths.

For hours of darkness, change cones to vertical barricades with steady burn lights.

This plan DOES NOT apply to signalized or multi-way stop intersections. Consult the local jurisdiction when preparing Traffic Control PLans near these intersections.

This plan MAY NOT apply when the work areas affect bike lanes, sidewalks, pedestrian access and curved or narrow roadways. Consult the approving agency when preparing the Traffic Control Plan or these areas.

Nothing contained on this drawing shall prevent local jurisdictions from modifying, changing or adopting new specifications deemed necessary. Criteria for position, location and use of Traffic Control Devices is solely for the purpose of guidance to assist in the set up of the Traffic Control Plans.

TC-5 is required for all Traffic Control PLans.

DRAWING NUMBER TC-9

DRAWING NUMBER TC-10

APPENDIX "A"
SAN DIEGO REGIONAL STANDARD

SIDE OF ROAD WORK AREA

MULTILANE TRAFFIC CONTROL WITH CENTERLINE
RIGHT LANE TRAFFIC CLOSURE - ONE LANE

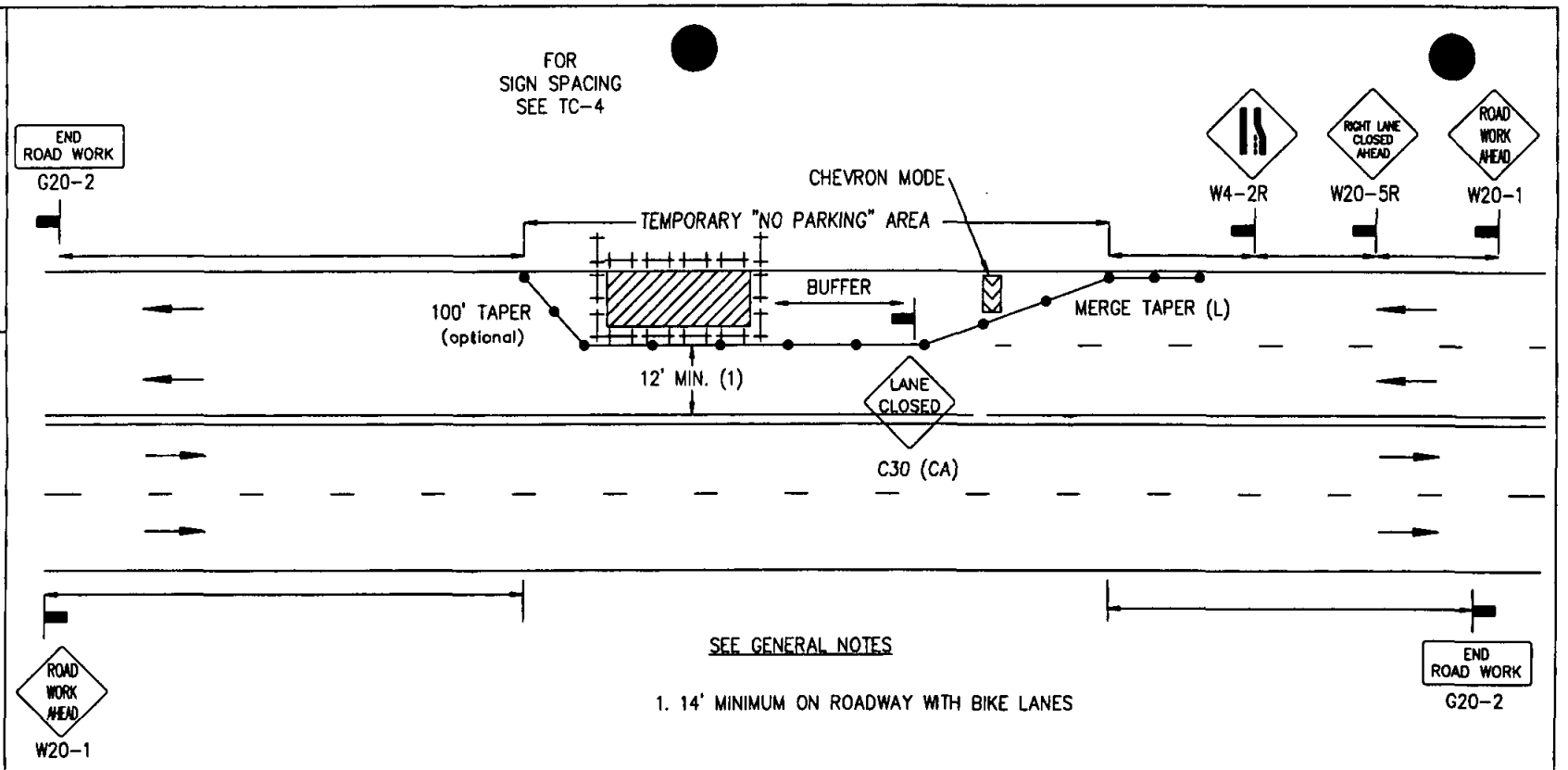

SEE GENERAL NOTES

1. 14' MINIMUM ON ROADWAY WITH BIKE LANES

LEGEND

● CONE ⊢⊣ BARRICADE ▶ FLAGGER ▬ SIGN ▨ FLASHING ARROW SIGN ▨ WORK AREA ⇄ TRAFFIC DIRECTION

AGENCY ENGINEER'S COMMENTS

AGENCY USE

POSTED SPEED LIMIT	APPROACH SPEED	TAPER LENGTH	SPACING OF CONES	SIGN SPACING	BUFFER LENGTH

GENERAL NOTES

See TC-4 for sign spacing, spacing of cones, and taper and buffer lengths.

For hours of darkness, change cones to vertical barricades with steady burn lights.

This plan DOES NOT apply to signalized or multi-way stop intersections. Consult the local jurisdiction when preparing Traffic Control PLans near these intersections.

This plan MAY NOT apply when the work areas affect bike lanes, sidewalks, pedestrian access and curved or narrow roadways. Consult the approving agency when preparing the Traffic Control Plan or these areas.

Nothing contained on this drawing shall prevent local jurisdictions from modifying, changing or adopting new specifications deemed necessary. Criteria for position, location and use of Traffic Control Devices is solely for the purpose of guidance to assist in the set up of the Traffic Control Plans.

TC-5 is required for all Traffic Control PLans.

APPLICANT USE

SUBMITTED BY:
NAME
COMPANY
ADDRESS
PHONE

Revision	By	Approved	Date
ORIGINAL DRAWING	CRH		4/06
			4/27/06

Revision	By	Approved	Date
ORIGINAL	DRAWING CRH	[illegible]	4/06 4/27/06

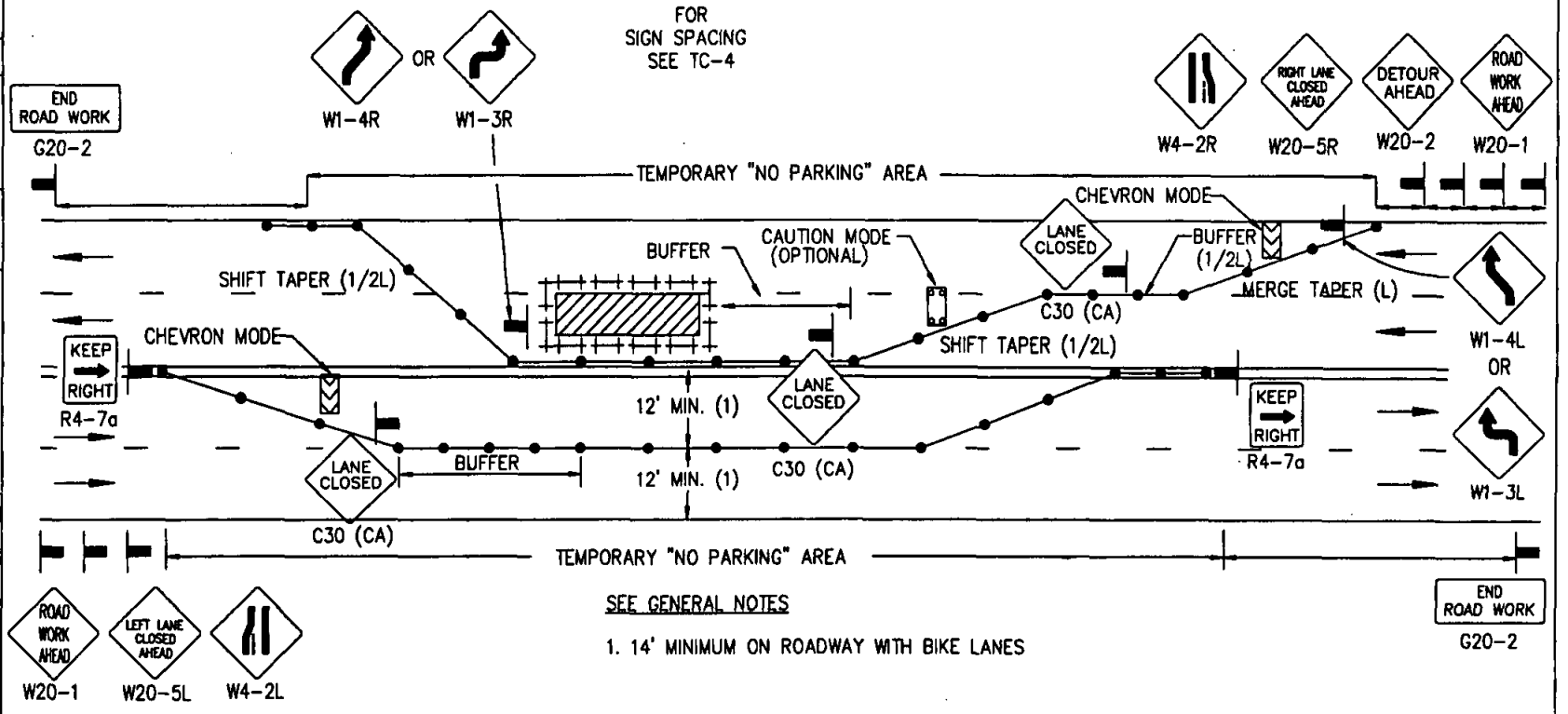

SEE GENERAL NOTES

1. 14' MINIMUM ON ROADWAY WITH BIKE LANES

LEGEND

● CONE ⊢⊣ BARRICADE FLAGGER SIGN FLASHING ARROW SIGN WORK AREA TRAFFIC DIRECTION

AGENCY ENGINEER'S COMMENTS

AGENCY USE

SUBMITTED BY:
NAME
COMPANY
ADDRESS
PHONE

APPLICANT USE

POSTED SPEED LIMIT	APPROACH SPEED	TAPER LENGTH	SPACING OF CONES	SIGN SPACING	BUFFER LENGTH

GENERAL NOTES

See TC-4 for sign spacing, spacing of cones, and taper and buffer lengths.

For hours of darkness, change cones to vertical barricades with steady burn lights.

This plan DOES NOT apply to signalized or multi-way stop intersections. Consult the local jurisdiction when preparing Traffic Control PLans near these intersections.

This plan MAY NOT apply when the work areas affect bike lanes, sidewalks, pedestrian access and curved or narrow roadways. Consult the approving agency when preparing the Traffic Control Plan or these areas.

Nothing contained on this drawing shall prevent local jurisdictions from modifying, changing or adopting new specifications deemed necessary. Criteria for position, location and use of Traffic Control Devices is solely for the purpose of guidance to assist in the set up of the Traffic Control Plans.

TC-5 is required for all Traffic Control PLans.

APPENDIX "A"
SAN DIEGO REGIONAL STANDARD

SIDE OF ROAD WORK AREA

MULTILANE TRAFFIC CONTROL WITH CENTERLINE
RIGHT TRAFFIC LANE CLOSURE - TWO LANES

DRAWING NUMBER TC-11

DRAWING NUMBER TC-12

CENTER OF ROAD WORK AREA

MULTILANE TRAFFIC CONTROL WITH CENTERLINE
LEFT TRAFFIC LANE CLOSURE - ONE LANE

APPENDIX "A"
SAN DIEGO REGIONAL STANDARD

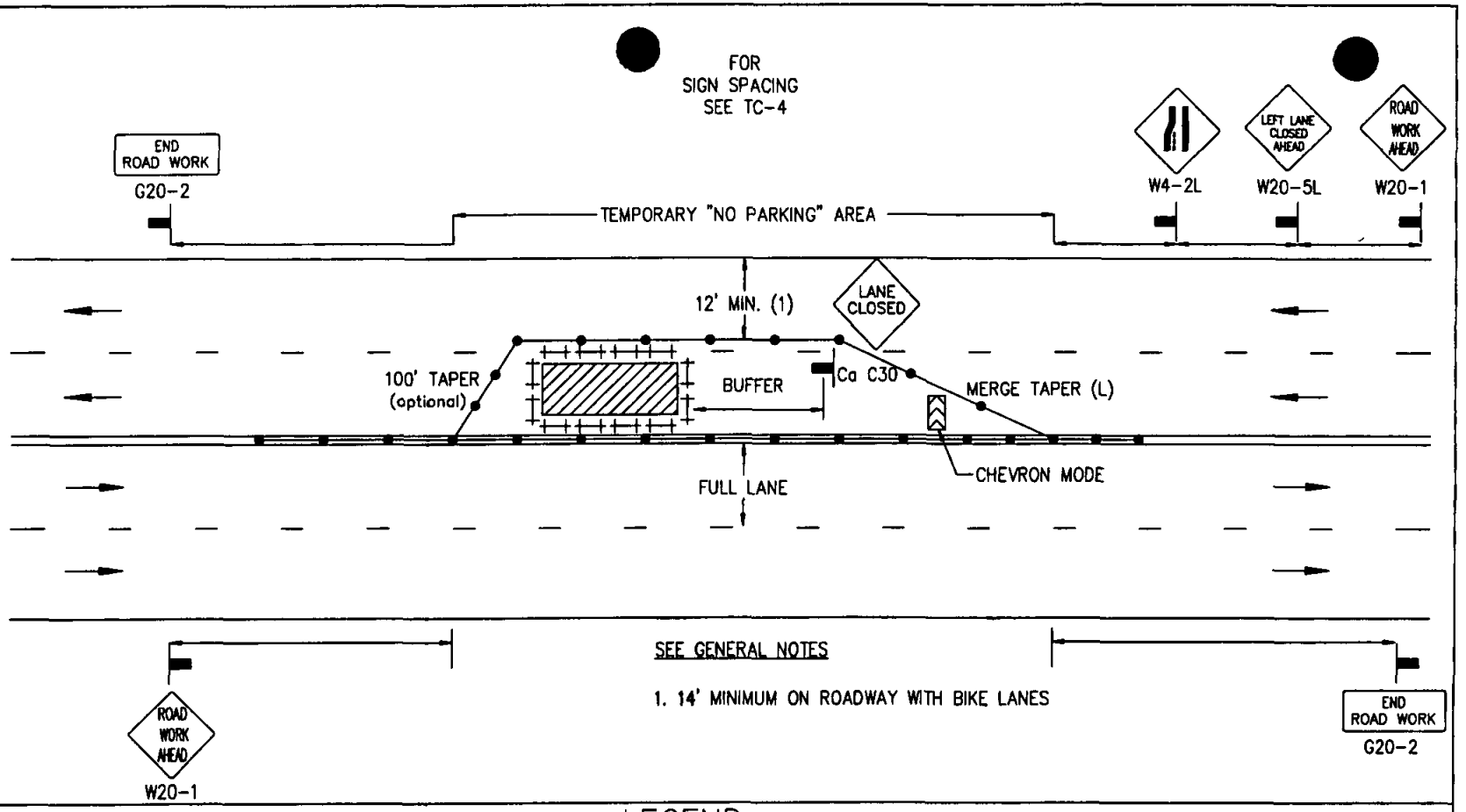

SEE GENERAL NOTES

1. 14' MINIMUM ON ROADWAY WITH BIKE LANES

LEGEND

● CONE ⊢⊣ BARRICADE FLAGGER SIGN FLASHING ARROW SIGN WORK AREA TRAFFIC DIRECTION

AGENCY ENGINEER'S COMMENTS

AGENCY USE

POSTED SPEED LIMIT	APPROACH SPEED	TAPER LENGTH	SPACING OF CONES	SIGN SPACING	BUFFER LENGTH

GENERAL NOTES

See TC-4 for sign spacing, spacing of cones, and taper and buffer lengths.

For hours of darkness, change cones to vertical barricades with steady burn lights.

This plan DOES NOT apply to signalized or multi-way stop intersections. Consult the local jurisdiction when preparing Traffic Control PLans near these intersections.

This plan MAY NOT apply when the work areas affect bike lanes, sidewalks, pedestrian access and curved or narrow roadways. Consult the approving agency when preparing the Traffic Control Plan or these areas.

Nothing contained on this drawing shall prevent local jurisdictions from modifying, changing or adopting new specifications deemed necessary. Criteria for position, location and use of Traffic Control Devices is solely for the purpose of guidance to assist in the set up of the Traffic Control Plans.

TC-5 is required for all Traffic Control PLans.

APPLICANT USE

SUBMITTED BY:
NAME
COMPANY
ADDRESS
PHONE

Revision	By	Approved	Date
ORIGINAL DRAWING	CRH	[illegible]	4/06
			4/27/06

Revision	By	Approved	Date
ORIGINAL	DRAWING CRH		4/06
			4/27/06

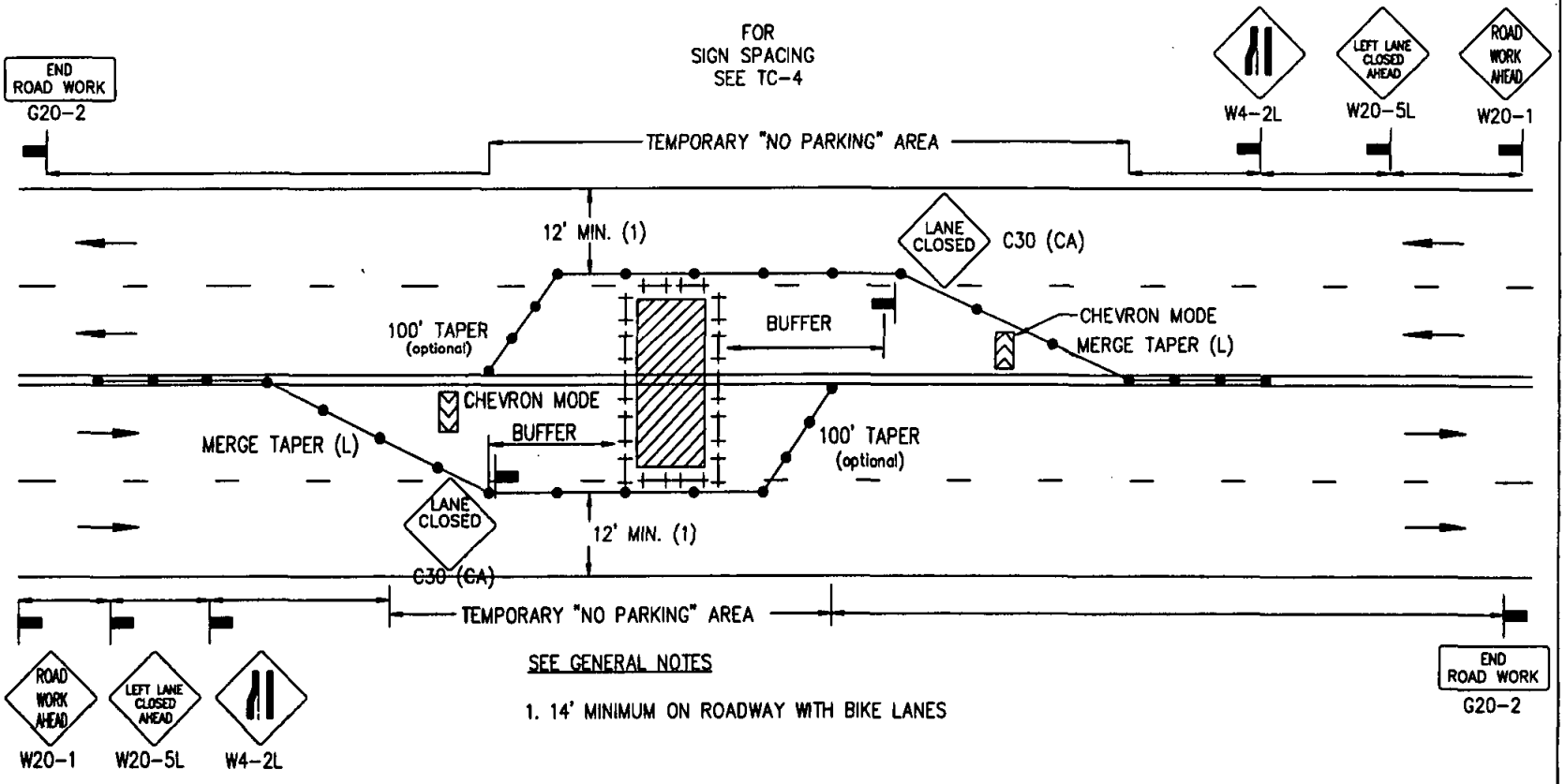

SEE GENERAL NOTES

1. 14' MINIMUM ON ROADWAY WITH BIKE LANES

LEGEND

● CONE ⊢⊣ BARRICADE ⚑ FLAGGER ▬ SIGN ☑ FLASHING ARROW SIGN ▨ WORK AREA ⇄ TRAFFIC DIRECTION

AGENCY ENGINEER'S COMMENTS

AGENCY USE

SUBMITTED BY:
NAME
COMPANY
ADDRESS
PHONE

APPLICANT USE

POSTED SPEED LIMIT	APPROACH SPEED	TAPER LENGTH	SPACING OF CONES	SIGN SPACING	BUFFER LENGTH

GENERAL NOTES

See TC-4 for sign spacing, spacing of cones, and taper and buffer lengths.

For hours of darkness, change cones to vertical barricades with steady burn lights.

This plan DOES NOT apply to signalized or multi-way stop intersections. Consult the local jurisdiction when preparing Traffic Control PLans near these intersections.

This plan MAY NOT apply when the work areas affect bike lanes, sidewalks, pedestrian access and curved or narrow roadways. Consult the approving agency when preparing the Traffic Control Plan or these areas.

Nothing contained on this drawing shall prevent local jurisdictions from modifying, changing or adopting new specifications deemed necessary. Criteria for position, location and use of Traffic Control Devices is solely for the purpose of guidance to assist in the set up of the Traffic Control Plans.

TC-5 is required for all Traffic Control PLans.

APPENDIX "A"
SAN DIEGO REGIONAL STANDARD

CENTER OF ROAD WORK AREA

MULTILANE TRAFFIC CONTROL WITH CENTERLINE
LEFT TRAFFIC LANE CLOSURE - TWO LANES

DRAWING NUMBER TC-13

DRAWING NUMBER TC-14

SIDE OF ROAD WORK AREA

MULTILANE TRAFFIC CONTROL WITH TWO WAY LEFT TURN
RIGHT LANE TRAFFIC CLOSURE - ONE LANE

APPENDIX "A"
SAN DIEGO REGIONAL STANDARD

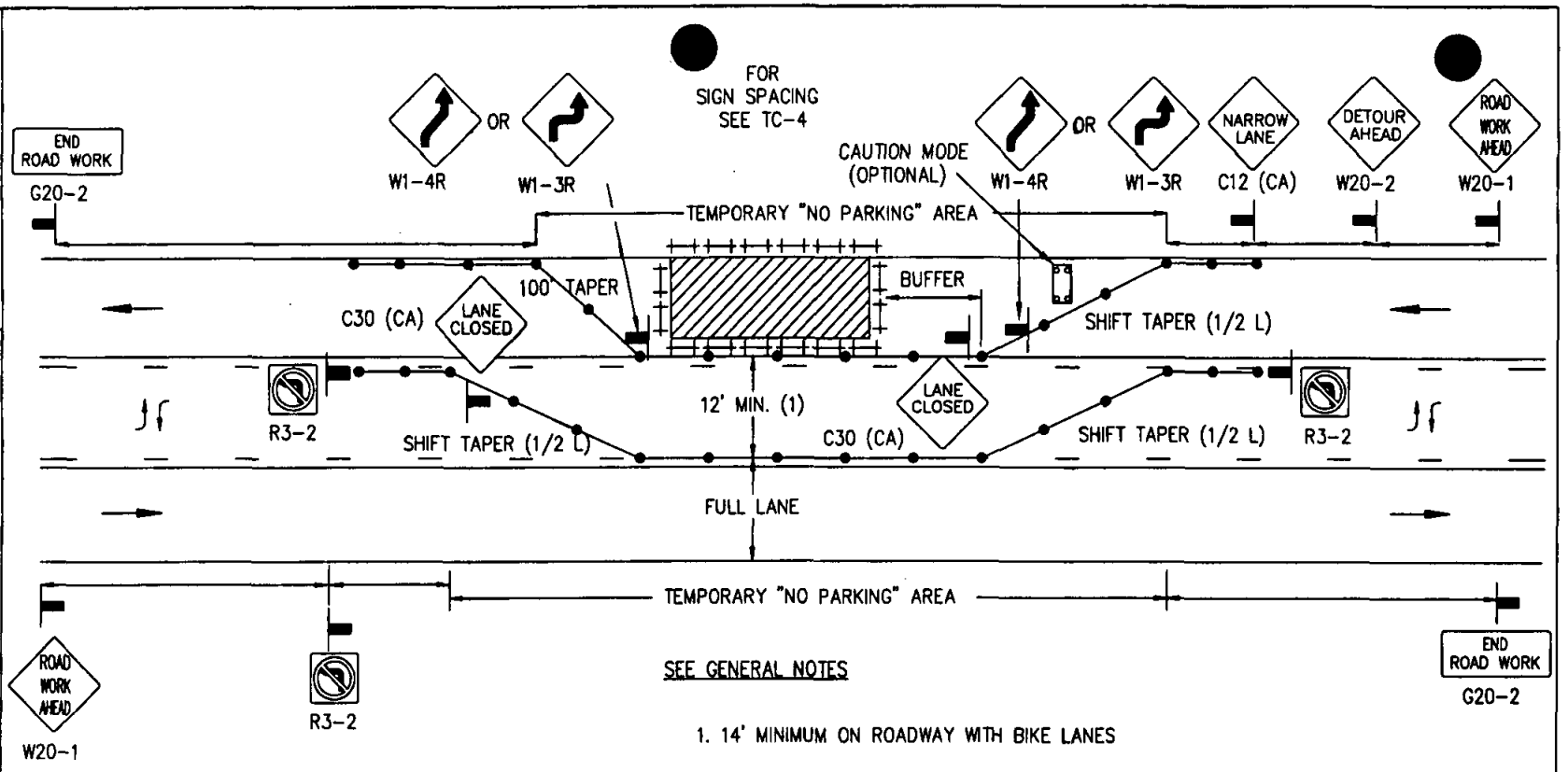

SEE GENERAL NOTES

1. 14' MINIMUM ON ROADWAY WITH BIKE LANES

LEGEND

● CONE ⊢⊣ BARRICADE ▶ FLAGGER ▬ SIGN ▯ FLASHING ARROW SIGN ▨ WORK AREA ⇄ TRAFFIC DIRECTION

AGENCY ENGINEER'S COMMENTS

AGENCY USE

POSTED SPEED LIMIT	APPROACH SPEED	TAPER LENGTH	SPACING OF CONES	SIGN SPACING	BUFFER LENGTH

GENERAL NOTES

See tc-4 for sign spacing, spacing for cones, and taper and buffer lengths.

For hours of darkness, change cones to vertical barricades with steady burn lights.

This plan DOES NOT apply to signalized or multi-way stop intersections. Consult the local jurisdiction when preparing Traffic Control PLans near these intersections.

This plan MAY NOT apply when the work areas affect bike lanes, sidewalks, pedestrian access and curved or narrow roadways. Consult the approving agency when preparing the Traffic Control Plan or these areas.

Nothing contained on this drawing shall prevent local jurisdictions from modifying, changing or adopting new specifications deemed necessary. Criteria for position, location and use of Traffic Control Devices is solely for the purpose of guidance to assist in the set up of the Traffic Control Plans.

TC-5 is required for all Traffic Control PLans.

APPLICANT USE

SUBMITTED BY:
NAME
COMPANY
ADDRESS
PHONE

Revision	By	Approved	Date
ORIGINAL	DRAWING	CRH	4/06
			4/27/06

Revision	By	Approved	Date
ORIGINAL	DRAWING CRH		4/06
		4/27/06	

APPENDIX "A"
SAN DIEGO REGIONAL STANDARD

CENTER OF ROAD WORK AREA

MULTILANE TRAFFIC CONTROL WITH CENTERLINE
LEFT TRAFFIC LANE CLOSURE - ONE LANE

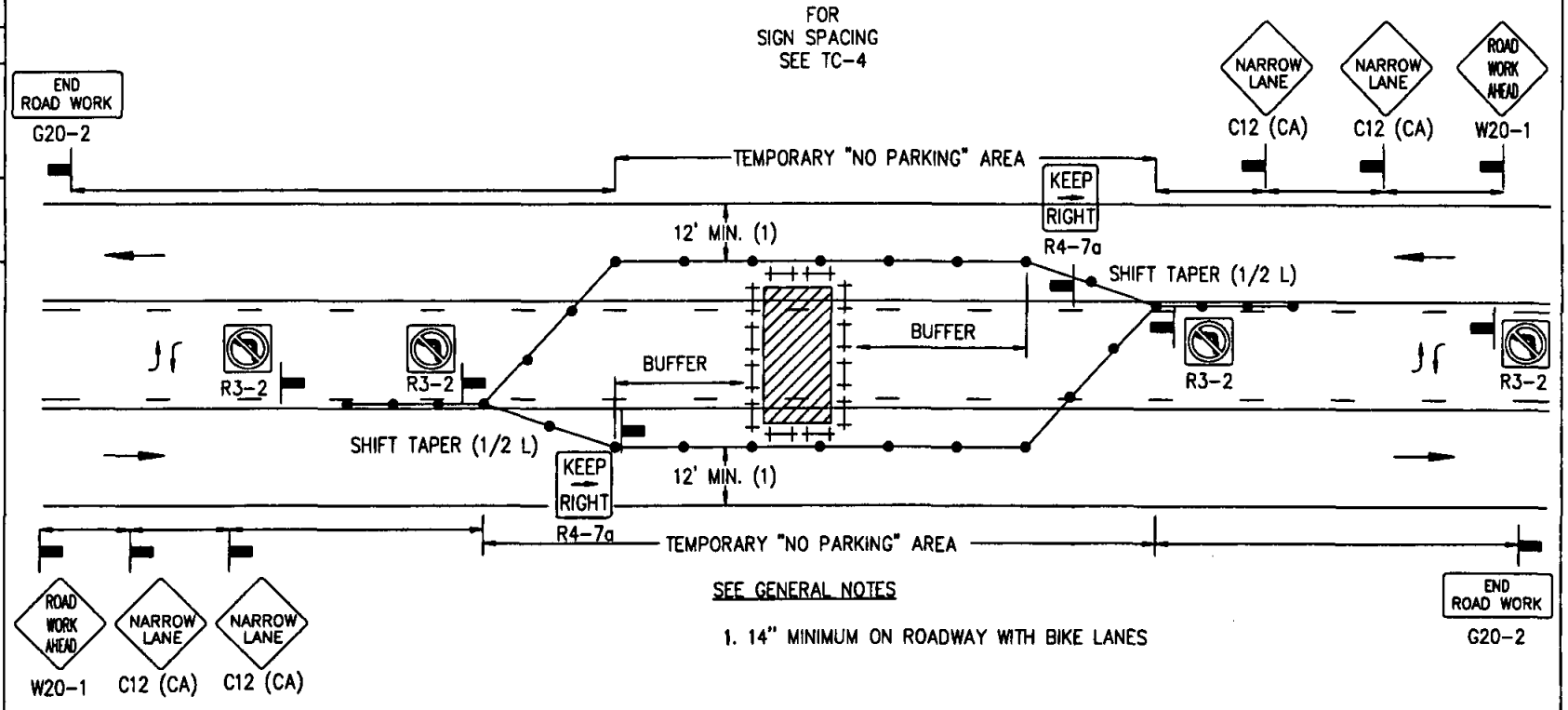

SEE GENERAL NOTES

1. 14" MINIMUM ON ROADWAY WITH BIKE LANES

LEGEND

- CONE
- BARRICADE
- FLAGGER
- SIGN
- FLASHING ARROW SIGN
- WORK AREA
- TRAFFIC DIRECTION

AGENCY ENGINEER'S COMMENTS

AGENCY USE

SUBMITTED BY:
NAME
COMPANY
ADDRESS
PHONE

APPLICANT USE

POSTED SPEED LIMIT	APPROACH SPEED	TAPER LENGTH	SPACING OF CONES	SIGN SPACING	BUFFER LENGTH

GENERAL NOTES

See TC-4 for sign spacing, spacing of cones, taper and buffer lengths.

For hours of darkness, change cones to vertical barricades with steady burn lights.

This plan DOES NOT apply to signalized or multi-way stop intersections. Consult the local jurisdiction when preparing Traffic Control PLans near these intersections.

This plan MAY NOT apply when the work areas affect bike lanes, sidewalks, pedestrian access and curved or narrow roadways. Consult the approving agency when preparing the Traffic Control Plan or these areas.

Nothing contained on this drawing shall prevent local jurisdictions from modifying, changing or adopting new specifications deemed necessary. Criteria for position, location and use of Traffic Control Devices is solely for the purpose of guidance to assist in the set up of the Traffic Control Plans.

TC-5 is required for all Traffic Control PLans.

DRAWING NUMBER TC-15

DRAWING NUMBER TC-16

SIDE OF ROAD WORK AREA

MULTILANE TRAFFIC CONTROL WITH TWO WAY LEFT TURN
RIGHT TRAFFIC LANE CLOSURE - ONE LANE

APPENDIX "A"
SAN DIEGO REGIONAL STANDARD

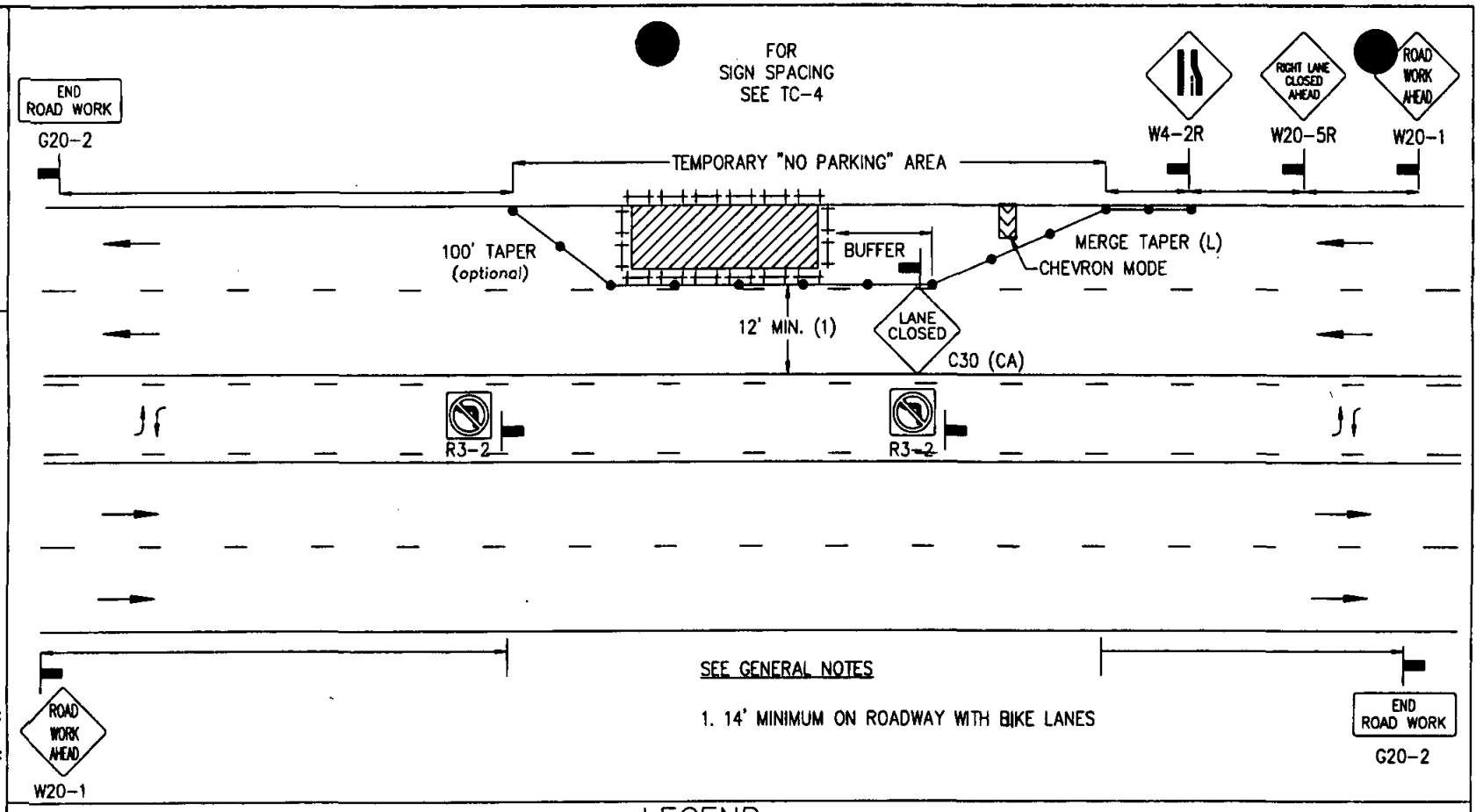

SEE GENERAL NOTES

1. 14' MINIMUM ON ROADWAY WITH BIKE LANES

LEGEND

● CONE ⊢⊣ BARRICADE ▶ FLAGGER ▬ SIGN ☒ FLASHING ARROW SIGN ▨ WORK AREA ⇄ TRAFFIC DIRECTION

AGENCY ENGINEER'S COMMENTS

AGENCY USE

POSTED SPEED LIMIT	APPROACH SPEED	TAPER LENGTH	SPACING OF CONES	SIGN SPACING	BUFFER LENGTH

GENERAL NOTES

See TC-4 for sign spacing, spacing of cones, and taper and buffer lengths.

For hours of darkness, change cones to vertical barricades with steady burn lights.

This plan DOES NOT apply to signalized or multi-way stop intersections. Consult the local jurisdiction when preparing Traffic Control PLans near these intersections.

This plan MAY NOT apply when the work areas affect bike lanes, sidewalks, pedestrian access and curved or narrow roadways. Consult the approving agency when preparing the Traffic Control Plan or these areas.

Nothing contained on this drawing shall prevent local jurisdictions from modifying, changing or adopting new specifications deemed necessary. Criteria for position, location and use of Traffic Control Devices is solely for the purpose of guidance to assist in the set up of the Traffic Control Plans.

TC-5 is required for all Traffic Control PLans.

APPLICANT USE

SUBMITTED BY:
NAME
COMPANY
ADDRESS
PHONE

Revision	By	Approved	Date
ORIGINAL	DRAWING CRH		4/06
			4/27/06

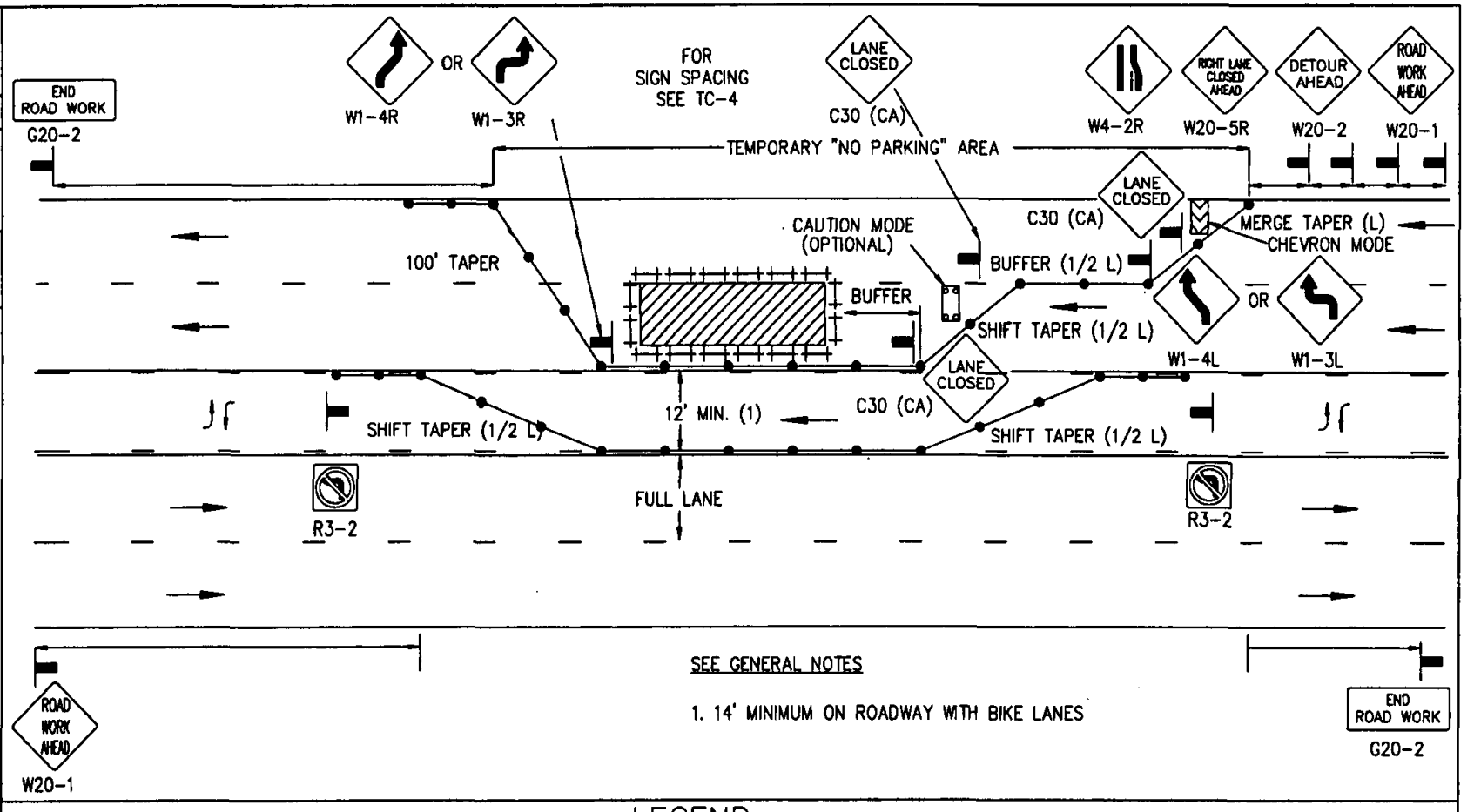

SEE GENERAL NOTES

1. 14' MINIMUM ON ROADWAY WITH BIKE LANES

LEGEND

● CONE ⊢⊣ BARRICADE ▚ FLAGGER ▬ SIGN ▯ ▯ FLASHING ARROW SIGN ▨ WORK AREA ⇄ TRAFFIC DIRECTION

AGENCY ENGINEER'S COMMENTS

AGENCY USE

SUBMITTED BY:
NAME
COMPANY
ADDRESS
PHONE

APPLICANT USE

POSTED SPEED LIMIT	APPROACH SPEED	TAPER LENGTH	SPACING OF CONES	SIGN SPACING	BUFFER LENGTH

GENERAL NOTES

See TC-4 for sign spacing, spacing of cones, taper and buffer lengths.

For hours of darkness, change cones to vertical barricades with steady burn lights.

This plan DOES NOT apply to signalized or multi-way stop intersections. Consult the local jurisdiction when preparing Traffic Control PLans near these intersections.

This plan MAY NOT apply when the work areas affect bike lanes, sidewalks, pedestrian access and curved or narrow roadways. Consult the approving agency when preparing the Traffic Control Plan or these areas.

Nothing contained on this drawing shall prevent local jurisdictions from modifying, changing or adopting new specifications deemed necessary. Criteria for position, location and use of Traffic Control Devices is solely for the purpose of guidance to assist in the set up of the Traffic Control Plans.

TC-5 is required for all Traffic Control PLans.

Revision	By	Approved	Date
DRAWING ORIGINAL	CRH		4/06
			4/27/06

APPENDIX "A"
SAN DIEGO REGIONAL STANDARD

CENTER OF ROAD WORK AREA

MULTILANE TRAFFIC CONTROL WITH TWO WAY LEFT TURN
RIGHT TRAFFIC LANE CLOSURE - TWO LANES

DRAWING NUMBER TC-17

DRAWING NUMBER TC-18

APPENDIX "A"

SAN DIEGO REGIONAL STANDARD

SIDE OF ROAD WORK AREA

MULTILANE TRAFFIC CONTROL WITH TWO WAY LEFT TURN
RIGHT TRAFFIC LANE CLOSURE - THREE LANES

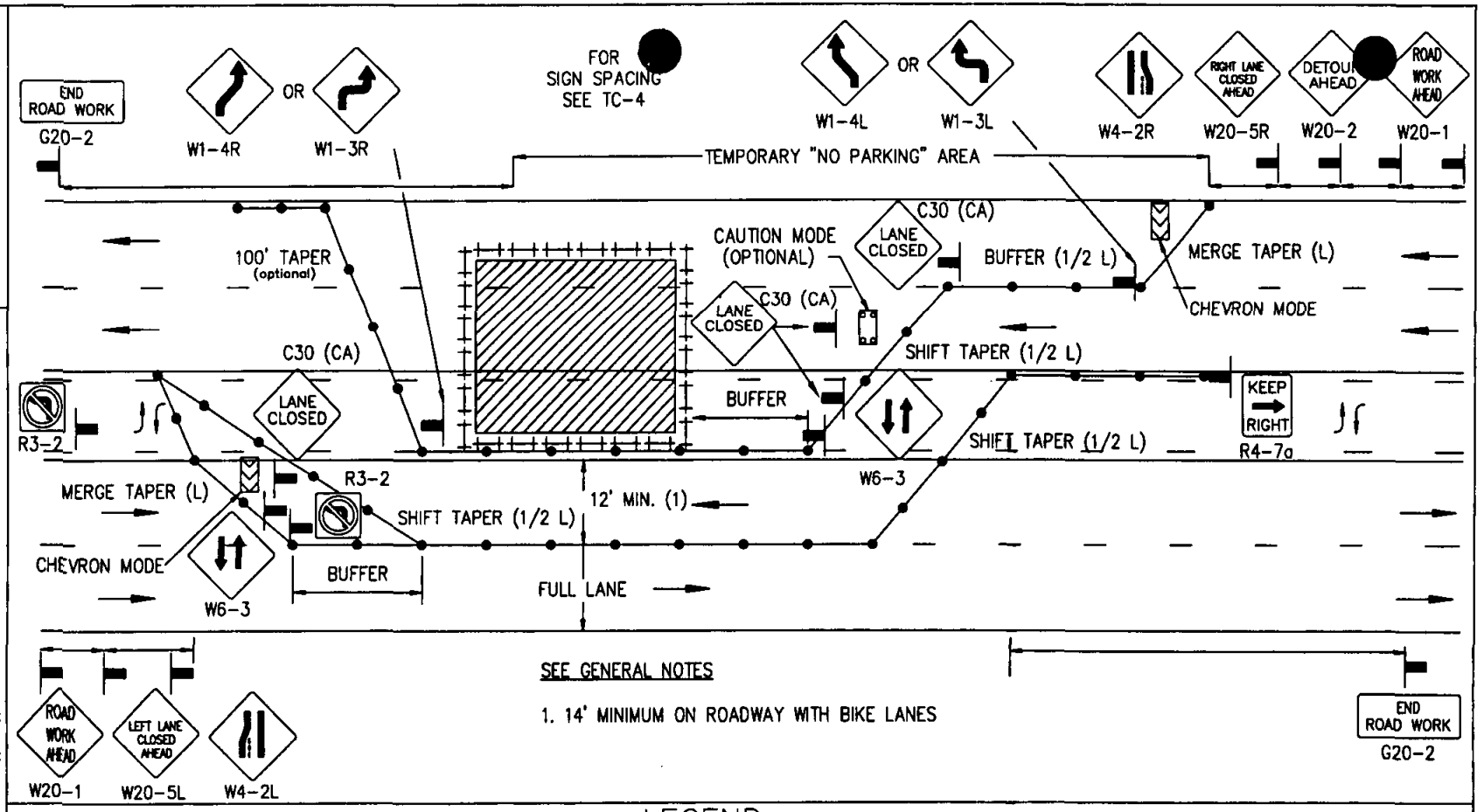

SEE GENERAL NOTES

1. 14' MINIMUM ON ROADWAY WITH BIKE LANES

LEGEND

● CONE ⊢⊣ BARRICADE FLAGGER SIGN FLASHING ARROW SIGN WORK AREA TRAFFIC DIRECTION

AGENCY ENGINEER'S COMMENTS

AGENCY USE

APPLICANT USE

SUBMITTED BY:
NAME
COMPANY
ADDRESS
PHONE

POSTED SPEED LIMIT	APPROACH SPEED	TAPER LENGTH	SPACING OF CONES	SIGN SPACING	BUFFER LENGTH

GENERAL NOTES

See TC-4 for sign spacing, spacing of cones, and taper and buffer lengths.

For hours of darkness, change cones to vertical barricades with steady burn lights.

This plan DOES NOT apply to signalized or multi-way stop intersections. Consult the local jurisdiction when preparing Traffic Control PLans near these intersections.

This plan MAY NOT apply when the work areas affect bike lanes, sidewalks, pedestrian access and curved or narrow roadways. Consult the approving agency when preparing the Traffic Control Plan or these areas.

Nothing contained on this drawing shall prevent local jurisdictions from modifying, changing or adopting new specifications deemed necessary. Criteria for position, location and use of Traffic Control Devices is solely for the purpose of guidance to assist in the set up of the Traffic Control Plans.

TC-5 is required for all Traffic Control PLans.

Revision	By	Approved	Date
ORIGINAL	DRAWING CRH		4/06
			4/27/06

Revision	By	Approved	Date
ORIGINAL DRAWING	CRH		4/06
			4/27/06

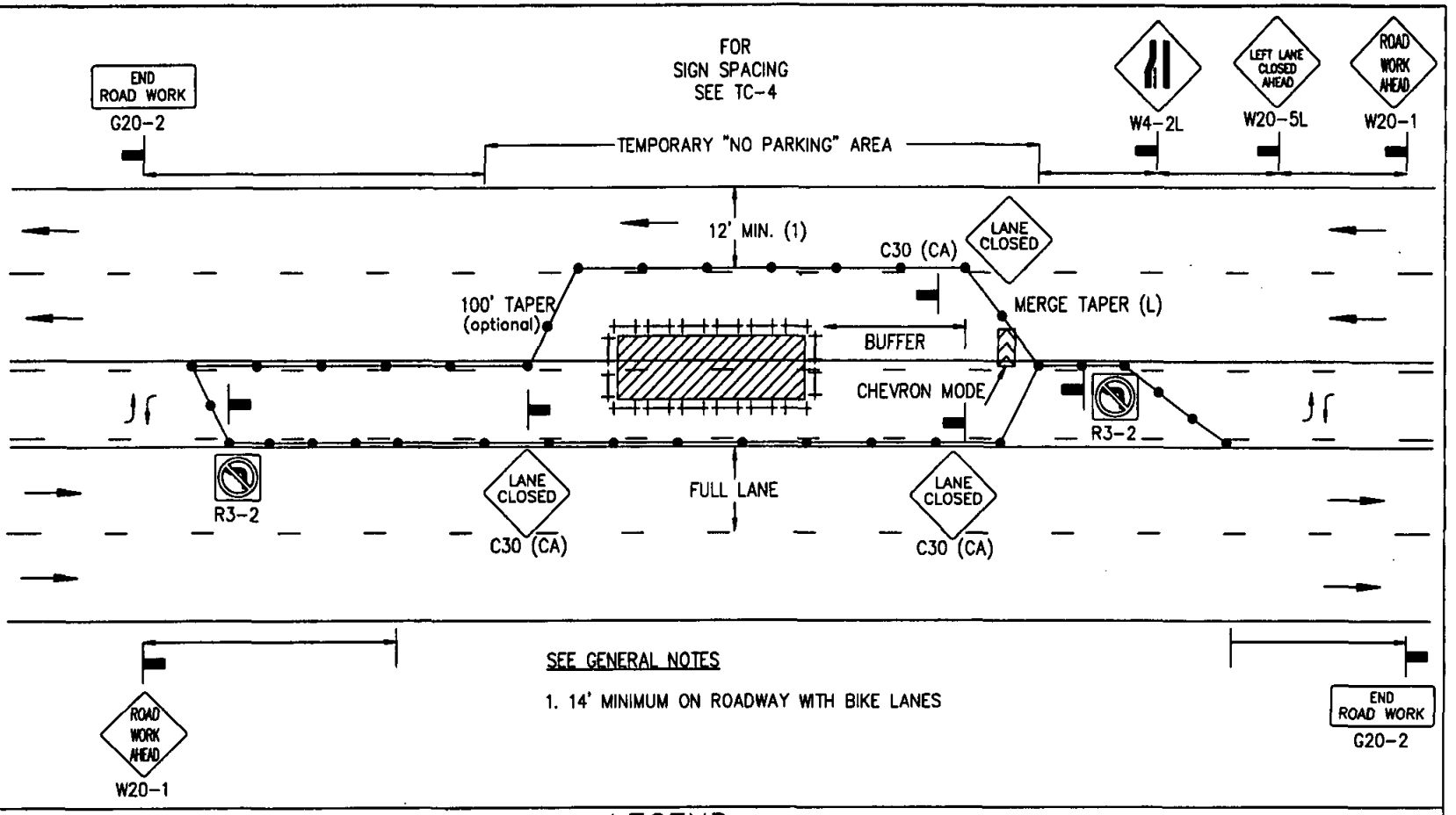

SEE GENERAL NOTES

1. 14' MINIMUM ON ROADWAY WITH BIKE LANES

LEGEND

● CONE ⊢⊣ BARRICADE FLAGGER SIGN FLASHING ARROW SIGN WORK AREA TRAFFIC DIRECTION

AGENCY ENGINEER'S COMMENTS

AGENCY USE

SUBMITTED BY:
NAME
COMPANY
ADDRESS
PHONE

APPLICANT USE

POSTED SPEED LIMIT	APPROACH SPEED	TAPER LENGTH	SPACING OF CONES	SIGN SPACING	BUFFER LENGTH

GENERAL NOTES

See TC-4 for sign spacing, spacing for cones, and taper and buffer lengths.

For hours of darkness, change cones to vertical barricades with steady burn lights.

This plan DOES NOT apply to signalized or multi-way stop intersections. Consult the local jurisdiction when preparing Traffic Control PLans near these intersections.

This plan MAY NOT apply when the work areas affect bike lanes, sidewalks, pedestrian access and curved or narrow roadways. Consult the approving agency when preparing the Traffic Control Plan or these areas.

Nothing contained on this drawing shall prevent local jurisdictions from modifying, changing or adopting new specifications deemed necessary. Criteria for position, location and use of Traffic Control Devices is solely for the purpose of guidance to assist in the set up of the Traffic Control Plans.

TC-5 is required for all Traffic Control PLans.

APPENDIX "A"
SAN DIEGO REGIONAL STANDARD

CENTER OF ROAD WORK AREA

MULTILANE TRAFFIC CONTROL WITH TWO WAY LEFT TURN
LEFT TRAFFIC LANE CLOSURE - TWO LANES

DRAWING NUMBER TC-19

DRAWING NUMBER TC-20

APPENDIX "A"
SAN DIEGO REGIONAL STANDARD
CENTER OF ROAD WORK AREA
MULTILANE TRAFFIC CONTROL WITH CENTERLINE
LEFT LANE TRAFFIC LANE CLOSURE - THREE LANES

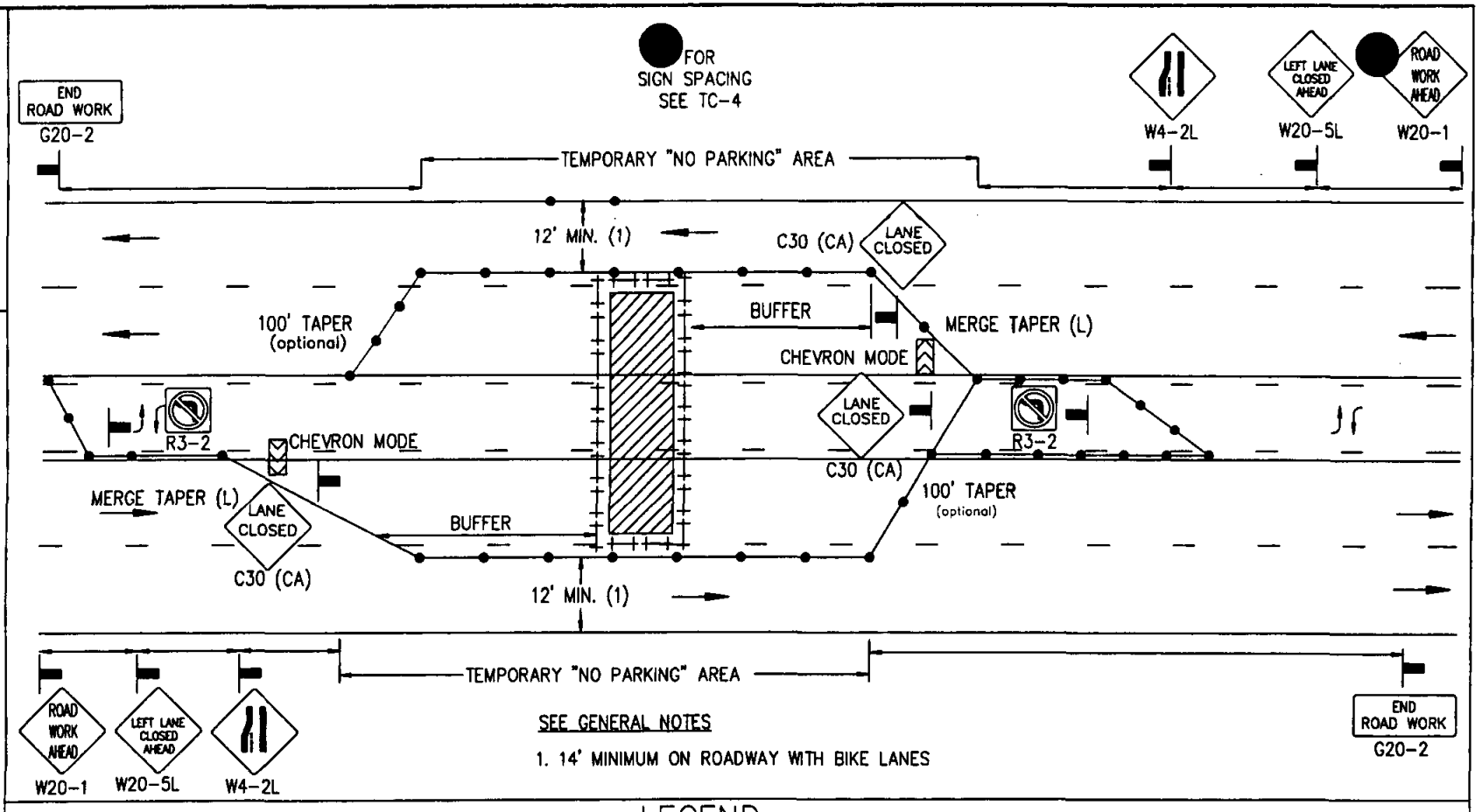

SEE GENERAL NOTES

1. 14' MINIMUM ON ROADWAY WITH BIKE LANES

LEGEND

● CONE ⊢⊣ BARRICADE FLAGGER SIGN FLASHING ARROW SIGN WORK AREA TRAFFIC DIRECTION

AGENCY ENGINEER'S COMMENTS

AGENCY USE

SUBMITTED BY:
NAME
COMPANY
ADDRESS
PHONE

APPLICANT USE

POSTED SPEED LIMIT	APPROACH SPEED	TAPER LENGTH	SPACING OF CONES	SIGN SPACING	BUFFER LENGTH

GENERAL NOTES

See TC-4 for sign spacing, spacing for cones, taper and buffer lengths.

For hours of darkness, change cones to vertical barricades with steady burn lights.

This plan DOES NOT apply to signalized or multi-way stop intersections. Consult the local jurisdiction when preparing Traffic Control PLans near these intersections.

This plan MAY NOT apply when the work areas affect bike lanes, sidewalks, pedestrian access and curved or narrow roadways. Consult the approving agency when preparing the Traffic Control Plan or these areas.

Nothing contained on this drawing shall prevent local jurisdictions from modifying, changing or adopting new specifications deemed necessary. Criteria for position, location and use of Traffic Control Devices is solely for the purpose of guidance to assist in the set up of the Traffic Control Plans.

TC-5 is required for all Traffic Control PLans.

Revision	By	Approved	Date
ORIGINAL DRAWING	CRH	[illegible]	4/06 4/27/06

Revision	By	Approved	Date
ORIGINAL	DRAWING CRH		4/06
			4/27/06

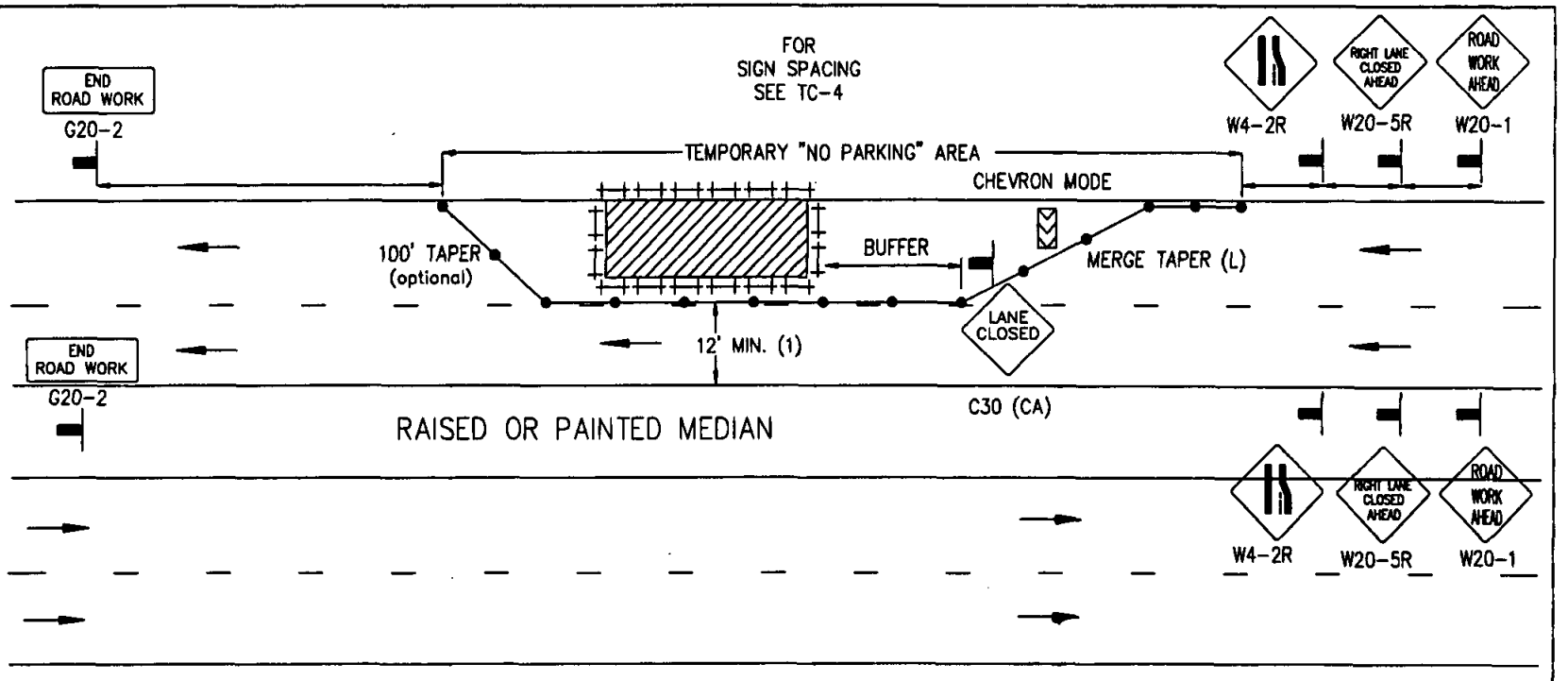

SEE GENERAL NOTES

1. 14' MINIMUM ON ROADWAY WITH BIKE LANES

LEGEND

● CONE ⊢⊣ BARRICADE ▶ FLAGGER ▬ SIGN ☒ FLASHING ARROW SIGN ▨ WORK AREA → TRAFFIC DIRECTION

AGENCY ENGINEER'S COMMENTS

AGENCY USE

POSTED SPEED LIMIT	APPROACH SPEED	TAPER LENGTH	SPACING OF CONES	SIGN SPACING	BUFFER LENGTH

GENERAL NOTES

See TC-4 for sign spacing, spacing of cones, taper and buffer lengths.

For hours of darkness, change cones to vertical barricades with steady burn lights.

This plan DOES NOT apply to signalized or multi-way stop intersections. Consult the local jurisdiction when preparing Traffic Control PLans near these intersections.

This plan MAY NOT apply when the work areas affect bike lanes, sidewalks, pedestrian access and curved or narrow roadways. Consult the approving agency when preparing the Traffic Control Plan or these areas.

Nothing contained on this drawing shall prevent local jurisdictions from modifying, *changing or adopting new specifications deemed necessary. Criteria for position,* location and use of Traffic Control Devices is solely for the purpose of guidance to assist in the set up of the Traffic Control Plans.

TC-5 is required for all Traffic Control PLans.

SUBMITTED BY:
NAME
COMPANY
ADDRESS
PHONE

APPLICANT USE

SIDE OF ROAD WORK AREA

MULTILANE TRAFFIC CONTROL WITH RAISED MEDIAN
RIGHT TRAFFIC LANE CLOSURE - ONE LANE

APPENDIX "A"
SAN DIEGO REGIONAL STANDARD

DRAWING NUMBER TC-21

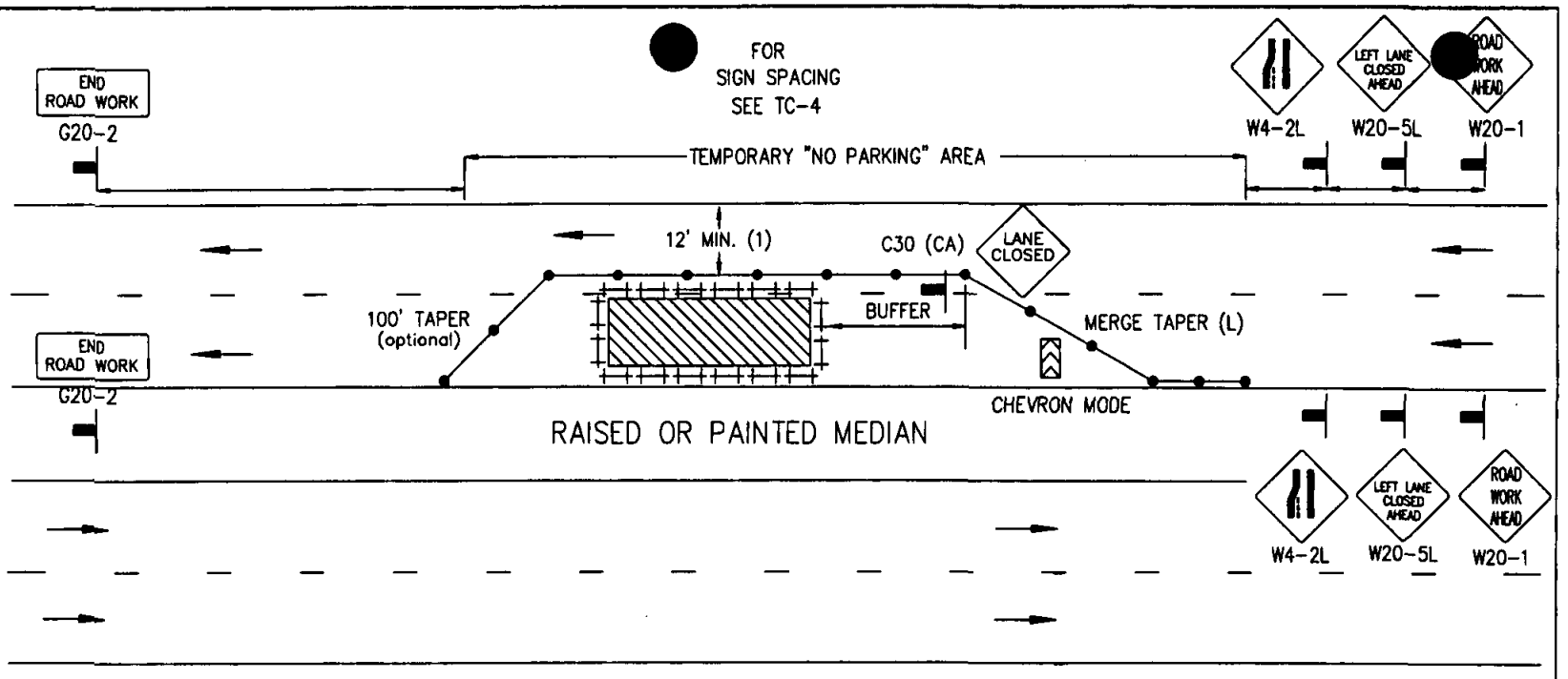

SEE GENERAL NOTES

1. 14' MINIMUM ON ROADWAY WITH BIKE LANES

LEGEND

● CONE ⊢⊣ BARRICADE FLAGGER SIGN FLASHING ARROW SIGN WORK AREA TRAFFIC DIRECTION

AGENCY ENGINEER'S COMMENTS

AGENCY USE

SUBMITTED BY:
NAME
COMPANY
ADDRESS
PHONE

APPLICANT USE

POSTED SPEED LIMIT	APPROACH SPEED	TAPER LENGTH	SPACING OF CONES	SIGN SPACING	BUFFER LENGTH

GENERAL NOTES

See TC-4 for sign spacing, spacing for cones, taper and buffer lengths.

For hours of darkness, change cones to vertical barricades with steady burn lights.

This plan DOES NOT apply to signalized or multi-way stop intersections. Consult the local jurisdiction when preparing Traffic Control PLans near these intersections.

This plan MAY NOT apply when the work areas affect bike lanes, sidewalks, pedestrian access and curved or narrow roadways. Consult the approving agency when preparing the Traffic Control Plan or these areas.

Nothing contained on this drawing shall prevent local jurisdictions from modifying, changing or adopting new specifications deemed necessary. Criteria for position, location and use of Traffic Control Devices is solely for the purpose of guidance to assist in the set up of the Traffic Control Plans.

TC-5 is required for all Traffic Control PLans.

DRAWING NUMBER TC-22

APPENDIX "A"
SAN DIEGO REGIONAL STANDARD

CENTER OF ROAD WORK AREA

MULTILANE TRAFFIC CONTROL WITH RAISED MEDIAN
LEFT LANE TRAFFIC LANE CLOSURE - ONE LANE

Revision	By	Approved	Date
DRAWING ORIGINAL	CRH		4/06
			4/27/06

Revision	By	Approved	Date
ORIGINAL	DRAWING CRH		4/06 4/27/06

SIDE OF ROAD WORK AREA

INTERSECTION TRAFFIC CONTROL

APPENDIX "A"
SAN DIEGO REGIONAL STANDARD

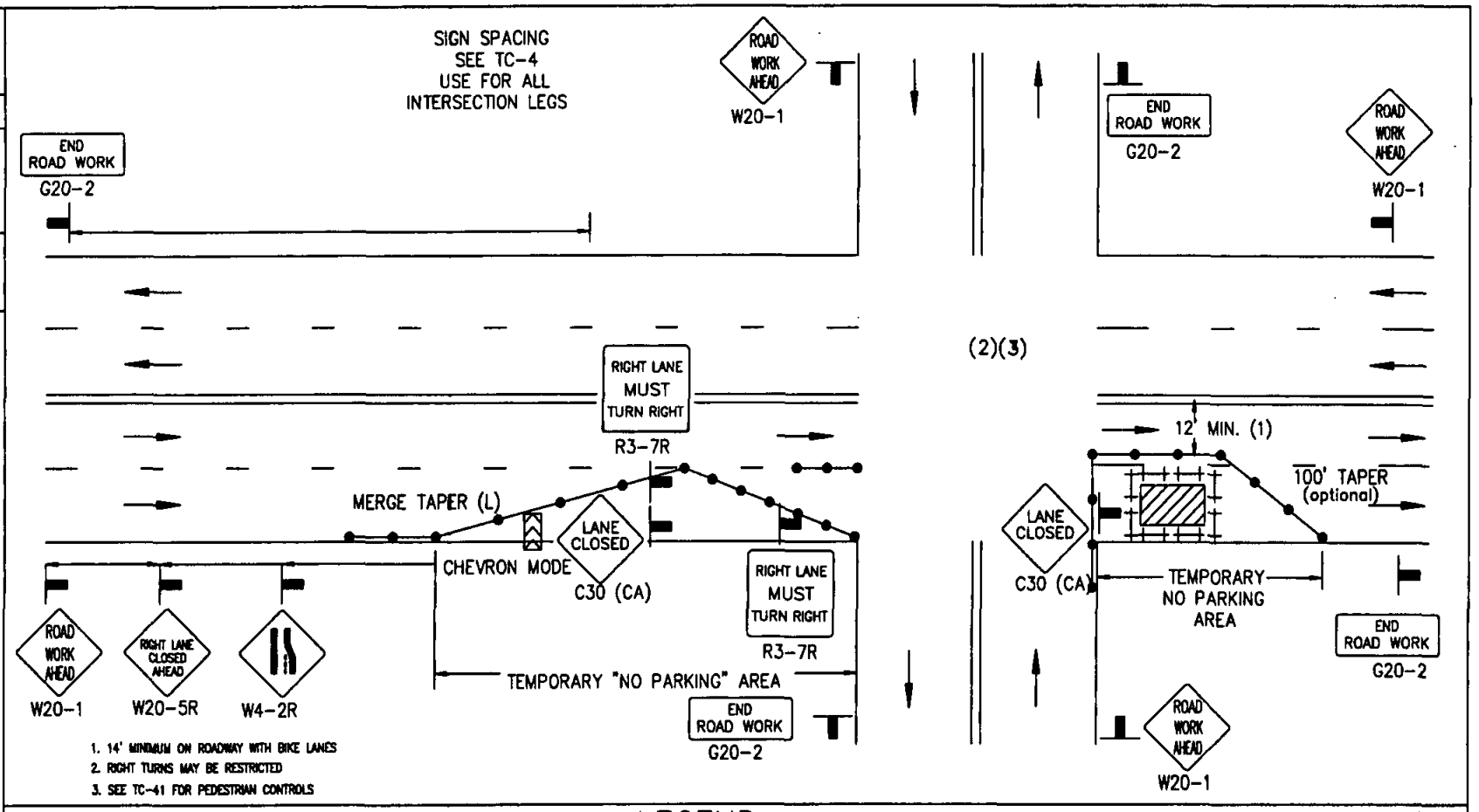

1. 14' MINIMUM ON ROADWAY WITH BIKE LANES
2. RIGHT TURNS MAY BE RESTRICTED
3. SEE TC-41 FOR PEDESTRIAN CONTROLS

LEGEND

● CONE ⊢⊣ BARRICADE ▶ FLAGGER ▬ SIGN ⊠ FLASHING ARROW SIGN ▨ WORK AREA ⇄ TRAFFIC DIRECTION

AGENCY ENGINEER'S COMMENTS

AGENCY USE

POSTED SPEED LIMIT	APPROACH SPEED	TAPER LENGTH	SPACING OF CONES	SIGN SPACING	BUFFER LENGTH

GENERAL NOTES

See TC-4 for sign spacing, spacing of cones, taper and buffer lengths.

For hours of darkness, change cones to vertical barricades with steady burn lights.

This plan MAY NOT apply to signalized or multi-way stop intersections. Consult the local jurisdiction when preparing Traffic Control PLans near these intersections.

This plan MAY NOT apply when the work areas affect bike lanes, sidewalks, pedestrian access and curved or narrow roadways. Consult the approving agency when preparing the Traffic Control Plan or these areas.

Nothing contained on this drawing shall prevent local jurisdictions from modifying, changing or adopting new specifications deemed necessary. Criteria for position, location and use of Traffic Control Devices is solely for the purpose of guidance to assist in the set up of the Traffic Control Plans.

TC-5 is required for all Traffic Control PLans.

SUBMITTED BY:
NAME
COMPANY
ADDRESS
PHONE

APPLICANT USE

DRAWING NUMBER TC-23

DRAWING NUMBER TC-24

SIDE OF ROAD WORK AREA

INTERSECTION TRAFFIC CONTROL

APPENDIX "A"
SAN DIEGO REGIONAL STANDARD

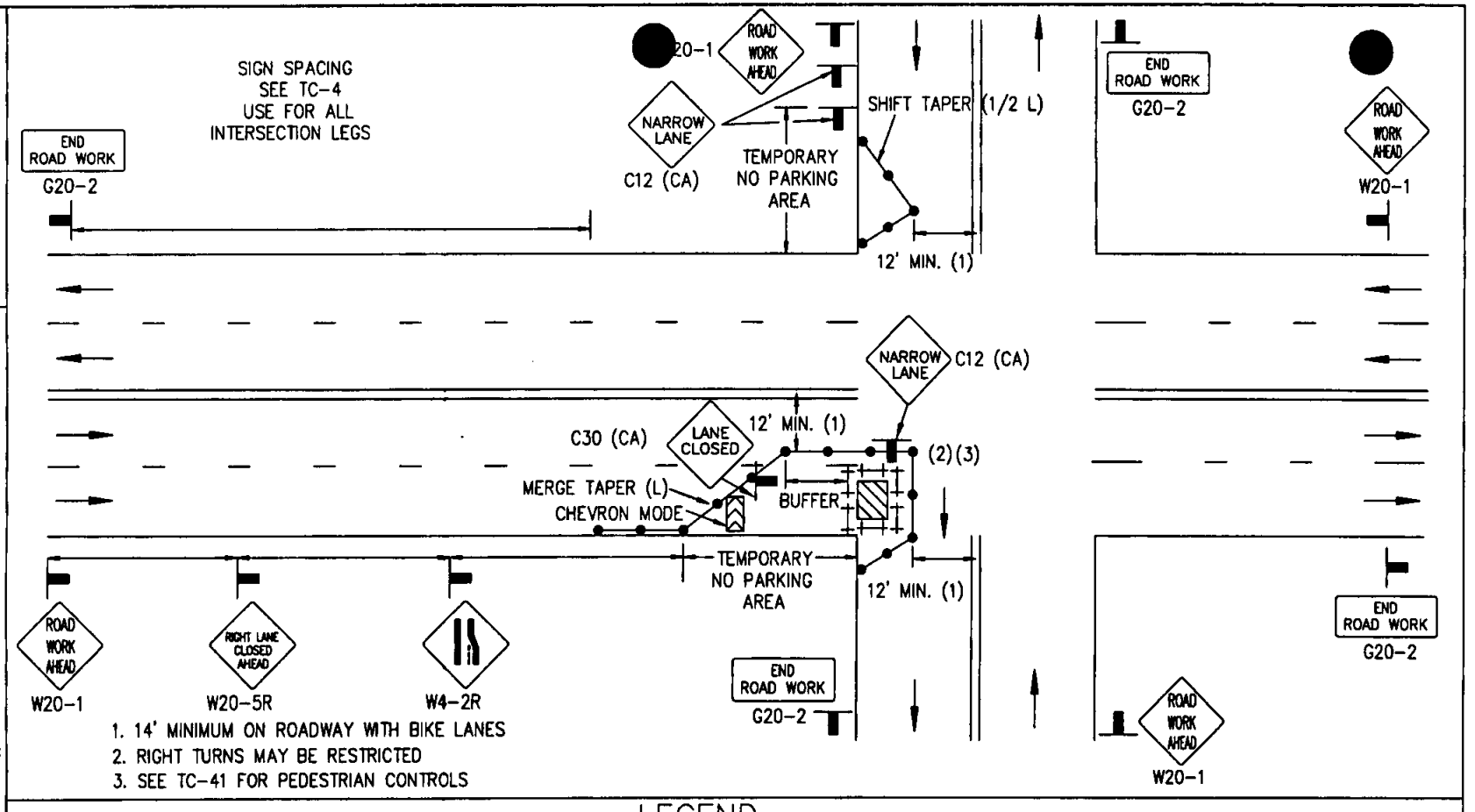

1. 14' MINIMUM ON ROADWAY WITH BIKE LANES
2. RIGHT TURNS MAY BE RESTRICTED
3. SEE TC-41 FOR PEDESTRIAN CONTROLS

LEGEND

● CONE ⊢⊣ BARRICADE ▶ FLAGGER ▬ SIGN ⊠ FLASHING ARROW SIGN ▨ WORK AREA ⟶ TRAFFIC DIRECTION

AGENCY ENGINEER'S COMMENTS

AGENCY USE

POSTED SPEED LIMIT	APPROACH SPEED	TAPER LENGTH	SPACING OF CONES	SIGN SPACING	BUFFER LENGTH

GENERAL NOTES

See TC-4 for sign spacing, spacing of cones, taper and buffer lengths.

For hours of darkness, change cones to vertical barricades with steady burn lights.

This plan MAY NOT apply to signalized or multi-way stop intersections. Consult the local jurisdiction when preparing Traffic Control PLans near these intersections.

This plan MAY NOT apply when the work areas affect bike lanes, sidewalks, pedestrian access and curved or narrow roadways. Consult the approving agency when preparing the Traffic Control Plan or these areas.

Nothing contained on this drawing shall prevent local jurisdictions from modifying, changing or adopting new specifications deemed necessary. Criteria for position, location and use of Traffic Control Devices is solely for the purpose of guidance to assist in the set up of the Traffic Control Plans.

TC-5 is required for all Traffic Control PLans.

APPLICANT USE

SUBMITTED BY:
NAME
COMPANY
ADDRESS
PHONE

Revision	By	Approved	Date
ORIGINAL	DRAWING CRH		4/06
		[illegible]	4/27/06

Revision	By	Approved	Date
ORIGINAL	DRAWING CRH	[illegible]	4/06 4/27/06

CENTER OF ROAD WORK AREA

INTERSECTION TRAFFIC CONTROL

APPENDIX "A"
SAN DIEGO REGIONAL STANDARD

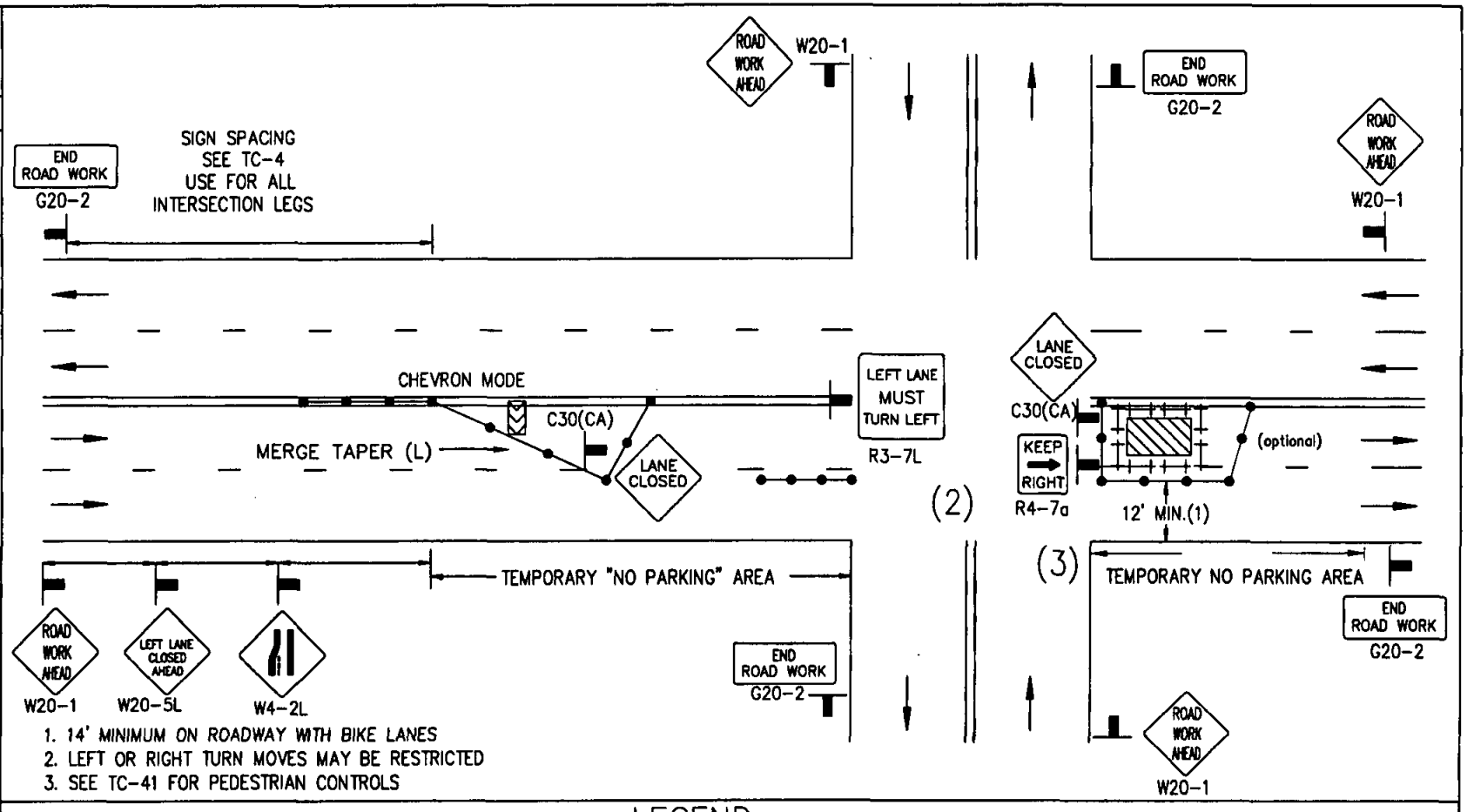

1. 14' MINIMUM ON ROADWAY WITH BIKE LANES
2. LEFT OR RIGHT TURN MOVES MAY BE RESTRICTED
3. SEE TC-41 FOR PEDESTRIAN CONTROLS

LEGEND

● CONE ⊢⊣ BARRICADE FLAGGER SIGN FLASHING ARROW SIGN WORK AREA TRAFFIC DIRECTION

AGENCY ENGINEER'S COMMENTS

AGENCY USE

POSTED SPEED LIMIT	APPROACH SPEED	TAPER LENGTH	SPACING OF CONES	SIGN SPACING

SEE TC-4 FOR SIGN, CONE SPACING AND TAPER LENGTH

GENERAL NOTES

For hours of darkness, change cones to vertical barricades with steady burn lights.

This plan MAY NOT apply to signalized or multi-way stop intersections. Consult the local jurisdiction when preparing Traffic Control PLans near these intersections.

This plan MAY NOT apply when the work areas affect bike lanes, sidewalks, pedestrian access and curved or narrow roadways. Consult the approving agency when preparing the Traffic Control Plan or these areas.

nothing contained on this drawing shall prevent local jurisdictions from modifying, changing or adopting new specifications deemed necessary. Criteria for position, location and use of Traffic Control Devices is solely for the purpose of guidance to assist in the set up of the Traffic Control Plans.

TC-5 is required for all Traffic Control PLans.

SUBMITTED BY:
NAME
COMPANY
ADDRESS
PHONE

APPLICANT USE

DRAWING NUMBER TC-25

DRAWING NUMBER TC-26

CENTER OF ROAD WORK AREA

INTERSECTION TRAFFIC CONTROL

APPENDIX "A"
SAN DIEGO REGIONAL STANDARD

SIGN SPACING
SEE TC-4
USE FOR ALL
INTERSECTION LEGS

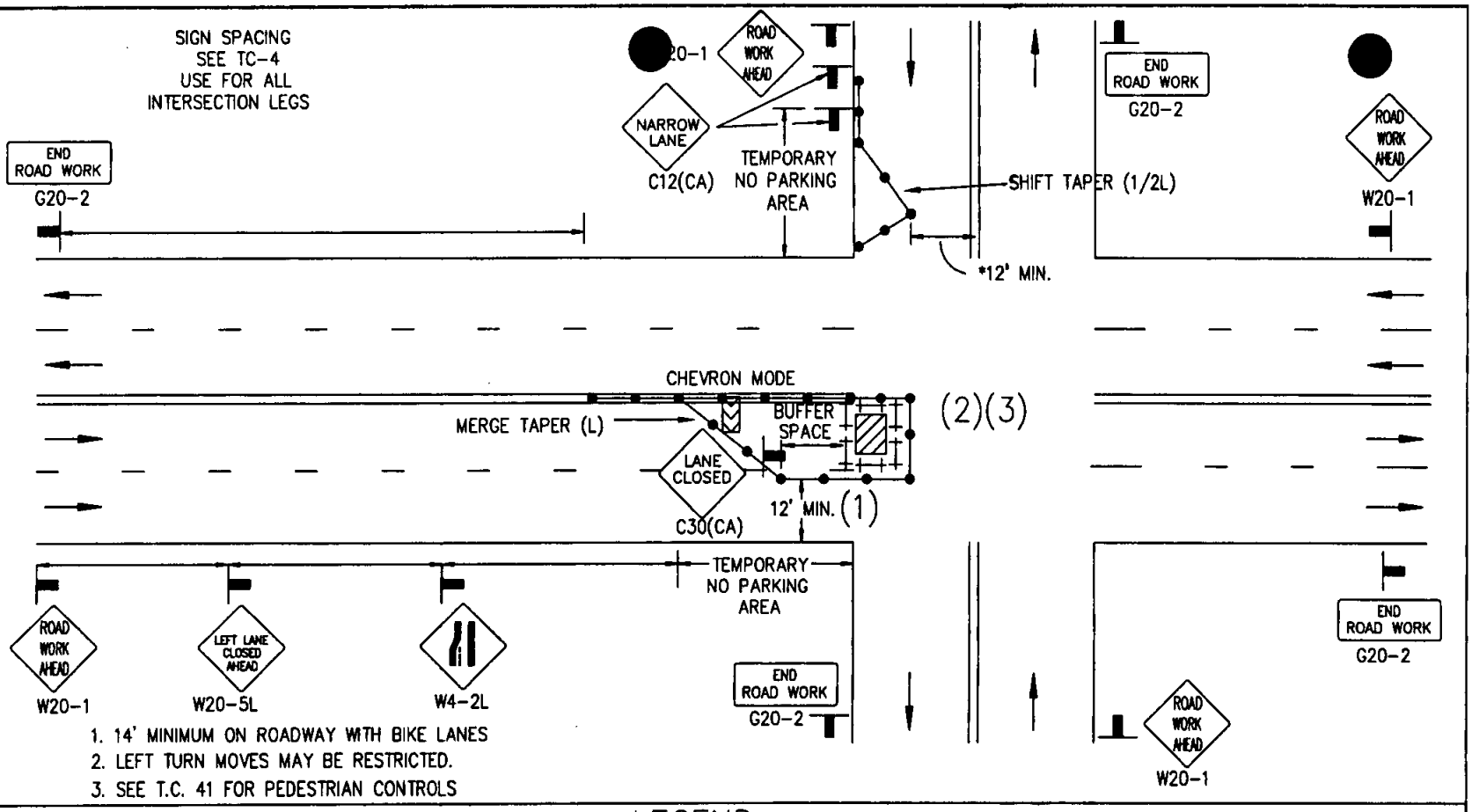

1. 14' MINIMUM ON ROADWAY WITH BIKE LANES
2. LEFT TURN MOVES MAY BE RESTRICTED.
3. SEE T.C. 41 FOR PEDESTRIAN CONTROLS

LEGEND

● CONE ⊢⊣ BARRICADE ▶ FLAGGER ▬ SIGN ☑ FLASHING ARROW SIGN ▨ WORK AREA ⟶ TRAFFIC DIRECTION

AGENCY ENGINEER'S COMMENTS

AGENCY USE

POSTED SPEED LIMIT	APPROACH SPEED	TAPER LENGTH	SPACING OF CONES	SIGN SPACING

SEE TC-4 FOR SIGN, CONE SPACING AND TAPER LENGTH

GENERAL NOTES

For hours of darkness, change cones to vertical barricades with steady burn lights.

This plan MAY NOT apply to signalized or multi-way stop intersections. Consult the local jurisdiction when preparing Traffic Control PLans near these intersections.

This plan MAY NOT apply when the work areas affect bike lanes, sidewalks, pedestrian access and curved or narrow roadways. Consult the approving agency when preparing the Traffic Control Plan or these areas.

nothing contained on this drawing shall prevent local jurisdictions from modifying, changing or adopting new specifications deemed necessary. Criteria for position, location and use of Traffic Control Devices is solely for the purpose of guidance to assist in the set up of the Traffic Control Plans.

TC-5 is required for all Traffic Control PLans.

APPLICANT USE

SUBMITTED BY:
NAME
COMPANY
ADDRESS
PHONE

Revision	By	Approved	Date
ORIGINAL DRAWING	CRH		4/06
			4/27/06

Revision	By	Approved	Date
ORIGINAL DRAWING	CRH	[illegible]	4/06 4/27/06

CENTER OF ROAD WORK AREA

INTERSECTION TRAFFIC CONTROL

APPENDIX "A"
SAN DIEGO REGIONAL STANDARD

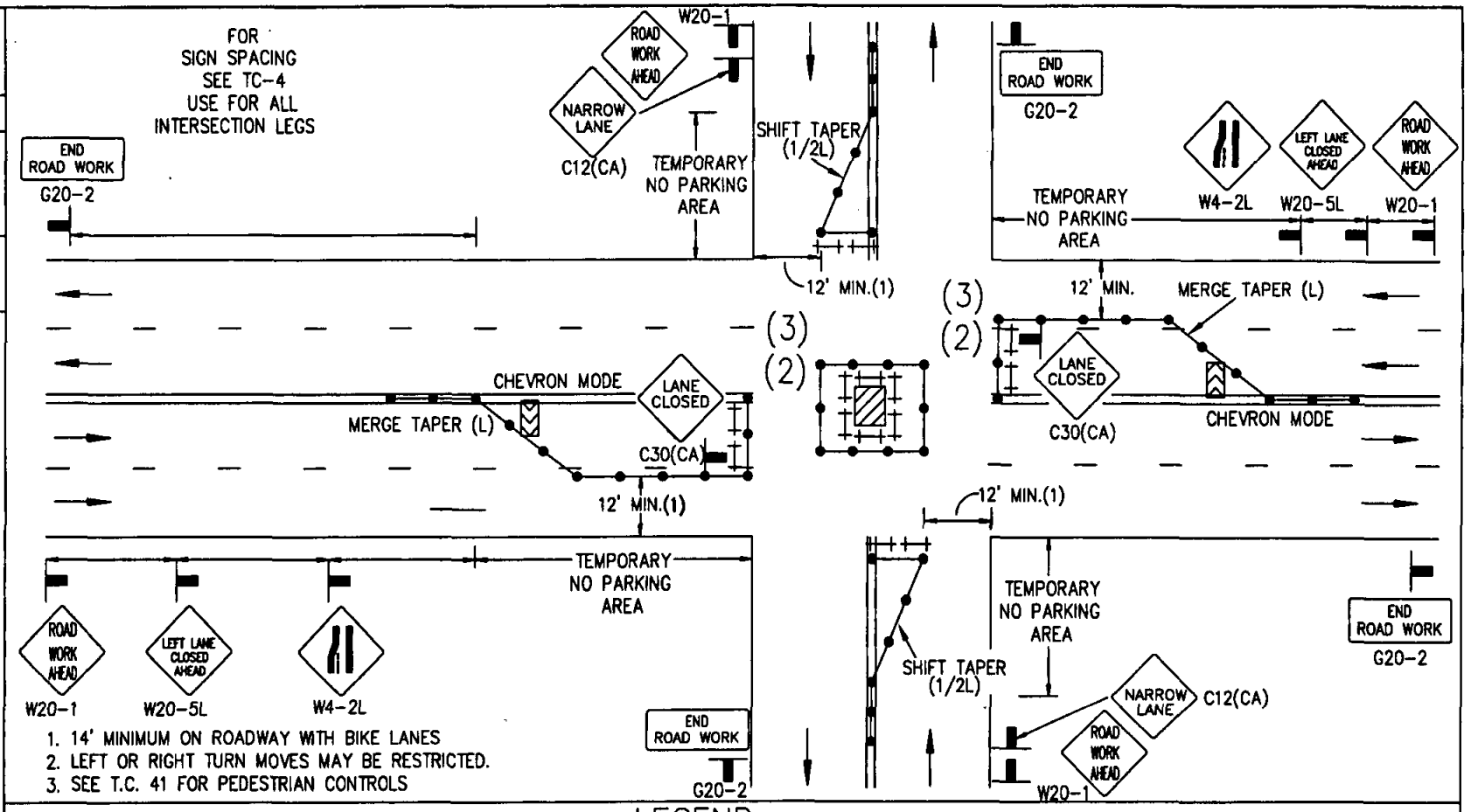

LEGEND

● CONE ⊢⊣ BARRICADE ▶ FLAGGER ▬ SIGN ☑ FLASHING ARROW SIGN ▨ WORK AREA ⟶ TRAFFIC DIRECTION

AGENCY ENGINEER'S COMMENTS

AGENCY USE

SUBMITTED BY:
NAME
COMPANY
ADDRESS
PHONE

APPLICANT USE

POSTED SPEED LIMIT	APPROACH SPEED	TAPER LENGTH	SPACING OF CONES	SIGN SPACING

SEE TC-4 FOR SIGN, CONE SPACING AND TAPER LENGTH

GENERAL NOTES

For hours of darkness, change cones to vertical barricades with steady burn lights.

This plan MAY NOT apply to signalized or multi-way stop intersections. Consult the local jurisdiction when preparing Traffic Control PLans near these intersections.

This plan MAY NOT apply when the work areas affect bike lanes, sidewalks, pedestrian access and curved or narrow roadways. Consult the approving agency when preparing the Traffic Control Plan or these areas.

nothing contained on this drawing shall prevent local jurisdictions from modifying, changing or adopting new specifications deemed necessary. Criteria for position, location and use of Traffic Control Devices is solely for the purpose of guidance to assist in the set up of the Traffic Control Plans.

TC-5 is required for all Traffic Control PLans.

DRAWING NUMBER TC-27

DRAWING NUMBER TC-28

SIDE OF ROAD WORK AREA

INTERSECTION TRAFFIC CONTROL

APPENDIX "A"
SAN DIEGO REGIONAL STANDARD

SIGN SPACING
SEE TC-4
USE FOR ALL
INTERSECTION LEGS

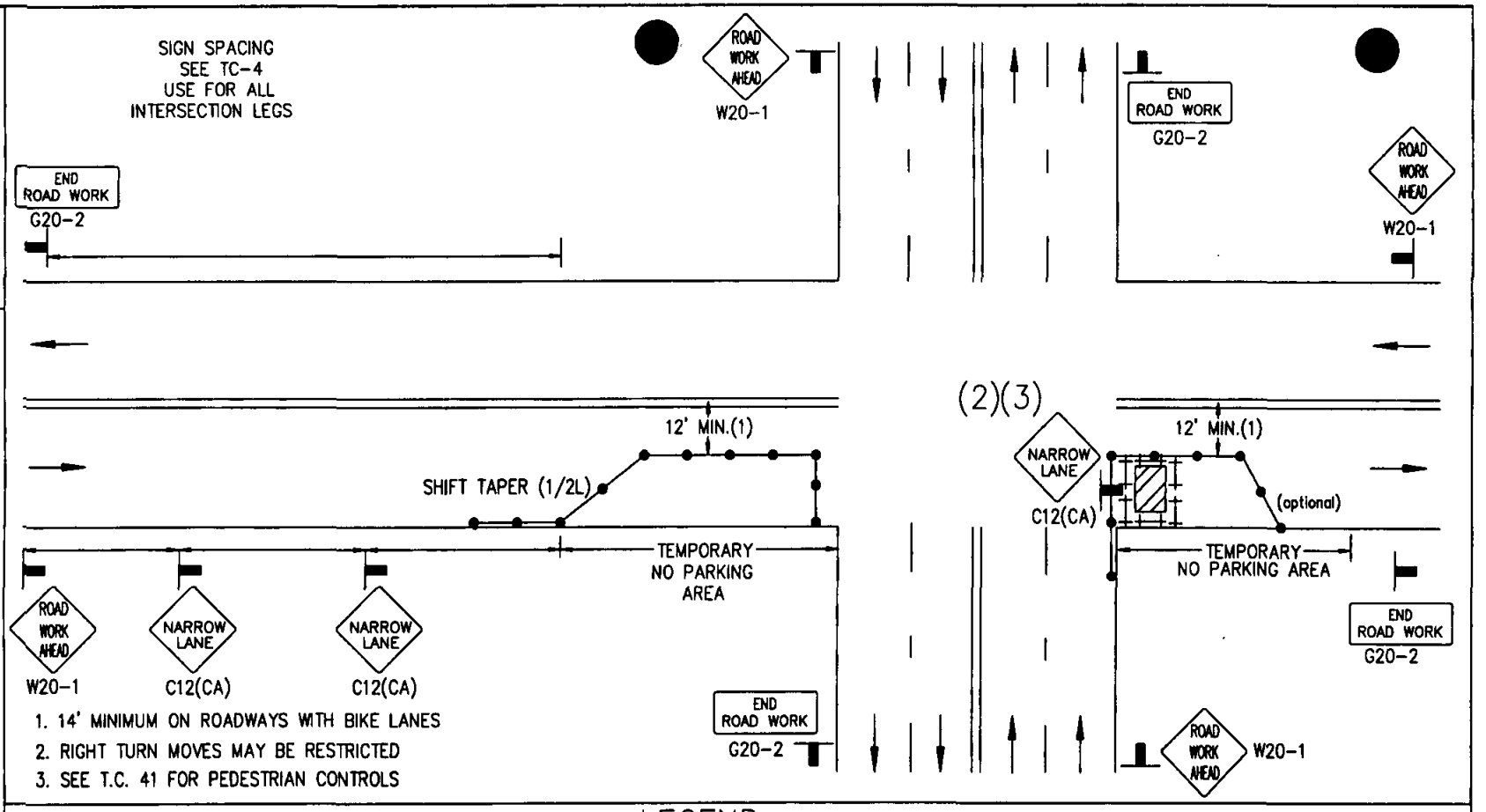

1. 14' MINIMUM ON ROADWAYS WITH BIKE LANES
2. RIGHT TURN MOVES MAY BE RESTRICTED
3. SEE T.C. 41 FOR PEDESTRIAN CONTROLS

LEGEND

CONE | BARRICADE | FLAGGER | SIGN | FLASHING ARROW SIGN | WORK AREA | TRAFFIC DIRECTION

AGENCY ENGINEER'S COMMENTS

AGENCY USE

POSTED SPEED LIMIT	APPROACH SPEED	TAPER LENGTH	SPACING OF CONES	SIGN SPACING

SEE TC-4 FOR SIGN, CONE SPACING AND TAPER LENGTH

GENERAL NOTES

For hours of darkness, change cones to vertical barricades with steady burn lights.

This plan MAY NOT apply to signalized or multi-way stop intersections. Consult the local jurisdiction when preparing Traffic Control PLans near these intersections.

This plan MAY NOT apply when the work areas affect bike lanes, sidewalks, pedestrian access and curved or narrow roadways. Consult the approving agency when preparing the Traffic Control Plan or these areas.

nothing contained on this drawing shall prevent local jurisdictions from modifying, changing or adopting new specifications deemed necessary. Criteria for position, location and use of Traffic Control Devices is solely for the purpose of guidance to assist in the set up of the Traffic Control Plans.

TC-5 is required for all Traffic Control PLans.

APPLICANT USE

SUBMITTED BY:
NAME
COMPANY
ADDRESS
PHONE

Revision	By	Approved	Date
ORIGINAL	DRAWING CRH	[illegible]	4/06
			4/27/06

Revision	By	Approved	Date
ORIGINAL	DRAWING CRH		4/06
		4/27/06	

SIGN SPACING
SEE TC-4
USE FOR ALL
INTERSECTION LEGS

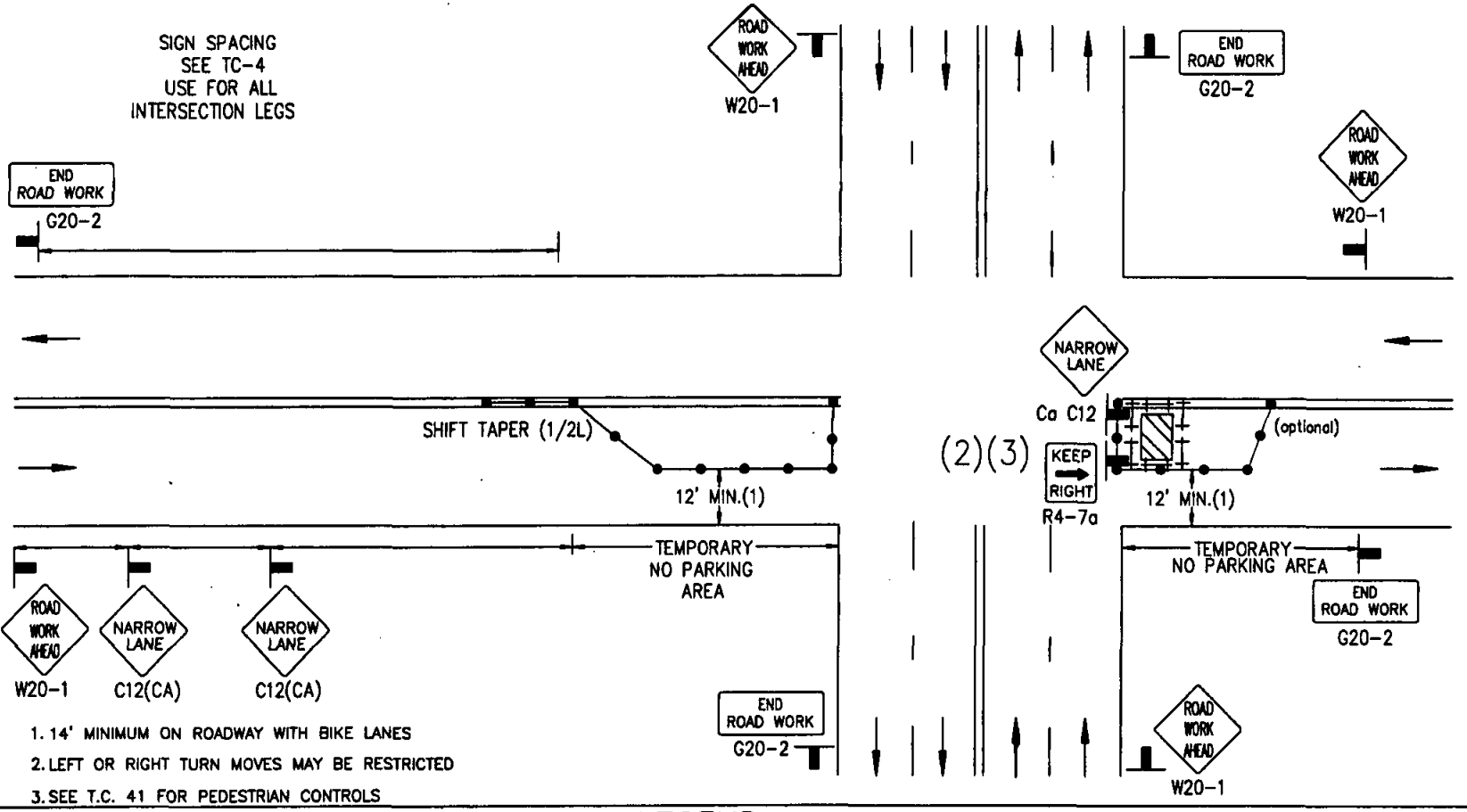

1. 14' MINIMUM ON ROADWAY WITH BIKE LANES
2. LEFT OR RIGHT TURN MOVES MAY BE RESTRICTED
3. SEE T.C. 41 FOR PEDESTRIAN CONTROLS

LEGEND

● CONE ⊢⊣ BARRICADE FLAGGER SIGN FLASHING ARROW SIGN WORK AREA TRAFFIC DIRECTION

AGENCY ENGINEER'S COMMENTS

AGENCY USE

SUBMITTED BY:
NAME
COMPANY
ADDRESS
PHONE

APPLICANT USE

POSTED SPEED LIMIT	APPROACH SPEED	TAPER LENGTH	SPACING OF CONES	SIGN SPACING

SEE TC-4 FOR SIGN, CONE SPACING AND TAPER LENGTH

GENERAL NOTES

For hours of darkness, change cones to vertical barricades with steady burn lights.

This plan MAY NOT apply to signalized or multi-way stop intersections. Consult the local jurisdiction when preparing Traffic Control PLans near these intersections.

This plan MAY NOT apply when the work areas affect bike lanes, sidewalks, pedestrian access and curved or narrow roadways. Consult the approving agency when preparing the Traffic Control Plan or these areas.

nothing contained on this drawing shall prevent local jurisdictions from modifying, changing or adopting new specifications deemed necessary. Criteria for position, location and use of Traffic Control Devices is solely for the purpose of guidance to assist in the set up of the Traffic Control Plans.

TC-5 is required for all Traffic Control PLans.

CENTER OF ROAD WORK AREA

INTERSECTION TRAFFIC CONTROL

APPENDIX "A"
SAN DIEGO REGIONAL STANDARD

DRAWING NUMBER TC-29

DRAWING NUMBER TC-30

SIDE OF ROAD WORK AREA

INTERSECTION TRAFFIC CONTROL

APPENDIX "A"
SAN DIEGO REGIONAL STANDARD

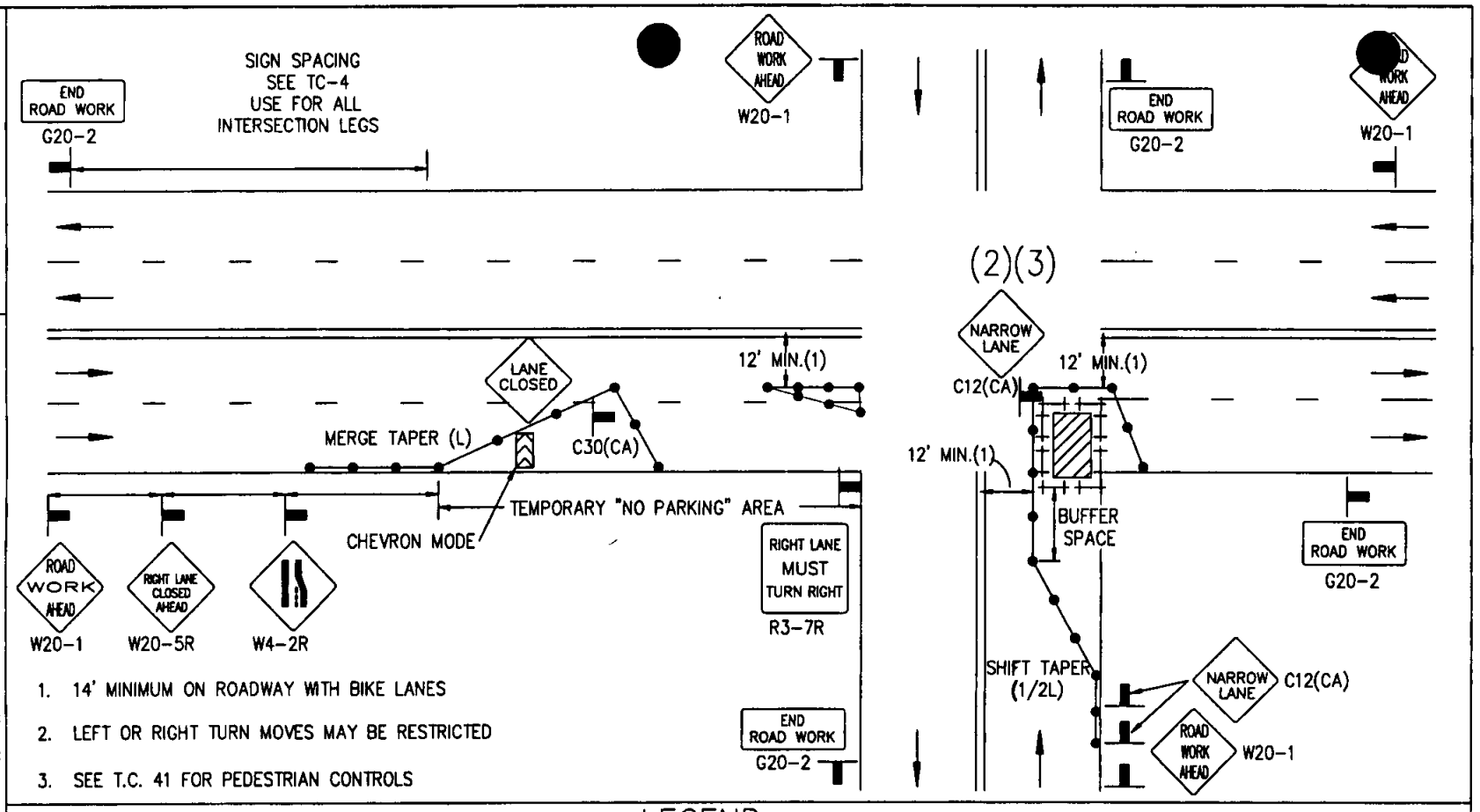

1. 14' MINIMUM ON ROADWAY WITH BIKE LANES
2. LEFT OR RIGHT TURN MOVES MAY BE RESTRICTED
3. SEE T.C. 41 FOR PEDESTRIAN CONTROLS

LEGEND

● CONE ⊢⊣ BARRICADE FLAGGER SIGN FLASHING ARROW SIGN WORK AREA TRAFFIC DIRECTION

AGENCY ENGINEER'S COMMENTS

AGENCY USE

POSTED SPEED LIMIT	APPROACH SPEED	TAPER LENGTH	SPACING OF CONES	SIGN SPACING

SEE TC-4 FOR SIGN, CONE SPACING AND TAPER LENGTH

GENERAL NOTES

For hours of darkness, change cones to vertical barricades with steady burn lights.

This plan MAY NOT apply to signalized or multi-way stop intersections. Consult the local jurisdiction when preparing Traffic Control PLans near these intersections.

This plan MAY NOT apply when the work areas affect bike lanes, sidewalks, pedestrian access and curved or narrow roadways. Consult the approving agency when preparing the Traffic Control Plan or these areas.

nothing contained on this drawing shall prevent local jurisdictions from modifying, changing or adopting new specifications deemed necessary. Criteria for position, location and use of Traffic Control Devices is solely for the purpose of guidance to assist in the set up of the Traffic Control Plans.

TC-5 is required for all Traffic Control PLans.

APPLICANT USE

SUBMITTED BY:
NAME
COMPANY
ADDRESS
PHONE

Revision	By	Approved	Date
DRAWING ORIGINAL	CRH	[illegible]	4/27/06

Revision	By	Approved	Date
ORIGINAL	DRAWING CRH		4/06
			4/27/06

CENTER OF ROAD WORK AREA

INTERSECTION TRAFFIC CONTROL

APPENDIX "A"
SAN DIEGO REGIONAL STANDARD

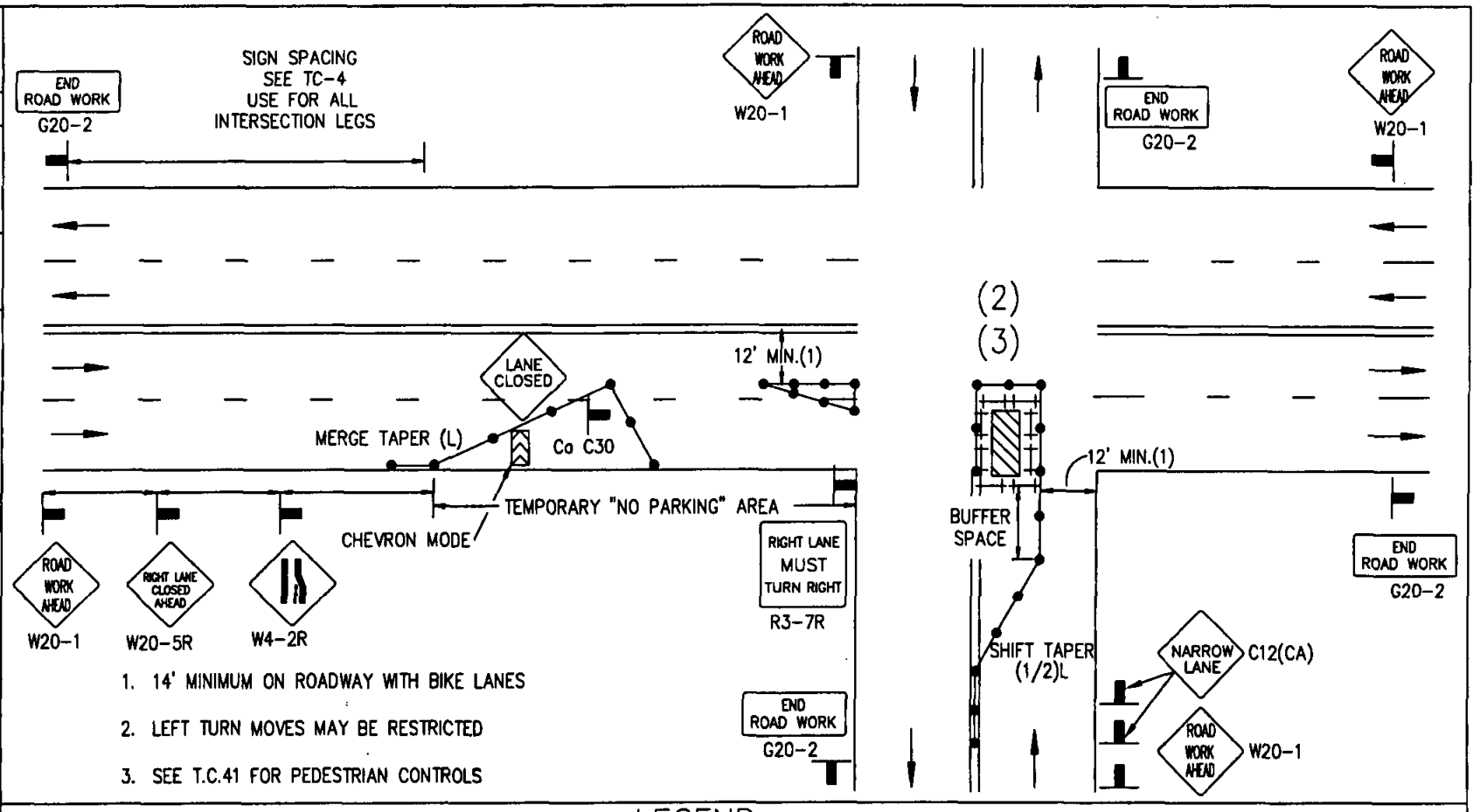

1. 14' MINIMUM ON ROADWAY WITH BIKE LANES
2. LEFT TURN MOVES MAY BE RESTRICTED
3. SEE T.C.41 FOR PEDESTRIAN CONTROLS

LEGEND

● CONE ⊢⊣ BARRICADE ⚑ FLAGGER ▬ SIGN ☒ FLASHING ARROW SIGN ▨ WORK AREA ⟶ TRAFFIC DIRECTION

AGENCY ENGINEER'S COMMENTS

AGENCY USE

POSTED SPEED LIMIT	APPROACH SPEED	TAPER LENGTH	SPACING OF CONES	SIGN SPACING

SEE TC-4 FOR SIGN, CONE SPACING AND TAPER LENGTH

GENERAL NOTES

For hours of darkness, change cones to vertical barricades with steady burn lights.

This plan MAY NOT apply to signalized or multi-way stop intersections. Consult the local jurisdiction when preparing Traffic Control PLans near these intersections.

This plan MAY NOT apply when the work areas affect bike lanes, sidewalks, pedestrian access and curved or narrow roadways. Consult the approving agency when preparing the Traffic Control Plan or these areas.

nothing contained on this drawing shall prevent local jurisdictions from modifying, changing or adopting new specifications deemed necessary. Criteria for position, location and use of Traffic Control Devices is solely for the purpose of guidance to assist in the set up of the Traffic Control Plans.

TC-5 is required for all Traffic Control PLans.

SUBMITTED BY:
NAME
COMPANY
ADDRESS
PHONE

APPLICANT USE

DRAWING NUMBER TC-31

DRAWING NUMBER TC-32

APPENDIX "A"
SAN DIEGO REGIONAL STANDARD

SIDE OF ROAD WORK AREA
LEFT TURN INTERSECTION TRAFFIC CONTROL

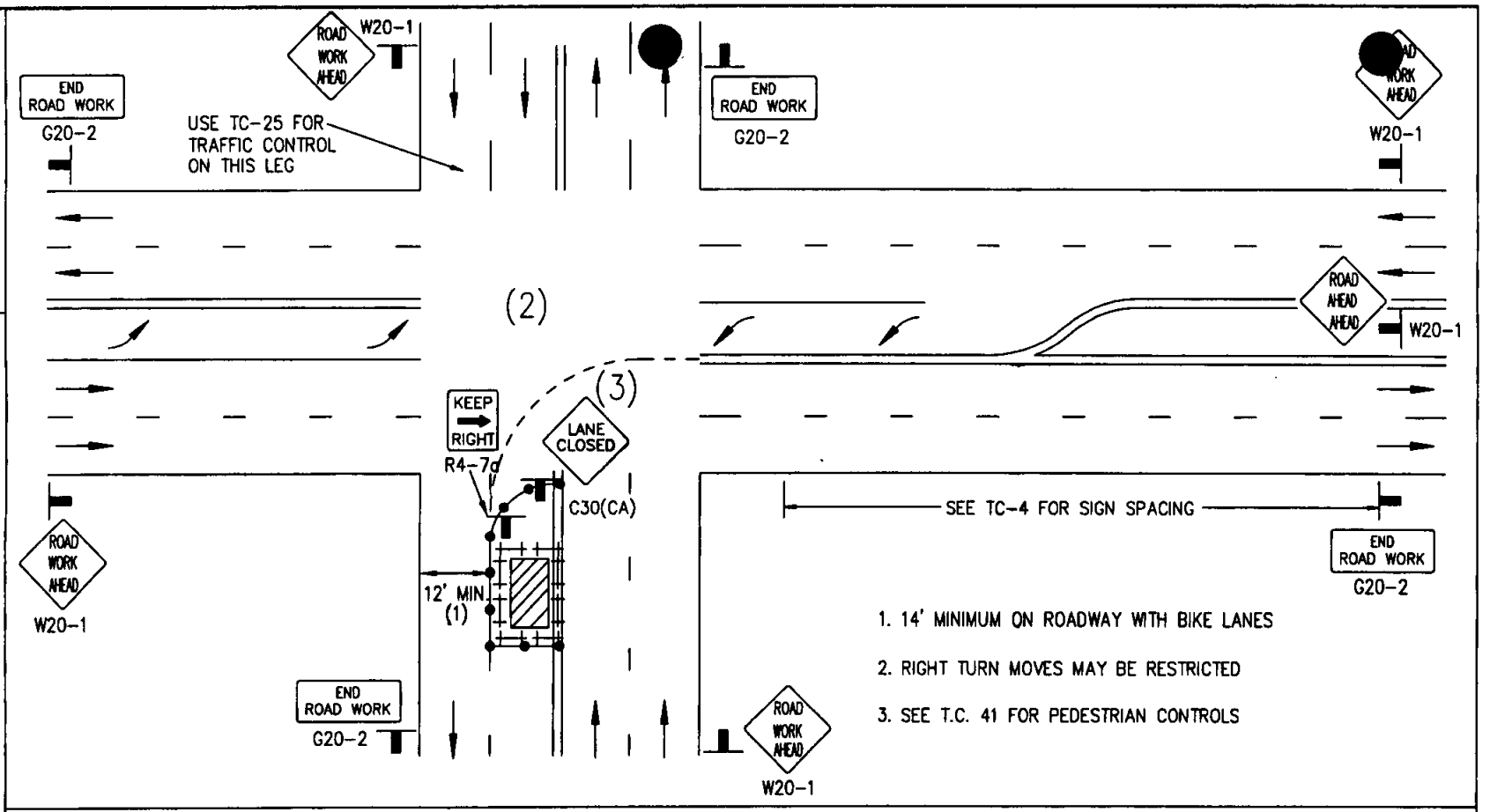

1. 14' MINIMUM ON ROADWAY WITH BIKE LANES
2. RIGHT TURN MOVES MAY BE RESTRICTED
3. SEE T.C. 41 FOR PEDESTRIAN CONTROLS

LEGEND

● CONE ⊢⊣ BARRICADE FLAGGER SIGN FLASHING ARROW SIGN WORK AREA TRAFFIC DIRECTION

AGENCY ENGINEER'S COMMENTS

AGENCY USE

POSTED SPEED LIMIT	APPROACH SPEED	TAPER LENGTH	SPACING OF CONES	SIGN SPACING

SEE TC-4 FOR SIGN, CONE SPACING AND TAPER LENGTH

GENERAL NOTES

For hours of darkness, change cones to vertical barricades with steady burn lights.

This plan MAY NOT apply to signalized or multi-way stop intersections. Consult the local jurisdiction when preparing Traffic Control PLans near these intersections.

This plan MAY NOT apply when the work areas affect bike lanes, sidewalks, pedestrian access and curved or narrow roadways. Consult the approving agency when preparing the Traffic Control Plan or these areas.

nothing contained on this drawing shall prevent local jurisdictions from modifying, changing or adopting new specifications deemed necessary. Criteria for position, location and use of Traffic Control Devices is solely for the purpose of guidance to assist in the set up of the Traffic Control Plans.

TC-5 is required for all Traffic Control PLans.

APPLICANT USE

SUBMITTED BY:
NAME
COMPANY
ADDRESS
PHONE

Revision	By	Approved	Date
ORIGINAL DRAWING	CRH		4/06
			4/27/06

Revision	By	Approved	Date
ORIGINAL	DRAWING CRH		4/06
			4/27/06

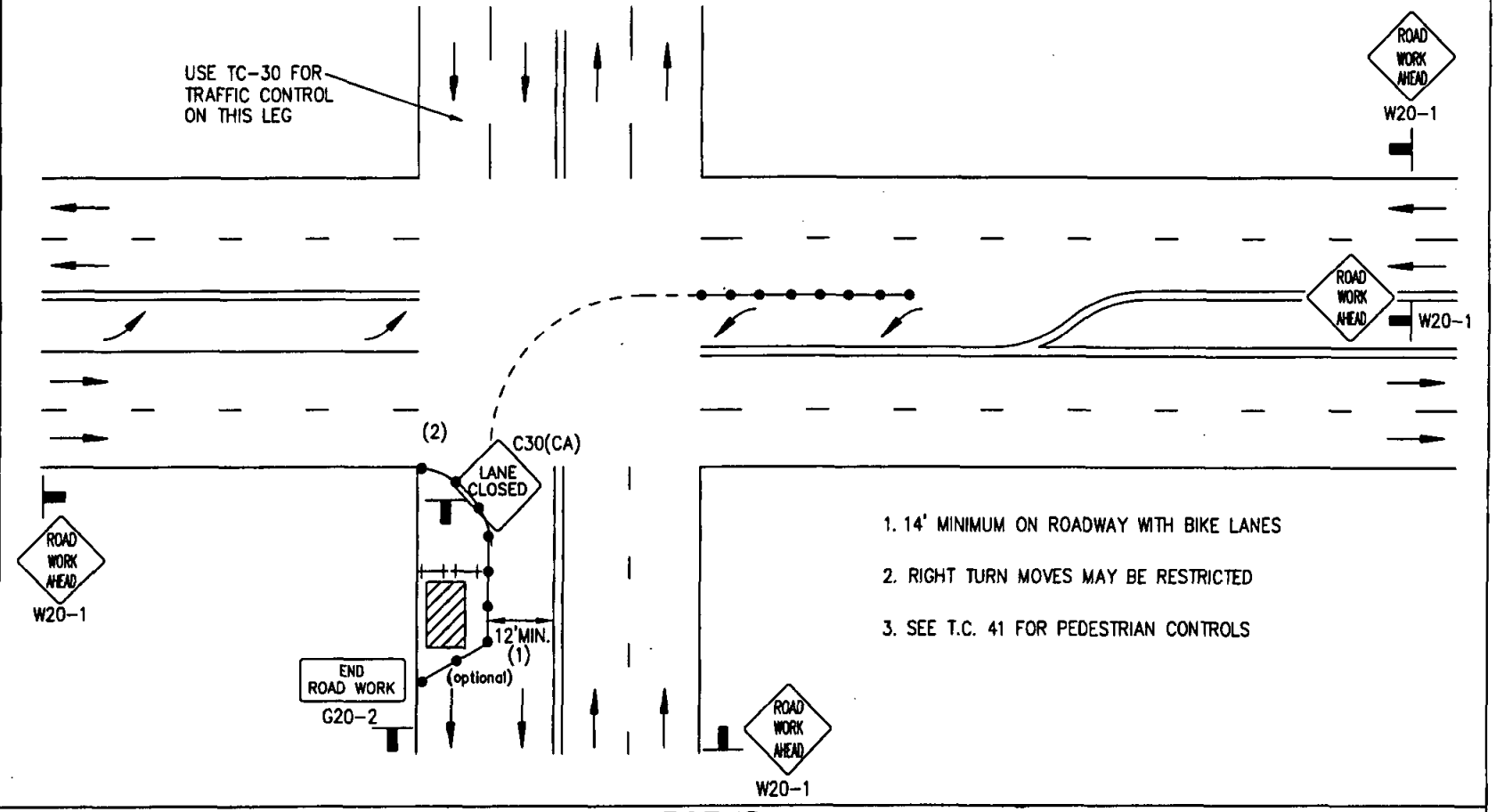

1. 14' MINIMUM ON ROADWAY WITH BIKE LANES
2. RIGHT TURN MOVES MAY BE RESTRICTED
3. SEE T.C. 41 FOR PEDESTRIAN CONTROLS

LEGEND

● CONE ⊢⊣ BARRICADE FLAGGER SIGN FLASHING ARROW SIGN WORK AREA TRAFFIC DIRECTION

AGENCY ENGINEER'S COMMENTS

AGENCY USE

POSTED SPEED LIMIT	APPROACH SPEED	TAPER LENGTH	SPACING OF CONES	SIGN SPACING

SEE TC-4 FOR SIGN, CONE SPACING AND TAPER LENGTH

GENERAL NOTES

For hours of darkness, change cones to vertical barricades with steady burn lights.

This plan MAY NOT apply to signalized or multi-way stop intersections. Consult the local jurisdiction when preparing Traffic Control PLans near these intersections.

This plan MAY NOT apply when the work areas affect bike lanes, sidewalks, pedestrian access and curved or narrow roadways. Consult the approving agency when preparing the Traffic Control Plan or these areas.

nothing contained on this drawing shall prevent local jurisdictions from modifying, changing or adopting new specifications deemed necessary. Criteria for position, location and use of Traffic Control Devices is solely for the purpose of guidance to assist in the set up of the Traffic Control Plans.

TC-5 is required for all Traffic Control PLans.

SUBMITTED BY:
NAME
COMPANY
ADDRESS
PHONE

APPLICANT USE

SIDE OF ROAD WORK AREA

LEFT TURN INTERSECTION TRAFFIC CONTROL

APPENDIX "A"
SAN DIEGO REGIONAL STANDARD

DRAWING NUMBER TC-33

DRAWING NUMBER TC-34

SIDE OF ROAD WORK AREA

LEFT TURN INTERSECTION TRAFFIC CONTROL

APPENDIX "A"
SAN DIEGO REGIONAL STANDARD

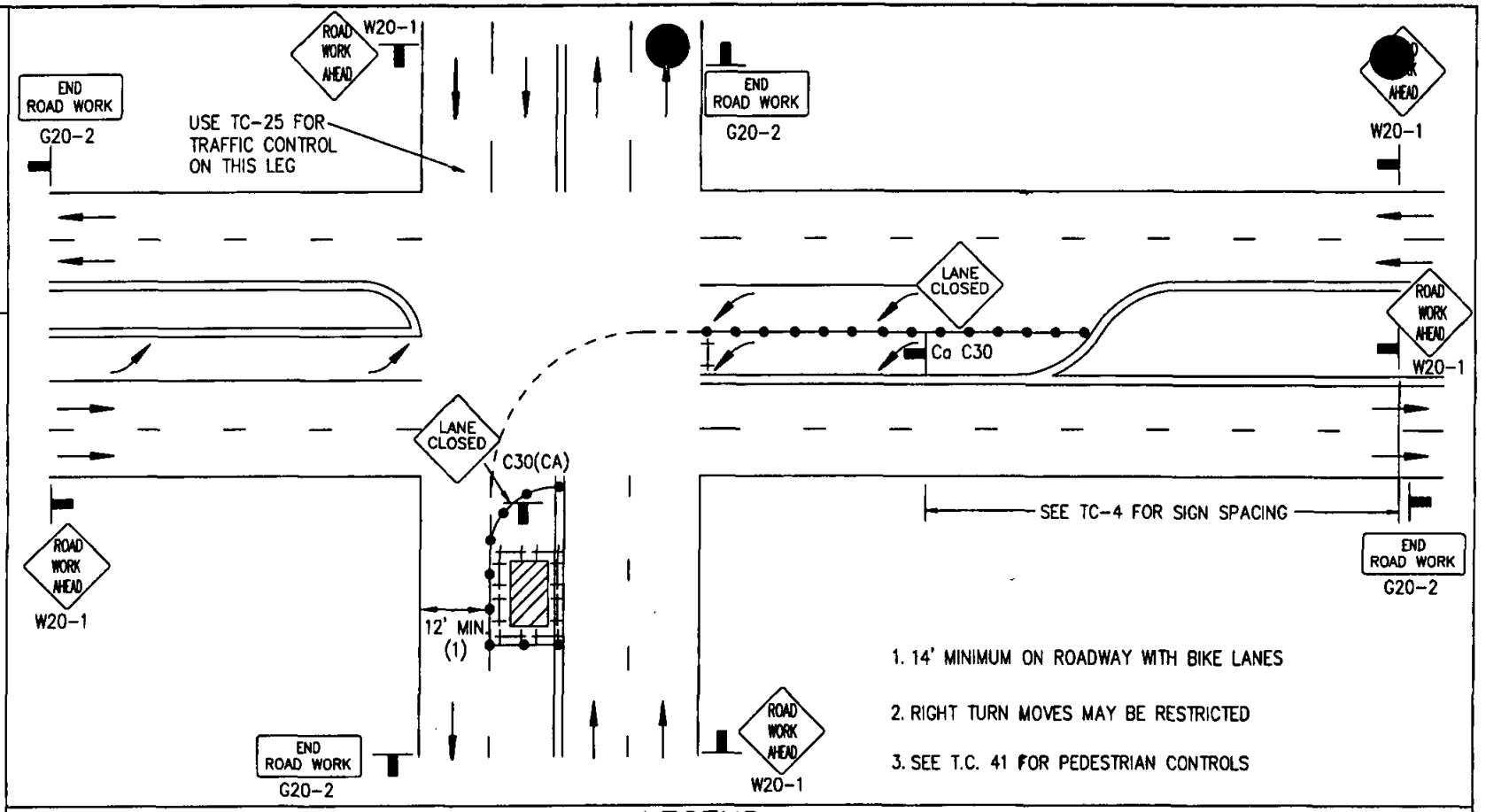

1. 14' MINIMUM ON ROADWAY WITH BIKE LANES
2. RIGHT TURN MOVES MAY BE RESTRICTED
3. SEE T.C. 41 FOR PEDESTRIAN CONTROLS

LEGEND

● CONE ⊢⊣ BARRICADE FLAGGER SIGN FLASHING ARROW SIGN WORK AREA TRAFFIC DIRECTION

AGENCY ENGINEER'S COMMENTS

AGENCY USE

POSTED SPEED LIMIT	APPROACH SPEED	TAPER LENGTH	SPACING OF CONES	SIGN SPACING

SEE TC-4 FOR SIGN, CONE SPACING AND TAPER LENGTH

GENERAL NOTES

For hours of darkness, change cones to vertical barricades with steady burn lights.

This plan MAY NOT apply to signalized or multi-way stop intersections. Consult the local jurisdiction when preparing Traffic Control PLans near these intersections.

This plan MAY NOT apply when the work areas affect bike lanes, sidewalks, pedestrian access and curved or narrow roadways. Consult the approving agency when preparing the Traffic Control Plan or these areas.

nothing contained on this drawing shall prevent local jurisdictions from modifying, changing or adopting new specifications deemed necessary. Criteria for position, location and use of Traffic Control Devices is solely for the purpose of guidance to assist in the set up of the Traffic Control Plans.

TC-5 is required for all Traffic Control PLans.

APPLICANT USE

SUBMITTED BY:
NAME
COMPANY
ADDRESS
PHONE

Revision	By	Approved	Date
ORIGINAL DRAWING	CRH	[illegible]	4/06 4/27/06

Revision	By	Approved	Date
ORIGINAL	DRAWING CRH	[illegible]	4/06
		4/27/06	

SIDE OF ROAD WORK AREA

INTERSECTION TRAFFIC CONTROL

APPENDIX "A"
SAN DIEGO REGIONAL STANDARD

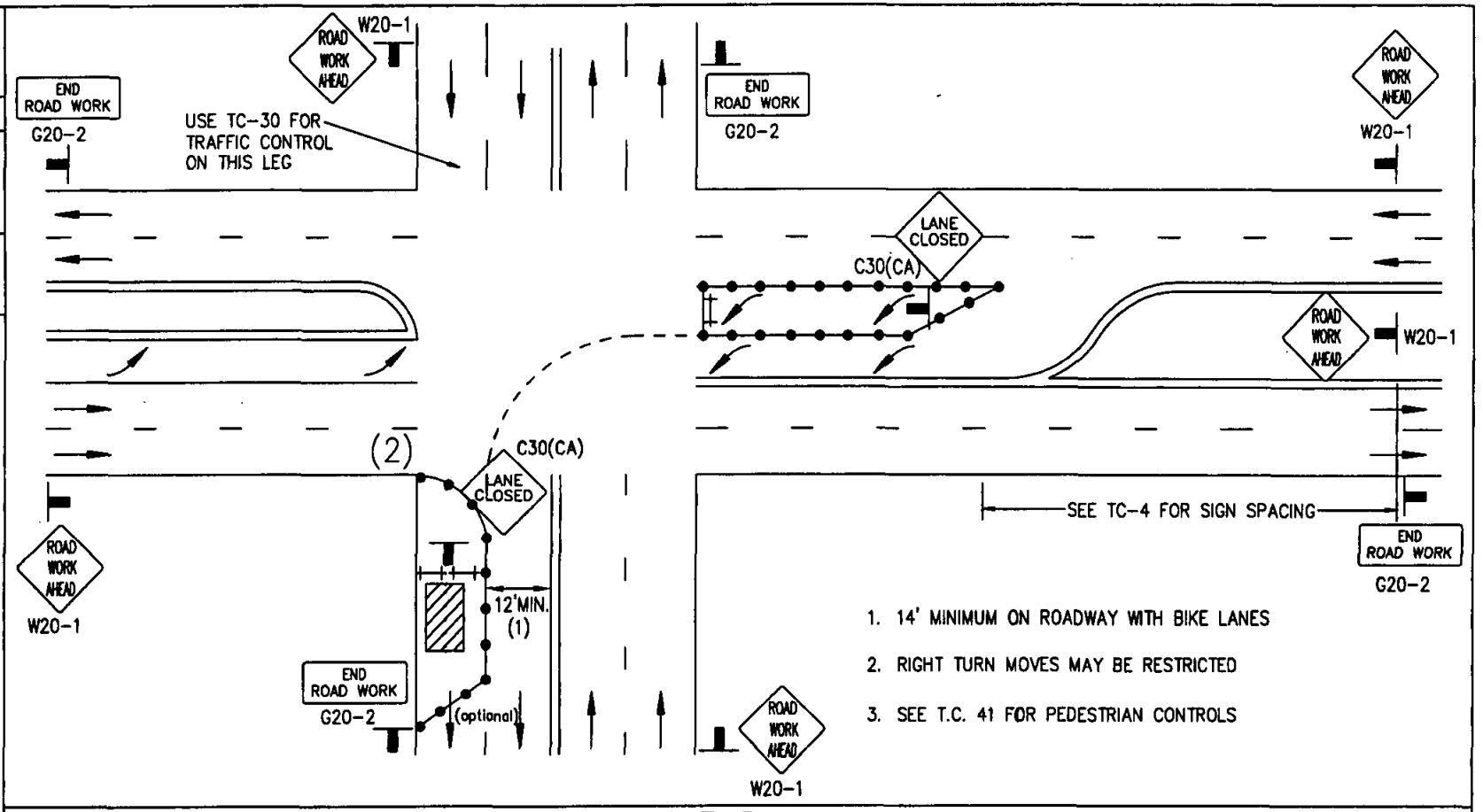

1. 14' MINIMUM ON ROADWAY WITH BIKE LANES
2. RIGHT TURN MOVES MAY BE RESTRICTED
3. SEE T.C. 41 FOR PEDESTRIAN CONTROLS

LEGEND

● CONE ⊢⊣ BARRICADE ▶ FLAGGER ▬ SIGN ☒ FLASHING ARROW SIGN ▨ WORK AREA → TRAFFIC DIRECTION

AGENCY ENGINEER'S COMMENTS

AGENCY USE

POSTED SPEED LIMIT	APPROACH SPEED	TAPER LENGTH	SPACING OF CONES	SIGN SPACING

SEE TC-4 FOR SIGN, CONE SPACING AND TAPER LENGTH

GENERAL NOTES

For hours of darkness, change cones to vertical barricades with steady burn lights.

This plan MAY NOT apply to signalized or multi-way stop intersections. Consult the local jurisdiction when preparing Traffic Control PLans near these intersections.

This plan MAY NOT apply when the work areas affect bike lanes, sidewalks, pedestrian access and curved or narrow roadways. Consult the approving agency when preparing the Traffic Control Plan or these areas.

nothing contained on this drawing shall prevent local jurisdictions from modifying, changing or adopting new specifications deemed necessary. Criteria for position, location and use of Traffic Control Devices is solely for the purpose of guidance to assist in the set up of the Traffic Control Plans.

TC-5 is required for all Traffic Control PLans.

SUBMITTED BY:
NAME
COMPANY
ADDRESS
PHONE

APPLICANT USE

DRAWING NUMBER TC-35

DRAWING NUMBER TC-36

SIDE OF ROAD WORK AREA

RIGHT TURN INTERSECTION TRAFFIC CONTROL

APPENDIX "A"
SAN DIEGO REGIONAL STANDARD

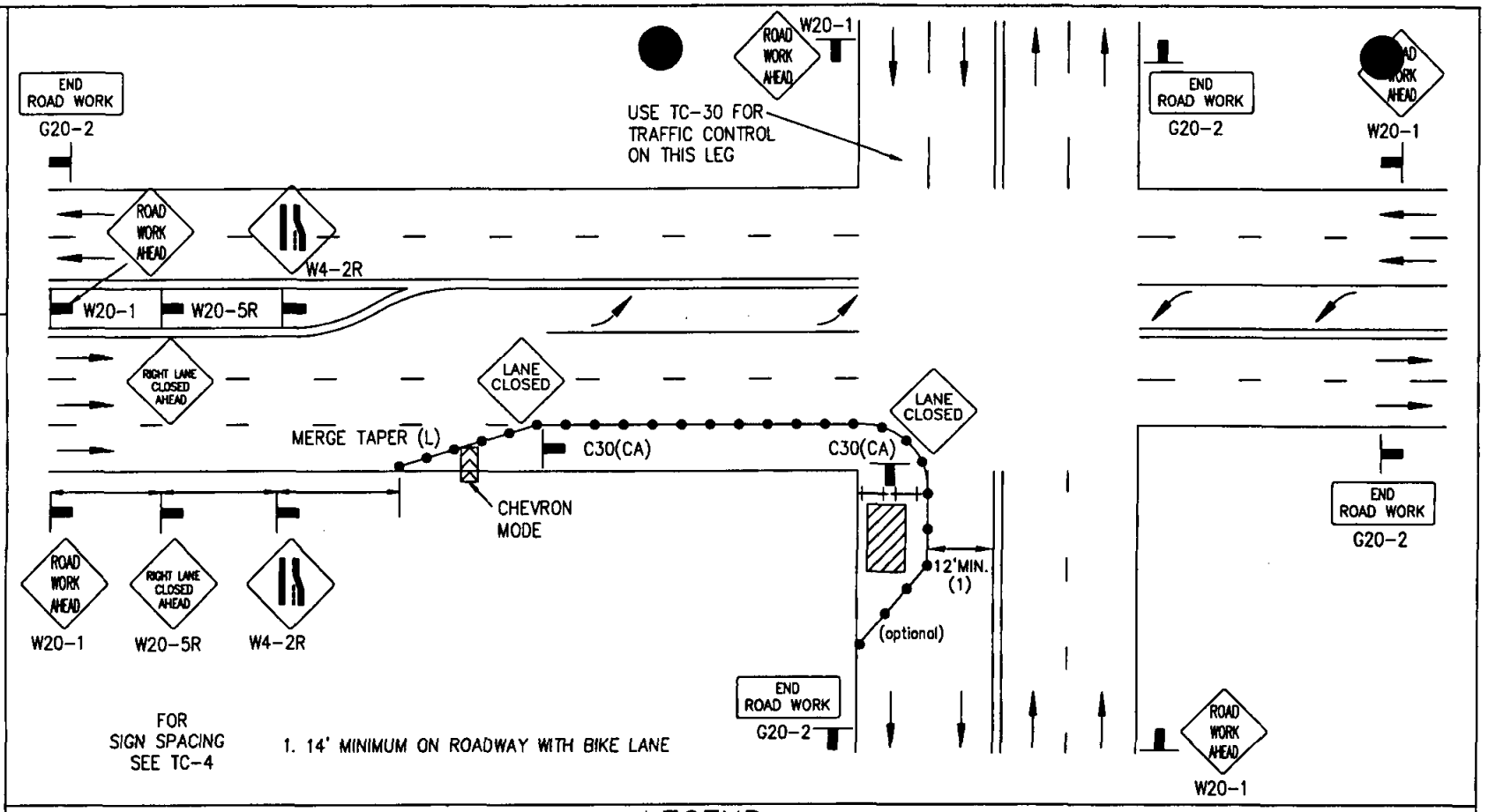

LEGEND

● CONE ⊢⊣ BARRICADE FLAGGER SIGN FLASHING ARROW SIGN WORK AREA TRAFFIC DIRECTION

AGENCY ENGINEER'S COMMENTS

AGENCY USE

POSTED SPEED LIMIT	APPROACH SPEED	TAPER LENGTH	SPACING OF CONES	SIGN SPACING

SEE TC-4 FOR SIGN, CONE SPACING AND TAPER LENGTH

GENERAL NOTES

For hours of darkness, change cones to vertical barricades with steady burn lights.

This plan MAY NOT apply to signalized or multi-way stop intersections. Consult the local jurisdiction when preparing Traffic Control PLans near these intersections.

This plan MAY NOT apply when the work areas affect bike lanes, sidewalks, pedestrian access and curved or narrow roadways. Consult the approving agency when preparing the Traffic Control Plan or these areas.

nothing contained on this drawing shall prevent local jurisdictions from modifying, changing or adopting new specifications deemed necessary. Criteria for position, location and use of Traffic Control Devices is solely for the purpose of guidance to assist in the set up of the Traffic Control Plans.

TC-5 is required for all Traffic Control PLans.

APPLICANT USE

SUBMITTED BY:
NAME
COMPANY
ADDRESS
PHONE

Revision	By	Approved	Date
ORIGINAL DRAWING	CRH		4/06
			4/27/06

Revision	By	Approved	Date
ORIGINAL	DRAWING CRH		4/06
		4/27/06	

SIDE OF ROAD WORK AREA

RIGHT TURN INTERSECTION TRAFFIC CONTROL

APPENDIX "A"
SAN DIEGO REGIONAL STANDARD

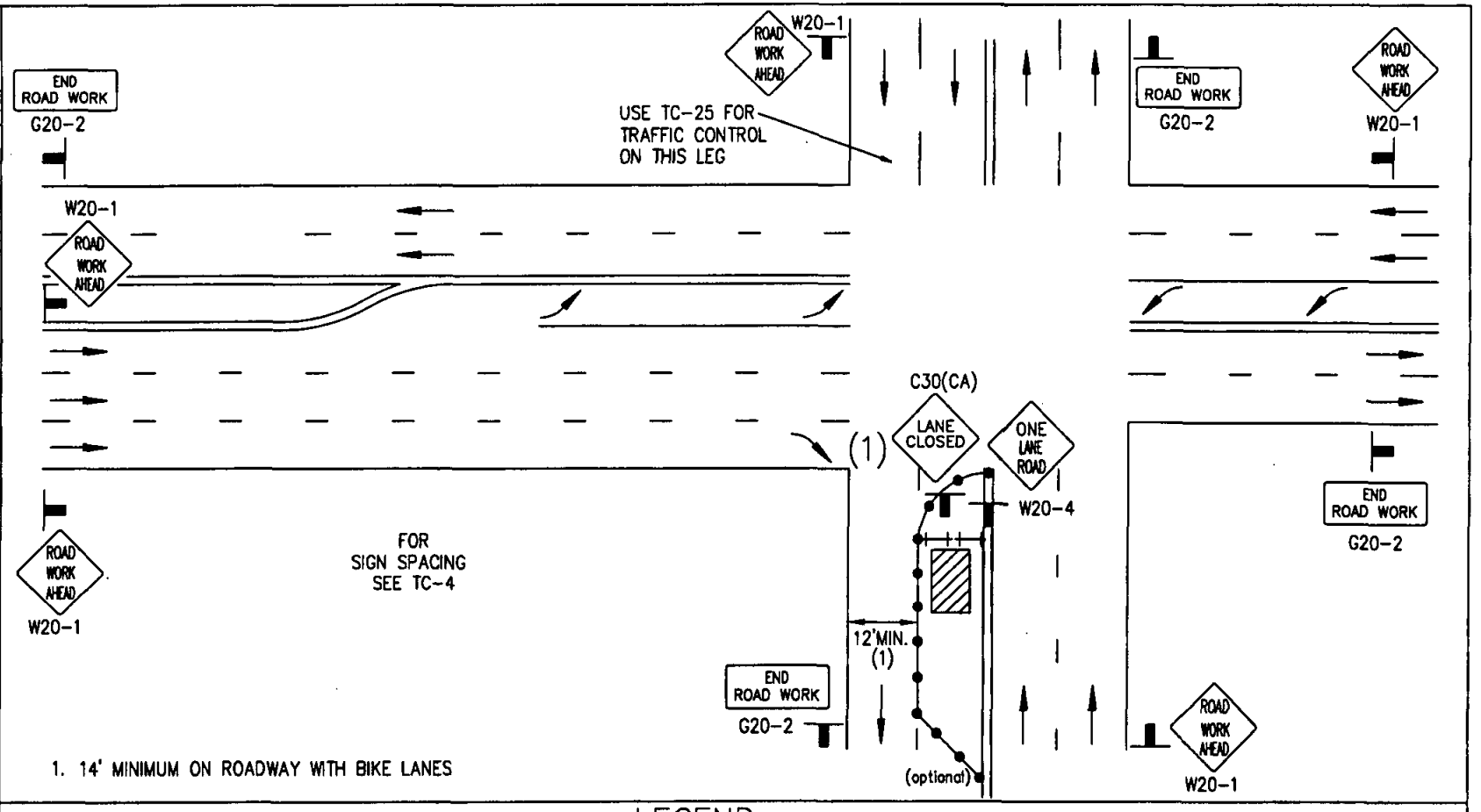

1. 14' MINIMUM ON ROADWAY WITH BIKE LANES

LEGEND

● CONE ⊢⊣ BARRICADE FLAGGER SIGN FLASHING ARROW SIGN WORK AREA TRAFFIC DIRECTION

AGENCY ENGINEER'S COMMENTS

AGENCY USE

POSTED SPEED LIMIT	APPROACH SPEED	TAPER LENGTH	SPACING OF CONES	SIGN SPACING

SEE TC-4 FOR SIGN, CONE SPACING AND TAPER LENGTH

GENERAL NOTES

For hours of darkness, change cones to vertical barricades with steady burn lights.

This plan MAY NOT apply to signalized or multi-way stop intersections. Consult the local jurisdiction when preparing Traffic Control PLans near these intersections.

This plan MAY NOT apply when the work areas affect bike lanes, sidewalks, pedestrian access and curved or narrow roadways. Consult the approving agency when preparing the Traffic Control Plan or these areas.

nothing contained on this drawing shall prevent local jurisdictions from modifying, changing or adopting new specifications deemed necessary. Criteria for position, location and use of Traffic Control Devices is solely for the purpose of guidance to assist in the set up of the Traffic Control Plans.

TC-5 is required for all Traffic Control PLans.

SUBMITTED BY:
NAME
COMPANY
ADDRESS
PHONE

APPLICANT USE

DRAWING NUMBER TC-37

DRAWING NUMBER TC-38

APPENDIX "A"
SAN DIEGO REGIONAL STANDARD

SIDE OF ROAD WORK AREA
RIGHT TURN INTERSECTION TRAFFIC CONTROL

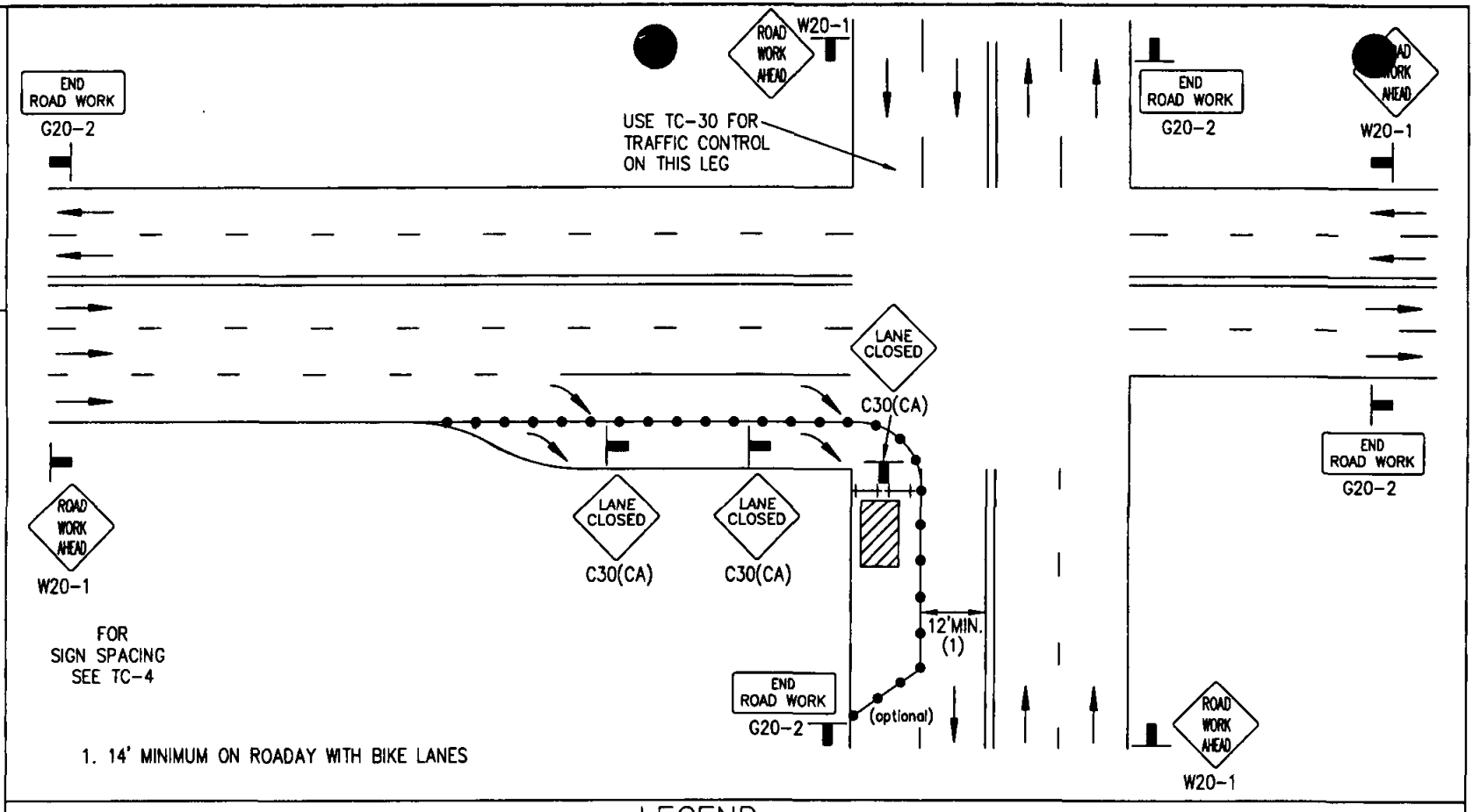

1. 14' MINIMUM ON ROADAY WITH BIKE LANES

LEGEND

● CONE ⊢⊣ BARRICADE FLAGGER SIGN FLASHING ARROW SIGN WORK AREA TRAFFIC DIRECTION

AGENCY ENGINEER'S COMMENTS

AGENCY USE

POSTED SPEED LIMIT	APPROACH SPEED	TAPER LENGTH	SPACING OF CONES	SIGN SPACING

SEE TC-4 FOR SIGN, CONE SPACING AND TAPER LENGTH

GENERAL NOTES

For hours of darkness, change cones to vertical barricades with steady burn lights.

This plan MAY NOT apply to signalized or multi-way stop intersections. Consult the local jurisdiction when preparing Traffic Control PLans near these intersections.

This plan MAY NOT apply when the work areas affect bike lanes, sidewalks, pedestrian access and curved or narrow roadways. Consult the approving agency when preparing the Traffic Control Plan or these areas.

nothing contained on this drawing shall prevent local jurisdictions from modifying, changing or adopting new specifications deemed necessary. Criteria for position, location and use of Traffic Control Devices is solely for the purpose of guidance to assist in the set up of the Traffic Control Plans.

TC-5 is required for all Traffic Control PLans.

APPLICANT USE

SUBMITTED BY:
NAME
COMPANY
ADDRESS
PHONE

Revision	By	Approved	Date
DRAWING ORIGINAL	CRH	[signature]	4/06 4/27/06

Revision	By	Approved	Date
ORIGINAL	DRAWING CRH		4/06
			4/27/06

SIDE OF ROAD WORK AREA

RIGHT TURN INTERSECTION TRAFFIC CONTROL

APPENDIX "A"
SAN DIEGO REGIONAL STANDARD

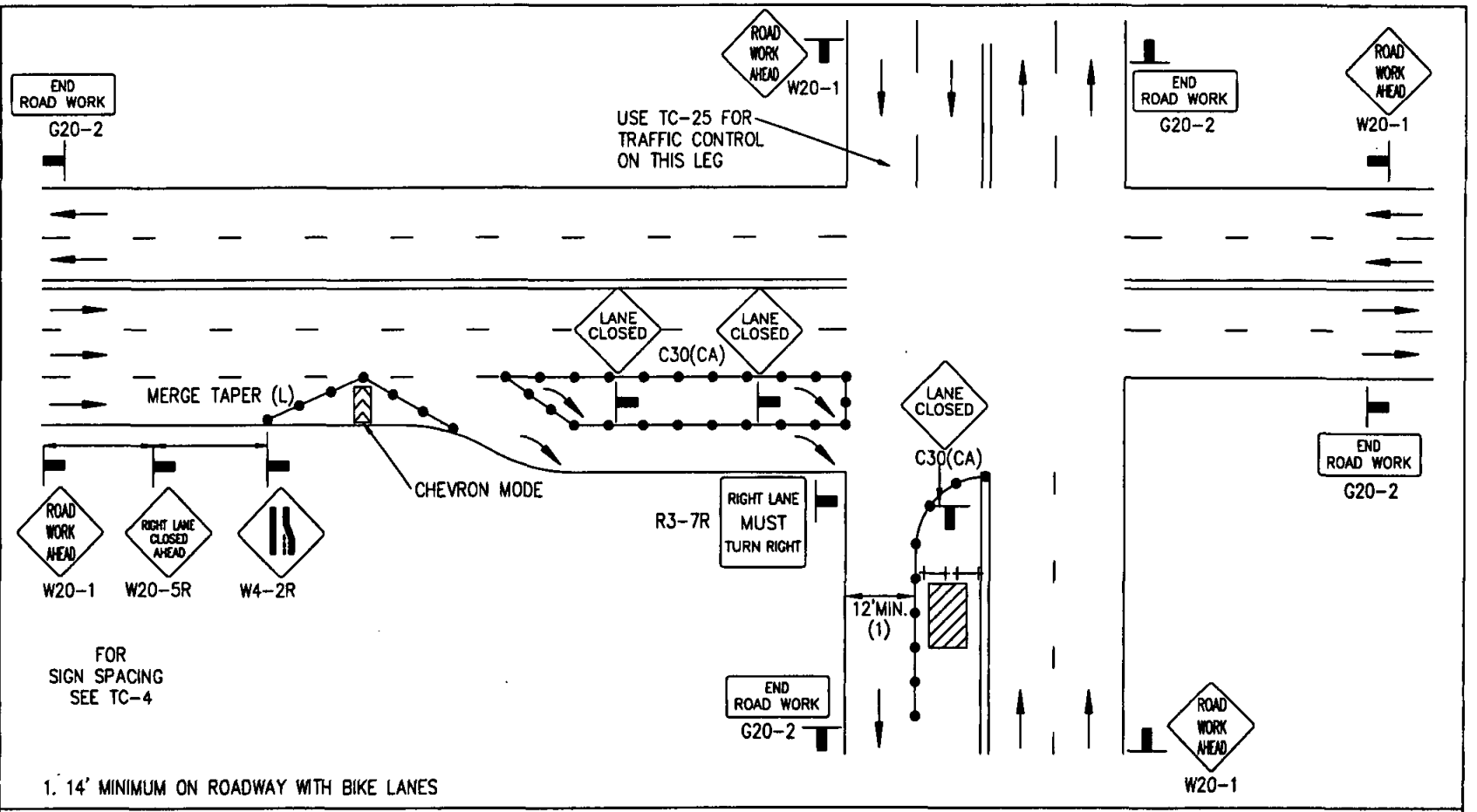

LEGEND

- CONE
- BARRICADE
- FLAGGER
- SIGN
- FLASHING ARROW SIGN
- WORK AREA
- TRAFFIC DIRECTION

AGENCY ENGINEER'S COMMENTS

AGENCY USE

SUBMITTED BY:
NAME
COMPANY
ADDRESS
PHONE

APPLICANT USE

POSTED SPEED LIMIT	APPROACH SPEED	TAPER LENGTH	SPACING OF CONES	SIGN SPACING

SEE TC-4 FOR SIGN, CONE SPACING AND TAPER LENGTH

GENERAL NOTES

For hours of darkness, change cones to vertical barricades with steady burn lights.

This plan MAY NOT apply to signalized or multi-way stop intersections. Consult the local jurisdiction when preparing Traffic Control PLans near these intersections.

This plan MAY NOT apply when the work areas affect bike lanes, sidewalks, pedestrian access and curved or narrow roadways. Consult the approving agency when preparing the Traffic Control Plan or these areas.

nothing contained on this drawing shall prevent local jurisdictions from modifying, changing or adopting new specifications deemed necessary. Criteria for position, location and use of Traffic Control Devices is solely for the purpose of guidance to assist in the set up of the Traffic Control Plans.

TC-5 is required for all Traffic Control PLans.

DRAWING NUMBER TC-39

DRAWING NUMBER TC-40

SIDE OF ROAD WORK AREA

BIKE LANE CLOSURE

APPENDIX "A"
SAN DIEGO REGIONAL STANDARD

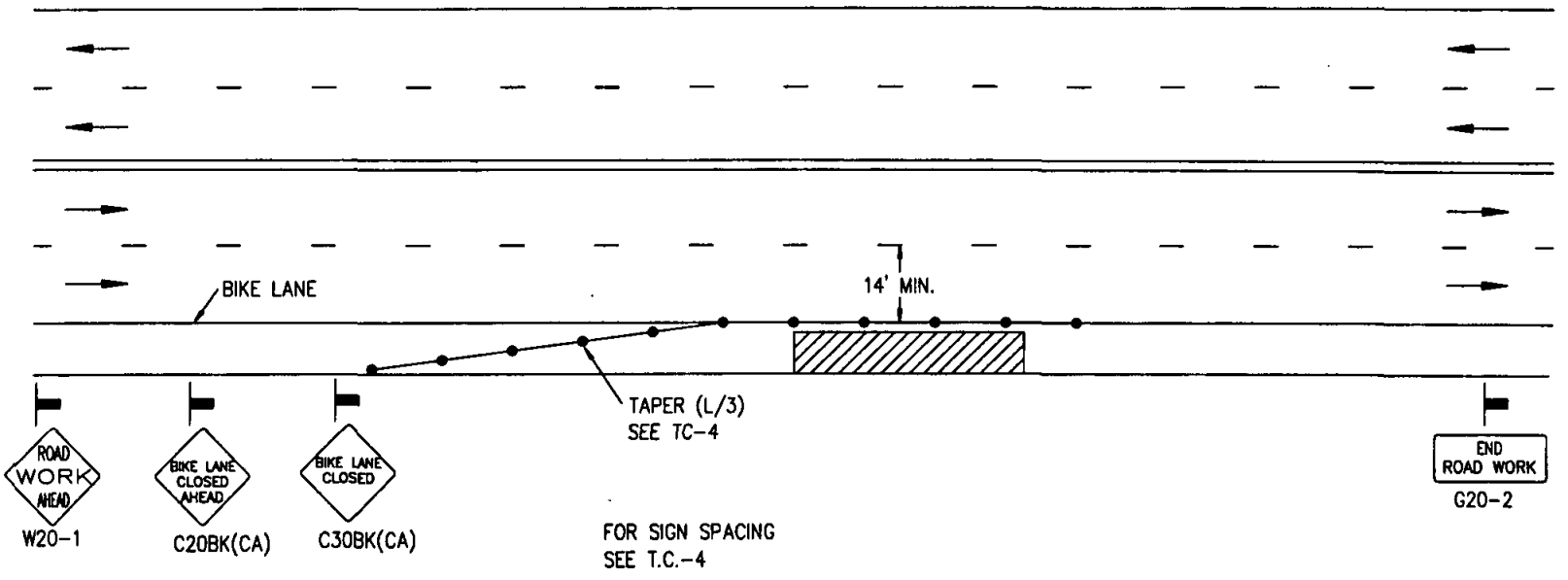

LEGEND

CONE | BARRICADE | FLAGGER | SIGN | FLASHING ARROW SIGN | WORK AREA | TRAFFIC DIRECTION

AGENCY ENGINEER'S COMMENTS

AGENCY USE

POSTED SPEED LIMIT	APPROACH SPEED	TAPER LENGTH	SPACING OF CONES	SIGN SPACING

SEE TC-4 FOR SIGN, CONE SPACING AND TAPER LENGTH

GENERAL NOTES

For hours of darkness, change cones to vertical barricades with steady burn lights.

This plan DOES NOT apply to signalized or multi-way stop intersections. Consult the local jurisdiction when preparing Traffic Control PLans near these intersections.

This plan MAY NOT apply when the work areas affect bike lanes, sidewalks, pedestrian access and curved or narrow roadways. Consult the approving agency when preparing the *Traffic Control Plan* or these areas.

nothing contained on this drawing shall prevent local jurisdictions from modifying, changing or adopting new specifications deemed necessary. Criteria for position, location and use of Traffic Control Devices is solely for the purpose of guidance to assist in the set up of the Traffic Control Plans.

TC-5 is required for all Traffic Control PLans.

APPLICANT USE

SUBMITTED BY:
NAME
COMPANY
ADDRESS
PHONE

Revision	By	Approved	Date
ORIGINAL DRAWING	CRH		4/06
		[illegible]	4/27/06

Revision	By	Approved	Date
DRAWING ORIGINAL	CRH		4/06
			4/27/06

SIDE OF ROAD WORK AREA

TYPICAL PEDESTRIAN CONTROL SIGNS

APPENDIX "A"
SAN DIEGO REGIONAL STANDARD

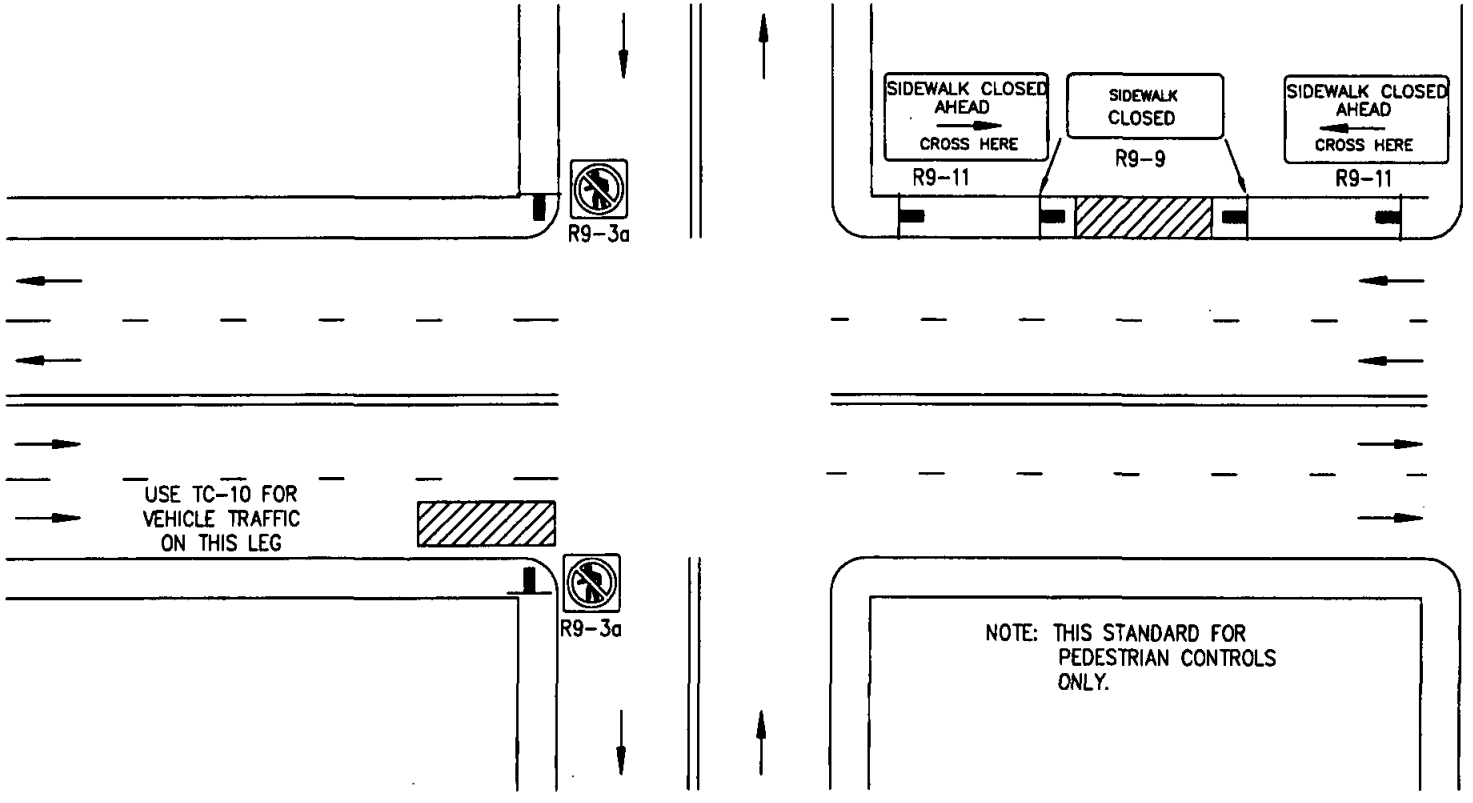

LEGEND

● CONE ⊢⊣ BARRICADE FLAGGER SIGN FLASHING ARROW SIGN WORK AREA TRAFFIC DIRECTION

AGENCY ENGINEER'S COMMENTS

AGENCY USE

SUBMITTED BY:
NAME
COMPANY
ADDRESS
PHONE

APPLICANT USE

POSTED SPEED LIMIT	APPROACH SPEED	TAPER LENGTH	SPACING OF CONES	SIGN SPACING

SEE TC-4 FOR SIGN, CONE SPACING AND TAPER LENGTH

GENERAL NOTES

For hours of darkness, change cones to vertical barricades with steady burn lights.

This plan DOES NOT apply to signalized or multi-way stop intersections. Consult the local jurisdiction when preparing Traffic Control PLans near these intersections.

This plan MAY NOT apply when the work areas affect bike lanes, sidewalks, pedestrian access and curved or narrow roadways. Consult the approving agency when preparing the Traffic Control Plan or these areas.

nothing contained on this drawing shall prevent local jurisdictions from modifying, changing or adopting new specifications deemed necessary. Criteria for position, location and use of Traffic Control Devices is solely for the purpose of guidance to assist in the set up of the Traffic Control Plans.

TC-5 is required for all Traffic Control PLans.

DRAWING NUMBER TC-41

DRAWING NUMBER TC-42

SIDE OF ROAD WORK AREA

MULTILANE ROADWAY WITH RAISED MEDIAN

APPENDIX "A"
SAN DIEGO REGIONAL STANDARD

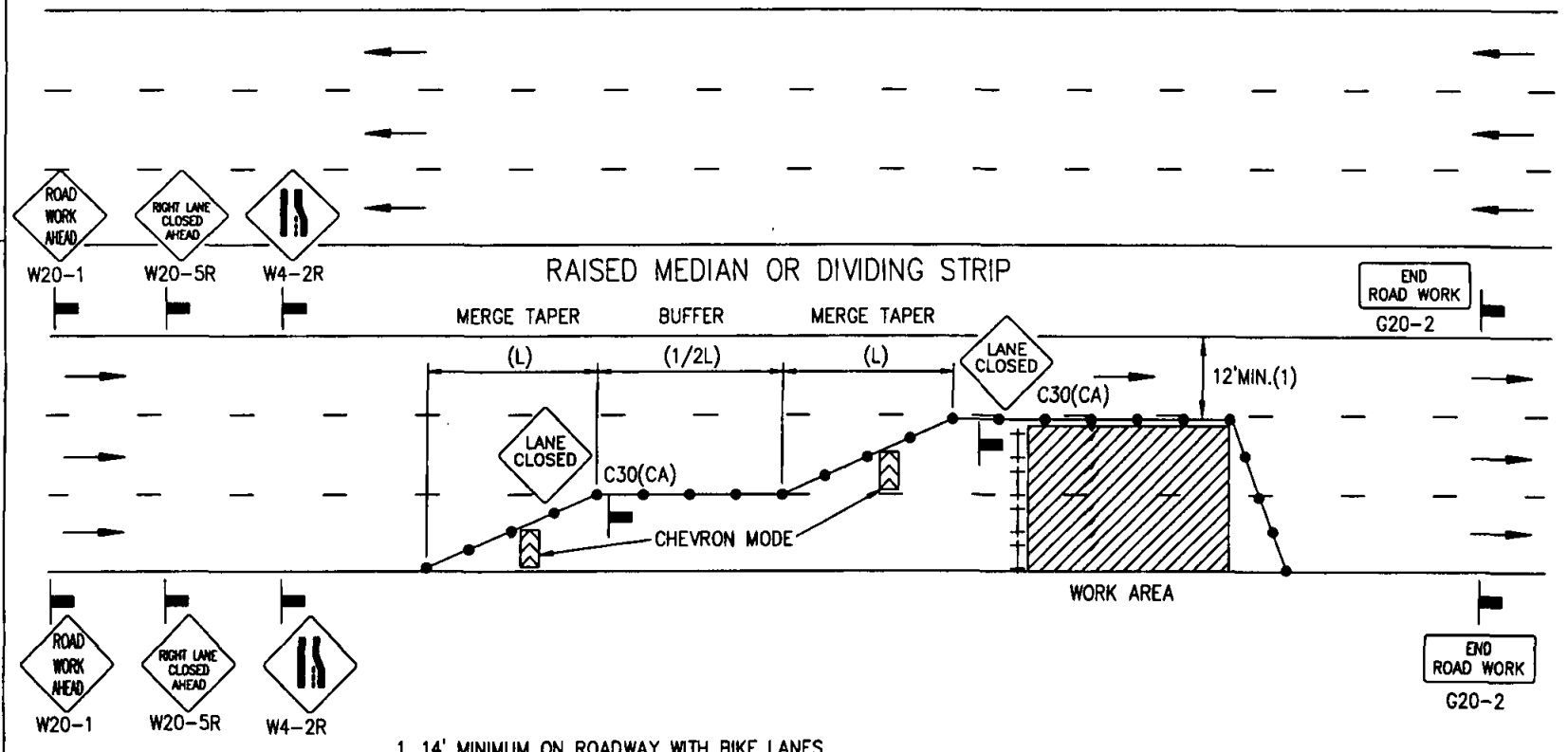

1. 14' MINIMUM ON ROADWAY WITH BIKE LANES

LEGEND

- CONE
- BARRICADE
- FLAGGER
- SIGN
- FLASHING ARROW SIGN
- WORK AREA
- TRAFFIC DIRECTION

AGENCY ENGINEER'S COMMENTS

AGENCY USE

POSTED SPEED LIMIT	APPROACH SPEED	TAPER LENGTH	SPACING OF CONES	SIGN SPACING

SEE TC-4 FOR SIGN, CONE SPACING AND TAPER LENGTH

GENERAL NOTES

For hours of darkness, change cones to vertical barricades with steady burn lights.

This plan DOES NOT apply to signalized or multi-way stop intersections. Consult the local jurisdiction when preparing Traffic Control PLans near these intersections.

This plan MAY NOT apply when the work areas affect bike lanes, sidewalks, pedestrian access and curved or narrow roadways. Consult the approving agency when preparing the Traffic Control Plan or these areas.

nothing contained on this drawing shall prevent local jurisdictions from modifying, changing or adopting new specifications deemed necessary. Criteria for position, location and use of Traffic Control Devices is solely for the purpose of guidance to assist in the set up of the Traffic Control Plans.

TC-5 is required for all Traffic Control PLans.

APPLICANT USE

SUBMITTED BY:
NAME
COMPANY
ADDRESS
PHONE

Revision	By	Approved	Date
DRAWING ORIGINAL	CRH		4/06
			4/27/06

Revision	By	Approved	Date
ORIGINAL	DRAWING CRH	[illegible]	4/06 4/27/06

WORK WITHIN INTERSECTION

RIGHT LANE / LEFT LANE

APPENDIX "A"
SAN DIEGO REGIONAL STANDARD

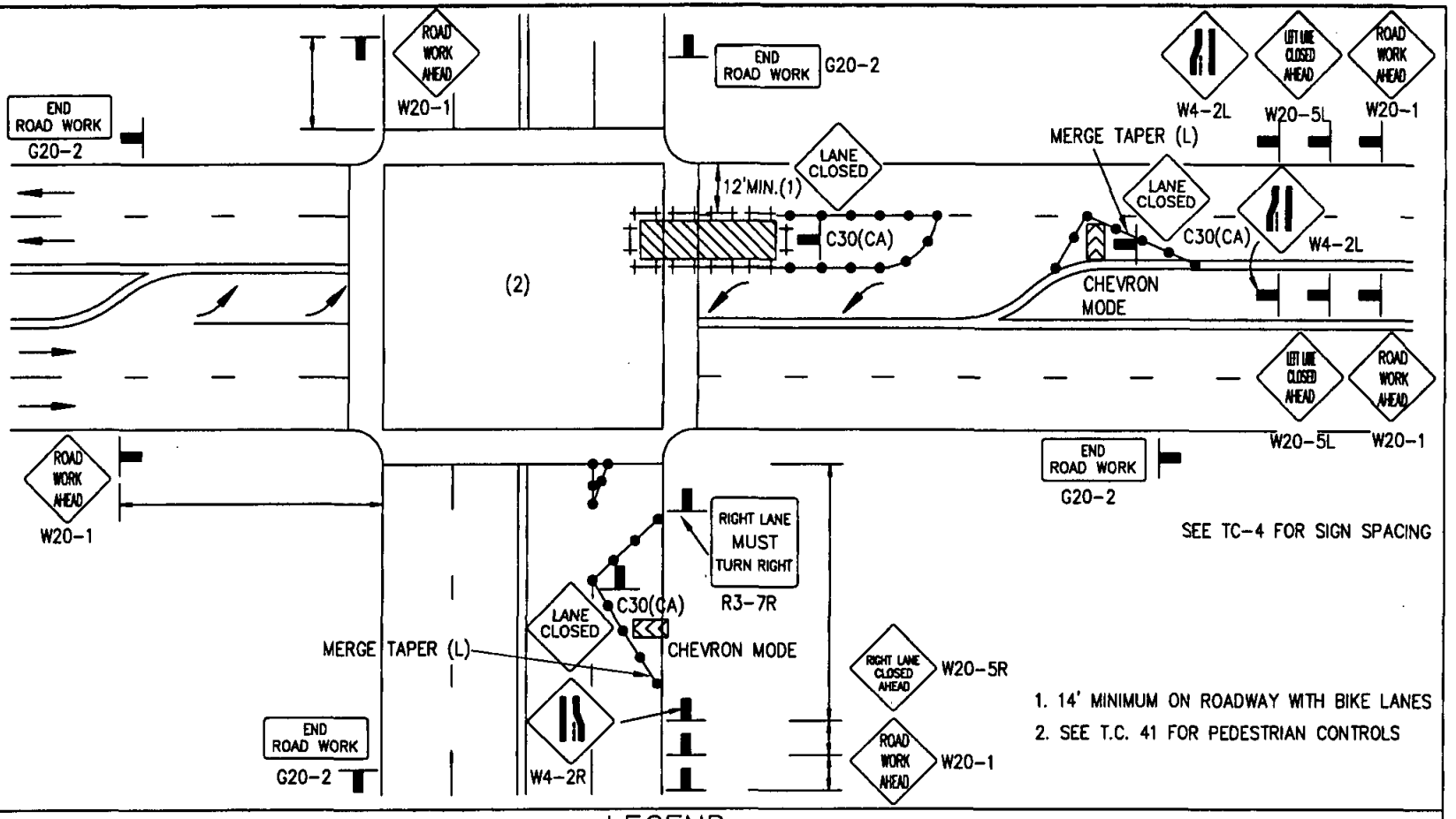

1. 14' MINIMUM ON ROADWAY WITH BIKE LANES
2. SEE T.C. 41 FOR PEDESTRIAN CONTROLS

LEGEND

● CONE ⊢⊣ BARRICADE FLAGGER SIGN FLASHING ARROW SIGN WORK AREA TRAFFIC DIRECTION

AGENCY ENGINEER'S COMMENTS

AGENCY USE

POSTED SPEED LIMIT	APPROACH SPEED	TAPER LENGTH	SPACING OF CONES	SIGN SPACING

SEE TC-4 FOR SIGN, CONE SPACING AND TAPER LENGTH

GENERAL NOTES

For hours of darkness, change cones to vertical barricades with steady burn lights.

This planMAY NOT apply to signalized or multi-way stop intersections. Consult the local jurisdiction when preparing Traffic Control PLans near these intersections.

This plan MAY NOT apply when the work areas affect bike lanes, sidewalks, pedestrian access and curved or narrow roadways. Consult the approving agency when preparing the Traffic Control Plan or these areas.

nothing contained on this drawing shall prevent local jurisdictions from modifying, changing or adopting new specifications deemed necessary. Criteria for position, location and use of Traffic Control Devices is solely for the purpose of guidance to assist in the set up of the Traffic Control Plans.

TC-5 is required for all Traffic Control PLans.

SUBMITTED BY:
NAME
COMPANY
ADDRESS
PHONE

PLICANT USE

DRAWING NUMBER TC-43

DRAWING NUMBER TC-44

TYPICAL SHOULDER CLOSURE

MULTILANE ROADWAY WITH RAISED MEDIAN

APPENDIX "A"
SAN DIEGO REGIONAL STANDARD

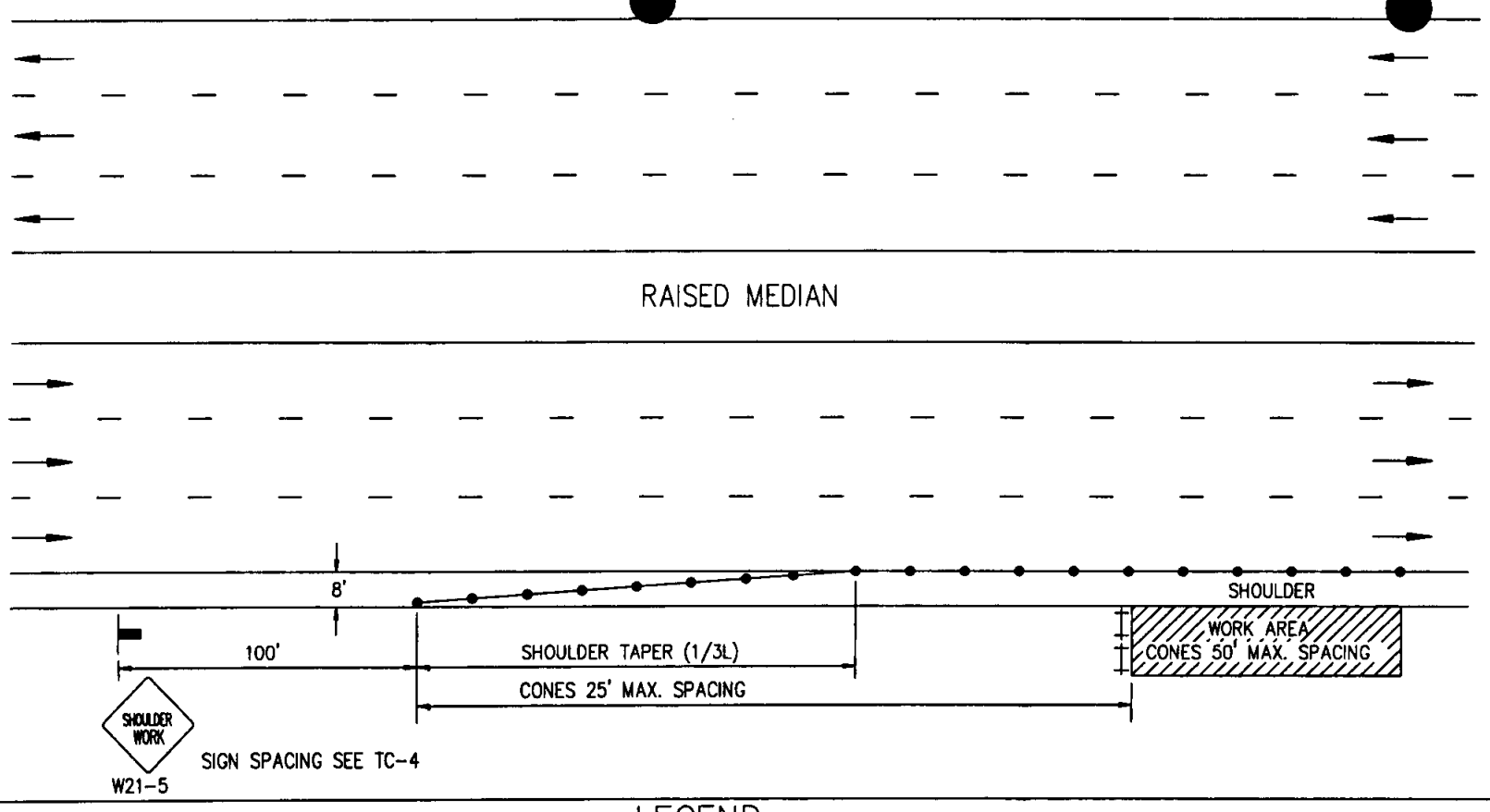

LEGEND

- CONE
- BARRICADE
- FLAGGER
- SIGN
- FLASHING ARROW SIGN
- WORK AREA
- TRAFFIC DIRECTION

AGENCY ENGINEER'S COMMENTS

AGENCY USE

POSTED SPEED LIMIT	APPROACH SPEED	TAPER LENGTH	SPACING OF CONES	SIGN SPACING

SEE TC-4 FOR SIGN, CONE SPACING AND TAPER LENGTH

GENERAL NOTES

For hours of darkness, change cones to vertical barricades with steady burn lights.

This plan DOES NOT apply to signalized or multi-way stop intersections. Consult the local jurisdiction when preparing Traffic Control PLans near these intersections.

This plan MAY NOT apply when the work areas affect bike lanes, sidewalks, pedestrian access and curved or narrow roadways. Consult the approving agency when preparing the Traffic Control Plan or these areas.

nothing contained on this drawing shall prevent local jurisdictions from modifying, changing or adopting new specifications deemed necessary. Criteria for position, location and use of Traffic Control Devices is solely for the purpose of guidance to assist in the set up of the Traffic Control Plans.

TC-5 is required for all Traffic Control PLans.

APPLICANT USE

SUBMITTED BY:
NAME
COMPANY
ADDRESS
PHONE

Revision	By	Approved	Date
DRAWING ORIGINAL	CRH		4/06
			4/27/06

INDEX

-A-

AIR AND VACUUM VALVE
- 1" and 2" WA-2
- 4" and 6" WA-4
- Enclosure WA-6
- Drip Irrigation I-36

AIR RELEASE VALVE
- Manual WA-1

ALLEY
- Apron G-17
- Concrete G-21

ANCHOR, PIPE
- Concrete SP-5, SP-7
- Thrust WT-1
- Valve WT-1
- Vertical Bend WT-1
- On-Grade Pipe Stabilization I-20

-B-

BACKFILL, TRENCH
- Irrigation I-25, I-26
- Sewer SP-2
- Storm Drain D-60
- Water Main WP-2
- NARROW TRENCHES M7, M7A

BACKFLOW PREVENTER
- Reduced Pressure WF-5, WR-1, WR-2
- Vacuum Breaker I-7

BARRICADE
- Continuous M-9

BARRIER
- Root Control L-6

BARRIER, CONCRETE
- Type 50 ..... M-42
- Type 50E M-43
- Type K M-44

BENCH MARK
- Brass Plug M-11

BERM
- Asphalt Concrete G-5

BLOCK, CONCRETE
- Anchor WT-1
- Thrust WT-1
- Valve WT-1

BLOW-OFF WATER
- 2" WB-1, WB-4, WB-5
- 4" and 6" WB-2, WB-3

BROW DITCH D-75

-C-

CATCH BASIN
- Corrugated Steel Pipe Types A & B D-16
- Grate Top, Type G D-8
- Type I D-29
- Type F D-7

CHANNEL, DRAINAGE
- Cutoff Wall D-72
- Debris Fence D-82
- Graded Earth Channel D-74
- Major Channel D-71
- Minor Channel D-70
- Pipe to Channel Connection D-73

CONCRETE
- Backfill, Sewer SP-3
- Collar, Pipe D-62
- Cradle, Sewer SP-3
- Encasement, Sewer SP-3, SP-9
- Protection, Sewer SP-3
- Lug, Concete D-63
- Mowing Strip L-3
- Removal and Replacement G-11
- Steps M-26
- Light Pole Pad L-5

CORRUGATED STEEL PIPE
- Inlets, Type A, B D-16, D-17
- Slotted Drain D-18, D-19

CULVERT, BOX
- Double D-77A, D-77B
- Miscellaneous Details D-81A, D-81B
- Single D-76A, D-76B
- Triple D-78A, D-78B
- Wingwalls, Type A, B, C D-79A, D-79B
- Wingwalls, Warped D-80A, D-80B

CURB AND GUTTER
- Combined G-2
- Median G-6
- Monolithic G-3
- Removal and Replacement G-11
- Rolled G-4
- Separate G-1

INDEX

CURB INLET
- Concrete Apron D-20
- Grate D-15
- Median, Type J D-45
- Notes and Details D-11
- Opening D-12
- Side Opening Only D-1, D-2, D-4
- Side Opening w/Gate D-3

CURB OUTLET
- Concrete, Type A D-25
- Pipe D-27

CURB RAMP
- Types A and B G-27
- Types A-1 and B-1 ..... G-28
- Type C G-29
- Type C-1 ..... G-30
- Type D G-31
- General Notes G-32

CURTAIN WALL D-38

CUTOFF WALL
- Alley Pavement G-23
- Channel D-72
- Street Pavement G-22
- Trench SP-5, SP-7

-D-

DATUMS M-12

DEBRIS FENCE D-82

DIKE, A.C. G-5

DISSIPATOR, ENERGY
- Concrete D-41, D-42, D-43
- Rip Rap D-40

DITCH,
- Brow, Type A and B D-75
- Terrace, Type C and D D-75

DOWNDRAIN
- Asphalt Concrete D-22
- Flume D-23
- Pipe D-24

DRINKING FOUNTAIN M-18

DRIVEWAY
- Commercial G-26
- Concrete G-14A, G-14B, G-14C
- Location G-15, G-16
- Width G-16

-E-

ENCASEMENT
- Sewer Pipe SP-3
- Sewer Pipe, Undercut SP-9

-F-

FENCE
- Chain Link M-6
- Debris Fence D-82
- Details M-20
- Tennis Court M-17

FIRE HYDRANT
- 6" Hydrant WF-1, WF-2
- Locations WF-4
- Markers M-19

FRAME
- Grate D-13
- Manhole M-1, M-2, M-3

-G-

GRATE
- Drainage D-15
- Frame D-13
- Tree L-4

GUARD RAIL, METAL BEAM

- Guard Rail Reference Note M-30

GUTTER
- Cross G-12
- Cross, Mid-Block G-13
- Separate from Curb G-1

-H-

HEADWALL
- Gravity Type D-32, D-33
- L Type D-36, D-37
- Straight, Type A, ... D-30, D-31
- Warped D-44
- Wing and U Type D-34, D-35

-I-

INLET APRON D-39

INDEX

INLET, DRAIN
- Corrugated Steel Pipe, Type A & B D-16, D-17
- Slotted, Corrugated Steel Pipe..... D-18, D-19

IRRIGATION
- Above Ground Installation I-20, I-23, I-24
- Controller I-17, I-18
- Head, Deep Root Tree Bubbler.....I-4
- Head, Fixed Riser..... I-1, I-2
- Head, Pop Up I-3
- Pull Box, Electrical.....I-15
- Trench Detail I-25, I-26

-J-

JOINT TRENCH M-15

-L-

LATERAL
- Sewer.....SS-1, SS-3, SS-4
- Sewer, Deep Cut SS-2
- Sewer, Repair SM-7

LIGHTING
- Grounding E-2
- Light Pole Pad L-5
- Standard E-1

LUG, CONCRETE.....D-63

-M-

MANHOLE, FRAME AND COVER
- 24" Heavy Duty M-1
- 24" Light Duty M-2
- 36" Concentric Covers..... M-3
- Locking Device M-4

MANHOLE, SEWER
- 4' x 3' Diameter..... SM-1, SM-3, SM-4, SM-5
- 5' x 3' Diameter..... SM-2, SM-3, SM-4, SM-5
- Coating & Lining SM-7
- Abandonment SM-8

MEDIAN
- Curb Inlet D-45
- Curbs and Gutter G-6

METER BOX LOCATION.....WS-3

METRIC EQUIVALENTS M-14

MONUMENT
- Bench Mark M-11
- Street Survey.....M-10
- Survey M-13

MOWING STRIP
- Concrete L-3

-P-

PARKING, DISABLED
- Striping & Marking.....M-27A,B & C,M-29
- Sign M-28A, M-28B

PAVEMENT, CONCRETE
- Alley Section.....G-21
- Joints G-10
- Width 40' or Less..... G-18
- Width 40' to 62'..... G-19
- Width 53' to 69'..... G-20

PEDESTAL
- Electrical E-33
- Irrigation Controller I-17, I-18

PIPE
- Collar D-62
- Lug..... D-63
- Rounded Ends..... D-61
- Slotted D-18, D-19

PLANTING
- Root Control Barrier L-6
- Shrub.....L-2
- Tree L-1

POST
- Demountable M-16
- Guard.....M-9
- Protection WM-4

-R-

RAILING
- Pedestrian.....M-24, M-25

RETAINING WALL
- Concrete C-11, C-12
- Details, Concrete..... C-13, C-14
- Details, Gravity C-10
- Details, Masonry..... C-8
- Gravity C-9
- Masonry..... C-1, C-2, C-3, C-4, C-5, C-6
- Masonry General Notes C-7

-S-

SEWER CLEANOUT SC-1

INDEX

SEWER LATERAL.....SS-1, SS-2, SS-3, SS-4

SIDEWALK
- Drain Outlet.....D-25
- Joint Details.....G-10
- Joint Locations.....G-9
- Monolithic Curb.....G-3
- Pipe Underdrain.....D-27
- Removal and Replacement.....G-11
- Typical Section.....G-3, G-7

STAKING
- Tree.....L-1

STEPS
- Concrete.....M-26

STREET LIGHT
- Standard.....E-1
- Grounding.....E-2
- Foundation.....E-2

-T-

TAPE LOCATOR, METALLIC
- Sewer Pipe.....SP-1
- Water Pipe.....WP-1

TENNIS COURT FENCE.....M-17

THRUST ANCHORS
- Bearing Area.....WT-1
- Concrete.....WT-1

TRENCH DETAILS
- Irrigation.....I-25, I-26
- Joint Trench Location.....M-15
- Narrow, Resurfacing.....G-33
- Resurfacing.....G-24, G-25
- Sewer.....SP-2
- Slurry Backfill.....G-36
- Storm Drain.....D-60
- Water Main.....WP-2

-U-

UNDERDRAIN, SIDEWALK
- Pipe.....D-27
- Concrete, Reinforced.....D-25

UNDERGROUND TYPICAL LOCATION
- Location.....M-21
- Replacement.....M-21
- Upgrade.....M-21

UTILITY LOCATIONS
- Collector Streets.....M-22
- Expressways.....M-23
- Joint Trench.....M-15
- Local Streets.....M-22
- Major Streets.....M-23
- Prime Arterials.....M-23

-V-

VALVE, IRRIGATION
- Air/Vacuum Relief.....I-36
- Flush, Drip.....I-37
- Isolation, Ball.....I-11
- Isolation, Globe.....I-13
- Manifold Assembly, Brass Pipe.....I-33
- Manifold Assembly, PVC Pipe.....I-32
- Master.....I-10
- Quick Coupling.....I-5
- Remote Control.....I-14
- Remote Control, Drip.....I-35

-W-

WATER SERVICE
- 1".....WS-1
- 2".....WS-2

WIRE
- Irrigation Control Wire/Cable.....I-16
- Electrical Pull Box, Irrigation.....I-15