Mitchell J architecture

AT&T

SD0717 OLD HWY. 80

41749 OLD HIGHWAY 80, BOULEVARD CA. 91905

LEGAL DESCRIPTION

LEGAL DESCRIPTION:

ALL THAT CERTAIN REAL PROPERTY SITUATED IN THE COUNTY OF SAN DIEGO, STATE OF CALIFORNIA, DESCRIBED AS FOLLOWS:

THE NORTHWEST QUARTER OF THE SOUTHEAST QUARTER OF SECTION 27, TOWNSHIP 17 SOUTH, RANGE 7 EAST, SAN BERNARDINO BASE AND MERIDIAN, IN THE COUNTY OF SAN DIEGO, STATE OF CALIFORNIA, ACCORDING TO UNITED STATES GOVERNMENT SURVEY APPROVED SEPTEMBER 6, 1880.

EXCEPTING THEREFROM THAT PORTION THEREOF LYING NORTH AND EAST OF THE CENTER LINE OF THE CALIFORNIA STATE HIGHWAY AS THE SAME IS SHOWN ON MAP THEREOF FILED IN THE OFFICE OF THE COUNTY RECORDER OF SAID SAN DIEGO COUNT AS MISCELLANEOUS MAP NO. 118.

ALSO EXCEPTING THE SOUTH 200 FEET.

ALSO EXCEPTING THAT PORTION DESCRIBED AS FOLLOWS:

BEGINNING AT THE SOUTHWEST CORNER OF SAID NORTHWEST QUARTER OF THE SOUTHEAST QUARTER; THENCE NORTH ALONG THE WEST LINE OF SAID NORTHWEST QUARTER TO THE NORTH LINE OF THE SOUTH 200 FEET THEREOF; THENCE EAST ALONG SAID NORTH LINE AND PARALLEL WITH SOUTH LINE OF SAID NORTHWEST QUARTER 400 FEET TO THE TRUE POINT OF BEGINNING; THENCE NORTH 100 FEET; THENCE EAST TO THE CENTER LINE OF THE ABOVE DESCRIBED STATE HIGHWAY; THENCE SOUTHERLY ALONG SAID CENTER LINE TO SAID NORTH LINE OF THE SOUTH 200 FEET OF SAID NORTHWEST QUARTER; THENCE WEST ALONG SAID NORTH LINE TO THE TRUE POINT OF BEGINNING.

DIRECTIONS TO SITE

DIRECTIONS TO SITE FROM AT&T OFFICE:

STARTING FROM SAN DIEGO AT&T:

DEPART PACIFIC CENTER BLVD TOWARD BARNES CANYON RD
TURN RIGHT ONTO PACIFIC HEIGHTS BLVD.
TURN RIGHT ONTO MIRA MESA BLVD.
TAKE RAMP RIGHT AND FOLLOW SIGNS FOR I-805 SOUTH / INLAND FWY / JACOB DEKEMA FWY.
TAKE RAMP RIGHT FOR I-8 EAST / MISSION VALLEY FWY TOWARD EL CENTRO.
AT EXIT 45,
TAKE RAMP RIGHT FOR SR-94 TOWARD MANZANITA / BOULEVARD.
TURN RIGHT ONTO SR-94 / RIBBONWOOD RD.
TURN LEFT ONTO OLD HIGHWAY 80
ARRIVE AT 41749 OLD HIGHWAY 80, BOULEVARD, CA 91905.

VICINITY MAP

CLIENT APPROVALS

RF INITIALS: _____ DATE

ZONING/PLANNING INITIALS: _____ DATE

A/E MANAGER INITIALS: _____ DATE

CONSTRUCTION INITIALS: _____ DATE

SITE ACQUISITION INITIALS: _____ DATE

LANDLORD INITIALS: _____ DATE

TITLE 24 COMPLIANCE

ACCESSIBILITY DISCLAIMER

THE FACILITY IS UNMANNED AND NOT FOR HUMAN HABITATION. A TECHNICIAN WILL VISIT THE SITE AS REQUIRED FOR ROUTINE MAINTENANCE. THE PROJECT WILL NOT RESULT IN ANY SIGNIFICANT DISTURBANCE OR EFFECT ON DRAINAGE; NO SANITARY SEWER SERVICE, POTABLE WATER, OR TRASH DISPOSAL IS REQUIRED AND NO COMMERCIAL SIGNAGE IS PROPOSED.

EXCEPTION TO SECTION 10-103

THIS PROJECT HAS LESS THAN 1,000 SQ. FT. OF CONDITIONED SPACE AND HAS AN OCCUPANT LOAD OF LESS THAN 49 PERSONS AND IS EXCEPT FROM THE DOCUMENTATION REQUIREMENTS OF SECTION 10-103 OF 2005 BEES.

SIGNED _____

LICENSED ARCHITECT MITCHELL J. CAMPION No. C20355 EXP. 3-31-13 STATE OF CALIFORNIA

APPLICABLE CODES

APPLICABLE CODES

ALL WORK SHALL COMPLY WITH ALL APPLICABLE CODES INCLUDING BUT NOT LIMITED TO:

1.-2010 CALIFORNIA BUILDING CODE (CBC) / 2009 INTERNATIONAL BUILDING CODE (IBC)

2. 2010 CALIFORNIA RESIDENTIAL CODE (CRC) / 2009 INTERNATIONAL RESIDENTIAL CODE (IRC)

3. 2010 CALIFORNIA ELECTRICAL CODE (CEC) / 2008 NATIONAL ELECTRICAL CODE (NEC)

4. 2010 CALIFORNIA MECHANICAL CODE (CMC) / 2009 UNIFORM MECHANICAL CODE (UMC)

5. 2010 CALIFORNIA PLUMBING CODE (CPC) / 2009 UNIFORM PLUMBING CODE (UPC)

6. 2010 CALIFORNIA FIRE CODE (CFC) / 2009 (IFC)

7. 2010 CALIFORNIA GREEN BUILDINGS STANDARDS CODE

8. 2008 BUILDING ENERGY EFFICIENCY STANDARDS

OPERATING FREQUENCIES			
	LTE	GSM	UMTS
Tx	704.0 - 716.0 MHz	880.2 - 891.4 MHz 1850.0 - 1852.4 MHz	869.2 - 874.6 MHz 874.6 - 879.8 MHz 1945.0 - 1950.0 MHz 1970.0 - 1980.0 MHz
Rx	734.0 - 746.0 MHz	845.2 - 846.4 MHz 1670.0 - 1672.4 MHz	824.2 - 829.4 MHz 829.6 - 834.8 MHz 1865 - 1869.8 MHz 1890.2 - 1899.8 MHz
MAX EIRP		700 MHz: 500 WATTS 850 MHz: 54 1900 MHz: 54.5 WATTS	

PROJECT SUMMARY

SITE NAME
OLD HWY 80

SITE NUMBER
SD0717

SITE ADDRESS
41749 OLD HIGHWAY 80
BOULEVARD, CA 91905

APPLICANT
AT&T WIRELESS SERVICES
5738 PACIFIC CENTER BLVD
SAN DIEGO CA, 92121

AT&T PROJECT MANAGER
KEVIN McGEE
7337 TRADE STREET,
3ND FLOOR
SAN DIEGO, CA 92121

EXISTING USE/OCCUPANCY
U

PROPOSED OCCUPANCY
B

(E) TYPE OF CONSTRUCTION
V-B

TELECOMMUNICATION CARRIERS
NO OTHER CARRIERS CURRENTLY LOCATED ON SUBJECT SITE.

PROPERTY OWNER
CONSUELO RUIZ
(619) 766-4870

A.P.N.
615-030-10-00

ZONING
S-92

SPRINKLERED
NO

JURISDICTION:
COUNTY OF SAN DIEGO

GROUND ELEVATION
3270' AMSL

PROJECT DESCRIPTION:

PROPOSED INSTALLATION OF AN AT&T WIRELESS CARRIER FACILITY CONSISTING OF:

- INSTALLATION OF A 21'-4" X 21'-4" CMU ENCLOSURE
- INSTALLATION OF 9 CABINETS
- INSTALLATION OF 2 GPS ANTENNAS
- INSTALLATION OF A 45'-0" HIGH FAUX WATER TANK TOWER
- INSTALLATION OF (16) AT&T 8'-0" ANTENNAS IN FAUX WATER TANK
- INSTALLATION OF 32 RRU'S IN FAUX WATER TANK

CONTRACTOR SHALL VERIFY ALL PLANS AND EXISTING DIMENSIONS AND CONDITIONS ON THE JOB SITE AND SHALL IMMEDIATELY NOTIFY THE ARCHITECT IN WRITING OF ANY DISCREPANCIES BEFORE PROCEEDING WITH THE WORK OR BE RESPONSIBLE FOR SAME.

CONSULTANT TEAM

ARCHITECTS

MITCHELL J. ARCHITECTURE
4883 RONSON COURT, SUITE N
SAN DIEGO, CA 92111
TEL: (858) 650-3150
FAX: (858) 650-3140

CONTACT - JD NEHMAN (PROJECT MANAGER)

PROJECT MANAGER

GOODMAN NETWORKS
SAN DIEGO, CA 92121

CONTACT:
GAVIN TAI IRISH
(972) 294-0373

PLANNING

PLANCOM, INC.
302 STATE PLACE
ESCONDIDO, CA 92029

CONTACT:
GREG MOORAD
(858) 603-2336

SHEET INDEX

Sheet List Table

Sheet Number	Sheet Title
G-001	TITLE SHEET - PROJECT INFORMATION & VICINITY MAP
A-101	SITE PLAN AND NOTES
A-201	EXTERIOR ELEVATIONS
A-202	EXTERIOR ELEVATIONS
D-501	ANTENNA & EQUIPMENT LAYOUT PLAN
D-502	ANTENNA DETAILS
D-503	CSRF LAYOUT AND COAX SCHEDULE
C-1	SURVEY PLAN

SDC PDS RCVD 01-10-13

P12-017

P12-017

No.	Revision / Issue	Date
A	PRELIM ZD	07-27-12
B	90% ZD Review	08-10-12
C	100% ZD Review	08-22-12
D	ZD Client Comments	08-27-12
1	Planning Comments	12-17-12

Title Sheet, Project Information & Vicinity Map

OLD HWY 80
SD0717
41749 OLD HIGHWAY 80
BOULEVARD, CA. 91905

AT&T

Mitchell J architecture

MITCHELL J. ARCHITECTURE, INC.
4883 Ronson Court, Suite N
San Diego, CA 92111
858.650.3150 (pv) / 858.650.3140 (fax)

These drawings & specifications are the property & copyright of Mitchell J. Architecture, Inc. and shall not be reused, in whole or in part, for any other project without written authorization from Mitchell J. Architecture, Inc.

LICENSED ARCHITECT MITCHELL J. CAMPION No. C20355 EXP. 3-31-13 STATE OF CALIFORNIA

Project	SD0717
Date	07-27-12
Drawn By	PC
Checked By	JD
Scale	NO SCALE

Mitchell J. Architecture

G-001

MCMXCVII MCMXCVII MCMXCVII MCMXCVII

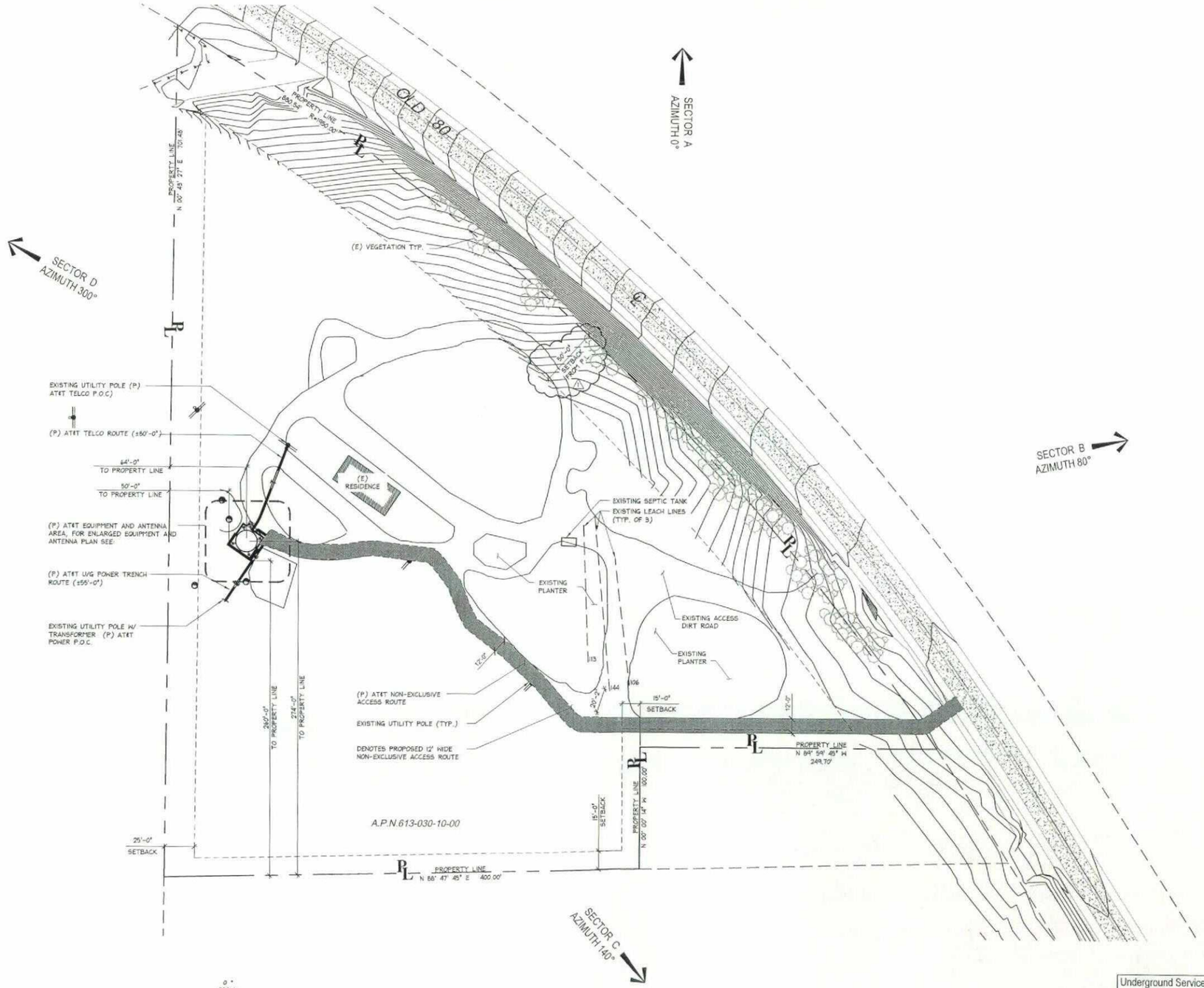

North

1 **SITE PLAN**
SCALE: 1"=40'-0"

Underground Service Alert
Call: TOLL FREE
1-800
422-4133
TWO WORKING DAYS BEFORE YOU DIG
NOTIFY DIG-ALERT OR PRIVATE LOCATING COMPANY PRIOR TO ANY EXCAVATING OR TRENCHING

No.	Revision / Issue	Date
A	PRELIM ZD	07-27-12
B	90% ZD Review	08-10-12
C	100% ZD Review	08-22-12
D	ZD Client Comments	08-27-12
1	Planning Comments	12-17-12

SITE PLAN & NOTES

MITCHELL J. ARCHITECTURE, INC.
4663 Ronson Court, Suite N
San Diego, CA 92111
858.650.3131 (ph) / 858.650.3140 (fax)

These drawings & specifications are the property & copyright of Mitchell J. Architecture, Inc. & shall not be used for any purpose not specifically agreed to in writing by Mitchell J. Architecture, Inc. These documents are not to be used by any other party than those to whom they are addressed, or for any purpose other than that for which they are intended, without the written consent of Mitchell J. Architecture, Inc.

AT&T

OLD HWY 80
SD0717
41749 OLD HIGHWAY 80
BOULEVARD CA, 91905

Mitchell J. architecture

LICENSED ARCHITECT
MITCHELL J. CAMPIONA
No. C20355
REN. 3-31-13
STATE OF CALIFORNIA

Project	SD0717
Date	07-27-12
Drawn By	PC
Checked By	JD
Scale	AS NOTED

Mitchell J. Architecture

A-101

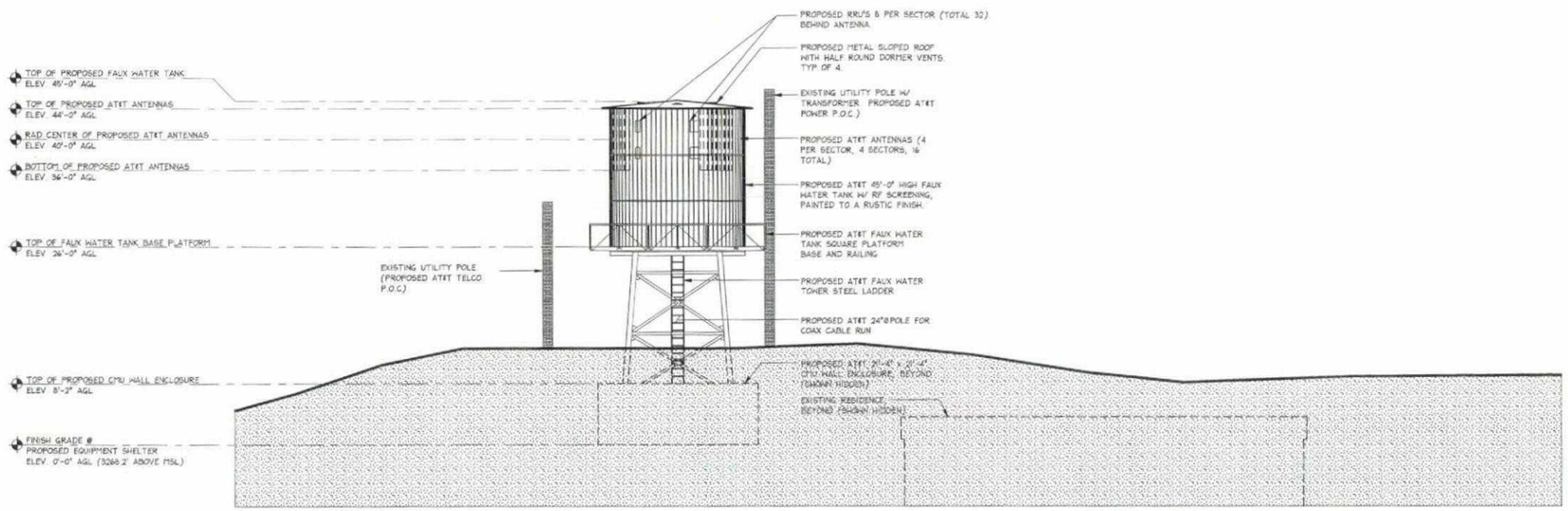

1 **SOUTH ELEVATION**
SCALE: 1/16"=1'-0"

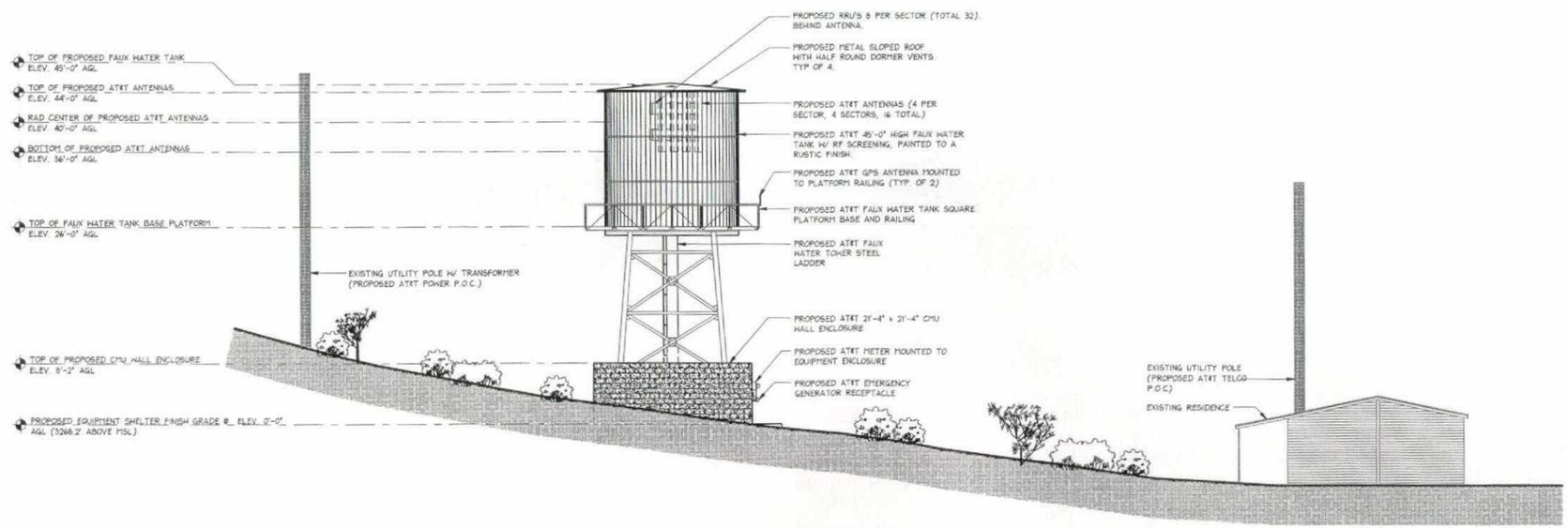

2 **EAST ELEVATION**
SCALE: 1/16"=1'-0"

No.	Revision / Issue	Date
A	PRELIM ZD	07-27-12
B	90% ZD Review	08-10-12
C	100% ZD Review	08-22-12
D	ZD Client Comments	08-27-12
△	Planning Comments	12-17-12

EXTERIOR ELEVATIONS

OLD HWY 80
SD0717
41749 OLD HIGHWAY 80
BOULEVARD CA. 91905

AT&T

Mitchell J. architecture

MITCHELL J. ARCHITECTURE, INC.
4853 Ronson Court, Suite N
San Diego, CA 92111
858.650.3130 (ph) / 858.650.3140 (fax)

LICENSED ARCHITECT
MITCHELL J. CAMPAGNA
No. C20355
REN. 3-31-13
STATE OF CALIFORNIA

Project	SD0717
Date	07-27-12
Drawn By	PC
Checked By	JD
Scale	AS NOTED

Mitchell J. Architecture

A-201

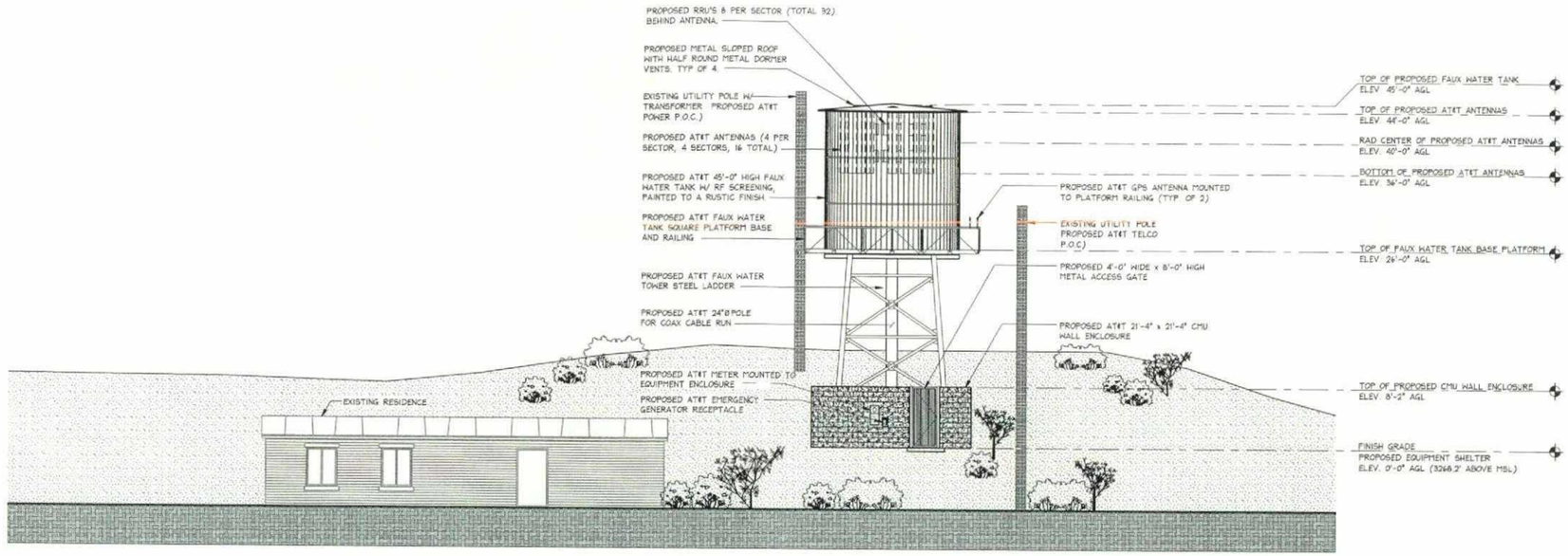

01 **NORTH ELEVATION**
SCALE: 1/16"=1'-0"

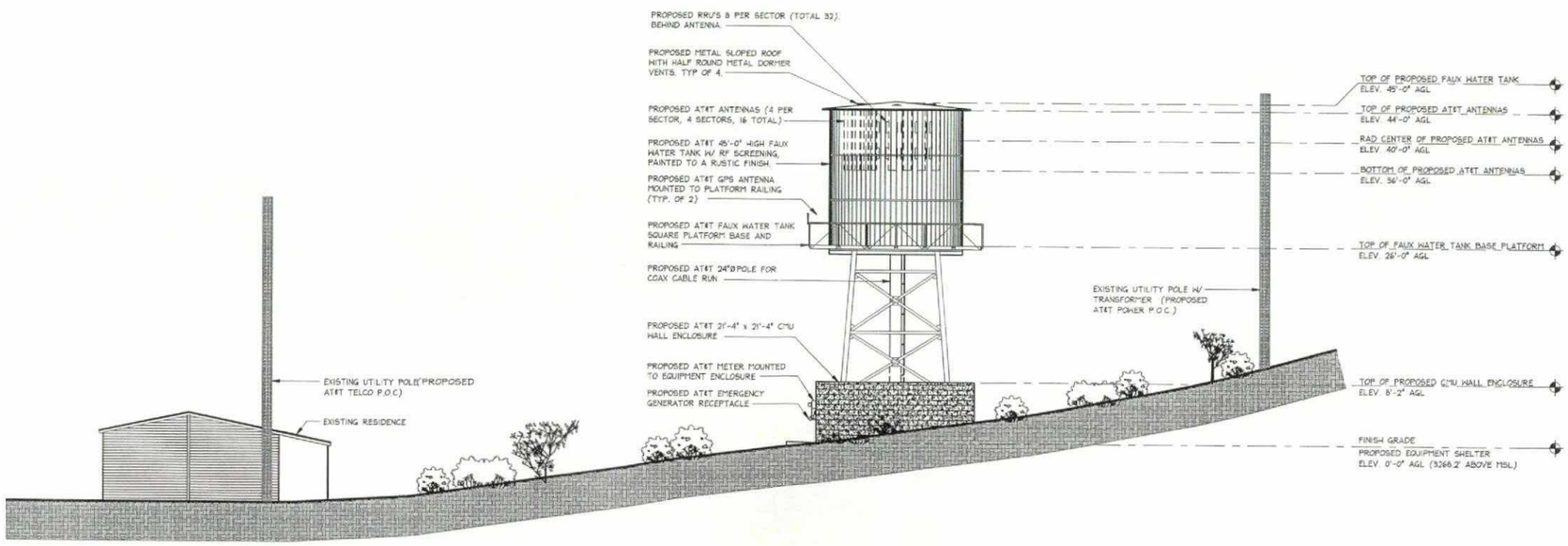

02 **WEST ELEVATION**
SCALE: 1/16"=1'-0"

No.	Revision / Issue	Date
A	PRELIM ZD	07-27-12
B	90% ZD Review	08-10-12
C	100% ZD Review	08-22-12
D	ZD Client Comments	08-27-12
1	Planning Comments	12-17-12

EXTERIOR ELEVATIONS

MITCHELL J. ARCHITECTURE, INC.
4883 Ronson Court, Suite H
San Diego, CA 92111
858.650.3130 (ph) / 858.650.3140 (fax)

Mitchell J. architecture

AT&T

OLD HWY 80
SD0717
41749 OLD HIGHWAY 80
BOULEVARD CA. 91905

architecture

LICENSED ARCHITECT
MITCHELL J. CAMPAGNA
No. C20355
REN. 3-31-13
STATE OF CALIFORNIA

Project	SD0717
Date	07-27-12
Drawn By	PC
Checked By	JD
Scale	AS NOTED

Mitchell J. Architecture

A-202

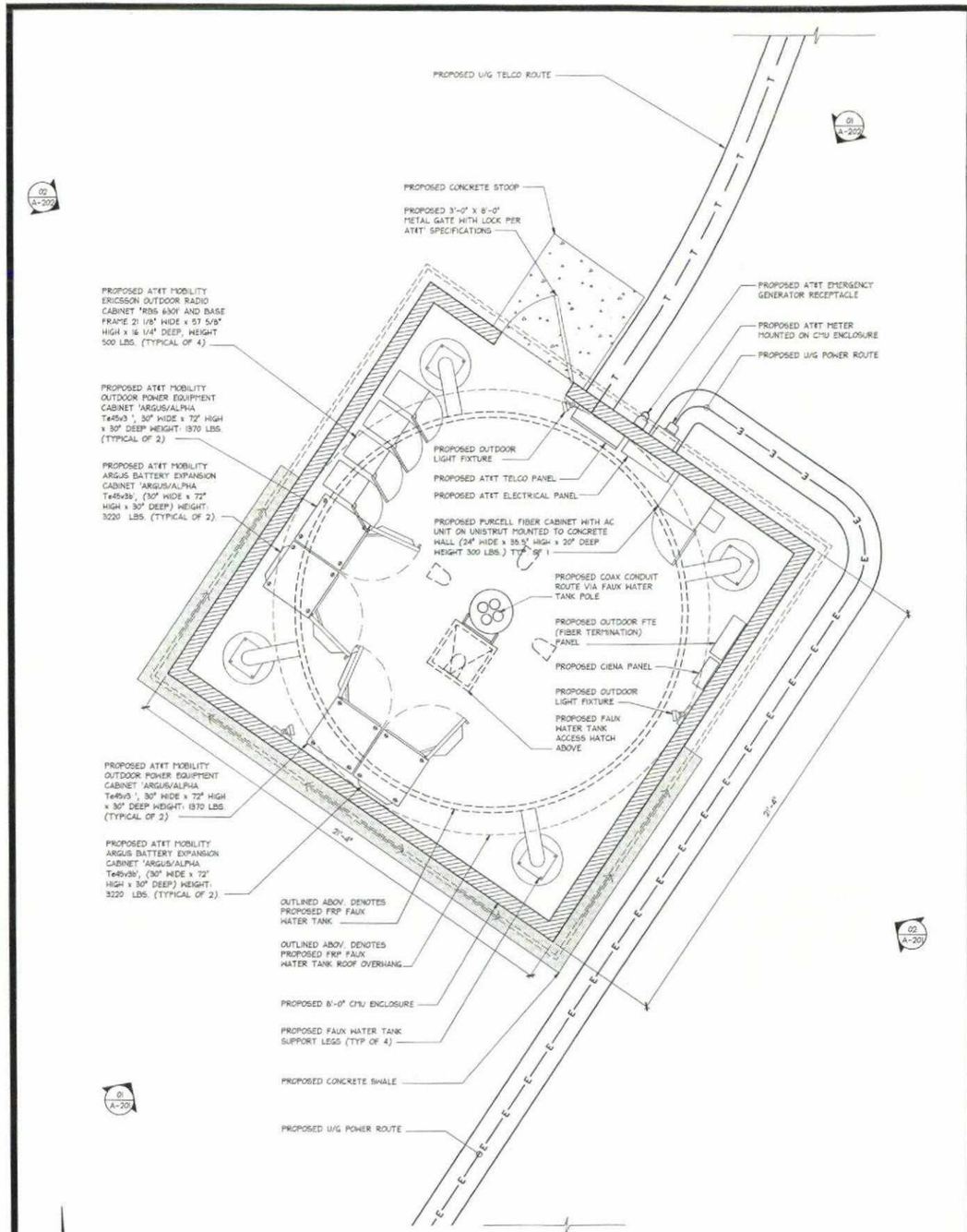

NORTH

01 EQUIPMENT LAYOUT PLAN-GROUND LEVEL

SCALE: 3/8"=1'-0"

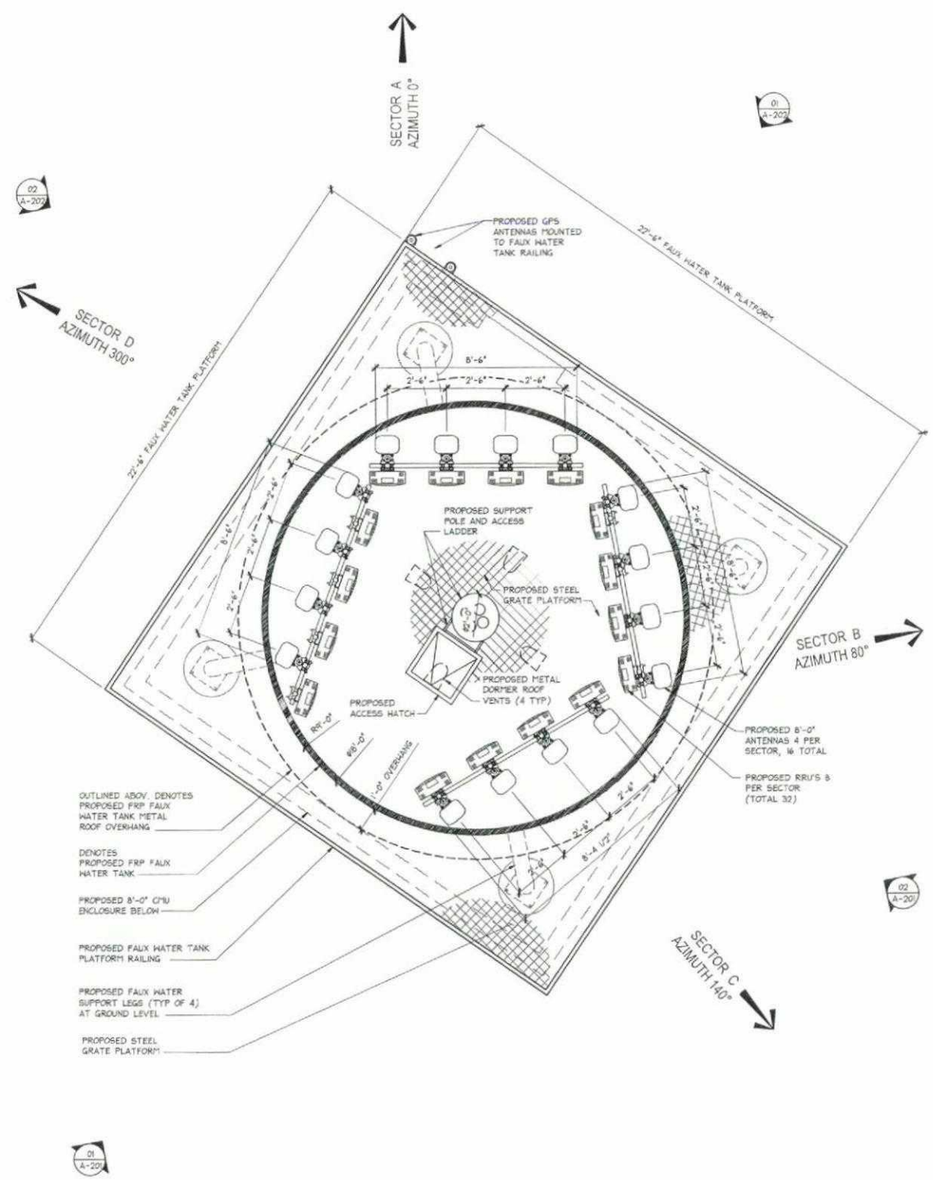

NORTH

02 ANTENNA LAYOUT PLAN-FAUX WATER TANK

SCALE: 3/8"=1'-0"

No.	Revision / Issue	Date
A	PRELIM ZD	07-27-12
B	50% ZD Review	08-10-12
C	100% ZD Review	08-22-12
D	ZD Client Comments	08-27-12
1	Planning Comments	12-17-12

ANTENNA AND EQUIPMENT LAYOUT PLAN

OLD HWY 80
SD0717
41749 OLD HIGHWAY 80
BOULEVARD CA, 91905

AT&T

Mitchell J. Architecture

MITCHELL J. ARCHITECTURE, INC.
4165 Spring Street, Suite N
San Diego, CA 92111
858.650.3130 (ph) / 858.650.3140 (fax)

These drawings & specifications are the property of Mitchell J. Architecture, Inc. and must be returned on request. They shall not be used by any person for any purpose other than those agreed to in writing by Mitchell J. Architecture, Inc.

LICENSED ARCHITECT
MITCHELL J. CARDONA
No. C20355
EXP. 2-31-13
STATE OF CALIFORNIA

Project	SD0717
Date	07-27-12
Drawn By	PC
Checked By	JD
Scale	AS NOTED

Mitchell J. Architecture

D-501

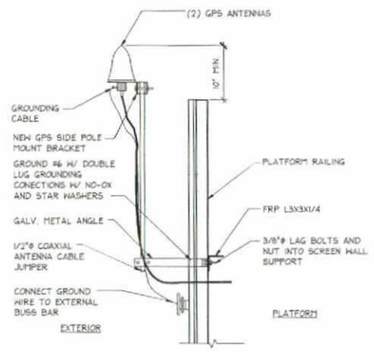

06 GPS ANTENNA
SCALE: 1"=1'-0"

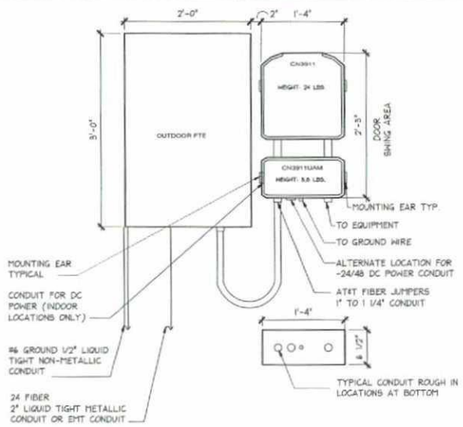

07 CIENA/FTE PANEL
SCALE: 1"=1'-0"

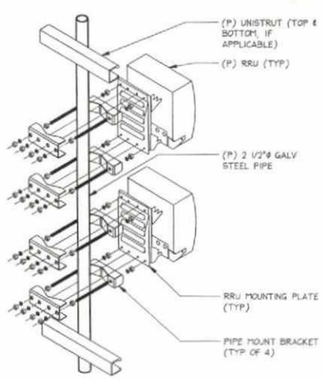

ERICSSON RRUS-11

DIMENSIONS, HxDxW:	431x184x452mm (17"x7.2"x17.8")
POWER CONSUMPTION:	200 WATTS
TOTAL WEIGHT:	55 lbs
TEMPERATURE:	-40° TO 55° C

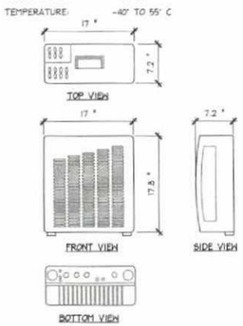

08 RRU SPECIFICATIONS-ATTACHMENT
SCALE: 1"=1'-0"

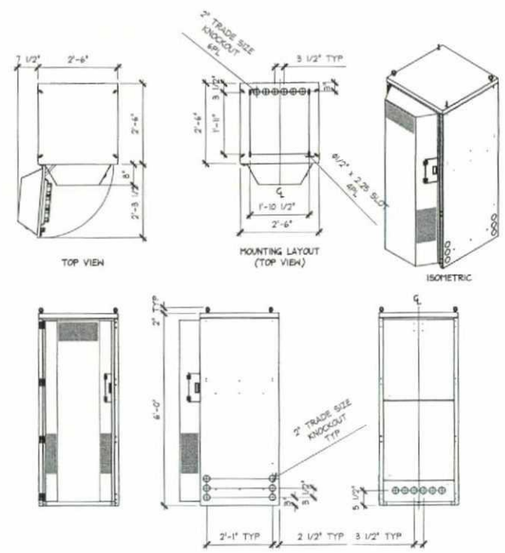

04 ALPHA POWER NODE CABINET
SCALE: 1/2" = 1'-0"

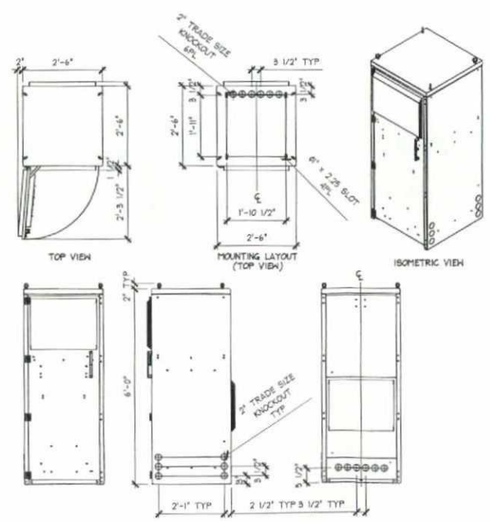

05 ALPHA BATTERY CABINET
SCALE: 1/2" = 1'-0"

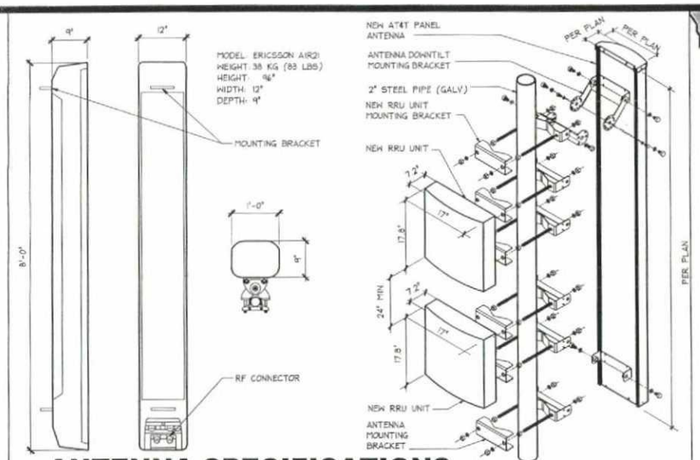

01 ANTENNA SPECIFICATIONS
SCALE: 3/4" = 1'-0"

ERICSSON RDS 6301

DIMENSIONS, HxDxW:	410x538x1465mm (1'4"x1'9"x4'9")
WEIGHT:	AC POWERED 264 lbs, DC POWERED 176 lbs (FULLY EQUIPPED), MAX WEIGHT PER PIECE 59.4 lbs.

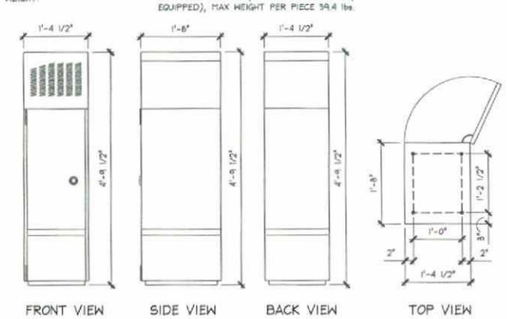

02 6301 SPECIFICATIONS
SCALE: 3/4"=1'-0"

PURCELL SYSTEMS
HEIGHT = 32.5"
WIDTH = 24.0"
DEPTH = 21.5"
WEIGHT = 351 lbs

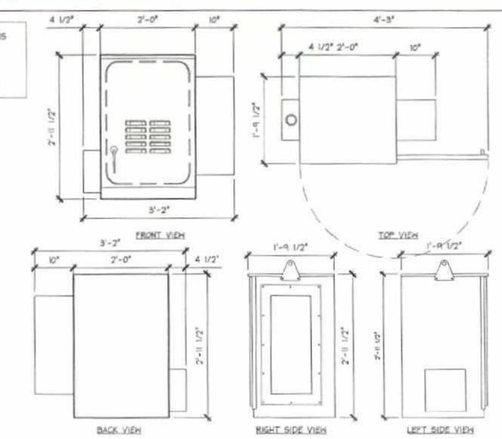

03 TELCO PURCELL SPECIFICATIONS
SCALE: 3/4"=1'-0"

No.	Revision / Issue	Date
A	PRELIM ZD	07-27-12
B	90% ZD Review	08-10-12
C	100% ZD Review	08-22-12
D	ZD Client Comments	08-27-12
1	Planning Comments	12-17-12

ANTENNA DETAILS

MITCHELL J. ARCHITECTURE, INC.
4683 Beeson Court, Suite N
Lake Oswego, OR 97035
858.850.3130 (ph) / 858.850.3140 (fax)

These drawings & specifications are the property & copyright of Mitchell J. Architecture and may not be reused on other projects or extended to other locations or projects except by agreement in writing by and with the express permission of the owner.

Mitchell J. Architecture

AT&T

OLD HWY 80
SD0717
41749 OLD HIGHWAY 80
BOULEVARD CA. 91905

LICENSED ARCHITECT
MICHAEL J. CAMPANA
No. C20355
EXP. 3-31-13
STATE OF CALIFORNIA

Project	SD0717
Date	07-27-12
Drawn By	PC
Checked By	JD
Scale	AS NOTED

Mitchell J. Architecture

D-502

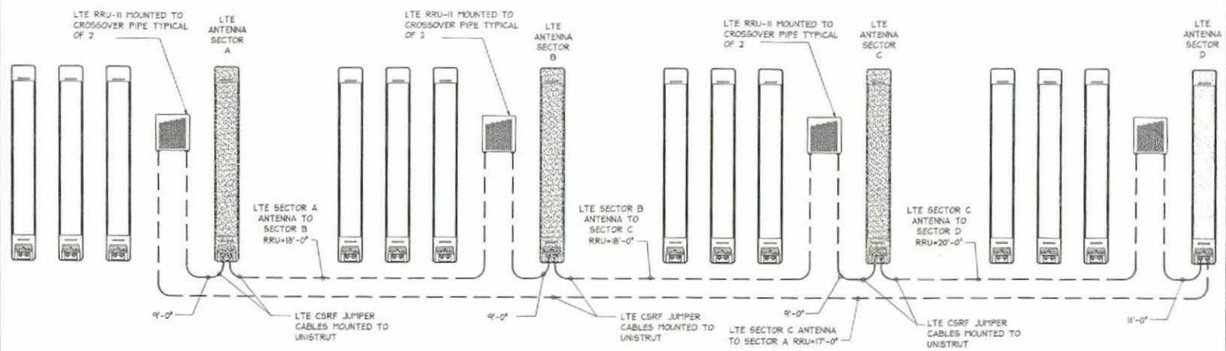

1 CSRF ELEVATION SCHEMATIC

SCALE: 3/8" = 1'-0"

FINAL ANTENNA SCHEDULE

SECTOR	AZIMUTH	DOWNTILT	MODEL NO.	ANTENNA TIP HEIGHT	RRU	NUMBER OF CABLES PER SECTOR	COAX CABLE	COAX LENGTH (+/- 5')	EQ. JUMPER LENGTH (+/- 5')	CSRF JUMPER LENGTH (+/- 3')	ANTENNA JUMPER LENGTH (+/-3')
A	1 0°	0°	ERICSSON AIR-21 (8'-0")	44'-0"	RRU-11	8	7/8"	60'	10'-0"	18'	9'-0"
	2 0°	0°	ERICSSON AIR-21 (8'-0")								
	3 0°	0°	ERICSSON AIR-21 (8'-0")								
	4 0°	0°	ERICSSON AIR-21 (8'-0")								
B	1 80°	0°	ERICSSON AIR-21 (8'-0")	44'-0"	RRU-11	8	7/8"	60'	10'-0"	18'	9'-0"
	2 80°	0°	ERICSSON AIR-21 (8'-0")								
	3 80°	0°	ERICSSON AIR-21 (8'-0")								
	4 80°	0°	ERICSSON AIR-21 (8'-0")								
C	1 140°	0°	ERICSSON AIR-21 (8'-0")	44'-0"	RRU-11	8	7/8"	60'	10'-0"	17'	8'-0"
	2 140°	0°	ERICSSON AIR-21 (8'-0")								
	3 140°	0°	ERICSSON AIR-21 (8'-0")								
	4 140°	0°	ERICSSON AIR-21 (8'-0")								
D	1 300°	0°	ERICSSON AIR-21 (8'-0")	44'-0"	RRU-11	8	7/8"	60'	10'-0"	20'	11'-0"
	2 300°	0°	ERICSSON AIR-21 (8'-0")								
	3 300°	0°	ERICSSON AIR-21 (8'-0")								
	4 300°	0°	ERICSSON AIR-21 (8'-0")								

NOTES:

LTE ANTENNAS RRU UNITS TO INCLUDE CROSS SECTOR REDUNDANCY FEATURE FOR BOTH RRU UNITS AND CSRF PLAN ON THIS SHEET.

FIELD VERIFY ALL CABLE LENGTHS PRIOR TO ORDERING CABLE.

VERIFY ROUTE AND LENGTH OF CABLE PRIOR TO CUTTING, ADJUST INDICATED ROUTE AS REQUIRED TO CLEAR EXISTING OBSTRUCTIONS AND MAINTAIN REQUIRED CLEARANCE OF EXISTING EQUIPMENT.

2 ANTENNA AND COAXIAL CABLE SCHEDULE

SCALE: NTS

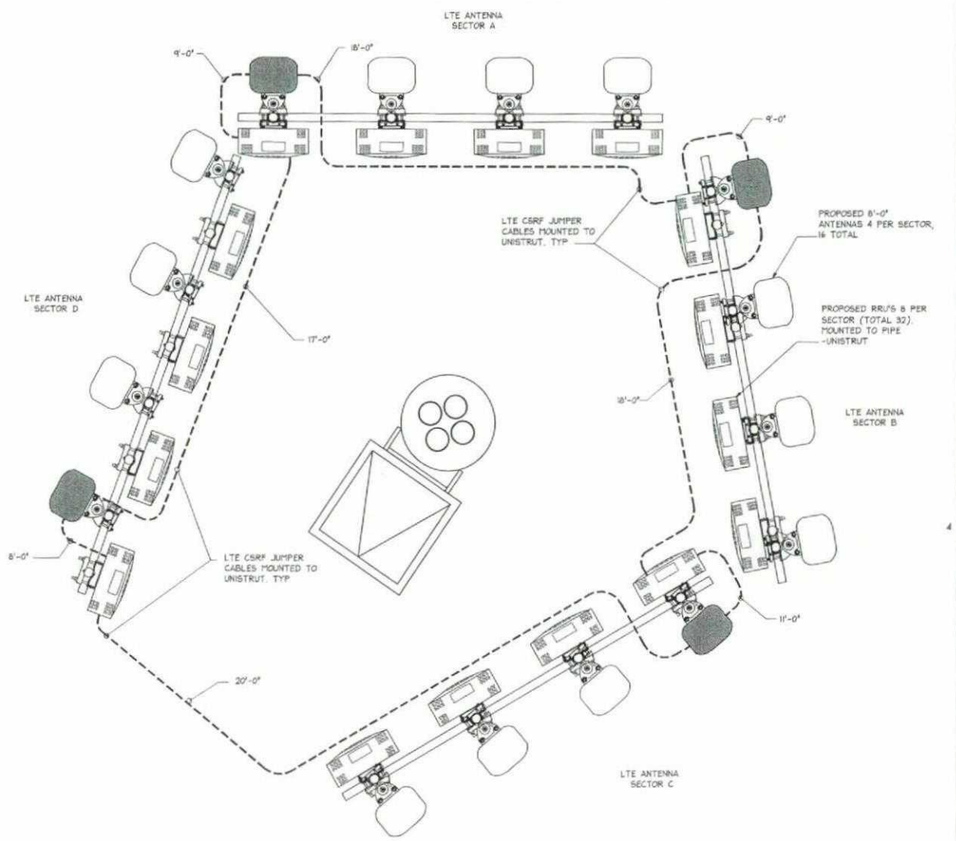

3 CSRF PLAN

SCALE: 3/4"=1'-0"

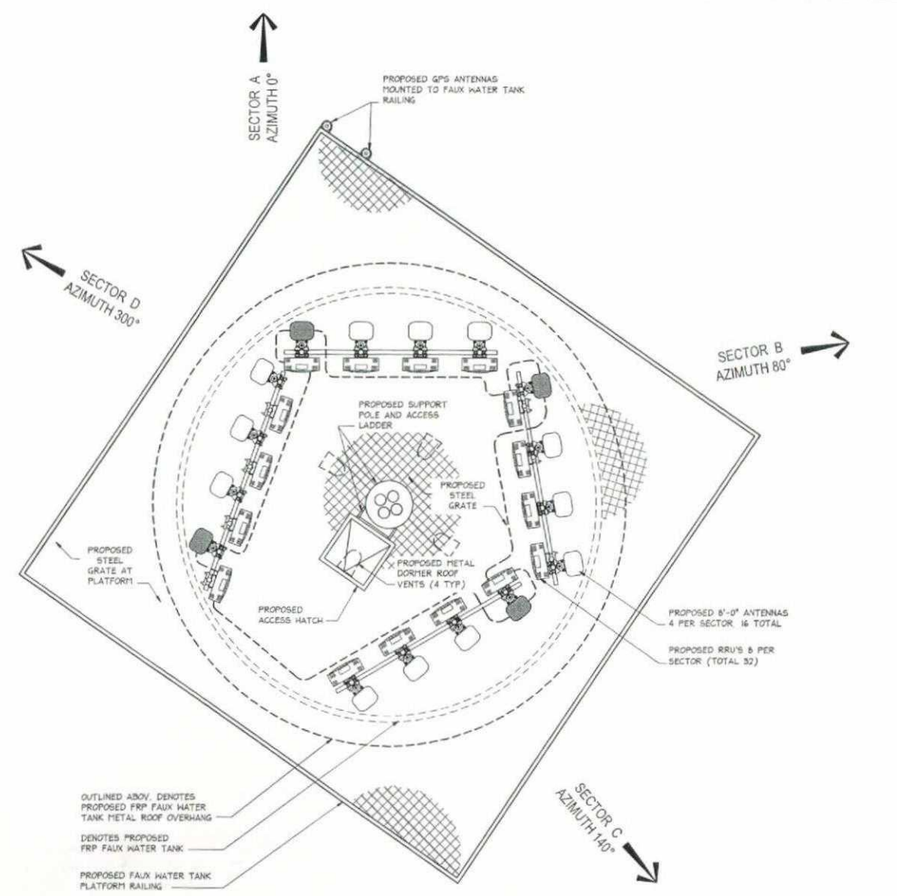

4 ANTENNA LAYOUT PLAN

SCALE: 3/8"=1'-0"

No.	Revision / Issue	Date
A	PRELIM ZD	07-27-12
B	90% ZD Review	08-10-12
C	100% ZD Review	08-22-12
D	ZD Client Comments	08-27-12
1	Planning Comments	12-17-12

CSRF LAYOUT AND COAX SCHEDULE

MITCHELL J. ARCHITECTURE, INC.
4683 Ronson Court, Suite N
San Diego, CA 92111
858.850.3140 (fax)
858.852.3130 (ph) / 858.850.3140 (fax)

These drawings & specifications are the property & copyright of Mitchell J. Architecture and may not be reused on other projects or extended to other locations or projects by any other parties except by agreement in writing by and with the owner of the property and the architect-of-record.

AT&T

OLD HWY 80
SD0717
41749 OLD HIGHWAY 80
BOULEVARD, CA. 91905

architecture

LICENSED ARCHITECT
MITCHELL J. CAMORA
No. C20355
REN. 3-31-13
STATE OF CALIFORNIA

Project	SD0717
Date	07-27-12
Drawn By	PC
Checked By	JD
Scale	AS NOTED

Mitchell J. Architecture

D-503

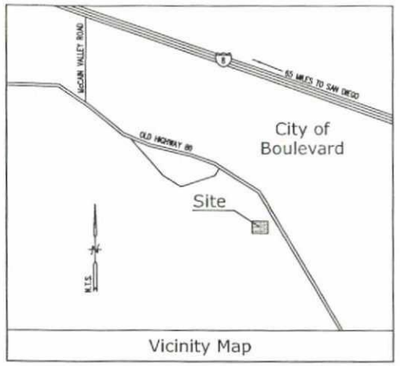

Vicinity Map

Title Report

PREPARED BY: LAWYERS TITLE INSURANCE CORPORATION
ORDER NO.: 11776507-10
DATED: NOVEMBER 9, 2009

Legal Description

ALL THAT CERTAIN REAL PROPERTY SITUATED IN THE COUNTY OF SAN DIEGO, STATE OF CALIFORNIA, DESCRIBED AS FOLLOWS:

THE NORTHWEST QUARTER OF THE SOUTHEAST QUARTER OF SECTION 27, TOWNSHIP 17 SOUTH, RANGE 7 EAST, SAN BERNARDINO BASE AND MERIDIAN, IN THE COUNTY OF SAN DIEGO, STATE OF CALIFORNIA, ACCORDING TO UNITED STATES GOVERNMENT SURVEY APPROVED SEPTEMBER 6, 1880.

EXCEPTING THEREFROM THAT PORTION THEREOF LYING NORTH AND EAST OF THE CENTER LINE OF THE CALIFORNIA STATE HIGHWAY AS THE SAME IS SHOWN ON MAP THEREOF FILED IN THE OFFICE OF THE COUNTY RECORDER OF SAID SAN DIEGO COUNT AS MISCELLANEOUS MAP NO. 118.

ALSO EXCEPTING THE SOUTH 200 FEET.

ALSO EXCEPTING THAT PORTION DESCRIBED AS FOLLOWS:

BEGINNING AT THE SOUTHWEST CORNER OF SAID NORTHWEST QUARTER OF THE SOUTHEAST QUARTER; THENCE NORTH ALONG THE WEST LINE OF SAID NORTHWEST QUARTER TO THE NORTH LINE OF THE SOUTH 200 FEET THEREOF; THENCE EAST ALONG SAID NORTH LINE AND PARALLEL WITH SOUTH LINE OF SAID NORTHWEST QUARTER 400 FEET TO THE TRUE POINT OF BEGINNING; THENCE NORTH 100 FEET; THENCE EAST TO THE CENTER LINE OF THE ABOVE DESCRIBED STATE HIGHWAY; THENCE SOUTHERLY ALONG SAID CENTER LINE TO SAID NORTH LINE OF THE SOUTH 200 FEET OF SAID NORTHWEST QUARTER; THENCE WEST ALONG SAID NORTH LINE TO THE TRUE POINT OF BEGINNING.

Assessor's Parcel No.

613-030-10-00

Easements

(2) AN EASEMENT FOR STATE HIGHWAY AND INCIDENTAL PURPOSES, RECORDED OCTOBER 28, 1931 IN BOOK 49, PAGE 77 OF OFFICIAL RECORDS. (PLOTTED HEREON)

(3) AN EASEMENT FOR ELECTRIC TRANSMISSION OR DISTRIBUTION LINE OR SYSTEM PURPOSES, RECORDED MARCH 11, 1971 AS INSTRUMENT NO. 46684 OF OFFICIAL RECORDS. (NOT PLOTTABLE – BLANKET IN NATURE)

Access Route

THAT PORTION OF THE NORTHWEST 1/4 OF THE SOUTHWEST 1/4 OF SECTION 27, TOWNSHIP 17 SOUTH, RANGE 7 EAST, SAN BERNARDINO BASE AND MERIDIAN, IN THE COUNTY OF SAN DIEGO, STATE OF CALIFORNIA, ACCORDING TO UNITED STATE GOVERNMENT SURVEY APPROVED SEPTEMBER 6, 1880, BEING A STRIP OF LAND, 12.00 FEET WIDE, LYING 6.00 FEET ON EACH SIDE OF THE FOLLOWING DESCRIBED CENTERLINE:

COMMENCING AT THE SOUTHWEST CORNER OF SAID NORTHWEST 1/4 OF THE SOUTHWEST 1/4; THENCE N00°43'50"E, ALONG THE WEST LINE OF SAID NORTHWEST 1/4 OF THE SOUTHWEST 1/4, 901.48 FEET TO A POINT ON THE SOUTHWESTERLY RIGHT OF WAY LINE OF THE CALIFORNIA STATE HIGHWAY AS THE SAME IS SHOWN ON MAP THEREOF FILED IN THE OFFICE OF THE COUNTY RECORDER OF SAID SAN DIEGO COUNTY AS MISCELLANEOUS MAP NO. 118, SAID POINT BEING ON A CURVE CONCAVE SOUTHWESTERLY HAVING A RADIUS OF 1950.00 FEET, A RADIAL LINE THROUGH SAID CURVE BEARS N29°51'19"E; THENCE SOUTHEASTERLY ALONG SAID CURVE THROUGH A CENTRAL ANGLE OF 21°13'22", AN ARC DISTANCE OF 722.30 FEET TO THE POINT OF BEGINNING; THENCE S51°04'42"W, 32.11 FEET; THENCE N89°01'41"W, 177.08 FEET; THENCE N82°10'08"W, 101.23 FEET; THENCE S80°29'56"W, 144.07 FEET; THENCE N81°42'25"W, 43.33 FEET TO A POINT HEREINAFTER REFERRED TO AS POINT "A" AND THE END OF SAID STRIP.

Lease Area

BEGINNING AT POINT "A" AS DESCRIBED ABOVE; THENCE S34°19'00"W, 15.33 FEET; THENCE N55°41'00"W, 21.33 FEET; THENCE N34°19'00"E, 21.33 FEET; THENCE S55°41'00"E, 21.33 FEET; THENCE S34°19'00"W, 6.00 FEET TO THE POINT OF BEGINNING.

CONTAINING 455.1 SQUARE FEET, MORE OR LESS.

Geographic Coordinates at Proposed Water Tower

1983 DATUM: LATITUDE 32° 39' 31.83"N LONGITUDE 116° 15' 04.56"W
ELEVATION = 3269.6 FEET ABOVE MEAN SEA LEVEL

CERTIFICATION:
THE LATITUDE AND LONGITUDE SHOWN ABOVE ARE ACCURATE TO WITHIN +/- 15 FEET HORIZONTALLY AND THAT THE ELEVATION3 SHOWN ABOVE ARE ACCURATE TO WITHIN +/- 3 FEET VERTICALLY. THE HORIZONTAL DATUM (GEOGRAPHIC COORDINATES) IS IN TERMS OF THE NORTH AMERICAN DATUM OF 1983 (NAD 83) AND IS EXPRESSED IN DEGREES (°), MINUTES (') AND SECONDS ("), TO THE NEAREST HUNDREDTH OF A SECOND. THE VERTICAL DATUM (ELEVATIONS) IS IN TERMS OF THE NORTH AMERICAN VERTICAL DATUM OF 1988 (NAVD 88) AND IS DETERMINED TO THE NEAREST TENTH OF A FOOT.

Basis of Bearings

THE STATE PLANE COORDINATE SYSTEM OF 1983 (NAD 83), CALIFORNIA ZONE 6.

Bench Mark

THE CALIFORNIA SPATIAL REFERENCE CENTER C.O.R.S "P066", ELEVATION =2808.89 FEET (NAVD 88).

Date of Survey

NOVEMBER 3, 2009

Overall Site Detail

SCALE: 1"=60'

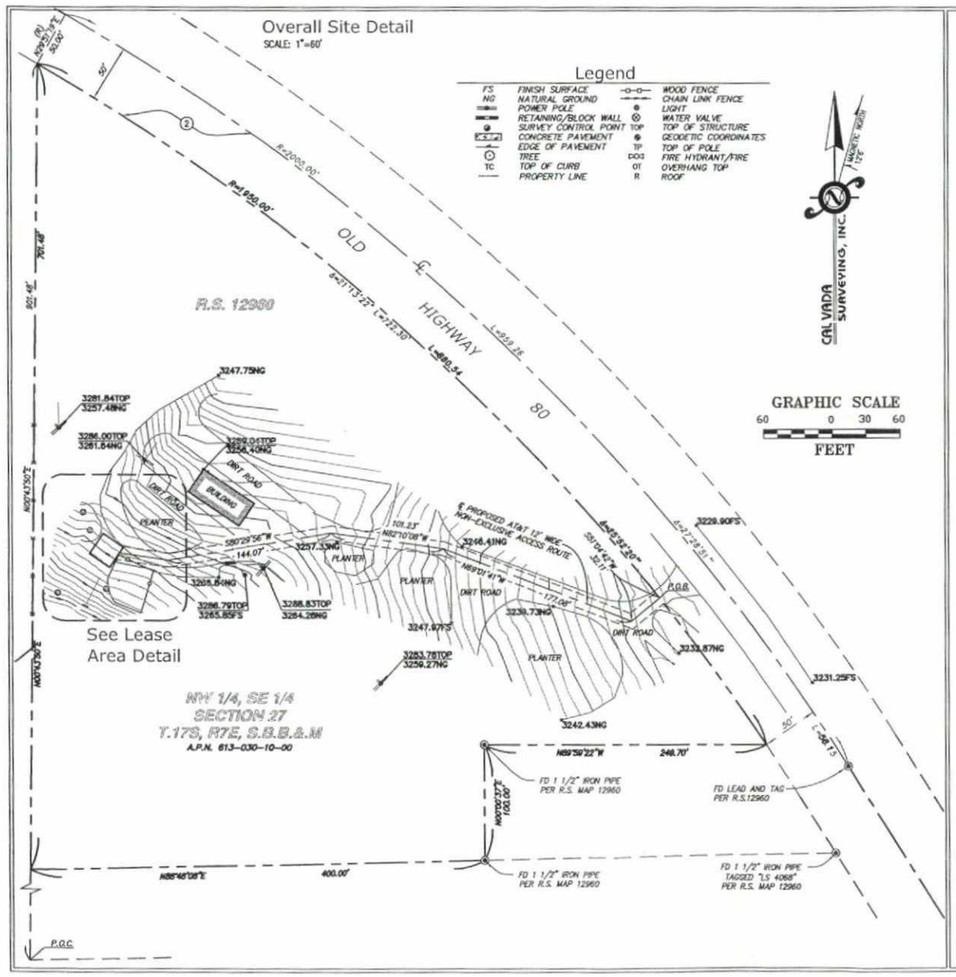

Lease Area Detail

SCALE: 1"=10'

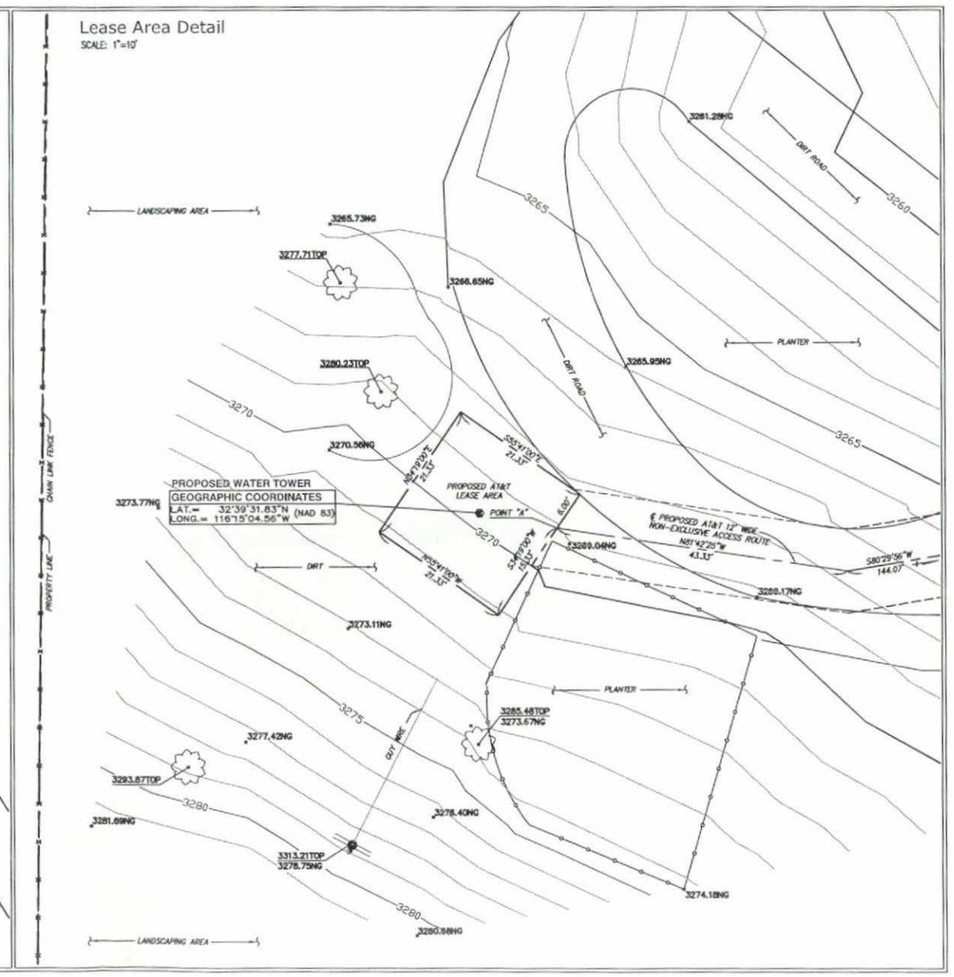

No.	Revision / Issue	Date
A	FKELIM ZD	07-27-12
B	90% ZD Review	08-10-12
C	100% ZD Review	08-22-12
D	ZD Client Comments	08-27-12

SURVEY PLAN

MITCHELL J. ARCHITECTURE, INC.
4683 Ronson Court, Suite N
San Diego, Ca. 92111
858.650.3140 (voice) 858.650.3140 (fax)

Reproduction or use of these plans and specifications in any form or by any means, electronic or mechanical, including photocopying, recording, or by any information storage and retrieval system, without prior written permission of Mitchell J. Architecture, is prohibited.

AT&T

OLD HWY 80
SD0717
41749 OLD HIGHWAY 80
BOULEVARD CA, 91905

Mitchell J. architecture

LICENSED ARCHITECT
MITCHELL J. CAMPAGNA
No. C20355
REN. 3-31-13
STATE OF CALIFORNIA

Project	SD0717
Date	07-27-12
Drawn By	PC
Checked By	JD
Scale	NO SCALE

Mitchell J. Architecture

C-1