CREW ENGINEERING
AND SURVEYING
5725 KEARNY VILLA ROAD, SUITE D
SAN DIEGO, CALIFORNIA 92123
(858) 571-0555

Preliminary Drainage Study

Hydrology and Hydraulic Calculations for Renteria T.P.M.

Introduction

The project is located on Skyline Truck Trail in Jamul. The owners, Alfonso and Elena Renteria, propose to subdivide the 59.2 acre Portion of Lots 1 and 2 of Section 4, T17S, R2E, SBM into 4 parcels of 12.53, 10.00, 14.01 and 11.04 acres. The 11.60 acre portion left behind will be labeled "Designated Remainder Parcel". The site is currently vacant. The central portion of the site drains northerly via several well defined natural drainage courses. Offsite runoff enters the site at the upstream end of the westerly drainage course via an existing 24-inch CMP pipe culvert within Skyline Truck Trail. The northeasterly portion of the site slopes moderately, and sheet flows to the northeast. The southeasterly portion of the site slopes moderately to the south, and drains to an existing 24-inch CMP pipe culvert within Skyline Truck Trail. The westerly portion of the site slopes moderately and surface drains to the to the west.

This study is to estimate the developed runoff from and across the site and the surface drainage features that have been proposed to safely convey runoff and return it to sheet flow. The runoff exiting the site should remain the same following the development of this property.

SDC PDS RCVD 02-19-13
TPM21107

ENGINEER OF WORK:
CREW ENGINEERING AND SURVEYING
5725 KEARNY VILLA ROAD, SUITE D
SAN DIEGO, CALIFORNIA 92123
(619) 571-0555

Ronald C Ashman 11/07

RONALD C. ASHMAN, R.C.E. 34300
EXPIRES SEPTEMBER 30, 2009

REGISTERED PROFESSIONAL ENGINEER
RONALD CREW ASHMAN
No. 34300
CIVIL
STATE OF CALIFORNIA

Contents

	Page
Introduction	1
Contents	2
Methodology	2
Basin Calculations	3
Drainage Details	4-5
Runoff Coefficients	6
Initial Time of Concentration Chart	7
Rainfall Maps	8-9
Intensity Duration Design Chart	10
Hydrologic Soil Group Map	11
200 Scale Drainage Map	12

Methodology

The limits of the drainage basins were determined using county topographic maps at 1"=200' scale. A site inspection and survey was conducted to verify the drainage basin and flow patterns.

The Rational Method (Q=CIA) was used to calculate the runoff.

Intensity based on 100 year frequency storm.

Equation for determining the time of concentration (Tc) for natural watersheds:

$$Tc = [11.9xL^3/H]^{0.385}+10 \text{ min.}$$

Rational Method intensity calculation:
100 Year Frequency: P6 = 3.5" P24 = 7.9" P6 / P24 = 44%;
so adjusted P6 = P24 x 45% = 3.6"
$D = Tc$, $I = 7.44 \times P6 \times D^{-0.645}$

Drainage Basin Parameters

Basin	Length(mi)	Height (ft)	Tc (min)	C	I (in/min)	Area (ac)	Q100(cu.ft./s)
A	0.09	89.00	11.71	0.32	5.48	2.85	5.00
B	0.09	84.00	11.75	0.32	5.47	2.71	4.74
C	0.08	67.00	11.67	0.36	5.49	1.45	2.87
D	0.27	141.00	15.11	0.34	4.65	24.66	38.99
E	0.04	10.00	11.56	0.36	5.52	0.45	0.89
F	0.05	20.00	11.54	0.36	5.53	1.25	2.49
G	0.13	98.00	12.52	0.36	5.25	8.78	16.59
H	0.16	165.00	12.63	0.32	5.22	7.02	11.73
I	0.09	134.00	11.46	0.33	5.56	3.59	6.59
J	0.33	176.00	15.90	0.33	4.50	14.77	21.93

Pre-Development vs. Post-Development

	Pre-development	Post-Development
Impervious Area	0.52 acres	1.38 acres
% Impervious	0.8%	2.0%
Runoff Developed Onsite	111.8 cfs	115.1 cfs

Change in Developed Runoff Due to Construction = 3.3 cfs

Weighted Runoff Coefficient Calculation

$$C = 0.90 \times (\%\ \text{Impervious}) + C_p \times (1 - \%\text{Impervious})$$

Pre-Development

$$C = 0.90 \times (0.8\%) + 0.34 \times (1 - 0.8\%)$$

$$C = 0.34$$

Therefore Q= 111.8 cfs

Post-Development

$$C = 0.90 \times (2.0\%) + 0.34 \times (1 - 2.0\%)$$

$$C = 0.35$$

Therefore Q= 115.1 cfs

Conclusion

The estimated developed runoff from the site prior to construction is 111.8 cfs and post-construction runoff is approximately 115.1 cfs. This increase is insignificant and should not result in any substantial erosion. Energy dissipation devices should be proposed, including rock filters around house pads, and grass lined swales and rip rap sumps at the exit point of the pads and where runoff exits the driveways (see attached details). The drainage pattern of the site should not significantly change due to the construction of this project.

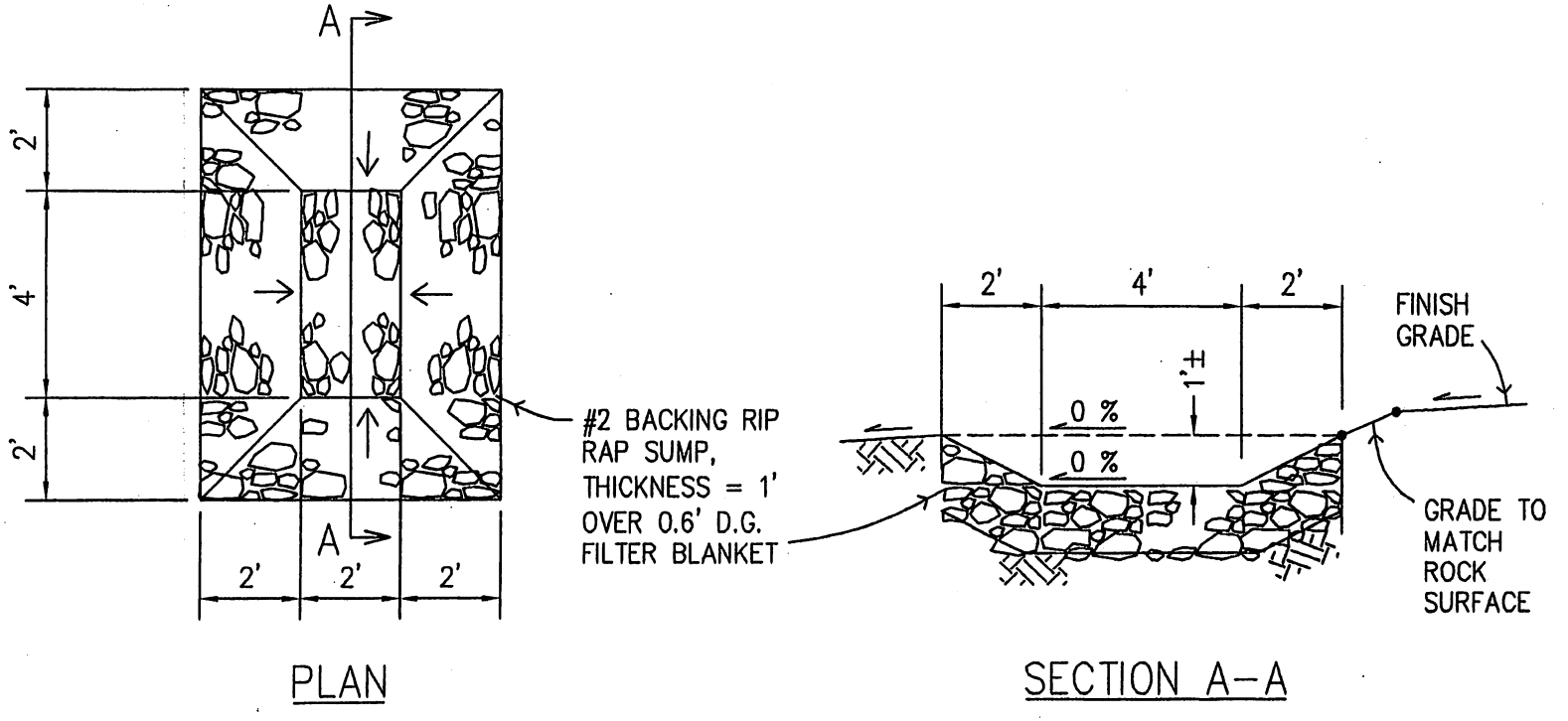

RIP RAP SUMP AT PAD OUTLET

NOT TO SCALE

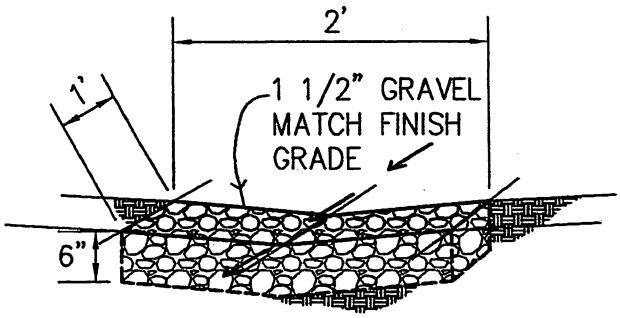

NOTE:
INSTALL GRAVEL DESILTING PADS IN EARTH SWALE AT 50' MAX. O.C.

DETAIL OF GRAVEL DESILTING PAD

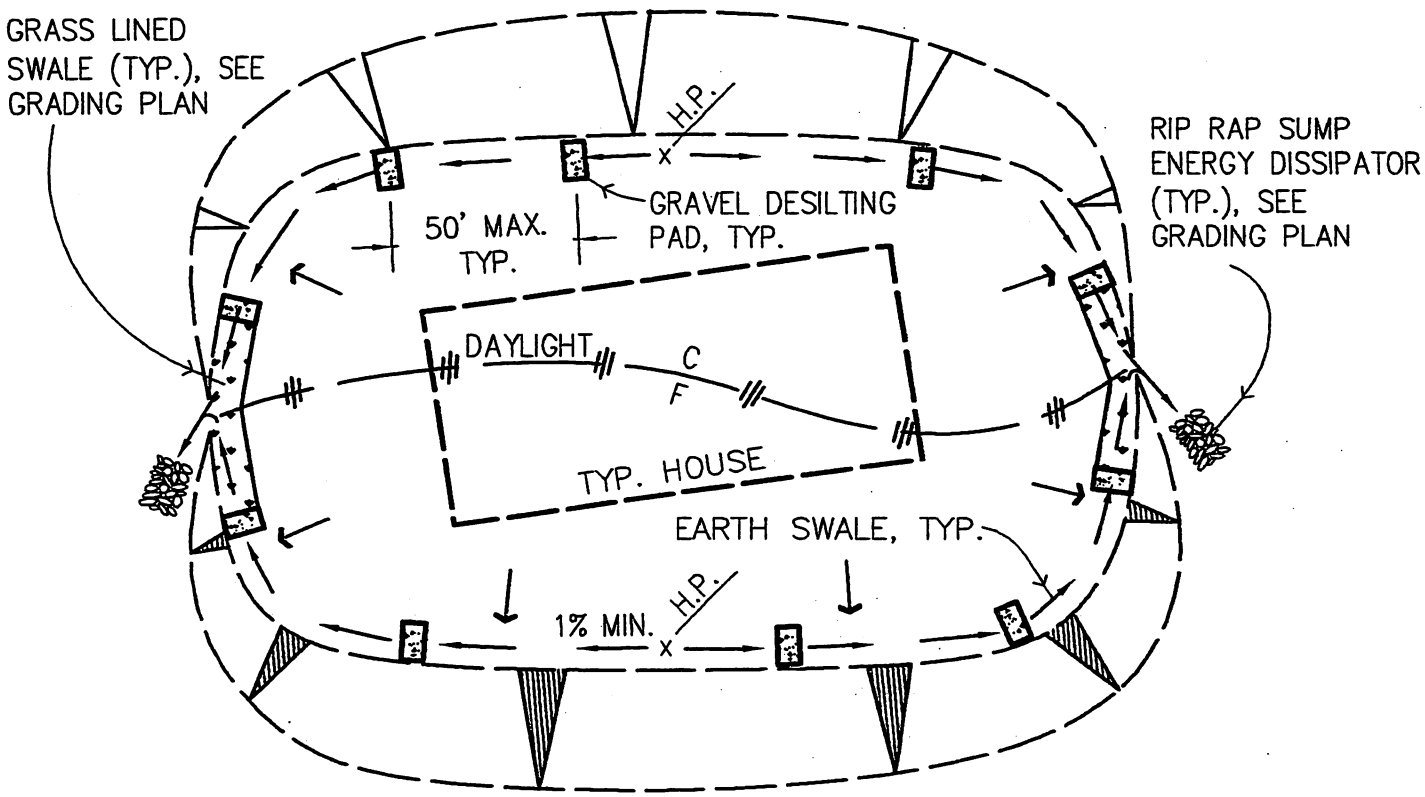

NOTE:
NO ROOF DRAIN PIPING OFF PAD. ALLOW WATER TO OVERLAND FLOW FROM DOWNSPOUT/SPLASHBLOCK THROUGH YARD.

TYPICAL PAD DRAINAGE DETAIL

NO SCALE

Table 3-1
RUNOFF COEFFICIENTS FOR URBAN AREAS

Land Use		Runoff Coefficient "C"				
			Soil Type			
NRCS Elements	County Elements	% IMPER.	A	B	C	D
Undisturbed Natural Terrain (Natural)	Permanent Open Space	0*	0.20	0.25	0.30	0.35
Low Density Residential (LDR)	Residential, 1.0 DU/A or less	10	0.27	0.32	0.36	0.41
Low Density Residential (LDR)	Residential, 2.0 DU/A or less	20	0.34	0.38	0.42	0.46
Low Density Residential (LDR)	Residential, 2.9 DU/A or less	25	0.38	0.41	0.45	0.49
Medium Density Residential (MDR)	Residential, 4.3 DU/A or less	30	0.41	0.45	0.48	0.52
Medium Density Residential (MDR)	Residential, 7.3 DU/A or less	40	0.48	0.51	0.54	0.57
Medium Density Residential (MDR)	Residential, 10.9 DU/A or less	45	0.52	0.54	0.57	0.60
Medium Density Residential (MDR)	Residential, 14.5 DU/A or less	50	0.55	0.58	0.60	0.63
High Density Residential (HDR)	Residential, 24.0 DU/A or less	65	0.66	0.67	0.69	0.71
High Density Residential (HDR)	Residential, 43.0 DU/A or less	80	0.76	0.77	0.78	0.79
Commercial/Industrial (N. Com)	Neighborhood Commercial	80	0.76	0.77	0.78	0.79
Commercial/Industrial (G. Com)	General Commercial	85	0.80	0.80	0.81	0.82
Commercial/Industrial (O.P. Com)	Office Professional/Commercial	90	0.83	0.84	0.84	0.85
Commercial/Industrial (Limited I.)	Limited Industrial	90	0.83	0.84	0.84	0.85
Commercial/Industrial (General I.)	General Industrial	95	0.87	0.87	0.87	0.87

*The values associated with 0% impervious may be used for direct calculation of the runoff coefficient as described in Section 3.1.2 (representing the pervious runoff coefficient, Cp, for the soil type), or for areas that will remain undisturbed in perpetuity. Justification must be given that the area will remain natural forever (e.g., the area is located in Cleveland National Forest).
DU/A = dwelling units per acre
NRCS = National Resources Conservation Service

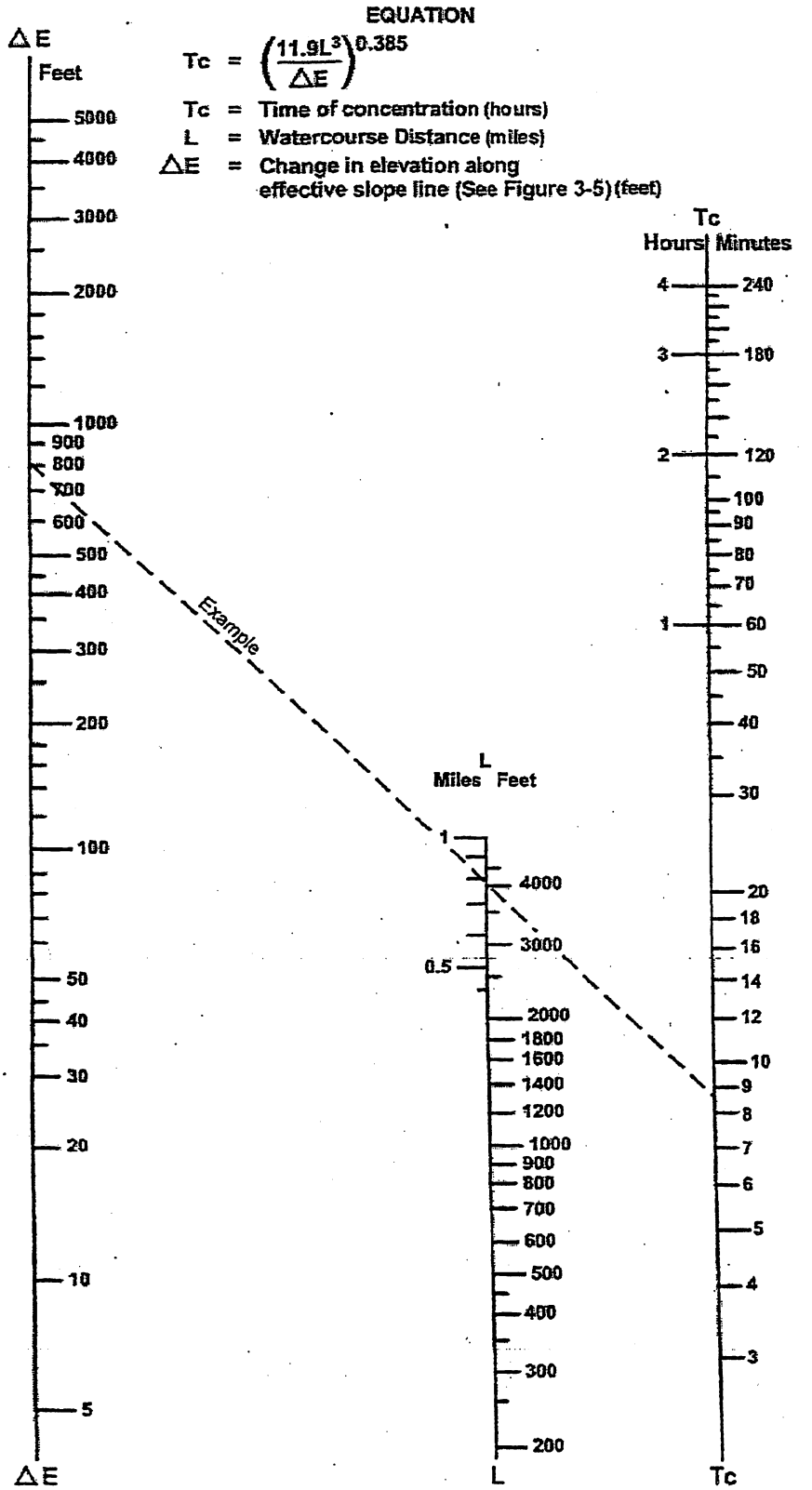

SOURCE: California Division of Highways (1941) and Kirpich (1940)

FIGURE

Nomograph for Determination of
Time of Concentration (Tc) or Travel Time (Tt) for Natural Watersheds

3-4

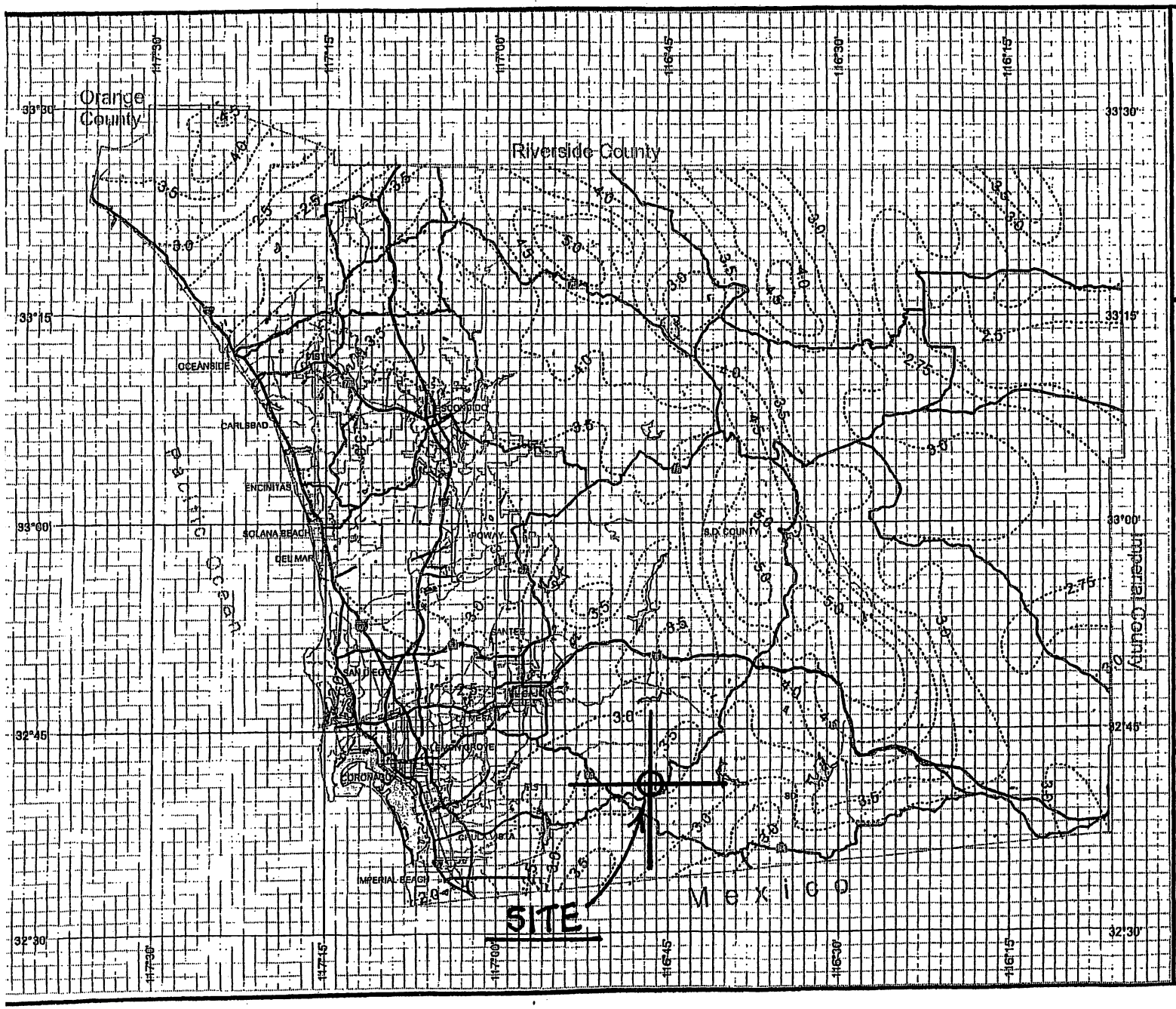

County of San Diego Hydrology Manual

Rainfall Isopluvials

100 Year Rainfall Event - 6 Hours

Isopluvial (inches)

DPW GIS
Department of Public Works Geographic Information System

SanGIS
We Have San Diego Covered!

N W E S

THIS MAP IS PROVIDED WITHOUT WARRANTY OF ANY KIND, EITHER EXPRESS OR IMPLIED, INCLUDING, BUT NOT LIMITED TO, THE IMPLIED WARRANTIES OF MERCHANTABILITY AND FITNESS FOR A PARTICULAR PURPOSE. Copyright SanGIS. All Rights Reserved.

This products may contain information from the SANDAG Regional Information System which cannot be reproduced without the written permission of SANDAG.

This product may contain information which has been reproduced with permission granted by Thomas Brothers Maps.

3 0 3 Miles

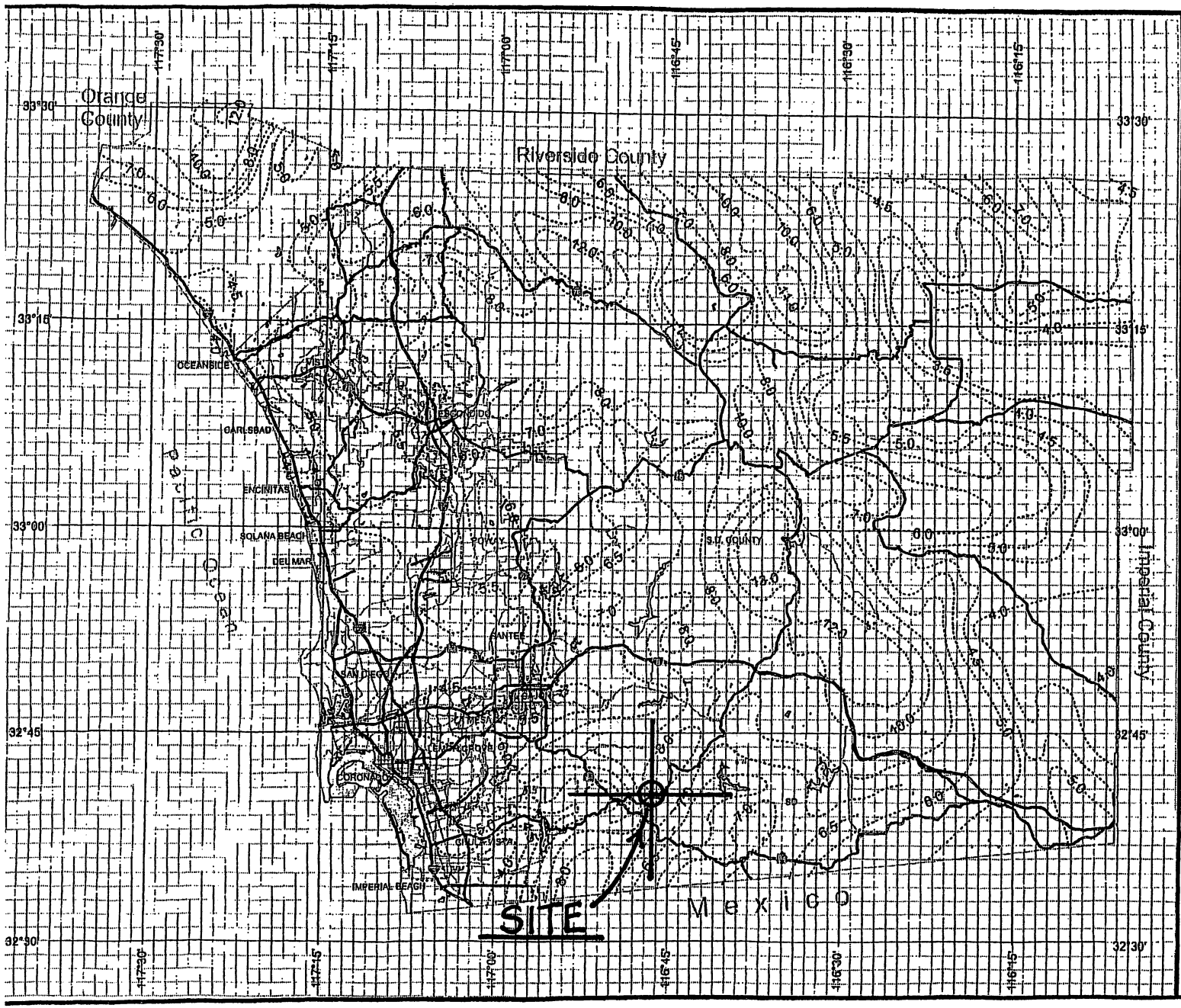

County of San Diego Hydrology Manual

Rainfall Isopluvials

100 Year Rainfall Event - 24 Hours

-------- Isopluvial (inches)

DPW GIS
Department of Public Works
Geographic Services Division

SanGIS
We Have San Diego Covered!

N
W E
S

3 0 3 Miles

THIS MAP IS PROVIDED WITHOUT WARRANTY OF ANY KIND, EITHER EXPRESS OR IMPLIED, INCLUDING, BUT NOT LIMITED TO, THE IMPLIED WARRANTIES OF MERCHANTABILITY AND FITNESS FOR A PARTICULAR PURPOSE. Copyright SanGIS. All Rights Reserved.

This products may contain information from the SANDAG Regional Information System which cannot be reproduced without the written permission of SANDAG.

This product may contain information which has been reproduced with permission granted by Thomas Brothers Maps.

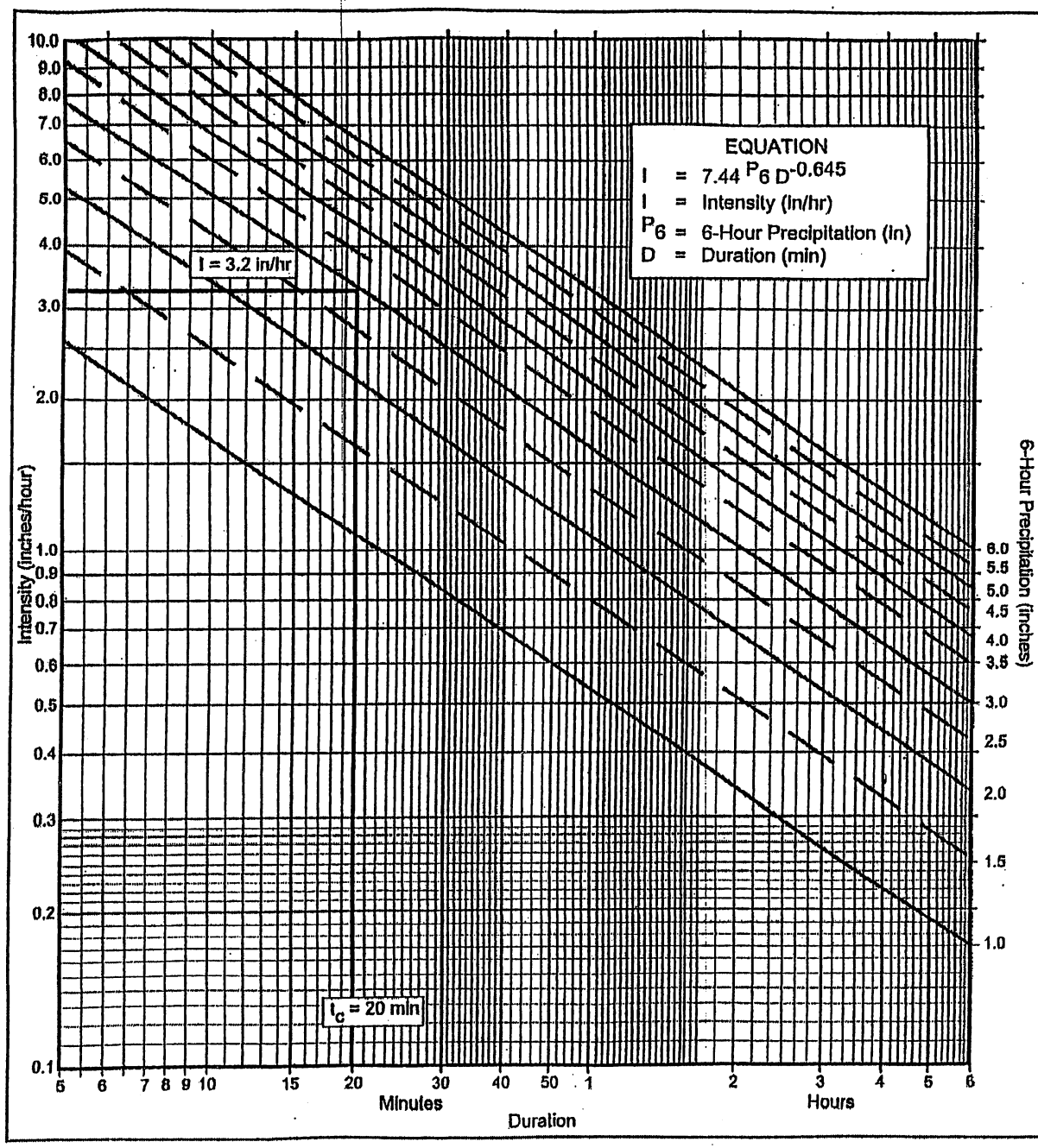

Directions for Application:

(1) From precipitation maps determine 6 hr and 24 hr amounts for the selected frequency. These maps are included in the County Hydrology Manual (10, 50, and 100 yr maps included in the Design and Procedure Manual).

(2) Adjust 6 hr precipitation (if necessary) so that it is within the range of 45% to 65% of the 24 hr precipitation (not applicaple to Desert).

(3) Plot 6 hr precipitation on the right side of the chart.

(4) Draw a line through the point parallel to the plotted lines.

(5) This line is the intensity-duration curve for the location being analyzed.

Application Form:

(a) Selected frequency 100 year

(b) P_6 = 3.5 in., P_{24} = 7.9 , $\frac{P_6}{P_{24}}$ = 44 %(2)

(c) Adjusted P_6(2) = 3.6 in.

(d) t_x = _____ min. SEE CHART, PAGE 3

(e) I = _____ n./hr. SEE CHART, PAGE 3

Note: This chart replaces the Intensity-Duration-Frequency curves used since 1965.

P6	1	1.5	2	2.5	3	3.5	4	4.5	5	5.5	6
Duration	I	I	I	I	I	I	I	I	I	I	I
5	2.63	3.95	5.27	6.59	7.90	9.22	10.54	11.86	13.17	14.49	15.81
7	2.12	3.18	4.24	5.30	6.36	7.42	8.48	9.54	10.60	11.66	12.72
10	1.68	2.53	3.37	4.21	5.05	5.90	6.74	7.58	8.42	9.27	10.11
15	1.30	1.95	2.59	3.24	3.89	4.54	5.19	5.84	6.49	7.13	7.78
20	1.08	1.62	2.15	2.69	3.23	3.77	4.31	4.85	5.39	5.93	6.46
25	0.93	1.40	1.87	2.33	2.80	3.27	3.73	4.20	4.67	5.13	5.60
30	0.83	1.24	1.66	2.07	2.49	2.90	3.32	3.73	4.15	4.56	4.98
40	0.69	1.03	1.38	1.72	2.07	2.41	2.76	3.10	3.45	3.79	4.13
50	0.60	0.90	1.19	1.49	1.79	2.09	2.39	2.69	2.98	3.28	3.58
60	0.53	0.80	1.06	1.33	1.59	1.86	2.12	2.39	2.65	2.92	3.18
90	0.41	0.61	0.82	1.02	1.23	1.43	1.63	1.84	2.04	2.25	2.45
120	0.34	0.51	0.68	0.85	1.02	1.19	1.36	1.53	1.70	1.87	2.04
150	0.29	0.44	0.59	0.73	0.88	1.03	1.18	1.32	1.47	1.62	1.76
180	0.26	0.39	0.52	0.65	0.78	0.91	1.04	1.18	1.31	1.44	1.57
240	0.22	0.33	0.43	0.54	0.65	0.76	0.87	0.98	1.08	1.19	1.30
300	0.19	0.28	0.38	0.47	0.56	0.66	0.75	0.85	0.94	1.03	1.13
360	0.17	0.25	0.33	0.42	0.50	0.58	0.67	0.75	0.84	0.92	1.00

Intensity-Duration Design Chart - Example

FIGURE 3-2

a

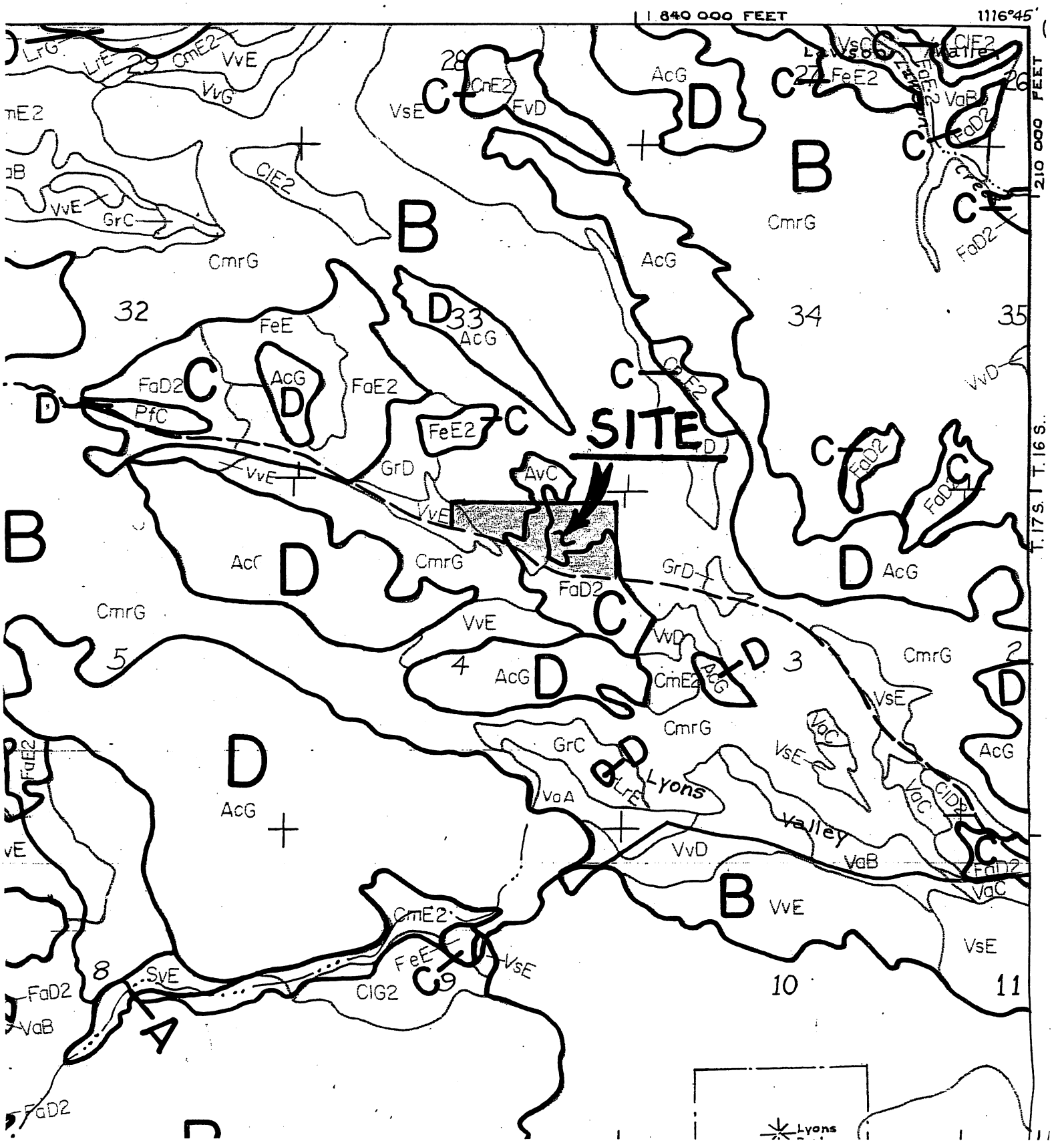

1 840 000 FEET
1116°45'
210 000 FEET
T. 16 S.
T. 17 S.
SITE
Lyons Valley
Lawson Valley
Lyons
28
27
26
29
32
33
34
35
5
4
3
2
8
9
10
11
A
B
C
D
LrG
LrE
CmE2
VvE
VvG
CnE2
FvD
VsE
AcG
FeE2
VaB
FaD2
ClE2
GrC
CmrG
FeE
FaE2
PfC
GrD
AvC
VvD
VaC
VaA
LrE
ClD2
SvE
ClG2

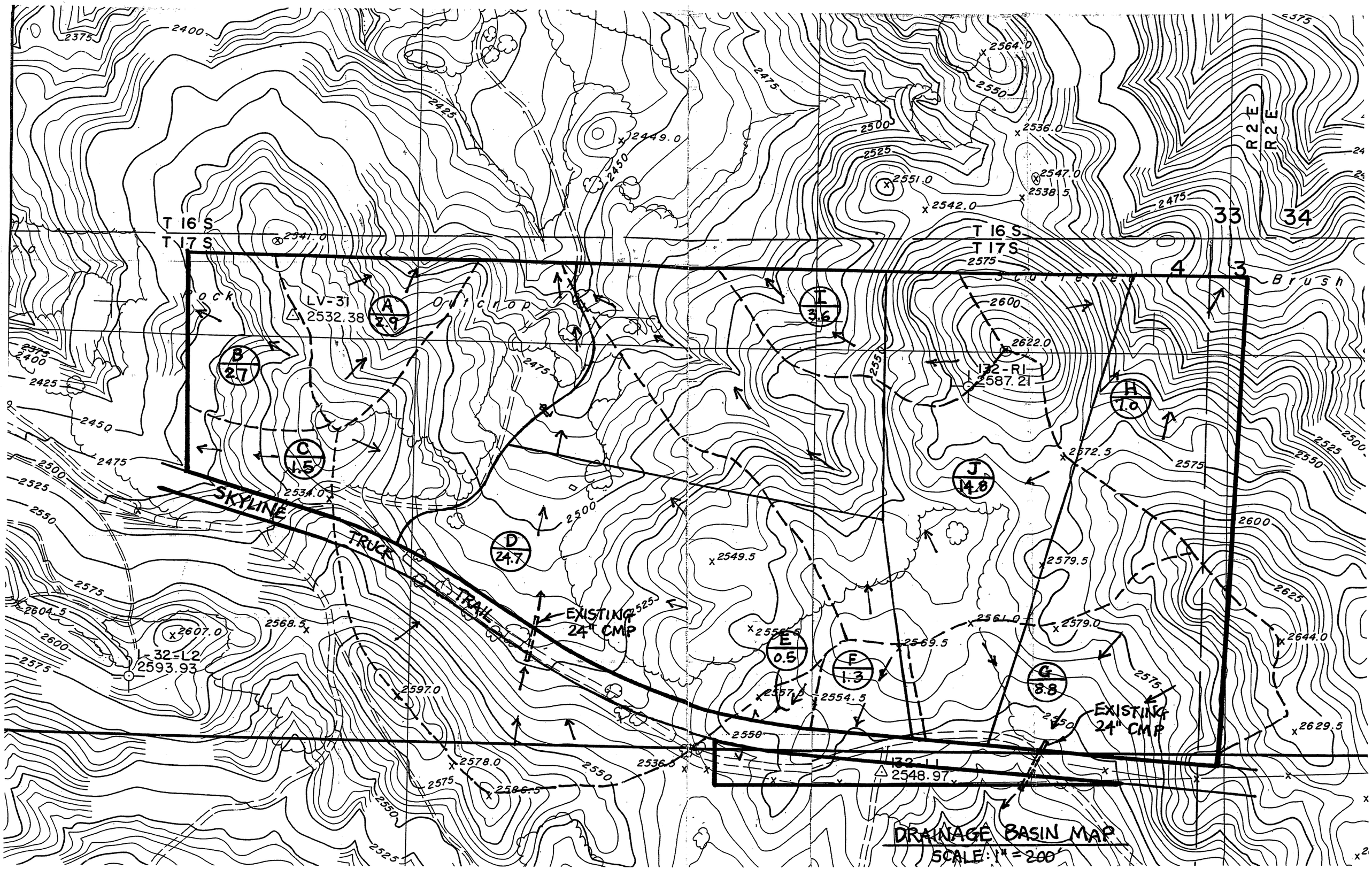

DRAINAGE BASIN MAP
SCALE: 1" = 200'