County of San Diego
Department of Planning & Land Use
BUILDING DIVISION

ACCESSIBILITY CORRECTION LIST Multifamily Housing	**4A**
Ramps	

RECORD ID:	OWNER ON APPLICATION:

GENERAL REQUIREMENTS

1. An accessible route with running slope exceeding 5% requires an accessible ramp.
Exception: Curb ramps per accessibility correction list 3A

CBC 1111A.2

2. Provide complete dimensions and coordinated detailing for each ramp.

CBC 1114A and CBC 1122A

RAMP RUNS

3. Dimension minimum 48-inch clear width at each ramp run with no protrusion by handrails, curbs, or guide rails.
Exception: Minimum 36-inch clear width allowed at ramp runs serving covered multifamily dwellings with occupant load of 10 or fewer
Exception: Handrails – but not curbs or wheel guides – may project into the required clear width maximum 3-1/2 inches on each side

CBC 1114A.1 and 1122A.1

4. Specify running slope for each ramp run.

CBC 1114A.2 and CBC 1122A.2

5. Specify and dimension the following to verify slope(s) indicated per item 4 do not exceed 8.3% running slope for each ramp run:
Exception: Alternate running slopes allowed at ramps serving dwelling unit decks, patios, or balconies per accessibility correction list 15A
- ❑ Elevations at top and bottom ramp landings
- ❑ Length of ramp run

CBC 1114A.2 and CBC 1122A.2

6. Specify maximum 2.1% cross slope for each ramp run and landing.

CBC 1114A.2.1 and CBC 1122A.2.1

SURFACE MATERIAL

7. Specify continuous common surface material complying with the following for each ramp run and landing:
- ❑ Surface with slope less than 6% gradient shall have slip resistance equivalent to medium salted finish
- ❑ Surface with slope 6% gradient or greater shall be slip-resistant

CBC 1113A.1.2

8. Specify means of preventing accumulation of water on exterior ramp runs, approaches, and landings.

CBC 1114A.3

THIS DOCUMENT IS FOR PLAN REVIEW ONLY.
CORRECTION LIST ITEMS AND FIGURES MAY NOT BE REPRODUCED OR COPIED ON PLANS.
IF CONFLICTS EXIST BETWEEN CODE TEXT AND FIGURES, THE CODE TEXT SHALL GOVERN.

LANDING DIMENSIONS AND CONFIGURATION

9. Dimension the following level ramp landings per CBC Figure 11A-6C(a), CBC Figure 11A-6C(b), or CBC Figure 11A-6D(a):

- ❑ Top landing:
  - o Minimum 60-inch length
  - o Minimum 60-inch width
- ❑ Bottom landing:
  - o Minimum 72-inch length
  - o Minimum width equivalent to ramp run width
- ❑ Intermediate landing(s) required at changes in direction or where elevations specified per item 5 indicate vertical rise exceeds 30 inches:
  - o Minimum 72-inch length in the direction of downward travel from the upper ramp run at change of direction in excess of 30 degrees
  - o Minimum 60-inch length for other intermediate landings
  - o Minimum 60-inch width at any change of direction
  - o Minimum width equivalent to ramp run width for other intermediate landings
  - o Intermediate landings placed at intervals such that no ramp run exceeds 30-inch vertical rise

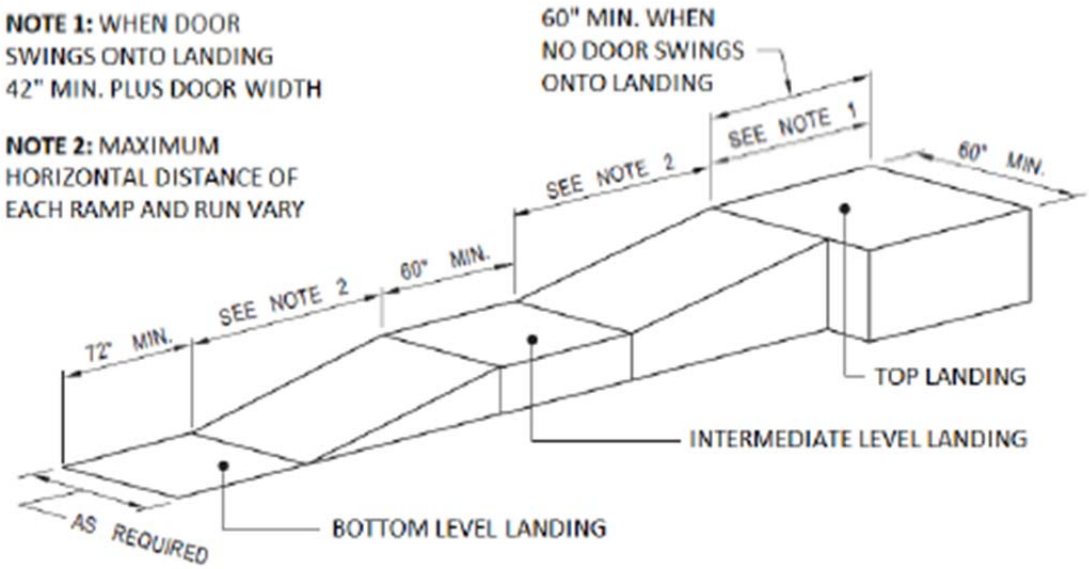

(a) STRAIGHT RAMP RUN

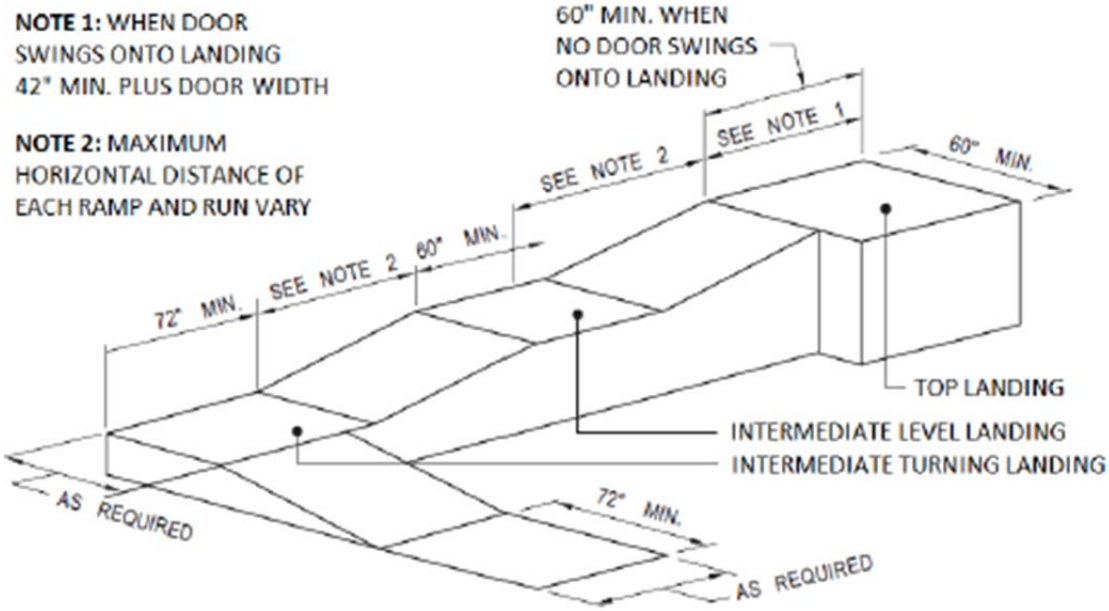

(b) RAMP WITH TURNING LANDING

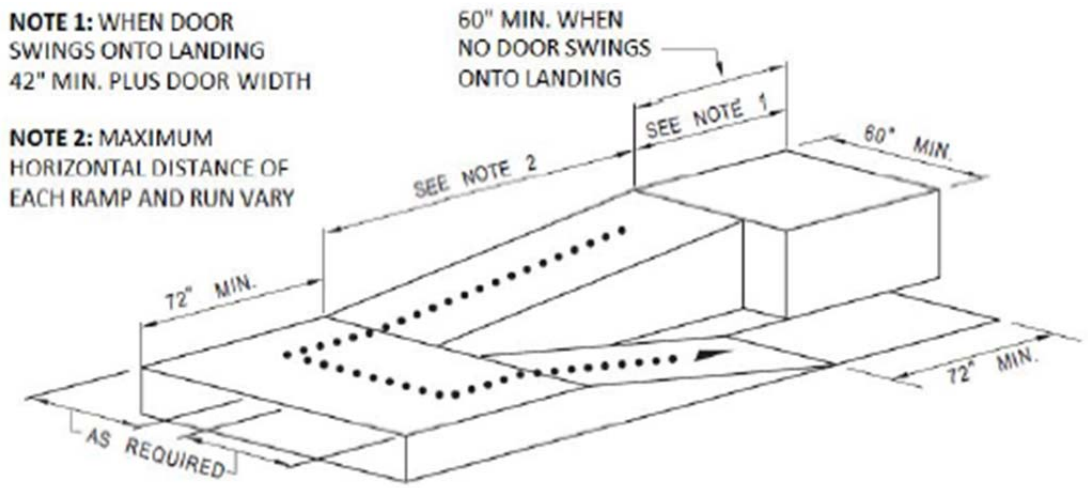

(a) RAMP WITH INTERMEDIATE SWITCH BACK LANDING

FIGURE 11A-6D
RAMP LANDING

CBC 1114A.4.2 and CBC 1122A.3.2

10. Dimension landings with associated door/gate swings per CBC Figure 11A-6D(b):
- ❑ Doors/gates in any position shall not reduce the minimum landing dimension to less than 42 inches
- ❑ Doors/gates in fully open position shall not reduce the required landing width by more than 3 inches when fully open
- ❑ Landing extending 24 inches past strike edge of doors or gates at exterior ramps
- ❑ Landing extending 18 inches past strike edge of doors or gates at interior ramps

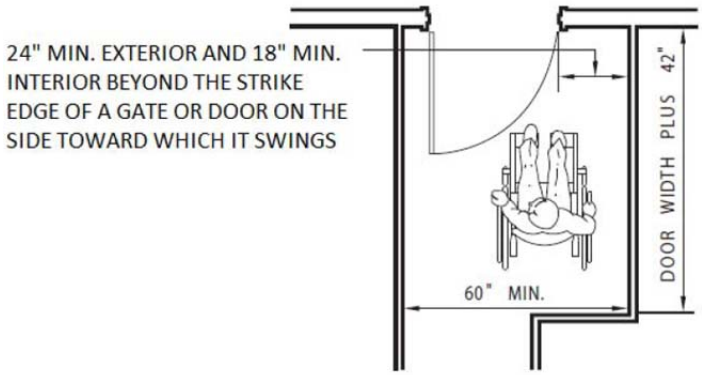

(b) RAMP LANDING AT DOORWAY

FIGURE 11A-6D
RAMP LANDING AND DOORWAY

CBC 1114A.4.4, CBC 1114A.4.5, CBC 1122A.3.4, and CBC 1122A.3.5

EDGE PROTECTION

11. At each side of ramp runs and landings not bounded by a wall, detail one of the following:
- ❑ Minimum 4-inch-high continuous guide curb per CBC Figure 11A-5A
  Exception: Minimum 2-inch-high continuous guide curb acceptable if ramp does not serve as means of egress
- ❑ Minimum 2-inch-high continuous barrier preventing the passage of 4-inch-diameter sphere per CBC Figure 11A-5A
  Exception: Edge protection not required on sides of ramp landings serving adjoining ramp run or stairway
  Exception: Edge protection not required on sides of ramps not required to have handrails and having flared sides with maximum 10% slope
  Exception: Edge protection not required on sides of ramp landings with adjacent vertical drop-off not exceeding 1/2 inch within 10 inches horizontally

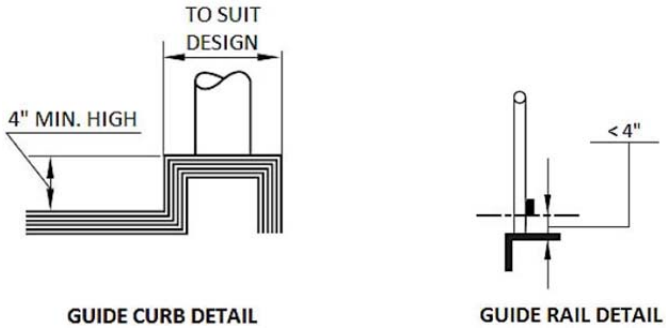

FIGURE 11A-5A
RAMPS

CBC 1010.10 and CBC 1114A.7

12. At ramp runs or landings located more than 30 inches above adjacent floor or grade within 36 inches horizontally of open side, detail continuous guard minimum 42-inches above ramp surface with openings not allowing passage of 4-inch-diameter sphere.
Exception: Openings not allowing passage of 4 3/8-inch-diameter sphere allowed in portions of guard 36 inches to 42 inches high

CBC 1013.2, CBC 1013.3, and CBC 1013.4

HANDRAILS AND EXTENSIONS

13. Provide continuous handrail on each side of each ramp run for full length of run.
Exception: Handrail acceptable on only one side of ramp run serving an individual dwelling unit provided ramp open on any side includes handrail on that side
Exception: Handrails not required at ramp runs with less than 6-inch rise or 72-inch length serving exterior door landings

CBC 1114A.6.1 and CBC 1122A.5.1

14. Provide continuous inner handrails between ramp runs at dogleg or switchback ramps.

CBC 1114A.6.2.2

15. Dimension top of handrail gripping surface at minimum 34 inches and maximum 38 inches above ramp surface per CBC Figure 11A-5A.

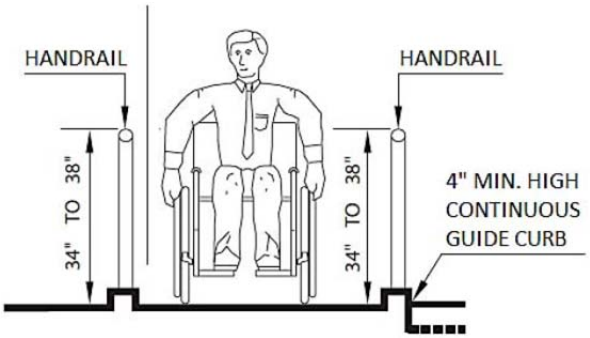

FIGURE 11A-5A
RAMPS

CBC 1114A.6.2.1 and CBC 1122A.5.2.1

16. Detail extensions for each handrail complying with the following per CBC Figure 11A-5A:
- ❑ Extending minimum 12 inches horizontally beyond the top and bottom of each ramp run
- ❑ Extending in direction of each ramp run
- ❑ Ends returning smoothly to floor, wall, or post

FIGURE 11A-5A
RAMPS

CBC 1012.6, CBC 1114A.6.2.3, and CBC 1122A.5.2.3

17. Detail handrail gripping surfaces complying with the following:

- ❑ If cross section is circular, minimum 1-1/4-inch and maximum 2-inch outside diameter per CBC Figure 11A-6B(a)
- ❑ If cross section is non-circular, minimum 4-inch and maximum 6-1/4-inch perimeter and maximum 2-1/4-inch cross-section dimension per CBC Figure 11A-6B(b) or CBC Figure 11A-6B(d)
- ❑ Continuous along length of handrail
- ❑ Unobstructed on tops or sides
- ❑ Not obstructed on bottoms more than 20% of handrail length
- ❑ Any horizontal projections minimum 1-1/2 inches below handrail gripping surface
- ❑ Rounded edges
- ❑ No sharp or abrasive elements or adjacent surfaces
- ❑ No handrail rotation within fittings

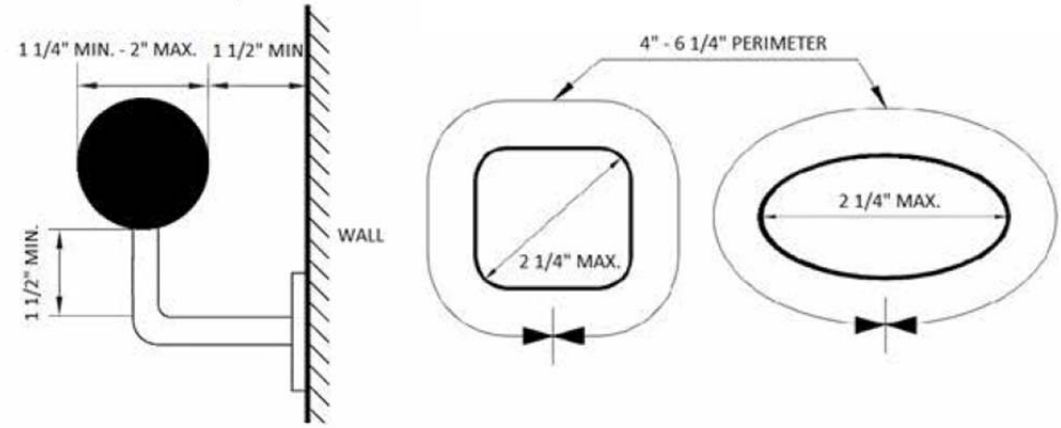

(a) HANDRAILS WITH CIRCULAR CROSS SECTION **(b) HANDRAILS WITH NON-CIRCULAR CROSS SECTION**

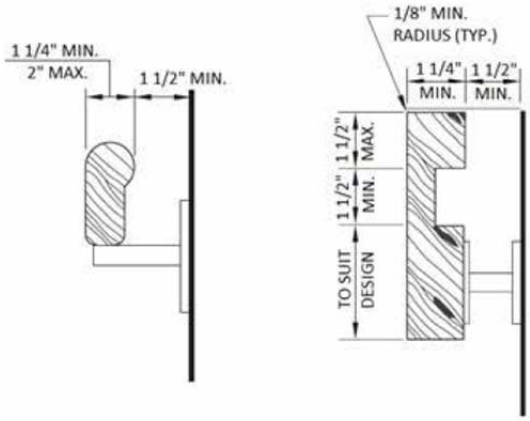

(d) HANDRAILS WITH EQUIVALENT GRIPPING SURFACES

FIGURE 11A-6B
HANDRAILS

CBC 1114A.6.2.5 and CBC 1122A.5.2.5

18. For handrails projecting from walls, detail minimum 1-1/2-inch space between wall and handrail per CBC Figure 11A-6B(a) or CBC Figure 11A-6B(d).

CBC 1114A.6.2.4 and CBC 1122A.5.2.4

19. For handrails located in recesses, detail recess complying with the following per CBC Figure 11A-6B(c):

- ❑ Maximum 3-inches deep
- ❑ Extending minimum 18 inches above top of handrail

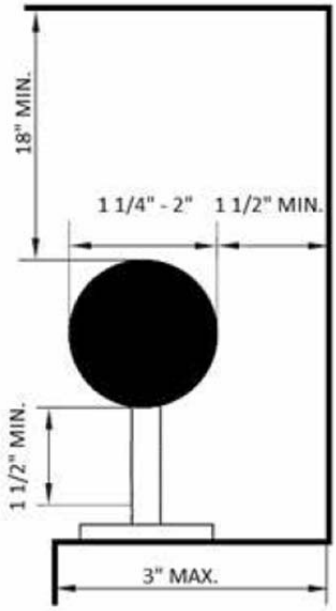

(c) HANDRAILS LOCATED IN A RECESS

FIGURE 11A-6B
HANDRAILS

CBC 1114A.6.2.4 and CBC 1122A.5.2.4

20. Specify surface material of any walls or other surface adjacent to handrails shall be free of sharp or abrasive elements.

CBC 1114A.6.2.4 and CBC 1122A.5.2.4