COC Maintenance Experience

Maintenance of Porous Pavement

Figure 1
Equipment Used to Vacuum Sweep Porous Pavement at COC

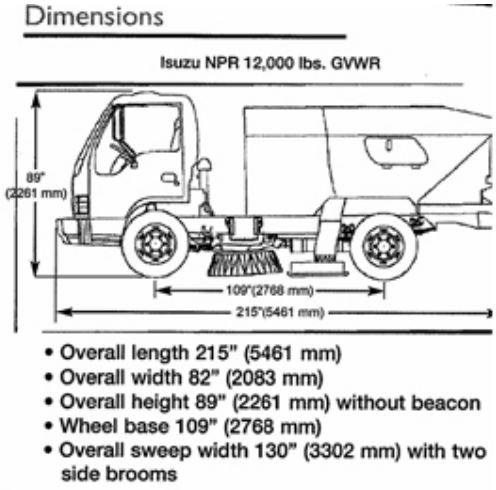

Figure 2
Dimensions for Equipment Used to Vacuum Sweep Porous Pavement at COC

Figure 3
Specifications for Equipment Used to Vacuum Sweep Porous Pavement at COC

Disposal of Debris from Vacuum Sweeper

Figure 4
Preparing to Discharge Debris from Vacuum Sweeping into Dumpster

Figure 5
Discharging One Cubic Yard of Dirt and Debris from Vacuum Sweeping into Dumpster

Figure 6
One Cubic Yard of Dirt and Debris from Vacuum Sweeping of Porous Pavement in Dumpster

Swept Porous Pavement

Figure 7
Northern Swept Area of Porous Pavement

Figure 8
Central Swept Area of Porous Pavement

Figure 9
Southern Swept Area of Porous Pavement

Maintenance Process for Treatment Train

CDS Unit-**C**ontinuous **D**eflective **S**eparator

Clean-out should be bi-annually before and after rainy season.

- Pump out water. Water removed to be dumped into manhole before MFS unit.
- Extract sediment and debris.
- Normal disposal.

MFS Unit-**M**edia **F**ilter **S**eparator

Filter changes and clean-out should be performed annually, before each rainy season.

- Confined space entry.
- Remove filter canisters from vault.
- Install new recharged canisters.

Treatment Train Maintenance

Figure 10
Initial Vactor Truck
Cleaning of CDS Unit

Figure 11
Vactor Truck Hose into
CDS Unit

Figure 12
Subsequent Vactor Truck
Cleaning of CDS Unit

Treatment Train Maintenance

Figure 13
Trash from Vactor Truck Clean Out

Figure 14
Discharging Trash from Vactor Truck Clean Out

Figure 15
Examination of Trash from Vactor Truck Clean Out

CleanLot Maintenance Services

P.O. Box 2763, Escondido, CA 92033
Phone (760) 747-0269 Fax (760) 888-0331

Quote

DATE February 1, 2007

Quote Prepared by: Mary Williams
Quotation valid until: March 10, 2007

Email: sales@cleanlotservices.com

Bill To:
Mike McNamara
County of San Diego, Department of General Services
Facilities Management
5555 Overland Avenue
San Diego, CA 92123

Job Name/Location:
County Operations Center
Building 7 parking lot
5555 Overland Avenue
San Diego, CA 92123

Purchase Order/Job Number: _____

Description of Work to Be Performed	AMOUNT
Vacuum Sweep and blowing of Job Location listed above. Parking Lot will be swept from curb-to-curb on two separate occasions. Customer to coordinate movement of vehicles. Sweeping dates to be determined. ** Customer to provide dumpster/dumpsite on property for disposal of collected debris. If no dumpster/dumpsite then dump fees will apply($100 per trip).	$500.00
Total Cost for Service:	**$ 500.00**

PAYMENT TERMS: Payments are due and payable (ten) days from the billing date. If CleanLot must initiate any legal action of any kind to collect payment for service and materials provided or to enforce any terms of this accepted quote, it sahll be entitled to recover its reasonable attorney's fees in addition to any other relief to which it maybe entitled.

All work is to be completed in a professional manner according to standard practices. Any alteration or deviation from above specifications involving extra costs will be executed only upon approval and will become an extra charge over and above quoted prices.

ACCEPTANCE OF QUOTE: The above prices, specifications and conditions are satisfactory and are accepted. The person signing this agreement verifies that he or she is authorized to do so on behalf of the company.

Acceptance Date: _____ Print Name and Title: _____

Requested Start Date: _____ Signature: _____