PLANS	BY	DATE
DESIGNED	TY/TB	4-16-07
CHECKED	ST	4-16-07
DELINEATED	NA	4-16-07

SHEET NOTES

A. REFER TO GEOLOGICAL ENGINEERING DWGS FOR METHANE BARRIER SPECIFICATIONS.

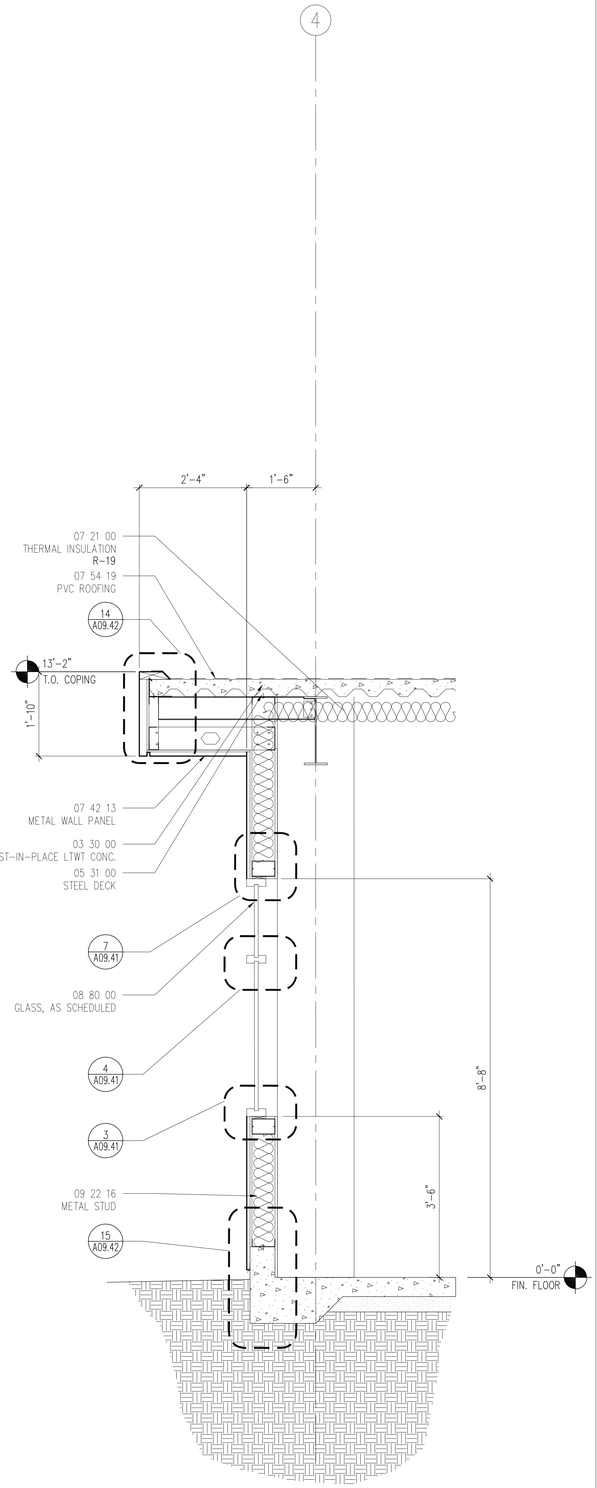

WS_20.DWG

WALL SECTION 3
SCALE: 3/4" = 1'-0"

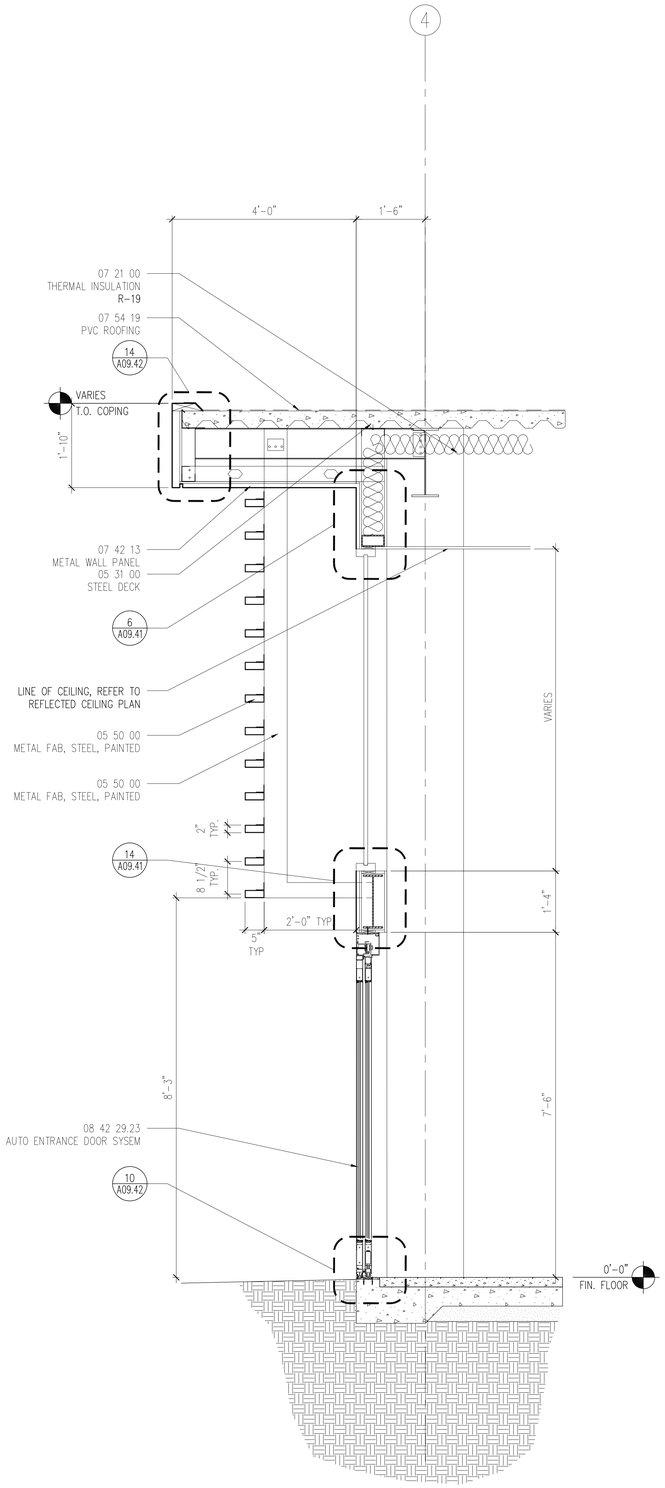

WS_19.DWG

WALL SECTION 2
SCALE: 3/4" = 1'-0"

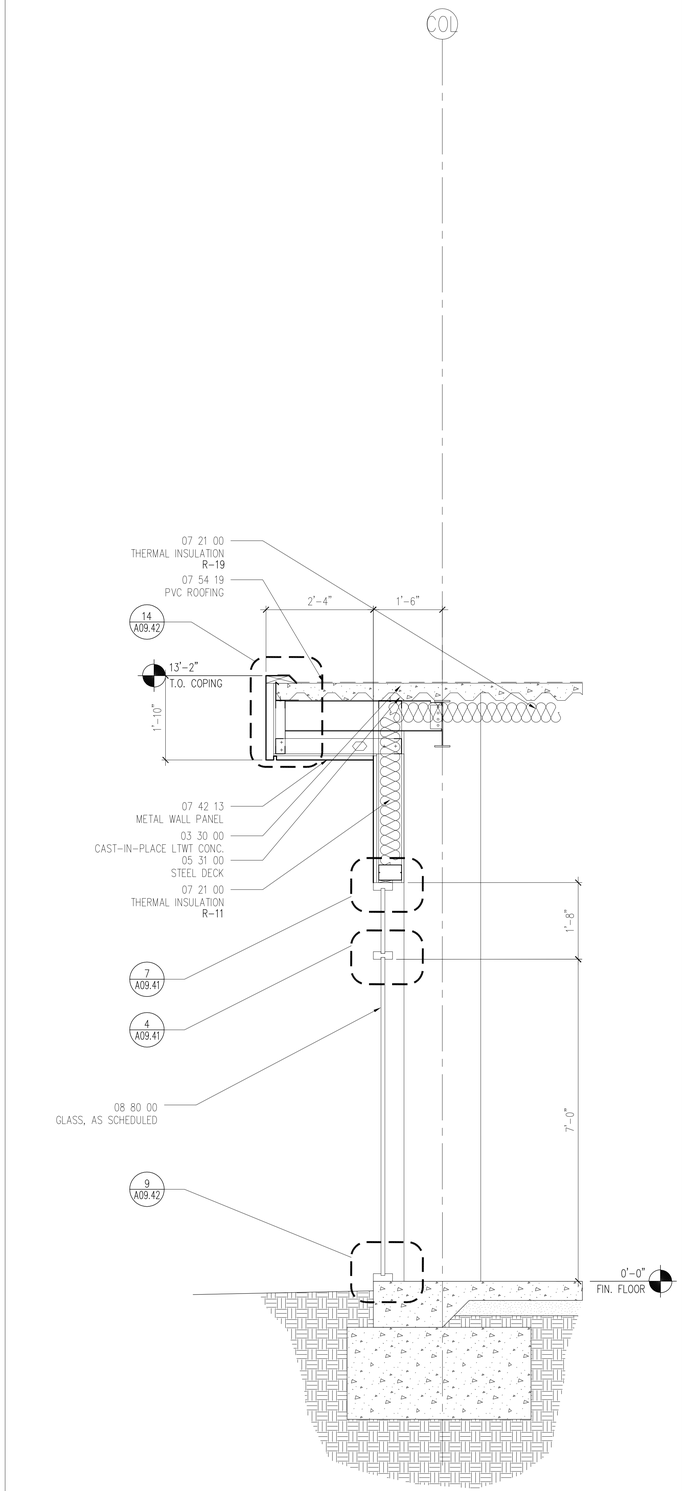

WS_18.DWG

WALL SECTION 1
SCALE: 3/4" = 1'-0"

KEY NOTES

03 30 00	CAST-IN-PLACE LTWT CONC.
05 31 00	STEEL DECK
05 50 00	METAL FAB, STEEL, PAINTED
07 21 00	THERMAL INSULATION
07 42 13	METAL WALL PANEL
07 54 19	PVC ROOFING
08 42 29.23	AUTO ENTRANCE DOOR SYSEM
08 80 00	GLASS, AS SCHEDULED
09 22 16	METAL STUD

WADELL ENGINEERING CORPORATION
WWW.WADELL.COM

Gensler
225 Broadway
Suite 1600
San Diego CA 92101
Telephone 619.557.2500
Facsimile 619.557.2520

Project # 05.6045.000

4-16-2007 **A09.37**

COUNTY OF SAN DIEGO
DEPARTMENT OF PUBLIC WORKS
5555 OVERLAND AVENUE, SAN DIEGO, CA 92123-1295

RECOMMENDED BY: _____ DATE _____
_____ DATE _____
APPROVED BY: _____ DATE _____
MOHAMMAD FAKHRRIDDINE, COUNTY ENGINEER

REVISIONS	BY	APPROVED	DATE

COORDINATE INDEX
N. _____ E. _____
CONST. COMPL. _____
FIELD REVISIONS _____

MCCLELLAN-PALOMAR AIRPORT
SCHEDULE "J"

WALL SECTIONS

SCALE: HOR. _____ VERT. _____
W.A. _____ R.S. _____
FILE NO. _____
SHEET 53 OF 182 SHEETS