JUSTICE CENTER

COUNTY OF SAN DIEGO

PROJECT NUMBER AQ091K

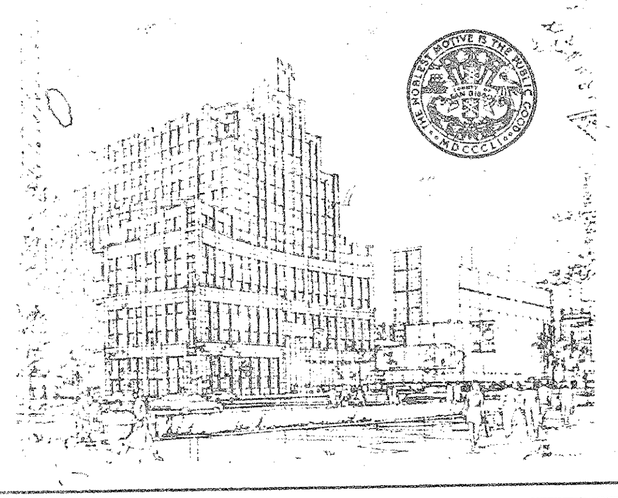

SHEET INDEX

SHEET INDEX

COVER SHEET

ARCHITECTURAL

A1.1 ARCHITECTURAL SITE PLAN
A2.1 ARCHITECTURAL FIRST FLOOR PLAN
A2.2 ARCHITECTURAL SECOND FLOOR PLAN
A2.3 ARCHITECTURAL THIRD FLOOR PLAN
A2.4 ARCHITECTURAL FOURTH FLOOR PLAN
A2.4A FOURTH FLOOR BRIDGE PLAN
A2.5 ARCHITECTURAL FIFTH FLOOR PLAN
A2.6 ARCHITECTURAL SIXTH FLOOR PLAN
A2.6A SIXTH FLOOR TRANSFER BRIDGE PLAN
A2.7 ARCHITECTURAL SEVENTH FLOOR PLAN
A2.8 ARCHITECTURAL EIGHTH FLOOR PLAN
A2.9 ARCHITECTURAL NINTH FLOOR PLAN
A2.10 ARCHITECTURAL TENTH FLOOR PLAN
A2.11 ARCHITECTURAL ELEVENTH FLOOR PLAN
A2.12 ARCHITECTURAL TWELFTH FLOOR PLAN
A2.13 ARCHITECTURAL THIRTEENTH FLOOR PLAN
A2.14 MECHANICAL FLOOR PLAN
A2.14A ROOF PLAN
A2.15 FIRST LEVEL PARKING P1
A2.16 SECOND LEVEL PARKING P2
A2.17 THIRD LEVEL PARKING P3

A3.1 SOUTH EXTERIOR ELEVATION
A3.1A LARGE SCALE SOUTH EXTERIOR ELEVATIONS
A3.2 EAST EXTERIOR ELEVATION
A3.2A LARGE SCALE EAST EXTERIOR ELEVATIONS
A3.3 NORTH EXTERIOR ELEVATION
A3.3A LARGE SCALE NORTH EXTERIOR ELEVATIONS
A3.4 WEST EXTERIOR ELEVATION
A3.5 SOUTH EXTERIOR ELEVATION
A3.6 EAST WEST SECTION S SHEETS
A3.7 EAST WEST SECTION S SHEETS
A3.8 NORTH SOUTH WEST SECTIONS LOBBY
A3.9 GARAGE SECTIONS
A3.10 BUILDING WALL SECTIONS
A3.11 BUILDING WALL SECTIONS
A3.12 BUILDING WALL SECTIONS
A3.13 PARTIAL WALL SECTIONS
A3.14 PARTIAL WALL SECTIONS

A4.1 ENLARGED COURTROOM PLAN
A4.2 ENLARGED ELEVATOR PLANS
A4.3 ENLARGED ELEVATOR PLANS
A4.4 ENLARGED ELEVATOR PLANS
A4.5 ENLARGED ELEVATOR PLANS
A4.6 ENLARGED ELEVATOR PLANS
A4.7 ENLARGED ELEVATOR SECTIONS
A4.8 ENLARGED ELEVATOR SECTIONS
A4.9 ENLARGED ELEVATOR SECTIONS AND PLANS
A4.10 ENLARGED PARTIAL ELEVATOR PLANS
A4.10A ENLARGED ELEVATOR PLANS
A4.11 ENLARGED REFLECTED CEILING PLANS
A4.12 ENLARGED REFLECTED CEILING PLANS
A4.13 ENLARGED FLOOR PATTERN PLANS
A4.14 ENLARGED ROTUNDA PLAN
A5.1 ENLARGED LOBBY ELEVATIONS
A5.2 ENLARGED GALLERY ELEVATION
A5.3 ENLARGED LOW RISE ELEVATOR LOBBY ELEVATIONS
A5.4 ENLARGED HIGH RISE ELEVATOR LOBBY ELEVATIONS
A5.5 ENLARGED COURTROOM ELEVATIONS
A5.6 ENLARGED COURTROOM MILLWORK ELEVATIONS & DETAILS
A5.7 BOOKSHELVES ELEVATIONS
A5.8 MISCELLANEOUS ENLARGED INTERIOR ELEVATIONS
A5.9 MISCELLANEOUS ENLARGED INTERIOR ELEVATIONS
A5.10 ENLARGED GRAND JURY PLAN AND ELEVATIONS
A5.11 MISCELLANEOUS MILLWORK ELEVATIONS
A5.12 MISCELLANEOUS MILLWORK ELEVATIONS
A5.13 MISCELLANEOUS MILLWORK ELEVATIONS
A5.14 MISCELLANEOUS MILLWORK ELEVATIONS
A5.15 MISCELLANEOUS MILLWORK ELEVATIONS
A5.16 RESTROOM INTERIOR ELEVATIONS
A5.17 RESTROOM INTERIOR ELEVATIONS
A5.18 RESTROOM INTERIOR ELEVATIONS

A6.1 FIRST FLOOR REFLECTED CEILING PLAN
A6.2 SECOND FLOOR REFLECTED CEILING PLAN
A6.3 THIRD FLOOR REFLECTED CEILING PLAN
A6.4 FOURTH FLOOR REFLECTED CEILING PLAN
A6.5 FIFTH FLOOR REFLECTED CEILING PLAN
A6.6 SIXTH FLOOR REFLECTED CEILING PLAN
A6.7 SEVENTH FLOOR REFLECTED CEILING PLAN
A6.8 EIGHTH FLOOR REFLECTED CEILING PLAN
A6.9 NINTH FLOOR REFLECTED CEILING PLAN
A6.10 TENTH FLOOR REFLECTED CEILING PLAN
A6.11 ELEVENTH FLOOR REFLECTED CEILING PLAN
A6.12 TWELFTH FLOOR REFLECTED CEILING PLAN
A6.13 THIRTEENTH FLOOR REFLECTED CEILING PLAN

A7.1 ENLARGED STAIR PLANS
A7.2 ENLARGED STAIR PLANS
A7.3 ENLARGED STAIR PLANS
A7.10 ENLARGED STAIR SECTIONS
A7.11 ENLARGED STAIR SECTIONS
A7.12 ENLARGED STAIR SECTIONS

COUNTY COURTS SHEET INDEX

A8.1 TYPICAL EXTERIOR DETAILS
A8.2 WINDOW DETAILS
A8.3 ENLARGED COURTYARD DETAILS
A8.4 STOREFRONT DOOR DETAILS
A8.5 ROOF DETAILS
A8.6 EXTERIOR DETAILS
A8.7 RAINSCREEN PLAN AND WALL DETAILS
A8.8 COUNTERWEIGHTS AND ROOF DETAILS
A8.9 ELEVATOR DETAILS
A8.10 FOUNTAIN DETAILS
A8.11 TYPICAL FOR CORRIDOR SECTIONS
A8.12 WATERPROOFING DETAILS
A8.13 WATERPROOFING DETAILS
A8.14 WATERPROOFING DETAILS
A8.15 PARKING SITE DETAILS
A8.16 DOOR DETAILS
A8.16A DOOR DETAILS
A8.17 STAIR DETAILS
A8.18 SLAB EDGE CONDITIONS
A8.19 LOBBY DETAILS
A8.19A LOBBY DETAILS
A8.20 MISCELLANEOUS DETAILS

A9.1 CABINET DETAILS
A9.2 CABINET DETAILS
A9.3 CABINET DETAILS
A9.4 CABINET DETAILS

STRUCTURAL

S1.1 GENERAL NOTES
S1.2 GENERAL NOTES
S1.3 TYPICAL DETAILS
S1.4 TYPICAL DETAILS
S1.5 TYPICAL DETAILS
S1.6 TYPICAL DETAILS

S2.01 THIRD LEVEL PARKING PLAN
S2.02 THIRD LEVEL PARKING PLAN
S2.03 SECOND LEVEL PARKING PLAN
S2.04 SECOND LEVEL PARKING PLAN
S2.05 FIRST LEVEL PARKING PLAN
S2.06 FIRST LEVEL PARKING PLAN
S2.07 FIRST FLOOR PLAN
S2.08 FIRST FLOOR PLAN
S2.09 SECOND FLOOR PLAN
S2.10 THIRD FLOOR PLAN
S2.11 FOURTH FLOOR PLAN
S2.12 FOURTH FLOOR PLAN
S2.13 SIXTH FLOOR PLAN
S2.14 SIXTH FLOOR PLAN
S2.15 EIGHTH FLOOR PLAN
S2.16 EIGHTH FLOOR PLAN
S2.17 NINTH FLOOR PLAN
S2.18 BRIDGE FRAMING PLANS AND DETAILS

S3.01 ROOF FRAME ELEVATION LINE 1A (SOUTH WALL)
S3.02 ROOF FRAME ELEVATION LINE 1 (NORTH WALL)
S3.03 ROOF FRAME ELEVATION LINE 1
S3.04 ROOF FRAME ELEVATION
S3.05 ROOF FRAME ELEVATION
S3.06 BRACED FRAME ELEVATIONS AND DETAILS
S3.07 NONFRAME ELEVATIONS AND DETAILS

S4.01 FOOTING SCHEDULE AND DETAILS
S4.02 SECTIONS AND DETAILS
S4.03 SECTIONS AND DETAILS
S4.04 ELEVATIONS AND SECTIONS
S4.05 SECTIONS AND DETAILS
S4.06 SECTIONS AND DETAILS
S4.07 ELEVATIONS AND SECTIONS

S5.01 STEEL DETAILS
S5.02 TRUSS ELEVATIONS AND DETAILS

MECHANICAL

M1.1 HVAC AND SCHEDULE ABBREVIATIONS
M1.2 EQUIPMENT SCHEDULE

M2.1 FIRST FLOOR HVAC PLAN
M2.2 SECOND FLOOR HVAC PLAN
M2.3 THIRD FLOOR HVAC PLAN
M2.4 FOURTH FLOOR HVAC PLAN
M2.5 FIFTH FLOOR HVAC PLAN
M2.6 SIXTH FLOOR HVAC PLAN
M2.7 SEVENTH FLOOR HVAC PLAN
M2.8 EIGHTH FLOOR HVAC PLAN
M2.9 NINTH FLOOR HVAC PLAN
M2.10 TENTH FLOOR HVAC PLAN
M2.11 ELEVENTH FLOOR HVAC PLAN
M2.12 TWELFTH FLOOR HVAC PLAN
M2.13 THIRTEENTH FLOOR HVAC PLAN
M2.14 ROOF HVAC PLAN
M2.15 PARKING LEVEL P1 HVAC PLAN
M2.16 PARKING LEVEL P2 HVAC PLAN
M2.17 PARKING LEVEL P3 HVAC PLAN

M3.1 SIXTH FLOOR PANEL COMPLEX
M3.2 MECHANICAL EQUIPMENT PLAN
M3.3 ROOF DEMOLITION PLAN

M4.1 SECTIONS AND DETAILS
M4.2 DUCT DETAILS
M4.3 DUCT DETAILS

M5.1 PIPING SCHEMATIC CHILLED AND CONDENSER WATER
M5.2 PIPING SCHEMATIC HOT WATER

M6.1 HVAC WIRING DIAGRAMS

PLUMBING

P2.1 FIRST FLOOR PLUMBING PLAN
P2.2 SECOND FLOOR PLUMBING PLAN
P2.3 THIRD FLOOR PLUMBING PLAN
P2.4 FOURTH FLOOR PLUMBING PLAN
P2.5 FIFTH FLOOR PLUMBING PLAN
P2.6 SIXTH FLOOR PLUMBING PLAN
P2.7 SEVENTH FLOOR PLUMBING PLAN
P2.8 EIGHTH FLOOR PLUMBING PLAN
P2.9 NINTH FLOOR PLUMBING PLAN
P2.10 TENTH FLOOR PLUMBING PLAN
P2.11 ELEVENTH FLOOR PLUMBING PLAN
P2.12 TWELFTH FLOOR PLUMBING PLAN
P2.13 THIRTEENTH FLOOR PLUMBING PLAN
P2.14 MECHANICAL EQUIPMENT PLUMBING PLAN
P2.15 ROOF FLOOR PLUMBING PLAN
P2.16 FIRST LEVEL PARKING PLUMBING PLAN
P2.17 SECOND LEVEL PARKING PLUMBING PLAN
P2.18 THIRD LEVEL PARKING PLUMBING PLAN

P3.1 TOILET ROOM PLANS
P3.2 TOILET ROOM PLANS
P3.3 TOILET ROOM PLANS

P4.1 WATER & WASTE RISER DIAGRAMS
P4.2 [illegible]
P4.3 DEWATERING SUMP PUMP DIAGRAM
P4.4 HOT WATER & COLD WATER MONITOR DIAGRAMS
P5.1 SCHEDULES CEILING NOTES & DETAILS

E0.1 ELECTRICAL SITE PLAN
E1.1 [illegible]
E1.2 [illegible]
E1.3 [illegible]
E1.4 [illegible]
E1.5 [illegible]
E1.6 [illegible]
E1.7 [illegible]
E1.8 [illegible]
E1.9 [illegible]
E1.10 [illegible]
E1.11 [illegible]
E1.12 [illegible]
E1.13 [illegible]
E1.14 [illegible]
E1.15 [illegible]
E1.16 [illegible]
E1.17 [illegible]
E1.18 [illegible]
E1.19 [illegible]
E1.20 [illegible]
E1.21 [illegible]
E1.22 [illegible]
E1.23 [illegible]
E1.24 [illegible]
E1.25 [illegible]
E1.26 [illegible]
E1.27 [illegible]
E1.28 [illegible]
E1.29 [illegible]

ALL IDEAS, DESIGN, ARRANGEMENTS AND PLANS INDICATED OR REPRESENTED BY THIS DRAWING ARE OWNED BY, AND THE PROPERTY OF, BSHA, INC., AND WERE CREATED, EVOLVED AND DEVELOPED FOR USE ON, AND IN CONNECTION WITH THIS PROJECT. NONE OF SUCH IDEAS, DESIGN, ARRANGEMENTS OR PLANS SHALL BE USED BY, OR DISCLOSED TO ANY PERSON, FIRM, OR CORPORATION FOR ANY PURPOSE WHATSOEVER WITHOUT THE WRITTEN PERMISSION OF BSHA, INC. FILING THESE DRAWINGS OR SPECIFICATIONS WITH ANY PUBLIC AGENCY IS NOT A PUBLICATION OF SAME. NO COPYING, REPRODUCTION OR USE THEREOF IS PERMISSIBLE WITHOUT THE CONSENT OF BSHA, INC.

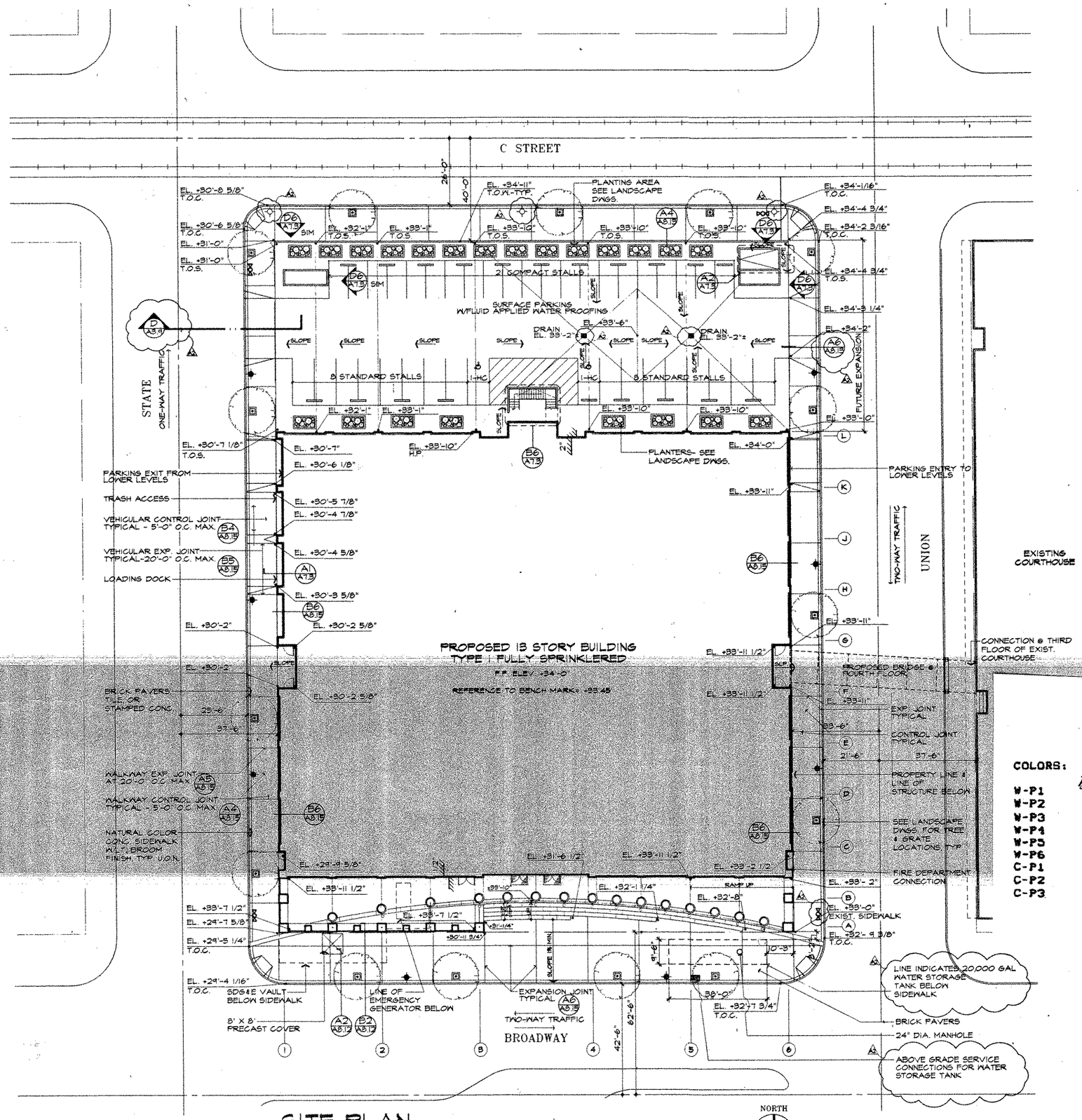

SITE PLAN

SCALE: 1/16"= 1'-0"

NOTES

1. REFER TO CIVIL DWGS. FOR BUILDING FOR DIMENSIONS AND LOCATION.
2. FIRE HYDRANTS SHALL COMPLY WITH FIRE DEPARTMENT REQUIREMENTS FOR ON-SITE HYDRANTS

LEGEND

- FIRE HYDRANT
- LIGHT STANDARD
- PLANTING AREA
- EXISTING LIGHT STANDARD & TROLLEY POLE

PAINT COLORS
~~Mpdx~~ COURT HOUSE

COLORS: Benjamin Moore

W-P1	BM 1638	GRAY	SEMI/GLOSS	$17.33/per gallon
W-P2	BM 946	IVORY	SEMI/GLOSS	$17.33
W-P3	BM 946	IVORY	GLOSS	$21.49
W-P4	BM 832	BLUE	SEMI/GLOSS	$17.33
W-P5	BM 192	SAND	SEMI/GLOSS	$17.33
W-P6	BM 192	SAND	GLOSS	$21.49
C-P1	BM 967	WHITE	FLAT	$13.14
C-P2	BM 967	WHITE	GLOSS	$21.49
C-P3	BM 1638	GRAY	FLAT	$13.14
	BM 946	~~EV6~~ Ivory	Eg-shell	$16.54

BSHA
Architecture
Planning
Interior Design
Engineering
919 Fourth Avenue
Suite 200
San Diego, California 92101
619 233-2353
FAX 619 239-8227
President:
Gordon R. Carter, Architect
Director of Design:
Robert L. Domke, Jr., Architect

LICENSED ARCHITECT
MICHAEL C. JOHNSON
No. C-24337
REN 2-28-01
STATE OF CALIFORNIA

JUSTICE CENTER
COUNTY OF SAN DIEGO
PROJECT NUMBER AQ091K

DATE
PROJECT NO. 2621.00
DRAWN A.E.K./V.J.P.
CHECKED FH
FILE NO. 2621AF01 12/14/94

SITE PLAN

A1.1

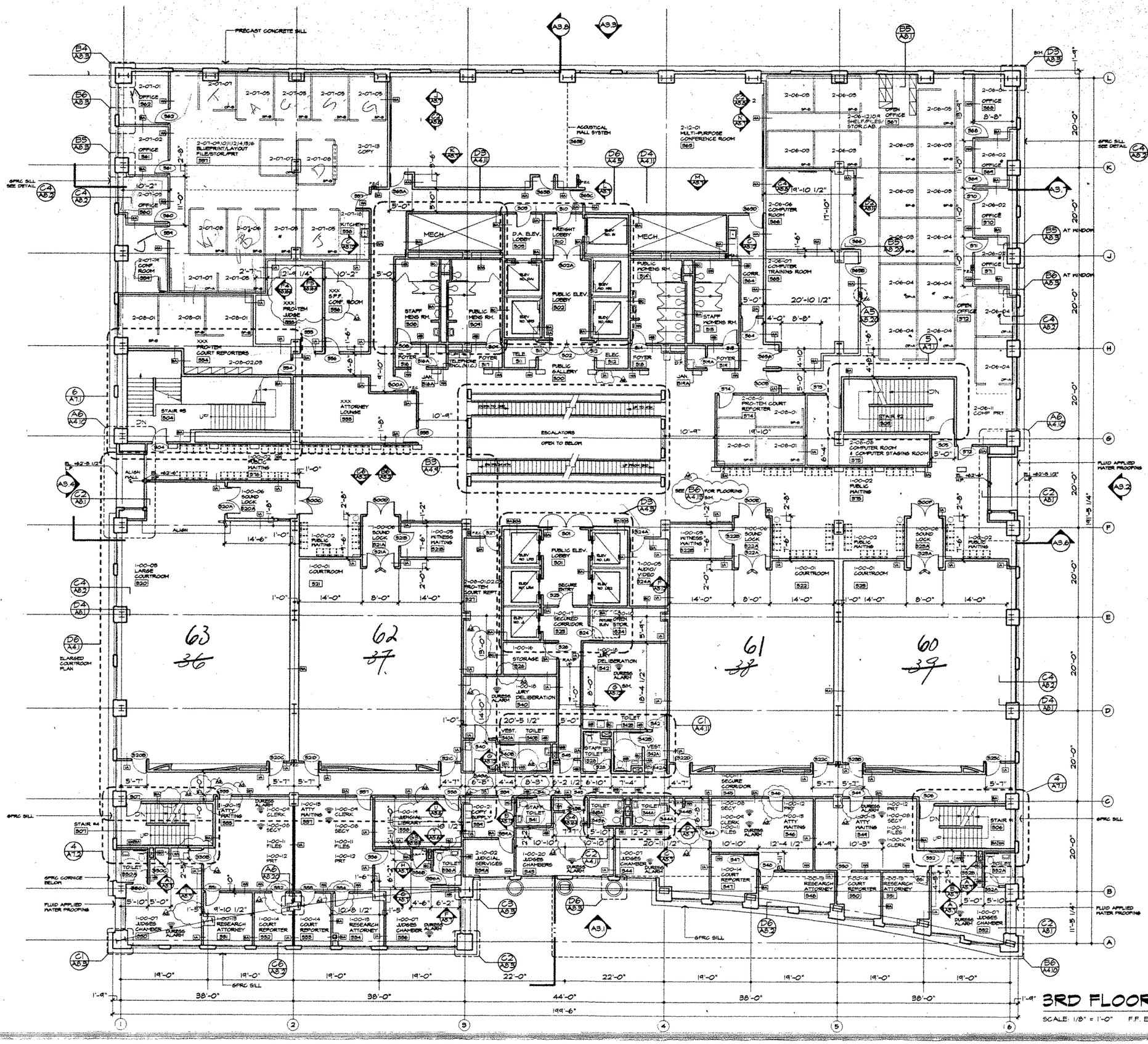

SPACE PLAN LEGEND

DEPT. I.D. 2 SUPERIOR COURT ADMINISTRATION
1 COURT MODULE

DIV. I.D. 12 MULTI-PURPOSE CONFERENCE ROOM
10 JUDICIAL SERVICES
08 PRO-TEM COURT REPORTER
07 ADMINISTRATIVE SERVICES
06 INFORMATION SERVICES

LEGEND

F.E.C. INDICATES SEMI RECESSED FIRE EXTINGUISHER CABINET W/ 2A10BC FIRE EXTINGUISHER

TRASH CAN N.I.C.

BULLETIN BOARD N.I.C.

SH INDICATES WALL TYPES. SEE SHEET A8.1

PUBLIC WAITING SEATING, N.I.C.

Architecture
Planning
Interior Design
Engineering

510 Fourth Avenue
Suite 200
San Diego, California 92101

619 239-2353
FAX 619 236-6227

President:
Gordon R. Carter, Architect
Director of Design:
Robert L. Davis, Jr., Architect

LICENSED ARCHITECT
Donald C. Johnson
No. C-24337
Exp. 12-31-95
STATE OF CALIFORNIA

JUSTICE CENTER
COUNTY OF SAN DIEGO
PROJECT NUMBER AQ091K

ISSUES CONSTRUCTION SET

CONSTRUCTION SET
DEC 14 1994

DATE
PROJECT NO. 2621.00
DRAWN J.H.G., A.E.K.
CHECKED P.H.
FILE NO. F:\DRAWINGS\2621\3D\2621AF03 11/22/94 14:23

THIRD FLOOR PLAN

3RD FLOOR PLAN

SCALE: 1/8" = 1'-0" F.F. ELEVATION +62'-6"

NORTH

A2.3

ALL IDEAS, DESIGN, ARRANGEMENTS AND PLANS INDICATED OR REPRESENTED BY THIS DRAWING ARE OWNED BY, AND THE PROPERTY OF, BSHA, INC. AND WERE CREATED, EVOLVED AND DEVELOPED FOR USE ON, AND IN CONNECTION WITH THIS PROJECT. NONE OF SUCH IDEAS, DESIGN, ARRANGEMENTS OR PLANS SHALL BE USED BY, OR DISCLOSED TO ANY PERSON, FIRM, OR CORPORATION FOR ANY PURPOSE WHATSOEVER WITHOUT THE WRITTEN PERMISSION OF BSHA, INC. FILING THESE DRAWINGS OR SPECIFICATIONS WITH ANY PUBLIC AGENCY IS NOT A PUBLICATION OF SAME. NO COPYING, REPRODUCTION OR USE THEREOF IS PERMISSIBLE WITHOUT THE CONSENT OF BSHA, INC.

ALL IDEAS, DESIGN, ARRANGEMENTS AND PLANS INDICATED OR REPRESENTED BY THIS DRAWING ARE OWNED BY, AND THE PROPERTY OF, BSHA, INC. AND WERE CREATED, EVOLVED AND DEVELOPED FOR USE ON, AND IN CONNECTION WITH THIS PROJECT. NONE OF SUCH IDEAS, DESIGN, ARRANGEMENTS OR PLANS SHALL BE USED BY, OR DISCLOSED TO ANY PERSON, FIRM, OR CORPORATION FOR ANY PURPOSE WHATSOEVER WITHOUT THE WRITTEN PERMISSION OF BSHA, INC. FILING THESE DRAWINGS OR SPECIFICATIONS WITH ANY PUBLIC AGENCY IS NOT A PUBLICATION OF SAME. NO COPYING, REPRODUCTION OR USE THEREOF IS PERMISSIBLE WITHOUT THE CONSENT OF BSHA, INC.

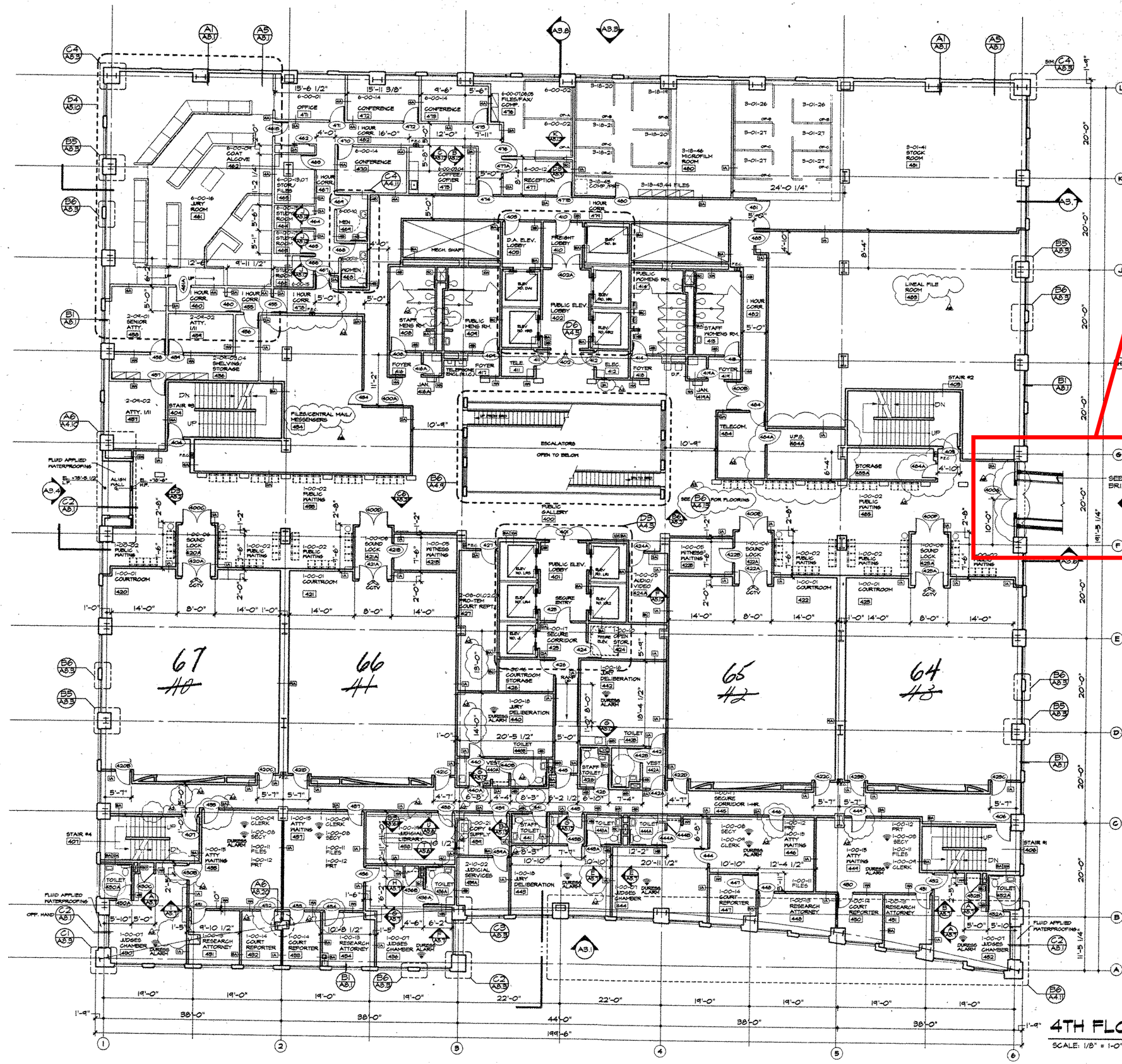

4TH FLOOR PLAN

SCALE: 1/8" = 1-0" F.F. ELEVATION +78'-6"

NORTH

SPACE PLAN LEGEND

DEPT. I.D. 6 OFFICE OF THE GRAND JURY
3 DISTRICT ATTORNEY
1 COURT MODULE

DIV. I.D. 18 SUPERIOR COURT
10 JUDICIAL SERVICES
01 ADMINISTRATION
00 GRAND JURY

LEGEND

F.E.C. INDICATES SEMI RECESSED FIRE EXTINGUISHER CABINET W/ 2A10BC FIRE EXTINGUISHER

TRASH CAN N.I.C.

BULLETIN BOARD N.I.C.

INDICATES WALL TYPES. SEE SHEET A8.1

PUBLIC WAITING SEATING, N.I.C.

BSHA
Architecture
Planning
Interior Design
Engineering
919 Fourth Avenue
Suite 32
San Diego, California 92101
619 230
FAX 619. 239-4227
President
Gordon R. Carter, Architect
Director of Design
Robert L. Dorki, Jr., Architect
LICENSED ARCHITECT MICHAEL C. JOHNSON No. C-24337 REN 6-30-95 STATE OF CALIFORNIA

JUSTICE CENTER
COUNTY OF SAN DIEGO
PROJECT NUMBER A0091K

ISSUES CONSTRUCTION SET

CONSTRUCTION SET DEC 14 1994

DATE
PROJECT NO. 26-21.00
DRAWN J.H.G., A.E.K.
CHECKED P.H.
TILE NO.
P:\DRAWINGS\25-21\26-21\AF04 12/15/94

FOURTH FLOOR PLAN

A2.4

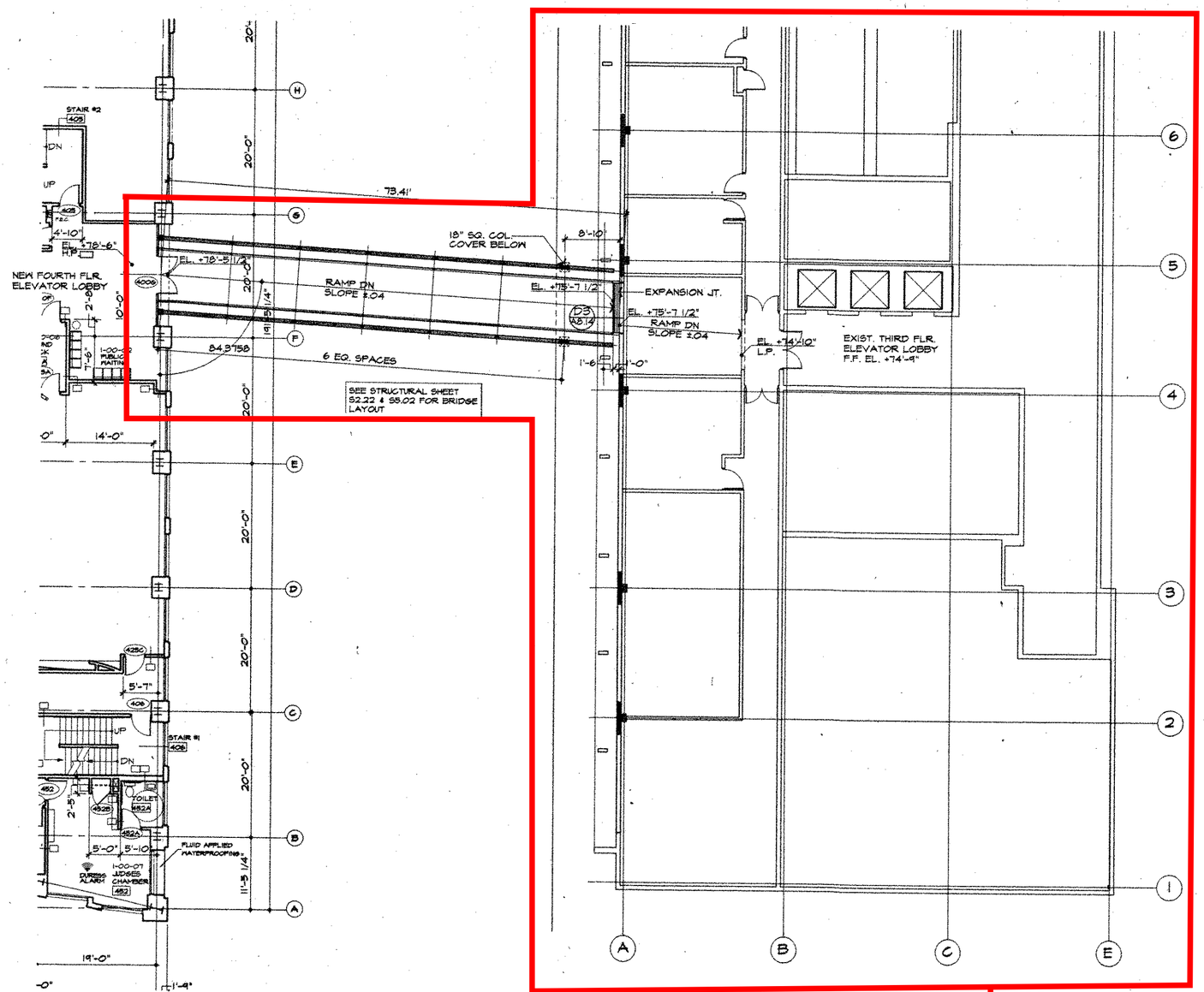

4TH FLOOR BRIDGE PLAN

SCALE: 1/8" = 1'-0" F.F. ELEVATION VARIES

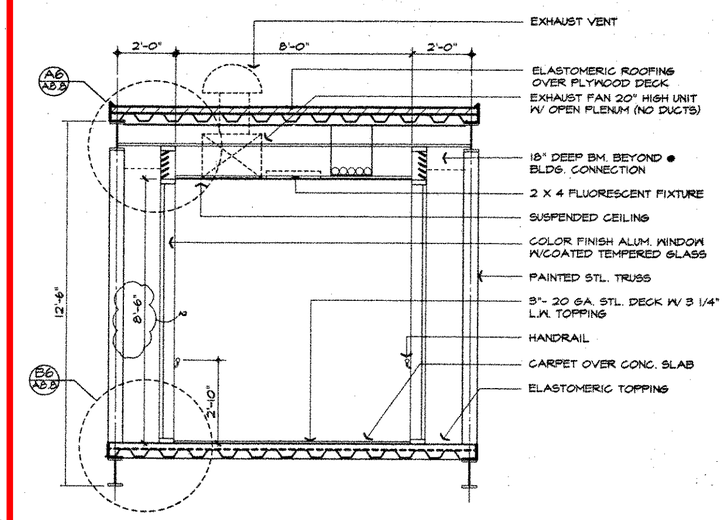

BRIDGE- SECTION

SCALE: 1/2" = 1'-0"

EXISTING BRIDGE AND COURTHOUSE TO BE DEMOLISHED

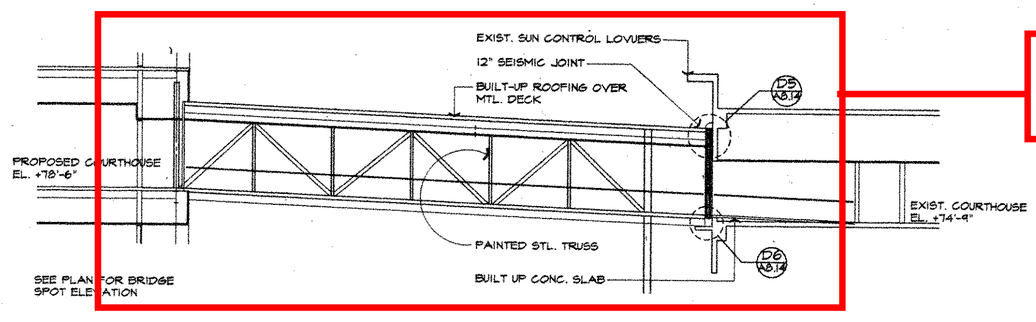

BRIDGE- LONGITUDINAL SECTION

SCALE: 1/8" = 1'-0"

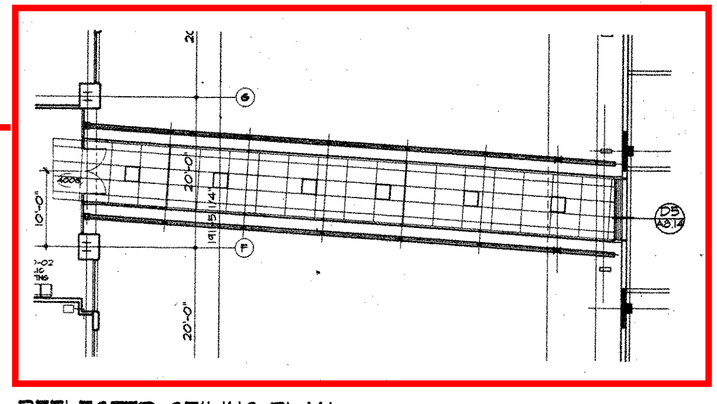

REFLECTED CEILING PLAN

SCALE: 1/8" = 1'-0"

ALL IDEAS, DESIGN, ARRANGEMENTS AND PLANS INDICATED OR REPRESENTED BY THIS DRAWING ARE OWNED BY, AND THE PROPERTY OF, BSHA, INC. AND WERE CREATED, EVOLVED AND DEVELOPED FOR USE ON, AND IN CONNECTION WITH THIS PROJECT. NONE OF SUCH IDEAS, DESIGN, ARRANGEMENTS OR PLANS SHALL BE USED BY, OR DISCLOSED TO ANY PERSON, FIRM, OR CORPORATION FOR ANY PURPOSE WHATSOEVER WITHOUT THE WRITTEN PERMISSION OF BSHA, INC. FILING THESE DRAWINGS OR SPECIFICATIONS WITH ANY PUBLIC AGENCY IS NOT A PUBLICATION OF SAME. NO COPYING, REPRODUCTION OR USE THEREOF IS PERMISSIBLE WITHOUT THE CONSENT OF BSHA, INC.

BSHA
Architecture
Planning
Interior Design
Engineering
619 Fourth Avenue
Suite 200
San Diego, California 92101
619 236-2353
FAX 619 236-8227
President:
Gordon R. Carter, Architect
Director of Design:
Robert L. Dodds, Jr., Architect

LICENSED ARCHITECT RODNEY C. JOHNSON No. C-24307 REN 2-28-95 STATE OF CALIFORNIA

JUSTICE CENTER
COUNTY OF SAN DIEGO
PROJECT NUMBER AQ091K

FIRE DEPARTMENT RECHECK 11/28/94

ISSUES CONSTRUCTION SET

CONSTRUCTION SET DEC 14 1994

DATE
PROJECT NO. 262100
DRAWN V.J.P.
CHECKED P.H.
FILE NO.
F:\DRAWINGS\262\262\AF04 06/16/94 14:57

FOURTH FLOOR BRIDGE PLAN

A2.4A

ALL IDEAS, DESIGN, ARRANGEMENTS AND PLANS INDICATED OR REPRESENTED BY THIS DRAWING ARE OWNED BY, AND THE PROPERTY OF, BSHA, INC. AND WERE CREATED, EVOLVED AND DEVELOPED FOR USE ON, AND IN CONNECTION WITH THIS PROJECT. NONE OF SUCH IDEAS, DESIGN, ARRANGEMENTS OR PLANS SHALL BE USED BY, OR DISCLOSED TO ANY PERSON, FIRM, OR CORPORATION FOR ANY PURPOSE WHATSOEVER WITHOUT THE WRITTEN PERMISSION OF BSHA, INC. FILING THESE DRAWINGS OR SPECIFICATIONS WITH ANY PUBLIC AGENCY IS NOT A PUBLICATION OF SAME. NO COPYING, REPRODUCTION OR USE THEREOF IS PERMISSIBLE WITHOUT THE CONSENT OF BSHA, INC.

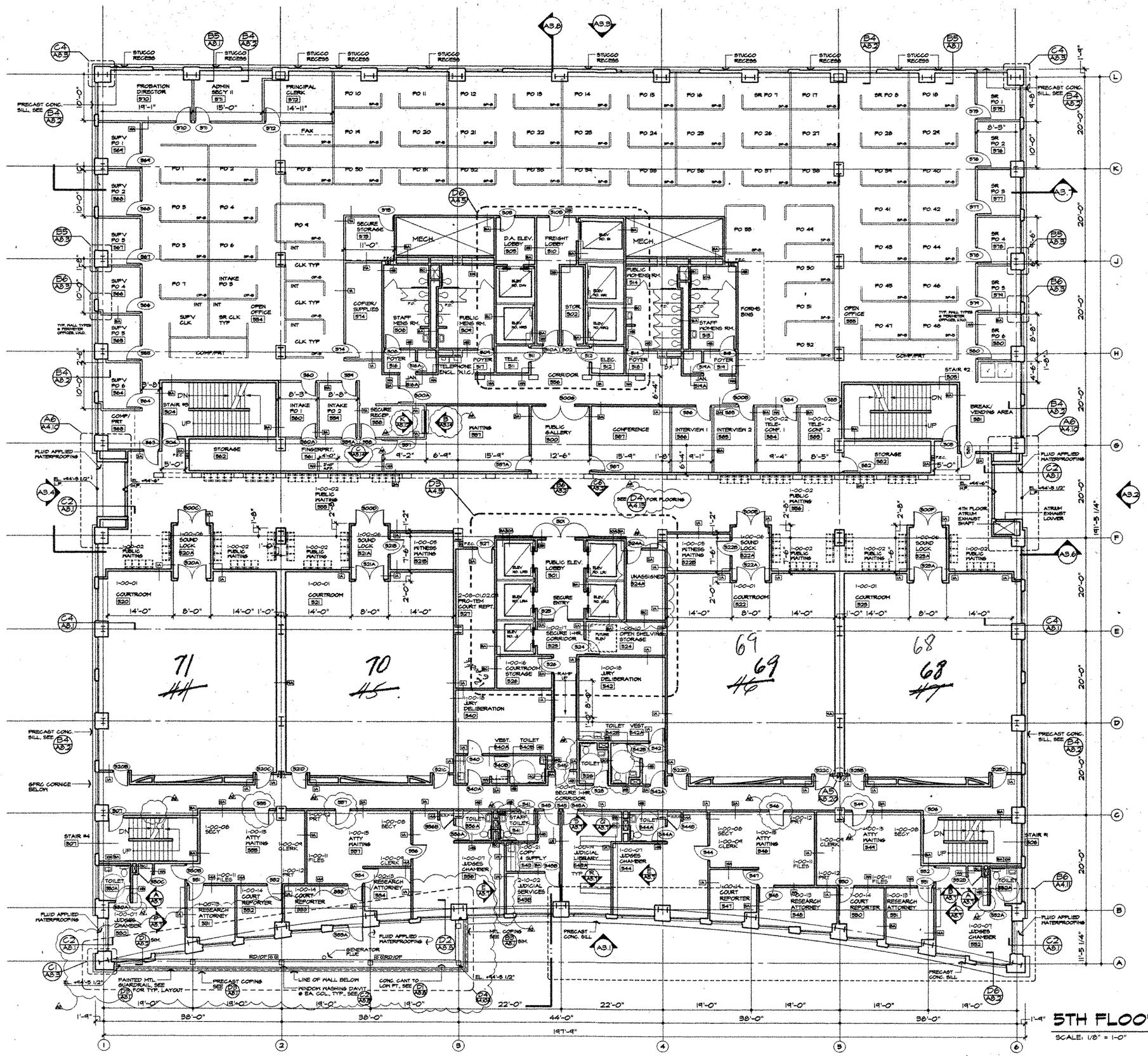

SPACE PLAN LEGEND

DEPT. I.D. 2 SUPERIOR COURT ADMINISTRATION
1 COURT MODULE

DIV. I.D. 10 JUDICIAL SERVICES

LEGEND

F.E.C. INDICATES SEMI RECESSED FIRE EXTINGUISHER CABINET W/ 2A10BC FIRE EXTINGUISHER

TRASH CAN N.I.C.

BULLETIN BOARD N.I.C.

INDICATES WALL TYPES SEE SHEET A8.7

PUBLIC WAITING SEATING, N.I.C.

Architecture
Planning
Interior Design
Engineering

518 Fourth Avenue
Suite 200
San Diego, California 92101

619 238-2363
FAX 619 238-8227

President
Gordon R. Carter, Architect
Director of Design
Robert L. Banks, Jr., Architect

LICENSED ARCHITECT
MICHAEL C. JOHNSON
No. C-24337
REN. 12-31-95
STATE OF CALIFORNIA

JUSTICE CENTER
COUNTY OF SAN DIEGO
PROJECT NUMBER AQ091K

ISSUES CONSTRUCTION SET

CONSTRUCTION SET
DEC 14 1994

DATE
PROJECT NO. 2621.00
DRAWN J.F.G., A.E.K.
CHECKED P.H.
FILE NO.
F:\DRAWINGS\2621\2621AF05 12/13/94 11:24

5TH FLOOR PLAN

SCALE: 1/8" = 1'-0" F.F. ELEVATION +94'-6"

NORTH

FIFTH FLOOR PLAN

A2.5

ALL IDEAS, DESIGN, ARRANGEMENTS AND PLANS INDICATED OR REPRESENTED BY THIS DRAWING ARE OWNED BY, AND THE PROPERTY OF, BSHA, INC. AND WERE CREATED, EVOLVED AND DEVELOPED FOR USE ON, AND IN CONNECTION WITH THIS PROJECT. NONE OF SUCH IDEAS, DESIGN, ARRANGEMENTS OR PLANS SHALL BE USED BY, OR DISCLOSED TO ANY PERSON, FIRM, OR CORPORATION FOR ANY PURPOSE WHATSOEVER WITHOUT THE WRITTEN PERMISSION OF BSHA, INC. PLANS THESE DRAWINGS OR SPECIFICATIONS PURPORTING TO BE A PUBLICATION OF SAME. NO COPYING, REPRODUCTION OR USE THEREOF IS PERMISSIBLE WITHOUT THE CONSENT OF BSHA, INC.

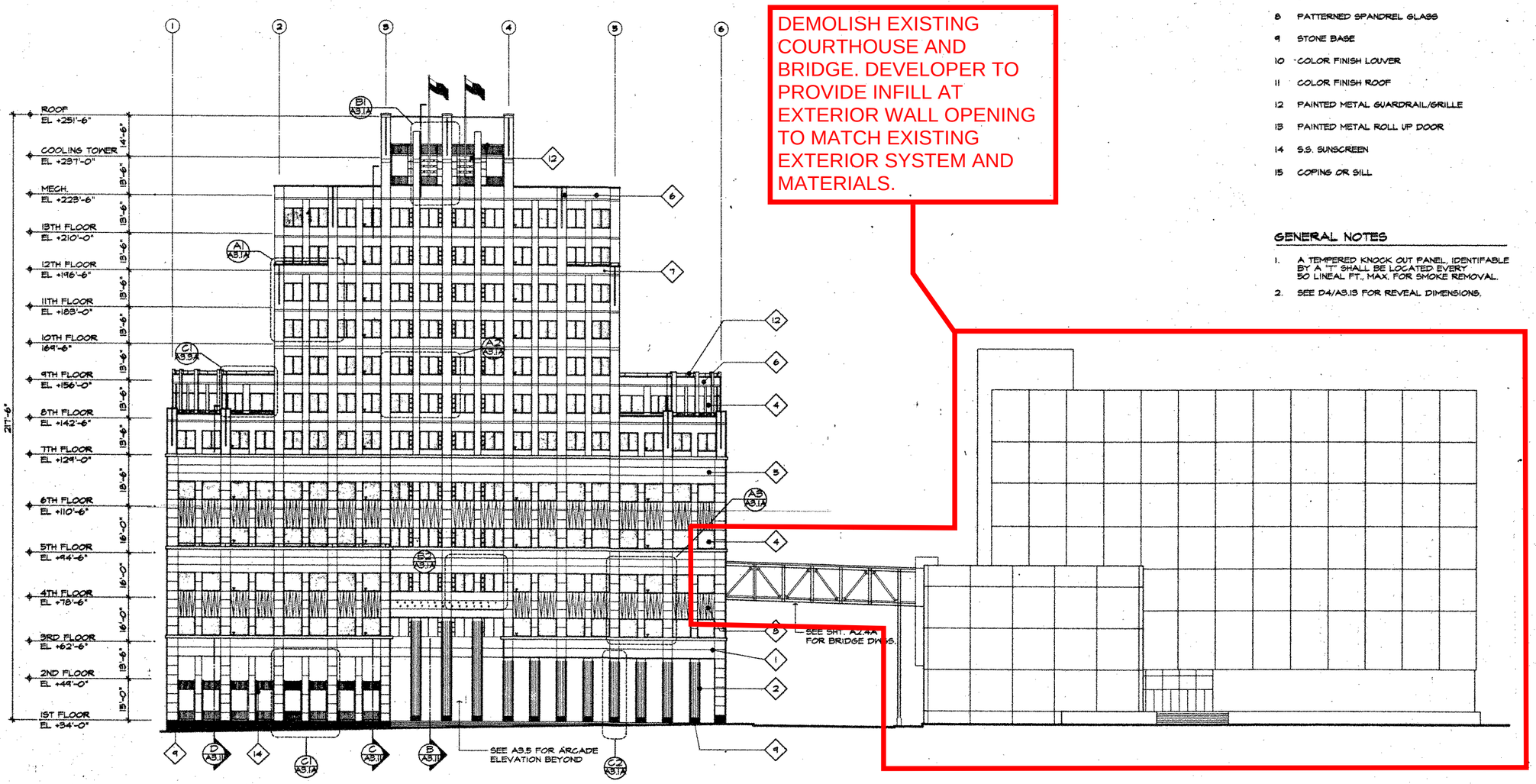

DEMOLISH EXISTING COURTHOUSE AND BRIDGE. DEVELOPER TO PROVIDE INFILL AT EXTERIOR WALL OPENING TO MATCH EXISTING EXTERIOR SYSTEM AND MATERIALS.

BROADWAY (SOUTH) ELEVATION

SCALE: 1/16" = 1'-0"

KEYNOTES

1 GFRC COLOR A LEVEL 1-2
2 PRECAST COLUMN
3 STOREFRONT GLAZING SYSTEM
4 COLOR FINISH ALUMINUM WINDOWS WITH COATED GLASS
5 STUCCO COLOR A
6 STUCCO COLOR B
7 STUCCO COLOR C
8 PATTERNED SPANDREL GLASS
9 STONE BASE
10 COLOR FINISH LOUVER
11 COLOR FINISH ROOF
12 PAINTED METAL GUARDRAIL/GRILLE
13 PAINTED METAL ROLL UP DOOR
14 S.S. SUNSCREEN
15 COPING OR SILL

GENERAL NOTES

1. A TEMPERED KNOCK OUT PANEL, IDENTIFABLE BY A "T" SHALL BE LOCATED EVERY 50 LINEAL FT., MAX. FOR SMOKE REMOVAL.
2. SEE D4/A3.13 FOR REVEAL DIMENSIONS.

BSHA
Architecture
Planning
Interior Design
Engineering
918 Fourth Avenue
Suite 200
San Diego, California 92101
619 239-2303
FAX 619 239-9227
President
Gordon R. Carter, Architect
Director of Design
Robert L. Dorfe, Jr., Architect

LICENSED ARCHITECT
GORDON C. HOWARD
No. C-26357
REN 6-30-97
STATE OF CALIFORNIA

JUSTICE CENTER
COUNTY OF SAN DIEGO
PROJECT NUMBER A0001K

PRE DEVELOPMENT MODEL 11/25/98

CONSTRUCTION SET

CONSTRUCTION SET
DEC. 1, 1999

DATE	
PROJECT NO.	262100
DRAWN	VJP
CHECKED	PN
FILE NO.	
P:\DRAWINGS\262100\262100A.DG	11/02/98

SOUTH ELEVATION

A3.1

23

ALL IDEAS, DESIGN, ARRANGEMENTS AND PLANS INDICATED OR REPRESENTED BY THIS DRAWING ARE OWNED BY, AND THE PROPERTY OF, BSHA, INC. AND WERE CREATED, EVOLVED AND DEVELOPED FOR USE ON, AND IN CONNECTION WITH THIS PROJECT. NONE OF SUCH IDEAS, DESIGN, ARRANGEMENTS OR PLANS SHALL BE USED BY, OR DISCLOSED TO ANY PERSON, FIRM, OR CORPORATION FOR ANY PURPOSE WHATSOEVER WITHOUT THE WRITTEN PERMISSION OF BSHA, INC. FILING THESE DRAWINGS OR SPECIFICATIONS WITH ANY PUBLIC AGENCY IS NOT A PUBLICATION OF SAME. NO COPYING, REPRODUCTION OR USE THEREOF IS PERMISSIBLE WITHOUT THE CONSENT OF BSHA, INC.

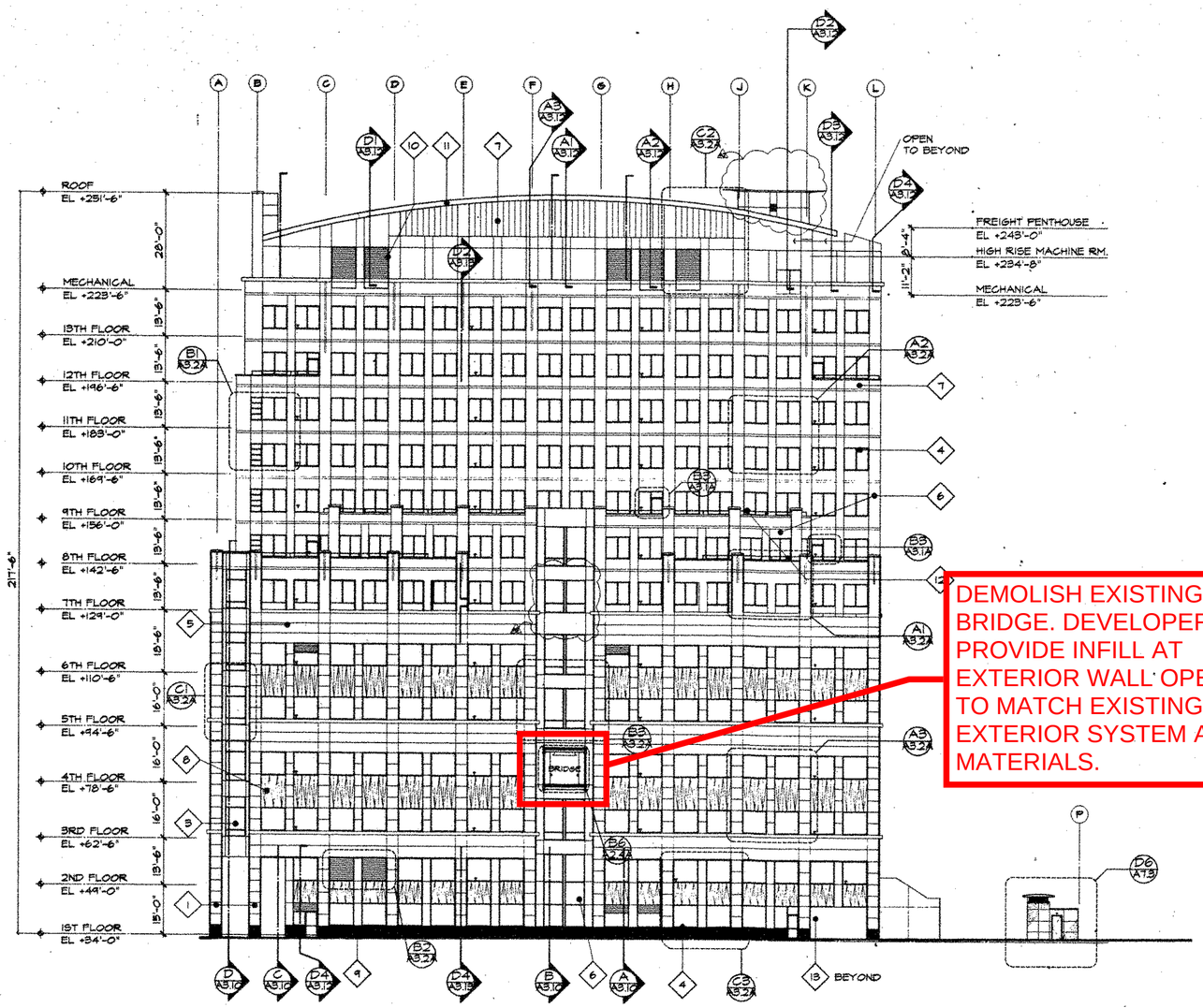

DEMOLISH EXISTING BRIDGE. DEVELOPER TO PROVIDE INFILL AT EXTERIOR WALL OPENING TO MATCH EXISTING EXTERIOR SYSTEM AND MATERIALS.

UNION STREET (EAST) ELEVATION

SCALE: 1/16" = 1'-0"

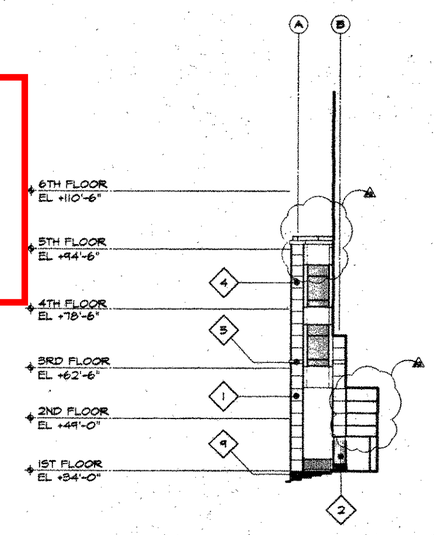

EAST ELEV. @ ENTRY

SCALE: 1/16" = 1'-0"

KEYNOTES

1. GFRC COLOR A LEVEL 1-2
2. PRECAST COLUMN
3. STOREFRONT GLAZING SYSTEM
4. COLOR FINISH ALUMINUM WINDOWS WITH COATED GLASS
5. STUCCO COLOR A
6. STUCCO COLOR B
7. STUCCO COLOR C
8. PATTERNED SPANDREL GLASS
9. STONE BASE
10. COLOR FINISH LOUVER
11. COLOR FINISH ROOF
12. PAINTED METAL GUARDRAIL/GRILLE
13. PAINTED METAL ROLL UP DOOR
14. S.S. SUNSCREEN
15. COPING OR SILL

GENERAL NOTES

1. A TEMPERED KNOCK OUT PANEL, IDENTIFABLE BY A YELLOW "T" SHALL BE LOCATED EVERY 50 LINEAL FT., MAX. FOR SMOKE REMOVAL.
2. SEE D4/A8.13 FOR REVEAL DIMENSIONS.

BSHA
Architecture
Planning
Interior Design
Engineering
516 Fourth Avenue
Suite 200
San Diego, California 92101
619 238-3253
FAX 619 238-8237
President:
Gordon S. Carrier, Architect
Director of Design:
Robert L. Dorfe, Jr. Architect

LICENSED ARCHITECT
MICHAEL C. JOHNSON
No. C-34337
REN. 2-31-05
STATE OF CALIFORNIA

JUSTICE CENTER
COUNTY OF SAN DIEGO
PROJECT NUMBER AQ091K

ISSUES: CONSTRUCTION SET

CONSTRUCTION SET
NOV 1 4 1994

DATE
PROJECT NO. 2621.00
DRAWN VJP
CHECKED PH
FILE NO.
F:\DRAWINGS\2621\A3.2ELEV 10/27/99 CH.BB

EAST ELEVATION

A3.2

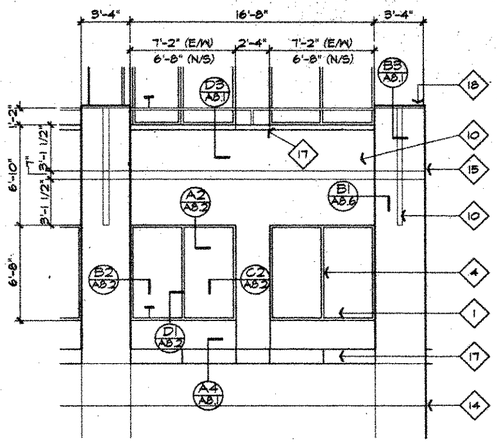

7TH FLR. ARCADE (A1)
SCALE: 1/4" = 1'-0", TYP.

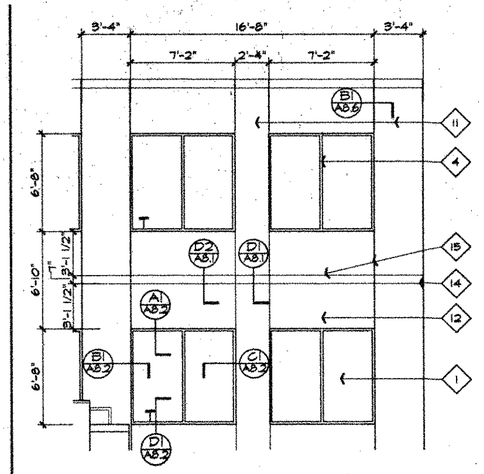

TYP. WINDOW FLRS. 8-13 (A2)

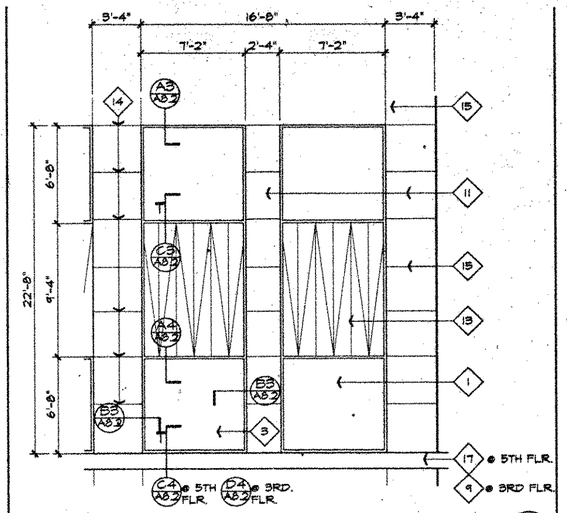

TYP. WINDOW FLRS. 3-6 (A3)

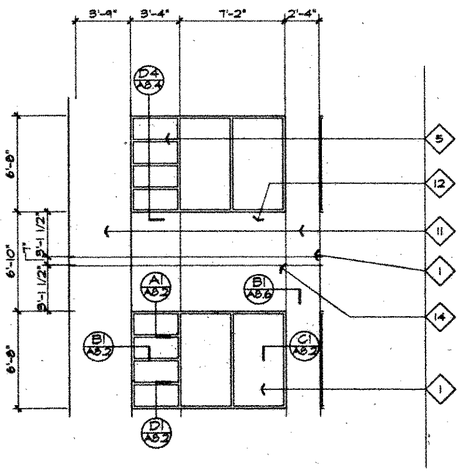

WINDOW- FLRS. 8-11 (B1)

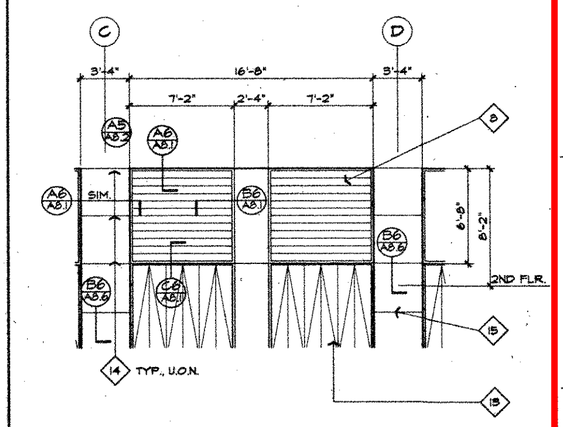

LOUVER @ 2ND FLR. (B2)

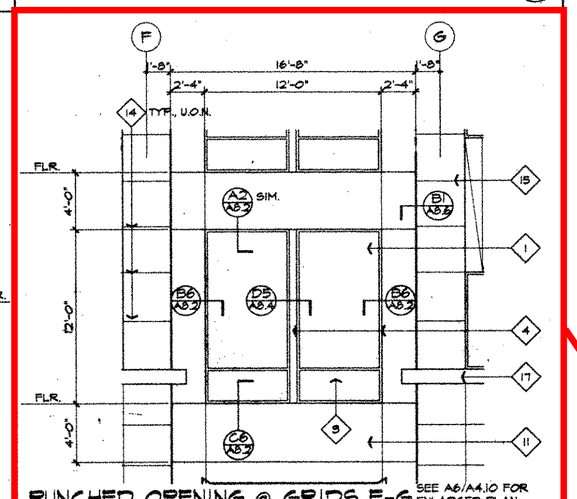

PUNCHED OPENING @ GRIDS F-G FLRS. 3, 5, 6, 7, & 8 (B3)
SEE A6/A4.10 FOR ENLARGED PLAN

DEMOLISH EXISTING BRIDGE. DEVELOPER TO PROVIDE INFILL AT EXTERIOR WALL OPENING TO MATCH EXISTING EXTERIOR SYSTEM AND MATERIALS.

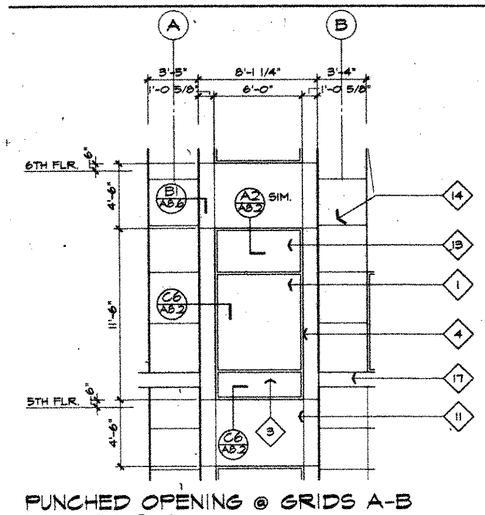

PUNCHED OPENING @ GRIDS A-B FLOORS 3-7 (C1)

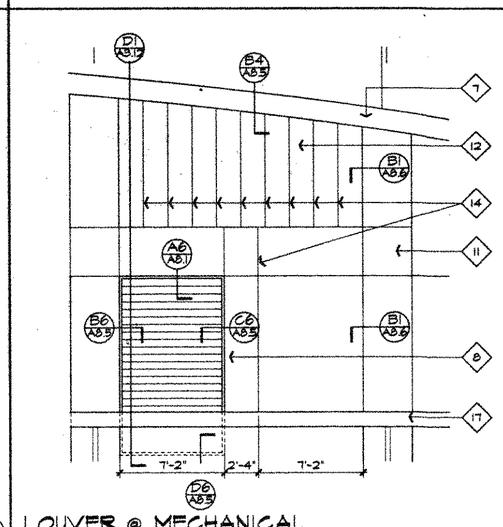

LOUVER @ MECHANICAL (C2)

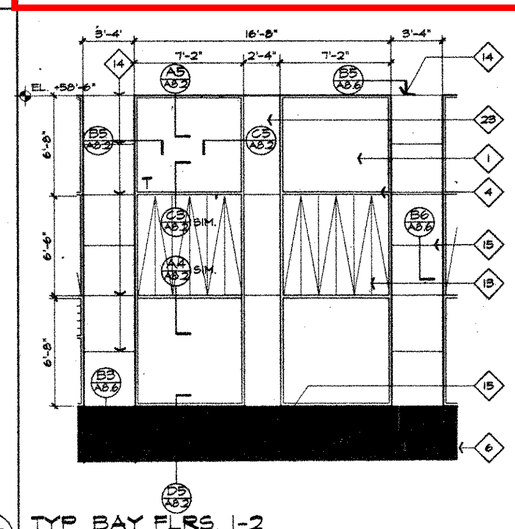

TYP. BAY FLRS. 1-2 (C3)

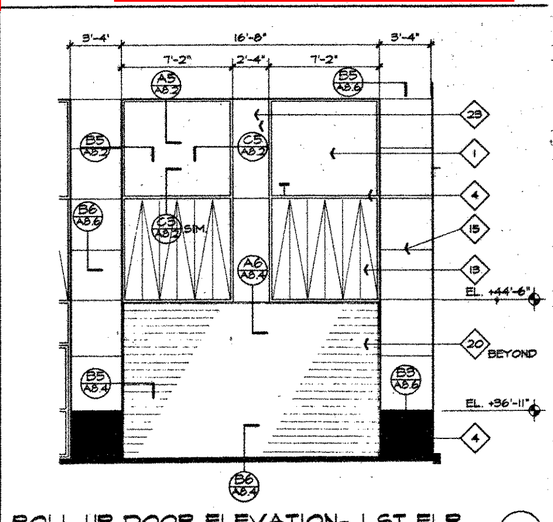

ROLL UP DOOR ELEVATION- 1 ST FLR. (C4)

KEYNOTES

1	COATED VISION GLASS- HEAT STRENGTHENED
2	COATED VISION STOREFRONT GLASS
3	COATED VISION TEMPERED GLASS
4	COLOR FINISH ALUMINUM MULLION
5	COLOR FINISH ALUMINUM MUNTIN
6	STONE BASE
7	COLOR FINISH METAL ROOF
8	COLOR FINISH LOUVER
9	GFRC COLOR A
10	STUCCO COLOR A
11	STUCCO COLOR B
12	STUCCO COLOR C
13	PATTEREND SPANDREL GLASS- HEAT STRENGTHENED
14	REVEAL- 3/4" WIDE ONE PIECE PAINTED GALV. FALSE JT.
15	3/4" WIDE EXPANSION JOINT
16	PRECAST CONCRETE
17	PRECAST CONCRETE SILL OR COPING
18	GALV. METAL COPING-PAINTED
19	2" SQ. STAINLESS STEEL FRAME
20	PAINTED METAL ROLL UP DOOR
21	1" SQ. STAINLESS STEEL PICKETS @ 4" O.C.
22	2" SQ. GALVINIZED PAINTED GUARDRAIL
23	GFRC COLOR B
24	TINTED SPANDREL GLASS
25	GFRC SILL COLOR A
26	X
27	X
28	X

ALL IDEAS, DESIGN, ARRANGEMENTS AND PLANS INDICATED OR REPRESENTED BY THIS DRAWING ARE OWNED BY, AND THE PROPERTY OF, BSHA, INC. AND WERE CREATED, EVOLVED AND DEVELOPED FOR USE ON, AND IN CONNECTION WITH THIS PROJECT. NONE OF SUCH IDEAS, DESIGN, ARRANGEMENTS OR PLANS SHALL BE USED BY, OR DISCLOSED TO ANY PERSON, FIRM, OR CORPORATION FOR ANY PURPOSE WHATSOEVER WITHOUT THE WRITTEN PERMISSION OF BSHA, INC. FILING THESE DRAWINGS OR SPECIFICATIONS WITH ANY PUBLIC AGENCY IS NOT A PUBLICATION OF SAME. NO COPYING, REPRODUCTION OR USE THEREOF IS PERMISSIBLE WITHOUT THE CONSENT OF BSHA, INC.

BSHA
Architecture
Planning
Interior Design
Engineering
913 Fourth Avenue
Suite 300
San Diego, California 92101
619 238-2353
FAX 619 238-8227
President:
Gordon E. Cartley, Architect
Director of Design:
Robert L. Berks, Jr., Architect

JUSTICE CENTER
COUNTY OF SAN DIEGO
PROJECT NUMBER: A0091K

FIRE DEPARTMENT REVIEW 11/20/08

CONSTRUCTION SET

ISSUES	
CONSTRUCTION SET	DEC 14 2007

DATE	10/15/08
PROJECT NO.	2621.00
DRAWN	V.JP
CHECKED	PM
FILE NO.	P:\DRAWINGS\2621\2621A.DWG

LARGE SCALE EAST/WEST ELEVATIONS

A3.2A

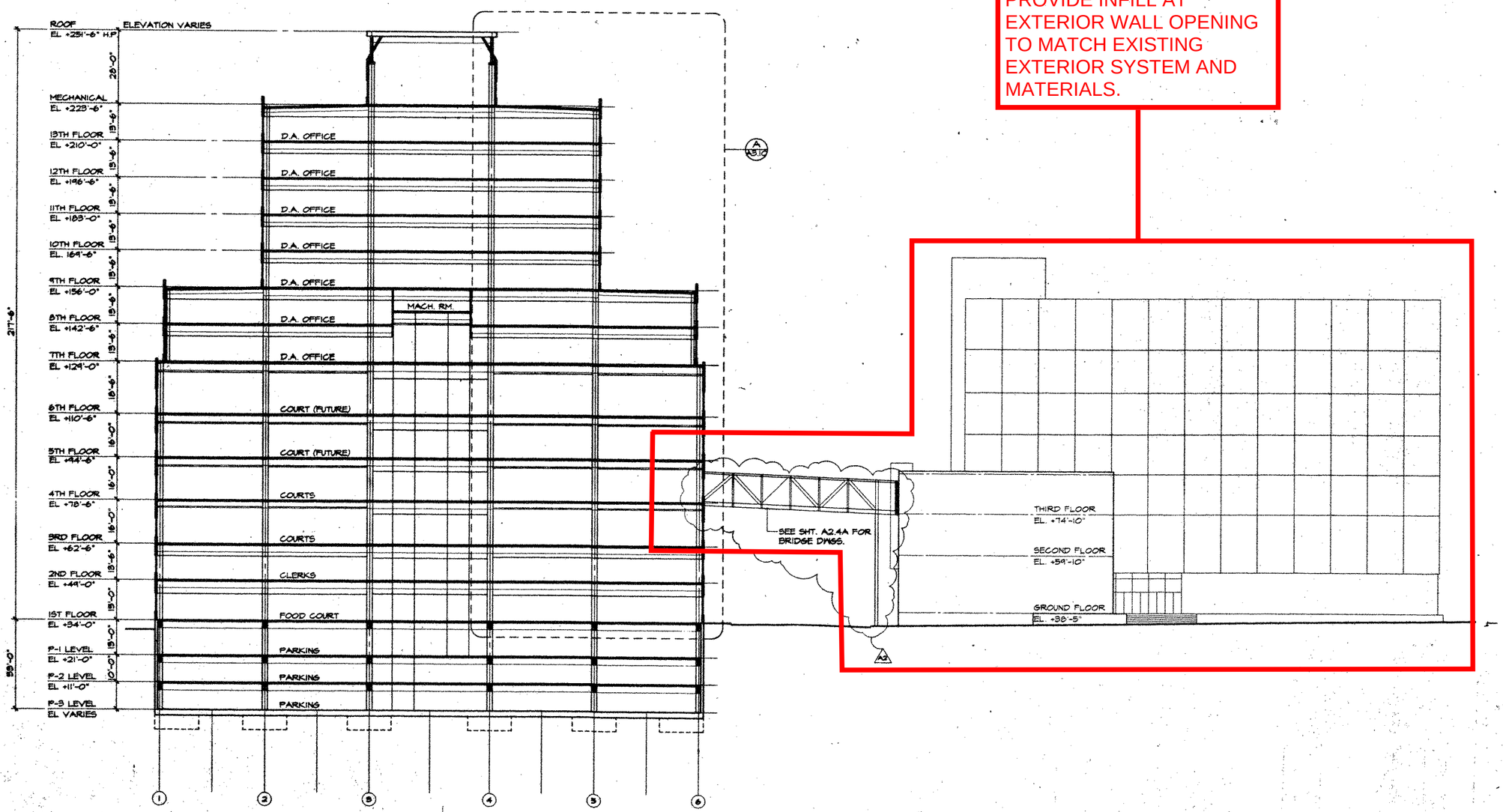

SECTION AT COURT ROOM

SCALE: 1/16" = 1'-0"

ALL IDEAS, DESIGN, ARRANGEMENTS AND PLANS INDICATED OR REPRESENTED BY THIS DRAWING ARE OWNED BY, AND THE PROPERTY OF, BSHA, INC. AND WERE CREATED, EVOLVED AND DEVELOPED FOR USE ON, AND IN CONNECTION WITH THIS PROJECT. NONE OF SUCH IDEAS, DESIGN, ARRANGEMENTS OR PLANS SHALL BE USED BY, OR DISCLOSED TO ANY PERSON, FIRM, OR CORPORATION FOR ANY PURPOSE WHATSOEVER WITHOUT THE WRITTEN PERMISSION OF BSHA, INC. FILING THOSE DRAWINGS OR SPECIFICATIONS WITH ANY PUBLIC AGENCY IS NOT A PUBLICATION OF SAME. NO COPYING, REPRODUCTION OR USE THEREOF IS PERMISSIBLE WITHOUT THE CONSENT OF BSHA, INC.

Architecture
Planning
Interior Design
Engineering
619 Fourth Avenue
Suite 200
San Diego, California 92101
619 238-2353
FAX 619 238-6227
President
Gordon E. Carter, Architect
Director of Design
Robert L. Davis, Jr., Architect

LICENSED ARCHITECT
No. C-0837
STATE OF CALIFORNIA

JUSTICE CENTER
COUNTY OF SAN DIEGO
PROJECT NUMBER A0091K

FIRE DEPARTMENT REVIEW (1/2/2004)

ISSUES: CONSTRUCTION SET

CONSTRUCTION SET

DATE
PROJECT NO. 2-6-2.00
DRAWN JHS/V.P.
CHECKED PH
FILE NO.

EAST-WEST SECTION AT COURTS

A3.6

31

ALL IDEAS, DESIGN, ARRANGEMENTS AND PLANS INDICATED OR REPRESENTED BY THIS DRAWING ARE OWNED BY, AND THE PROPERTY OF, BSHA, INC. AND WERE CREATED, EVOLVED AND DEVELOPED FOR USE ON, AND IN CONNECTION WITH THIS PROJECT. NONE OF SUCH IDEAS, DESIGN, ARRANGEMENTS OR PLANS SHALL BE USED BY, OR DISCLOSED TO ANY PERSON, FIRM, OR CORPORATION FOR ANY PURPOSE WHATSOEVER WITHOUT THE WRITTEN PERMISSION OF BSHA, INC. FILING THESE DRAWINGS OR SPECIFICATIONS WITH ANY PUBLIC AGENCY IS NOT A PUBLICATION OF SAME. NO COPYING, REPRODUCTION OR USE THEREOF IS PERMISSIBLE WITHOUT THE CONSENT OF BSHA, INC.

KEY NOTES : WALL SECTIONS

1. Natural grade.
2. Concrete sidewalk.
3. Public street.
4. 8-1/2" thick floor assembly (composite metal deck and concrete).
5. 6-1/4" thick floor assembly (composite metal deck and concrete).
6. Slab on grade.
7. Cast-In-Place concrete (C.I.P.).
8. Structural steel beam (fireproofed typical).
9. Structural steel girder (fireproofed typical).
10. Structural steel column, (fireproofed typical).
11. Raised floor area adjacent to Court Rooms.
12. Braced frame.
13. Moment frame.
14. Pedestrian bridge.
15. Floor expansion cover.
16. Expansion joint.
17. 3'-6" high rail.
18. Elastomeric topping with traffic finish.
19. Built-up roofing.
20. Roof drain.
21. Cricket.
22. 3-1/2" topping over waterproof membrane over structural slab.
23. Vision glass.
24. Spandrel glass.
25. Tempered vision glass.
26. Stucco over framing
27. Control joint.
28. Painted aluminum mullions (typical).
29. Suspended ceiling.
30. Plaster soffit.
31. Plaster column cover.
32. Pedestrian ramp.
33. Metal trim.
34. Building beyond.
35. Louvered mechanical openings.
36. Mechanical opening in steel beam (typical).
37. Steel truss construction at bridge (unprotected steel).
38. Continuous corbel.
39. Cooling tower.
40. Mechanical mezzanine.
41. Mechanical / Chiller Room.
42. Mechanical / Boiler Room.
43. Interstitial transfer corridor.
44. Secure corridor.
45. Parapet / screen wall.
46. Unprotected metal deck roof with insulation.
47. Metal railing.
48. Hydraulic elevators.
49. Electrical / SDG&E vault.
50. Reinforced masonry wall.

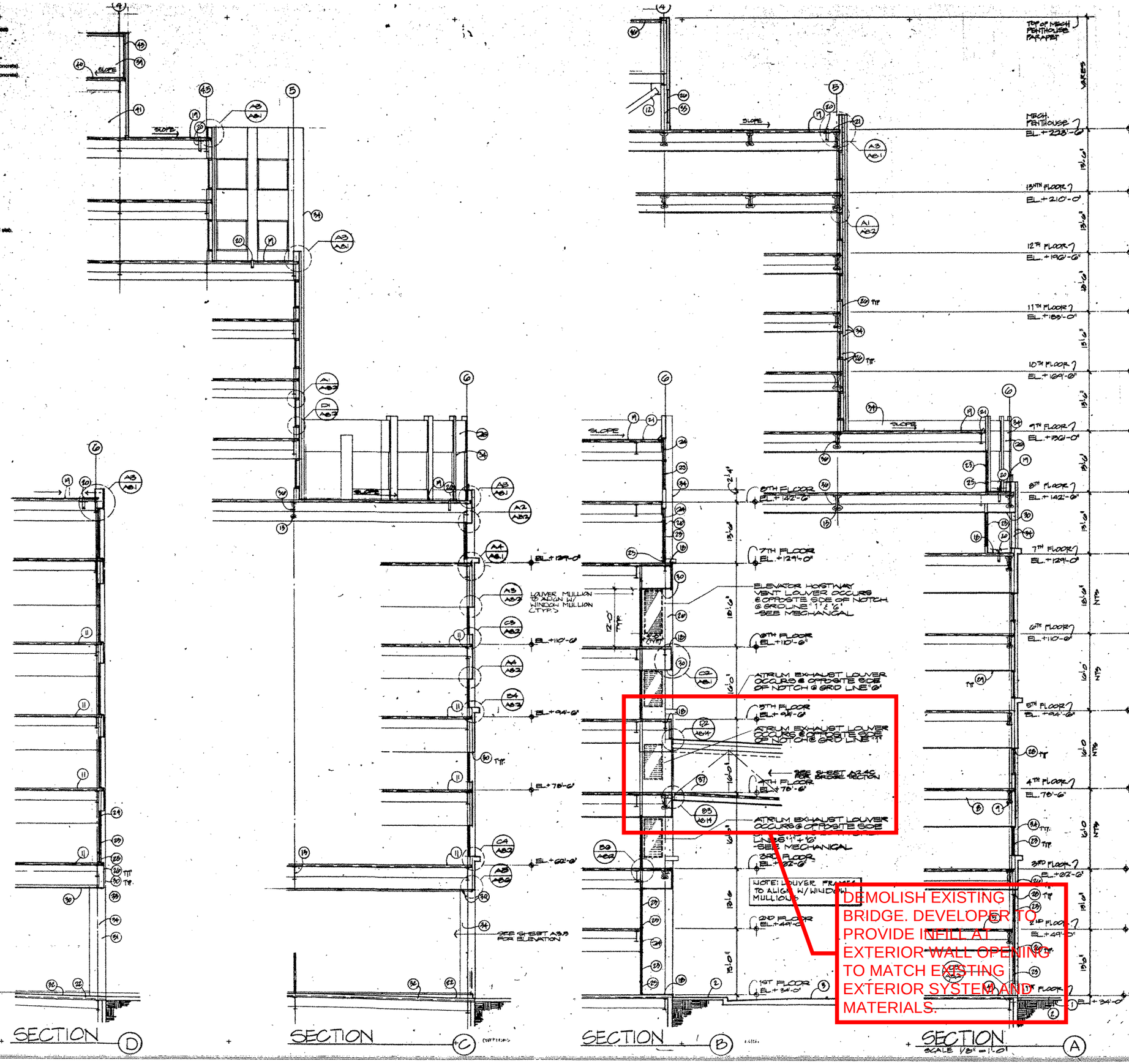

DEMOLISH EXISTING BRIDGE. DEVELOPER TO PROVIDE infill AT EXTERIOR WALL OPENING TO MATCH EXISTING EXTERIOR SYSTEM AND MATERIALS.

Architecture
Planning
Interior Design
Engineering

BSHA
510 Fourth Avenue
Suite 200
San Diego, California 92101

619 236-2353
FAX 619 236-9227

President:
Gordon R. Carter, Architect

JUSTICE CENTER
COUNTY OF SAN DIEGO
PROJECT NUMBER A0091K

CONSTRUCTION SET

A3.10

35

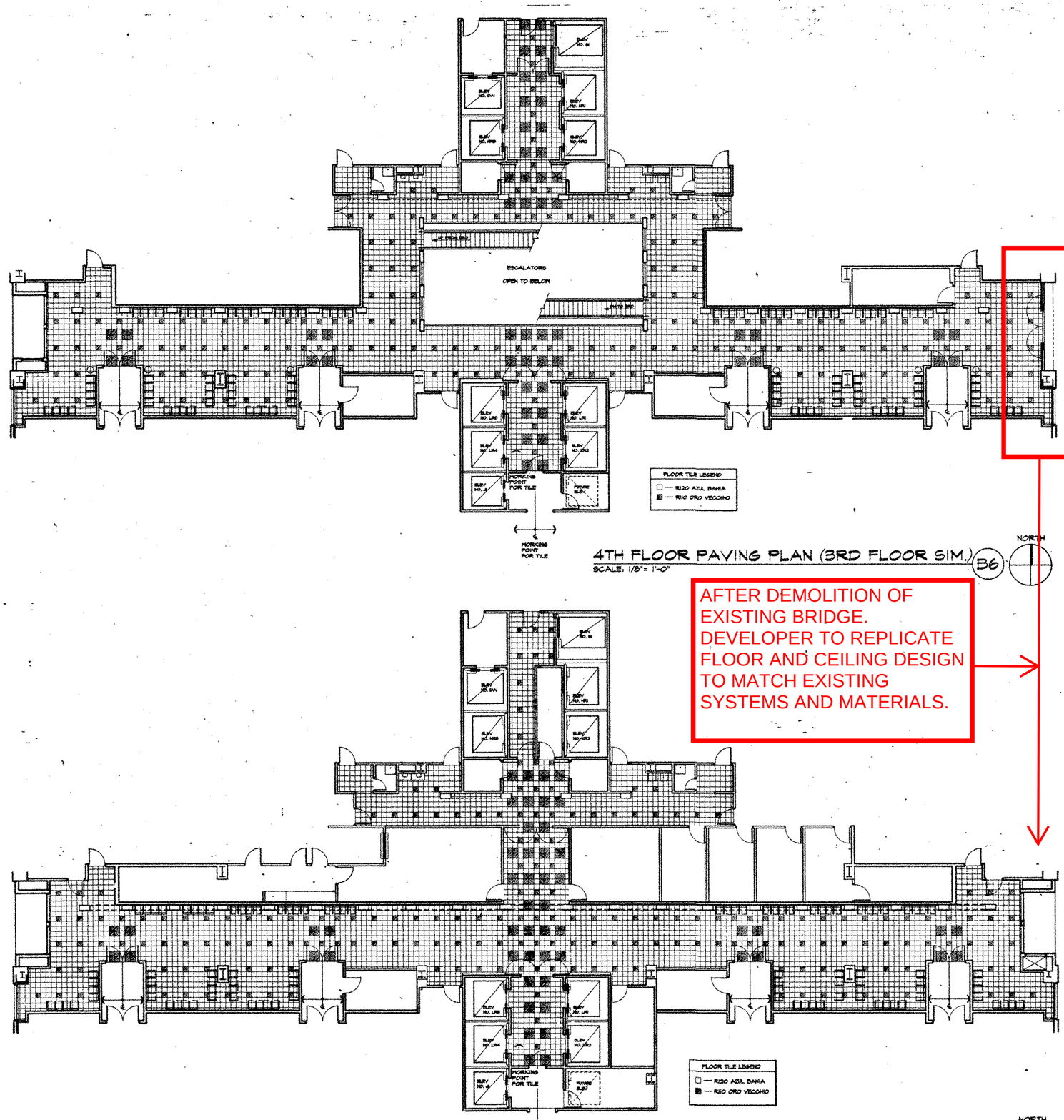

4TH FLOOR PAVING PLAN (3RD FLOOR SIM.) B6

SCALE: 1/8" = 1'-0"

NORTH

AFTER DEMOLITION OF EXISTING BRIDGE. DEVELOPER TO REPLICATE FLOOR AND CEILING DESIGN TO MATCH EXISTING SYSTEMS AND MATERIALS.

5TH FLOOR PAVING PLAN (6TH FLOOR SIM.) D4

SCALE: 1/8" = 1'-0"

NORTH

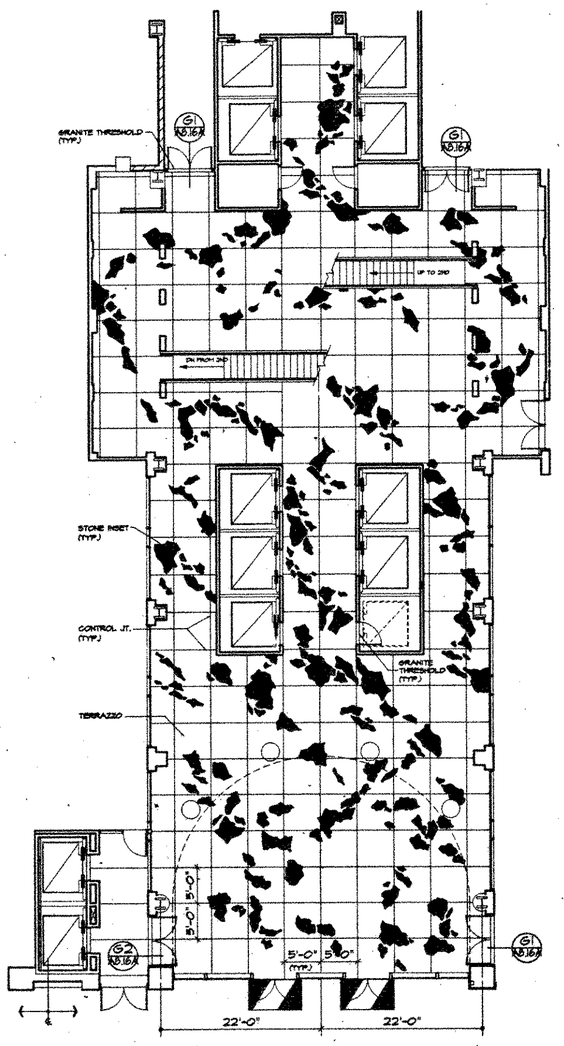

MAIN LOBBY PAVING PLAN A2

SCALE: 1/8" = 1'-0"

NORTH

ALL IDEAS, DESIGN, ARRANGEMENTS AND PLANS INDICATED OR REPRESENTED BY THIS DRAWING ARE OWNED BY, AND THE PROPERTY OF, BSHA, INC. AND WERE CREATED, EVOLVED AND DEVELOPED FOR USE ON, AND IN CONNECTION WITH THIS PROJECT. NONE OF SUCH IDEAS, DESIGN, ARRANGEMENTS OR PLANS SHALL BE USED BY, OR DISCLOSED TO ANY PERSON, FIRM, OR CORPORATION FOR ANY PURPOSE WHATSOEVER WITHOUT THE WRITTEN PERMISSION OF BSHA, INC. FILING THESE DRAWINGS OR SPECIFICATIONS WITH ANY PUBLIC AGENCY IS NOT A PUBLICATION OF SAME. NO COPYING, REPRODUCTION OR USE THEREOF IS PERMISSIBLE WITHOUT THE CONSENT OF BSHA, INC.

BSHA
Architecture
Planning
Interior Design
Engineering
510 Fourth Avenue
Suite 200
San Diego, California 92101
619 236-1353
FAX 619 236-6227
President
Gordon S. Carter, Architect
Director of Design
Robert L. Stark, Jr., Architect

LICENSED ARCHITECT
GORDON S. CARTER
No. C-84557
REGISTERED
STATE OF CALIFORNIA

JUSTICE CENTER
COUNTY OF SAN DIEGO
PROJECT NUMBER A0091K

ISSUES CONSTRUCTION SET

CONSTRUCTION SET

DATE
PROJECT NO. 2821.00
DRAWN JHG, AEK
DESIGNED PJK
FILE NO.

ENLARGED FLOOR PATTERN PLAN

A4.13

53

ALL IDEAS, DESIGN, ARRANGEMENTS AND PLANS INDICATED OR REPRESENTED BY THIS DRAWING ARE OWNED BY, AND THE PROPERTY OF, BSHA, INC. AND WERE CREATED, EVOLVED AND DEVELOPED FOR USE ON, AND IN CONNECTION WITH THIS PROJECT. NONE OF SUCH IDEAS, DESIGN, ARRANGEMENTS OR PLANS SHALL BE USED BY, OR DISCLOSED TO ANY PERSON, FIRM, OR CORPORATION FOR ANY PURPOSE WHATSOEVER WITHOUT THE WRITTEN PERMISSION OF BSHA, INC. FILING THESE DRAWINGS OR SPECIFICATIONS WITH ANY PUBLIC AGENCY IS NOT A PUBLICATION OF SAME. NO COPYING, REPRODUCTION OR USE THEREOF IS PERMISSIBLE WITHOUT THE CONSENT OF BSHA, INC.

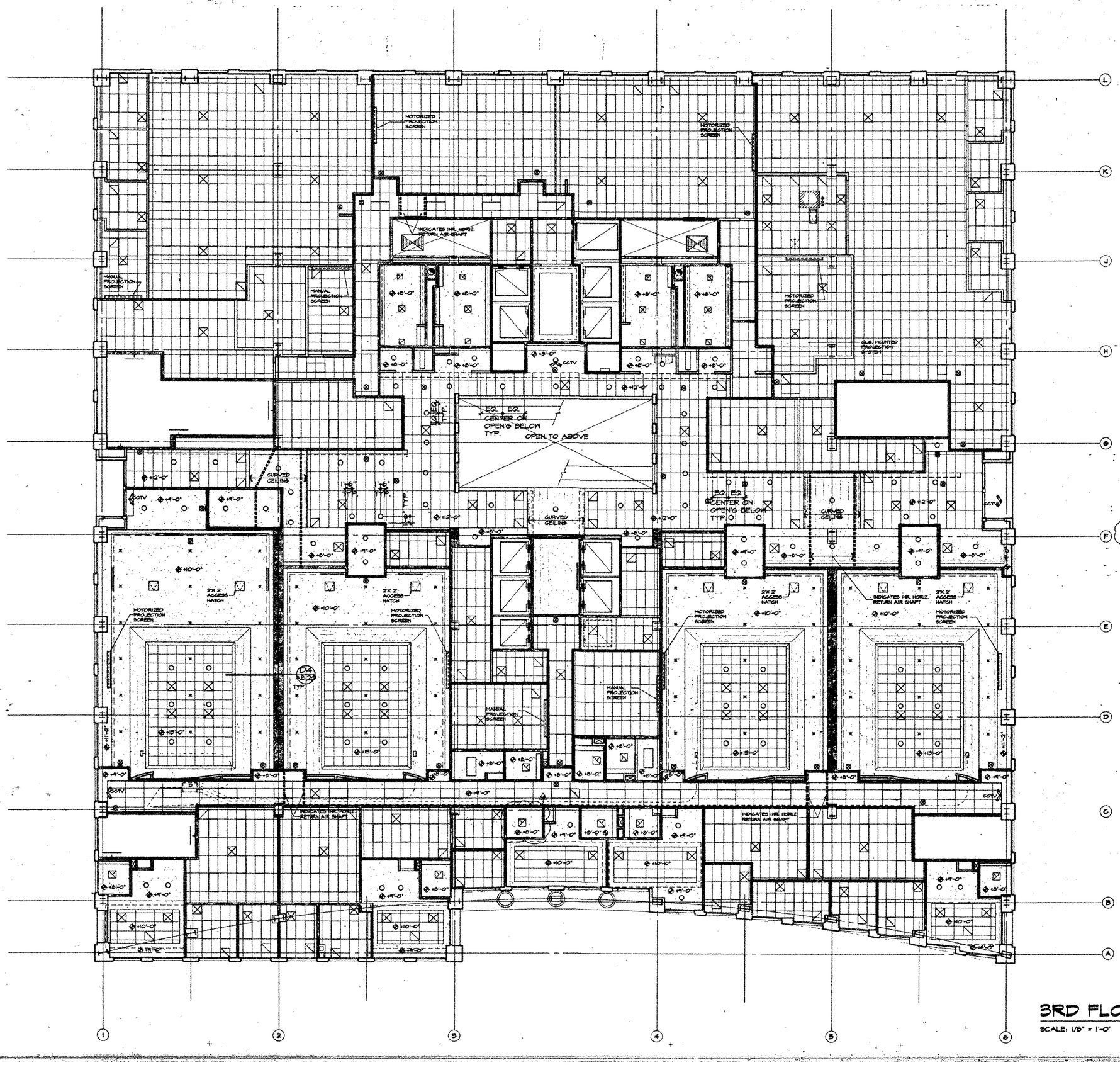

R.C.P. LEGEND

- RECESSED 2'x4' FLUORESCENT LIGHT FIXTURE
- RECESSED 2'x2' FLUORESCENT LIGHT FIXTURE
- RECESSED FLUORESCENT DOWNLIGHT
- WALL MOUNTED INCANDESCENT DOWNLIGHT
- RECESSED SPRINKLER HEAD
- HVAC SUPPLY DIFFUSER
- HVAC RETURN AIR GRILLE
- EXHAST FAN
- SURFACE MOUNTED WALL SCONCE
- CEILING MOUNTED ILLUMINATED EXIT LIGHT
- WALL MOUNTED ILLUMINATED EXIT LIGHT
- CCTV — CEILING MOUNTED C.C.T.V.
- SUSPENDED 2'x4' ACOUSTICAL CEILING TILE
- SUSPENDED 2'x2' ACOUSTICAL CEILING TILE
- GYPSUMBOARD CEILING

NOTES:

ALL CEILING HIEGHTS ARE +9'-0" ABOVE FINISH FLOOR UNLESS OTHERWISE NOTED

PNEUMATIC TUBE SYSTEM DELETED TYPICAL AT FLOORS 2, 3, 4, 5, 6

3RD FLOOR R.C.P.

SCALE: 1/8" = 1'-0"

NORTH

BSHA
Architecture
Planning
Interior Design
Engineering
919 Fourth Avenue
Suite 200
San Diego, California 92101
619 236-1353
FAX 619 236-6227
President:
Gordon T. Carter, Architect
Director of Design:
Robert L. Smith, Jr., Architect

LICENSED ARCHITECT
MICHAEL C. POWER
No. C-24337
REN 2-28-95
STATE OF CALIFORNIA

JUSTICE CENTER
COUNTY OF SAN DIEGO
PROJECT NUMBER AQ091K

ISSUE: CONSTRUCTION SET
CONSTRUCTION SET

DATE
PROJECT NO. 2621.00
DRAWN J.H.G., A.E.K.
CHECKED P.H.
FILE NO. 2621AFOB 6/14/94

THIRD FLOOR R.C.P.

A6.3

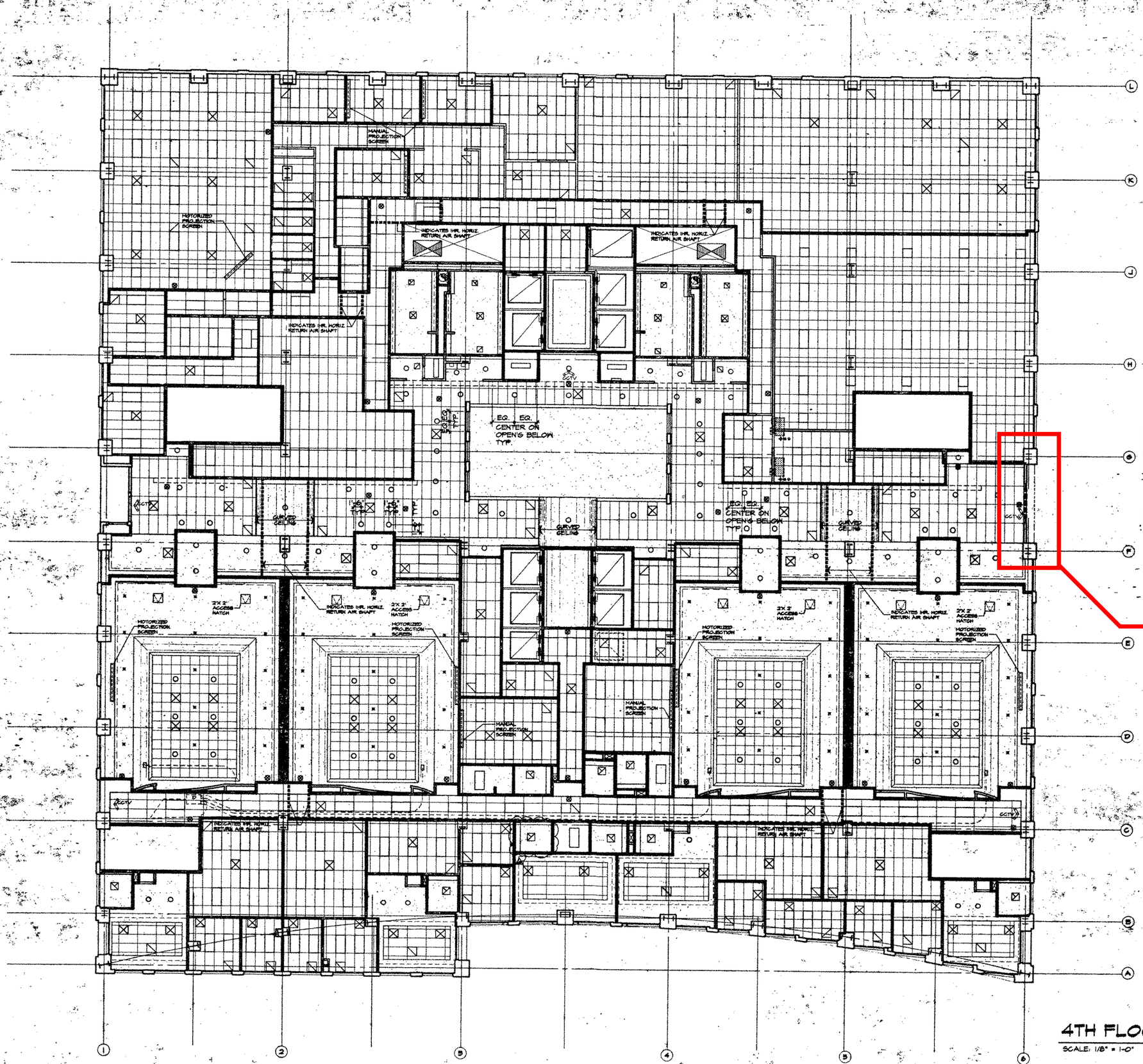

R.C.P. LEGEND

- RECESSED 2'x4' FLUORESCENT LIGHT FIXTURE
- RECESSED 2'x2 FLUORESCENT LIGHT FIXTURE
- RECESSED FLUORESCENT DOWNLIGHT
- WALL MOUNTED INCANDESCENT DOWNLIGHT
- RECESSED SPRINKLER HEAD
- HVAC SUPPLY DIFFUSER
- HVAC RETURN AIR GRILLE
- EXUAST FAN
- SURFACE MOUNTED WALL SCONCE
- CEILING MOUNTED ILLUMINATED EXIT LIGHT
- WALL MOUNTED ILLUMINATED EXIT LIGHT
- CCTV CEILING MOUNTED C.C.T.V.
- SUSPENDED 2'x4' ACOUSTICAL CEILING TILE
- SUSPENDED 2'x2' ACOUSTICAL CEILINGS TILE
- GYPSUMBOARD CEILINGS

NOTES:

SEE 3RD FLOOR REFLECTED CEILING PLAN FOR CEILING HEIGHTS ON NON-OFFICE AREAS

AFTER DEMOLITION OF EXISTING BRIDGE. DEVELOPER TO REPLICATE FLOOR AND CEILING DESIGN TO MATCH EXISTING SYSTEMS AND MATERIALS.

4TH FLOOR R.C.P.

SCALE: 1/8" = 1'-0"

NORTH

BOMA

Architecture
Planning
Interior Design
Engineering

910 Fourth Avenue
Suite 300
San Diego, California 92101

619 239-1355
FAX 619 239-6627

President:
Gordon R. Carter, Architect
Director of Design:
Robert L. Dale, Jr., Architect

LICENSED ARCHITECT
MICHAEL C. JOHNSON
No. C-24327
REGISTERED
STATE OF CALIFORNIA

JUSTICE CENTER
COUNTY OF SAN DIEGO
PROJECT NUMBER A0091K

CONSTRUCTION SET

DATE	12/14/94
PROJECT NO.	2621.00
DRAWN	J.H.G., A.E.K.
CHECKED	P.H.
FILE NO.	2621AFCA

FOURTH FLOOR R.C.P.

A6.4

ALL IDEAS, DESIGN, ARRANGEMENTS AND PLANS INDICATED OR REPRESENTED BY THIS DRAWING ARE OWNED BY, AND THE PROPERTY OF, BSHA, INC. AND WERE CREATED, EVOLVED AND DEVELOPED FOR USE ON, AND IN CONNECTION WITH THIS PROJECT. NONE OF SUCH IDEAS, DESIGN, ARRANGEMENTS OR PLANS SHALL BE USED BY, OR DISCLOSED TO ANY PERSON, FIRM, OR CORPORATION FOR ANY PURPOSE WHATSOEVER WITHOUT THE WRITTEN PERMISSION OF BSHA, INC. TO ANY OTHER PUBLIC AGENCY IS NOT A PUBLICATION OF SAME. NO COPYING, REPRODUCTION OR USE THEREOF IS PERMISSIBLE WITHOUT THE CONSENT OF BSHA, INC.

ALL IDEAS, DESIGN, ARRANGEMENTS AND PLANS INDICATED OR REPRESENTED BY THIS DRAWING ARE OWNED BY, AND THE PROPERTY OF, BSHA, INC. AND WERE CREATED, EVOLVED AND DEVELOPED FOR USE ON, AND IN CONNECTION WITH THIS PROJECT. NONE OF SUCH IDEAS, DESIGN, ARRANGEMENTS OR PLANS SHALL BE USED BY, OR DISCLOSED TO ANY PERSON, FIRM, OR CORPORATION FOR ANY PURPOSE WHATSOEVER WITHOUT THE WRITTEN PERMISSION OF BSHA, INC. FILING THESE DRAWINGS OR SPECIFICATIONS WITH ANY PUBLIC AGENCY IS NOT A PUBLICATION OF SAME. NO COPYING, REPRODUCTION OR USE THEREOF IS PERMISSIBLE WITHOUT THE CONSENT OF BSHA, INC.

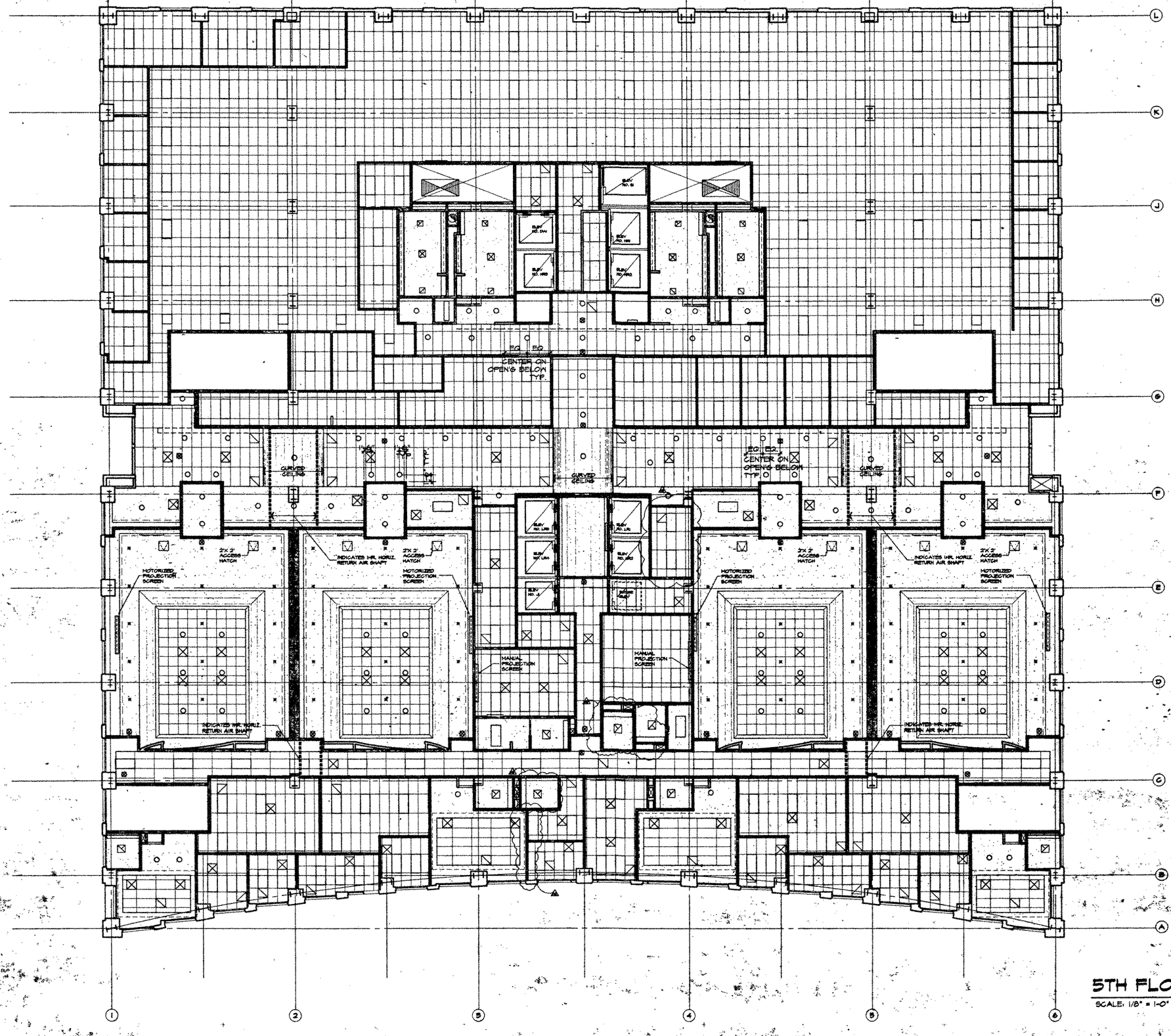

R.C.P. LEGEND

- RECESSED 2'x4' FLUORESCENT LIGHT FIXTURE
- RECESSED 2'x2' FLUORESCENT LIGHT FIXTURE
- RECESSED FLUORESCENT DOWNLIGHT
- WALL MOUNTED INCANDESCENT DOWNLIGHT
- RECESSED SPRINKLER HEAD
- HVAC SUPPLY DIFFUSER
- HVAC RETURN AIR GRILLE
- EXUAST FAN
- SURFACE MOUNTED WALL SCONCE
- CEILING MOUNTED ILLUMINATED EXIT LIGHT
- WALL MOUNTED ILLUMINATED EXIT LIGHT
- CCTV — CEILING MOUNTED C.C.T.V.
- SUSPENDED 2'x4' ACOUSTICAL CEILING TILE
- SUSPENDED 2'x2' ACOUSTICAL CEILING TILE
- GYPSUMBOARD CEILING

NOTES:

SEE 3RD FLOOR REFLECTED CEILING PLAN FOR CEILING HEIGHTS ON NON-OFFICE AREAS

Architecture
Planning
Interior Design
Engineering

610 Fourth Avenue
Suite 200
San Diego, California 92101

619 239-1355
FAX 619 239-0227

President
Gordon E. Carter, Architect
Director of Design
Robert L. Smith, Jr., Architect

LICENSED ARCHITECT
MICHAEL E. JOHNSON
No. C-24357
REN. 2-28-95
STATE OF CALIFORNIA

JUSTICE CENTER
COUNTY OF SAN DIEGO
PROJECT NUMBER A00L1K

CONSTRUCTION SET

DATE
PROJECT NO. 29.21.00
DRAWN J.H.G., P.B.L.
CHECKED P.H.
FILE NO. 29.21.00 5TH FLOOR

NORTH

FIFTH FLOOR R.C.P.

A6.5

5TH FLOOR R.C.P.

SCALE: 1/8" = 1'-0"

72

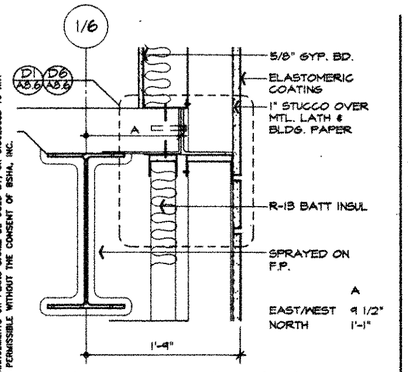

EDGE OF DECK 4 & 6 FLRS. (E, W)
EDGE OF DECK 2, 4, & 6 FLRS. (N)
SCALE: 1 1/2" = 1'-0", TYP. U.O.N.
A1

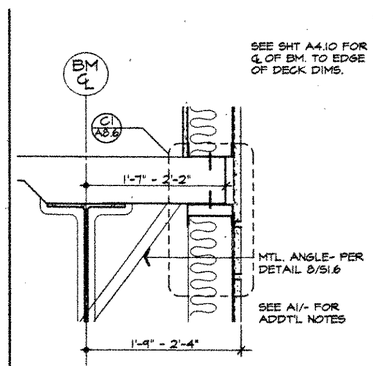

EDGE OF DECK 5 & 7 FLRS. (E, S, W)
EDGE OF DECK 3, 5, & 7 FLRS. (N)
A2

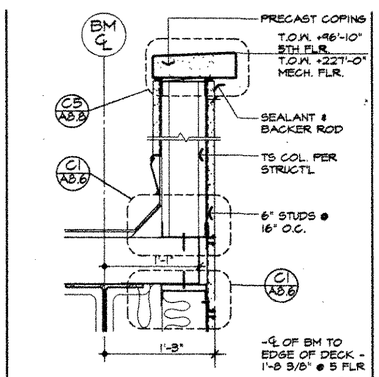

PARAPET @ 5 & MECH. FLOORS
A3

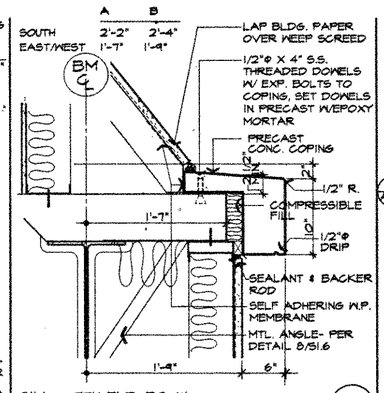

SILL @ 7TH FLR. E,S, W
SEE A1/- FOR ADDTL NOTES
A4

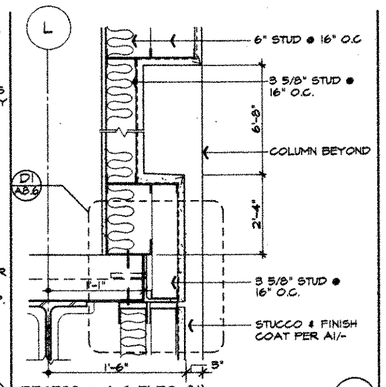

RECESS @ 4, 6 FLRS. (N)
JAMB SIM.
A5

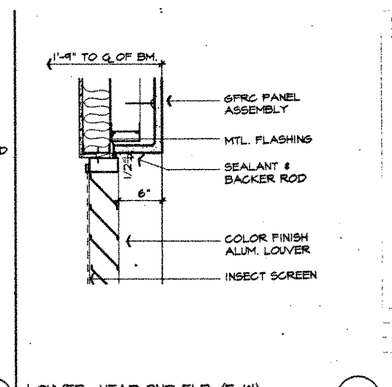

LOUVER- HEAD 2ND FLR. (E, W)
JAMB SIM.
A6

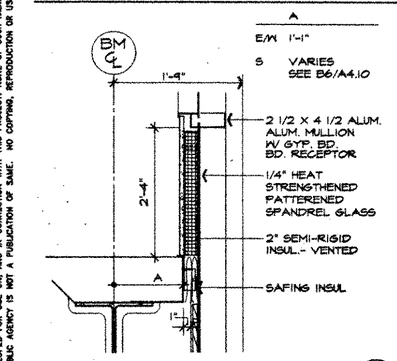

SPANDREL PANEL 2, 4, 6 FLRS. (S, E, W)
B1

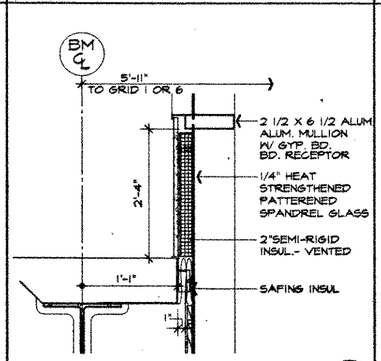

EDGE OF DECK 2 FLR. @ GRIDS F & G
B2

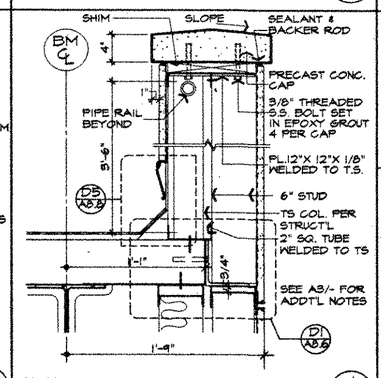

3'-4" W. COLUMNS @ 9TH FLR. PARAPET
B3

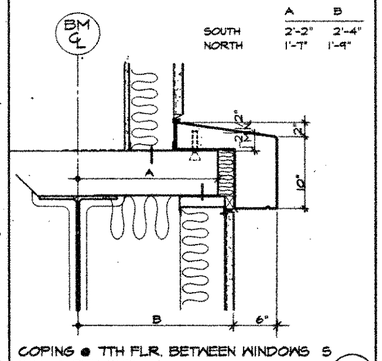

COPING @ 7TH FLR. BETWEEN WINDOWS S
SILL @ 7TH FLR. N
SEE A4/- FOR ADDTL NOTES
B4

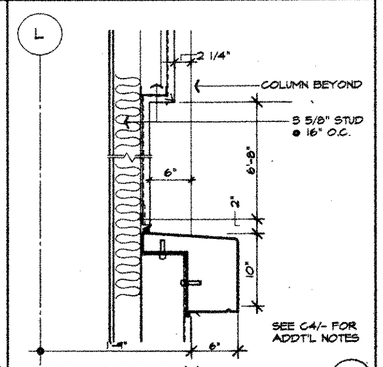

RECESS @ 3, 5 FLRS. (N)
JAMB SIM. TO HEAD
B5

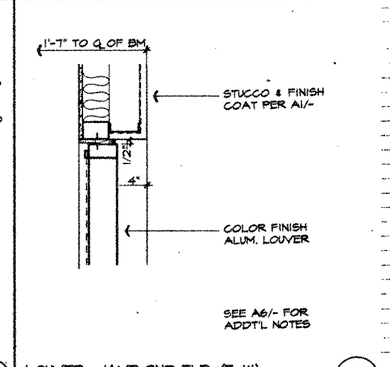

LOUVER- JAMB 2ND FLR. (E, W)
B6

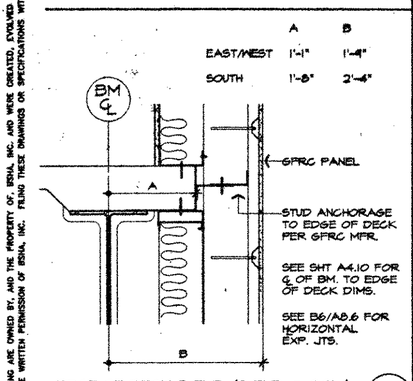

EDGE OF DECK 3 FLR. (2 FLR. @ COL.)
C1

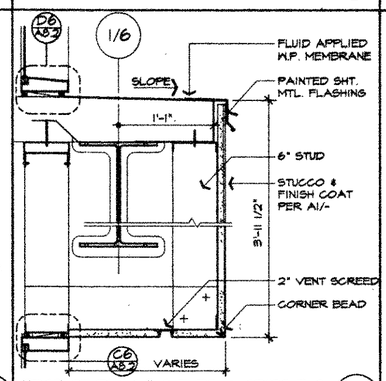

EDGE OF DECK 3-8 FLRS. @ GRIDS F-G
C2

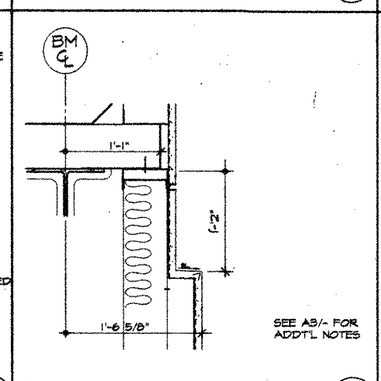

2'-4" W. COLUMNS @ 9TH FLR. PARAPET
C3

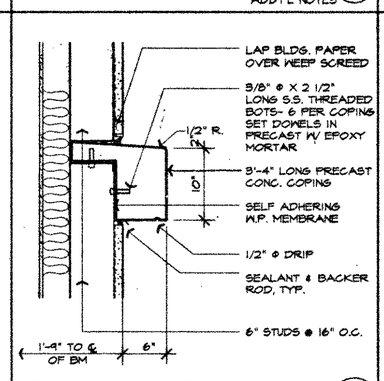

BELT COURSE @ 5TH FLR.
C4

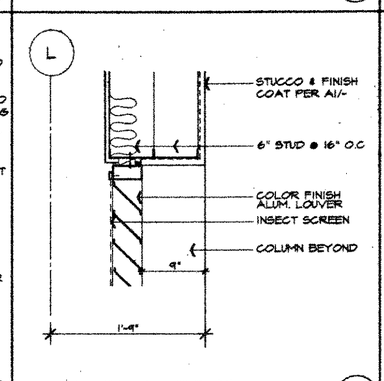

LOUVER- HEAD 6TH FLR. (N)
JAMB SIM.
C5

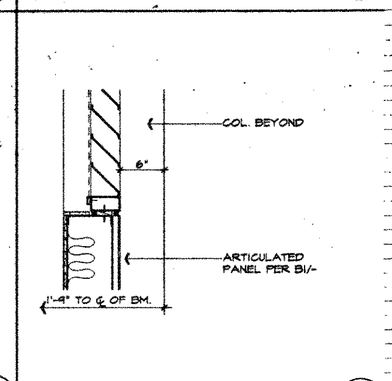

LOUVER- SILL 2ND FLR. (E, W).
C6

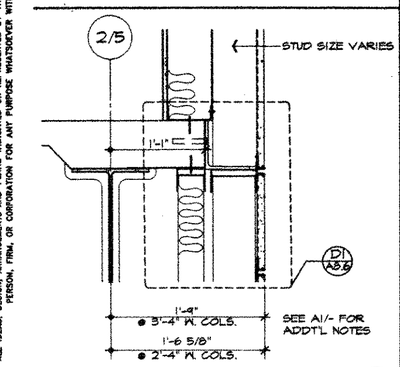

EDGE OF DECK 8-13 FLRS. (E, W)
D1

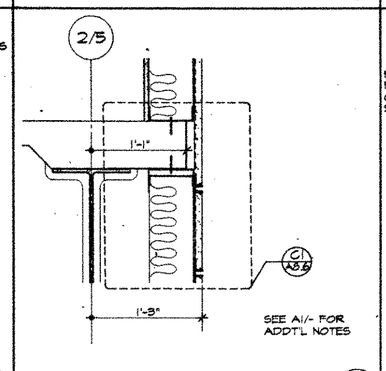

EDGE OF DECK 8-13 FLRS. (N, E, W)
D2

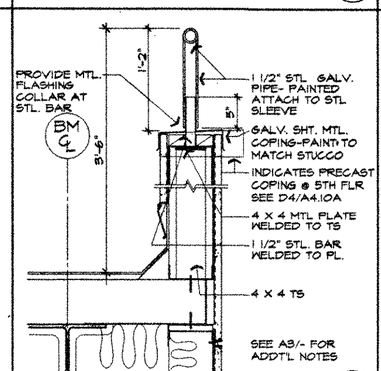

PARAPET @ 8 & 9 FLRS.
D3

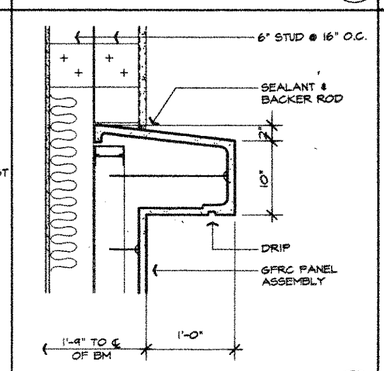

BELT COURSE @ 3RD FLR.
D4

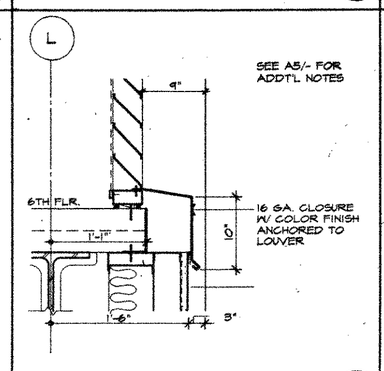

LOUVER- SILL 6TH FLR. (N)
D5

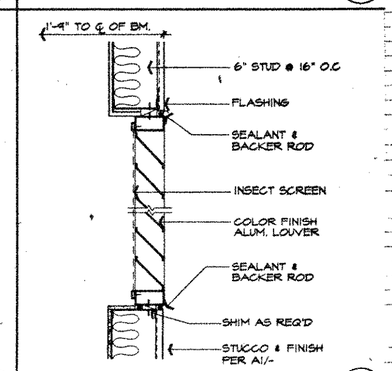

LOUVER- HEAD & SILL
JAMB SIM.
D6

ALL IDEAS, DESIGN, ARRANGEMENTS AND PLANS INDICATED OR REPRESENTED BY THIS DRAWING ARE OWNED BY, AND THE PROPERTY OF, BSHA, INC. AND WERE CREATED, EVOLVED AND DEVELOPED FOR USE ON, AND IN CONNECTION WITH THIS PROJECT. NONE OF SUCH IDEAS, DESIGN, ARRANGEMENTS OR PLANS SHALL BE USED BY, OR DISCLOSED TO ANY PERSON, FIRM, OR CORPORATION FOR ANY PURPOSE WHATSOEVER WITHOUT THE WRITTEN PERMISSION OF BSHA, INC. READ THESE DRAWINGS OR SPECIFICATIONS WITH ANY PUBLIC AGENCY IS NOT A PUBLICATION OF SAME. NO COPYING, REPRODUCTION OR USE THEREOF IS PERMISSIBLE WITHOUT THE CONSENT OF BSHA, INC.

Architecture
Planning
Interior Design
Engineering

919 Fourth Avenue
Suite 200
San Diego, California 92101

619 239-2353
FAX 619 238-6227

President:
Gordon R. Carrier, Architect
Director of Design:
Robert L. Dorlin, Jr., Architect

LICENSED ARCHITECT
GORDON R. CARRIER
No. C-24237
REN. 2-28-96
STATE OF CALIFORNIA

JUSTICE CENTER
COUNTY OF SAN DIEGO
PROJECT NUMBER AQ091K

FIRE DEPARTMENT RECEIPT 1/25/96

CONSTRUCTION SET

CONSTRUCTION SET
DATE 1-19-96

DATE
PROJECT NO. 262100
DRAWN V.J.P.
CHECKED P.H.
FILE NO. F:\PROJ\1995\262100\A8D1 08/14/95 15:24

EXTERIOR DETAILS

A8.1

STRUCTURAL STEEL, MISC'S METAL

1. STRUCTURAL STEEL SHALL BE DETAILED, FABRICATED AND ERECTED IN ACCORDANCE WITH THE AISC SPECIFICATION FOR THE DESIGN, FABRICATION AND ERECTION OF STRUCTURAL STEEL FOR BUILDINGS (LATEST EDITION AND SUPPLEMENTS).
2. ALL STRUCTURAL STEEL SHALL CONFORM TO ASTM A36 OR A572, GRADE 50 WHERE INDICATED ON DRAWINGS.
3. PIPE COLUMNS - ASTM A53, GRADE 'B'.
4. STEEL TUBES - ASTM A500, GRADE 'B' (FY - 46000 PSI).
5. BOLTS - ASTM A307, EXCEPT AS NOTED.
6. HIGH STRENGTH BOLTS - ASTM A325 SLIP CRITICAL, U. N. O.
7. ANCHOR STUDS SHALL BE NELSON GRANULAR FLUX-FILLED HEADED ANCHOR STUDS OR AN APPROVED EQUAL AND BE MADE FROM C-1015 COLD ROLLED STEEL AND SHALL CONFORM TO A.S.T.M. SPECIFICATION A-108, GRADES 1015-1020 WITH A MINIMUM TENSILE STRENGTH OF 60,000 P.S.I. STUD WELDING INSPECTING AND TESTING SHALL CONFORM TO A.W.S. D1.1-90.
8. ANCHOR BOLTS - A36; A449 WHERE INDICATED ON DRAWINGS.
9. THE STRUCTURAL STEEL FABRICATOR SHALL FURNISH SHOP DRAWINGS FOR ARCHITECT'S REVIEW BEFORE FABRICATION.
10. BOLT HOLES IN STEEL SHALL BE 1/16 INCH LARGER IN DIAMETER THAN NOMINAL SIZE OF BOLT USED, UNLESS NOTED OTHERWISE.
11. ALL WELDS SHALL BE PREQUALIFIED IN CONFORMITY WITH THE CODE FOR WELDING IN BUILDING CONSTRUCTION (AWS D1.1) OF THE AMERICAN WELDING SOCIETY. ELECTRODES TO BE E70 SERIES UNLESS NOTED OTHERWISE.
12. BUTT WELDS, COMPLETE PENETRATION OR PARTIAL PENETRATION ARE INDICATED AS C.P. OR P.P. RESPECTIVELY.
13. WELDING OF SHEET METAL AND METAL STUDS SHALL BE IN ACCORDANCE WITH U.B.C. STANDARD 27-13 AND AWS D1.3 RESPECTIVELY.
14. WELD LENGTHS CALLED FOR ON PLANS ARE THE NET EFFECTIVE LENGTH REQUIRED. WELD SIZE SHALL BE AISC MINIMUM UNLESS A LARGER SIZE IS NOTED.
15. WELDING TESTS AND INSPECTIONS - SEE SPECIFICATION.
16. CAMBER -
    A. PROVIDE UPWARD CAMBER TO ALL MEMBERS SHOWN TO HAVE CAMBER. AMOUNT MEASURED IN THE FIELD PRIOR TO ERECTION SHALL NOT DEVIATE BY MORE THAN ALLOWED BY THE AISC SPECIFICATIONS. DO NOT CAMBER MEMBERS OCCURRING BELOW ELEVATOR ENTRANCE DOORS.
    B. BEAMS DETAILED WITHOUT SPECIFIED CAMBER SHALL BE FABRICATED SO THAT AFTER ERECTION ANY MINOR CAMBER DUE TO ROLLING OR SHOP ASSEMBLY SHALL BE UPWARD. TOP OF ALL MEMBERS SHALL BE CLEARLY IDENTIFIED.
17. COMPOSITE STRUCTURAL STEEL BEAMS ARE DESIGNED IN ACCORDANCE WITH 'SPECIFICATION FOR THE DESIGN, FABRICATION AND ERECTION OF STRUCTURAL STEEL FOR BUILDINGS' OF THE AISC, NOT TO REQUIRE SHORING.
18. ALL STRUCTURAL STEEL SURFACES TO BE WELDED OR HIGH-STRENGTH BOLTED, TO BE ENCASED IN CONCRETE, TO RECEIVE SPRAY-APPLIED FIREPROOFING, OR TO BE ENCLOSED BY FINISH MATERIALS SHALL BE LEFT UNPAINTED.
19. ALL STRUCTURAL STEEL AND MISCELLANEOUS METAL EXPOSED TO WEATHER SHALL BE HOT DIP GALVANIZED AFTER FABRICATION. (FOR PEDESTRIAN BRIDGE, SEE ARCH. DWG.)
20. FRAME WELDING SEQUENCE: LONGITUDINAL SHRINKAGE STRESSES DUE TO FIELD WELDING SHALL BE MINIMIZED BY MAKING WELDED CONNECTIONS STARTING AT THE MOST CENTRAL BEAM IN THE FRAMES AND PROGRESSING TOWARDS THE EXTERIOR COLUMNS. IN THIS MANNER, THE LONGITUDINAL SHORTENING CAN PULL THE UNRESTRAINED PORTION OF THE FRAME INWARDS WITHOUT CREATING EXCESSIVE SECONDARY TENSILE FORCES. IN ADDITION, ONLY ONE END OF EACH BEAM SHALL BE ALLOWED TO COOL BEFORE WELDING THE OTHER END. WELDED WEB CONNECTION SHALL BE MADE ONLY AFTER FLANGES HAVE BEEN WELDED. FINAL WELDING SEQUENCE IS TO BE SUBMITTED FOR APPROVAL TO THE STRUCTURAL ENGINEER OF RECORD.

MASONRY (CONCRETE BLOCK)

1. CONCRETE BLOCK SHALL BE HOLLOW LOAD-BEARING CONCRETE MASONRY UNITS CONFORMING TO C90 GRADE N, NORMAL WEIGHT. USE UNITS OPEN ONE END, AND BOND BEAM UNITS AT HORIZONTAL REINFORCING.
2. CEMENT SHALL BE AS SPECIFIED FOR CONCRETE.
3. MORTAR MIX SHALL CONFORM TO REQUIREMENTS FOR TYPE S AND PROJECT SPECIFICATIONS. MORTAR SHALL ATTAIN A COMPRESSIVE STRENGTH OF 1800 PSI AT 28 DAYS. ADMIXTURE SHALL BE SIKA RED LABEL.
4. GROUT SHALL CONFORM TO REQUIREMENTS FOR COARSE GROUT. GROUT SHALL ATTAIN A COMPRESSIVE STRENGTH OF 2,000 PSI AT 28 DAYS. ADMIXTURE SHALL BE SIKA GROUT AID.
5. ADMIXTURES SHALL BE ADDED TO MORTAR OR GROUT RESPECTIVELY PER MANUFACTURER'S RECOMMENDATIONS.
6. PROVIDE A MINIMUM OF ONE BAR DIAMETER (1/2 INCH MINIMUM) GROUT BETWEEN MAIN REINFORCING AND MASONRY UNITS.
7. LOW-LIFT CONSTRUCTION; MAXIMUM GROUT POUR HEIGHT IS 4 FEET.
8. HIGH-LIFT GROUTED CONSTRUCTION MAY BE USED IN CONFORMANCE WITH CHAPTER 24 OF THE GOVERNING CODE.
9. ALL CELLS IN CONCRETE BLOCKS SHALL BE FILLED SOLID WITH GROUT, UNLESS NOTED OTHERWISE.
10. CELLS SHALL BE IN VERTICAL ALIGNMENT. DOWELS IN FOOTINGS SHALL BE SET TO ALIGN WITH CORES CONTAINING REINF'G STEEL.
11. REFER TO ARCHITECTURAL DRAWING FOR SURFACE AND HEIGHT OF UNITS, LAYING PATTERN AND JOINT TYPE.
12. ASSUMED ULTIMATE COMPRESSIVE STRENGTH OF COMPLETED MASONRY WALL IS 1500 PSI U.N.O.

CONCRETE

1. ALL PHASES OF WORK PERTAINING TO THE CONCRETE CONSTRUCTION SHALL CONFORM TO THE 'BUILDING CODE REQUIREMENTS FOR REINFORCED CONCRETE', ACI 318, WITH MODIFICATIONS AS NOTED IN THE CONTRACT DOCUMENTS.
2. SCHEDULE OF STRUCTURAL CONCRETE 28-DAY STRENGTHS & TYPES:

LOCATION IN STRUCTURE	STRENGTH PSI	TYPE
FOOTING	5000 PSI	HARDROCK
COLUMNS & WALLS	4000 PSI (U.N.O.)	HARDROCK
FILL ON METAL DECK	3000 PSI	HARDROCK/LT.WT.
ALL OTHER CONCRETE	3000 PSI	HARDROCK

3. PORTLAND CEMENT SHALL CONFORM TO ASTM C-150, TYPE I OR TYPE II, LOW ALKALI.
4. AGGREGATE FOR HARDROCK CONCRETE - C-33. EXCEPTIONS MAY BE USED ONLY WITH PERMISSION OF THE STRUCTURAL ENGINEER.
5. AGGREGATE FOR LIGHTWEIGHT CONCRETE - C-330 AND PROJECT SPECIFICATIONS.
6. FORMS FOR CONCRETE SHALL BE LAID OUT AND CONSTRUCTED TO PROVIDE THE SPECIFIED CAMBERS SHOWN ON THE DRAWINGS.
7. THE CONTRACTOR SHALL MAINTAIN A LOG OF STRUCTURAL SLAB ELEVATIONS BASED ON THE ARCHITECTURAL DRAWINGS PLUS THE ADDITION OF ANY CAMBERS INDICATED ON THE CONSTRUCTION DOCUMENTS. THIS LOG SHALL INDICATE SCREED ELEVATIONS PRIOR TO THE CONCRETE POUR, AND TOP OF CONCRETE SLAB PRIOR TO REMOVAL OF FORMS.
8. THE CONCRETE SLAB THICKNESS SHALL BE MAINTAINED UNLESS OTHERWISE SHOWN.
9. DRY PACK OR NON SHRINK GROUT UNDER BASEPLATES, SILL PLATES, ETC., SEE CONTRACT DOCUMENTS.
10. CONCRETE MIXING OPERATION, ETC., SHALL CONFORM TO C-94.
11. PLACEMENT OF CONCRETE SHALL CONFORM TO ACI 304 AND CONTRACT DOCUMENTS. SANDBLAST ALL CONCRETE SURFACES AGAINST WHICH CONCRETE IS TO BE PLACED.
12. IF COLUMNS AND WALLS ARE PLACED WITH FLOOR, TWO HOURS MUST ELAPSE BETWEEN END OF COLUMN OR WALL POUR AND BEGINNING OF FLOOR POUR.
13. THE FOLLOWING MINIMUM CONCRETE COVER SHALL BE PROVIDED FOR REINFORCEMENT PLACED IN CAST-IN-PLACE CONCRETE:
    MIN. COVER, INCHES
    A. CONCRETE CAST AGAINST AND PERMANENTLY EXPOSED TO EARTH........................3
    B. FORMED CONCRETE EXPOSED TO EARTH OR WEATHER:
        #6 THROUGH # 18 BARS......................2
        #5 BAR, W31 OR D31 WIRE, AND SMALLER....1 1/2
    C. CONCRETE NOT EXPOSED TO WEATHER NOR IN CONTACT WITH GROUND:
        SLABS, WALLS, JOISTS:
        #11 BAR AND SMALLER........................1
        BEAMS, COLUMNS AND WALL JAMBS:
        PRIMARY REINFORCEMENT, TIES, STIRRUPS, AND SPIRALS:
        #3 THROUGH #11...........................1 1/2
14. ALL REINFORCING BARS, ANCHOR BOLTS AND OTHER CONCRETE INSERTS SHALL BE WELL SECURED IN POSITION PRIOR TO PLACING CONCRETE.
15. PROVIDE SLEEVES FOR PLUMBING AND ELECTRICAL OPENINGS IN CONCRETE BEFORE PLACING. DO NOT CUT ANY REINFORCING WHICH MAY CONFLICT. CORING IN CONCRETE IS NOT PERMITTED EXCEPT AS SHOWN. NOTIFY THE STRUCTURAL ENGINEER IN ADVANCE OF CONDITIONS NOT SHOWN ON THE DRAWINGS.
16. CONDUIT OR PIPE SIZE (O.D.) SHALL NOT EXCEED ONE THIRD OF SLAB THICKNESS AND SHALL BE PLACED BETWEEN THE TOP AND BOTTOM REINFORCING, UNLESS SPECIFICALLY DETAILED OTHERWISE. CONCENTRATIONS OF CONDUITS OR PIPES SHALL BE AVOIDED EXCEPT WHERE DETAILED OPENINGS ARE PROVIDED.
17. PROJECTING CORNERS OF BEAMS, WALLS, COLUMNS, ETC., SHALL BE FORMED WITH A 3/4 INCH CHAMFER, UNLESS OTHERWISE NOTED ON ARCHITECTURAL DRAWINGS.
18. CURING COMPOUNDS USED ON CONCRETE TO RECEIVE A FINISH SHALL BE APPROVED BY THE FINISH APPLICATOR BEFORE USE.

REINFORCING STEEL

1. ALL REINFORCING STEEL SHALL BE DETAILED AND PLACED IN CONFORMANCE WITH THE 'BUILDING CODE REQUIREMENTS FOR REINFORCED CONCRETE' (ACI-318), AND THE 'MANUAL OF STANDARD PRACTICE FOR REINFORCED CONCRETE CONSTRUCTION' BY THE C.R.S.I. AND THE W.C.R.S.I., OR AS MODIFIED BY THE CONSTRUCTION DOCUMENTS.
2. REINFORCING BARS - ASTM A-615 GRADE 60 OR A-706 GRADE 60 UNLESS NOTED OTHERWISE.
3. WELDING OF REINFORCEMENT SHALL BE WITH LOW HYDROGEN ELECTRODES IN CONFORMANCE WITH 'RECOMMENDED PRACTICES FOR WELDING REINFORCING STEEL, ETC.,' AMERICAN WELDING SOCIETY, AWS-D1.4.
4. ALL REINFORCING BAR BENDS SHALL BE MADE COLD.
5. WELDED WIRE FABRIC - ASTM A-185.
6. MINIMUM LAP OF WELDED WIRE FABRIC SHALL BE 6 INCHES, OR ONE FULL MESH PLUS TWO INCHES, WHICHEVER IS GREATER.
7. REINFORCING SPLICES SHALL BE MADE AS INDICATED ON THE DRAWINGS.
8. DOWELS BETWEEN FOOTINGS AND WALLS OR COLUMNS SHALL BE THE SAME GRADE, SIZE AND SPACING AS THE VERTICAL REINFORCING, RESPECTIVELY, UNLESS NOTED OTHERWISE.
9. ALL BARS SHALL BE MARKED SO THEIR IDENTIFICATION CAN BE MADE WHEN THE FINAL IN-PLACE INSPECTION IS MADE.

SPECIAL INSPECTION

1. SPECIAL INSPECTION BY A REGISTERED DEPUTY BUILDING INSPECTOR, APPROVED BY THE DEVELOPER AND THE COUNTY OF SAN DIEGO SHALL BE REQUIRED FOR THE FOLLOWING TYPES OF WORK. SEE PROJECT SPECIFICATIONS FOR SPECIFIC REQUIREMENTS.

   SPECIAL INSPECTIONS SHALL NOT BE REQUIRED WHEN THE WORK IS DONE ON THE PREMISES OF A FABRICATOR REGISTERED AND APPROVED BY THE BUILDING OFFICIAL TO PERFORM SUCH WORK WITHOUT SPECIAL INSPECTION.

   CONCRETE
   - F'C - DESIGN GREATER THAN 2000 PSI.
   - SHOTCRETE.
   - PLACING OF REINFORCING STEEL

   WELDING
   - DUCTILE MOMENT-RESISTING STEEL FRAME.
   - STRUCTURAL STEEL OR REINFORCING.
   - STEEL DECKING.
   - SHEAR CONNECTORS.
   - ANCHOR STUDS.

   HIGH STRENGTH BOLTING
   STRUCTURAL MASONRY
   EXPANSION TYPE ANCHOR BOLTS
   COMPACTED FILL
2. EXPANSION TYPE ANCHORS SHALL BE APPROVED BY THE CHECKING AGENCY FOR THEIR USE; AND, SHALL BE INSTALLED ACCORDING TO TO THE MANUFACTURER'S RECOMMENDATIONS.
3. PROOF TESTING OF EXPANSION ANCHORS IN CONCRETE AS FOLLOWS:

   ALL EXPANSION ANCHORS (LOADED IN EITHER PULLOUT OR SHEAR) SHALL HAVE 50 PERCENT OF THE BOLTS (ALTERNATE BOLTS IN ANY GROUP ARRANGEMENT) PROOF TESTED IN TENSION. IF THERE ARE ANY FAILURES, THE ADJACENT BOLTS MUST THEN ALSO BE TESTED. ALL TESTS ARE TO BE MADE AT LEAST 24 HOURS AFTER INSTALLATION OF ANCHORS.

HARDROCK OR L'T W'T CONC.	BOLT DIAMETER			
TYPE OF TEST	3/8"	1/2"	5/8"	3/4"
DIRECT PULL TENSION (POUNDS)				
WEDGE ANCHOR	1100	2000	2300	3700
SLEEVE ANCHOR	700	900	1100	1400
NON-DRILL ANCHOR	1800	2700	3700	5400
TORQUE WRENCH (TORQUE-FT.LBS)*				
WEDGE ANCHORS	25	50	80	150
SLEEVE ANCHORS	10	20	45	90

* TEST TORQUE MUST BE REACHED WITHIN 1/2 TURN OF THE NUT TYPICALLY; 1/4 TURN OF THE NUT FOR 3/8" ANCHORS.

FOUNDATION

1. FOUNDATION DESIGN BASED ON SOIL REPORT BY THE FOLLOWING COMPANY: LAW/CRANDALL, INC. DATED 7/7/93 AND ALL SUBSEQUENT ADDENDA. COPIES ARE AVAILABLE FOR REVIEW AT THE ARCHITECT'S OFFICE.
2. FOOTING DESIGN IS BASED ON ALLOWABLE SOIL PRESSURE OF 8000 PSF. BOTTOM OF FOOTINGS TO BE A MINIMUM OF 2 FEET BELOW LOWEST ADJACENT FINISHED FLOOR OR GRADE, AND 2 FEET INTO UNDISTURBED NATURAL SOIL.
3. CONTRACTOR TO PROVIDE FOR DE-WATERING OF EXCAVATIONS FROM EITHER SURFACE WATER, GROUND WATER OR SEEPAGE.
4. CONTRACTOR SHALL PROVIDE FOR DESIGN AND INSTALLATION OF ALL CRIBBING, SHEATHING AND SHORING REQUIRED TO SAFELY RETAIN THE EARTH BANKS.
5. EXCAVATION AND COMPACTING IF REQUIRED, SHALL BE APPROVED BY THE GOVERNING AGENCY AND THE FOUNDATION ENGINEER PRIOR TO PLACING THE CONCRETE AND REINFORCING. FOUNDATION ENGINEER TO SUBMIT LETTER OF COMPLIANCE TO OWNER.
6. ALL EXCAVATIONS SHALL BE PROPERLY BACKFILLED. DO NOT PLACE BACKFILL BEHIND RETAINING WALLS BEFORE WALLS HAVE ATTAINED FULL DESIGN STRENGTH. CONTRACTOR SHALL BRACE OR PROTECT ALL BUILDING AND PIT WALLS BELOW GRADE FROM LATERAL LOADS UNTIL ATTACHING FLOORS ARE COMPLETELY IN PLACE AND HAVE ATTAINED FULL STRENGTH. CONTRACTOR SHALL PROVIDE FOR DESIGN, PERMITS AND INSTALLATION OF SUCH BRACING.
7. FOOTINGS SHALL BE PLACED AND ESTIMATED ACCORDING TO DEPTHS SHOWN ON DRAWINGS. SHOULD SOIL ENCOUNTERED AT THESE DEPTHS NOT BE APPROVED BY THE FOUNDATION ENGINEER, FOOTING ELEVATIONS WILL BE ALTERED AS REQUIRED.
8. FOOTING BACKFILL AND UTILITY TRENCH BACKFILL WITHIN BUILDING AREA SHALL BE MECHANICALLY COMPACTED IN LAYERS, IN ACCORDANCE WITH SOIL REPORT. FLOODING WILL NOT BE PERMITTED.
9. ALL ABANDONED FOOTINGS, UTILITIES, ETC., THAT INTERFERE WITH NEW CONSTRUCTION SHALL BE REMOVED.
10. NEW FOOTINGS MUST EXTEND INTO UNDISTURBED SOILS UNLESS OTHERWISE NOTED.
11. ALL EARTHWORK SHALL BE DONE IN ACCORDANCE WITH SOILS REPORT RECOMMENDATIONS.

SHOTCRETE

1. SHOTCRETING SHALL CONFORM TO ALL REQUIREMENTS OF ACI 506.2, PUBLISHED BY THE AMERICAN CONCRETE INSTITUTE; DETROIT, MICHIGAN, EXCEPT AS MODIFIED BY THE REQUIREMENTS OF THE CONTRACT DOCUMENTS.
2. DEFINITIONS:
   * SHOTCRETE IS MORTAR OR CONCRETE PNEUMATICALLY PROJECTED AT A HIGH VELOCITY ONTO A SURFACE.
   * WET MIX SHOTCRETE IS SHOTCRETE IN WHICH ALL OF THE INGREDIENTS INCLUDING WATER ARE MIXED BEFORE INTRODUCTION INTO THE PLACING EQUIPMENT.
   * DRY MIXED SHOTCRETE DESIGNATES A MIXTURE OF PORTLAND CEMENT AND SAND - MIXED DRY, PASSED THROUGH A CEMENT GUN AND CONVEYED BY AIR THROUGH A FLEXIBLE HOSE, HYDRATED AT A NOZZLE ON THE END OF SUCH FLEXIBLE HOSE, AND DEPOSITED BY AIR PRESSURE IN ITS PLACE OF FINAL REPOSE.
3. MATERIALS:
   CEMENT: ASTM C150 TYPE II, LOW ALKAI, NO FLY ASH.
   AGGREGATE: ACI 506. GRADATION NO. 1 OR NO. 2, C33.
   WATER: POTABLE, FRESH.
4. SHOTCRETE CONTRACTOR MUST SHOW A MINIMUM OF 5 YEARS EXPERIENCE ON BUILDING PROJECTS AND MUST BE APPROVED BY THE ARCHITECT.

GENERAL

1. THE PROJECT SPECIFICATIONS FORM A PART OF THESE GENERAL NOTES.
2. THE CONTRACTOR SHALL VERIFY ALL DIMENSIONS PRIOR TO CONSTRUCTION. THE ARCHITECT SHALL BE NOTIFIED OF ANY DISCREPANCIES OR INCONSISTENCIES.
3. DIMENSIONS SHALL TAKE PRECEDENCE OVER SCALED DRAWINGS.
4. NOTES AND DETAILS ON DRAWINGS SHALL TAKE PRECEDENCE OVER GENERAL NOTES AND TYPICAL DETAILS. WHERE NOTES AND DETAILS ON DRAWINGS AND THESE GENERAL NOTES AND TYPICAL DETAILS ARE IN CONFLICT WITH THE PROJECT SPECIFICATIONS, THE MOST STRINGENT SHALL APPLY. CONDITIONS NOT SPECIFICALLY SHOWN SHALL BE CONSTRUCTED AS SHOWN FOR SIMILAR WORK.
5. ALL WORK SHALL CONFORM TO THE STANDARDS OF THE FOLLOWING CODE:

   UNIFORM BUILDING CODE, 1991 EDITION
   TITLE 24, PART 1 AND PART 2, CALIFORNIA BUILDING CODE AND ANY OTHER REGULATING AGENCIES WHICH HAVE AUTHORITY OVER ANY PORTION OF THE WORK, INCLUDING THE STATE OF CALIFORNIA DIVISION OF INDUSTRIAL SAFETY, AND THOSE CODES AND STANDARDS LISTED IN THE CONTRACT DOCUMENTS.
6. MANUFACTURED MATERIALS SHALL BE APPROVED BY THE CHECKING AGENCY PRIOR TO THEIR USE. ALL REQUIREMENTS OF THOSE APPROVALS SHALL BE FOLLOWED.
7. SEE ARCHITECTURAL DRAWINGS FOR THE FOLLOWING:
   A. SIZE AND LOCATION OF ALL DOOR AND WINDOW OPENINGS.
   B. SIZE AND LOCATION OF ALL NON-BEARING PARTITIONS.
   C. SIZE AND LOCATION OF ALL CONCRETE CURBS, FLOOR DRAINS, SLOPES, DEPRESSED AREAS, CHANGES IN LEVEL, CHAMFERS, GROOVES, INSERTS, ETC.
   D. SIZE AND LOCATION OF ALL FLOOR AND ROOF OPENINGS.
   E. STAIR FRAMING AND DETAILS.
   F. DIMENSIONS NOT SHOWN ON STRUCTURAL DRAWINGS.
8. SEE MECHANICAL, PLUMBING AND ELECTRICAL DRAWINGS FOR:
   A. PIPE RUNS, SLEEVES, HANGERS, TRENCHES, WALL, ROOF AND FLOOR OPENINGS, ETC., NOT SHOWN OR NOTED.
   B. ELECTRICAL CONDUIT RUNS, BOXES, OUTLETS IN WALLS AND SLABS.
   C. ANCHORAGE AND BRACING FOR ELECTRICAL, MECHANICAL OR PLUMBING EQUIPMENT TO THE STRUCTURE.
   D. ANCHOR BOLTS FOR MOTOR MOUNTS.
   E. SIZE, WEIGHT AND LOCATION OF MACHINE AND EQUIPMENT BASES.
9. MECHANICAL AND ELECTRICAL LOADS MAY BE SUPPORTED FROM BEAMS. LIGHT MECHANICAL AND ELECTRICAL LOADS ANCHORED INTO METAL DECK ASSEMBLY MUST BE ANCHORED INTO STRUCTURAL CONCRETE ABOVE. SEE STEEL DECKING NOTES IF NO CONCRETE IS USED. STAIR FRAMINGS — NOT SPECIFICALLY DETAILED ON THE STRUCTURAL OR ARCHITECTURAL DRAWINGS, SHALL BE DESIGN-BUILT BY THE CONTRACTOR AND MAY BE SUPPORTED BY THE PRIMARY STRUCTURE. CONTRACTOR SHALL PROVIDE AND INSTALL ALL ANCILLARY MEMBERS, INCLUDING BUT NOT LIMITED TO BEAMS, COLUMNS POSTS, FOOTINGS, STIFFENERS, GUSSETS, KICKERS, BRACES, ETC. AND THE ATTENDANT CONNECTIONS, AS REQUIRED BY THE BUILDING STRUCTURAL ENGINEER, TO SUPPORT LOADS IMPOSED BY THE STAIR FRAMING ON THE PRIMARY STRUCTURE. STAIR FRAMING SHALL BE DESIGNED TO NOT TO IMPOSE ANY TORSIONAL LOADS ON THE PRIMARY STRUCTURE. SPECIAL STAIR FRAMING SHOWN ON THE STRUCTURAL DRAWINGS SHALL BE STRICTLY ADHERED TO BY THE CONTRACTOR.
10. THE CONTRACT DOCUMENTS REPRESENT THE FINISHED STRUCTURE. THEY DO NOT INDICATE THE METHOD OF CONSTRUCTION. THE CONTRACTOR SHALL PROVIDE ALL MEASURES NECESSARY TO PROTECT THE STRUCTURE DURING CONSTRUCTION. SUCH MEASURES SHALL INCLUDE, BUT NOT BE LIMITED TO, BRACING, SHORING FOR LOADS DUE TO CONSTRUCTION EQUIPMENT, ETC. OBSERVATION VISITS TO THE SITE BY THE STRUCTURAL ENGINEER SHALL NOT INCLUDE INSPECTION OF THE ABOVE ITEMS.
11. OPENINGS, POCKETS, ETC. SHALL NOT BE PLACED IN STRUCTURAL MEMBERS UNLESS SPECIFICALLY DETAILED ON THE STRUCTURAL DRAWINGS. NOTIFY THE STRUCTURAL ENGINEER WHEN DRAWINGS BY OTHERS SHOW OPENINGS, POCKETS, ETC., LARGER THAN 6 INCHES NOT SHOWN ON THE STRUCTURAL DRAWINGS, BUT WHICH ARE LOCATED IN STRUCTURAL MEMBERS.
12. SPECIFICATIONS, CODES AND STANDARDS NOTED IN THE CONTRACT DOCUMENTS SHALL BE OF THE LATEST APPROVED ISSUE, INCLUDING SUPPLEMENTS, UNLESS OTHERWISE NOTED. MATERIAL SPECIFICATIONS ARE ASTM LATEST EDITION.
13. THE CONTRACTOR SHALL INVESTIGATE SITE FOR FILLED EXCAVATIONS OR BURIED STRUCTURES SUCH AS CESSPOOLS, CISTERNS, FOUNDATIONS, ETC. IF ANY SUCH STRUCTURES ARE FOUND, ARCHITECT SHALL BE NOTIFIED IMMEDIATELY.
14. CONSTRUCTION MATERIALS SHALL BE SPREAD OUT IF PLACED ON FRAMED FLOORS OR ROOFS. LOAD SHALL NOT EXCEED THE DESIGN LIVE LOAD PER SQUARE FOOT. PROVIDE ADEQUATE SHORING AND/OR BRACING WHERE STRUCTURE HAS NOT ATTAINED DESIGN STRENGTH OR WHERE OVERLOAD IS ANTICIPATED.
15. DESIGN LIVE LOADS:

AREA	DESIGN LIVE LOAD	REMARKS
FIRST FLOOR, U.N.O.	100 PSF	UNREDUCED
1ST FL. PARKING (EXTERIOR)	250 PSF	UNREDUCED
1ST FL. LOADING & TRASH DOCK	250 PSF	UNREDUCED
2ND TO 13TH FLOORS	80+20 PSF PARTITION	REDUCIBLE
CORRIDORS, STAIRS	100 PSF	REDUCIBLE
ROOF	20 PSF	REDUCIBLE
MECHANICAL PENTHOUSE	125 PSF OR EQUIP'T WT	UNREDUCED
ELEVATOR MACHINE ROOM	125 PSF (OR EQUIP.WEIGHT+20 PSF)	

16. THE LATERAL SYSTEM OF THE STRUCTURE IS DESIGNED WITH LATERAL RESTRAINT AT THE GROUND FLOOR. STRUCTURAL FRAMES ARE NOT LATERALLY SELF SUPPORTING UNTIL THE ENTIRE DESIGN LATERAL RESTRAINT FLOOR AND STRUCTURAL WALLS BELOW ARE IN PLACE.
17. CODE LEVEL DESIGN LATERAL LOAD CRITERIA
    WIND: 70 MPH, EXPOSURE = C, I = 1.0
    SEISMIC: ZONE = 3, SITE SOIL TYPE = 1.2, I = 1.0, Rw = 12

DEMOLITION

1. ALL DEMOLITION SHALL BE CARRIED ON IN SUCH A WAY AS NOT TO DAMAGE EXISTING ELEMENTS WHICH ARE TO BE IN THE FINISHED BUILDING.
2. ALL ELEMENTS OF THE STRUCTURE WHICH ARE TO REMAIN AND WHICH ARE DAMAGED DURING DEMOLITION WORK SHALL BE REPLACED AT NO ADDED COST. EXISTING ELEMENTS TO BE PROTECTED TO THE FULLEST EXTENT POSSIBLE TO REDUCE SUCH DAMAGE TO A MINIMUM.

ALL IDEAS, DESIGN, ARRANGEMENTS AND PLANS INDICATED OR REPRESENTED BY THIS DRAWING ARE OWNED BY, AND THE PROPERTY OF, BSHA, INC. AND WERE CREATED, EVOLVED AND DEVELOPED FOR USE ON, AND IN CONNECTION WITH THIS PROJECT. NONE OF SUCH IDEAS, DESIGN, ARRANGEMENTS OR PLANS SHALL BE USED BY, OR DISCLOSED TO ANY PERSON, FIRM, OR CORPORATION FOR ANY PURPOSE WHATSOEVER WITHOUT THE WRITTEN PERMISSION OF BSHA, INC. FILING THESE DRAWINGS OR SPECIFICATIONS WITH ANY PUBLIC AGENCY IS NOT A PUBLICATION OF SAME. NO COPYING, REPRODUCTION OR USE THEREOF IS PERMISSIBLE WITHOUT THE CONSENT OF BSHA, INC.

JUSTICE CENTER
COUNTY OF SAN DIEGO

CONSTRUCTION SET

GENERAL NOTES

ALL IDEAS, DESIGN, ARRANGEMENTS AND PLANS INDICATED OR REPRESENTED BY THIS DRAWING ARE OWNED BY, AND THE PROPERTY OF, BSHA, INC. AND WERE CREATED, EVOLVED AND DEVELOPED FOR USE ON, AND IN CONNECTION WITH THIS PROJECT. NONE OF SUCH IDEAS, DESIGN, ARRANGEMENTS OR PLANS SHALL BE USED BY, OR DISCLOSED TO ANY PERSON, FIRM, OR CORPORATION FOR ANY PURPOSE WHATSOEVER WITHOUT THE WRITTEN PERMISSION OF BSHA, INC. FILING THESE DRAWINGS OR SPECIFICATIONS WITH ANY PUBLIC AGENCY IS NOT A PUBLICATION OF SAME. NO COPYING, REPRODUCTION OR USE THEREOF IS PERMISSIBLE WITHOUT THE CONSENT OF BSHA, INC.

WELDING OF REINF. BARS (CONT.)

AFTER COMPLETION OF WELDING, THE REINFORCING STEEL SHALL BE ALLOWED TO COOL NATURALLY IN STILL AIR TO AMBIENT TEMPERATURE. ACCELERATED COOLING IS PROHIBITED. JOINTS ARE TO BE PROTECTED FROM DRAFTS DURING THE COOLING PROCESS.

TABLE I - MINIMUM PREHEAT AND INTERPASS TEMPERATURES

CARBON EQUIVALENT RANGE, %	SIZE OF REINFORCING BAR	MINIMUM PREHEAT AND INTERPASS TEMPERATURE F	C
0.40 MAX.	UP TO 18 INCLUSIVE	50	10
0.41 - 0.45 INCLUSIVE	UP TO 11 INCLUSIVE	50	10
	14 AND 18	100	38
0.46 - 0.55 INCLUSIVE	UP TO 11 INCLUSIVE	50	10
	14 AND 18	200	93
0.56 - 0.65 INCLUSIVE	UP TO 6 INCLUSIVE	100	38
	7 TO 11 INCLUSIVE	200	93
	14 AND 18	300	149
0.66 - 0.75	UP TO 6 INCLUSIVE	300	149
	7 TO 10 INCLUSIVE	400	204

* SHIELDED METAL ARE WELDING WITH LOW HYDROGEN ELECTRODES, GAS METAL ARC WELDING, OR FLUX CORED ARC WELDING, SEE AWS D1.4-79.

STEEL DECKING

1. THE STEEL DECKING SHALL BE OF TYPE AND GAUGE AS CALLED FOR ON DRAWINGS. DECKING AND ALL ACCESSORIES SHALL BE FORMED FROM STEEL SHEETS HAVING A MINIMUM YIELD STRENGTH OF 33,000 PSI AND CONFORMING TO A-446. THE STEEL SHALL BE ZINK-COATED CONFORMING TO A525, CLASS G60. DECK UNITS SHALL BE CONTINUOUS OVER THREE OR MORE SPANS WHERE POSSIBLE.
2. MINIMUM BEARING OF DECKING ON SUPPORTS SHALL BE 2 INCHES. SHEETS SHALL BE ATTACHED TO ALL SUPPORTING STEEL MEMBERS BY WELDING AS INDICATED ON DRAWINGS AND IN ACCORDANCE WITH MANUFACTURER'S RECOMMENDATIONS. UPON COMPLETION OF ERECTION, ALL WELDS IN EXPOSED DECK AREAS SHALL HAVE TOUCH-UP, DE-SLAG, CLEAN AND PRIME WITH A ZINC RICH PRIMER. DECK WELDING SHALL BE NOTED ON PLANS. WHERE NO WELDING IS NOTED, THE SIDE LAP OF EACH PANEL SHALL BE FASTENED BY 1 INCH LONG FILLET WELDS OR APPROVED FUSION WELDS AT 3 FEET ON CENTER MAXIMUM, OR BUTTON PUNCHED AT 18 INCHES ON CENTER. (B.P. AT 12" O.C. FOR 1½" HSB-36 STL DECKS)
3. SEE DRAWINGS FOR DETAIL OF DECK OPENINGS. SEE ARCHITECTURAL, MECHANICAL, ELECTRICAL DRAWINGS, ETC., FOR SIZE AND LOCATION OF REQUIRED OPENINGS.
4. SHEAR CONNECTORS SHALL BE NELSON GRANULAR FLUX-FILLED HEADED ANCHOR STUDS OR AN APPROVED EQUAL, SHALL BE MADE FROM COLD FINISHED LOW CARBON STEEL, AND SHALL CONFORM TO A-108, GRADES 1015 - 1020 WITH A MINIMUM TENSILE STRENGTH OF 60,000 PSI. STUD WELDING INSPECTING AND TESTING SHALL CONFORM TO AWS D1.1.
5. DEFORMED BAR ANCHOR STUDS SHALL BE NELSON D2L GRANULAR FLUX-FILLED REBAR STUDS OR APPROVED EQUAL, AND SHALL BE MADE OF LOW CARBON COLD ROLLED STEEL WITH A MINIMUM TENSILE STRENGTH OF 80,000 PSI. STUD WELDING INSPECTING AND TESTING SHALL CONFORM TO AWS D1.1.
6. HANGERS SUPPORTED BY METAL DECKING ONLY OR METAL DECKING WITH INSULATING FILL SHALL BE ATTACHED TO STEEL BARS, 3/8" ROUND X 12" OR 1/8" X 1 1/2" X 12" FLAT, PLACED PERPENDICULAR TO FLUTES. ONLY LIGHT DUCTWORK (12" X 16" MAX.), PIPING (1 1/2" ROUND PIPING MAX), OR CEILINGS MAY BE HUNG FROM SUCH INSTALLATIONS. HANGERS MUST BE TWO FLUTES APART WHERE THEY OCCUR ON THE SAME SPAN.
7. HANGERS SUPPORTED BY METAL DECK WITH STRUCTURAL CONCRETE FILL SHALL BE INSTALLED USING ICBO APPROVED ANCHORAGE SYSTEMS. SUCH HANGERS SHALL BE USED TO SUPPORT DUCTWORK (54" X 16" MAX.), PIPING (4" ROUND MAX.), OR CEILINGS. HANGERS MUST BE AT LEAST TWO FLUTES PART ON SAME DECK SPAN. LARGER DUCTWORK AND PIPING SHALL BE SUPPORTED BY STRUCTURAL BEAMS OR COLUMNS.

WELDING OF REINFORCING BARS

PART I - GENERAL REQUIREMENTS

A. SCOPE: REINFORCING STEEL MAY BE SUBJECT TO CRACKING AND EMBRITTLEMENT WHEN WELDED, AND SPECIAL PROCEDURES ARE NEEDED TO MINIMIZE THIS PROBLEM, IN ACCORDANCE WITH THE REQUIREMENTS OF THE RULES AND REGULATIONS CONCERNING PROCEDURES BY WHICH REINFORCING STEEL MAY BE WELDED.

B. APPLICATION: ALL WELDING OF REINFORCING STEEL SHALL USE WELDING PROCEDURES AND REINFORCING STEEL APPROVED IN ACCORDANCE WITH THIS RULE.

C. CERTIFICATION OF WELDER: ALL WELDING OF REINFORCING STEEL, EXCEPT THAT PERFORMED IN THE SHOP OF AN APPROVED FABRICATOR, SHALL BE DONE BY OPERATORS WHO HAVE BEEN CERTIFIED BY THE GOVERNING AUTHORITY.

D. STANDARDS FOR WELDING: THE DETAILS, PROCEDURES AND WORKMANSHIP OF REINFORCING STEEL WELDING SHALL BE IN ACCORDANCE WITH THE REQUIREMENTS OF THE REINFORCING STEEL WELDING CODE, AWS D12.1 AS PUBLISHED BY THE AMERICAN WELDING SOCIETY.

E. PREHEAT AND POST COOLING REQUIREMENTS: ALL REINFORCING STEEL SHALL BE PREHEATED PRIOR TO WELDING TO THE TEMPERATURES SPECIFIED IN TABLE 1, EXCEPT THOSE STEEL FOR WHICH SPECIAL QUALIFICATION TESTS ARE PERFORMED AS SPECIFIED IN PART III, SECTION B OF THIS RULE. ALL WELD TYPES REQUIRE PREHEATING INCLUDING TACK WELDS, FILLET WELDS AND ARC STRIKES. THE PREHEAT TEMPERATURE SHALL BE PROVIDED IN THAT PART OF THE REINFORCING STEEL THAT IS WITHIN SIX INCHES OF EITHER SIDE OF THE JOINT.

F. ARC STRIKES: ARC STRIKES ON REINFORCING STEEL OUTSIDE THE AREA OF PERMANENT WELDS SHALL BE AVOIDED. CRACK OR BLEMISHES RESULTING FROM ACCIDENTAL ARC STRIKES SHALL BE GROUND TO A SMOOTH CONTOUR AND CHECKED TO INSURE SOUNDNESS.

G. TACK WELDS: TACK WELDS WHICH DO NOT BECOME A PART OF A PERMANENT WELD ARE PROHIBITED UNLESS AUTHORIZED BY THE DESIGN ENGINEER AND APPROVED BY THE GOVERNING AUTHORITY.

PART II - REINFORCING STEEL REQUIREMENTS:

A. CHEMISTRY IDENTIFICATION: PRIOR TO WELDING, THE CHEMICAL ANALYSIS AND THE "CARBON EQUIVALENT" OF STEEL SHALL BE DETERMINED. THE CARBON EQUIVALENT (C.E.) OF REINFORCING STEEL OR SPLICE MATERIAL SHALL BE CALCULATED FROM ITS CHEMICAL COMPOSITION BY THE FOLLOWING FORMULA:

$$C.E. = \%C + \frac{\%Mn}{6} + \frac{\%Cu}{40} + \frac{\%Ni}{20} + \frac{\%Cr}{10} - \frac{\%Mo}{50} - \frac{\%V}{10}$$

WHERE:
- C - CARBON
- Mn - MANGANESE
- Cu - COPPER
- Ni - NICKEL
- Cr - CHROMIUM
- Mo - MOLYBDENUM
- V - VANADIUM

B. QUALIFICATION TEST FOR WELDABILITY

1. REQUIRED. REINFORCING STEEL WHOSE CARBON EQUIVALENT IS GREATER THAN 0.65% AND IS EQUAL TO OR LESS THAN 0.75% SHALL NOT BE WELDED UNLESS PRIOR QUALIFICATION TESTS VERIFY ACCEPTABLE WELDABILITY. QUALIFICATION TESTS SHALL FOLLOW THE REQUIREMENTS OF SECTION B OF PART III OF THIS RULE TITLED "QUALIFICATION TEST".
2. NOT REQUIRED. THE FOLLOWING REINFORCING STEELS MAY BE WELDED WITHOUT PRIOR QUALIFICATION TESTS:
   A. REINFORCING STEEL CONFORMING TO A706 (GRADE 60).
   B. REINFORCING STEEL CONFORMING TO A615, GRADE 40 AND 60, THAT HAS A CARBON EQUIVALENT OF 0.65% OR LESS AS ESTABLISHED BY THE MANUFACTURER'S CHEMICAL ANALYSIS.
   C. INDIVIDUAL BARS OF REINFORCING STEEL WHERE ITS CHEMICAL COMPOSITION HAS BEEN DETERMINED BY AN APPROVED TESTING AGENCY AND THE CARBON EQUIVALENT DOES NOT EXCEED 0.65%.

C. WELDING NOT PERMITTED: THE FOLLOWING REINFORCING STEEL SHALL NOT BE WELDED UNDER ANY CIRCUMSTANCE:
   1. REINFORCING STEEL WHOSE CHEMISTRY FOR CARBON EQUIVALENT CANNOT BE IDENTIFIED AND/OR IS UNKNOWN.
   2. REINFORCING STEEL WHOSE CARBON EQUIVALENT EXCEEDS 0.75%.

PART III - WELDING PROCEDURES

A. QUALIFIED WELDING PROCEDURES: WELDING PROCEDURES ARE ACCEPTED WITHOUT THE PERFORMANCE OF QUALIFICATION TESTS WHEN CONFORMING TO THE DETAILS AND PROVISIONS OF REINFORCING STEEL WELDING CODE, AND WHEN CONFORMING TO THE FOLLOWING CONDITIONS:
   1. THE REINFORCING STEEL CONFORMS TO THAT STEEL SPECIFIED IN PART II, B2 OF THIS RULE.
   2. THE MANUAL OR SEMI-AUTOMATIC ELECTRIC ARC WELDING PROCESS IS USED.

B. QUALIFICATION TESTS:

1. REQUIRED. WELDING PROCEDURES THAT DO NOT CONFORM TO THE CONDITIONS SPECIFIED UNDER PART III, SECTION A TITLED "QUALIFIED WELDING PROCEDURES" BECAUSE OF REINFORCING STEEL, PROCESS OR TECHNIQUE USED SHALL BE QUALIFIED PRIOR TO USE.
2. QUALIFICATION PROCEDURES. THE QUALIFICATION TESTS SHALL FOLLOW THE METHOD SPECIFIED IN SECTION 6.2 OF THE REINFORCING STEEL WELDING CODE, AWS D12.1-75. THE DEPARTMENT MAY ACCEPT PREVIOUSLY PERFORMED QUALIFICATION TESTS WHEN THE REINFORCING STEEL AND THE JOINT WELD PROCEDURE CONFORM TO THE LIMITATION SPECIFIED IN SECTION 6.2.1 TITLED "LIMITATION OF VARIABLES", OF REINFORCING STEEL CODE, AWS D12.1-75.
3. REPORT AND WITNESS REQUIREMENTS. PROCEDURE SHALL BE WITNESSED AND TESTED BY AN APPROVED TESTING AGENCY. THE REPORT OF WELDING PROCEDURE AND VERIFICATION TESTS IS TO INCLUDE THE FOLLOWING:
   * IDENTIFICATION OF THE PARTICULAR REINFORCING STEEL QUALIFIED BY TEST INCLUDING HEAT NUMBER, CHEMICAL FORMULATION, CARBON EQUIVALENT AND BAR SIZE.
   * WELD TYPE, PREPARATION AND POSITION.
   * WELD PROCESS AND ELECTRODE/FLUX/GAS USED.
   * WELD EQUIPMENT TYPE AND SETTINGS INCLUDING AC, DC AND POLARITY.
   * PREHEAT TEMPERATURES AND POST WELDING COOLING CONTROL.
   * WELDER AND WITNESSING AGENCY.
   * ULTIMATE TENSILE LOAD, PERCENT OF ELONGATION, STRESS AND IDENTIFICATION OF THE FRACTURE LOCATION AND TYPE.
4. APPROVALS REQUIRED. SUCH PROCEDURE AND QUALIFICATION TESTS SHALL BE REVIEWED BY THE DESIGN ENGINEER AND THEN SUBMITTED TO THE GOVERNING AUTHORITY.

PREHEAT TEMPERATURES ARE TO BE VERIFIED BY TEMPERATURE STICKS OR OTHER ACCEPTABLE METHOD.

BSHA

Architecture
Planning
Interior Design
Engineering

919 Fourth Avenue
Suite 200
San Diego, California 92101

619 236-2353
FAX 619 236-6227

President:
Gordon R. Carrier, Architect
Director of Design:
Robert L. Davis, Jr., Architect

JUSTICE CENTER
COUNTY OF SAN DIEGO
PROJECT NUMBER AQ091K

STRUCTURAL ENGINEERS
JOHN A. MARTIN & ASSOCIATES INC.
LOS ANGELES 90057

CONSTRUCTION SET

GENERAL NOTES

S1.2

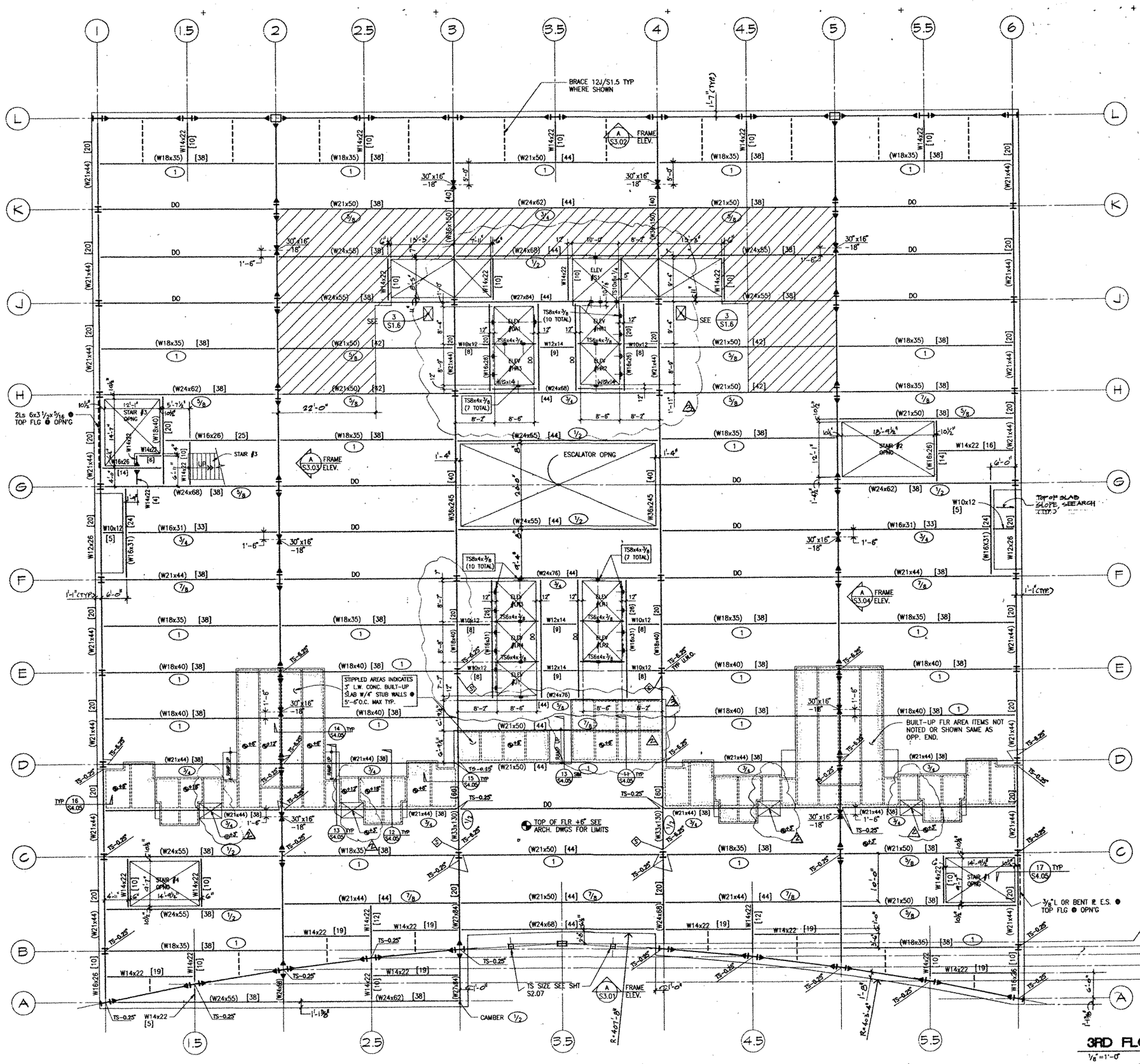

NOTES:

1. 3RD FLOOR REFERENCE FLOOR ELEVATION +62'-6"
2. FOR BALANCE OF NOTES, SEE SHT. S2.09

3RD FLOOR FRAMING PLAN

1/8"=1'-0"

BOWA

Architecture
Planning
Interior Design
Engineering

519 Fourth Avenue
Suite 300
San Diego, California 92101

619 239-2353
FAX 619 239-9227

President:
Gordon B. Carter, Architect
Director of Design
Robert L. Davis, Jr., Architect

JUSTICE CENTER
COUNTY OF SAN DIEGO
PROJECT NUMBER AQ091K

STRUCTURAL ENGINEERS
JOHN A. MARTIN & ASSOCIATES, INC.
LOS ANGELES, CALIFORNIA

CONSTRUCTION SET

NUMBER	DATE	REVISION
1	10-10-96	FINAL DOCUMENTATION
2	1-17-97	PRICE BID PACKAGE
3	6-16-97	PRICE BID PACKAGE

DATE 8-2-95
PROJECT NO. 2692.00
DRAWN HT
CHECKED LG
FILE NO. 2692.S.FC2 08/08/95 14:44

THIRD FLOOR PLAN

S2.10

133

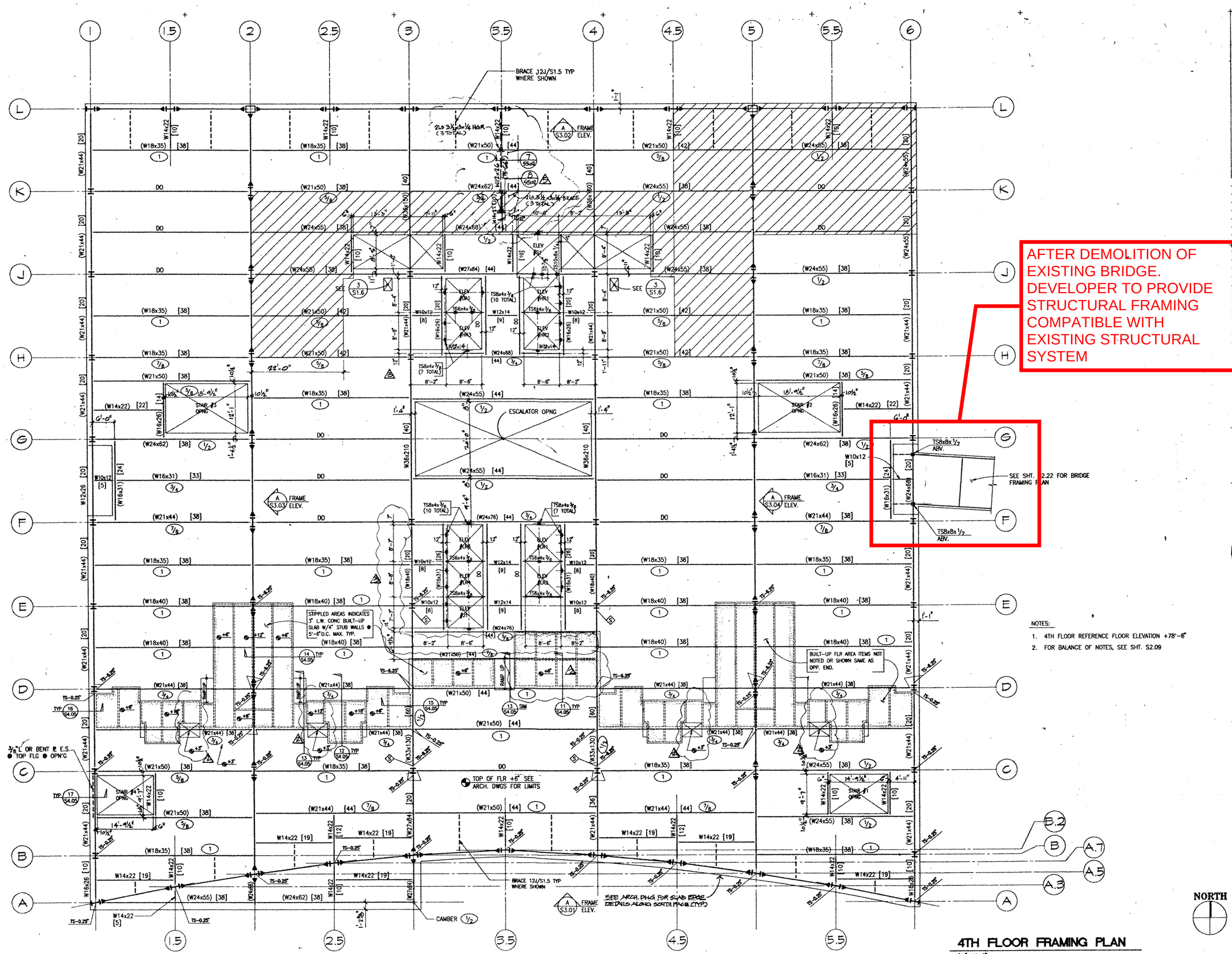

NOTES:

1. 4TH FLOOR REFERENCE FLOOR ELEVATION +78'-6"
2. FOR BALANCE OF NOTES, SEE SHT. S2.09

NORTH

4TH FLOOR FRAMING PLAN

1/8" = 1'-0"

JUSTICE CENTER
COUNTY OF SAN DIEGO
PROJECT NUMBER AQ091K

STRUCTURAL ENGINEERS
JOHN A. MARTIN & ASSOCIATES, INC.

CONSTRUCTION SET

FOURTH FLOOR PLAN

S2.11

134

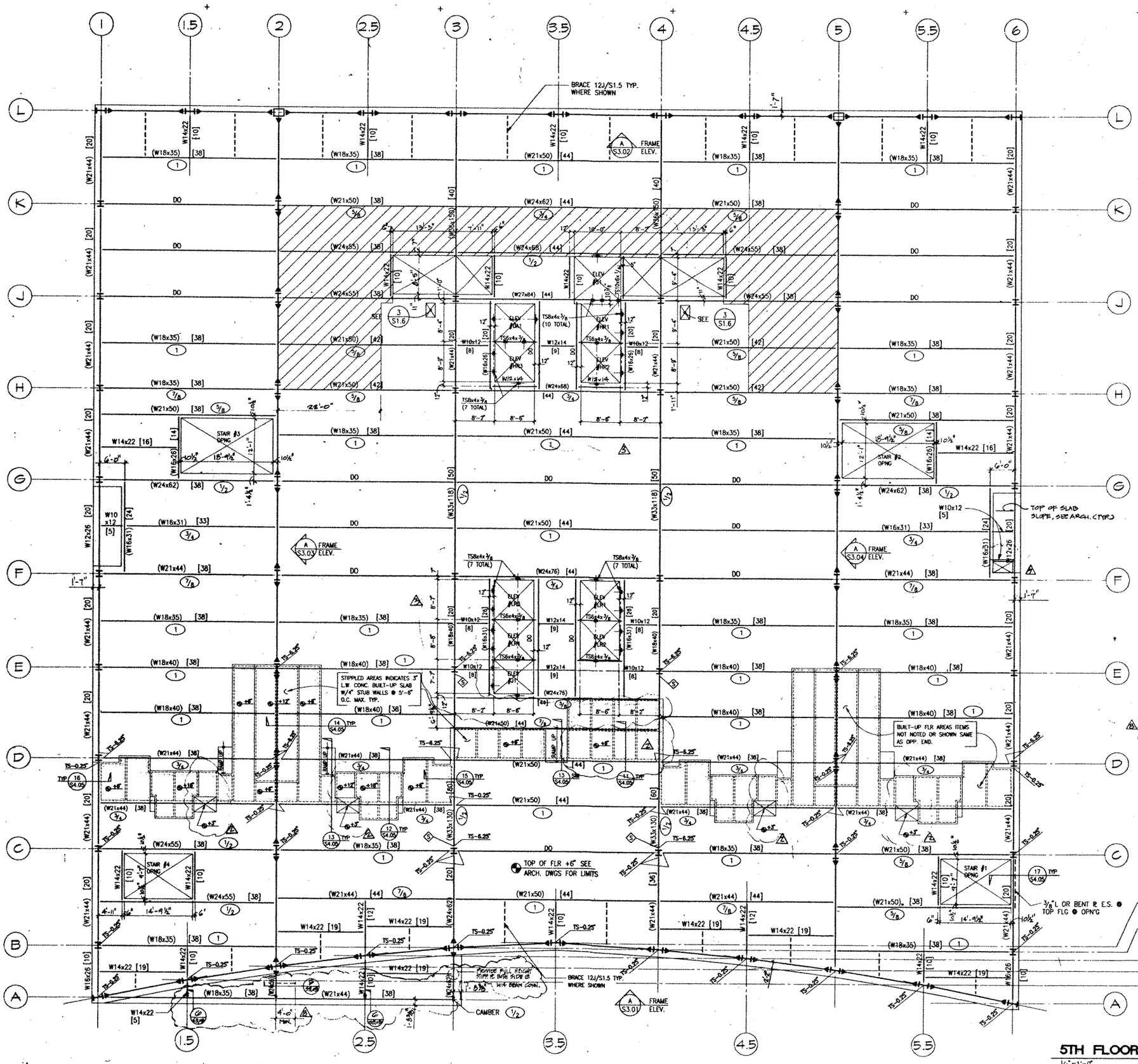

NOTES:

1. 5TH FLOOR REFERENCE FLOOR ELEVATION +94'-6"
2. FOR BALANCE OF NOTES, SEE SHT. S2.09

⊗ • INDICATES WINDOW WASHING DAVIT SOCKETS; SEE ARCH. DWG FOR EXACT LOCATIONS & SEE FOR DETAILS.

5TH FLOOR FRAMING PLAN

1/8"=1'-0"

Architecture
Planning
Interior Design
Engineering

619 Fourth Avenue
Suite 300
San Diego, California 92101

619 239-2355
FAX 619 239-6227

President:
Gordon R. Carter, Architect
Director of Design:
Robert L. Gehl, Jr., Architect

JUSTICE CENTER
COUNTY OF SAN DIEGO
PROJECT NUMBER A0091K

STRUCTURAL ENGINEERS
JOHN A. MARTIN & ASSOCIATES, INC.
LOS ANGELES 90017
CS NO. 5795

REGISTERED PROFESSIONAL ENGINEER
DAVID C. L. CHI
No. 38375
EXP. 9-30-96
STRUCTURAL
STATE OF CALIFORNIA

CONSTRUCTION SET

ISSUES	DATE
FINAL CONSTRUCTION SET & BID PACKAGE	10-10-94
	11-7-94
	6-16-94
PRELIM. BID PACKAGE	6-20-94

DATE	8-2-93
PROJECT NO.	2921.00
DRAWN	HT
CHECKED	LG
TITLE NO.	
PROJECTION	1/8" = 1'-0"

FIFTH FLOOR PLAN

S2.12

ALL IDEAS, DESIGN, ARRANGEMENTS AND PLANS INDICATED OR REPRESENTED BY THIS DRAWING ARE OWNED BY, AND THE PROPERTY OF, BSHA, INC. AND WERE CREATED, EVOLVED AND DEVELOPED FOR USE ON, AND IN CONNECTION WITH THIS PROJECT. NONE OF SUCH IDEAS, DESIGN, ARRANGEMENTS OR PLANS SHALL BE USED BY, OR DISCLOSED TO ANY PERSON, FIRM, OR CORPORATION FOR ANY PURPOSE WHATSOEVER WITHOUT THE WRITTEN PERMISSION OF BSHA, INC. FILING THESE DRAWINGS OR SPECIFICATIONS WITH ANY PUBLIC AGENCY IS NOT A PUBLICATION OF SAME. NO COPYING, REPRODUCTION OR USE THEREOF IS PERMISSIBLE WITHOUT THE CONSENT OF BSHA, INC.

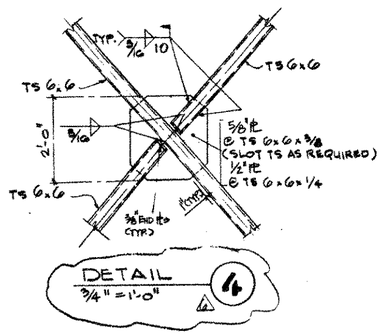

DETAIL 4
3/4" = 1'-0"

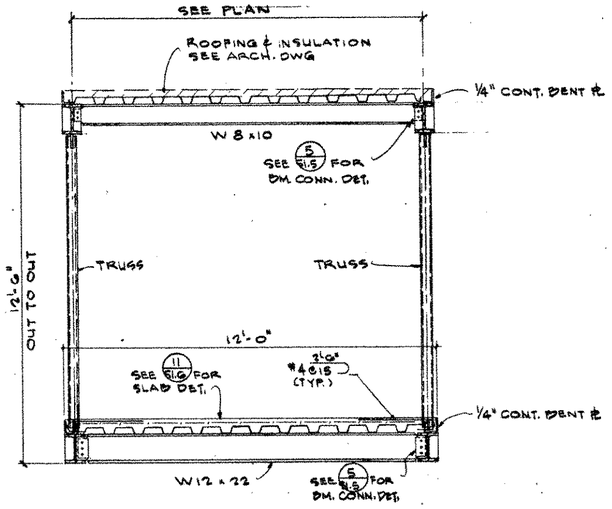

TYPICAL BRIDGE SECTION 1
1/2" = 1'-0"

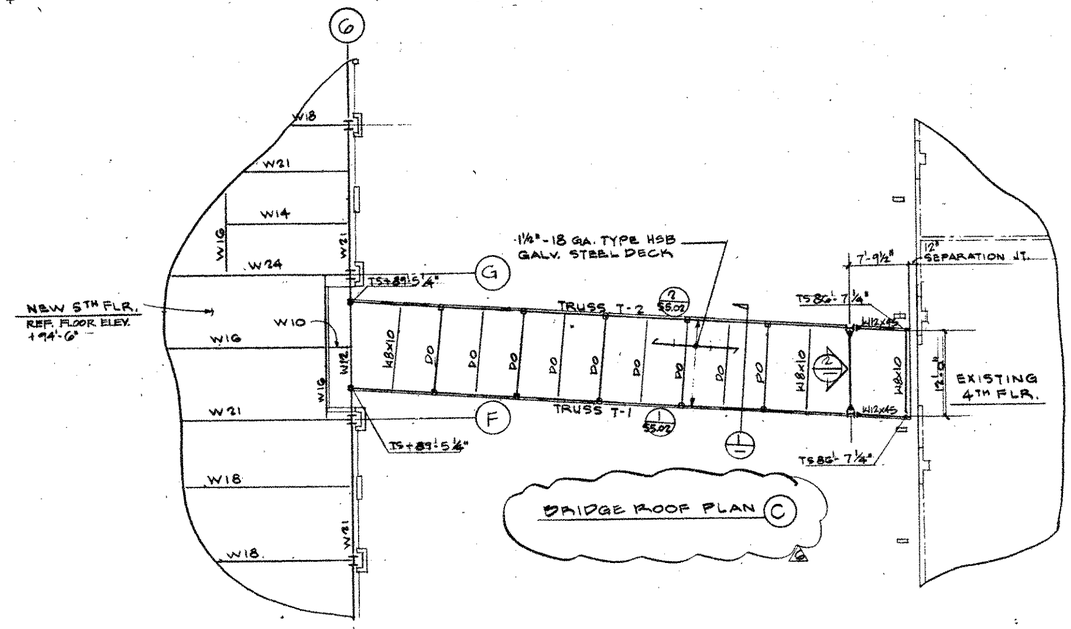

BRIDGE ROOF PLAN C

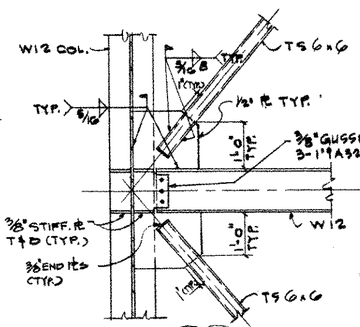

DETAIL 5
3/4" = 1'-0"

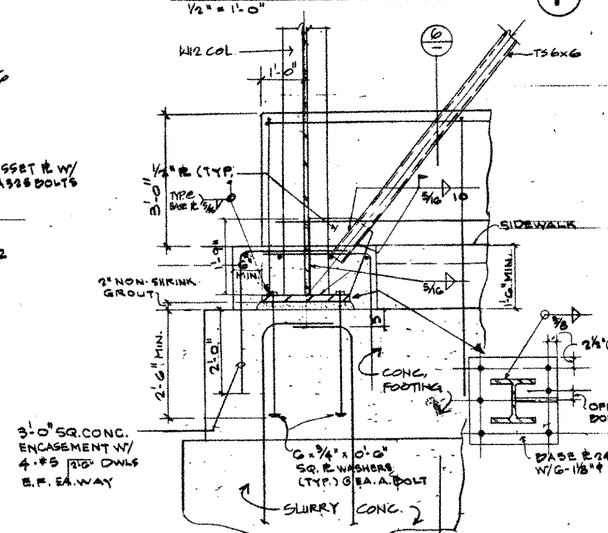

SECTION 3
3/4" = 1'-0"

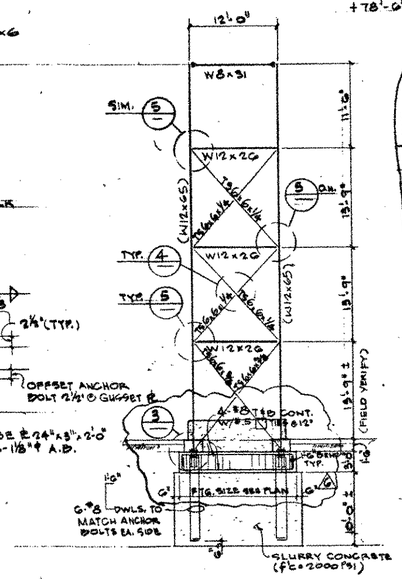

FRAME ELEVATION 2
1/8" = 1'-0"

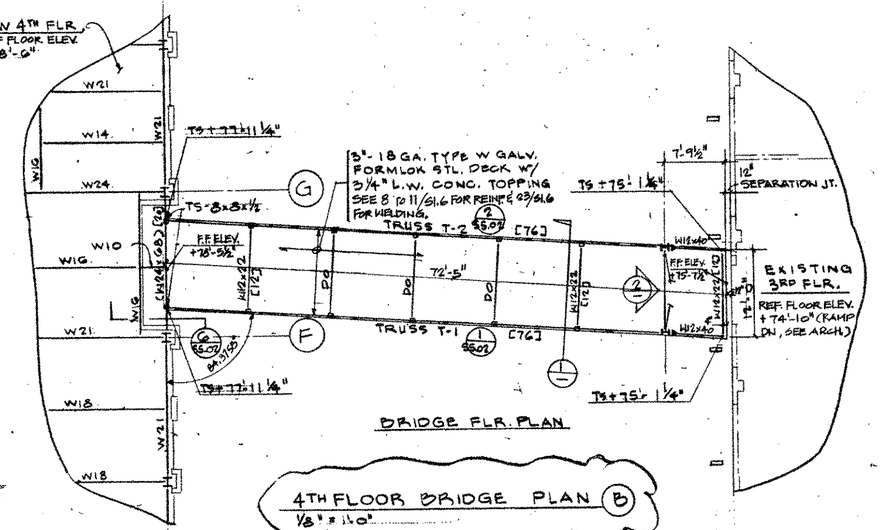

4TH FLOOR BRIDGE PLAN B
1/8" = 1'-0"

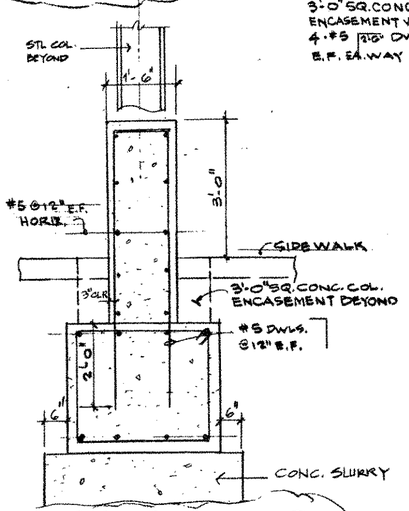

SECTION 6
3/4" = 1'-0"

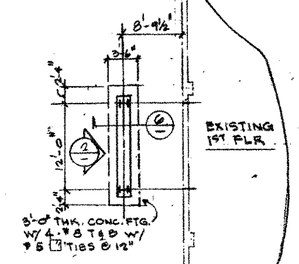

BASEMENT PIER FOUNDATION PLAN A

TYPICAL DETAILS FOR UNION STREET BRIDGE TO BE DEMOLISHED. FOR INFORMATION ONLY.

Architecture
Planning
Interior Design
Engineering
918 Fourth Avenue
Suite 200
San Diego, California 92101
619 239-2353
FAX 619 239-0227
President:
Gordon R. Carrier, Architect
Director of Design:
Robert L. Davis, Jr., Architect
STRUCTURAL ENGINEERS
JOHN A. MARTIN & ASSOCIATES, INC.
1000 WILSHIRE BOULEVARD
LOS ANGELES 90017 483-8490

REGISTERED PROFESSIONAL ENGINEER
LOUIS R. CHOI
No. 2025
Exp. 12-31-95
STRUCTURAL
STATE OF CALIFORNIA
Louis Choi

JUSTICE CENTER
SAN DIEGO
COUNTY OF SAN DIEGO
PROJECT NUMBER A0091K

DATE	REVISIONS
12-22-94	FULL CONSTRUCTION
12-17-94	FRAME BOT PACKAGE
4-18-94	ADDL BID PACKAGE

CONSTRUCTION SET 3-14-94

DATE	12-22-94
PROJECT NO.	2421.00
DRAWN	CL
CHECKED	LG
FILE NO.	

BRIDGE FRAMING PLANS AND DETAILS

52.22

ALL IDEAS, DESIGN, ARRANGEMENTS AND PLANS INDICATED OR REPRESENTED BY THIS DRAWING ARE OWNED BY, AND THE PROPERTY OF, BSHA, INC. AND WERE CREATED, EVOLVED AND DEVELOPED FOR USE ON, AND IN CONNECTION WITH THIS PROJECT. NONE OF SUCH IDEAS, DESIGN, ARRANGEMENTS OR PLANS SHALL BE USED BY, OR DISCLOSED TO ANY PERSON, FIRM, OR CORPORATION FOR ANY PURPOSE WHATSOEVER WITHOUT THE WRITTEN PERMISSION OF BSHA, INC. FILING THESE DRAWINGS OR SPECIFICATIONS WITH ANY PUBLIC AGENCY IS NOT A PUBLICATION OF SAME. NO COPYING, REPRODUCTION OR USE THEREOF IS PERMISSIBLE WITHOUT THE CONSENT OF BSHA, INC.

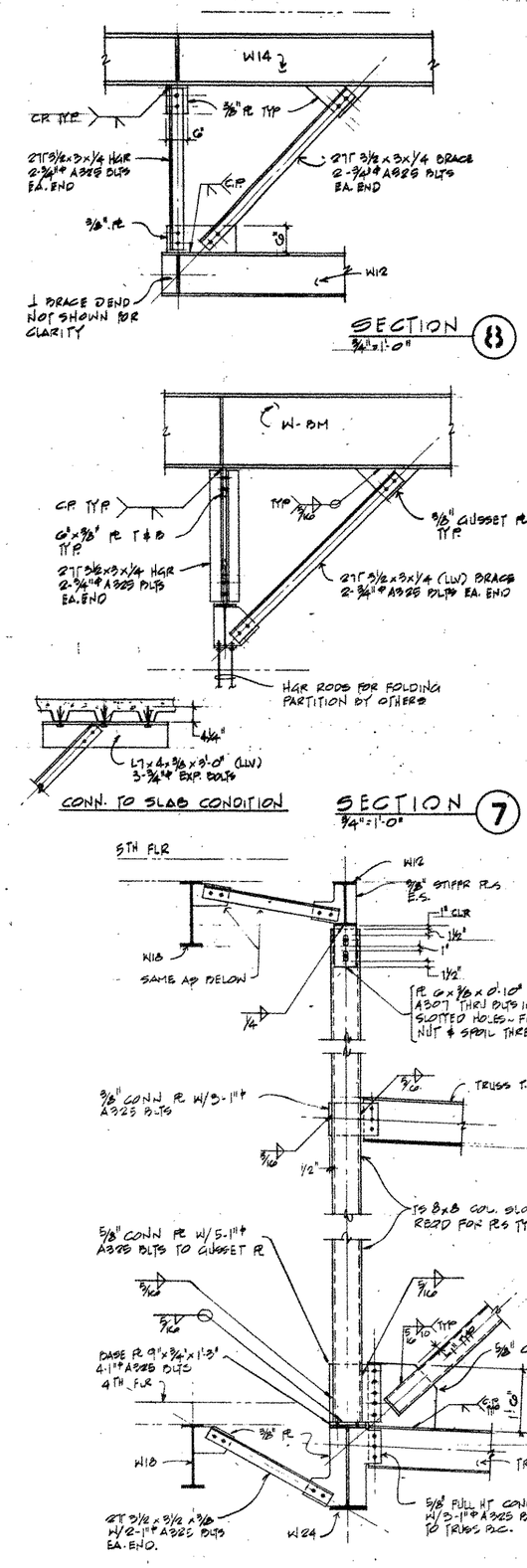

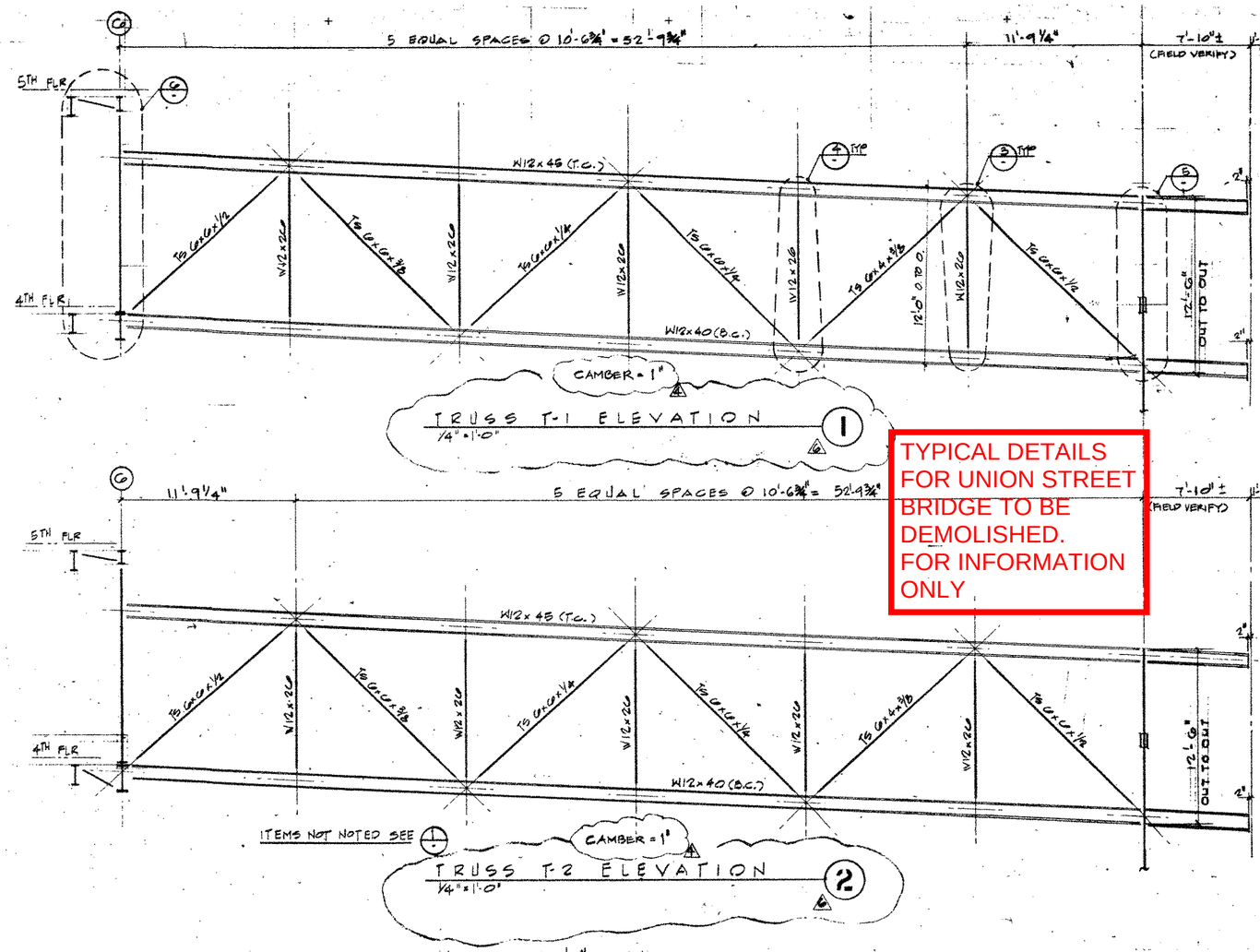

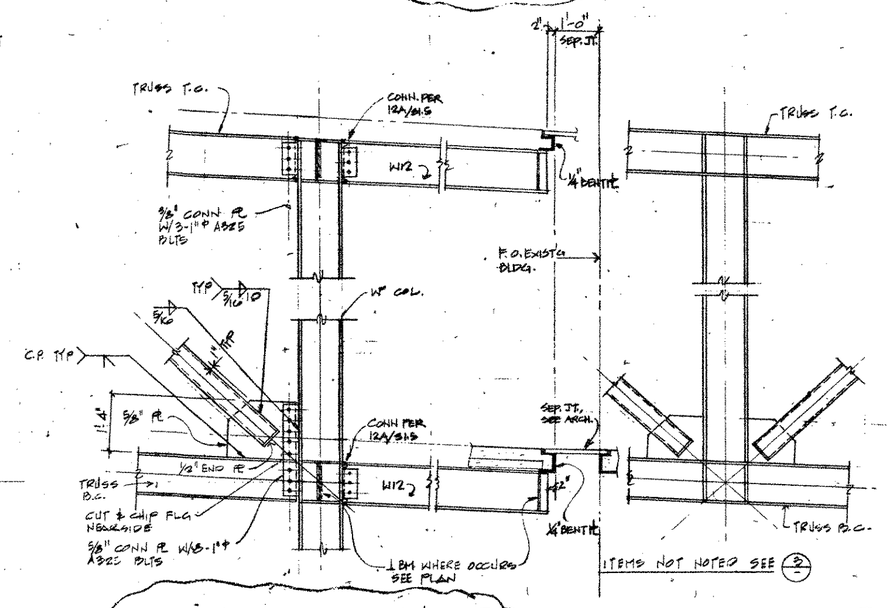

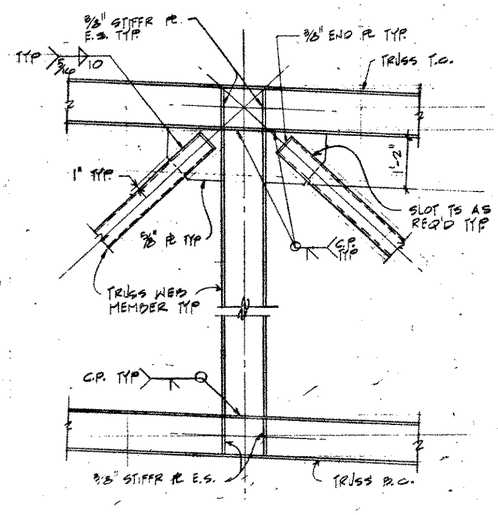

Architecture
Planning
Interior Design
Engineering
519 Fourth Avenue
Suite 300
San Diego, California 92101
619 239-2353
FAX 619 239-8227
President:
Gordon R. Carter, Architect
Director of Design:
Robert L. Davis, Jr., Architect
STRUCTURAL ENGINEERS
JOHN A. MARTIN & ASSOCIATES, INC.
1200 S. BROADWAY, SPOKANE
LOS ANGELES 90015 481-4490

REGISTERED PROFESSIONAL ENGINEER
No. 2685
Exp. 9-30-96
STRUCTURAL
STATE OF CALIFORNIA

JUSTICE CENTER
COUNTY OF SAN DIEGO
PROJECT NUMBER A40911K

DATE	REVISIONS
12-22-93	FINAL CO-ORDINATION
1-17-94	STRUCT BID PACKAGE
6/6/94	MECH BID PACKAGE

CONSTRUCTION SET 3-31-94

DATE	12-22-93
PROJECT NO.	2621.00
DRAWN	HT
CHECKED	LC
P.E. NO.	

TRUSS ELEVATIONS & DETAILS

S5.02

AIR DISTRIBUTION SCHEDULE

UNIT MARK	MFR	MODEL	FRAME	DUCT SIZE	MAX CFM	DESCRIPTION
6	TITUS	PCS	3	6"ø	145	PERFORATED FACE, LAY-IN DIFFUSER, 490 WHITE
8	TITUS	PCS	3	8"ø	245	PERFORATED FACE, LAY-IN DIFFUSER, 490 WHITE
10	TITUS	PCS	3	10"ø	345	PERFORATED FACE, LAY-IN DIFFUSER, 490 WHITE
12	TITUS	PCS	3	12"ø	460	PERFORATED FACE, LAY-IN DIFFUSER, 490 WHITE
14	TITUS	PCS	3	14"ø	560	PERFORATED FACE, LAY-IN DIFFUSER, 490 WHITE
16	TITUS	PCS	3	16"ø	800	PERFORATED FACE, LAY-IN DIFFUSER, 490 WHITE
F	TITUS	TDC	3	--	--	LAY IN TEE-BAR, PAINTED STD. 490 WHITE
G	TITUS	PAR	3	--	--	PERFORATED FACE, LAY-IN GRILLE, 490 WHITE W/RD. NECK - EXH.
H	TITUS	PXP	3	--	1300	LAY IN TEE-BAR, PAINTED STD. 490 WHITE -24"x24"
I	KRUEGER	C1100	22	--	--	SURFACE MOUNT, CURVED FRAME, PAINTED STD. 490 WHITE, W/ OBD
J	TITUS	TDC	1	--1	--	SURFACE MOUNT, CURVED FRAME, PAINTED STD. 490 WHITE, W/ OBD
K	KRUEGER	C-1190	22	--	--	SURFACE MOUNT, CURVED FRAME, PAINTED STD. 490 WHITE W/OBD & RD NECK-EXH.
L	KRUEGER	C-1190	22	--	--	SURFACE MOUNT, CURVED FRAME, PAINTED STD. 490 WHITE W/TRANSFER/RETURN
M	TITUS	TBS	--	--	--	SLOT DIFFUSER
N	TITUS	300RS5	STD	--	--	SIDEWALL REGISTER, DOUBLE DEFLECTION, W/ OBD.
P	TITUS	350RL	STD	--	--	SIDEWALL GRILLE.
Q	TITUS			--	--	LINEAR GRILLE

FIRE DAMPER SCHEDULE

UNIT MARK	MANUFACTURER/MODEL	SLEEVE	U.L. RATING	REMARKS
FD-1	RUSKIN - IBD2-STYLE-B	12"	1 1/2 HR	165°F FUSIBLE LINK, INSTALL PER MFG. INSTRUCTIONS & LOCAL CODE
FD-2	RUSKIN - IBD2-STYLE-A	12"	1 1/2 HR	165°F FUSIBLE LINK, INSTALL PER MFG. INSTRUCTIONS & LOCAL CODE
FSD-1	RUSKIN-FSD-36	12"	1 1/2 HR	INSTALL PER MFG. INSTRUCTIONS

VAV BOX SCHEDULE

UNIT MARK	MAKE	INLET SIZE	MAX CFM	DESCRIPTION
4	TITUS	4"ø	200	REVERSE ACTING NORMALLY CLOSED
6	TITUS	6"ø	450	REVERSE ACTING NORMALLY CLOSED
8	TITUS	8"ø	700	REVERSE ACTING NORMALLY CLOSED
10	TITUS	10"ø	1150	REVERSE ACTING NORMALLY CLOSED
12	TITUS	12"ø	1700	REVERSE ACTING NORMALLY CLOSED
14	TITUS	14"ø	2300	REVERSE ACTING NORMALLY CLOSED
16	TITUS	16"ø	3000	REVERSE ACTING NORMALLY CLOSED
6H	TITUS	6"ø	450	REVERSE ACTING NORMALLY CLOSED W/ 1 ROW HEATING COIL
8H	TITUS	8"ø	700	REVERSE ACTING NORMALLY CLOSED W/ 1 ROW HEATING COIL
10H	TITUS	10"ø	1150	REVERSE ACTING NORMALLY CLOSED W/ 1 ROW HEATING COIL
12H	TITUS	12"ø	1700	REVERSE ACTING NORMALLY CLOSED W/ 1 ROW HEATING COIL
14H	TITUS	14"ø	2300	REVERSE ACTING NORMALLY CLOSED W/ 1 ROW HEATING COIL
16H	TITUS	16"ø	3000	REVERSE ACTING NORMALLY CLOSED W/ 1 ROW HEATING COIL
6F	TITUS	6"ø	450	REVERSE ACTING NORMALLY CLOSED SERIES FANPOWERED W/ 1/10 HP 277V-1ø W/ DISCONNECT
8F	TITUS	8"ø	650	REVERSE ACTING NORMALLY CLOSED SERIES FANPOWERED W/ 1/4 HP 277V-1ø W/ DISCONNECT
10F	TITUS	10"ø	1050	REVERSE ACTING NORMALLY CLOSED SERIES FANPOWERED W/ 1/3 HP 277V-1ø W/ DISCONNECT
12F	TITUS	12"ø	1500	REVERSE ACTING NORMALLY CLOSED SERIES FANPOWERED W/ 1/2 HP 277V-1ø W/ DISCONNECT
14F	TITUS	14"ø	2100	REVERSE ACTING NORMALLY CLOSED SERIES FANPOWERED W/ 3/4 HP 277V-1ø W/ DISCONNECT

DRAWING SCHEDULE

SHEET NO.	DESCRIPTION	SHEET NO.	DESCRIPTION
M1.1	DRAWING SCHEDULE & GENERAL NOTES	M3.2	ROOF EQUIPMENT PLAN
M1.2	EQUIPMENT SCHEDULES	M3.3	ROOF COORDINATION PLAN
M2.1	FIRST FLOOR HVAC PLAN	M4.1	SECTIONS & DETAILS
M2.2	SECOND FLOOR HVAC PLAN	M4.2	DUCT RISERS
M2.3	THIRD FLOOR HVAC PLAN	M4.3	DUCT RISERS
M2.4	FOURTH FLOOR HVAC PLAN	M5.1	PIPING SCHEMATIC - CHILLED & CONDENSER WATER
M2.5	FIFTH FLOOR HVAC PLAN	M5.2	PIPING SCHEMATIC - HOT WATER
M2.6	SIXTH FLOOR HVAC PLAN	M6.1	HVAC WIRING DIAGRAMS
M2.7	SEVENTH FLOOR HVAC PLAN		
M2.8	EIGHTH FLOOR HVAC PLAN		
M2.9	NINTH FLOOR HVAC PLAN		
M2.10	TENTH FLOOR HVAC PLAN		
M2.11	ELEVENTH FLOOR HVAC PLAN		
M2.12	TWELFTH FLOOR HVAC PLAN		
M2.13	THIRTEENTH FLOOR HVAC PLAN		
M2.14	ROOF HVAC PLAN		
M2.15	PARKING LEVEL P-1 HVAC PLAN		
M2.16	PARKING LEVEL P-2 HVAC PLAN		
M2.17	PARKING LEVEL P-3 HVAC PLAN		
M3.1	SIXTH FLOOR FAN ROOM PLAN		

MECHANICAL LEGEND

SYMBOL	ABBR	DESCRIPTION
		EQUIPMENT SYMBOL
		DRAWING NUMBER
		DETAIL NUMBER/DRAWING NUMBER
		SECTION NUMBER/SHEET NUMBER
SP		STATIC PRESSURE SENSOR
S		DUCT SMOKE DETECTOR PROVIDED BY E.C.
T	T'STAT	ROOM THERMOSTAT
TS		EMS TEMPERATURE SENSOR
		SUPPLY DUCT-SECTION
		RETURN DUCT-SECTION
		EXHAUST DUCT-SECTION
		SOUND INSULATED DUCT. DIMS SHOWN NET OUTSIDE
		DUCT TURNING VANES
	FC	DUCT FLEXIBLE CONNECTUON
	MVD	MANUAL VOLUME DAMPER
		ACCOUSTICAL FLEX DUCT IN SOUND WALL
	FD	FIRE DAMPER WITH DUCT DOOR
	SFD	SMOKE FIRE DAMPER WITH DUCT DOOR
		MOTORIZED DAMPER
		ROUND TO RECTANGULAR TRANSITION
	R D	GRADUAL DUCT RISE/DROP IN DIRECTION OF FLOW
	TG	TRANSFER GRILLE
		FLEXIBLE DUCT
		APPROX. LOCATION OF ELEC. CONN. BY E.C.
		APPROX. LOCATION OF WATER CONN. BY P.C
		APPROX. LOCATION OF DRAIN CONN. BY P.C
C		LOCATION OF CARBON MONOXIDE SENSOR LOCATED 5'-0" AFF. W/THE TAG OF EXHAUST SHAFT IT ACTIVATES
		SUPPLY AIR DIFFUSER
		RETURN AIR GRILLE
		RETURN AIR GRILLE-W/ACCOUSTIC FLEX. 14ø U.N.O.
		EXHAUST GRILLES

ABBR	DESCRIPTION
AD	ACCESS DOOR (IN DUCT OR EQUIPMENT)
AP	ACCESS PANEL (IN CEILING OR WALL)
NIC	NOT IN CONTRACT
CFM	CUBIC FEET OF AIR / MINUTE
EA, OA	EXHAUST AIR, OUTSIDE AIR
NO, NC	NORMALLY OPEN, NORMALLY CLOSED
HOA	HAND-OFF-AUTOMATIC SWITCH
VSD	VARIABLE SPEED DRIVE
UND	UNLESS NOTED OTHERWISE
BDD	BACK DRAFT DAMPER
BS	BIRD SCREEN
NTS	NOT TO SCALE
OBD	OPPOSED BLADE DAMPER
BOD	BOTTOM OF DUCT FROM STRUCTURAL SLAB
AFF	ABOVE FINISHED FLOOR
SD	SMOKE DETECTOR
UC	UNDER CUT DOOR !"
GSM	GALVANIZED SHEET METAL
RAG	RETURN AIR OPENING ABOVE CEILING
RAB	SOUND LINIED RETURN AIR BOOT

GENERAL NOTES

1. ALL DUCTWORK TO BE INSTALLED IN ACCORDANCE WITH STANDARD PRACTICES, LOCAL CODES, SMACNA STANDARDS, UNIFORM BUILDING CODE. DUCT SIZES SHOWN ARE OUTSIDE DIMENSIONS.
2. SEAL DUCTWORK IN VAV SYSTEMS UPSTREAM OF VAV BOXES PER SMACNA SEAL CLASS A. SEAL DUCTWORK DOWNSTREAM OF VAV BOXES, EXHAUST DUCTWORK AND CONSTANT VOLUME DUCTWORK PER SMACNA SEAL CLASS C.
3. DUCT AND PIPE INSULATION SHALL BE INSTALLED PER SECTION SPECIFICATIONS AND COMPLY WITH TITLE 24 REQUIREMENTS. DUCT LINING TO BE 1" INDOORS AND 2" OUTDOORS.
4. ALL PENETRATIONS, CUTTING, PATCHING, AND FRAMED OPENINGS TO BE PERFORMED BY GENERAL CONTRACTOR AND COORDINATED WITH MECHANICAL CONTRACTOR. ALL DIMENSIONS TO BE FIELD VERIFIED.
5. ALL CONCRETE WORK TO BE PERFORMED BY GENERAL CONTRACTOR.
6. ALL EQUIPMENT PADS AND SUPPORTS TO BE MADE LEVEL BY GENERAL CONTRACTOR.
7. WEIGHTS SHOWN INCLUDE EQUIPMENT, MOTORS, ISOLATORS, BASES, AND INERTIA BASES, BUT DO NOT INCLUDE HOUSEKEEPING PADS.
8. ALL SHAFTS FOR DUCTS, RETURN AIR, AND EXHAUST AIR TO BE AIRTIGHT AND FIRE RATED PER CODE BY GENERAL CONTRACTOR. CEILING RETURN AIR PLENUM TO BE OF NON-COMBUSTIBLE CONSTRUCTION APPROVED BY LOCAL CODE.
9. DUCT ACCESS DOORS TO BE PROVIDED AT ALL FIRE DAMPERS BY MECHANICAL CONTRACTOR.
10. ACCESS TO ALL FIRE DAMPERS, VAV BOXES, AND DAMPERS TO BE PROVIDED AND INSTALLED AS REQUIRED PER CODE BY GENERAL CONTRACTOR.
11. ALL ARCHITECTURAL GRATES, GRILLES AND EXTERIOR LOUVERS TO BE PROVIDED AND INSTALLED BY OTHERS. HVAC LOUVERS TO BE MANUFACTURED WITH 50% OR MORE FREE AREA.
12. BEAM PENETRATIONS HAVE BEEN CAREFULLY DESIGNED. SUPPLY & RETURN AIR OPENINGS SHALL NOT BE USED BY OTHER TRADES. GENERAL CONTRACTOR TO PROVIDE BEAM PENETRATIONS AND NECESSARY CUTTING, PATCHING, SLEEVING, FIREPROOFING, ETC. AS REQUIRED FOR DUCT CLEARANCE THRU OPENINGS.
13. BOTTOM OF DUCT-(BOD) DIMENSIONS ARE MINIMUM. FIELD VERIFY ALL CONDITIONS.

BOHA
Architecture
Planning
Interior Design
Engineering
910 Fourth Avenue
Suite 200
San Diego, California 92101
619 239-2353
FAX 619 239-6227
President:
Gordon R. Santher, Architect
Director of Design:
Robert L. Dorva, Jr., Architect

JUSTICE CENTER
COUNTY OF SAN DIEGO
PROJECT NUMBER A0091K
03/11/2005

CMTA

ISSUES: CONSTRUCTION SET

DATE 10/21/04
PROJECT NO. 93-503
DRAWN
CHECKED
FILE NO.

DRAWING SCHEDULE & GENERAL NOTES

M1.1

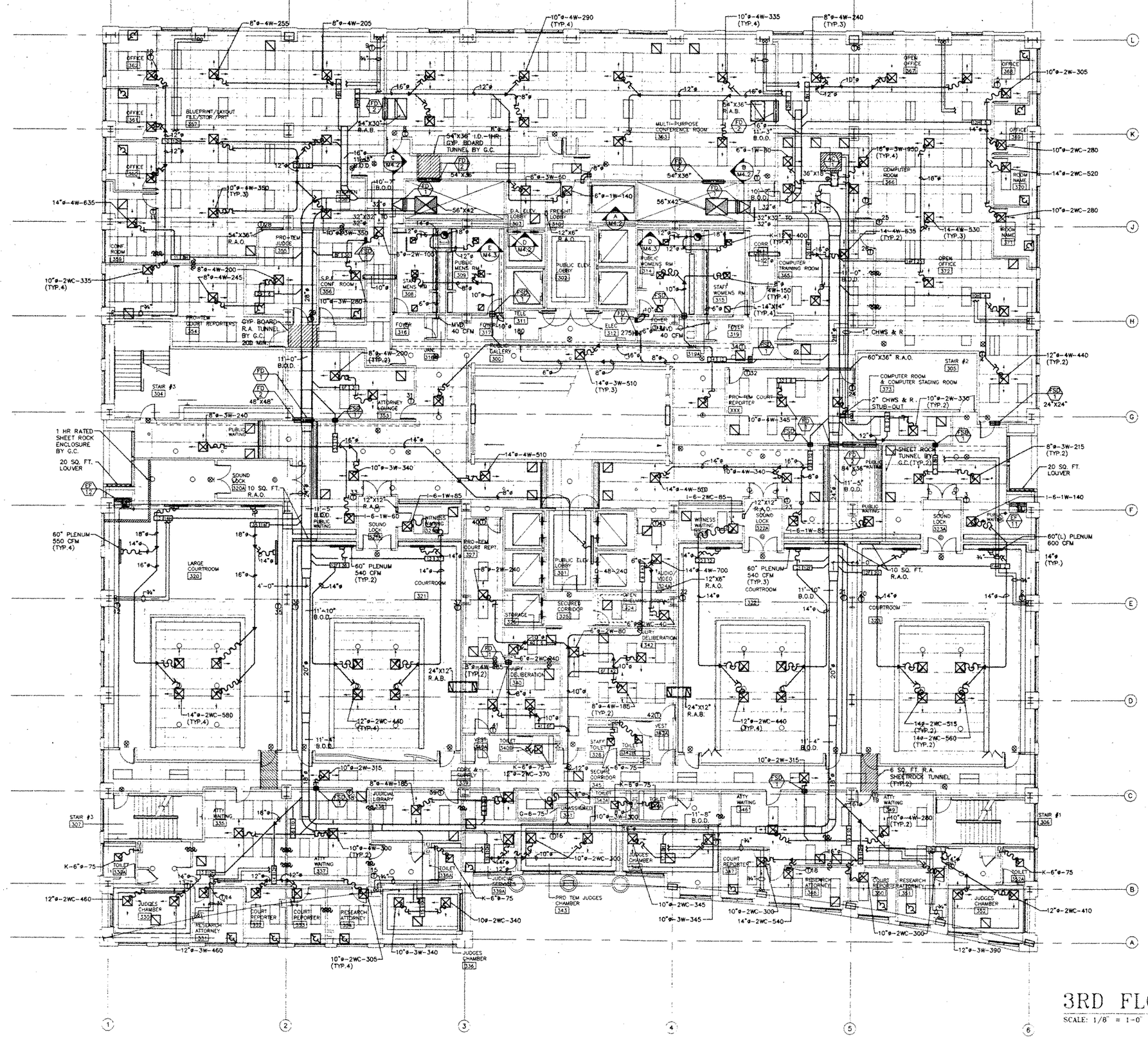

VAV BOX SCHEDULE

ZONE #	BOX SIZE	HEAT GPM	CFM (MAX)	CFM (MIN)
1	10H	1.0	800	240
2	14H	1.5	1860	545
3	8H	.75	570	170
4	10H	.75	880	260
5	12H	1.5	1385	420
6	8H	.75	720	215
7	12HF	1.0	1340	400
8	12HF	1.0	1360	400
9	6H	.75	460	140
10	12H	1.0	1340	400
11	8H	.75	635	200
12	14H	2.0	2260	700
13	10H	1.0	920	275
14	12H	1.0	1220	370
15	10H	.75	720	215
16	10H	.75	900	270
17	8H	.75	690	210
18	12H	1.5	1440	435
19	10		875	185
20	12F		1570	165
21	12F		1420	150
22	12		1505	160
23	12		1020	195
24	8		660	40
25	14F		1590	260
26	14F		1270	380
27	AC UNIT			
28	12		1400	234
29	6		445	90
30	8F		380	30
31	6F		400	60
32	6		345	50
33	12		1390	200
34	12		2130	320
35	14F		2260	210
36	12F		1420	300
37	12		1505	300
38	10		600	180
39	8		555	60
40	6		280	50
41	6F		370	60
42	6F		265	90

3RD FLOOR PLAN

SCALE: 1/8" = 1'-0" F.F ELEVATION +62'-6"

NORTH

BOHA
Architecture
Planning
Interior Design
Engineering
919 Fourth Avenue
Suite 200
San Diego, California 92101
619 239-3353
FAX 619 238-8227
Presidents:
Gordon S. Carter, Architect
Director of Design:
Robert L. Davis, Jr., Architect

JUSTICE CENTER
COUNTY OF SAN DIEGO
PROJECT NUMBER A00016
03/11/2005

CMT

ISSUES CONSTRUCTION SET

DATE 10/25/94
PROJECT NO. 93-593
DRAWN
CHECKED
FILE NO.

THIRD FLOOR HVAC PLAN

M2.3

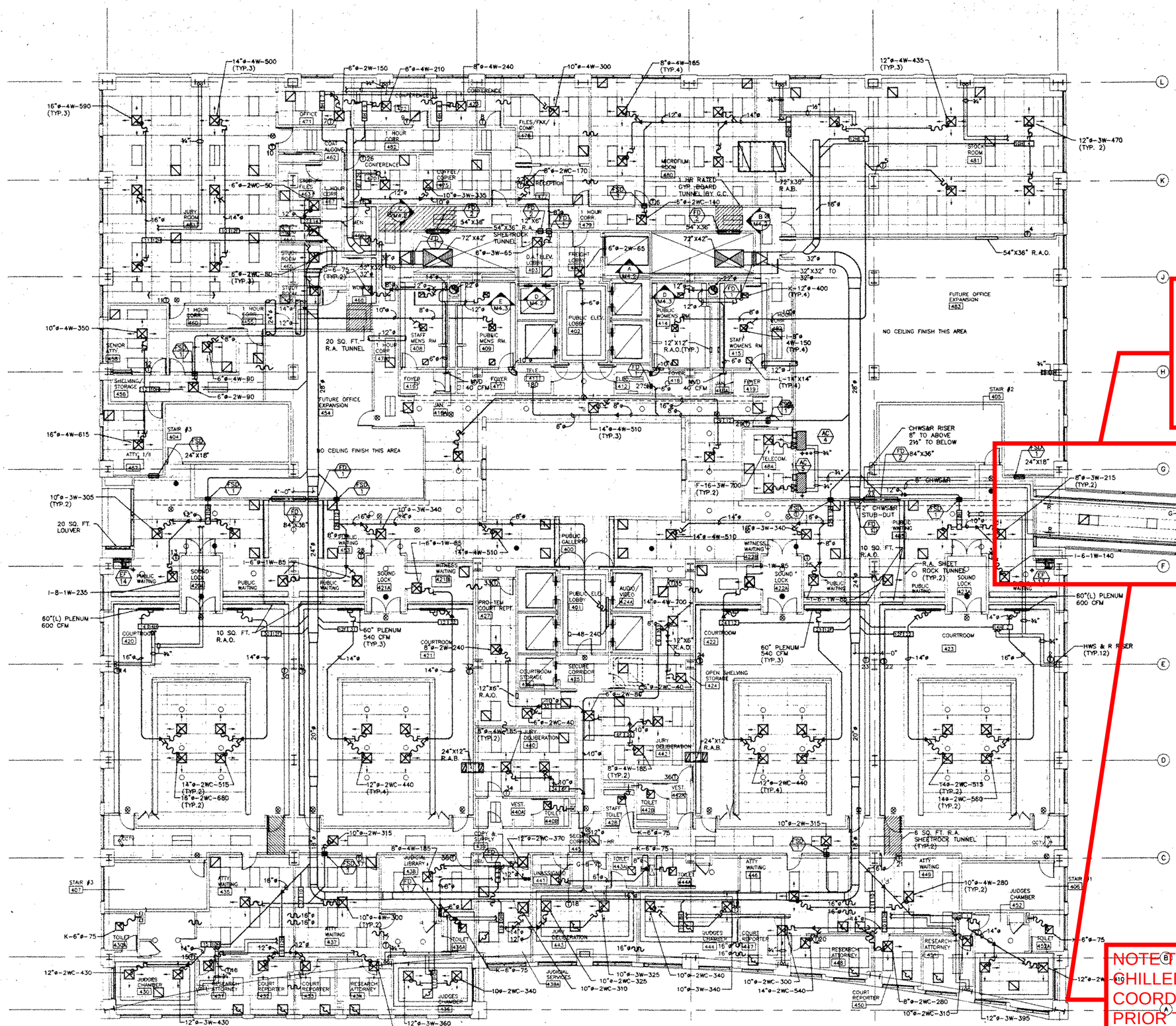

AFTER DEMOLITION OF EXISTING BRIDGE. DEVELOPER TO REPLICATE FLOOR AND CEILING DESIGN TO MATCH EXISTING SYSTEMS AND MATERIALS.

NOTE TO DEVELOPER: CHILLED WATER LINE TO BE COORDINATED WITH COUNTY PRIOR TO REMOVAL OF BRIDGE. TYPICAL.

VAV BOX SCHEDULE

ZONE #	BOX SIZE	HEAT GPM	CFM (MAX)	CFM (MIN)
1	10H	1.0	805	240
2	14H	1.5	1720	540
3	8H	.75	570	170
4	10H	.75	940	280
5	12H	.75	1605	260
6	10H	.75	800	225
7	8H	.75	450	140
8	6H	.75	240	75
9	6H	.75	210	65
10	12F		1500	170
11	12H	1.5	1770	530
12	10H	1.0	965	290
13	10H	.75	845	250
14	14H	1.5	1960	600
15	10H	1.0	860	240
16	12H	1.0	1220	370
17	10H	.75	700	215
18	10H	1.0	960	290

VAV BOX SCHEDULE

ZONE #	BOX SIZE	HEAT GPM	CFM (MAX)	CFM (MIN)
19	8H	.75	680	205
20	12H	1.5	1430	570
21	10		560	185
22	12F		1570	165
23	12F		1420	150
24	12		1505	160
25	12		1020	195
26	6F		200	25
27	14		1500	240
28	12		1260	195
29	12		1595	300
30	12F		1570	165
31	12F		1420	130
32	12		1505	180
33	6		280	50
34	6F		370	60
35	6		740	205
36	6F		450	90
37	10		915	195
38	8		555	60

4TH FLOOR PLAN

SCALE: 1/8" = 1-0" F.F. ELEVATION +80'-0"

BOKA

Architecture
Planning
Interior Design
Engineering

913 Fourth Avenue
Suite 200
San Diego, California 92101

619 239-2353
FAX 619 239-6227

President:
Gordon R. Corder, Architect
Director of Design:
Robert L. Davis, Jr., Architect

JUSTICE CENTER
COUNTY OF SAN DIEGO
PROJECT NUMBER 1400005

CMT

ISSUES CONSTRUCTION SET

DATE 10/23/04
PROJECT NO. 94-353
DRAWN
CHECKED
FILE NO.

FOURTH FLOOR HVAC PLAN

M2.4

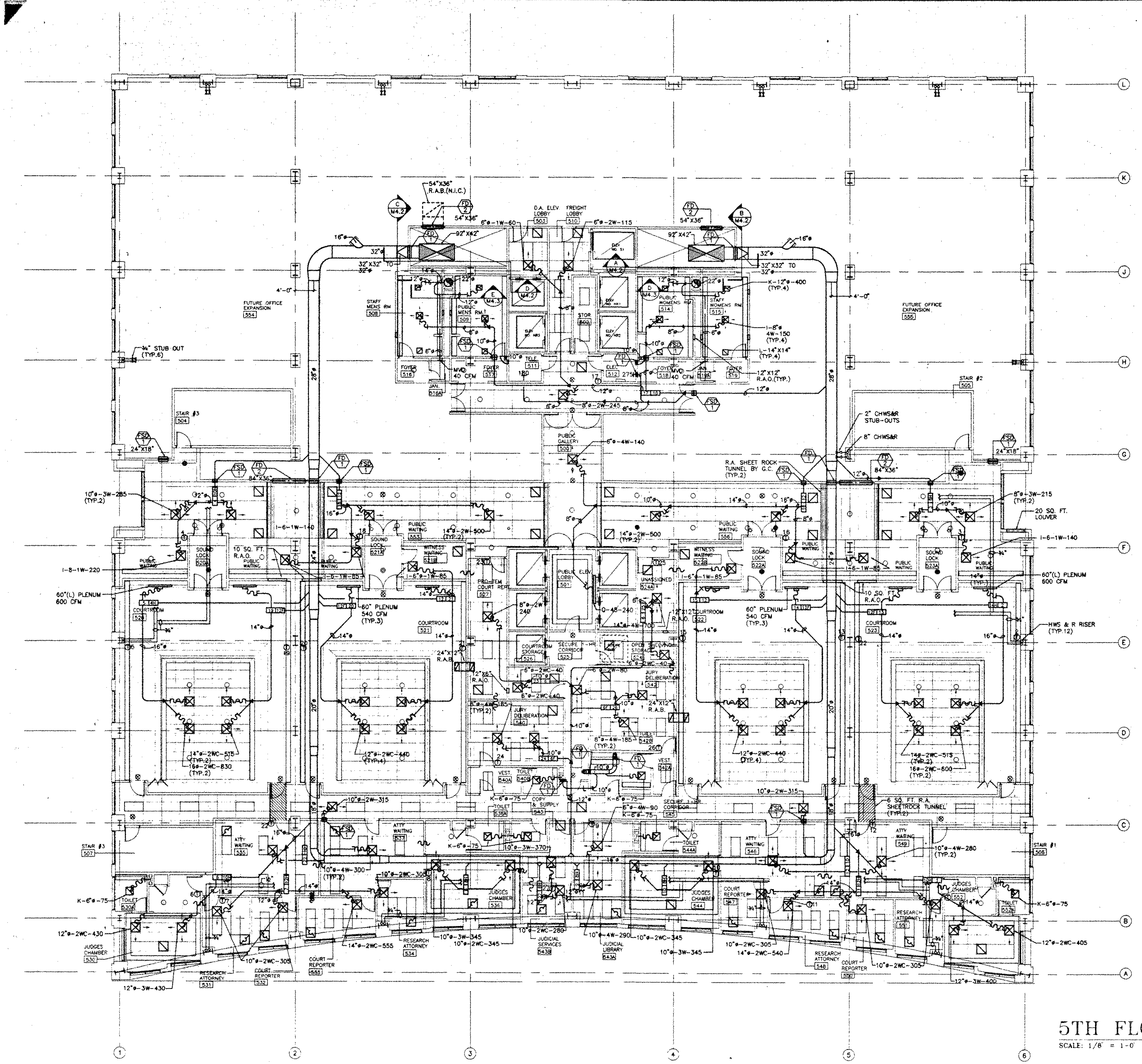

5TH FLOOR PLAN

SCALE: 1/8" = 1'-0"   F.F. ELEVATION +80'-0"

NORTH

VAV BOX SCHEDULE

ZONE #	BOX SIZE	HEAT GPM	CFM (MAX)	CFM (MIN)
1	10H	1.0	805	240
2	14H	1.5	1800	540
3	8H	.75	570	170
4	10H	.75	790	190
5	14H	1.5	2260	590
6	10H	1.0	860	245
7	12H	1.5	1470	440
8	8H	.75	690	210
9	8H	.75	380	170
10	8H	.75	690	210
11	12H	1.5	1455	435
12	10		560	185
13	12F		1570	165
14	12F		1420	150
15	12		1505	180
16	12		1550	300
17	10		775	105
18	12		1170	225
19	12F		1570	165
20	12F		1420	135
21	12		1505	300
22	10		915	195
23	6		280	50
24	6F		185	60
25	6		740	40
26	6F		450	90
27	8H		650	45

BSHA
Architecture
Planning
Interior Design
Engineering
919 Fourth Avenue
Suite 200
San Diego, California 92101
President:
Gordon R. Carrier, Architect
Director of Design:
Robert L. Davis, Jr., Architect

JUSTICE CENTER
COUNTY OF SAN DIEGO
PROJECT NUMBER A9091E

CMI
These drawings and specifications have been prepared by CMI for their exclusive use in accord with Sec. 6735.4 of the Professional Engineers Act of the State of California.

ISSUES: CONSTRUCTION SET 1

DATE 11/23/94
PROJECT NO. 93-593
DRAWN
CHECKED
FILE NO.

FIFTH FLOOR HVAC PLAN

M2.5

ALL IDEAS, DESIGN, ARRANGEMENTS AND PLANS INDICATED OR REPRESENTED BY THIS DRAWING ARE OWNED BY, AND THE PROPERTY OF, BNIM, INC. AND WERE CREATED, EVOLVED AND DEVELOPED FOR USE ON, AND IN CONNECTION WITH THIS PROJECT. NONE OF SUCH IDEAS, DESIGN, ARRANGEMENTS OR PLANS SHALL BE USED BY, OR DISCLOSED TO ANY PERSON, FIRM, OR CORPORATION FOR ANY PURPOSE WHATSOEVER WITHOUT THE WRITTEN PERMISSION OF BNIM, INC. FILING THESE DRAWINGS OR SPECIFICATIONS WITH ANY PUBLIC AGENCY IS NOT A PUBLICATION OF SAME. NO COPYING, REPRODUCTION OR USE THEREOF IS PERMISSIBLE WITHOUT THE CONSENT OF BNIM, INC.

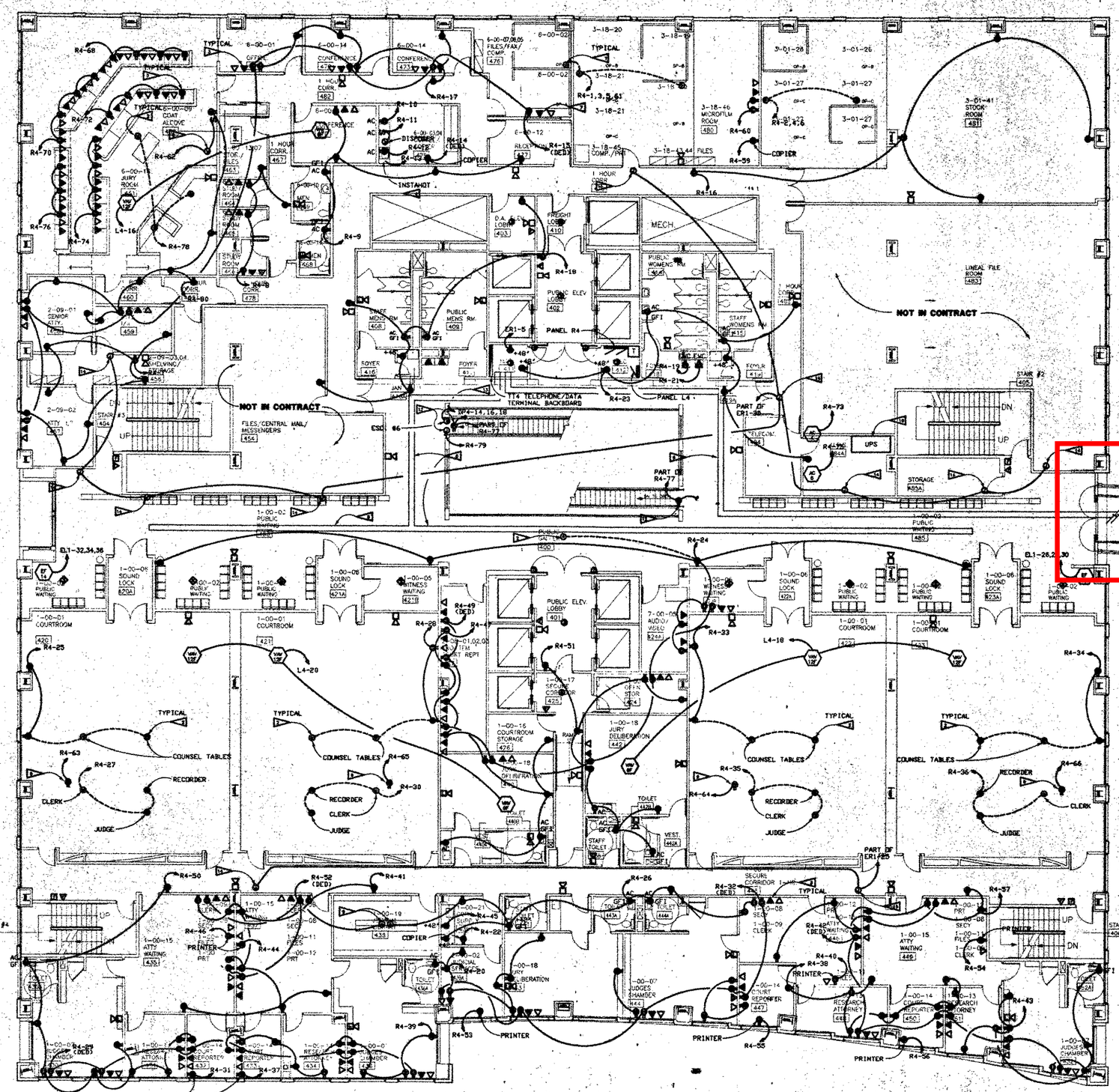

AFTER DEMOLITION OF EXISTING BRIDGE. DEVELOPER TO IMPLEMENT ELECTRICAL SYSTEM REVISIONS COMPATIBLE WITH EXISTING ELECTRICAL SYSTEM.

DRAWING NOTES:

- PROVIDE HUBBELL PT73FF# POKE THROUGH FLOOR PENETRATION FOR POWER/TELEPHONE/DATA CONNECTION FOR FURNITURE WALL SYSTEM. COORDINATE LOCATIONS WITH FURNITURE LAYOUT. COORDINATE COLOR.
- PROVIDE A HUBBELL PT7F# SERIES POKE THROUGH FLOOR PENETRATIONS WITH DUPLEX RECEPTACLE AND TELEPHONE/DATA ACCESS. COORDINATE LOCATION WITH ARCHITECT AND LARGE SCALE FLOOR PLANS. COORDINATE COLOR.
- WHERE TWO (2) DUPLEX RECEPTACLES ARE SHOWN ADJACENT TO TELEPHONE AND DATA OUTLETS, PROVIDE A FOURPLEX COVERPLATE FOR THESE RECEPTACLES. THE DUPLEX RECEPTACLE CONNECTED TO THE DEDICATED CIRCUIT (DED) SHALL BE FURNISHED IN BLUE. THE OTHER DUPLEX TO BE STANDARD COLOR. MOUNT THE DEDICATED RECEPTACLE ON THE SIDE CLOSEST TO THE TELEPHONE/DATA OUTLETS.
- PROVIDE 120V, 20A CONNECTION TO INSTA-HOT WATER HEATER. COORDINATE WITH MECHANICAL CONTRACTOR.
- PROVIDE 12" WIDE CABLE TRAY ABOVE CEILING AS INDICATED.
- PROVIDE 24" WIDE CABLE TRAY ABOVE CEILING AS INDICATED.
- MOUNT RECEPTACLES, TELEPHONE/DATA OUTLETS UNDER COUNTER AND ROUTE CONDUIT CONCEALED IN CASEWORK. PROVIDE A HUBBELL #PT73FF# POKE THROUGH FLOOR PENETRATION. CONNECT RECEPTACLES TO POKE THROUGH WITH 3/4" FLEX CONDUIT. TELEPHONE/DATA CABLING WILL ROUTE THROUGH POKE THROUGH ACCESS. COORDINATE WITH CASEWORK SUPPLIER.
- PROVIDE CONNECTION TO MOTORIZED PROJECTION SCREEN AND WALL CONTROL SWITCH. SCREEN AND SWITCH FURNISHED BY OTHERS. COORDINATE LOCATION WITH ARCHITECT.
- PROVIDE DUPLEX RECEPTACLES ADJACENT TO PNEUMATIC TUBE STATION. COORDINATE LOCATION WITH TUBE INSTALLER.
- PROVIDE A 125 KVA UPS UNIT AT THIS LOCATION. UNIT TO BE EQUIPPED WITH FIFTEEN (15) MINUTE BATTERY BACKUP. SYSTEM VOLTAGE: 120/208V, 3 PHASE, 4 WIRE OUTPUT WITH ONE (1) 100ASP AND ONE (1) 300ASP OUTPUT BREAKERS. RE: E3.1 ELECTRICAL ONE LINE DIAGRAM.
- PROVIDE TWO (2) HUBBELL PT7F# SERIES POKE THROUGH FLOOR PENETRATIONS WITH DUPLEX RECEPTACLE AND TELEPHONE/DATA ACCESS. COORDINATE LOCATION WITH ARCHITECT. COORDINATE COLOR.
- LOCATE RECEPTACLE IN ESCALATOR PIT AS DIRECTED BY ESCALATOR SUPPLIER. PROVIDE CONNECTION TO ESCALATOR LIGHTS AND CONTROLS AS INDICATED BY JUNCTION BOX CONNECTION.
- ESCALATOR MOTOR CONNECTION. PROVIDE 3 #10 - 1/2" CONDUIT TO ESCALATOR DISCONNECT FROM PANEL INDICATED.
- PROVIDE CONNECTION TO FIRE/SMOKE DAMPER ACTUATOR. ACTUATOR FURNISHED BY MECHANICAL CONTRACTOR. COORDINATE LOCATION.

4TH FLOOR POWER PLAN

SCALE: 1/8" = 1-0"

NORTH

JUSTICE CENTER
COUNTY OF SAN DIEGO
PROJECT NUMBER: 1000230 G

4TH FLOOR POWER PLAN

E1.4

ALL IDEAS, DESIGN, ARRANGEMENTS AND PLANS INDICATED OR REPRESENTED BY THIS DRAWING ARE OWNED BY, AND THE PROPERTY OF, BSHA, INC., AND WERE CREATED, EVOLVED AND DEVELOPED FOR USE ON, AND IN CONNECTION WITH THIS PROJECT. NONE OF SUCH IDEAS, DESIGN, ARRANGEMENTS OR PLANS SHALL BE USED BY, OR DISCLOSED TO ANY PERSON, FIRM, OR CORPORATION FOR ANY PURPOSE WHATSOEVER WITHOUT THE WRITTEN PERMISSION OF BSHA, INC. FILING THESE DRAWINGS OR SPECIFICATIONS WITH ANY PUBLIC AGENCY IS NOT A PUBLICATION OF SAME. NO COPYING, REPRODUCTION OR USE THEREOF IS PERMISSIBLE WITHOUT THE CONSENT OF BSHA, INC.

DRAWING NOTES:

PROVIDE 24" WIDE CABLE TRAY ABOVE CEILING AS INDICATED.

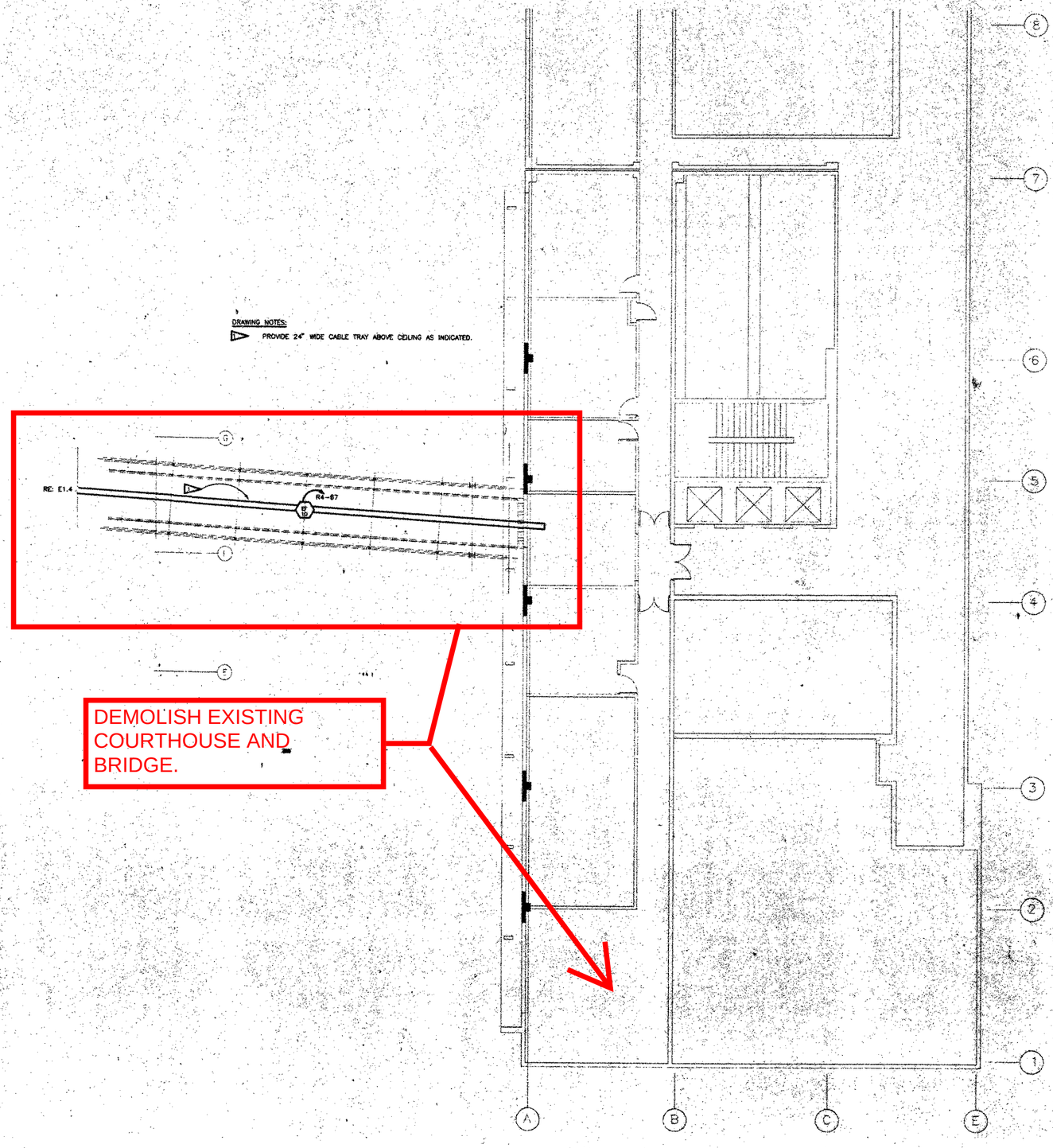

EXISTING BUILDING 4TH FLOOR POWER PLAN

SCALE: 1/8" = 1-0"

NORTH

BSHA
Architecture
Planning
Interior Design
Engineering
910 Fourth Avenue
Suite 300
San Diego, California 92101
619 239-2355
FAX 619 239-4027
Principals:
Carlton B. Carter, Architect
Director of Design:
Robert L. Sims, Jr., Architect

JUSTICE CENTER
COUNTY OF SAN DIEGO
PROJECT NUMBER 1008175

DATE 7-01-98
PROJECT NO. 2931.00
DRAWN A.E.P.
CHECKED G.B.C.
FILE NO.

EXISTING BUILDING 4TH FLOOR POWER PLAN

E1.4A

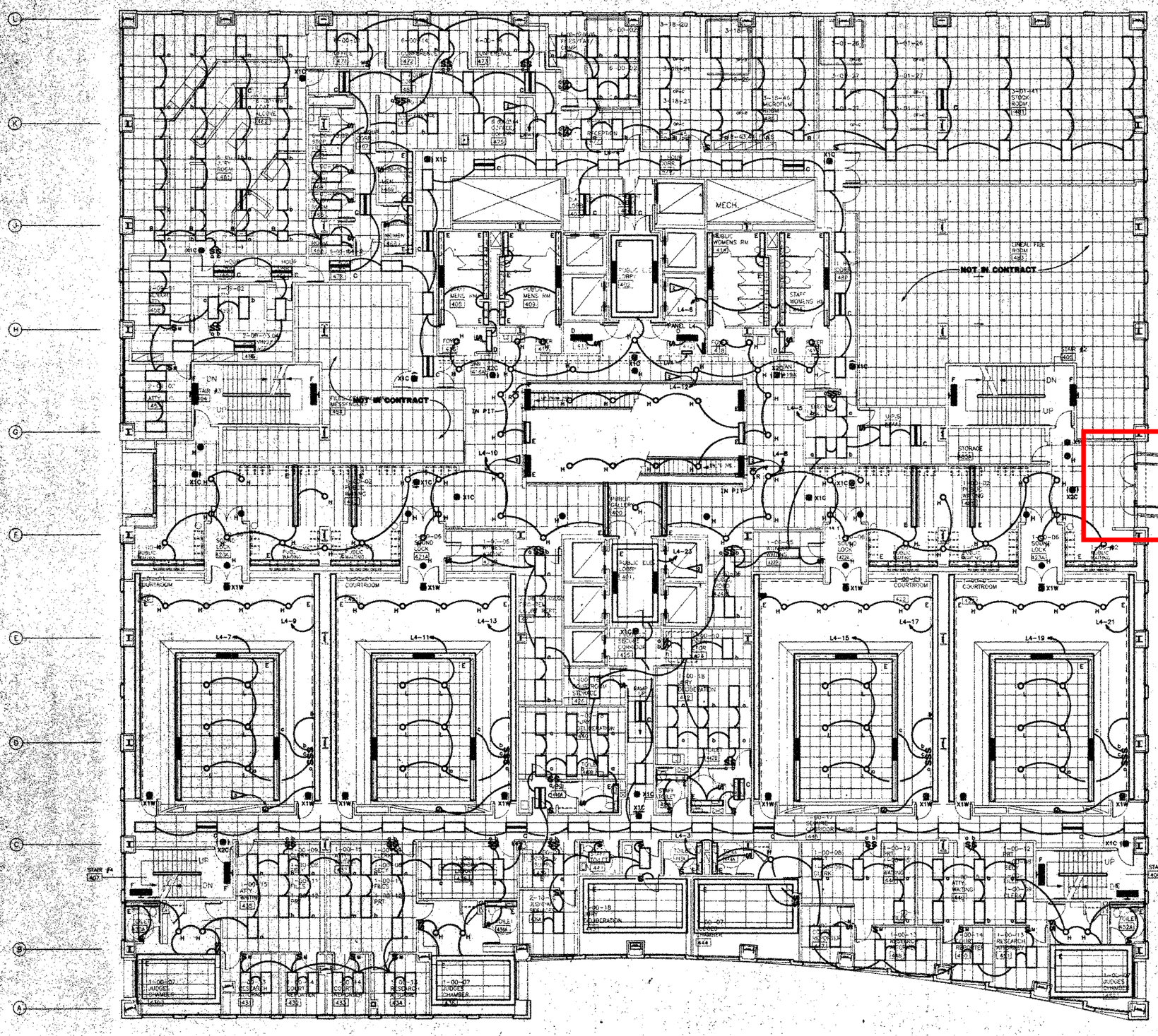

DRAWING NOTES:

△ INDICATES 2-LEVEL SWITCHING. REFER TO SUBSCRIPT LETTERS FOR SWITCHING ASSIGNMENT OF EACH LUMINAIRE.

△ THIS CIRCUIT IS CONTROLLED VIA LOW VOLTAGE RELAY. REFER TO LOW VOLTAGE LIGHTING CONTROL RELAY SCHEDULE.

△ VERTICAL LIGHTING COVE WITH TYPE E LUMINAIRES. PROVIDE QUANTITY AS REQUIRED TO UNIFORMLY ILLUMINATE COVE. CIRCUIT WITH PERIMETER COVE LUMINAIRES.

GENERAL NOTES:

1 ALL FIXTURES ARE TYPE A UNLESS OTHERWISE NOTED.

2 CONNECT ALL EXIT LIGHTS AND SHADED FIXTURES TO 277V EMERGENCY LIGHTING CIRCUIT EL1-7 UNLESS OTHERWISE NOTED.

3 CONNECT STAIR TOWER LUMINAIRES TO EMERGENCY CIRCUITS AS FOLLOWS:

STAIR TOWER #1 - EL1-2
STAIR TOWER #2 - EL1-4
STAIR TOWER #3 - EL1-6
STAIR TOWER #4 - EL1-8

4 PROVIDE SEPARATE NEUTRALS FOR ALL LIGHTING CIRCUITS WHICH SERVE ELECTRONIC BALLASTS.

AFTER DEMOLITION OF EXISTING BRIDGE. DEVELOPER TO IMPLEMENT LIGHTING SYSTEM REVISIONS COMPATIBLE WITH EXISTING LIGHTING / ELECTRICAL SYSTEM.

4TH FLOOR LIGHTING PLAN

SCALE: 1/8" = 1-0"

NORTH

JUSTICE CENTER
COUNTY OF SAN DIEGO
PROJECT NUMBER AQ091K

4TH FLOOR LIGHTING PLAN

E2.4

ALL IDEAS, DESIGNS, ARRANGEMENTS AND PLANS INDICATED OR REPRESENTED BY THIS DRAWING ARE OWNED BY, AND THE PROPERTY OF BORA, INC. AND WERE CREATED, EVALUATED AND DEVELOPED FOR USE ON, AND IS CONNECTION WITH THIS PROJECT. NONE OF THOSE IDEAS, DESIGNS, ARRANGEMENTS OR PLANS SHALL BE USED BY, OR DISCLOSED TO, ANY PERSON, FIRM, OR CORPORATION FOR ANY PURPOSE WHATSOEVER WITHOUT THE WRITTEN PERMISSION OF BORA, INC. PLANS, TITLE DRAWINGS OR SPECIFICATIONS MAY NOT BE REPRODUCED IN ANY FORM WITHOUT PRIOR WRITTEN PERMISSION OF BORA, INC. REPRODUCTION OF THIS DRAWING IS PROHIBITED WITHOUT THE CONSENT OF BORA, INC.

ALL IDEAS, DESIGNS, ARRANGEMENTS AND PLANS INDICATED OR REPRESENTED BY THIS DRAWING ARE OWNED BY, AND THE PROPERTY OF, BOMA, INC., AND WERE CREATED, EVOLVED AND DEVELOPED FOR USE ON, AND IN CONNECTION WITH THIS PROJECT. NONE OF SUCH IDEAS, DESIGNS, ARRANGEMENTS OR PLANS SHALL BE USED BY, OR DISCLOSED TO ANY PERSON, FIRM, OR CORPORATION FOR ANY PURPOSE WHATSOEVER WITHOUT THE WRITTEN PERMISSION OF BOMA, INC. PLANS THESE DRAWINGS OR SPECIFICATIONS WITH ANY PUBLIC AGENCY IS NOT A PUBLICATION OF SAME. NO COPYING, REPRODUCTION OR USE THEREOF IS PERMISSIBLE WITHOUT THE CONSENT OF BOMA, INC.

DRAWING NOTES:

1. CONNECT TO 4TH FLOOR LOBBY LIGHTING CIRCUIT. RE: E2.4.

GENERAL NOTES:

1. CONNECT CENTER LAMP OF TYPE C FIXTURES TO CIRCUIT EL1-7.
2. PROVIDE SEPARATE NEUTRALS FOR ALL LIGHTING CIRCUITS WHICH SERVE ELECTRONIC BALLASTS.

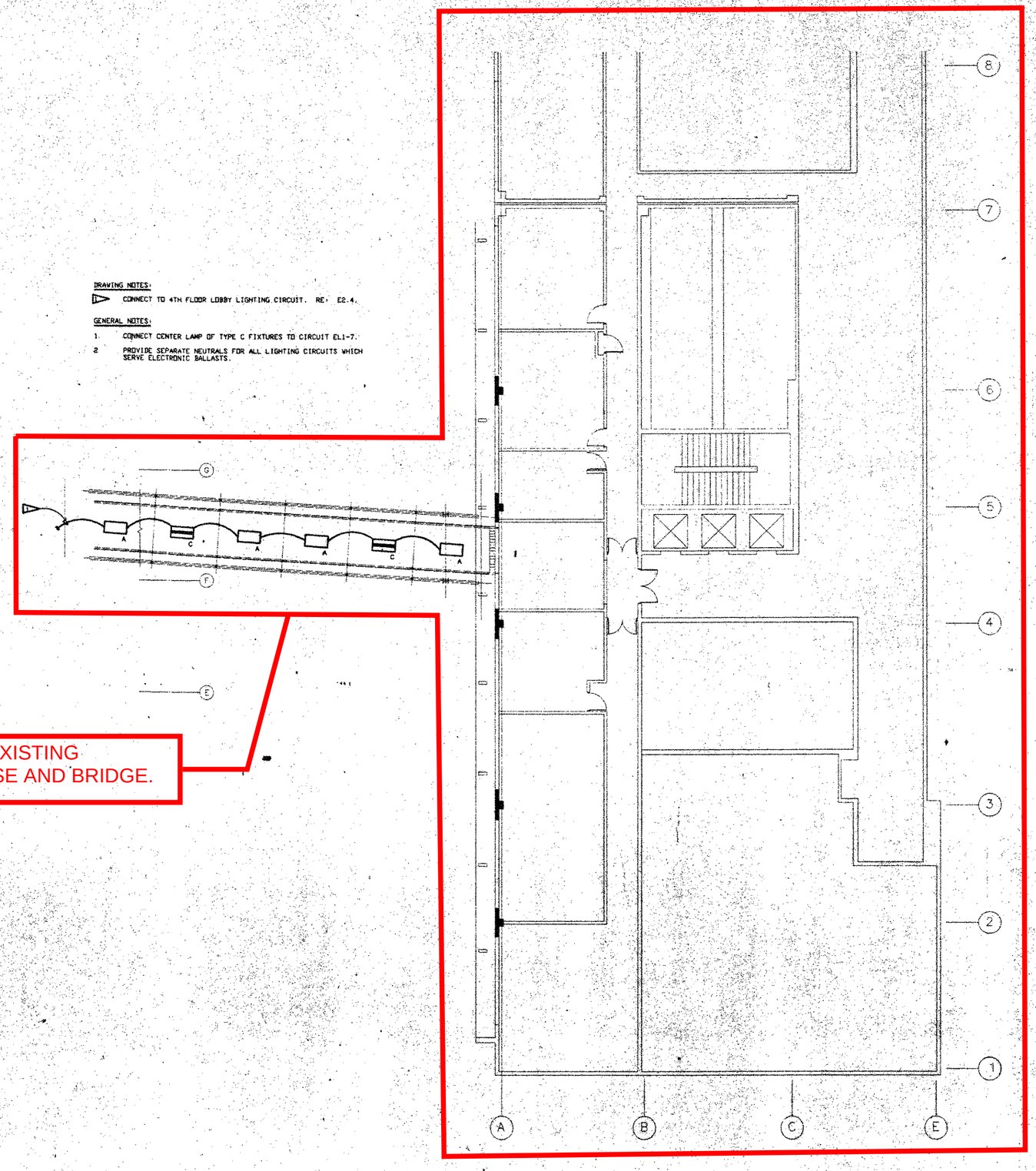

DEMOLISH EXISTING COURTHOUSE AND BRIDGE.

EXISTING BUILDING
4TH FLOOR LIGHTING PLAN

SCALE: 1/8" = 1-0"

NORTH

BOMA

Architecture
Planning
Interior Design
Engineering

910 Fourth Avenue
Suite 200
San Diego, California 92101

619 239-2262
FAX 619 236-0277

President
Gordon S. Carter, Architect
Director of Design
Robert L. Burk, Jr., Architect

JUSTICE CENTER
COUNTY OF SAN DIEGO
PROJECT NUMBER A0091K

DATE	REVISION	DRAWN	CHECKED
7-15-99	ISSUED FOR CONSTRUCTION		
2-11-98		A.P.	G.S.C.

EXISTING BUILDING 4TH FLOOR LIGHTING PLAN

E2.4A

80

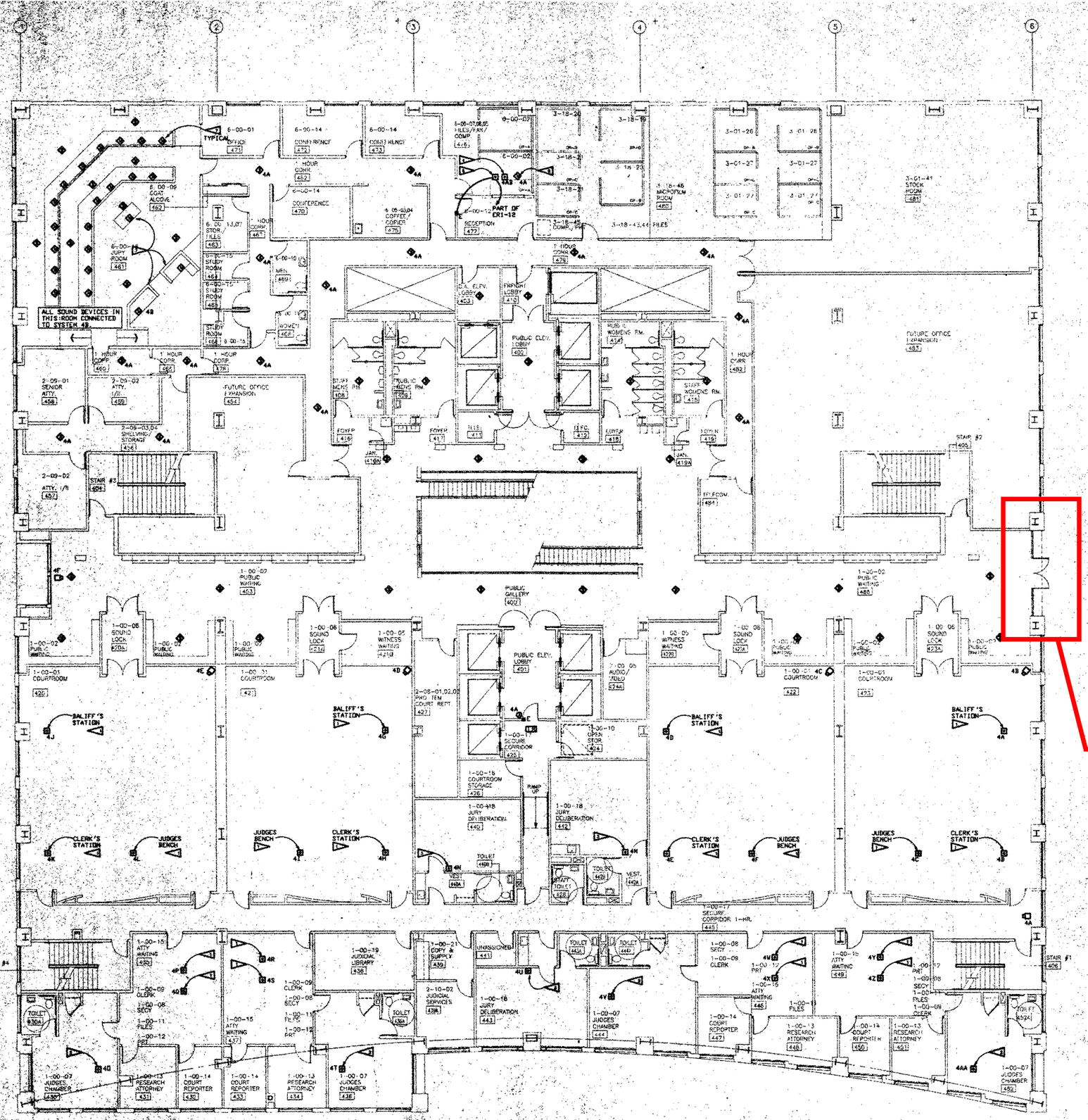

DRAWING NOTES:

- DURESS ALARM PUSHBUTTON. LOCATE PUSHBUTTON ON CASEWORK. ROUTE WIRING TO FLOOR BOX PROVIDED FOR POWER/COMMUNICATIONS. ROUTE WIRING IN COMMUNICATIONS RACEWAY.
- DURESS ALARM PUSHBUTTON. LOCATE PUSHBUTTON ON DESK. ROUTE WIRING TO FLUSH WALL BOX WITH GROMMETED PLATE. EXTERIOR 3/4" CONDUIT UP TO ACCESSIBLE CEILING SPACE FOR WIRING.
- PROVIDE FLUSH MOUNTED DURESS ALARM MOUNTED AT +48" ABOVE FINISHED FLOOR.
- DURESS ALARM PUSHBUTTON. LOCATE PUSHBUTTON ON CASEWORK. ROUTE WIRING IN FLEX CONDUIT TO A WALL BOX AND EXTEND 3/4" CONDUIT UP TO ACCESSIBLE CEILING.
- ELECTRIC DOOR RELEASE. PROVIDE PUSHBUTTON CONTROL OF ELECTRIC DOOR STRIKE AS SHOWN. DOOR STRIKE PROVIDED BY DOOR HARDWARE SUPPLIER. COORDINATE VOLTAGE AND PROVIDE LOW VOLTAGE TRANSFORMER AS REQUIRED. PUSHBUTTON TO BE FLUSH MOUNTED IN CASEWORK. PROVIDE CONDUIT ACCESS IN WALL UP TO CEILING SPACE. PUSHBUTTON TO BE APPROXIMATELY 1" DIAMETER WITH BLACK BUTTON. SWITCH WILL MAKE CONTRACT ONLY AS LONG AS BUTTON IS DEPRESSED.
- LOCAL PUBLIC ADDRESS MICROPHONE LOCATED ON COUNTER TOP. EXTEND WIRE TO A WALL BOX WITH GROMMETED PLATE AND ROUTE IN 3/4" CONDUIT TO ACCESSIBLE CEILING.
- LOCAL PUBLIC ADDRESS MICROPHONE LOCATED ON COUNTER TOP. EXTEND WIRE TO FLOOR BOX COMMUNICATION COMPARTMENT. EXTEND WIRING THROUGH COMMUNICATION RACEWAY TO ACCESSIBLE CEILING.

AFTER DEMOLITION OF EXISTING BRIDGE. DEVELOPER TO IMPLEMENT COMMUNICATION SYSTEM REVISIONS COMPATIBLE WITH EXISTING COMMUNICATION SYSTEM

4TH FLOOR COMMUNICATIONS PLAN

SCALE: 1/8"=1'-0"

NORTH

JUSTICE CENTER
COUNTY OF SAN DIEGO
PROJECT NUMBER A0015

FOURTH FLOOR COMMUNICATIONS PLAN

E5.4

ALL IDEAS, DESIGN, ARRANGEMENTS AND PLANS INDICATED OR REPRESENTED BY THIS DRAWING ARE OWNED BY, AND THE PROPERTY OF, BSHA, INC. AND WERE CREATED, EVOLVED AND DEVELOPED FOR USE ON, AND IN CONNECTION WITH THIS PROJECT. NONE OF SUCH IDEAS, DESIGN, ARRANGEMENTS OR PLANS SHALL BE USED BY, OR DISCLOSED TO ANY PERSON, FIRM, OR CORPORATION FOR ANY PURPOSE WHATSOEVER WITHOUT THE WRITTEN PERMISSION OF BSHA, INC. FILING THESE DRAWINGS OR SPECIFICATIONS WITH ANY PUBLIC AGENCY IS NOT A PUBLICATION OF SAME. NO COPYING, REPRODUCTION OR USE THEREOF IS PERMISSIBLE WITHOUT THE CONSENT OF BSHA, INC.

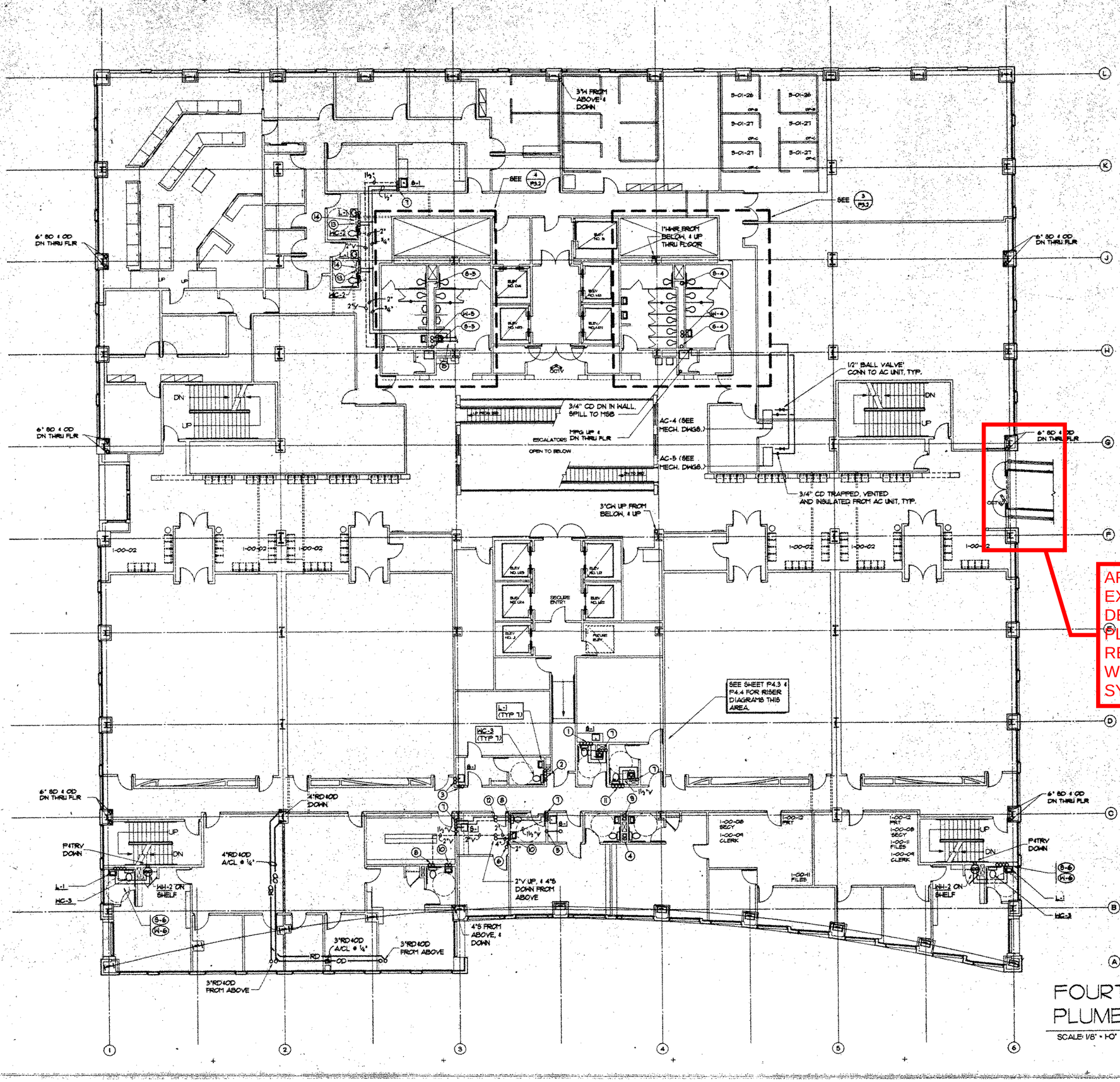

PLAN NOTES:

1. CONNECT TOILET & SINK TO HW, CW, SEWER & VENT RISERS IN WALL. (SEE RISER DIAGRAMS ON SHEET P4.3 & P4.4 FOR BRANCH SIZES).
2. CONNECT TOILET & LAV TO HW, CW, SEWER & VENT RISERS IN WALL. (SEE RISER DIAGRAMS ON SHEET P4.3 & P4.4 FOR BRANCH SIZES).
3. CONNECT SINK TO HW, CW, WASTE & VENT RISERS IN WALL. (SEE RISER DIAGRAMS ON SHEET P4.3 & P4.4 FOR BRANCH SIZES).
4. CONNECT (2)TOILETS & (2)LAVS TO SEWER & VENT RISERS IN WALL. (SEE RISER DIAGRAMS ON SHEET P4.3 & P4.4 FOR BRANCH SIZES).
5. ½"HWC PIPE DOWN IN WALL TO CP-2 AT 3rd FLOOR.
6. SEWER / WASTE PIPE DOWN FROM PLUMBING FIXTURE ON FLOOR ABOVE.
7. ½"HWCW DOWN IN WALL TO SINK OR LAV.
8. CONNECT TOILET & LAV TO SEWER & VENT RISERS IN WALL. (SEE RISER DIAGRAMS ON SHEET P4.3 & P4.4 FOR BRANCH SIZES).
9. CONNECT (2)TOILETS & (2)LAVS TO HW & CW RISERS IN WALL. (SEE RISER DIAGRAMS ON SHEET P4.3 & P4.4 FOR BRANCH SIZES).
10. CONNECT TOILET & LAV TO HW & CW RISERS IN WALL. (SEE RISER DIAGRAMS ON SHEET P4.3 & P4.4 FOR BRANCH SIZES).
11. CONNECT TOILET TO CW, SEWER & VENT RISERS IN WALL. (SEE RISER DIAGRAMS ON SHEET P4.3 & P4.4 FOR BRANCH SIZES).
12. HOT & COLD WATER PIPES UP TO PLUMBING FIXTURES ABOVE. (SEE RISER DIAGRAMS ON SHEET P4.3 & P4.4 FOR BRANCH SIZES).
13. 1½"CW & ½"HW DOWN TO HC-2 & L-1. (CONNECT WATER HAMMER ARRESTER TO CW PIPE & PROVIDE ACCESS PANEL).
14. 2" WASTE & 1½" VENT PIPES IN WALL.
15. ALL HOT & COLD WATER PIPE CONNECTIONS SHALL BE MADE DOWNSTREAM OF THE ISOLATION VALVES WHICH ARE SHOWN ON THE ¼" SCALE TOILET ROOM PLANS. COORDINATE ALL PIPING CONNECTIONS FROM THIS FLOOR PLAN, WITH THE ASSOCIATED ¼" SCALE PLANS.

AFTER DEMOLITION OF EXISTING BRIDGE. DEVELOPER TO IMPLEMENT PLUMBING SYSTEM REVISIONS COMPATIBLE WITH EXISTING PLUMBING SYSTEM

FOURTH FLOOR PLUMBING PLAN

SCALE: 1/8" = 1'-0"

FF ELEVATION +78'- 6"

NORTH

BSHA
Architecture
Planning
Interior Design
Engineering
918 Fourth Avenue
Suite 200
San Diego, California 92101
619 239-2353
FAX 619 239-4527
President
Gordon R. Carter, Architect
Director of Design
Robert L. Dorne, Jr., Architect

ASTRO
MECHANICAL CONTRACTORS, INC.
600 S. Marshall Ave., El Cajon, CA 92020
(619) 442-0880 FAX (619) 442-3882
Lic. No. 307286

BECHARD & ASSOCIATES, INC.
CONSULTING ENGINEERS
10930 Treena Street
Suite 300
San Diego
CA 92131-2427
(619) 578-2881

JUSTICE CENTER
COUNTY OF SAN DIEGO

03/17/2008

FOURTH FLOOR PLUMBING PLAN

P2.4