San Diego Regional Public Safety Geodatabase

Unified Disaster Council Ad-hoc Project to Program Recommendations Report

3/11/2014

1. Executive Summary 2
2. Objective 4
3. Approach 5
4. Outcomes 5
Unified San Diego Emergency Services Agreement 5
Advisory Committee 6
Working Group 7
Role of City of San Diego 7
Current Project Effort 7
Role of Unified Disaster Council 9
Program Cost 12
Personnel Cost 13
Administrative Support 13
Capital Equipment Replacement 13
Cloud Services, Software licenses and Connectivity Expenses 14
Estimated Annual Budget 14
Program Funding Sources 14
Grant Funding 14
Member Assessments 15
User Fees 15
Service Delivery Options 15
Contract Project Management 15
Contract GIS Professional and Technical Services 15
Agency Employees 16
Timing for Assuming Governance 16
5. Recommendations 17
6. Benefits to the San Diego Region 18

1. Executive Summary

Over the last decade, the San Diego Urban Area has enhanced its capability to prevent, protect, mitigate, respond to and recover from acts of terrorism or natural disasters. This has been accomplished through a variety of funding sources with the Department of Homeland Security Urban Area Security Initiative (UASI) being the primary source of funding for regional projects. Many of these enhanced capabilities have involved large complex regional projects, engaging multiple stakeholders.

The Regional Public Safety Geodatabase (RPSG) is one of those projects that have been implemented to improve the regions capability. The objective of the San Diego Regional Public Safety Geodatabase Project is to provide an emergency response GIS system that can be used by Fire, EMS, Emergency Management and Law Enforcement agencies in a recognized standard throughout the region for public safety operations.

The key accomplishments of the project include:

- ✓ Created a master public safety geodatabase – regional schema
- ✓ Created a single repository for the public safety geodatabase – server located at Chula Vista

- ✓ Created change model process for making changes to the database
- ✓ Created regional template for target hazard plans
- ✓ Provided regional aerial imagery
- ✓ Completed 2000 high priority target hazard plans utilizing regional template
- ✓ Created regional template for Wildland Urban Interface Fire Emergency Response Plans
- ✓ Created common emergency response map book
- ✓ Developed street centerline data and address network that supports computer aided dispatch for emergency response routing

To accomplish these enhancements, a variety of operational, technical and executive steering committees have been utilized. No formal governance, such as a Memorandum of Understanding, has been developed during this project phase. If the UASI region wants to retain these enhanced core capabilities, a long term formal governance and sustainment model must be identified.

At the August 2013 meeting, the Unified Disaster Council (UDC) membership voted to further evaluate the concept of transitioning the RPSG from a project to a program with governance provided through the Unified San Diego County Emergency Services Agreement. The UDC further supported the creation of an ad-hoc committee with representation from law enforcement, fire services and emergency managers to evaluate the options for transitioning.

In evaluating the concept of the UDC assuming the role of long term governance, several key questions were identified. They included an evaluation of the current Joint Powers Agreement purpose, committee representation, the role of the City of San Diego, current and future project effort requirements, program expenses, funding sources, service delivery models and the benefits of the UDC assuming the governance role.

In order to evaluate those questions, an ad-hoc committee from the UDC membership was assembled. This ad-hoc committee included representation from County Office of Emergency Services, City of San Diego Office of Homeland Security and at large members from law enforcement and fire services.

The outcome of that analysis includes the following recommendations:

1. Designate the Unified San Diego Emergency Services Agreement and the Unified Disaster Council as the appropriate method for providing long term governance for the RPSG.
2. Create a multidisciplinary advisory committee with subject matter stakeholders to advise the Unified Disaster Council regarding policy and funding recommendations.
3. The City of San Diego Office of Homeland Security should continue to manage the UASI grant funding and existing contractual agreements to support the program.

4. In the short term, continue to utilize existing contractor services to manage and develop the project.
5. In the long term, the UDC should assume the lead in determining how to provide program management and staffing at the regional level.
6. If possible, continue to utilize grant funding to support the program management, administrative support and equipment costs.
7. If grant funding is not available, may need to identify member assessments and user fees as potential funding mechanisms.
8. The UDC should assume the role of governance on July 1, 2014.

Accepting the role of formal governance does not commit the UDC membership to any general fund member assessment costs. Any cost associated with utilizing member assessments as a funding source would be subject to budget adoption by the full membership at a later date.

The UASI Region has committed significant financial resources towards the development and implementation of the RPSG. In order to maintain this capability, a long term solution for governance needs to be identified. The benefits of the UDC assuming the role of formal governance includes:

- ✓ Provides a legal entity for forming policy and budget.
- ✓ Allow intergovernmental agreements.
- ✓ Provides a formal regional structure, roles and responsibilities.
- ✓ Supports regionalized multidisciplinary efforts.
- ✓ Provides a mechanism for procurement of services.
- ✓ Provides a mechanism for sustaining the capability.

2. Objective

The objective of this report is to determine if the UDC should assume the role of providing formal governance and the long term sustainment plan for the RPSG.

The critical questions for this objective include:

1. Does the Unified San Diego Emergency Services Agreement provide the appropriate governance structure for this project?
2. Should there be a committee designated to serve an advisory role on policy and funding to the full membership? What would the membership of that committee be?
3. What would the role of the City of San Diego Office of Homeland Security be? How does the UASI funding fit in?
4. What is the current project effort level in the region? How long will that level of effort be needed to meet the project objectives?
5. What is the estimated cost for a program under the UDC?
6. What are the program funding sources?

7. What methods are available to provide services in the short term and long term?
8. What level of effort and role should the UDC play?
9. What are the benefits of the UDC assuming the role of formal governance?

3. Approach

In the spring of 2013, an evaluation of the key considerations and options for transitioning the RPSG to a program was performed. Based on that analysis, a recommendation to consider the UDC as a solution for long term governance was presented to the Regional Technology Partnership (RTP). Based on the information presented, the RTP supported the concept and recommended a presentation of the concept to the full UDC membership to verify support for the concept and to create an ad-hoc committee to evaluate the options for transitioning the RCIP to a program within the UDC. At the August 2013 UDC meeting, the membership voted to further evaluate the concept.

Subsequent to the UDC action, an ad-hoc committee was established to evaluate the issues related to transitioning from a project to program. The ad-hoc committee consisted of the following members of the UDC:

- County of San Diego Office of Emergency Services – Holly Crawford
- City of San Diego Office of Homeland Security – John Valencia
- City of La Mesa – Police Chief Ed Aceves
- City of Lemon Grove – Deputy Fire Chief Tim Smith
- City of Vista – Fire Chief Rick Minnick

This ad-hoc committee met several times to discuss the issues related to this objective.

4. Outcomes

Unified San Diego Emergency Services Agreement

The Unified San Diego County Emergency Services Agreement provides a vehicle for program authority. This joint powers agreement creates the UDC as the decision making body. This agreement includes the following purpose;

> "*to coordinate and facilitate regional plans and programs for the preservation and safety of life and property, and to make provisions for the execution of plans, programs and mutual assistance in the event of multi-jurisdictional emergencies or disasters"*

This stated purpose of the UDC aligns very well with the regional, multi-jurisdictional execution of plans, programs and mutual assistance that is achieved through the RPSG. The UDC also provides a regional representation model that aligns very well with the current stakeholders in the project. The UDC membership consists of the 18 cities and the County of San Diego.

Advisory Committee

The RPSG project is currently managed by a project manager that works with a GIS Steering Committee. This steering committee is an informal governance structure that was created to assist with regional consensus building and project decisions. Because the primary stakeholders thus far have been the fire service, the committee was structured utilizing the four fire zones in the region. Each fire zone provides a representative from fire operations, GIS technical and a communications center. This created a committee of 12 representatives to steer the project. As a UASI funded project, the project manager reports to the RTP, this in turn serves an advisory role to the Urban Area Working Group, Unified Disaster Council and the SANDAG Public Safety Group.

Going forward, a multidisciplinary advisory committee should be created to advise the UDC on policy and funding issues. It is recommended that the advisory committee be composed of subject matter experts that would represent the key stakeholders. The recommended representation of the committee is:

- Law Enforcement Communications Centers (1 representatives)
- Fire Communications Centers (1 representatives)
- Law Enforcement Operations Command Staff (1 representative)
- Fire Service Operations Command Staff (1 representative)
- Emergency Managers Group (1 representative)

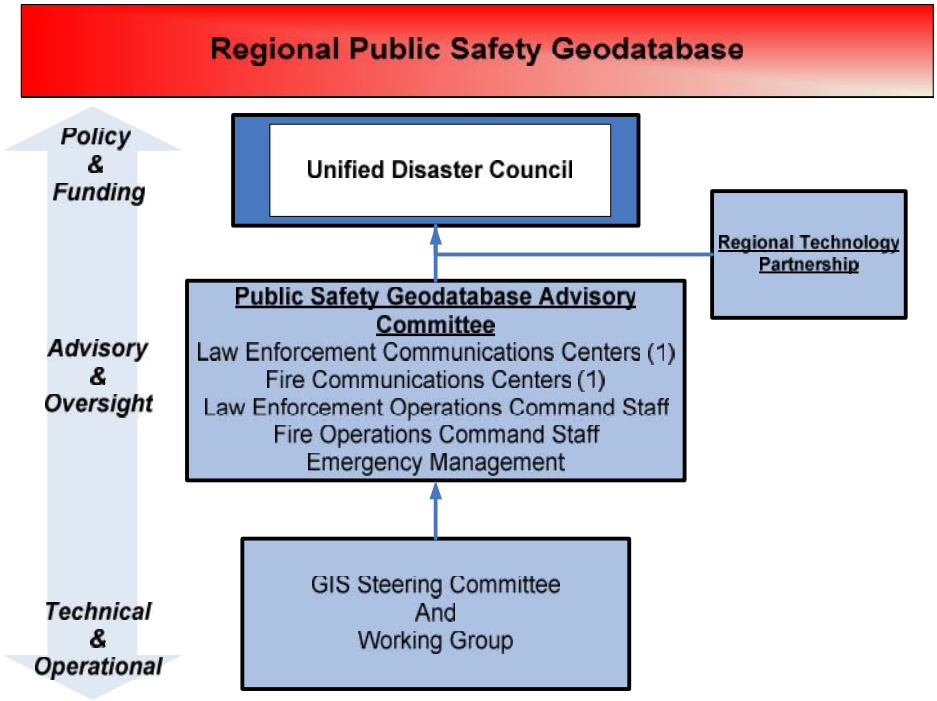

These positions could be filled through a couple of options. Option one would ask the UDC membership to provide representatives in each of the areas. Option two would involve asking the local fire and law enforcement associations to provide representatives. For example, the County Fire Chiefs Association could provide representation utilizing their communications or operations sections. Likewise, the Police and Sheriff Association could provide representatives through their sections.

The RTP would continue to serve in the role of vetting grant investment justifications regarding the RPSG. Those recommendations would continue to be provided to the UDC and the UAWG. Additionally, the RTP would continue to receive updates on the project.

Steering Committee and Working Group

The current steering committee and working group play an important role at the technical and operational level. It is at this level that key consensus building occurs to develop regional standards for the data. The current participation has primarily involved fire service representation. The objective to diversify the participation to law enforcement and emergency management will require additional discussion on what the most effective structure for consensus building would look like. The key to any proposed structure is to allow input and representation from the key stakeholders without creating a structure that is too large or cumbersome for allowing forward progress. It is recommended that the RPSG Advisory Committee provide direction on the make-up of the steering committee and working group.

Role of City of San Diego

The RPSG project has been primarily funded by the UASI grant program. The City of San Diego through their Office of Homeland Security is the lead for the region for this grant. In this role, the City of San Diego has provided the project management through a contract with LR Kimball and supported the sub-recipients in the region who have helped move this project along. Assuming that some level of grant funding will continue to be provided program management and staffing, the UDC will need to work closely with the City of San Diego to provide funding and program support through contractual agreements.

Current Project Effort

Currently the project is supported with 18 full time equivalent positions. These positions are primarily filled through contractual services with a variety of agencies. Each sub-recipient of grant funding has identified an approach that works for them. That includes using an approved vendor like Lynx Technologies, LR Kimball consulting services, hiring limited term GIS coordinators, interns or hiring limited term employees.

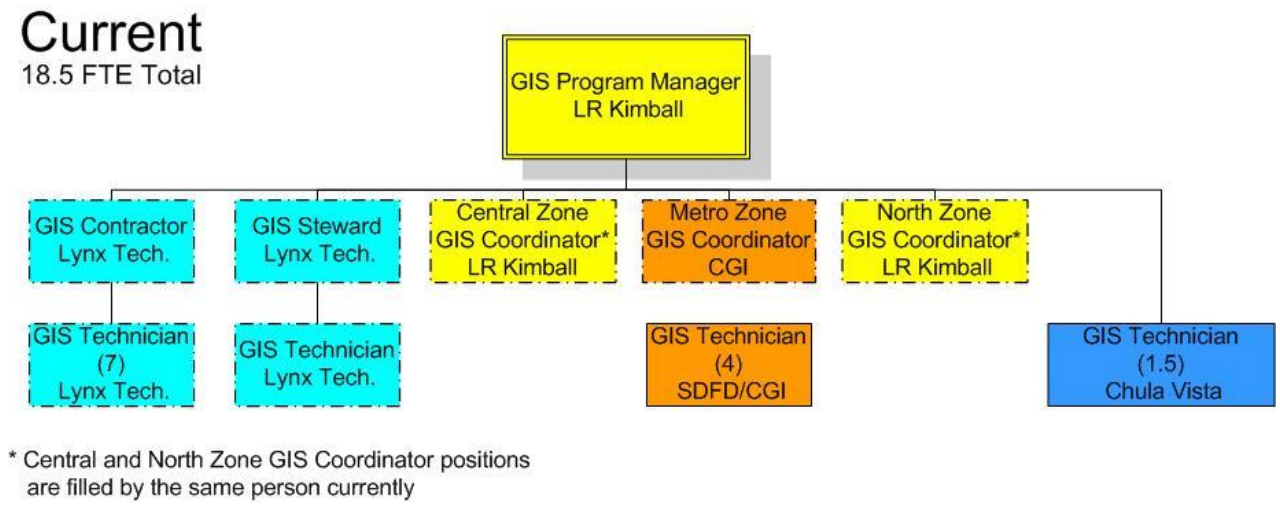

In order to meet the project objectives, the region will need to continue to provide significant staffing levels. The key remaining objectives include;

- Develop Cloud Services that will allow for web based distribution
- Develop web based services that can integrate with decision support systems such as:
    - WebEOC
    - SD LAW
    - ARJIS
    - Next Generation Incident Command
    - CAD Systems
    - Digital Sandbox
- Develop map viewers that will support:
    - Community Emergency Information Systems
    - Regional Resource Inventory
    - Target hazard plans
    - Wildland Urban Interface Fire Emergency Response Plans
    - Live Integrated Network Surveillance System
- Integrate with the Department of Environmental Health Hazardous Materials Program
- Complete an additional 3000 high priority target hazard plans
- Complete 100 high priority wildland urban interface fire emergency response plans
- Identify impacts of implementing Next Generation 911 systems
- Integrate with records management system
- Enhance the system security policies and procedures.
- Integrate law enforcement and emergency management needs into the system

At the current level of staffing, it will likely take several years to meet the stated objectives. The current organization of the program loosely follows a geographic approach using the fire zones. The current effort does not commit staff to the law enforcement and emergency management coordination role. Given the interest in broadening the impact of GIS, diversifying the project support in law enforcement and emergency management will be important.

It is anticipated that the project will need the current staffing level for the next 12-24 months to meet the project objectives. During this time period, the project should seek opportunities to diversify the participation to include law enforcement and emergency management. This organization structure would allow for an ongoing aggressive effort to meet the project objectives. Future grant funding request should consider the following organizational chart in developing investment justifications.

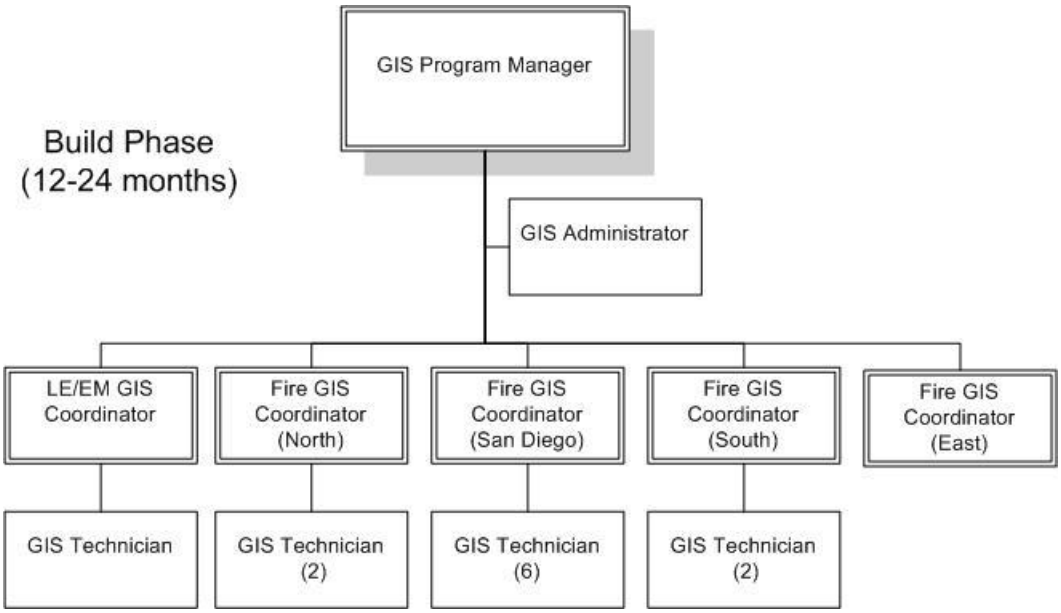

Most of these positions are currently funded and filled through the UASI grant. Many of those positions are provided through contractor support. The two main contractors have contracts that are available through 2016.

For those positions not currently filled, an investment justification for the FY14 UASI grant should be developed that reflects the proposed regional structure in the above charts.

Role of Unified Disaster Council

The core question in the future will be what role the UDC should fill in the staffing the RPSG. . At a minimum, it would seem to make sense that the regional responsibilities should be coordinated through the UDC.

Given the regional nature of the RPSG project, it would seem to be logical that the UDC work with the County Office of Emergency Services to determine the best method for providing ongoing program support. The cost associated with that role includes personnel cost, capital equipment costs and administrative costs. Providing this service through a regional approach would offer a cost effective method for the region.

An example of a regional approach to a program structure is shown below. This structure allows for an overall GIS Program Management, GIS System Administration and support for the three primary disciplines, law, fire and emergency managers.

Example One

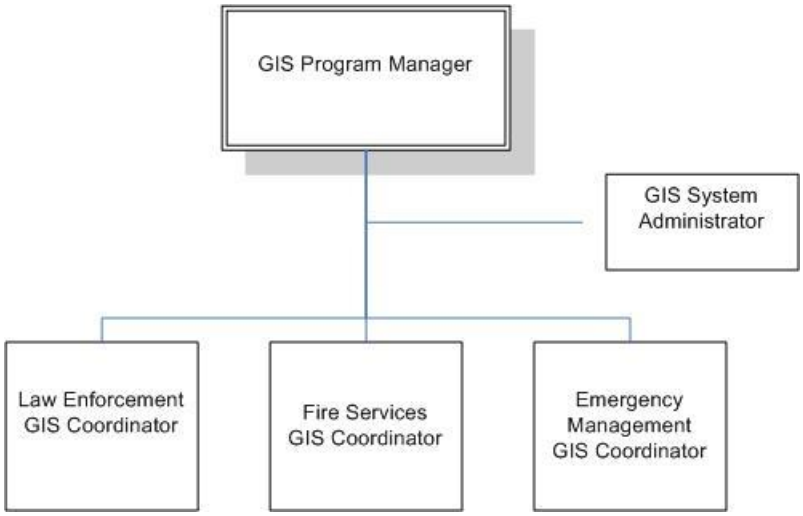

In this model, the primary responsibilities for each position would include.

GIS Program Manager

- Provide strategic leadership.
- Support financial and grant management requirements.
- Report to the UDC Public Safety Geodatabase Committee.
- Develop agendas and keep minutes for the UDC Public Safety Geodatabase Committee.
- Coordinate efforts between fire, law and emergency managers.
- Collaborate with regional stakeholders and other agencies on regional GIS projects.
- Lead and manage multi-discipline working group meetings.
- Provide program updates to the RTP and others as needed.

GIS Administrator

- Manage the public safety geodatabase software.
- Manage the hardware that supports the system.
- Manage the user's access to the data.

- Enforce data integrity requirements.
- Provide agencies with technical support.
- Develop and manage web mapping services and applications.

Fire Services GIS Coordinator

- Coordinate and support the GIS efforts between the fire communications centers.
- Coordinate and support the GIS efforts for the regions fire service agencies.
- Perform quality control checks on the data.
- Lead and manage fire based working groups
- Manage regional collection of public safety geodatabase data.

Law Enforcement GIS Coordinator

- Coordinate and support the GIS efforts between the law enforcement communications centers
- Coordinate and support the GIS efforts for the regions law enforcement agencies
- Perform quality control checks on the data
- Lead and manage law enforcement based working groups
- Manage regional collection of public safety geodatabase data.

Emergency Management GIS Coordinator

- Coordinate and support the GIS efforts between for the emergency managers group
- Coordinate and support the GIS efforts for the regions emergency managers
- Perform quality control checks on the data
- Lead and manage emergency managers based working groups
- Manage regional collection of public safety geodatabase data.

At this level of staffing, the region would receive support to continue the development, collection and maintenance of data. The key areas that would receive support include:

1. Target Hazard Plans – maintain current plans and continue to develop new plans.
2. Regional Map Book – maintain the map book for the region to make sure stakeholders have access to the most current data.
3. Map Viewers – continue to develop and maintain map viewers in support of the various stakeholders.
4. Hazardous Materials Business Plans – maintain the GIS database based on Department of Environmental Health updates that allow first responders the most current information through a map viewer.
5. Computer Aided Dispatch Mapping – maintain updates for all CAD users on data such as addressing, street centerlines and jurisdictional boundaries.
6. Next Generation 911 – support the requirements for address verification and emergency call routing through GIS layers.
7. Regional Resource Inventory Data – maintain the database that provides an inventory and map viewer of NIMS typed regional resources.

8. Web Mapping Services – continue to maintain a set of mapping services that can share data with other incident management and decision support systems.
9. Wildland Urban Interface Fire Emergency Response Plans – maintain current plans in the database and continue to add new plans to the database. .
10. Aerial Imagery – continue to support the provision of aerial imagery for the region.
11. System security – maintain the policies and procedures for providing system and data security.
12. Public Safety Geodatabase – maintain the regional database server and cloud services.

Additional information is provided in the strategic goals and objectives. (Attachment "A")

As an alternative approach, the UDC would only manage the very basic level of regional support. This level of support would only provide a staffing level for basic regional coordination and the basic system administration to keep the system functioning. It would provide minimal data development opportunities. It would depend on agencies in the region to provide the necessary staffing for data development.

Example Two

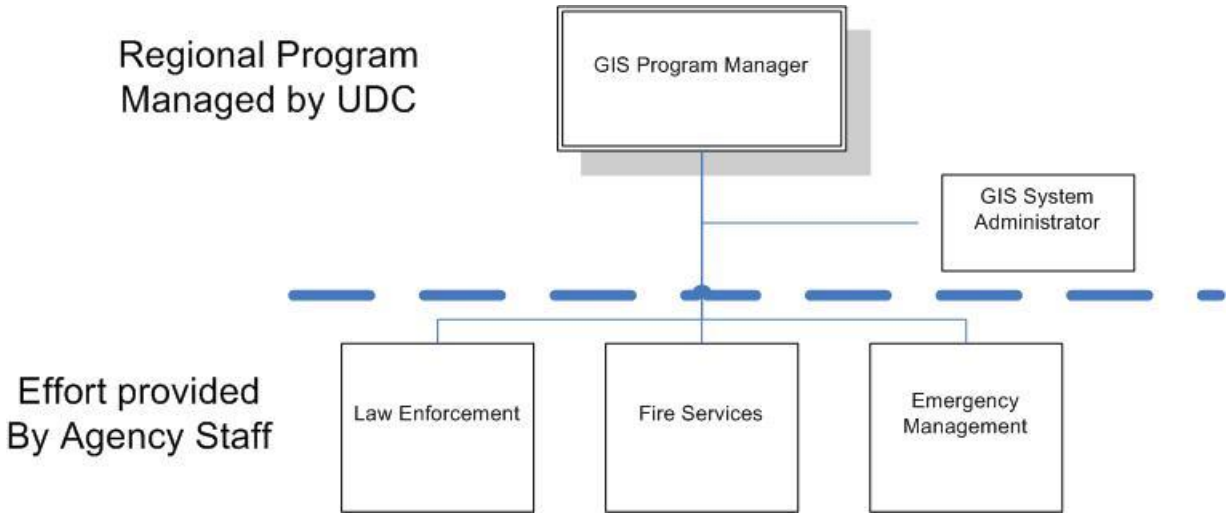

The key responsibilities for the GIS Program Manager and System Administrator would remain the same. This model would rely on the agencies utilizing existing agency staff to provide effort to coordinate, collaborate and maintain the GIS data.

Program Cost

The program cost under the UDC would be a combination of personnel cost, administrative support, software, capital replacement, connectivity and cloud services.

Personnel Cost

The estimated personnel cost for the staffing level in the "**Example One**" organizational chart would be:

Position	Projected Cost (Annual)	Regional/ Sub-Regional	Required Resources	Total Projected Cost (Annual)
GIS Program Manager	$200,000	Regional	1	$200,000
GIS Administrator	$150,000	Regional	1	$150,000
GIS Coordinator	$150,000	Regional	3	$450,000
		Total:	**5**	**$800,000**

In "**Example Two**", the very basic level of staffing has an estimated cost of:

Position	Projected Cost (Annual)	Regional/ Sub-Regional	Required Resources	Total Projected Cost (Annual)
GIS Program Manager	$200,000	Regional	1	$200,000
GIS Administrator	$150,000	Regional	1	$150,000
		Total:	**2**	**$350,000**

Administrative Support

Currently, management and administrative support is provided through a combination of the project manager, the City of San Diego OHS, City of Vista through their contract with Lynx Technologies and individual agencies that utilize employees. The funding for this support is currently allocated through 2014. If additional grant funding is not allocated for the support function in 2015, the UDC may need to ask the County of San Diego to provide cost information for County staff to support that role. The exact cost for this type of support has not yet been determined.

Capital Equipment Replacement

It is assumed that any hardware and equipment that is currently owned by individual agencies will continue to be maintained and replaced by those individual agencies. There are however some centralized servers and software in the system that serve a regional purpose. It would seem to make sense that those portions of the system would be replaced with funding from the entire region.

It is anticipated that this should result in the replacement of a medium Windows Server every 4 to 6 years. The estimated cost for server replacement is $25,000.

Cloud Services, Software licenses and Connectivity Expenses

The RPSG will require ongoing cloud services, software licensing and connectivity expenses. Some of these services support the entire region and should have a regional approach to maintain. The estimated annual expense for this category is $50,000.

Estimated Annual Budget

The estimated annual combined expense budget, utilizing the staffing level in **Example One** is:

Annual Expense	
Personnel Cost	800,000
Administrative Support	TBD
Software Support	10,000
Capital Equipment Replacement Plan	5,000
Connectivity	30,000
Cloud Services	10,000
Totals	$855,000

The estimated annual combined expense, utilizing the staffing level in **Example Two** is:

Annual Expense	
Personnel Cost	350,000
Administrative Support	TBD
Software Support	10,000
Capital Equipment Replacement Plan	5,000
Connectivity	30,000
Cloud Services	10,000
Totals	$405,000

Program Funding Sources

Grant Funding

The RPSG has primarily been funded by the UASI grant program. Currently the system enhancements and project management has funding allocated through the end of 2014. While the future of the UASI grant program is not completely clear, it is assumed that the program will continue in some form and funding will likely be available in the near term. With that assumption, the Urban Area Working Group will consider ongoing funding allocations in 2014. Any allocation in 2014 would support the program during 2015. Given the level of financial commitment for developing this capability, the ongoing use of grant funding should receive significant consideration.

If other grant funding options come available, the region should consider those opportunities.

Member Assessments

The UDC has the ability to fund programs through the collection member assessments. The formula is based upon the County of San Diego contributing 50% and the remaining signatory cities contributing the remaining 50% based upon population and assessed valuation.

While the primary source of funding is currently the UASI grant program, that source at some point may no longer be available. In that event, the UDC membership may need to consider utilizing their member assessment to fund ongoing support.

User Fees

There are some participants in the RPSG that are not members of the UDC. That results in those non-members receiving benefit without contributing to the cost to maintain the system. Given the current availability of grant funding, this has not been an issue. The mutual benefit of including those non-members has far outweighed any need for funding. However, if the grant fund diminishes, the UDC may want to consider non-member user fees to support the

Service Delivery Options

Currently, the UASI region utilizes a combination of contractor support and agency employed staff to work on the RPSG project. This includes a combination of program management and GIS professional and technical services.

Contract Project Management

The City of San Diego currently administers a contract with LR Kimball to provide project management and GIS technical support for the RPSG. This contract went through a competitive bid process and was executed in November 2011 with a term of one year and option to extend the contract in one year increments. There are a maximum of four one year term extensions available. The last extension for the current contract will expire in November 2016.

The current project management support and GIS professional services are funded through the end of 2014 and the City of San Diego has exercised a one year extension that is in effect through November 2014.

Contract GIS Professional and Technical Services

In 2011, the City of Vista awarded a contract for GIS services to Lynx Technologies through a competitive bid process. As part of that contract, other agencies are able to piggyback onto the pricing available through the contract. Several agencies in the region have taken advantage of this opportunity, thus avoiding a duplicate procurement process and saving time and effort.

This contract is available to the region through 2016. This vehicle for acquiring services will continue to be attractive option during this time period if the region desires to avoid a new competitive bid process.

The City of San Diego utilizes their contractor support through CGI to provide GIS services.

Agency Employees

Currently, the City of Chula Vista utilizes a limited term employee funding by the UASI grant to provide services.

The solution for providing services in the long term will likely depend on what types and levels of funding are available. As long as grant funds are utilized, a contractor service delivery model will likely dominate. If the funding diminishes or becomes funded through member assessments, the UDC will need to consider what the best service delivery model is for them. It could include any combination of contractor support or agency employees.

Timing for Assuming Governance

As described earlier in the document, the RPSG project currently utilizes an informal governance approach through the use of a GIS Steering Committee. The RTP does provide executive level oversight and makes recommendations to the region on funding allocations. The bulk of the project objectives should be attained within 12-24 months. Some agencies have become engaged later than others and they will likely continue to have additional work beyond that time period. One option is to continue to move the project forward in the current informal structure for the next 12-24 months. However, the current informal structure has resulted in a certain level of fragmented effort. While the agencies involved in the project have had a high level of collaboration, a more organized approach through a more formal governance structure and refined program organizational structure would provide a more stable foundation moving forward.

For the purposes of the UDC assuming a formal governance role, the recommended date for that step is July 1, 2014.

This timing would allow for the development of an investment justification for the FY14 UASI grant that takes a transition into consideration. The investment justification could reflect the refined organization chart and take into consideration the impacts on the County of San Diego in supporting the program through the Office of Emergency Services. The funding allocation decision process should take place in spring of 2014. If the grant allocation decisions are made in time, the UDC could adopt a budget that takes the transition into consideration. If the funding allocation decision is not complete, a mid-year budget adjustment may be necessary for the UDC.

5. Recommendations

1. **Designate the Unified San Diego County Emergency Services Agreement and the Unified Disaster Council as an appropriate solution for the RPSG governance.**

   The membership of the UDC is reflective of the current stakeholders in the project and provides an existing agreement that supports regional efforts of this type.

2. **Create a multidisciplinary advisory committee with subject matter stakeholders to advise the Unified Disaster Council regarding policy and funding recommendations.**

   The San Diego region currently utilizes a GIS Steering Committee to determine operational and technical solutions for the project. The representation on this committee has consisted of fire representatives based on the fire zones. This committee currently reports its progress to the RTP.

   Going forward, a multidisciplinary advisory committee should be created to advise the UDC on policy and funding issues. The membership should include representatives from law enforcement, fire and emergency medical services and emergency managers.

3. **The City of San Diego Office of Homeland Security should continue to manage the UASI grant funding and existing contractual agreements to support the program.**

   The City of San Diego plays a critical role in the current grant management and contractual responsibilities. Assuming that the region will continue to utilize UASI grant funding, the City of San Diego should maintain those responsibilities of grant management and contract administration.

4. **In the short term, continue to utilize a combination of existing contractor services to manage and develop the project.**

   The region utilizes a combination of contractor services and agency employees to support the RPSG project. In the short term, this may be the best solution. In the long term, the UDC will need to explore the various approaches to supporting the program.

   This recommendation assumes satisfactory performance of the existing contractors.

5. **In the long term, the UDC should assume the lead in determining how to provide program management and staffing at the regional level.**

   In order to maintain the RPSG, a minimum level of staffing is required for regional coordination and program sustainment. This includes an evaluation of what level of staff

is necessary and the options for providing the support. Options include ongoing contractor support or agency hired staff.

6. **If possible, continue to utilize grant funding to support the program management, administrative support and operating cost.**

   Utilizing grant funding for the program management, administrative support and operating cost will reduce the impact on member assessments.

7. **If grant funding is not available, may need to identify member assessments and user fees as potential funding mechanisms.**

   If grant funding is not available, the UDC members may need to consider utilizing member assessments to sustain the program.

8. **The UDC should assume the formal role of governance on July 1, 2014.**

   The role of responsibility for overall governance of the San Diego RPSG should be transitioned to the UDC on July 1, 2014. The UDC would have final authority on policy and funding issues and would receive recommendations from the UDC Advisory Committee and the RTP.

   Formalizing the role of governance would provide a legal entity for forming policy, allows intergovernmental agreements, formalize the regional organizational structure and provide opportunities regionalize multidisciplinary efforts.

6. Benefits to the San Diego Region

The UASI Region has committed significant financial resources towards the development and implementation of the RPSG. In order to maintain this capability, a long term solution for governance needs to be identified. The benefits of the UDC assuming the role of formal governance includes;

- ✓ Provide a legal entity for forming policy.
- ✓ Allow intergovernmental agreements.
- ✓ Formalize the regional structure, roles and responsibilities.
- ✓ Provide opportunities for regionalized multidisciplinary efforts.
- ✓ Provide a mechanism for procurement of services.
- ✓ Provides a mechanism to sustain the capability.

Accepting the role of formal governance does not commit the UDC membership to any general fund member assessment costs. Any cost associated with utilizing member assessments as a funding source would be subject to budget adoption by the full membership at a later date.