# COUNTY OF SAN DIEGO TRACT 5338 RPL-7

## VESTING TENTATIVE MAP

# CAMPUS PARK

| ○ BOUNDARY DATA | | | |
|---|---|---|---|
| NO | BEARING/DELTA | RADIUS | LENGTH |
| L1 | N87°28'03"W | --- | 676.21' |
| L2 | N47°48'06"E | --- | 221.24' |
| L3 | N14°06'13"E | --- | 123.36' |
| L4 | N06°12'33"W | --- | 239.79' |
| L5 | S85°25'36"W | --- | 80.85' |
| C6 | Δ=13°06'45" | 1400.92' | 320.61' |
| L7 | N67°37'05"E | --- | 115.89' |
| C8 | Δ=89°32'43" | 20.00' | 31.26' |
| L9 | S22°50'11"E | --- | 681.32' |
| L10 | S22°50'11"E | --- | 481.62' |
| L11 | N65°44'28"E | --- | 355.33' |
| L12 | N21°12'22"E | --- | 184.99' |
| L13 | N04°47'50"E | --- | 360.50' |
| L14 | N34°30'10"E | --- | 70.57' |
| L15 | N34°27'23"E | --- | 19.85' |
| L17 | N02°56'10"W | --- | 353.22' |
| L18 | N36°05'50"W | --- | 648.12' |
| L19 | N35°24'49"W | --- | 426.83' |
| L20 | N63°56'17"W | --- | 301.46' |
| L21 | N47°07'11"W | --- | 110.55' |
| L22 | N79°12'06"W | --- | 71.27' |
| L23 | N69°23'41"E | --- | 166.09' |
| L24 | N15°49'05"W | --- | 340.41' |
| L27 | N04°53'19"W | --- | 495.34' |
| L28 | N06°32'11"E | --- | 362.12' |
| L29 | N02°53'04"W | --- | 300.74' |
| L30 | N32°20'59"W | --- | 277.18' |
| L31 | N03°25'14"W | --- | 350.64 |
| L32 | N09°58'22"W | --- | 350.64' |
| L33 | N02°22'22"W | --- | 215.09' |
| L34 | N89°20'33"W | --- | 421.58' |
| L35 | N01°06'52"E | --- | 329.46' |
| C36 | Δ=77°01'48" | 390.00' | 524.33' |
| L37 | N10°12'08"W | --- | 155.27' |
| L38 | N24°57'44"W | --- | 194.23' |
| L39 | N31°16'04"W | --- | 137.82' |
| L40 | N23°11'28"W | --- | 46.06' |
| L41 | N31°16'04"W | --- | 20.00' |
| L42 | N26°26'46"W | --- | 76.00' |
| L43 | N37°18'48"W | --- | 105.99' |
| L44 | N45°28'39"W | --- | 124.65' |
| L45 | N44°15'41"W | --- | 567.95' |
| C46 | Δ=35°04'15" | 880.00' | 538.65' |
| L47 | N63°16'37"E | --- | 217.78' |
| C48 | Δ=24°27'24" | 2058.00' | 878.46' |
| C49 | Δ=32°00'00" | 1207.00' | 674.12' |
| L50 | N34°14'20"W | --- | 583.27' |
| C51 | Δ=03°40'24" | 1323.00' | 84.82' |
| L52 | N02°00'53"E | --- | 48.03' |

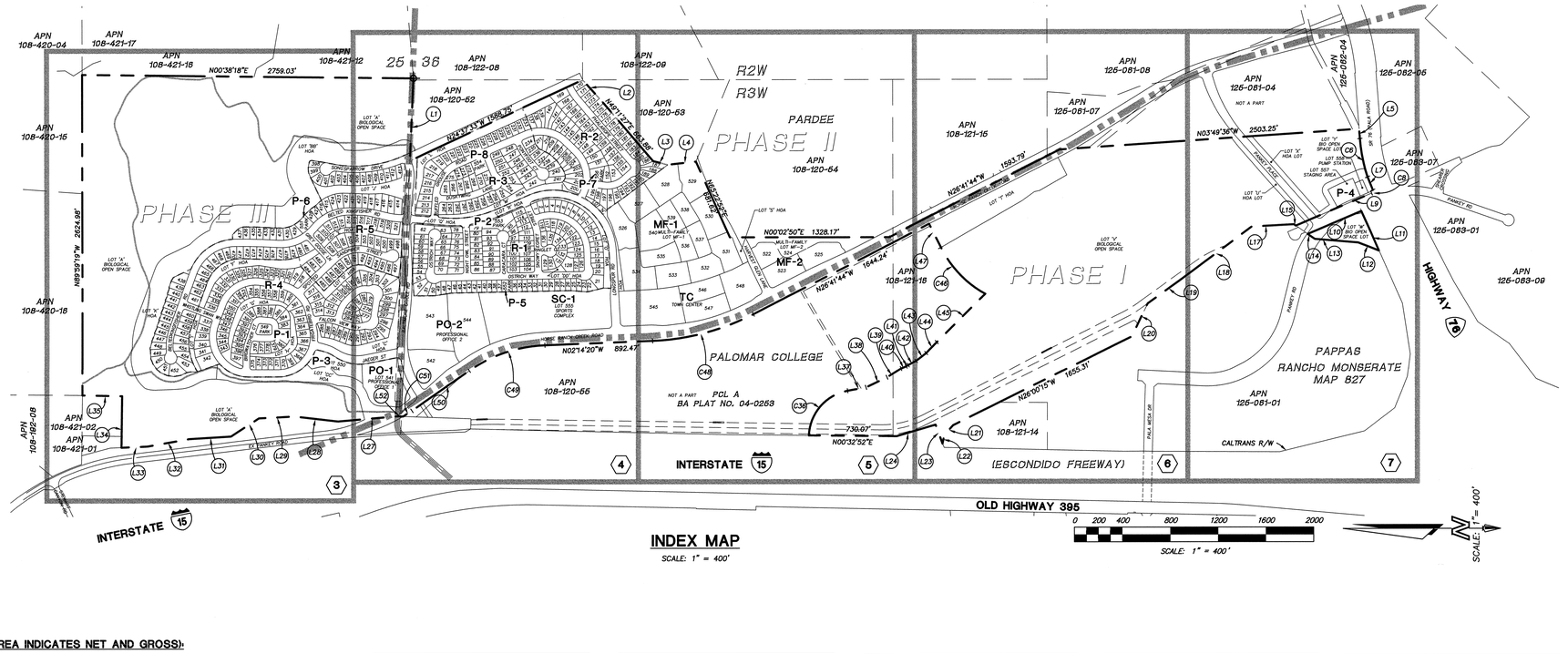


## INDEX MAP

SCALE: 1" = 400'

### LOT SUMMARY TABLE (AREA INDICATES NET AND GROSS):

NEIGHBORHOOD R-1 4,000 SF MIN

| LOT | AREA, SF | AREA, AC |
|---|---|---|
| 1 | 4,563 | 0.10 |
| 2 | 4,651 | 0.11 |
| 3 | 4,838 | 0.11 |
| 4 | 4,856 | 0.11 |
| 5 | 4,941 | 0.11 |
| 6 | 4,876 | 0.11 |
| 7 | 4,899 | 0.11 |
| 8 | 4,902 | 0.11 |
| 9 | 4,948 | 0.11 |
| 10 | 4,972 | 0.11 |
| 11 | 4,967 | 0.11 |
| 12 | 5,001 | 0.11 |
| 13 | 4,978 | 0.11 |
| 14 | 4,997 | 0.11 |
| 15 | 4,967 | 0.11 |
| 16 | 4,814 | 0.11 |
| 17 | 4,580 | 0.11 |
| 18 | 4,640 | 0.11 |
| 19 | 4,050 | 0.09 |
| 20 | 5,024 | 0.12 |
| 21 | 9,837 | 0.23 |
| 22 | 5,853 | 0.13 |
| 23 | 4,041 | 0.09 |
| 24 | 4,369 | 0.10 |
| 25 | 4,565 | 0.10 |
| 26 | 4,495 | 0.10 |
| 27 | 4,495 | 0.10 |
| 28 | 4,495 | 0.10 |
| 29 | 4,613 | 0.11 |
| 30 | 5,168 | 0.12 |
| 31 | 4,247 | 0.10 |
| 32 | 4,198 | 0.10 |
| 33 | 4,198 | 0.10 |
| 34 | 4,198 | 0.10 |
| 35 | 4,198 | 0.10 |
| 36 | 4,178 | 0.10 |
| 37 | 4,198 | 0.10 |
| 38 | 4,198 | 0.10 |
| 39 | 4,198 | 0.10 |
| 40 | 4,178 | 0.10 |
| 41 | 4,198 | 0.10 |
| 42 | 4,198 | 0.10 |
| 43 | 4,198 | 0.10 |
| 44 | 4,198 | 0.10 |
| 45 | 4,197 | 0.10 |
| 46 | 4,244 | 0.10 |
| 47 | 4,547 | 0.10 |
| 48 | 4,547 | 0.11 |
| 49 | 4,400 | 0.10 |
| 50 | 5,235 | 0.12 |
| 51 | 7,289 | 0.17 |
| 52 | 9,339 | 0.21 |
| 53 | 6,672 | 0.15 |
| 54 | 4,931 | 0.11 |
| 55 | 5,020 | 0.12 |
| 56 | 5,009 | 0.11 |
| 57 | 4,986 | 0.11 |
| 58 | 4,963 | 0.11 |
| 59 | 4,940 | 0.11 |
| 60 | 4,917 | 0.11 |
| 61 | 4,894 | 0.11 |
| 62 | 11,361 | 0.26 |
| 63 | 6,623 | 0.15 |
| 64 | 4,024 | 0.09 |
| 65 | 5,295 | 0.12 |
| 66 | 5,667 | 0.13 |
| 67 | 5,493 | 0.13 |
| 68 | 6,359 | 0.12 |
| TOTAL RES LOTS | | 136 |
| TOTAL AREA | | 16.51 |

NEIGHBORHOOD R-2 4,500 SF MIN

| LOT | AREA, SF | AREA, AC |
|---|---|---|
| 137 | 5,693 | 0.13 |
| 138 | 6,116 | 0.14 |
| 139 | 6,697 | 0.15 |
| 140 | 10,418 | 0.24 |
| 141 | 8,457 | 0.19 |
| 142 | 8,249 | 0.19 |
| 143 | 7,466 | 0.17 |
| 144 | 6,936 | 0.16 |
| 145 | 6,782 | 0.16 |
| 146 | 6,705 | 0.15 |
| 147 | 6,649 | 0.15 |
| 148 | 7,301 | 0.17 |
| 149 | 8,076 | 0.19 |
| 150 | 8,517 | 0.20 |
| 151 | 8,692 | 0.20 |
| 152 | 7,073 | 0.16 |
| 153 | 9,740 | 0.22 |
| 154 | 6,749 | 0.15 |
| 155 | 5,163 | 0.12 |
| 156 | 6,443 | 0.15 |
| 157 | 6,221 | 0.14 |
| 158 | 5,726 | 0.13 |
| 159 | 5,097 | 0.12 |
| 160 | 5,406 | 0.12 |
| 161 | 5,569 | 0.13 |
| 162 | 5,732 | 0.13 |
| 163 | 5,894 | 0.14 |
| 164 | 6,033 | 0.14 |
| 165 | 6,246 | 0.14 |
| 166 | 6,535 | 0.15 |
| 167 | 6,930 | 0.16 |
| 168 | 7,533 | 0.17 |
| 169 | 11,050 | 0.25 |
| 170 | 5,527 | 0.13 |
| 171 | 6,203 | 0.14 |
| 172 | 5,958 | 0.14 |
| 173 | 5,780 | 0.13 |
| 174 | 5,822 | 0.13 |
| TOTAL RES LOTS | | 75 |
| TOTAL AREA | | 11.11 |

NEIGHBORHOOD R-3 5,000 SF MIN

| LOT | AREA, SF | AREA, AC |
|---|---|---|
| 212 | 7,568 | 0.17 |
| 213 | 6,705 | 0.15 |
| 214 | 6,965 | 0.16 |
| 215 | 6,742 | 0.15 |
| 216 | 6,487 | 0.15 |
| 217 | 8,056 | 0.18 |
| 218 | 9,718 | 0.22 |
| 219 | 7,642 | 0.18 |
| 220 | 6,065 | 0.14 |
| 221 | 6,024 | 0.14 |
| 222 | 5,344 | 0.12 |
| 223 | 5,554 | 0.13 |
| 224 | 5,531 | 0.13 |
| 225 | 5,448 | 0.13 |
| 226 | 5,363 | 0.12 |
| 227 | 5,363 | 0.12 |
| 228 | 5,405 | 0.12 |
| 229 | 5,357 | 0.12 |
| 230 | 5,428 | 0.12 |
| 231 | 5,355 | 0.12 |
| 232 | 5,455 | 0.13 |
| 233 | 5,590 | 0.13 |
| 234 | 7,561 | 0.17 |
| 235 | 5,194 | 0.12 |
| 236 | 5,583 | 0.13 |
| 237 | 6,115 | 0.14 |
| 238 | 7,717 | 0.18 |
| 239 | 6,024 | 0.14 |
| 240 | 7,732 | 0.18 |
| 241 | 7,782 | 0.18 |
| 242 | 11,138 | 0.26 |
| 243 | 7,465 | 0.17 |
| 244 | 7,376 | 0.17 |
| 245 | 7,129 | 0.16 |
| 246 | 7,148 | 0.16 |
| 247 | 8,047 | 0.18 |
| 248 | 7,475 | 0.17 |
| 249 | 4,963 | 0.11 |
| 250 | 5,811 | 0.13 |
| 251 | 6,214 | 0.14 |
| 252 | 6,389 | 0.15 |
| 253 | 9,710 | 0.22 |
| 254 | 11,134 | 0.26 |
| 255 | 7,761 | 0.18 |
| 256 | 5,578 | 0.13 |
| 257 | 5,782 | 0.13 |
| 258 | 5,744 | 0.13 |
| 259 | 5,682 | 0.13 |
| 260 | 5,677 | 0.13 |
| 261 | 5,683 | 0.13 |
| 262 | 5,583 | 0.13 |
| 263 | 5,516 | 0.13 |
| 264 | 6,527 | 0.15 |
| 265 | 8,340 | 0.19 |
| 266 | 7,273 | 0.17 |
| 267 | 7,375 | 0.17 |
| 268 | 7,812 | 0.18 |
| 269 | 8,121 | 0.19 |
| 270 | 6,615 | 0.15 |
| 271 | 7,265 | 0.17 |
| 272 | 5,067 | 0.12 |
| 273 | 4,560 | 0.10 |
| 274 | 4,629 | 0.11 |
| 275 | 5,725 | 0.13 |
| TOTAL RES LOTS | | 64 |
| TOTAL AREA | | 9.72 |

NEIGHBORHOOD R-4 4,500 SF MIN

| LOT | AREA, SF | AREA, AC |
|---|---|---|
| 276 | 5,399 | 0.12 |
| 277 | 6,437 | 0.15 |
| 278 | 5,379 | 0.12 |
| 279 | 5,072 | 0.12 |
| 280 | 4,763 | 0.11 |
| 281 | 5,425 | 0.12 |
| 282 | 5,452 | 0.13 |
| 283 | 4,673 | 0.11 |
| 284 | 4,650 | 0.11 |
| 285 | 5,859 | 0.13 |
| 286 | 5,768 | 0.13 |
| 287 | 5,750 | 0.13 |
| 288 | 5,656 | 0.13 |
| 289 | 6,099 | 0.14 |
| 290 | 6,985 | 0.16 |
| 291 | 6,757 | 0.16 |
| 292 | 5,895 | 0.14 |
| 293 | 6,490 | 0.15 |
| 294 | 6,389 | 0.15 |
| 295 | 8,069 | 0.19 |
| 296 | 7,454 | 0.17 |
| 297 | 5,901 | 0.14 |
| 298 | 6,068 | 0.14 |
| 299 | 6,780 | 0.16 |
| 300 | 8,457 | 0.19 |
| 301 | 11,759 | 0.27 |
| 302 | 10,405 | 0.24 |
| 303 | 8,350 | 0.19 |
| 304 | 5,318 | 0.12 |
| 305 | 6,939 | 0.16 |
| 306 | 6,728 | 0.15 |
| 307 | 5,737 | 0.13 |
| 308 | 4,685 | 0.11 |
| 309 | 4,893 | 0.11 |
| 310 | 5,407 | 0.12 |
| 311 | 6,068 | 0.14 |
| 312 | 6,540 | 0.15 |
| 313 | 5,921 | 0.14 |
| 314 | 6,483 | 0.15 |
| 315 | 6,548 | 0.15 |
| 316 | 6,583 | 0.15 |
| 317 | 6,721 | 0.15 |
| 318 | 8,838 | 0.20 |
| 319 | 9,403 | 0.22 |
| 320 | 6,163 | 0.14 |
| 321 | 5,027 | 0.12 |
| 322 | 4,500 | 0.10 |
| 323 | 4,500 | 0.10 |
| 324 | 4,500 | 0.10 |
| 325 | 4,906 | 0.11 |
| 326 | 4,797 | 0.11 |
| 327 | 4,674 | 0.11 |
| 328 | 4,945 | 0.11 |
| 329 | 5,436 | 0.12 |
| 330 | 5,755 | 0.13 |
| 331 | 6,185 | 0.14 |
| 332 | 6,374 | 0.15 |
| 333 | 6,162 | 0.14 |
| 334 | 5,206 | 0.12 |
| 335 | 5,004 | 0.11 |
| 336 | 5,721 | 0.13 |
| 337 | 7,283 | 0.17 |
| 338 | 6,701 | 0.15 |
| 339 | 7,149 | 0.16 |
| 340 | 8,040 | 0.18 |
| 341 | 8,809 | 0.20 |
| 342 | 17,091 | 0.39 |
| 343 | 4,523 | 0.10 |
| 344 | 4,973 | 0.11 |
| 345 | 5,224 | 0.12 |
| 346 | 5,112 | 0.12 |
| 347 | 4,500 | 0.10 |
| 348 | 4,500 | 0.10 |
| 349 | 4,500 | 0.10 |
| 350 | 5,763 | 0.13 |
| 351 | 5,223 | 0.12 |
| 352 | 5,223 | 0.12 |
| 353 | 5,233 | 0.12 |
| 354 | 5,507 | 0.13 |
| 355 | 5,113 | 0.12 |
| 356 | 5,453 | 0.13 |
| 357 | 5,393 | 0.12 |
| 358 | 5,389 | 0.12 |
| 359 | 6,012 | 0.14 |
| 360 | 6,729 | 0.15 |
| 361 | 7,891 | 0.18 |
| 362 | 7,768 | 0.18 |
| 363 | 6,078 | 0.14 |
| 364 | 6,147 | 0.14 |
| 365 | 6,891 | 0.16 |
| 366 | 6,529 | 0.15 |
| 367 | 6,457 | 0.15 |
| 368 | 7,133 | 0.16 |
| 369 | 6,510 | 0.15 |
| 370 | 5,615 | 0.13 |
| 371 | 5,292 | 0.12 |
| 372 | 4,883 | 0.11 |
| 373 | 5,024 | 0.12 |
| 374 | 5,263 | 0.12 |
| 375 | 5,577 | 0.13 |
| 376 | 6,658 | 0.15 |
| 377 | 4,993 | 0.11 |
| 378 | 4,809 | 0.11 |
| 379 | 4,795 | 0.11 |
| 380 | 5,695 | 0.13 |
| 381 | 6,076 | 0.14 |
| 382 | 4,781 | 0.11 |
| 383 | 5,535 | 0.13 |
| 384 | 7,669 | 0.18 |
| 385 | 7,802 | 0.18 |
| 386 | 5,316 | 0.12 |
| 387 | 5,160 | 0.12 |
| 388 | 5,633 | 0.13 |
| 389 | 5,646 | 0.13 |
| 390 | 5,380 | 0.12 |
| 391 | 4,578 | 0.11 |
| 392 | 4,711 | 0.11 |
| 393 | 4,766 | 0.11 |
| 394 | 4,884 | 0.11 |
| 395 | 4,511 | 0.10 |
| 396 | 4,578 | 0.11 |
| 397 | 7,367 | 0.17 |
| TOTAL RES LOTS | | 122 |
| TOTAL AREA | | 16.94 |

NEIGHBORHOOD R-5 5,000 SF MIN

| LOT | AREA, SF | AREA, AC |
|---|---|---|
| 398 | 5,478 | 0.13 |
| 399 | 6,189 | 0.14 |
| 400 | 6,337 | 0.15 |
| 401 | 5,108 | 0.12 |
| 402 | 5,990 | 0.14 |
| 403 | 5,867 | 0.13 |
| 404 | 5,359 | 0.12 |
| 405 | 5,518 | 0.13 |
| 406 | 5,517 | 0.13 |
| 407 | 5,527 | 0.13 |
| 408 | 5,548 | 0.13 |
| 409 | 5,631 | 0.13 |
| 410 | 5,693 | 0.13 |
| 411 | 5,510 | 0.13 |
| 412 | 5,571 | 0.13 |
| 413 | 5,112 | 0.12 |
| 414 | 8,561 | 0.20 |
| 415 | 7,649 | 0.18 |
| 416 | 8,290 | 0.19 |
| 417 | 7,780 | 0.18 |
| 418 | 6,676 | 0.16 |
| 419 | 6,127 | 0.14 |
| 420 | 5,857 | 0.13 |
| 421 | 5,883 | 0.14 |
| 422 | 6,585 | 0.15 |
| 423 | 6,812 | 0.16 |
| 424 | 6,793 | 0.16 |
| 425 | 6,444 | 0.15 |
| 426 | 5,785 | 0.13 |
| 427 | 5,360 | 0.12 |
| 428 | 5,360 | 0.12 |
| 429 | 7,211 | 0.17 |
| 430 | 6,349 | 0.15 |
| 431 | 5,884 | 0.14 |
| 432 | 5,500 | 0.13 |
| 433 | 5,500 | 0.13 |
| 434 | 5,702 | 0.13 |
| 435 | 5,561 | 0.13 |
| 436 | 5,500 | 0.13 |
| 437 | 6,752 | 0.16 |
| 438 | 9,572 | 0.22 |
| 439 | 6,651 | 0.15 |
| 440 | 6,328 | 0.15 |
| 441 | 6,102 | 0.14 |
| 442 | 5,980 | 0.14 |
| 443 | 5,858 | 0.13 |
| 444 | 5,725 | 0.13 |
| 445 | 5,618 | 0.13 |
| 446 | 5,931 | 0.14 |
| 447 | 6,590 | 0.15 |
| 448 | 7,022 | 0.16 |
| 449 | 7,068 | 0.16 |
| 450 | 9,087 | 0.21 |
| 451 | 7,113 | 0.16 |
| 452 | 11,361 | 0.26 |
| 453 | 12,550 | 0.29 |
| 454 | 7,965 | 0.18 |
| 455 | 8,152 | 0.19 |
| 456 | 7,505 | 0.17 |
| 457 | 6,636 | 0.16 |
| 458 | 6,316 | 0.14 |
| 459 | 5,700 | 0.13 |
| 460 | 6,754 | 0.16 |
| 461 | 7,956 | 0.18 |
| 462 | 5,928 | 0.14 |
| 463 | 5,971 | 0.14 |
| 464 | 6,274 | 0.14 |
| 465 | 7,016 | 0.16 |
| 466 | 7,203 | 0.17 |
| 467 | 7,242 | 0.17 |
| 468 | 7,162 | 0.16 |
| 469 | 6,017 | 0.14 |
| 470 | 5,705 | 0.13 |
| 471 | 5,629 | 0.13 |
| 472 | 5,602 | 0.13 |
| 473 | 5,748 | 0.13 |
| 474 | 5,736 | 0.13 |
| 475 | 5,629 | 0.13 |
| 476 | 5,529 | 0.13 |
| 477 | 5,807 | 0.13 |
| 478 | 5,844 | 0.13 |
| 479 | 5,840 | 0.13 |
| 480 | 5,797 | 0.13 |
| 481 | 7,121 | 0.16 |
| 482 | 6,786 | 0.16 |
| 483 | 6,097 | 0.14 |
| 484 | 6,762 | 0.16 |
| 485 | 6,040 | 0.14 |
| 486 | 5,600 | 0.13 |
| 487 | 5,300 | 0.12 |
| 488 | 5,000 | 0.11 |
| 489 | 5,141 | 0.12 |
| 490 | 6,009 | 0.14 |
| 491 | 6,917 | 0.16 |
| 492 | 6,798 | 0.16 |
| 493 | 5,746 | 0.13 |
| 494 | 5,687 | 0.13 |
| 495 | 5,480 | 0.13 |
| 496 | 5,644 | 0.13 |
| 497 | 8,891 | 0.20 |
| 498 | 8,061 | 0.18 |
| 499 | 6,045 | 0.12 |
| 500 | 6,624 | 0.15 |
| 501 | 6,193 | 0.14 |
| 502 | 5,889 | 0.14 |
| 503 | 5,782 | 0.13 |
| 504 | 6,445 | 0.15 |
| 505 | 7,214 | 0.17 |
| 506 | 7,768 | 0.18 |
| 507 | 6,587 | 0.15 |
| 508 | 6,376 | 0.15 |
| 509 | 6,272 | 0.14 |
| 510 | 5,512 | 0.13 |
| 511 | 5,604 | 0.13 |
| 512 | 5,585 | 0.13 |
| 513 | 5,581 | 0.13 |
| 514 | 5,397 | 0.12 |
| 515 | 5,000 | 0.11 |
| 516 | 5,493 | 0.13 |
| 517 | 5,955 | 0.14 |
| 518 | 5,911 | 0.14 |
| 519 | 5,961 | 0.13 |
| 520 | 5,667 | 0.13 |
| 521 | 7,592 | 0.17 |
| TOTAL RES LOTS | | 124 |
| TOTAL AREA | | 18.09 |

NEIGHBORHOOD MF-1

| LOT | AREA, SF | AREA, AC |
|---|---|---|
| 526 | 99,124 | 1.36 |
| 527 | 60,707 | 1.39 |
| 528 | 67,203 | 1.54 |
| 529 | 56,607 | 1.30 |
| 530 | 62,457 | 1.43 |
| 531 | 53,077 | 1.22 |
| 532 | 50,955 | 1.17 |
| 533 | 52,992 | 1.22 |
| 534 | 79,022 | 1.81 |
| 535 | 47,169 | 1.08 |
| 536 | 35,480 | 0.81 |
| 537 | 35,408 | 0.81 |
| 538 | 33,866 | 0.78 |
| 539 | 35,913 | 0.82 |
| 540 | 72,465 | 1.66 |
| TOTAL RES LOTS | | 15 |
| TOTAL UNITS | | 189 |
| TOTAL AREA | | 16.42 |

NEIGHBORHOOD MF-2

| LOT | AREA, SF | AREA, AC |
|---|---|---|
| 522 | 37,099 | 0.85 |
| 523 | 57,340 | 1.32 |
| 524 | 81,532 | 1.87 |
| 525 | 53,229 | 1.22 |
| TOTAL RES LOTS | | 4 |
| TOTAL UNITS | | 41 |
| TOTAL AREA | | 5.26 |

LETTERED LOTS (OPEN SPACES)

| LOT | AREA, SF | AREA, AC |
|---|---|---|
| A | 4,094,438 | 93.77 |
| C | 93,402 | 2.14 |
| D | 31,238 | 0.72 |
| E | 36,160 | 0.83 |
| F | 77,580 | 1.78 |
| G | 48,291 | 1.11 |
| H | 30,235 | 0.69 |
| I | 20,966 | 0.48 |
| J | 74,482 | 1.71 |
| K | 405,395 | 9.31 |
| L | 118,549 | 2.72 |
| M | 54,468 | 1.25 |
| N | 23,464 | 0.54 |
| O | 40,590 | 0.93 |
| Q | 11,353 | 0.26 |
| R | 4,678 | 0.11 |
| S | 10,811 | 0.25 |
| T | 226,608 | 5.20 |
| U | 40,822 | 0.94 |
| V | 4,100,736 | 94.14 |
| W | 70,304 | 1.61 |
| X | 78,657 | 1.81 |
| Y | 330,502 | 7.59 |
| BB | 271,087 | 6.22 |
| CC | 153,606 | 3.53 |
| DD | 5,550 | 0.13 |
| TOTAL OS LOTS | | 26 |
| TOTAL AREA | | 238.83 |

PROFESSIONAL OFFICE 1 & 2

| LOT | AREA, SF | AREA, AC |

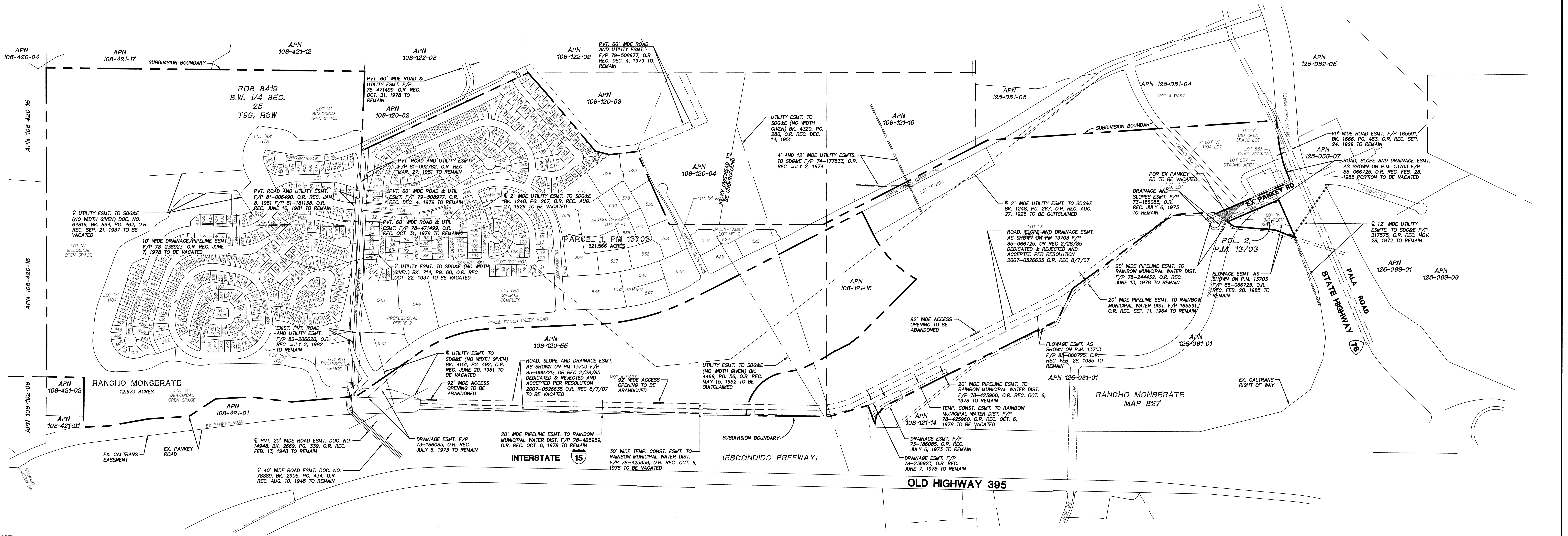


## LEGEND

| | |
|---|---|
| PROPOSED ROADWAY VACATION | (shaded) |
| SUBDIVISION BOUNDARY | (dashed line) |

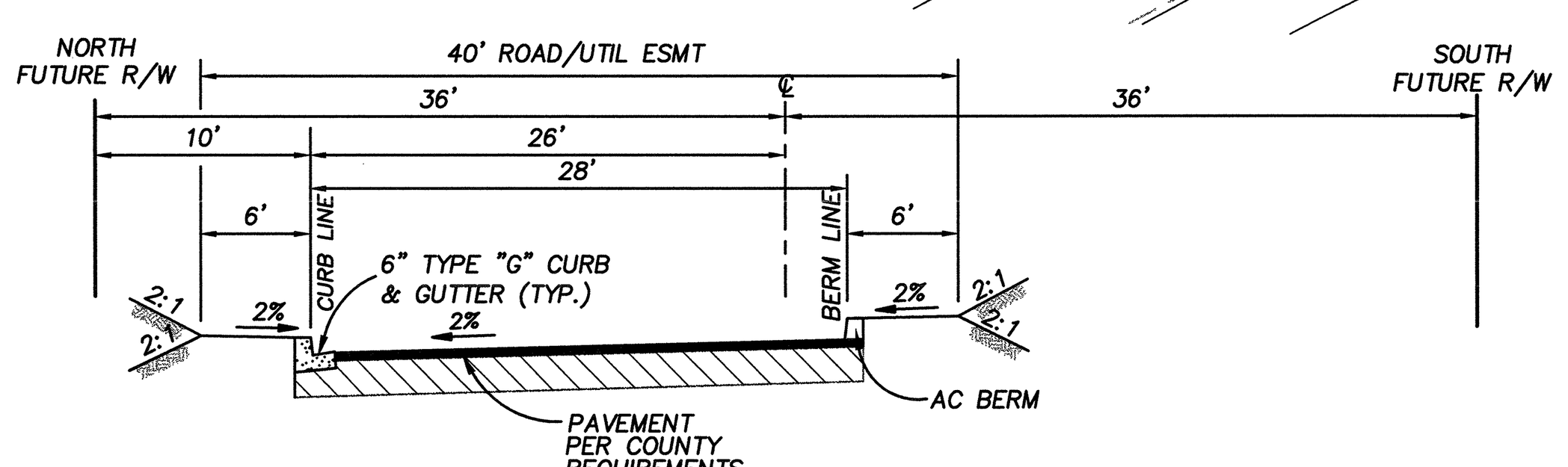


**TYPICAL SECTION**
**PALA MESA DRIVE**
NO SCALE

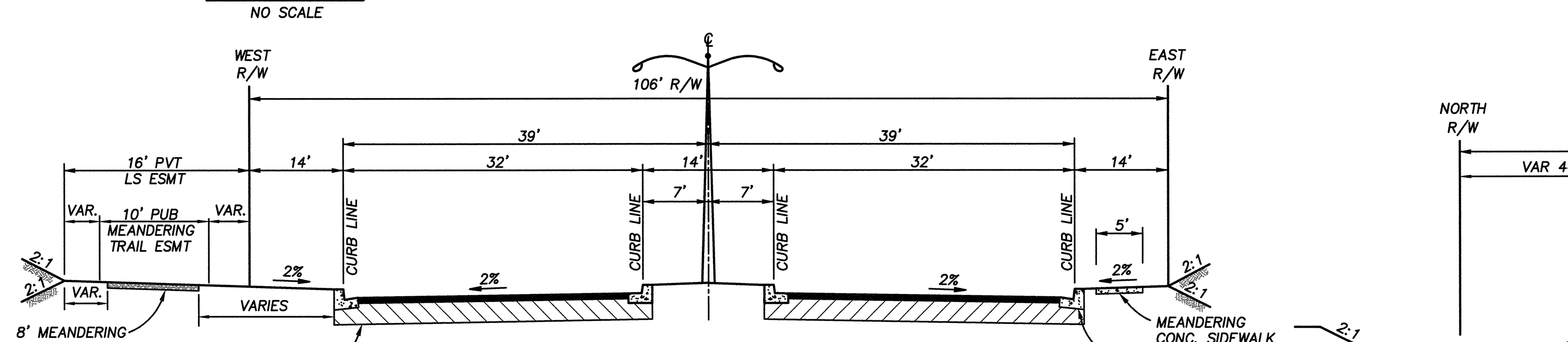


**TYPICAL SECTION**
**HORSE RANCH CREEK ROAD (ON-SITE) (PUBLIC)**
NO SCALE

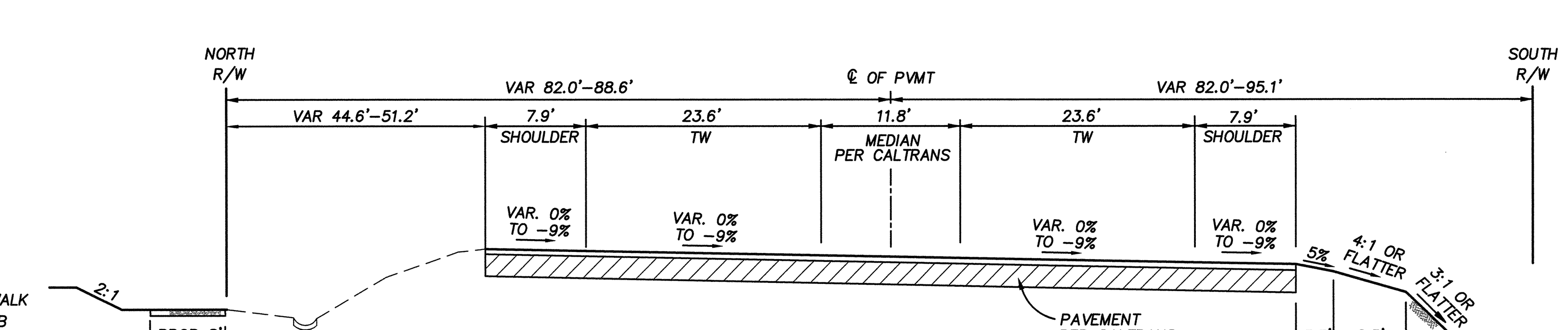


**SR-76 PALA ROAD (EXIST)**
NO SCALE

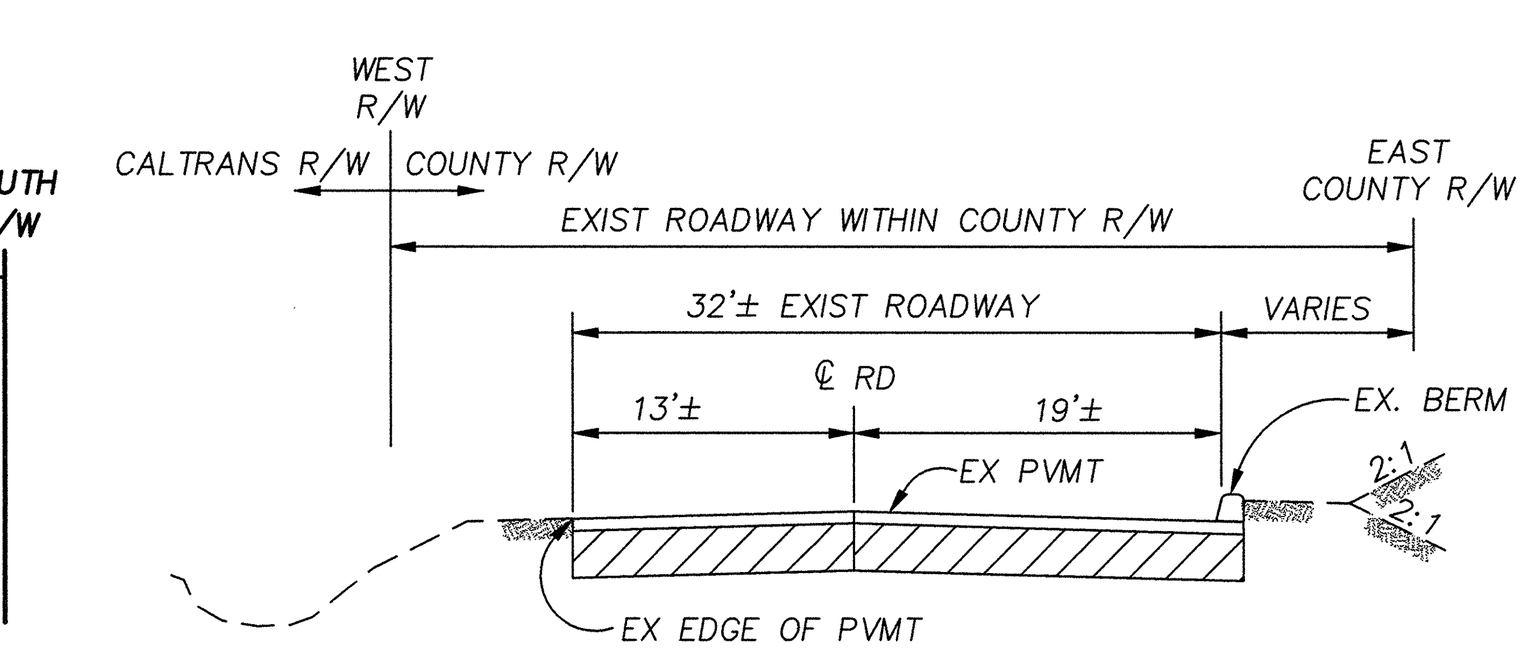


**EX PANKEY ROAD - NORTH (PUBLIC)**
NO SCALE

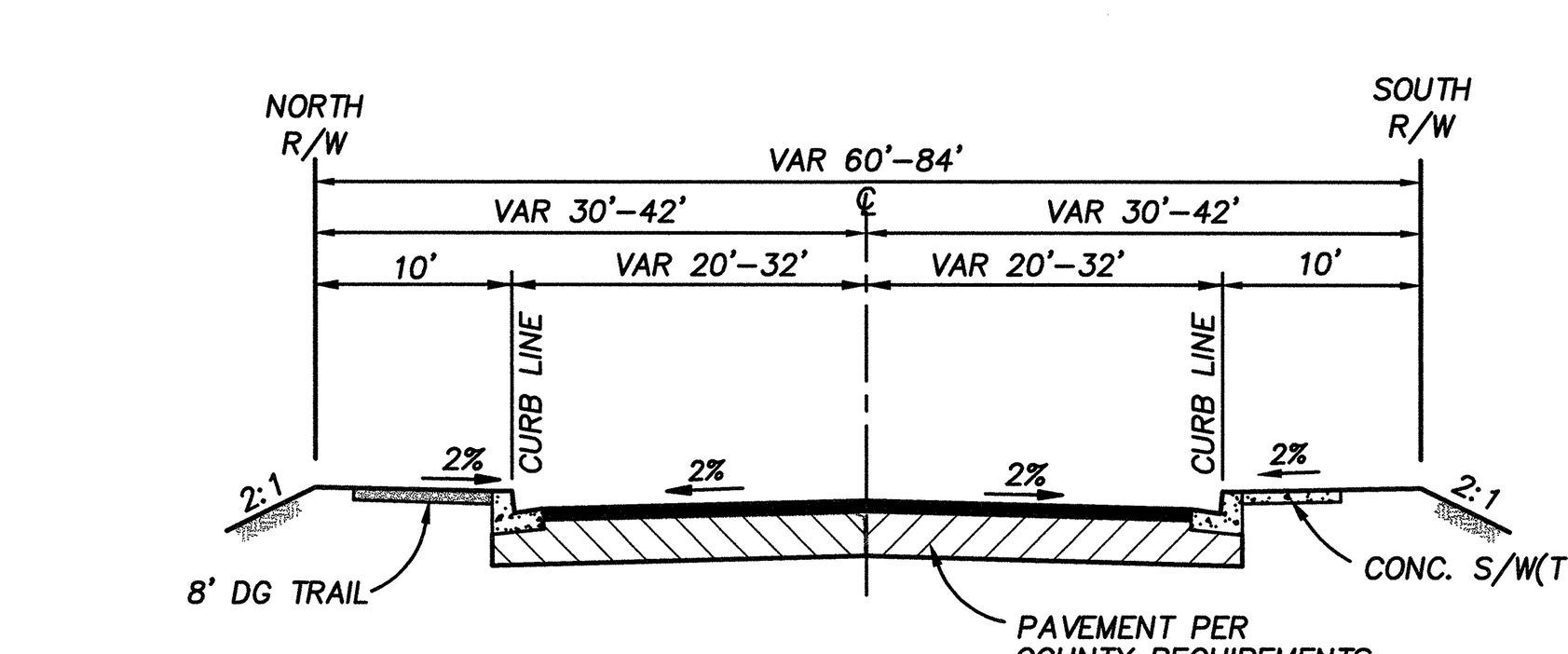


**TYPICAL SECTION**
**NEIGHBORHOOD STREETS (PUB)**
**PANKEY PLACE (STA 19+56.57 TO 25+98.80)**
NO SCALE

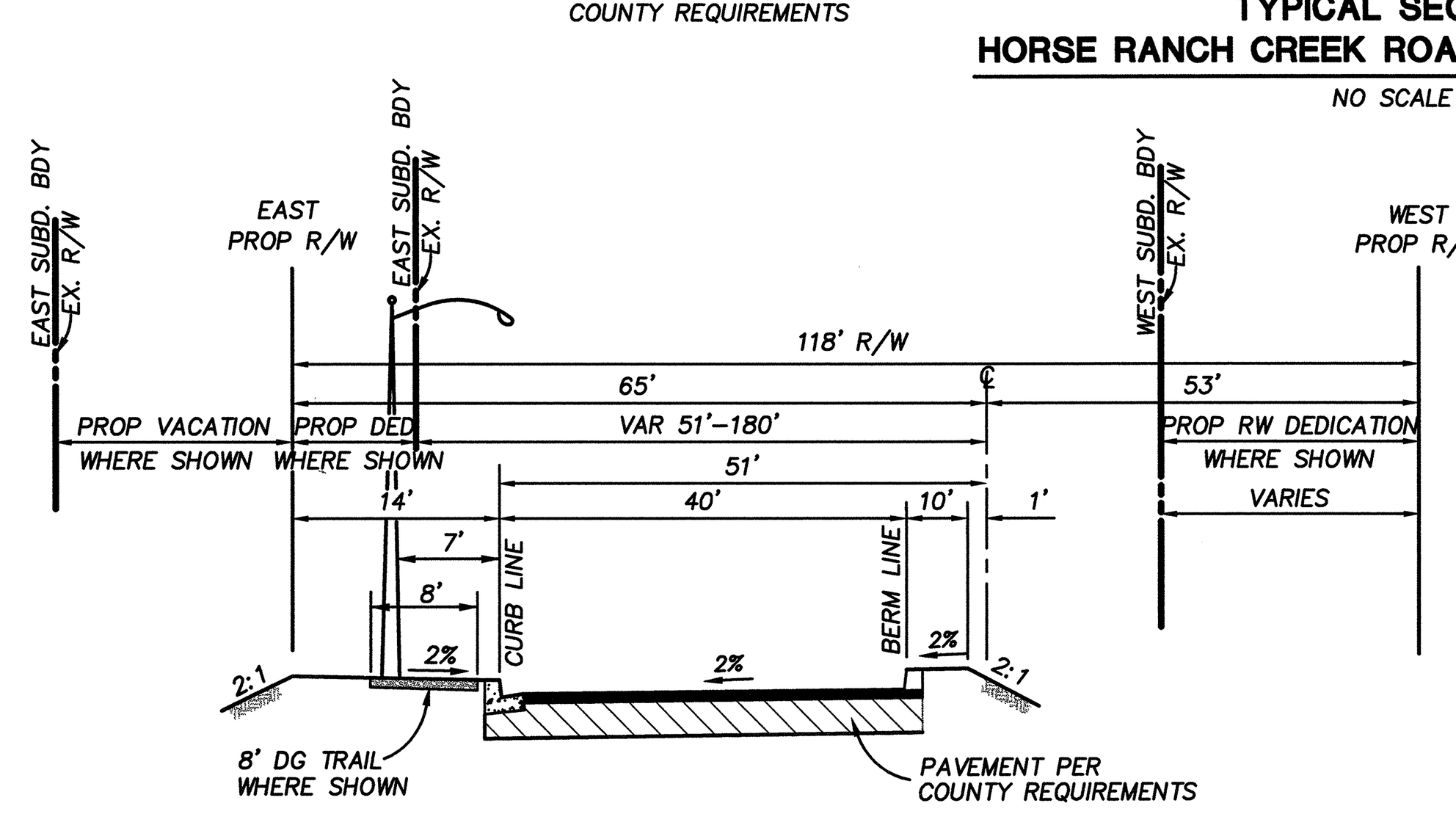


**TYPICAL SECTION**
**PANKEY RD SOUTH OF HORSE RANCH CREEK BRIDGE (PUB)**
NO SCALE

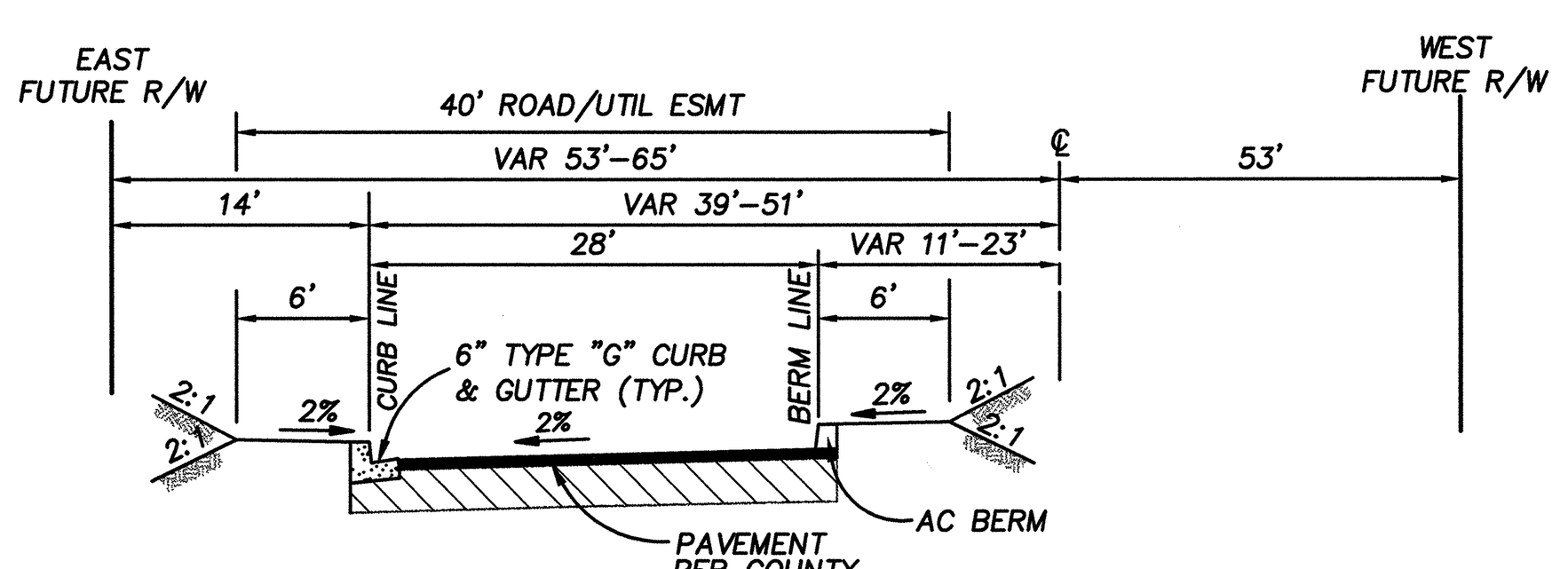


**TYPICAL SECTION**
**PANKEY RD NORTH OF HORSE RANCH CREEK BRIDGE (PUB)**
NO SCALE

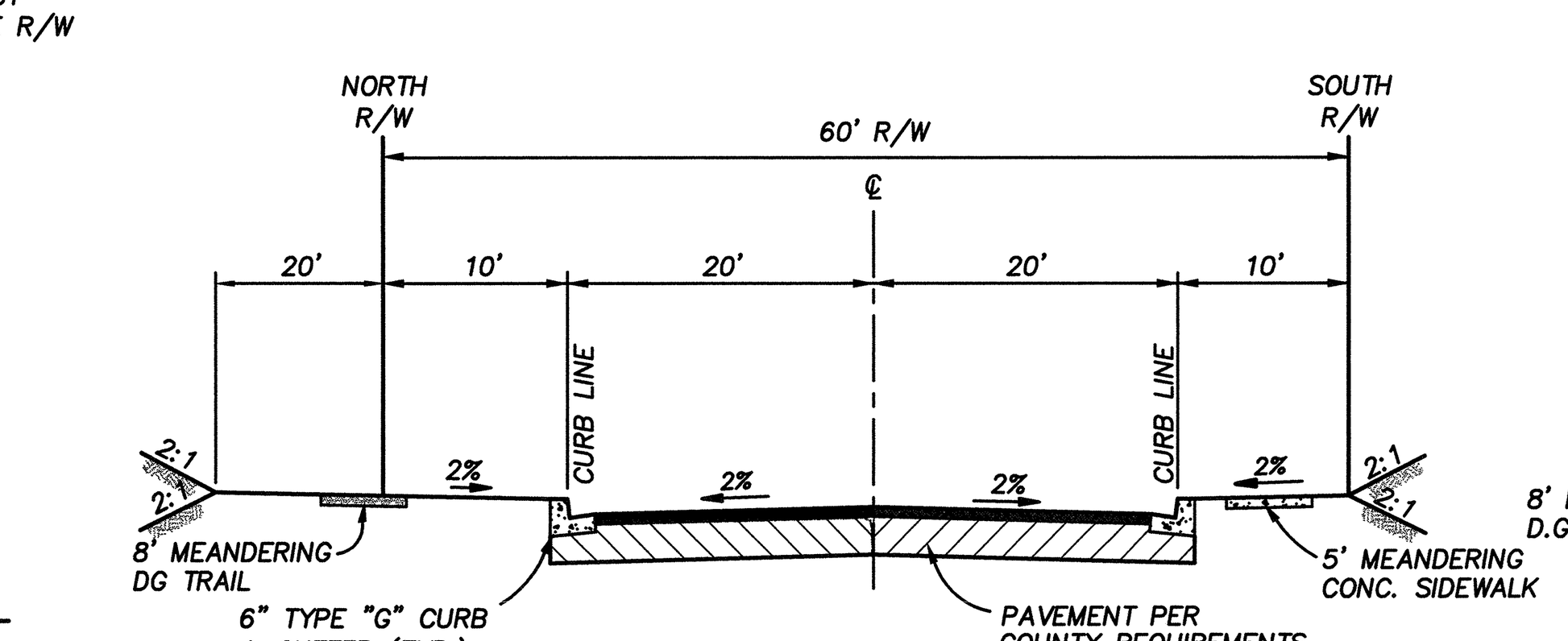


**TYPICAL SECTION**
**BALTIMORE ORIOLE ROAD (PUBLIC)**
NO SCALE

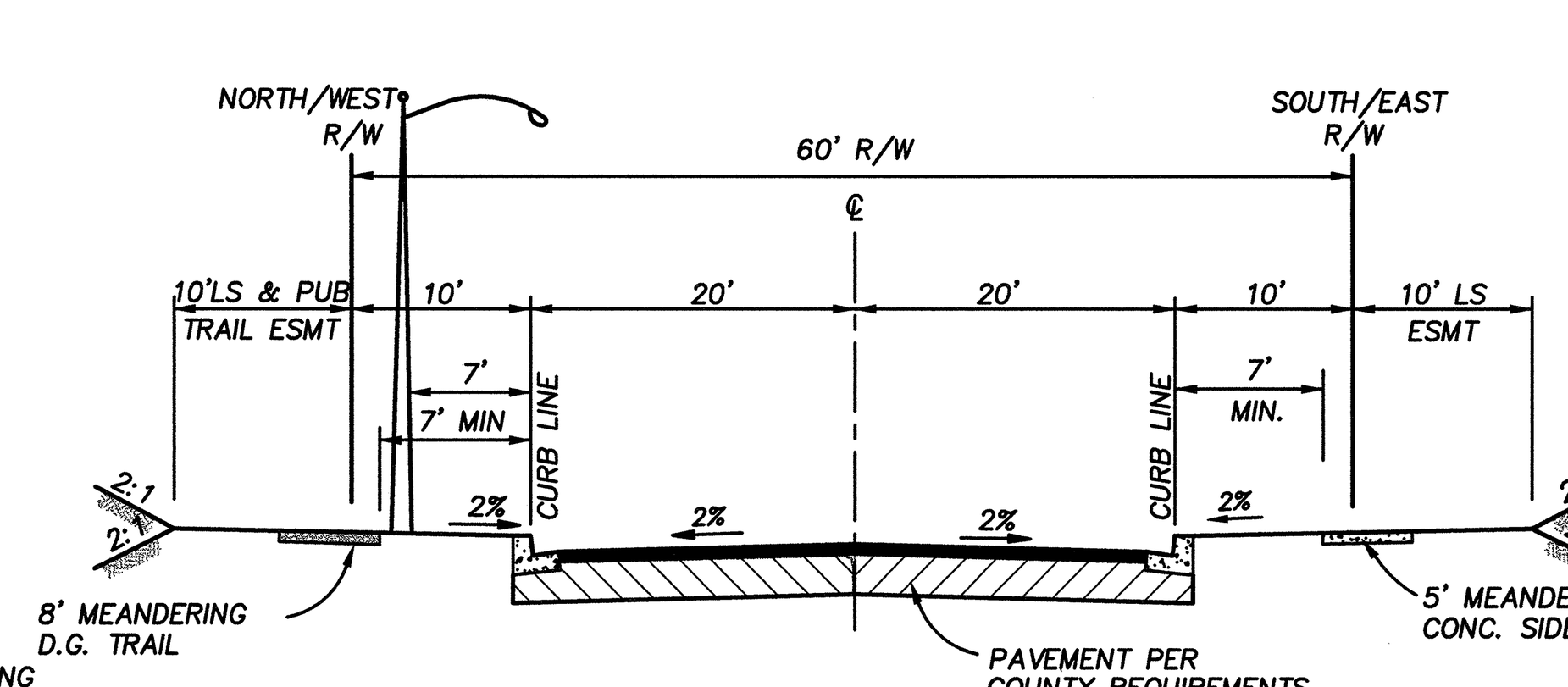


**TYPICAL SECTION**
**NEIGHBORHOOD STREETS**
**LONGSPUR RD. (PUBLIC)**
NO SCALE

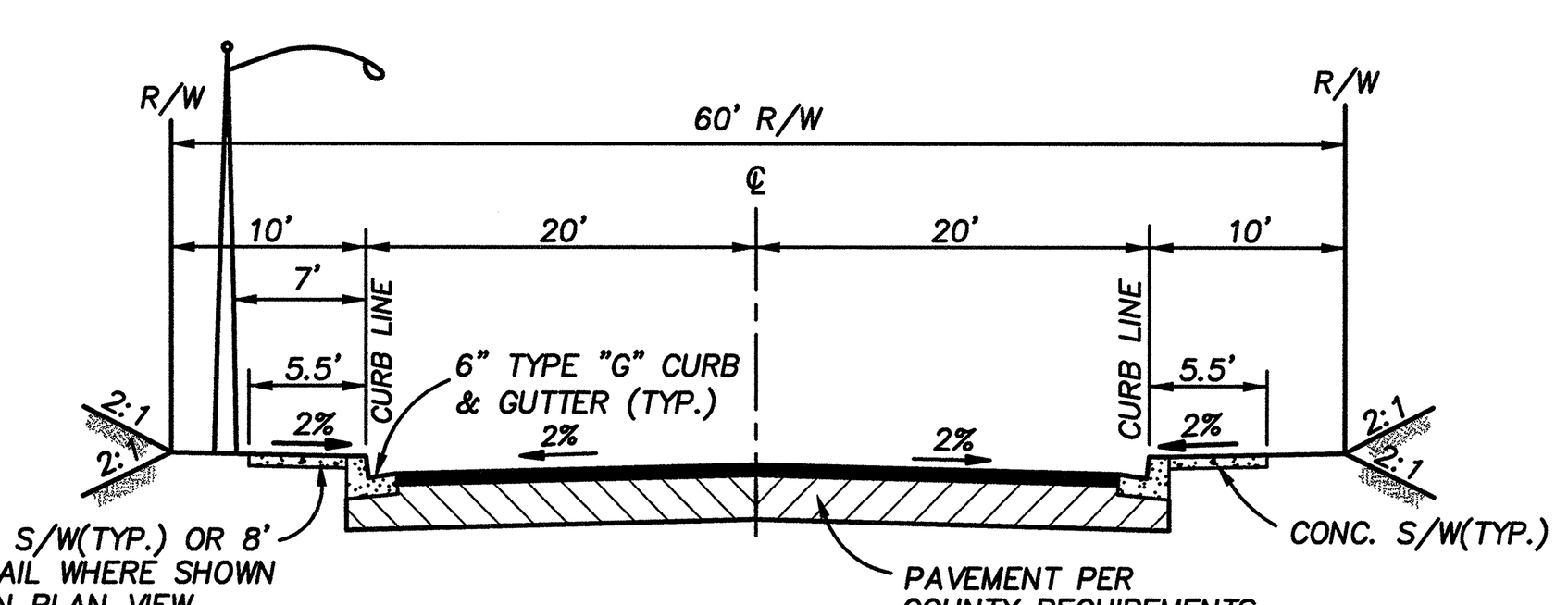


**TYPICAL SECTION**
**NEIGHBORHOOD STREETS (PUBLIC)**
**FRIGATE BIRD RD., GREY GOOSE LANE, SPOTTED SANDPIPER ST. (STA 10+00.00 TO 13+56.16., BELTED KINGFISHER ROAD (STA 14+32.15 TO 36+93.23)., SONG SPARROW DRIVE (STA 32+12.79 TO 33+20.00), WHISTLING SWAN WAY, JAEGER STREET, RUFFLED GROUSE ROAD, SNOWY EGRET LANE, NIGHT OWL STREET, PANKEY PLACE (STA 9+44.02 TO 19+56.57)**
NO SCALE

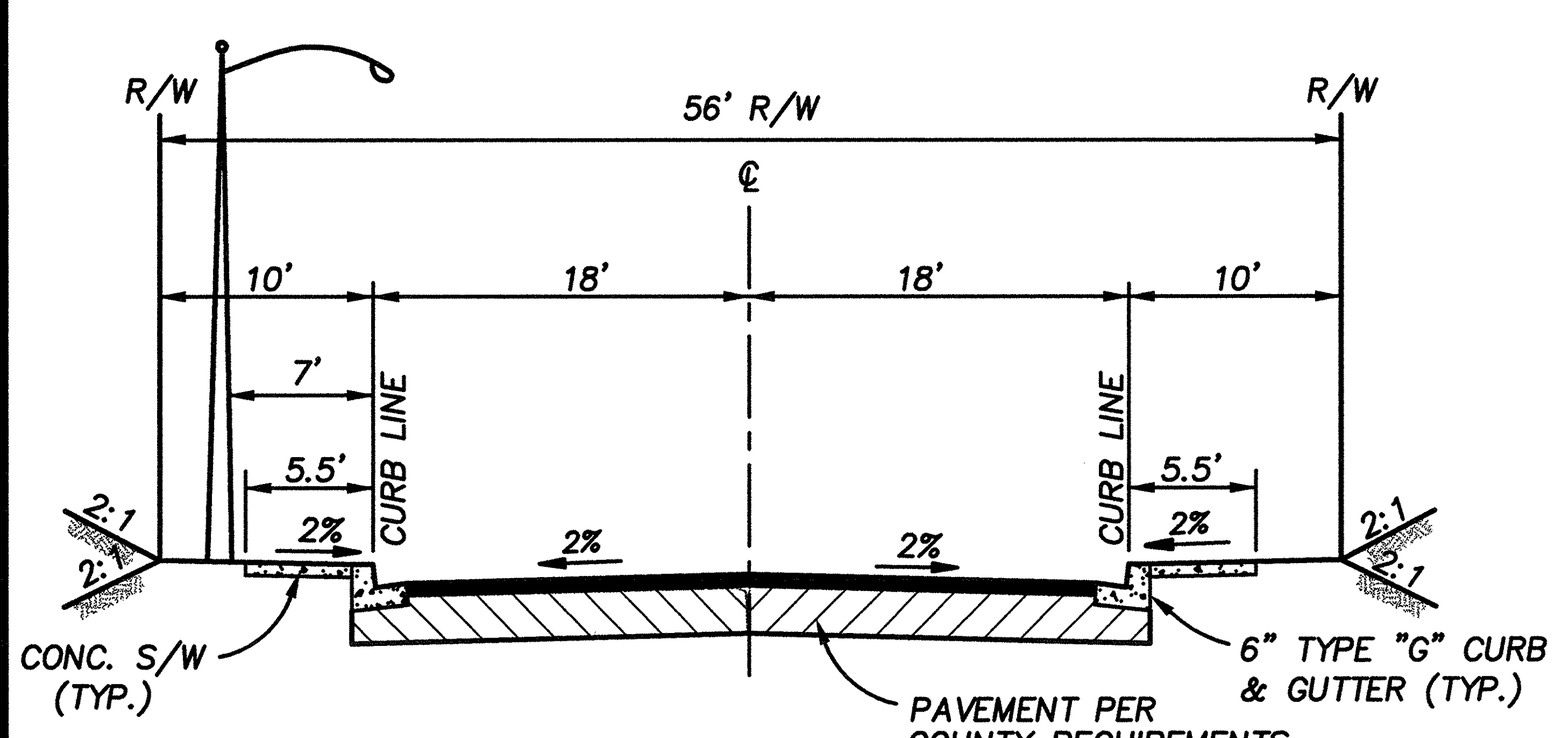


**TYPICAL SECTION**
**NEIGHBORHOOD STREETS (PUBLIC)**
**PONYFOOT CT., CARACARA CT., OSTRICH WAY, BELTED KINGFISHER (STA. 10+00.00 TO 14+32.15)., BIRDWATCHER CT., SPOTTED SANDPIPER (STA. 13+56.16 TO 18+96.03)., FALCON VIEW WAY, DUSKY WING LANE, PHALAROPE ST. & RINGLET CT.**
NO SCALE

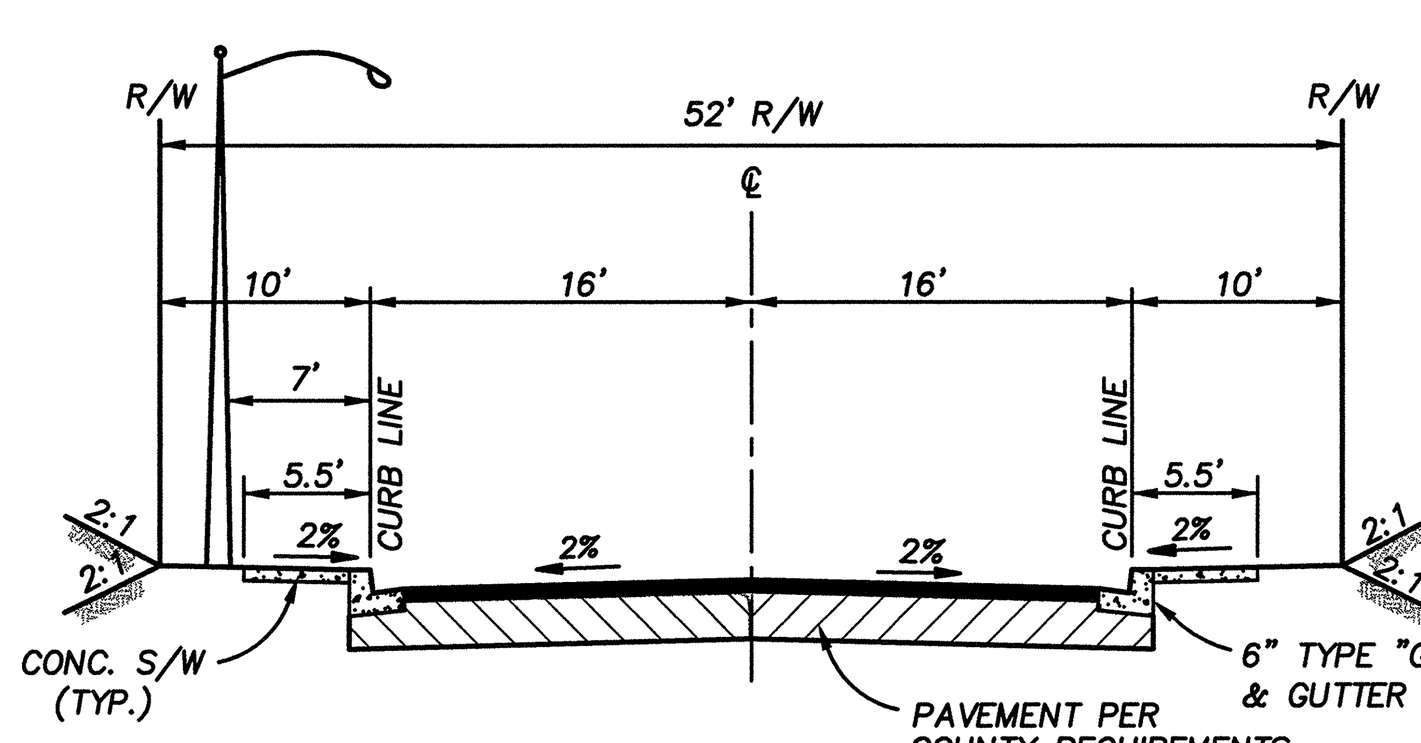


**TYPICAL SECTION**
**NEIGHBORHOOD STREETS (PUBLIC)**
**SONG SPARROW DRIVE (STA 25+43.64 TO 32+12.79)**
NO SCALE

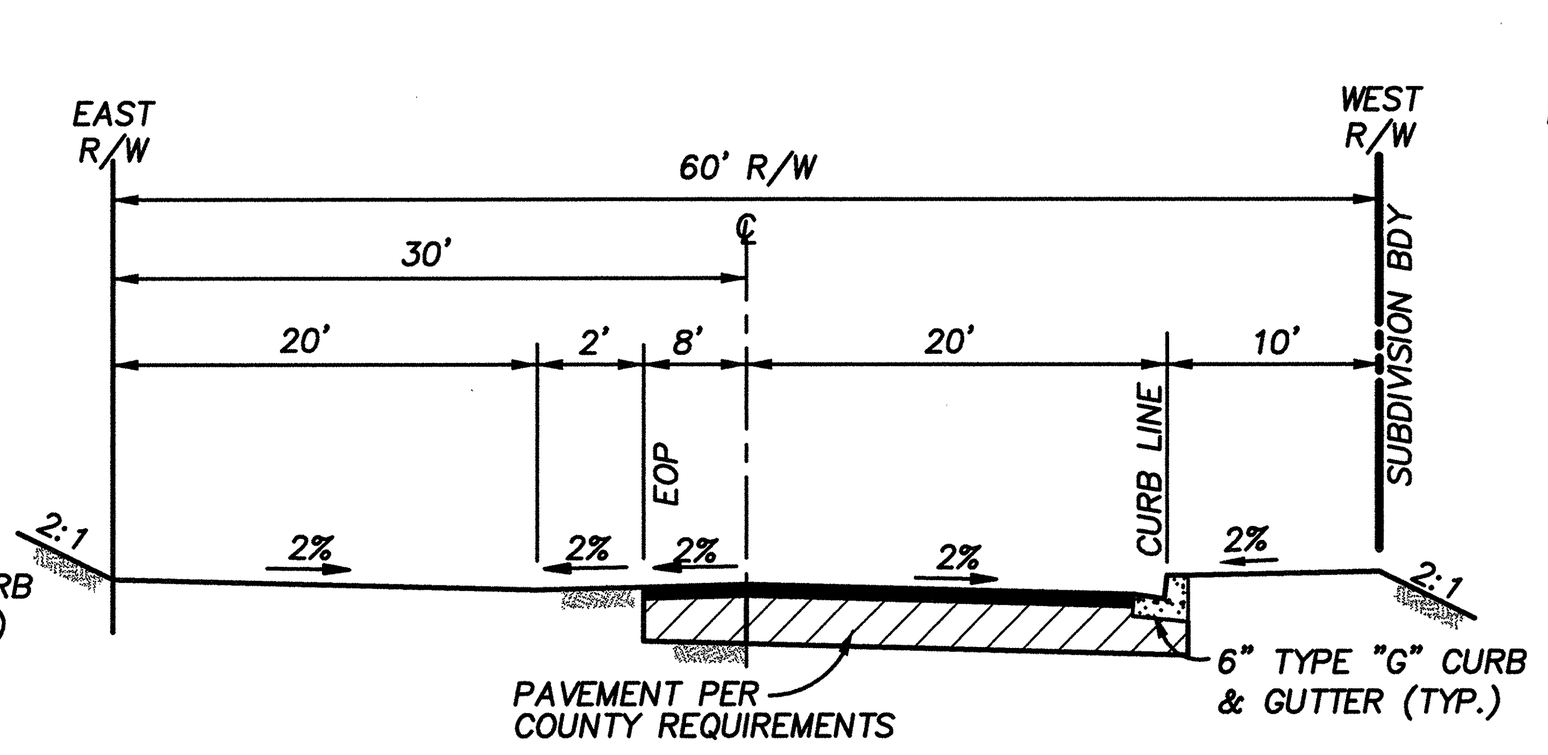


**TYPICAL SECTION**
**SONG SPARROW DRIVE (PUB)**
**(STA. 33+20.00 TO 42+09.79**
NO SCALE

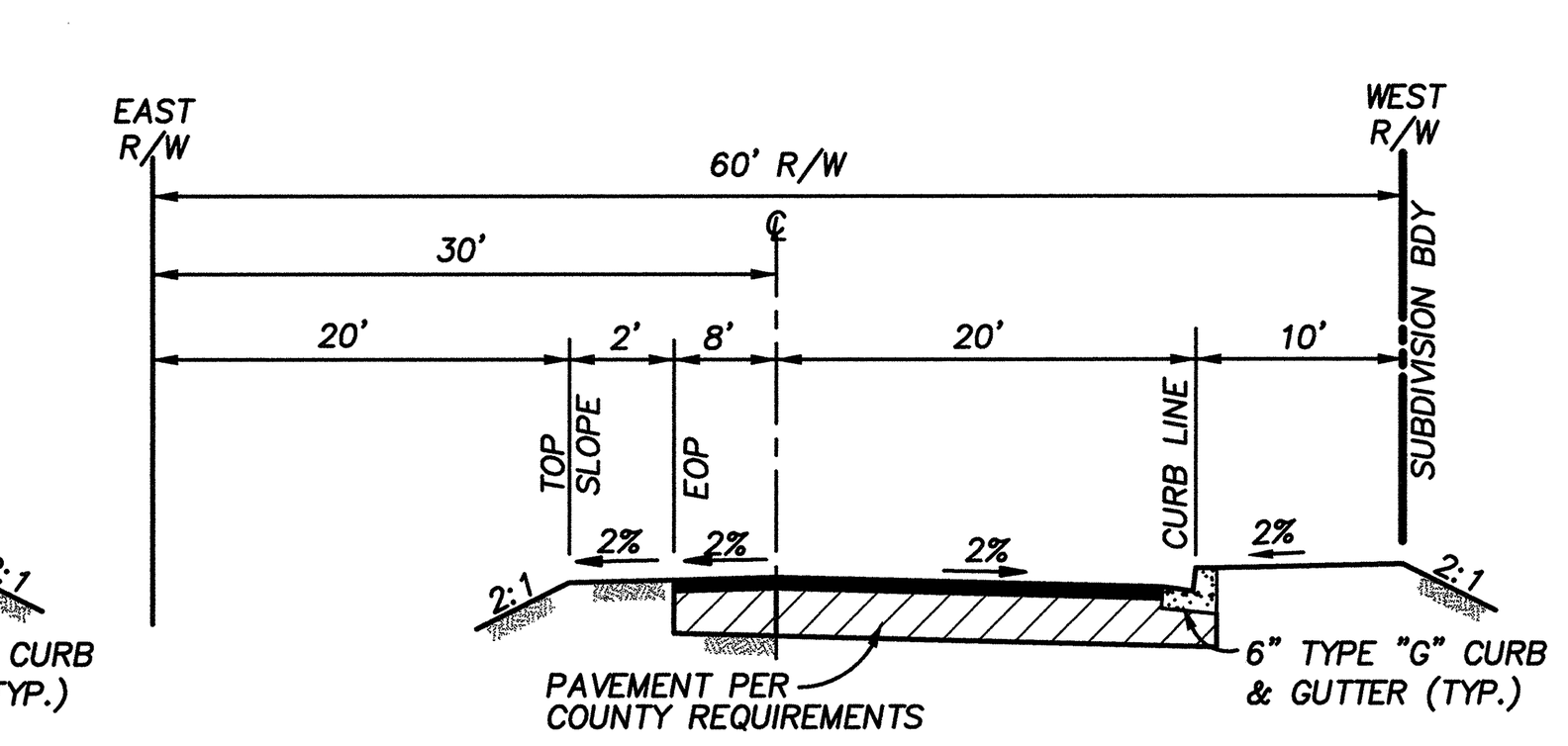


**TYPICAL SECTION**
**SONG SPARROW DRIVE (PUB)**
**(STA. 42+09.79 TO 47+49.99)**
NO SCALE

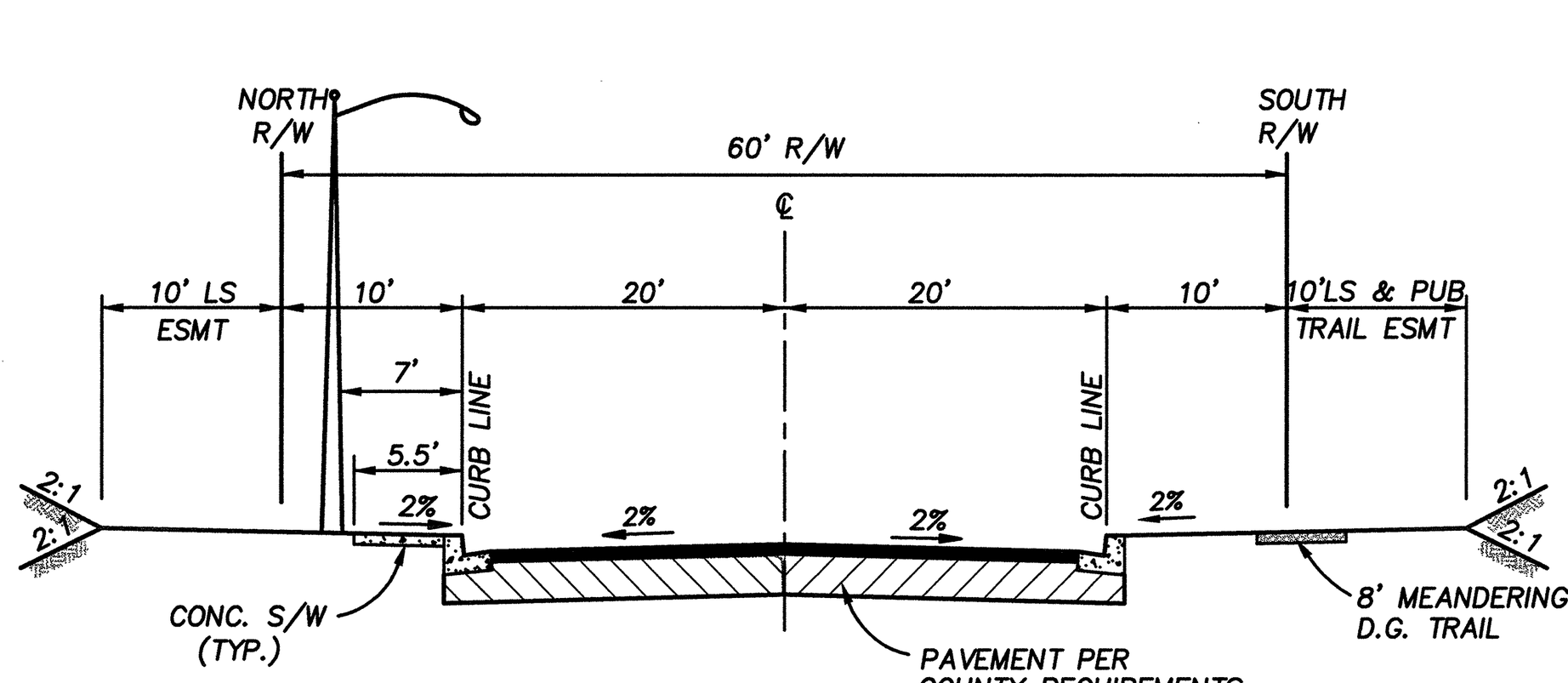


**TYPICAL SECTION**
**NEIGHBORHOOD STREETS**
**HARVEST GLEN LANE (PUBLIC)**
NO SCALE

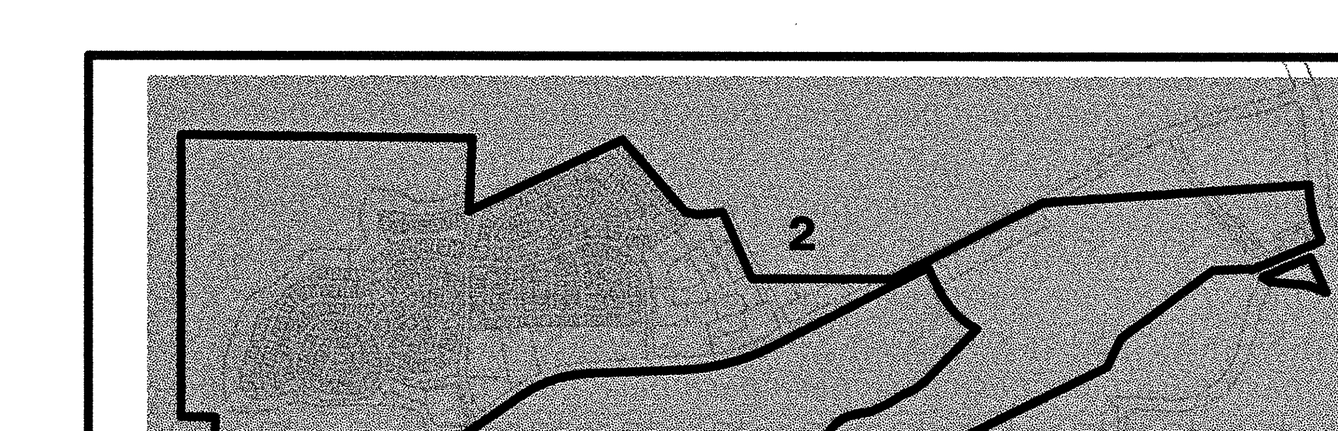


**SHEET INDEX**
NOT TO SCALE

LANDMARK CONSULTING
Planning Engineering Surveying
9555 Genesee Avenue, Suite 200
San Diego, CA 92121, (858) 587-8070

**COUNTY OF SAN DIEGO TRACT 5338 RPL 7**
**VESTING TENTATIVE MAP FOR**

# CAMPUS PARK

# EXISTING EASEMENTS

**SHEET NO. 2 OF 11 SHEETS**

F:\06-14\TM\TM02.dwg 11/15/2010 11:12:21 AM PST

STEWART CANYON RD.

PANKEY ROAD

EX. PANKEY ROAD

APN 108-192-08

APN 108-421-02

APN 108-420-16

APN 108-420-04

APN 108-421-17

APN 108-421-16

APN 108-421-12

SUBDIVISION BOUNDARY

N89°59'19"W 2624.98'

N89°20'13"W 421.58

N00°25'49"E 330.14'

N00°25'49"E 1319.70'

N00°25'49"E 1319.70'

N00°25'49"E 1319.70

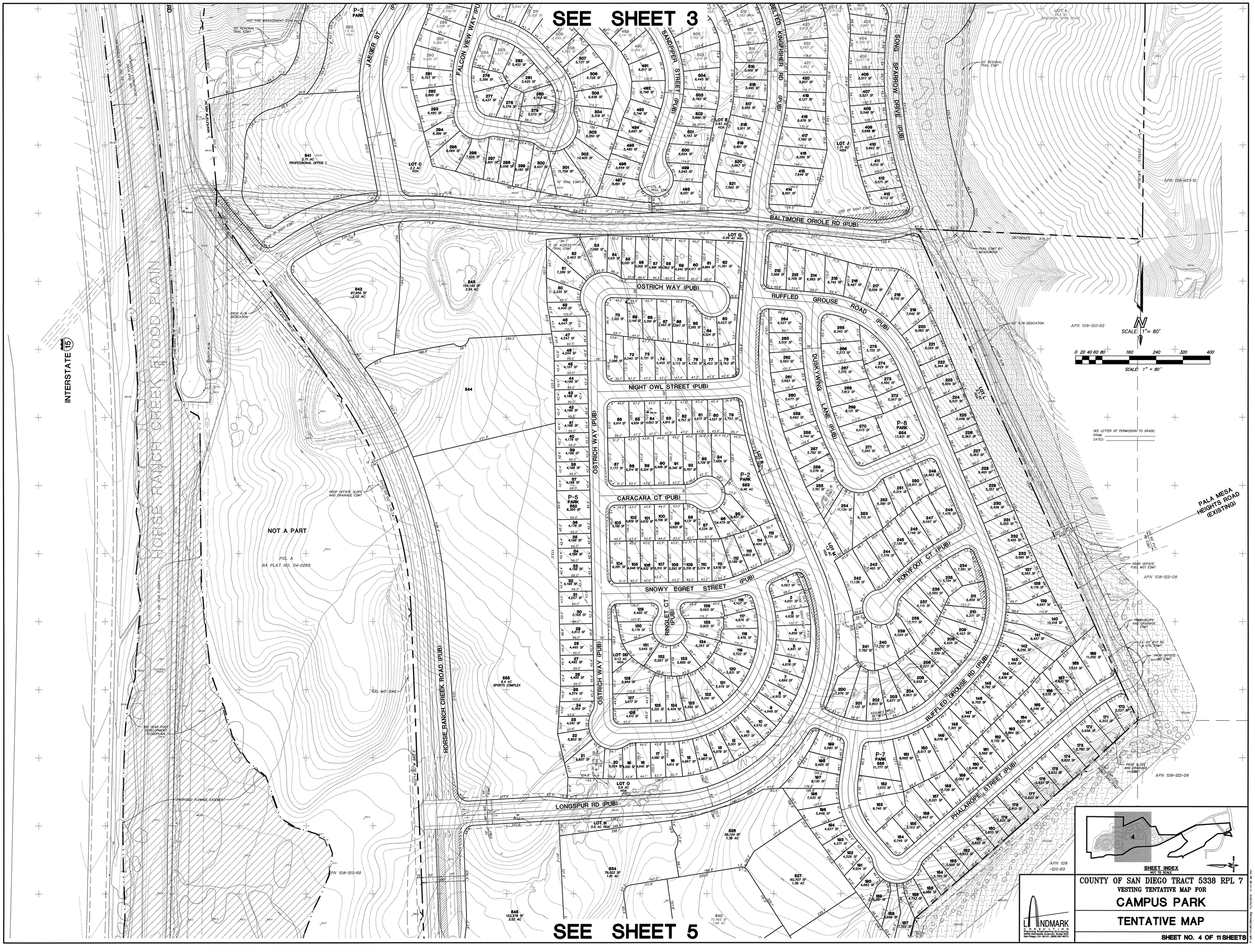


COUNTY OF SAN DIEGO TRACT 5338 RPL 7

VESTING TENTATIVE MAP FOR

# CAMPUS PARK

## TENTATIVE MAP

SHEET NO. 4 OF 11 SHEETS

LANDMARK CONSULTING
Planning Engineering Surveying
9555 Genesee Avenue, Suite 200
San Diego, CA 92121, (858) 587-6070

SEE SHEET 4

INTERSTATE 15

PROPOSED MEADOWOOD TM 5354

APN 108-120-65

APN 108-120-54

APN 108-121-18

APN 108-121-15

FUEL MGT ZONE

PROP OFFSITE SLOPE AND DRAINAGE ESMT

16' LS ESMT

PROP FUEL MGT ZONE/ESMT

PROP OFFSITE FUEL MGT ESMT

PROP SLOPE AND DRAINAGE ESMT

PROP OFFSITE RD ESMT

EX. PVT RD & UTILITY ESMT

NCTD BUS TURNOUT

HARVEST GLEN LANE

HORSE RANCH CREEK ROAD (PUB)

EX. 100 YR FLOODPLAIN

PROPOSED FLOWAGE EASEMENT

NOT A PART

PCL A
BA PLAT NO. 04-0293

EX. CALTRANS R/W

EX. EASEMENT

EXISTING 69 K.V. POWER LINE

SUBDIVISION BOUNDARY

6' EX. 2" WIDE UTILITY ESMT TO SDGE

EX. UTILITY ESMTS

EX. 6"

20' UTIL ESMT

100 YR POST DEVELOPMENT FLOODPLAIN

PROP OFFSITE SLOPE/DRAINAGE AND FUEL MGT ZONE/ESMT

PROP OFFSITE SLOPE AND DRAINAGE ESMT

SEE LETTER OF PERMISSION TO GRADE
FROM:
DATED:

| | | |
|---|---|---|
| 533 | 52,992 SF | 1.22 AC |
| 534 | 79,922 SF | 1.85 AC |
| 535 | 47,169 SF | 1.08 AC |
| 536 | 35,480 SF | 0.81 AC |
| 537 | 35,408 SF | 0.81 AC |
| 538 | 33,866 SF | 0.78 AC |
| 539 | 35,813 SF | 0.82 AC |
| 540 | 72,465 SF | 1.66 AC |
| 545 | 153,378 SF | 3.52 AC |
| 546 | 57,730 SF | 1.33 AC |
| 547 | 59,112 SF | 1.36 AC |
| 548 | 84,992 SF | 1.95 AC |
| 622 | 37,099 SF | 0.85 AC |
| 623 | 57,340 SF | 1.32 AC |
| 624 | 81,532 SF | 1.87 AC |
| 625 | 53,229 SF | 1.22 AC |
| 626 | 60,443 SF | 1.39 AC |
| 627 | 60,707 SF | 1.39 AC |
| 528 | 67,302 SF | 1.54 AC |
| 529 | 56,627 SF | 1.30 AC |
| 530 | 62,457 SF | 1.43 AC |
| 531 | 53,077 SF | 1.22 AC |
| 532 | 50,955 SF | 1.17 AC |

LOT S
2.3 AC
BIO-OPEN SPACE

LOT V
10.1 AC
BIO-OPEN SPACE

SCALE: 1" = 80'

0 20 40 60 80 160 240 320 400

SCALE: 1" = 80'

SEE SHEET 6

SHEET INDEX
NOT TO SCALE

COUNTY OF SAN DIEGO TRACT 5338 RPL 7
VESTING TENTATIVE MAP FOR
CAMPUS PARK

TENTATIVE MAP

SHEET NO. 5 OF 11 SHEETS

LANDMARK CONSULTING
5900 Cliffridge Avenue, Suite 200
San Diego, CA 92121, (858) 587-6070

G:\pw-41\DWG\Campus Park\TM\CP5354 11-23-16.dwg 11/23/2016 11:23:35 AM PST

SEE SHEET 5

INTERSTATE 15

LOT V
10.31 AC
BIO-OPEN SPACE

APN 108-121-18

APN 108-121-16

APN 108-121-14

APN 126-081-01

APN 126-081-07

NOT A PART
PCL A
BA PLAT NO. 04-0253

LOT T
0.2 AC
HOA LOT

LOT V
94.7 AC
BIO-OPEN SPACE

HORSE RANCH CREEK ROAD (PUBLIC)

HORSE RANCH CREEK FLOODPLAIN

PALA MESA DR

PANKEY RD (PUB)

CAMPUS PARK WEST
TM 5424

PROPOSED
MEADOWOOD
TM 5354

100 YR POST DEVELOPMENT FLOODPLAIN

EX. 100 YR FLOODPLAIN

PROPOSED FLOWAGE EASEMENT

EX. DRAINAGE ESMT

EX. TEMP. CONST. EASEMENT

EX. 20' SWR ESMT.

EX. ROAD, SLOPE & DRAINAGE ESMT DEDICATED & REJECTED

SUBDIVISION BOUNDARY

PROP OFFSITE SLOPE/DRAINAGE AND FUEL MGT ZONE/ESMT

PROP OFFSITE SLOPE AND DRAINAGE ESMT

16' LS ESMT

20' UTIL ESMT

EX. 4' & 12' WIDE UTILITY ESMT TO SDGE

PROP OFFSITE SLOPE/DRAINAGE AND FUEL MGT ZONE/ESMT

PROP 40' RD/UTIL ESMT

PROP OFFSITE SLOPE, DRAINAGE AND FUEL MGT ZONE/ESMT

FUTURE 72' R/W AND WIDENING BY OTHERS

FUTURE 106' R/W AND WIDENING BY OTHERS

NOTD BUS TURNOUT

PROP FUEL MGT ZONE/ESMT

EX. R/W PER RS 359

PROP OFFSITE SLOPE AND DRAINAGE ESMT

EX. SWR ESMT

SEE LETTER OF PERMISSION TO GRADE FROM: _____ DATED: _____

SCALE: 1"= 80'

0 20 40 60 80 160 240 320 400

SCALE: 1" = 80'

SEE SHEET 7

SHEET INDEX
NOT TO SCALE

COUNTY OF SAN DIEGO TRACT 5338 RPL 7
VESTING TENTATIVE MAP FOR
# CAMPUS PARK
## TENTATIVE MAP

SHEET NO. 6 OF 11 SHEETS

LANDMARK CONSULTING
Planning, Engineering, Surveying
9665 Chesapeake Avenue, Suite 200
San Diego, CA 92121, (858) 587-9270

P:\Dwfs\TM\Vesting.dwg 11/13/2020 11:22:52 AM PST

# SEE SHEET 6

PALA MESA DR
EXISTING BRIDGE
FUTURE 72' R/W AND WIDENING BY OTHERS
PROP OFFSITE SLOPE, DRAINAGE AND FUEL MGT ZONE/ESMT
PROP 40' RD/UTIL ESMT
APN 126-081-01
PANKEY RD (PUB)
FUTURE 108' R/W AND WIDENING BY OTHERS
SEE LETTER OF PERMISSION TO GRADE FROM: DATED:
CAMPUS PARK WEST TM 5424
EX. 100 YR FLOODPLAIN
PROPOSED FLOWAGE EASEMENT
100 YR POST DEVELOPMENT FLOODPLAIN
HORSE RANCH CREEK FLOODPLAIN
EX. SWR ESMT
EX. FLOWAGE ESMT
EX. PIPELINE ESMT
EX. UTIL ESMT
EX. CALTRANS R/W
PROP R/W TO BE VACATED BY OTHERS
PROP R/W DEDICATION
LOT V 94.1 AC BIO-OPEN SPACE
LOT W 1.6 AC BIO-OPEN SPACE
LOT X 1.6 AC HOA LOT
LOT Y 7.8 AC BIO-OPEN SPACE
667 0.6 AC STAGING AREA
668 0.2 AC PUMP STATION
PROP R/W DEDICATION
PROP FUEL MGT ZONE/ESMT
EX. R/W PER RS 358
PROP OFFSITE SLOPE AND DRAINAGE ESMT
SUBDIVISION BOUNDARY
NOT A PART
PROPOSED MEADOWOOD TM 5354
FUEL MGT ZONE/ESMT
PROP OFFSITE SLOPE, DRAINAGE AND FUEL MGT ZONE/ESMT
PROP OFFSITE 60'-84' R/W
PROP OFFSITE SLOPE, DRAINAGE AND FUEL MGT ZONE/ESMT
APN 126-081-06
APN 126-081-04
PROP OFFSITE SLOPE AND DRAINAGE ESMT
HORSE RANCH CREEK ROAD (PUBLIC)
EX. R/W PER RS 358
EX. R/W PER CHG RTE 6, DIV 11
MEADOWOOD TM 5354
CAMPUS PARK TM 5338
NCTD BUS TURNOUT
APN 126-082-04
SR 76 (PALA ROAD)
EX. CALTRANS R/W
APN 126-082-05
APN 126-083-07
APN 126-083-01
CAMPUS PARK WEST TM 5424
EX. PANKEY RD
100 YR POST DEVELOPMENT FLOODPLAIN
FUTURE 118' R/W AND WIDENING BY OTHERS
FUTURE 'E' OF ROAD BY OTHERS
PROP 40' RD/UTIL ESMT
PROP OFFSITE SLOPE, DRAINAGE AND FUEL MGT ZONE/ESMT
RANCHO MONSERATE MAP 827
SCALE: 1" = 80'
0 20 40 60 80 160 240 320 400
SCALE: 1" = 60'

SHEET INDEX
NOT TO SCALE

COUNTY OF SAN DIEGO TRACT 5338 RPL 7
VESTING TENTATIVE MAP FOR
**CAMPUS PARK**
**TENTATIVE MAP**
SHEET NO. 7 OF 11 SHEETS

LANDMARK CONSULTING
2280 Grand Ave Avenue, Suite 200
Vista, CA 92081, (760) 599-0962
San Diego, CA 92121, (858) 587-9270

Date: 11/15/2023 11:30:16 AM PST

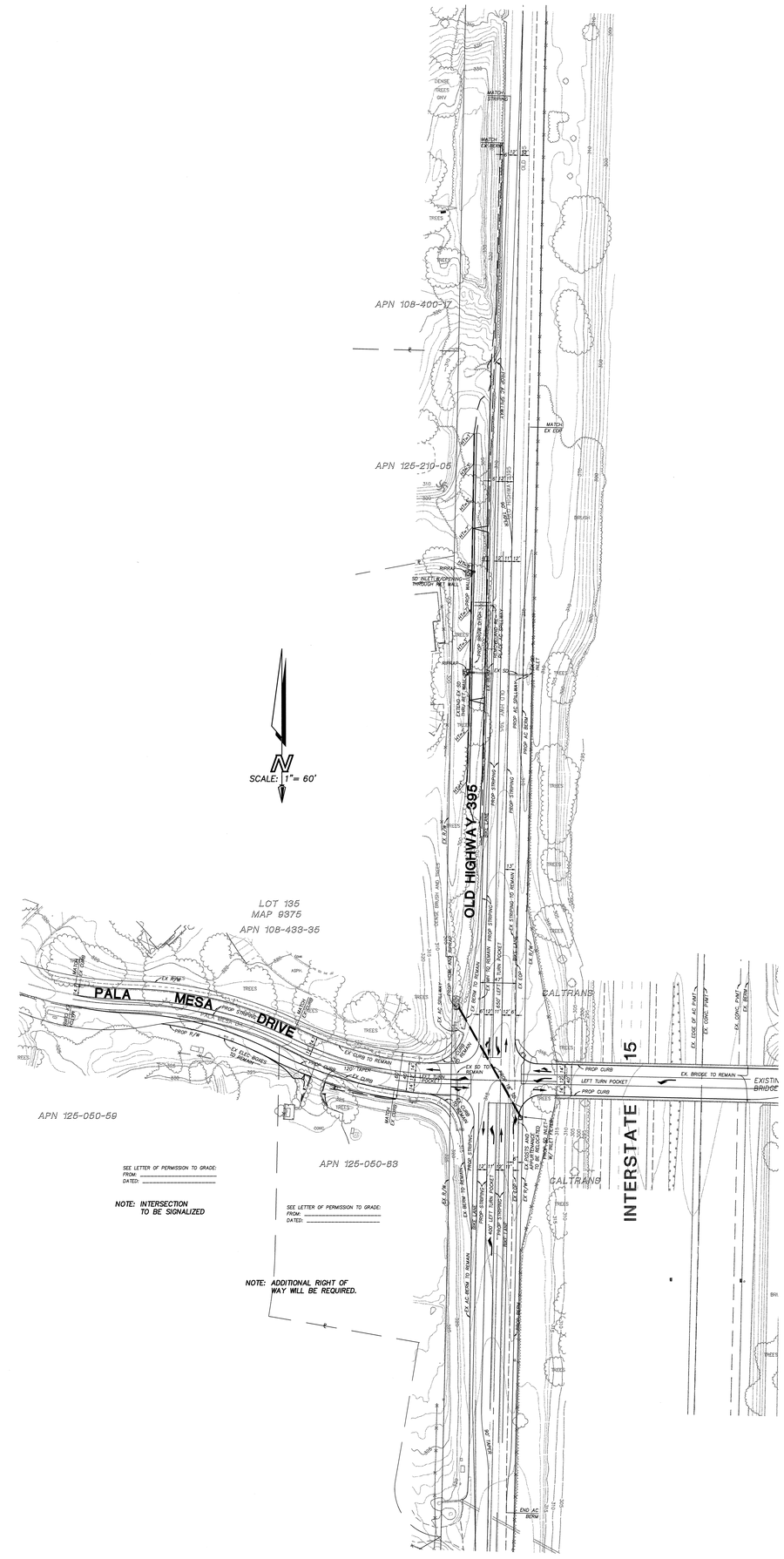


PALA MESA DR/OLD HWY 395

0 15 30 45 60 120 180 240 300

SCALE: 1" = 60'

LANDMARK CONSULTING
Planning Engineering Surveying
9555 Genesee Avenue, Suite 200
San Diego, CA 92121, (858) 587-8070

COUNTY OF SAN DIEGO TRACT 5338 RPL 7
VESTING TENTATIVE MAP FOR
**CAMPUS PARK**

**TENTATIVE MAP**
**OFFSITE INTERSECTION IMPROVEMENTS**

SHEET NO. 8 OF 11 SHEETS

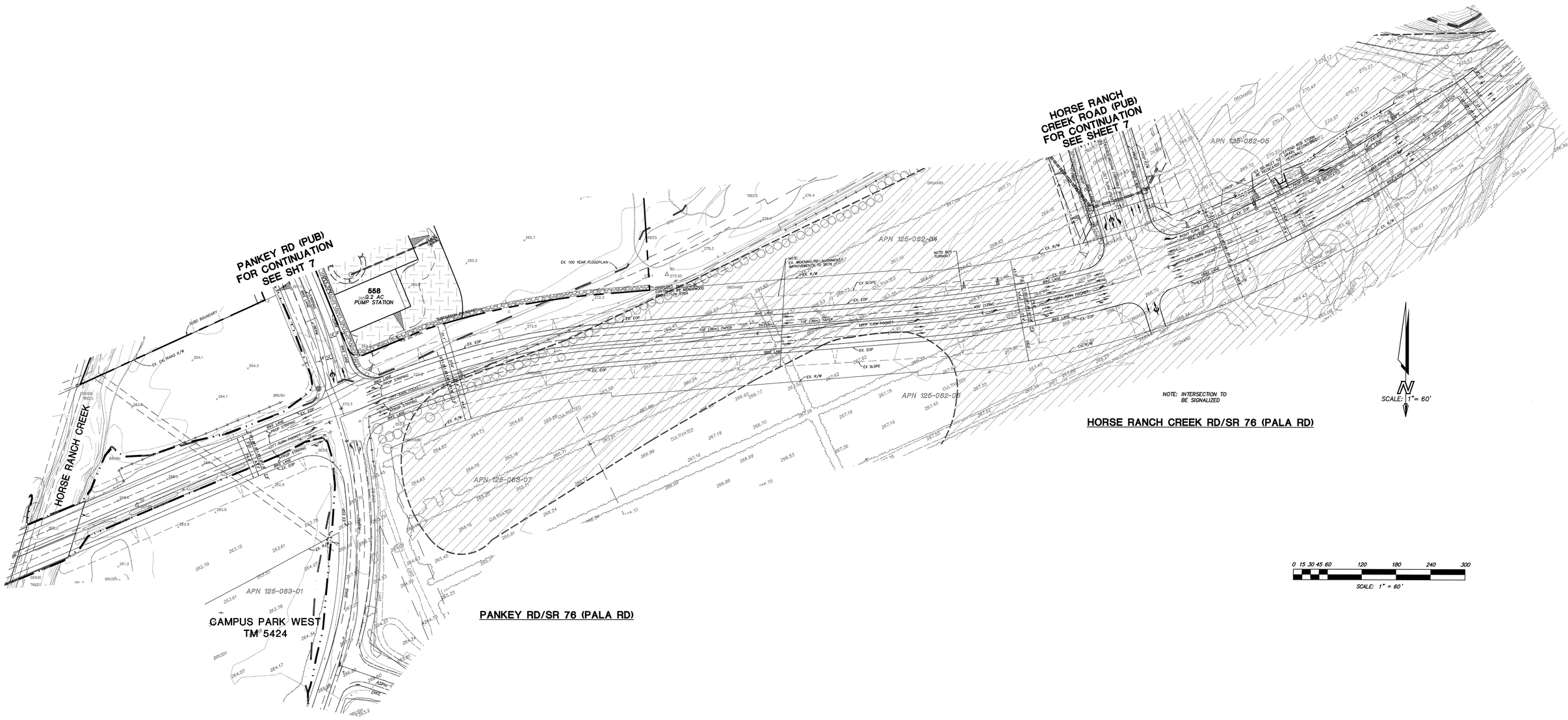


COUNTY OF SAN DIEGO TRACT 5338 RPL 7
VESTING TENTATIVE MAP FOR
**CAMPUS PARK**

**TENTATIVE MAP**
**OFFSITE INTERSECTION IMPROVEMENTS**

LANDMARK CONSULTING
Planning Engineering Surveying
9555 Genesee Avenue, Suite 200
San Diego, CA 92121, (858) 587-8070

SHEET NO. 9 OF 11 SHEETS

RECHE RD/OLD HWY 395

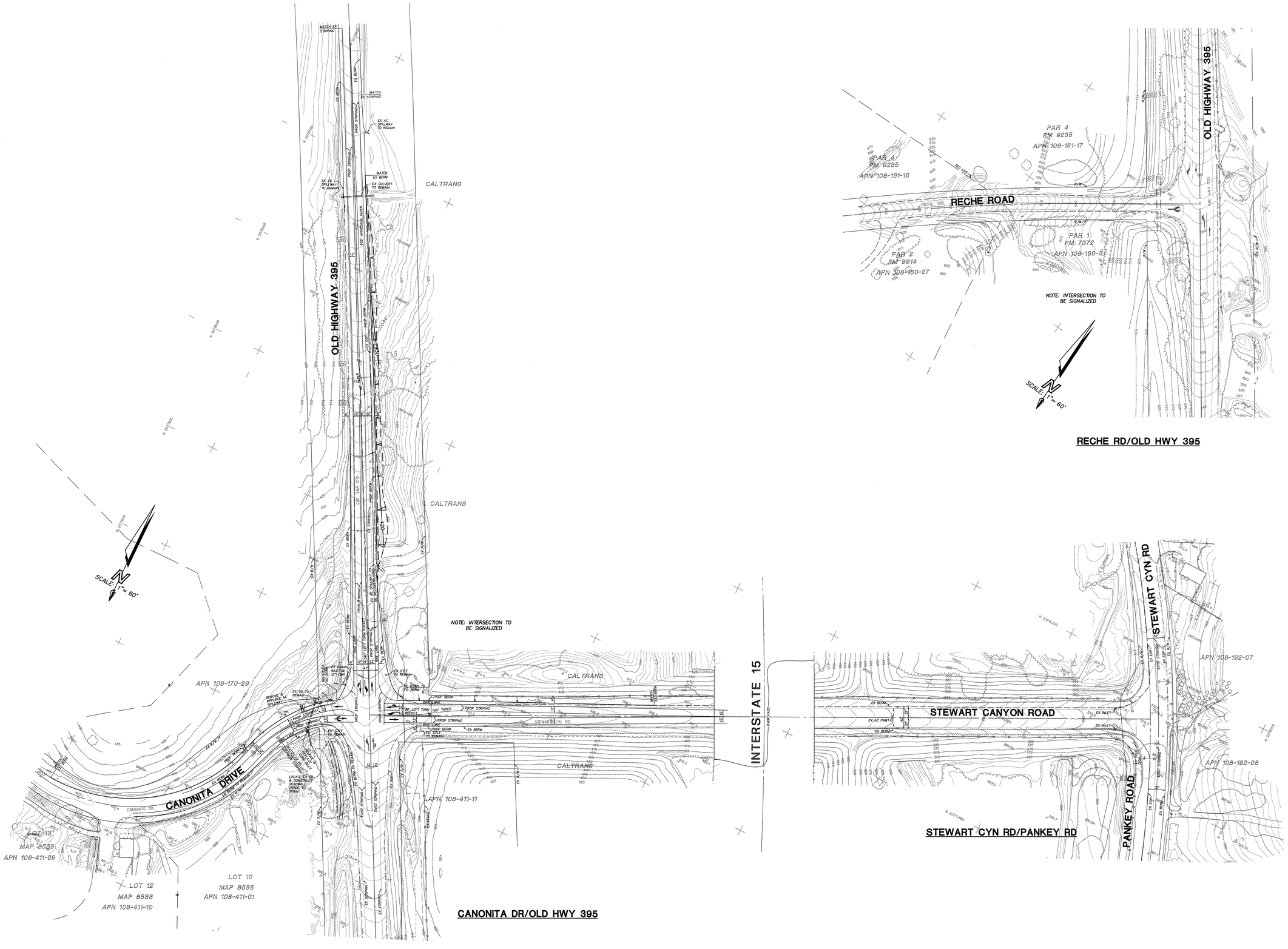


CANONITA DR/OLD HWY 395

STEWART CYN RD/PANKEY RD

0 15 30 45 60 120 180 240 300

SCALE: 1" = 60'

LANDMARK CONSULTING
Planning Engineering Surveying
9555 Genesee Avenue, Suite 200
San Diego, CA 92121, (858) 587-8070

COUNTY OF SAN DIEGO TRACT 5338 RPL 7
VESTING TENTATIVE MAP FOR
**CAMPUS PARK**

**TENTATIVE MAP**
**OFFSITE INTERSECTION IMPROVEMENTS**

SHEET NO. 10 OF 11 SHEETS

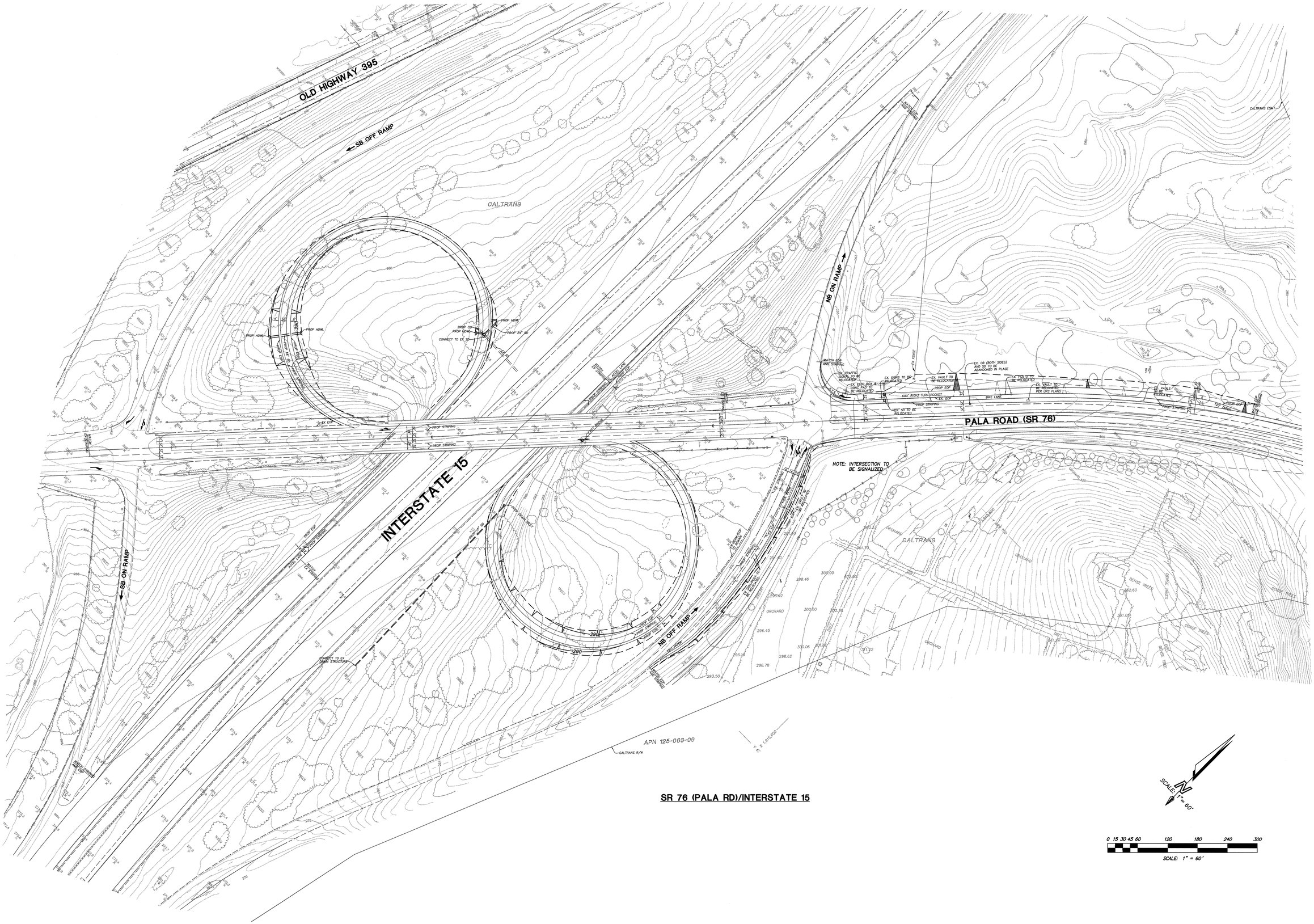


SR 76 (PALA RD)/INTERSTATE 15

LANDMARK CONSULTING
Planning Engineering Surveying
9555 Genesee Avenue, Suite 200
San Diego, CA 92121, (858) 587-8070

COUNTY OF SAN DIEGO TRACT 5338 RPL 7
VESTING TENTATIVE MAP FOR
**CAMPUS PARK**

**TENTATIVE MAP**
**OFFSITE INTERSECTION IMPROVEMENTS**

SHEET NO. 11 OF 11 SHEETS