By using these standard plans, the user agrees to release the County of San Diego from any and all claims, liabilities, suits, and demands on account of any injury, damage, or loss to persons or property, including injury or death, or economic losses, arising out of the use of these construction documents. The use of these plans does not eliminate or reduce the user's responsibility to verify any and all information.

ENGINEERING SCALE: 1" =

BMP LEGEND

PDS 659 — BROW DITCH
PDS 659 — BERM
DIRECTION OF LOT DRAINAGE

MATERIALS & WASTE MANAGEMENT BMPs:

- WM-1 MATERIAL DELIVERY & STORAGE
- WM-4 SPILL PREVENTION AND CONTROL
- WM-8 CONCRETE WASTE MANAGEMENT
- WM-5 SOLID WASTE MANAGEMENT
- WM-9 SANITARY WASTE MANAGEMENT
- WM-6 HAZARDOUS WASTE MANAGEMENT

TEMPORARY RUNOFF CONTROL BMPs:

- SS-2 PRESERVATION OF EXISTING VEGETATION (PEV)
- SS-3 BONDED OR STABILIZED FIBER MATRIX (WINTER) (M)
- SS-4 HYDROSEEDING (SUMMER) (TSP)
- SS-6 / SS-8 STRAW OR WOOD MULCH (S/W)
- SS-7 PHYSICAL STABILIZATION (WINTER) (EBM)
- SS-10 ENERGY DISSIPATOR
- SC-1 SILT FENCE
- SC-2 SEDIMENT / DESILTING BASIN
- SC-5 FIBER ROLLS (FR)
- SC-6 / SC-8 GRAVEL OR SAND BAGS
- SC-7 STREET SWEEPING AND VACUUMING
- SC-10 STORM DRAIN INLET PROTECTION
- NS-2 DEWATERING FILTRATION (DW)
- TC-1 STABILIZED CONSTRUCTION ENTRANCE
- TC-2 CONSTRUCTION ROAD STABILIZATION
- TC-3 ENTRANCE / EXIT TIRE WASH

POST-CONSTRCUTION SITE DESIGN BMPs

- 4.3.1 MAINTAIN NATURAL DRAINAGE PATHWAYS AND HYDROLOGIC FEATURES
- 4.3.2 CONSERVE NATURAL AREAS, SOILS, AND VEGITATION
- 4.3.3 MINIMIZE IMPERVIOUS AREA
- 4.3.4 MINIMIZE SOIL COMPACTION
- 4.3.5 IMPERVIOUS AREA DISPERSION
- 4.3.6 RUNOFF COLLECTION
- 4.3.7 LANDSCAPING WITH NATIVE OR DROUGHT TOLERANT SPECIES
- 4.3.8 HARVESTING AND USING PRECIPITATION

POST CONSTRUCTION SOURCE CONTROL BMPs

- 4.2.1 PREVENTION OF ILLICIT DISCHARGES INTO THE MS4
- 4.2.2 STORM DRAIN STENCILING AND POSTING OF SIGNAGE
- 4.2.3 PROTECTED OUTDOOR MATERIALS STORAGE AREAS
- 4.2.4 PROTECT MATERIALS STORED IN OUTDOOR WORK AREAS
- 4.2.5 PROTECT TRASH STORAGE AREAS
- 4.2.6 ADDNL BMPs BASED ON POTENTIAL RUNOFF POLLUTANTS:
  - A ON-SITE STORM DRAIN INLETS
  - B INTERIOR FLOOR DRAINS & ELEVATOR SHAFT SUMPS
  - C INTERIOR PARKING GARAGES
  - D NEED FOR FUTURE INDOOR & STR. PEST CONTROL
  - E LANDSCAPE/OUTDOOR PESTICIDE USE
  - F POOLS, SPAS, PONDS, FOUNTAINS, & WATER FEATURES
  - G FOOD SERVICE
  - H TRASH OR REFUSE AREAS
  - I INDUSTRIAL PROCESSES
  - J OUTDOOR STORAGE OF EQUIP. OR MATERIALS
  - K VEHICLE AND EQUIPMENT CLEANING
  - L VEHICLE/EQUIPEMENT REPAIR AND MAINTENANCE
  - M FUEL DISPENSING AREAS
  - N LOADING DOCKS
  - O FIRE SPRINKLER TEST WATER
  - P MISCELLANEOUS DRAIN OR WASH WATER
  - Q PLAZAS, SIDEWALKS, DRIVEWAYS, AND PARKING LOTS

SHEET INDEX

Sheet No.	SHEET NAME
SP-1	SITE PLAN
A1	FLOOR PLAN
A2	ELECTRICAL PLAN
A3	ELEVATIONS - FRONT & BACK
A4	ELEVATIONS - RIGHT & LEFT
A5	ROOF PLAN / TRUSS LAYOUT
A6	SECTIONS
S1	FOUNDATION PLAN
S2	ROOF FRAMING
CS-1	MIN. CONSTRUCTION SPECIFICATIONS

GENERAL CODES

THIS PROJECT SHALL COMPLY WITH THE FOLLOWING BUILDING CODES AND ASSOCIATED COUNTY OF SAN DIEGO AMENDMENTS:

- -2019 CALIFORNIA RESIDENTIAL CODE
- -2019 CALIFORNIA BUILDING CODE
- -2019 CALIFORNIA GREEN BUILDING STANDARDS CODE
- -2019 CALIFORNIA ELECTRICAL CODE
- -2019 CALIFORNIA MECHANICAL CODE
- -2019 CALIFORNIA PLUMBING CODE
- -2019 CALIFORNIA FIRE CODE
- -2019 CALIFORNIA BUILDING ENERGY EFFICIENCY STANDARDS

DESIGN BASIS

CONVENTIONAL LIGHT FRAME CONSTRUCTION

ROOF LIVE LOAD: 20 PSF
ULTIMATE WIND SPEED: 110 MPH
EXPOSURE CATEGORY: C
SITE CLASS: D
RISK CATEGORY: II
S_{DS}: 1.25
SEISMIC DESIGN CATEGORY: D_2
ALLOW SOIL VERTICAL BEARING PRESSURE: 1500 PSF
ALLOW SOIL LATERAL BEARING PRESSURE: 100 PSF/FT

ENERGY EFFICIENCY SPECIAL FEATURES

SPECIFY AS INDICATED IN CF1R FORM (TITLE 24):

-
-
-

ENERGY EFFICIENCY HERS VERIFICATION

SPECIFY AS INDICATED IN CF1R FORM (TITLE 24):

- DUCT SEALING (Y or N)
- REFRIGERANT CHARGE (Y or N)
- COOLING SYSTEM AIRFLOW (Y or N)
- COOLING SYSTEM UNIT FAN EFFICACY (Y or N)
- COOLING SYSTEM SEER AND/OR EER ABOVE MIN. (Y or N)
- WHOLE-BUILDING VENTILATION AIRFLOW (Y or N)
- BUILDING ENVELOPE AIR LEAKAGE (Y or N)
- QUALITY INSULATION INSTALLATION (Y or N)
- OTHER (SPECIFY BELOW)

PROPERLY COMPLETED AND SIGNED CERTIFICATES OF INSTALLATION (CF2R FORMS) SHALL BE PROVIDED TO THE INSPECTOR IN THE FIELD. FOR PROJECTS REQUIRING HERS VERIFICATION, THE CF2R FORMS SHALL BE REGISTERED WITH A CALIFORNIA-APPROVED HERS PROVIDER DATA REGISTRY." CF2R FORMS ARE AVAILABLE AT HTTP://WWW.SDCOUNTY.CA.GOV/PDS/BLDG/ENERGY-STDS.HTML. (CBEES 10-103)

PROPERLY COMPLETED CERTIFICATES OF VERIFICATION (CF3R FORMS) SHALL BE PROVIDED TO THE INSPECTOR IN THE FIELD FOR ITEMS REQUIRING HERS VERIFICATION. CF3R FORMS SHALL BE REGISTERED WITH A CALIFORNIA-APPROVED HERS PROVIDER DATA REGISTRY." CF3R FORMS ARE AVAILABLE AT HTTP://WWW.SDCOUNTY.CA.GOV/PDS/BLDG/ENERGY-STDS.HTML. (CBEES 10-103)

VICINITY MAP

OWNER INFORMATION

NAME:

ADDRESS:

PHONE:

EMAIL:

CONTACT INFORMATION

NAME:

ADDRESS:

PHONE:

EMAIL:

PARCEL INFORMATION

APN:

SITE ADDRESS:

PROPERTY CONNECTED TO THE ELECTRICAL GRID (Y or N)

PROPERTY SERVICED BY PROPANE (Y or N) IF YES, SHOW TANK ON PLOT PLAN

PROPERTY SERVICED BY NATURAL GAS (Y or N)

ENTIRE LOT IS FUEL MODIFIED (Y or N) IF NO, DIMENSION 100' FUEL MODIFICATION ZONE

PROJECT SCOPE

PROPOSED 1200 SF DETACHED ACCESSORY DWELLING UNIT

PERVIOUS AREA INFORMATION

PERVIOUS SURFACE AREA TABLE

SITE ID	PERVIOUS ITEM	DIMENSIONS	AREA (sf)	NOTES

PERVIOUS ELEMENT MANUFACTURER: _____
PERVIOUS ELEMENT SLOPE AND DIRECTION OF SLOPE: _____
MAINTENANCE PROGRAM: _____
PERVIOUS ELEMENT CROSS SECTION LOCATED IN SHEET: _____

CONSTRUCTED PERVIOUS SURFACES SHALL NOT BE SEALED

IMPERVIOUS AREA INFORMATION

IMPERVIOUS SURFACE AREA TABLE

SITE ID	IMPERVIOUS ITEM	DIMENSIONS	NEW OR REPLACED AREA (sf)	EXISTING AREA (sf)
1	ADU + OVERHANGS	43'-0" x 34'-0"	1462 SF	
2	SFD			
3	DRIVEWAY			
4				

LAND DISTURBANCE: _____SF

SHEET TITLE

SITE PLAN

SHEET NUMBER

SP-1

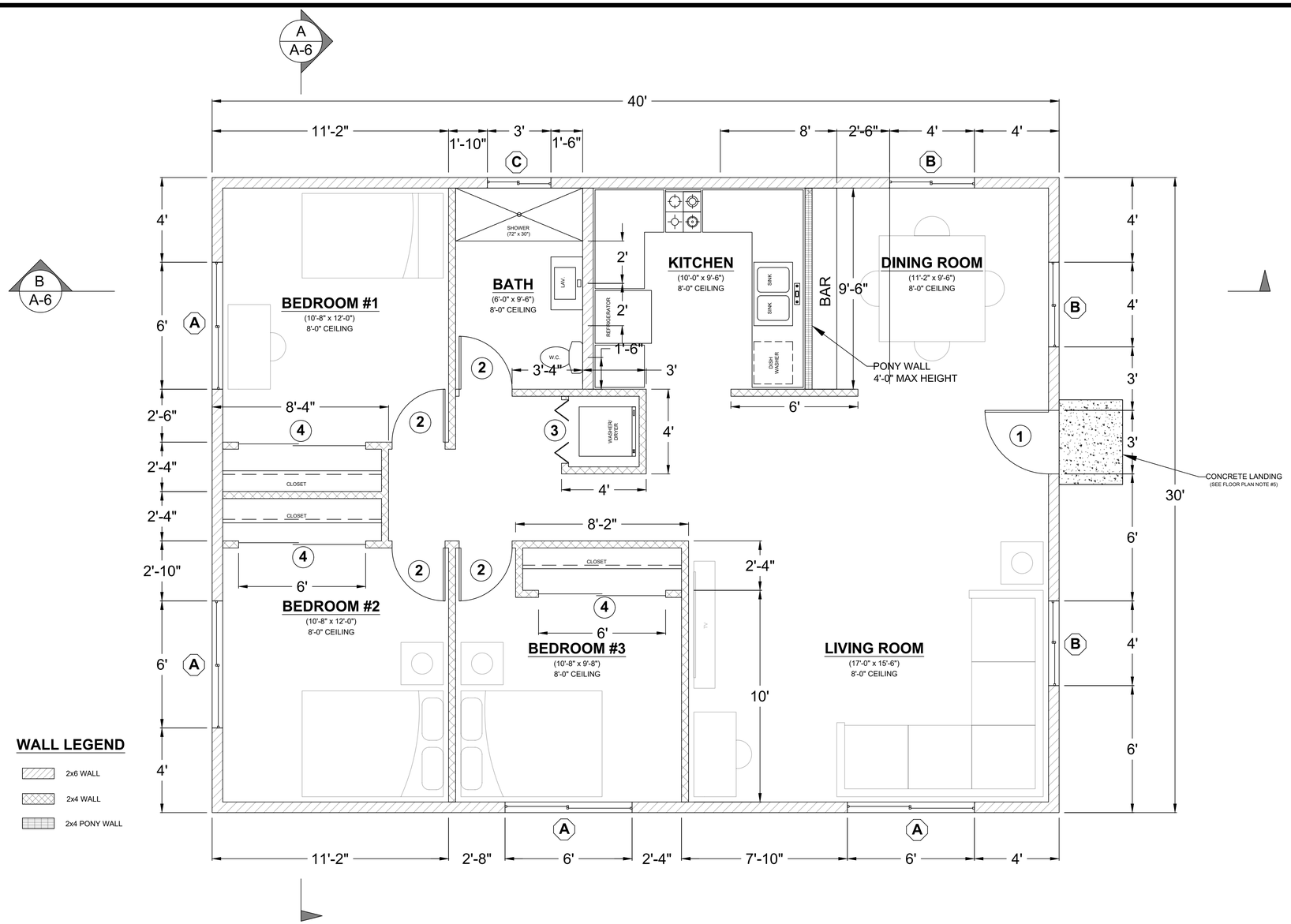

WALL LEGEND

- 2x6 WALL
- 2x4 WALL
- 2x4 PONY WALL

WINDOW SCHEDULE

MARK	DIMENSION	TYPE	TEMPERED	NOTES
A	6'-0" x 4'-0"	SLIDING		
B	4'-0" x 4'-0"	SLIDING		
C	3'-0" x 2'-0"	SLIDING	Y	

EXTERIOR WINDOWS, EXTERIOR GLAZED DOORS, GLAZED OPENINGS WITHIN EXTERIOR DOORS, GLAZED OPENINGS WITHIN EXTERIOR GARAGE DOORS, AND EXTERIOR STRUCTURAL GLASS VENEER SHALL COMPLY WITH ONE OF THE FOLLOWING: (SELECT ONE)

A. MULTI-PANE GLAZING WITH A MINIMUM OF ONE TEMPERED PANE MEETING THE REQUIREMENTS OF SECTION 2406 SAFETY GLAZING, AND WHERE ANY GLAZING FRAMES MADE OF VINYL MATERIALS SHALL HAVE WELDED CORNERS, METAL REINFORCEMENT IN INTERLOCK AREA, AND BE CERTIFIED TO AAMA/WDMA/CSA 101/I.S.2/A40
B. MINIMUM 20-MIN FIRE-RESISTANCE-RATED.
C. MEET PERFORMANCE REQUIREMENTS OF SFM STANDARD 12-7A-2

DOOR SCHEDULE

MARK	DIMENSION	TYPE	TEMPERED	NOTES
1	3'-0" x 6'-8"	SWINGING		1-3/8" SOLID CORE
2	2'-8" x 6'-8"	SWINGING		
3		BI-FOLD		LAUNDRY ROOM
4	6'-0" x 6'-8"	SLIDING		6FT CLOSET

EXTERIOR DOORS SHALL COMPLY WITH ONE OF THE FOLLOWING: (SELECT ONE)

A. EXTERIOR SURFACE OR CLADDING OF NON-COMBUSTIBLE OR IGNITION-RESISTANT MATERIAL
B. SOLID CORE WOOD COMPLYING WITH THE FOLLOWING:
- STILES AND RAILS MINIMUM 1-3/8 INCHES THICK
- RAISED PANELS MINIMUM 1-1/4 INCHES THICK
EXCEPTION: EXTERIOR PERIMETER OF RAISED PANEL MAY TAPER TO A TONGUE MINIMUM 3/8 INCHES THICK
C. MINIMUM 20-MIN FIRE RATED WHEN TESTED PER NFPA 252
D. MEET PERFORMANCE REQUIREMENTS OF SFM STANDARD 12-7A-1

FLOOR PLAN
3/8" = 1'-0"

FLOOR PLAN NOTES

1. EXTERIOR WALLS WITHIN 3 FEET OF PROPERTY LINE (SPRINKLERS) OR 5 FEET OF PROPERTY LINE (WITHOUT SPRINKLERS) REQUIRE 1-HOUR FIRE RATING FOR EXPOSURE TO BOTH SIDES
2. PROJECTIONS:
   - PROHIBITED WITHIN 2 FEET OF PROPERTY LINE
   - 1-HOUR FIRE RATING ON THE UNDERSIDE WITHIN 3FT OF PROPERTY LINE (SPRINKLERS)
   - 1-HOUR FIRE RATING ON THE UNDERSIDE WITHIN 5FT OF PROPERTY LINE (WITHOUT SPRINKLERS)
3. OPENINGS:
   - PROHIBITED WITHIN 3FT OF PROPERTY LINE
   - MAXIMUM 25% OF WALL AREA WITHIN 5 FEET OF PROPERTY LINE (WITHOUT SPRINKLERS)
4. PENETRATIONS:
   - 1-HOUR FIRE-RATED PENETRATIONS OF WALLS WITHIN 3FT OF PROPERTY LINE (SPRINKLERS)
   - 1-HOUR FIRE-RATED PENETRATIONS OF WALLS WITHIN 5FT OF PROPERTY LINE (WITHOUT SPRINKLERS)
5. CONCRETE LANDING WITH MIN 36" DEPTH AND A MAXIMUM OF 1-1/2" LOWER THAN TOP OF DOOR THRESHOLD

OPTIONAL ROLL-IN SHOWER PLAN NOTES

1. SHOWER COMPARTMENT SEAT
   - MUST BE FOLDING TYPE, NOT TO EXCEED MORE THAN 6 INCHES FROM MOUNTING WALL WHEN FOLDED
   - LOCATED WITHIN 27 INCHES OF SHOWER CONTROLS
   - MOUNTED MINIMUM 17 INCHES AND MAXIMUM 19 INCHES ABOVE BATHROOM FINISHED FLOOR.
   - SEAT INSTALLED ON SIDE WALL ADJACENT TO CONTROLS AND EXTENDING FROM BACK WALL TO POINT WITHIN 3 INCHES OF SHOWER COMPARTMENT ENTRY
   - STRUCTURAL ADEQUACY OF MOUNTING HARDWARE AND FASTENERS TO ACCOMMODATE 250 POUND POINT LOAD APPLIED AT ANY POINT ON THE GRAB BAR, FASTENER, MOUNTING DEVICE, OR SUPPORTING STRUCTURE
2. SHOWER GRAB BARS
   - MOUNTED MINIMUM 33 INCHES AND MAXIMUM 36 INCHES ABOVE SHOWER FLOOR
   - NOT EXTENDING OVER SHOWER SEAT
   - IF CROSS SECTION IS CIRCULAR, MINIMUM 1-1/4" AND MAXIMUM 2" OUTSIDE DIAMETER
   - IF CROSS SECTION IS NON-CIRCULAR, MINIMUM 4" AND MAXIMUM 4.8" PERIMETER AND MAXIMUM 2-1/4" CROSS SECTION DIMENSION
   - GRAB BARS MOUNTED ADJACENT TO A WALL, 1-1/2" ABSOLUTE SPACE BETWEEN WALL AND GRAB BAR
   - MINIMUM 1-1/2" SPACE BETWEEN GRAB BAR AND PROJECTING OBJECTS BELOW AND AT ENDS
   - MINIMUM 12 INCH SPACE BETWEEN GRAB BAR AND PROJECTING OBJECTS ABOVE
   - SURFACE MATERIAL OF ANY WALLS OR OBJECTS ADJACENT TO GRAB BARS MUST BE FREE OF SHARP OR ABRASIVE ELEMENTS AND HAVE ROUNDED EDGES.
   - STRUCTURAL ADEQUACY OF MOUNTING HARDWARE AND FASTENERS TO ACCOMMODATE 250 POUND POINT LOAD APPLIED AT ANY POINT ON THE GRAB BAR, FASTENER, MOUNTING DEVICE, OR SUPPORTING STRUCTURE
   - WALL REINFORCEMENT TO BE PROVIDED AT LOCATION OF GRAB BARS (E.G. BLOCKING)
3. OPERABLE PARTS OF SHOWER CONTROLS AND FAUCETS:
   - INSTALLED ON BACK WALL OF SHOWER COMPARTMENT ADJACENT TO SEAT WALL
   - LOCATED MINIMUM 19 INCHES AND MAXIMUM 27 INCHES FROM SEAT WALL
   - LOCATED ABOVE GRAB BAR BUT NO HIGHER THAN 48 INCHES ABOVE SHOWER FLOOR
   - CENTERLINE AT MINIMUM 39 INCHES AND MAXIMUM 41 INCHES ABOVE SHOWER FLOOR
   - SINGLE-LEVER DESIGN
   - OPERABLE WITH MAXIMUM 5 POUNDS OF FORCE
   - OPERABLE WITH ONE HAND AND WITHOUT TIGHT GRASPING, PINCHING, OR TWISTING OF WRIST
4. SPRAYER UNIT AND ASSOCIATED OPERABLE PARTS SHALL BE PROVIDED PER THE FOLLOWING:
   - OPERABLE PARTS, INCLUDING HANDLE, TO BE INSTALLED ON BACK WALL OF SHOWER COMPARTMENT MINIMUM 19 INCHES AND MAXIMUM 27 INCHES FROM SEAT WALL
   - OPERABLE PARTS LOCATED ABOVE GRAB BAR BUT NO HIGHER THAN 48 INCHES ABOVE SHOWER FLOOR, MEASURED TO TOP OF MOUNTING BRACKET
   - MINIMUM 59 INCH LONG HOSE
   - CAPABLE FOR USE AS FIXED SHOWER HEAD AND HAND HELD SHOWER
   - ON/OFF CONTROL WITH NON-POSITIVE SHUT OFF
   - ADJUSTABLE -HEIGHT SHOWER HEADS ON VERTICAL BAR SHALL NOT OBSTRUCT USE OF BATHTUB GRAB BARS
5. WHERE SOAP DISHES ARE PROVIDED, MAXIMUM 40 INCHES ABOVE SHOWER FLOOR AND WITHIN REACH LIMITS FROM THE SHOWER SEAT
6. MAXIMUM 2.1% SLOPE IN ALL DIRECTIONS OF ROLL-IN SHOWER FLOORS
7. MAXIMUM ½" HIGH THRESHOLDS WITH MAXIMUM 50% BEVELED SLOPE AT ROLL-IN SHOWERS
8. WHERE DRAINS ARE PROVIDED AT ROLL-IN SHOWERS, MAXIMUM ½" GRATE OPENINGS FLUSH WITH SHOWER FLOOR SURFACE

By using these standard plans, the user agrees to release the County of San Diego from any and all claims, liabilities, suits, and demands on account of any injury, damage, or loss to persons or property, including injury or death, or economic losses, arising out of the use of these construction documents. The use of these plans does not eliminate or reduce the user's responsibility to verify any and all information.

County of San Diego, Planning & Development Services
1200 SF ACCESSORY DWELLING UNIT
BUILDING DIVISION

Sheet Number

A1

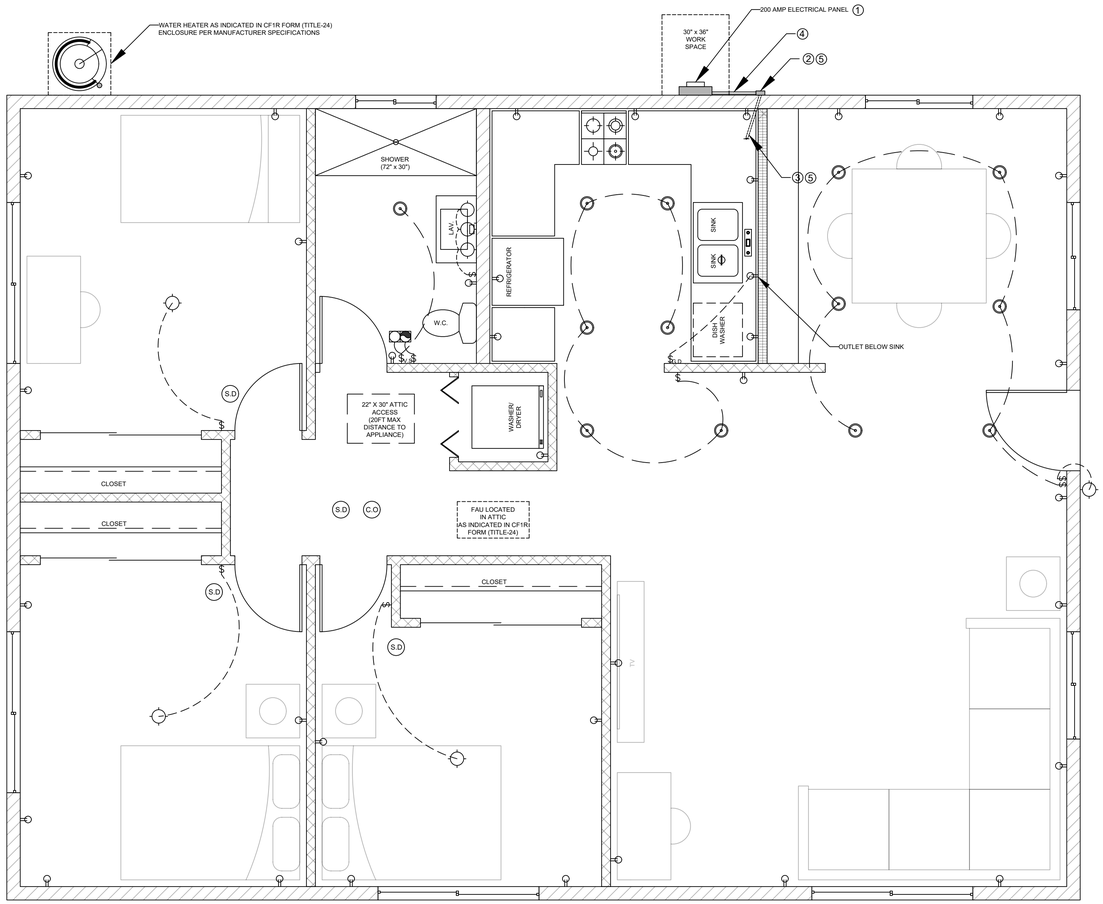

WALL LEGEND

- 2x6 WALL
- 2x4 WALL
- 2x4 PONY WALL

ELECTRICAL LEGEND

	DUPLEX OUTLET		HIGH EFFICACY RECESSED LIGHT
$	WALL SWITCH		GARBAGE DISPOSAL
$G.D	GARBAGE DISPOSAL SWITCH		
$V.S	VACANCY SENSOR		
	4" DIA DRYER VENT		
S.D	SMOKE DETECTOR		FAN & LIGHT COMBO
C.O	CARBON MONOXIDE ALARM		
	FAN AND LIGHT COMBINATION		
	HIGH EFFICACY LIGHT FIXTURE		

ELECTRICAL PLAN

3/8" = 1'-0"

UTILITY PLAN NOTES

1. LOCAL EXHAUST FANS TO EXTERIOR TO PROVIDE MINIMUM 50 CFM INTERMITTENT OR 20 CFM CONTINUOUS VENTILATION.
2. SMOKE DETECTORS TO BE INTERCONNECTED PER CRC R314.4 AND HARD-WIRED WITH BATTERY BACK-UP PER CRC R314.6
3. CARBON MONOXIDE ALARMS TO BE INTERCONNECTED PER CRC R315.7 AND HARD-WIRED WITH BATTERY BACK-UP PER CRC R315.5
4. 4" Ø DRYER VENT WITH MAXIMUM 14 FOOT COMBINED HORIZONTAL AND VERTICAL LENGTH WITH TWO 90 DEGREE ELBOWS.
5. A MECHANICAL EXHAUST VENTILATION SYSTEM, SUPPLY VENTILATION SYSTEM, OR COMBINATION THEREOF SHALL BE INSTALLED FOR EACH DWELLING UNIT TO PROVIDE WHOLE-BUILDING VENTILATION WITH OUTDOOR AIR IN COMPLIANCE WITH ASHRAE STANDARD 62.2 AS ADOPTED BY THE CALIFORNIA ENERGY COMMISSION.
6. AN INTERMITTENTLY OR CONTINUOUSLY OPERATING LOCAL MECHANICAL EXHAUST VENTILATION SYSTEM SHALL BE INSTALLED IN EACH BATHROOM WITH A BATHTUB, SHOWER, OR SIMILAR MOISTURE SOURCE AND IN EACH KITCHEN IN COMPLIANCE WITH ASHRAE STANDARD 62.2 AS ADOPTED BY THE CALIFORNIA ENERGY COMMISSION. INTERMITTENT LOCAL EXHAUST VENTILATION AIRFLOW RATES SHALL BE 50 CFM IN BATHROOMS AND 100 CFM IN KITCHENS. CONTINUOUS LOCAL EXHAUST VENTILATION AIRFLOW RATES SHALL BE 20 CFM IN BATHROOMS AND 5 AIR CHANGES PER HOUR IN KITCHENS BASED ON KITCHEN VOLUME.
7. WATER HEATER OR FURNACE SHALL BE A DIRECT-VENT APPLIANCE
8. LISTED GASKETED SELF CLOSING DOOR REQUIRED FOR GAS FAU

LIGHTING PLAN NOTES

1. ALL LUMINAIRES SHALL BE HIGH-EFFICACY IN ACCORDANCE WITH CBEES TABLE 150.0-A
2. ALL LED LUMINAIRES AND LAMPS SHALL BE MARKED "JA8-2016" AND LISTED IN THE CALIFORNIA ENERGY COMMISSION DATABASE AT HTTPS://CACERTAPPLIANCES. ENERGY.CA.GOV/PAGES/ APPLIANCESEARCH.ASPX
3. ALL RECESSED DOWNLIGHT AND ENCLOSED LUMINAIRES SHALL BE MARKED "JA8-2016-E" AND LISTED IN THE CALIFORNIA ENERGY COMMISSION DATABSE AT HTTPS://CACERTAPPLIANCES.ENERGY.CA.GOV/PAGES/ APPLIANCESEARCH.ASPX
4. RECESSED DOWNLIGHT LUMINAIRES IN CEILINGS SHALL NOT BE SCREW-BASED
5. BATHROOMS, GARAGES, LAUNDRY ROOMS, AND UTILITY ROOMS: AT LEAST ONE LUMINAIRE IN EACH SPACE SHALL BE CONTROLLED BY A VACANCY SENSOR
6. ALL LUMINAIRES REQUIRING "JA8-2016" OR "JA8-2016-E" MARKING SHALL BE CONTROLLED BY A DIMMER OR VACANCY SENSOR
   EXCEPTION: CLOSETS LESS THAN 70 S.F. & HALLWAYS
7. OUTDOOR LIGHTING PERMANENTLY MOUNTED TO BUILDINGS SHALL BE CONTROLLED BY ONE OF THE FOLLOWING:
   - PHOTOCONTROL AND MOTION SENSOR
   - PHOTOCONTROL AND AUTOMATIC TIME-SWITCH CONTROL
   - ASTRONOMICAL TIME CLOCK
   - ENERGY MANAGEMENT CONTROL SYSTEM PER CBEES 150.0(K)3AIIIC

SOLAR READY KEY NOTES

1. THE MAIN ELECTRICAL SERVICE PANEL SHALL NOT BE OF A TYPE WITH A CENTER-FED MAIN CIRCUIT BREAKER AND SHALL INCLUDE RESERVED SPACE ALLOWING FOR INSTALLATION OF DOUBLE-POLE CIRCUIT BREAKERS FOR A FUTURE SOLAR PHOTOVOLTAIC SYSTEM. SUCH RESERVED SPACE SHALL BE POSITIONED AT THE OPPOSITE (LOAD) END FROM THE INPUT FEEDER OR MAIN CIRCUIT BREAKER LOCATION. THE RESERVED SPACE SHALL BE PERMANENTLY AND VISIBLY MARKED AS "FOR FUTURE SOLAR PHOTOVOLTAIC"
2. APPROVED MINIMUM 4-INCH SQUARE ELECTRICAL JUNCTION BOX LOCATED WITHIN 72 INCHES HORIZONTALLY AND 12 INCHES VERTICAL OF MAIN ELECTRICAL SERVICE PANEL
3. MINIMUM 1 INCH DIAMETER LISTED ELECTRICAL METALLIC RACEWAY ORIGINATING AT READILY ACCESSIBLE ATTIC LOCATION WITH PROXIMITY TO SOLAR ZONE AREA AND TERMINATING AT THE REQUIRED ELECTRICAL JUNCTION BOX
4. MINIMUM 1 INCH DIAMETER LISTED ELECTRICAL METALLIC RACEWAY ORIGINATING AT THE REQUIRED ELECTRICAL JUNCTION BOX AND TERMINATING AT THE MAIN ELECTRICAL SERVICE PANEL
5. ELECTRICAL JUNCTION BOX AND SEGMENT OF METALLIC RACEWAY IN THE ATTIC SHALL BE PERMANENTLY AND VISIBLY MARKED AS "FOR FUTURE SOLAR PHOTOVOLTAIC"

By using these standard plans, the user agrees to release the County of San Diego from any and all claims, liabilities, suits, and demands on account of any injury, damage, or loss to persons or property, including injury or death, or economic losses, arising out of the use of these construction documents. The use of these plans does not eliminate or reduce the user's responsibility to verify any and all information.

County of San Diego, Planning & Development Services
1200 SF ACCESSORY DWELLING UNIT
BUILDING DIVISION

Sheet Number

A2

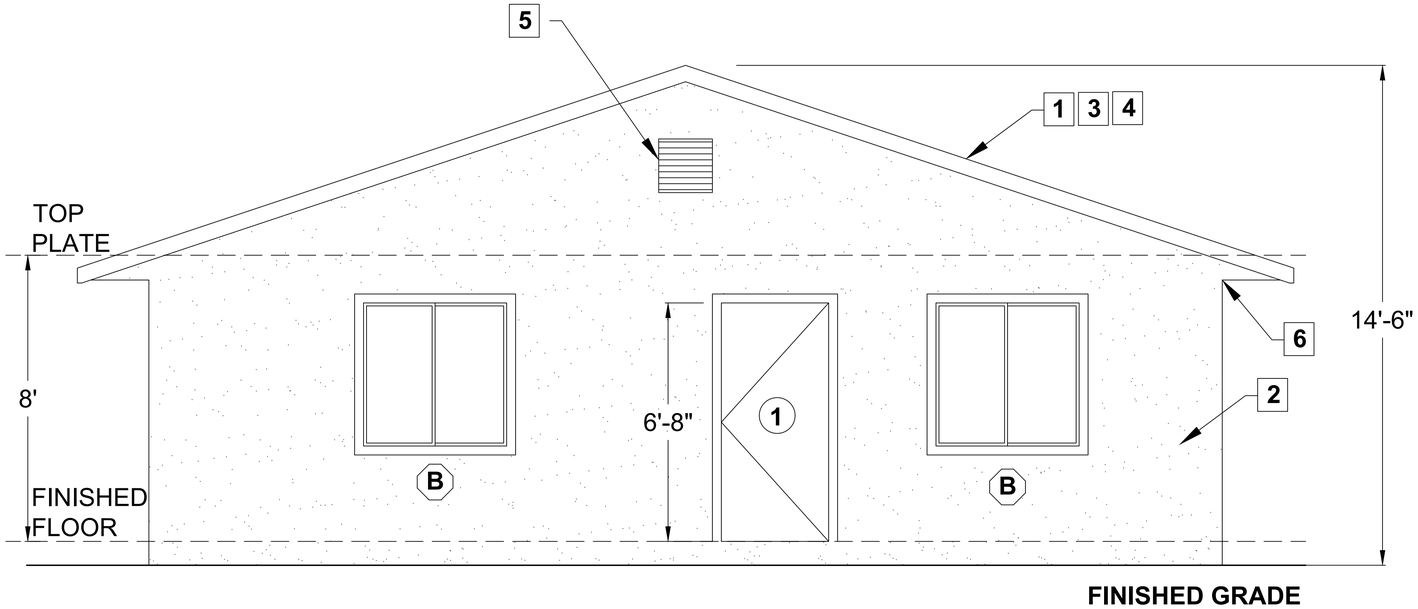

FRONT

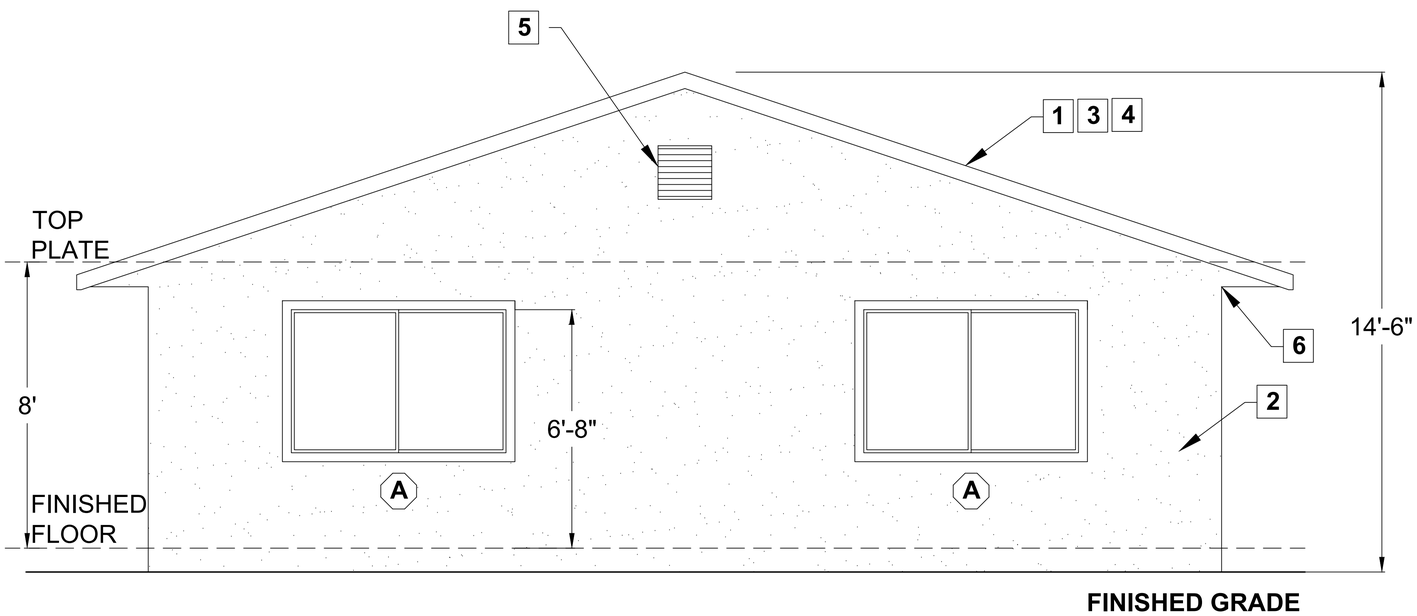

BACK

ELEVATIONS
1/2" = 1'-0"

ELEVATION KEY NOTES

1. ROOF: CLASS 'A' FIRE RATING -
   ROOF MATERIAL: _____
   UNDERLAYMENT: _____
   LISTING REPORT #: _____
2. EXTERIOR WALL FINISH: _____ (SEE NOTE 7 BELOW)
3. ROOF PITCH: 4:12
4. RADIANT BARRIER IS REQUIRED
5. GABLE VENT (SEE NOTE 5 & 6 BELOW)
   MANUFACTURER:_____
   MODEL: _____
   NFVA: _____ (MIN 115 in^2)
6. EAVE VENT (SEE NOTE 5 & 6 BELOW)
   MANUFACTURER:_____
   MODEL: _____
   NFVA: _____ (MIN 36 in^2)

WILDFIRE ZONE PLAN NOTES

1. IN ROOF COVERINGS WHERE THE PROFILE CREATES SPACE BETWEEN THE ROOF COVERING AND COMBUSTIBLE ROOF DECKING, SPECIFY ONE OF THE FOLLOWING MEANS OF PROTECTING SPACES AT EAVES ENDS.
   a. FIRE-STOPPING WITH APPROVED MATERIALS
   b. ONE LAYER OF 72 POUND (32.4 KG) MINERAL-SURFACED NON-PERFORATED CAP SHEET COMPLYING WITH ASTM D 3909 INSTALLED OVER THE COMBUSTIBLE DECKING
   c. OTHERWISE CONSTRUCTED TO PREVENT INTRUSION OF FLAMES AND EMBERS
2. EXPOSED VALLEY FLASHINGS SHALL BE CONSTRUCTED WITH NOT LESS THAN 0.019-INCH (NO. 26 GALVANIZED SHEET GAGE) CORROSION-RESISTANT METAL INSTALLED OVER A MINIMUM 36-INCH-WIDE UNDERLAYMENT CONSISTING OF ONE LAYER OF NO. 72 ASTM CAP SHEET RUNNING THE FULL LENGTH OF THE VALLEY.
3. ANY ROOF GUTTERS SHALL BE PROVIDED WITH MEANS TO PREVENT ACCUMULATION OF LEAVES AND DEBRIS.
4. SKYLIGHTS SHALL BE TEMPERED GLASS.
5. ALL VENTS (ROOF, FOUNDATION, COMBUSTION-AIR, ETC) SHALL RESIST THE INTRUSION OF FLAMES AND EMBERS
6. VENTILATION OPENINGS FOR ENCLOSED ATTICS, EAVE SOFFIT SPACES, ENCLOSED RAFTER SPACES FORMED WHERE CEILINGS ARE APPLIED DIRECTLY TO THE UNDERSIDE OF ROOF RAFTERS, UNDERFLOOR VENTILATION OPENINGS, AND VENT OPENINGS IN EXTERIOR WALLS AND EXTERIOR DOORS SHALL BE LISTED TO ASTM E 2886 AND COMPLY WITH ALL OF THE FOLLOWING:
   a. THERE SHALL BE NO FLAMING IGNITION OF THE COTTON MATERIAL DURING THE EMBER INTRUSION TEST
   b. THERE SHALL BE NO FLAMING IGNITION DURING THE INTEGRITY TEST PORTION OF THE FLAME INTRUSION TEST
   c. THE MAXIMUM TEMPERATURE OF THE UNEXPOSED SIDE OF THE VENT SHALL NOT EXCEED 662 DEGREES FAHRENHEIT (350 DEGREES CELSIUS)
7. EXTERIOR WALL FINISH SHALL COMPLY WITH ONE OF THE FOLLOWING:
   a. NON-COMBUSTIBLE MATERIAL (STUCCO, CEMENT FIBER BOARD, ETC)
      - STUCCO AND CEMENT PLASTER USED AS AN EXTERIOR WALL COVERING SHALL BE 7/8-INCH THICK
      - NONCOMBUSTIBLE OR FIRE-RETARDANT-TREATED WOOD SHAKE USED AS AN EXTERIOR WALL COVERING SHALL HAVE AN UNDERLAYMENT OF MINIMUM 1/2-INCH FIRE-RATED GYPSUM SHEATHING THAT IS TIGHTLY BUTTED, OR TAPED AND MUDDED, OR AN UNDERLAYMENT OF OTHER IGNITION-RESISTANT MATERIAL APPROVED BY THE BUILDING OFFICIAL.
   b. IGNITION-RESISTANT MATERIAL
8. PATIO COVER, CARPORT AND TRELLIS CONSTRUCTION WITH ALL EXPOSED ELEMENTS SHALL COMPLY WITH ANY OF THE FOLLOWING:
   - NON-COMBUSTIBLE MATERIAL
   - 1-HOUR FIRE-RESISTANT-RATED MATERIAL
   - APPROVED EXTERIOR FIRE-RETARDANT TREATED WOOD
   - MODIFIED HEAVY TIMBER (MIN 2X TONGUE-AND-GROOVE SHEATHING, 4X6 RAFTERS/BEAMS, 6X6 POSTS)
9. DECK, BALCONY, AND EXTERIOR STAIR CONSTRUCTION, WITH ALL EXPOSED ELEMENTS SHALL COMPLY WITH THE FOLLOWING:
   a. FRAMING
      - NON-COMBUSTIBLE MATERIAL
      - 1-HOUR FIRE-RESISTANT-RATED MATERIAL
      - APPROVED EXTERIOR FIRE-RETARDANT TREATED WOOD
      - MODIFIED HEAVY TIMBER (MIN 4X8 JOISTS, 4X10 OR 6X8 BEAMS, 6X6 POSTS)
   b. DECKING AND TREAD MATERIAL (ANY OF THE FOLLOWING):
      - NON-COMBUSTIBLE MATERIAL
      - 1-HOUR FIRE-RESISTANT-RATED MATERIAL
      - APPROVED EXTERIOR FIRE-RETARDANT TREATED WOOD
      - APPROVED ALTERNATIVE DECKING MATERIAL MEETING TESTS REQUIREMENTS OF COUNTY BUILDING CODE 92.1.709A.1.4)
10. EXTERIOR GARAGE DOORS SHALL RESIST THE INTRUSION OF EMBERS INTO THE GARAGE BY LIMITING THE SIZE OF ANY GAPS AT THE BOTTOM, SIDES, AND TOP OF THE DOOR TO 1/8 INCH OR LESS USING ONE OF THE FOLLOWING METHODS
    a. WEATHER-STRIPPING PRODUCTS WITH TENSILE STRENGTH AND FLAMMABILITY RATING PER CBC 708A.4
    b. DOOR OVERLAPS ONTO JAMBS AND HEADERS
    c. GARAGE DOOR JAMBS AND HEADERS COVERED WITH METAL FLASHING
11. PAPER-FACED INSULATION PROHIBITED IN ATTICS OR OTHER VENTILATED SPACES.
12. FENCES OR ANY STRUCTURE WITHIN 5 FEET OF BUILDING SHALL BE CONSTRUCTED PER ONE OF THE FOLLOWING:
    a. NON-COMBUSTIBLE MATERIAL
    b. APPROVED EXTERIOR FIRE-RETARDANT TREATED WOOD
    c. MATERIAL MEETING SAME FIRE-RESISTIVE STANDARDS AS EXTERIOR WALLS OF BUILDINGS

By using these standard plans, the user agrees to release the County of San Diego from any and all claims, liabilities, suits, and demands on account of any injury, damage, or loss to persons or property, including injury or death, or economic losses, arising out of the use of these construction documents. The use of these plans does not eliminate or reduce the user's responsibility to verify any and all information.

County of San Diego, Planning & Development Services
1200 SF ACCESSORY DWELLING UNIT
BUILDING DIVISION

Sheet Number

A3

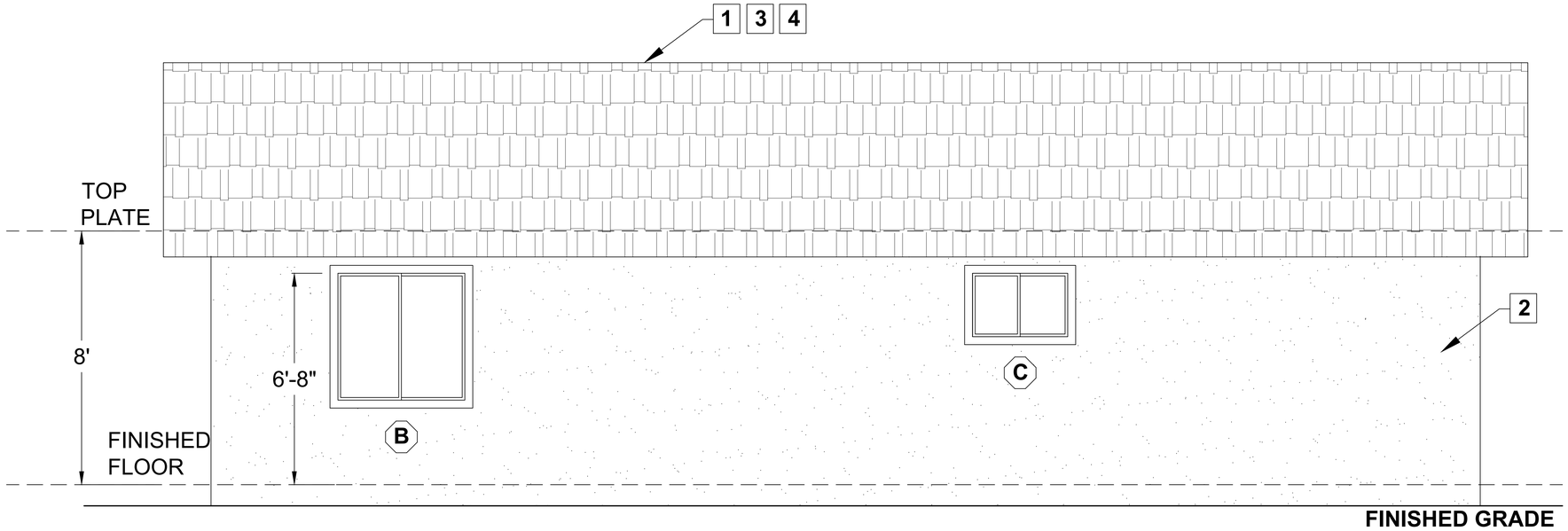

RIGHT

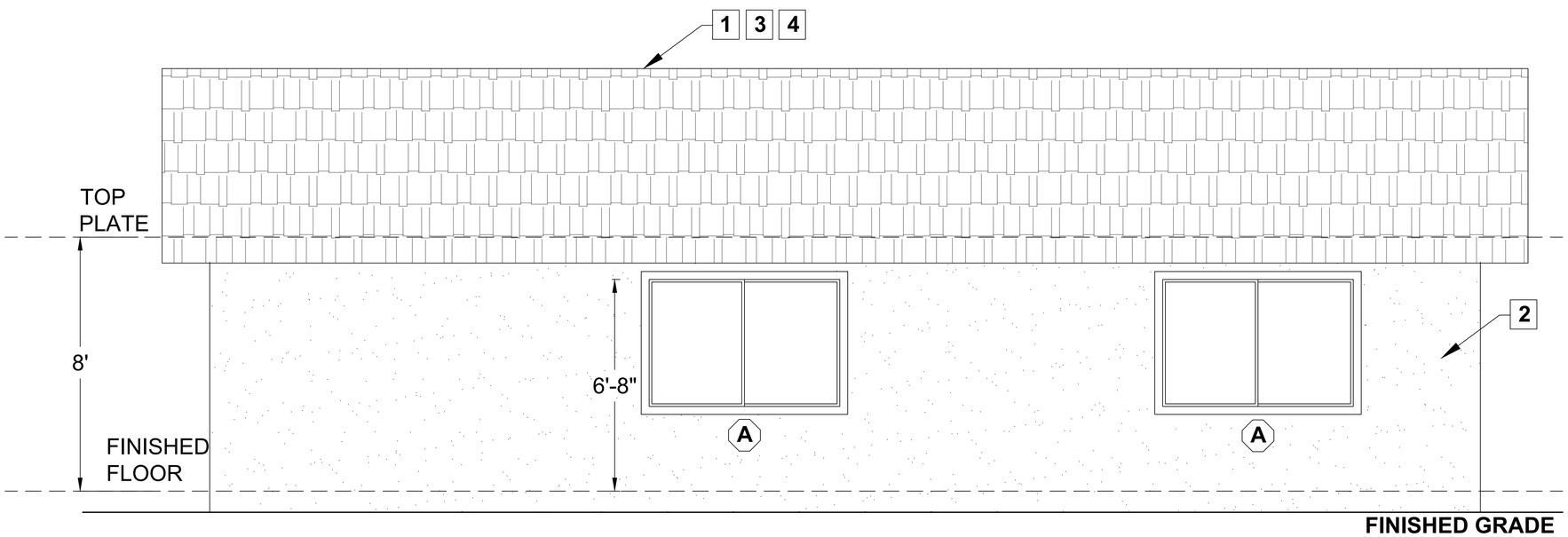

LEFT

ELEVATIONS
1/2" = 1'-0"

ELEVATION KEY NOTES

SEE SHEET A3 FOR KEY NOTES

WILDFIRE ZONE PLAN NOTES

1. IN ROOF COVERINGS WHERE THE PROFILE CREATES SPACE BETWEEN THE ROOF COVERING AND COMBUSTIBLE ROOF DECKING, SPECIFY ONE OF THE FOLLOWING MEANS OF PROTECTING SPACES AT EAVES ENDS.
   a. FIRE-STOPPING WITH APPROVED MATERIALS
   b. ONE LAYER OF 72 POUND (32.4 KG) MINERAL-SURFACED NON-PERFORATED CAP SHEET COMPLYING WITH ASTM D 3909 INSTALLED OVER THE COMBUSTIBLE DECKING
   c. OTHERWISE CONSTRUCTED TO PREVENT INTRUSION OF FLAMES AND EMBERS

2. EXPOSED VALLEY FLASHINGS SHALL BE CONSTRUCTED WITH NOT LESS THAN 0.019-INCH (NO. 26 GALVANIZED SHEET GAGE) CORROSION-RESISTANT METAL INSTALLED OVER A MINIMUM 36-INCH-WIDE UNDERLAYMENT CONSISTING OF ONE LAYER OF NO. 72 ASTM CAP SHEET RUNNING THE FULL LENGTH OF THE VALLEY.

3. ANY ROOF GUTTERS SHALL BE PROVIDED WITH MEANS TO PREVENT ACCUMULATION OF LEAVES AND DEBRIS.

4. SKYLIGHTS SHALL BE TEMPERED GLASS.

5. ALL VENTS (ROOF, FOUNDATION, COMBUSTION-AIR, ETC) SHALL RESIST THE INTRUSION OF FLAMES AND EMBERS

6. VENTILATION OPENINGS FOR ENCLOSED ATTICS, EAVE SOFFIT SPACES, ENCLOSED RAFTER SPACES FORMED WHERE CEILINGS ARE APPLIED DIRECTLY TO THE UNDERSIDE OF ROOF RAFTERS, UNDERFLOOR VENTILATION OPENINGS, AND VENT OPENINGS IN EXTERIOR WALLS AND EXTERIOR DOORS SHALL BE LISTED TO ASTM E 2886 AND COMPLY WITH ALL OF THE FOLLOWING:
   a. THERE SHALL BE NO FLAMING IGNITION OF THE COTTON MATERIAL DURING THE EMBER INTRUSION TEST
   b. THERE SHALL BE NO FLAMING IGNITION DURING THE INTEGRITY TEST PORTION OF THE FLAME INTRUSION TEST
   c. THE MAXIMUM TEMPERATURE OF THE UNEXPOSED SIDE OF THE VENT SHALL NOT EXCEED 662 DEGREES FAHRENHEIT (350 DEGREES CELSIUS)

7. EXTERIOR WALL FINISH SHALL COMPLY WITH ONE OF THE FOLLOWING:
   a. NON-COMBUSTIBLE MATERIAL (STUCCO, CEMENT FIBER BOARD, ETC)
      - STUCCO AND CEMENT PLASTER USED AS AN EXTERIOR WALL COVERING SHALL BE 7/8-INCH THICK
      - NONCOMBUSTIBLE OR FIRE-RETARDANT-TREATED WOOD SHAKE USED AS AN EXTERIOR WALL COVERING SHALL HAVE AN UNDERLAYMENT OF MINIMUM 1/2-INCH FIRE-RATED GYPSUM SHEATHING THAT IS TIGHTLY BUTTED, OR TAPED AND MUDDED, OR AN UNDERLAYMENT OF OTHER IGNITION-RESISTANT MATERIAL APPROVED BY THE BUILDING OFFICIAL.
   b. IGNITION-RESISTANT MATERIAL

8. PATIO COVER, CARPORT AND TRELLIS CONSTRUCTION WITH ALL EXPOSED ELEMENTS SHALL COMPLY WITH ANY OF THE FOLLOWING:
   - NON-COMBUSTIBLE MATERIAL
   - 1-HOUR FIRE-RESISTANT-RATED MATERIAL
   - APPROVED EXTERIOR FIRE-RETARDANT TREATED WOOD
   - MODIFIED HEAVY TIMBER (MIN 2X TONGUE-AND-GROOVE SHEATHING, 4X6 RAFTERS/BEAMS, 6X6 POSTS)

9. DECK, BALCONY, AND EXTERIOR STAIR CONSTRUCTION, WITH ALL EXPOSED ELEMENTS SHALL COMPLY WITH THE FOLLOWING:
   a. FRAMING
      - NON-COMBUSTIBLE MATERIAL
      - 1-HOUR FIRE-RESISTANT-RATED MATERIAL
      - APPROVED EXTERIOR FIRE-RETARDANT TREATED WOOD
      - MODIFIED HEAVY TIMBER (MIN 4X8 JOISTS, 4X10 OR 6X8 BEAMS, 6X6 POSTS)
   b. DECKING AND TREAD MATERIAL (ANY OF THE FOLLOWING):
      - NON-COMBUSTIBLE MATERIAL
      - 1-HOUR FIRE-RESISTANT-RATED MATERIAL
      - APPROVED EXTERIOR FIRE-RETARDANT TREATED WOOD
      - APPROVED ALTERNATIVE DECKING MATERIAL MEETING TESTS REQUIREMENTS OF COUNTY BUILDING CODE 92.1.709A.1.4)

10. EXTERIOR GARAGE DOORS SHALL RESIST THE INTRUSION OF EMBERS INTO THE GARAGE BY LIMITING THE SIZE OF ANY GAPS AT THE BOTTOM, SIDES, AND TOP OF THE DOOR TO 1/8 INCH OR LESS USING ONE OF THE FOLLOWING METHODS
    a. WEATHER-STRIPPING PRODUCTS WITH TENSILE STRENGTH AND FLAMMABILITY RATING PER CBC 708A.4
    b. DOOR OVERLAPS ONTO JAMBS AND HEADERS
    c. GARAGE DOOR JAMBS AND HEADERS COVERED WITH METAL FLASHING

11. PAPER-FACED INSULATION PROHIBITED IN ATTICS OR OTHER VENTILATED SPACES.

12. FENCES OR ANY STRUCTURE WITHIN 5 FEET OF BUILDING SHALL BE CONSTRUCTED PER ONE OF THE FOLLOWING:
    a. NON-COMBUSTIBLE MATERIAL
    b. APPROVED EXTERIOR FIRE-RETARDANT TREATED WOOD
    c. MATERIAL MEETING SAME FIRE-RESISTIVE STANDARDS AS EXTERIOR WALLS OF BUILDINGS

By using these standard plans, the user agrees to release the County of San Diego from any and all claims, liabilities, suits, and demands on account of any injury, damage, or loss to persons or property, including injury or death, or economic losses, arising out of the use of these construction documents. The use of these plans does not eliminate or reduce the user's responsibility to verify any and all information.

County of San Diego, Planning & Development Services
1200 SF ACCESSORY DWELLING UNIT
BUILDING DIVISION

Sheet Number

A4

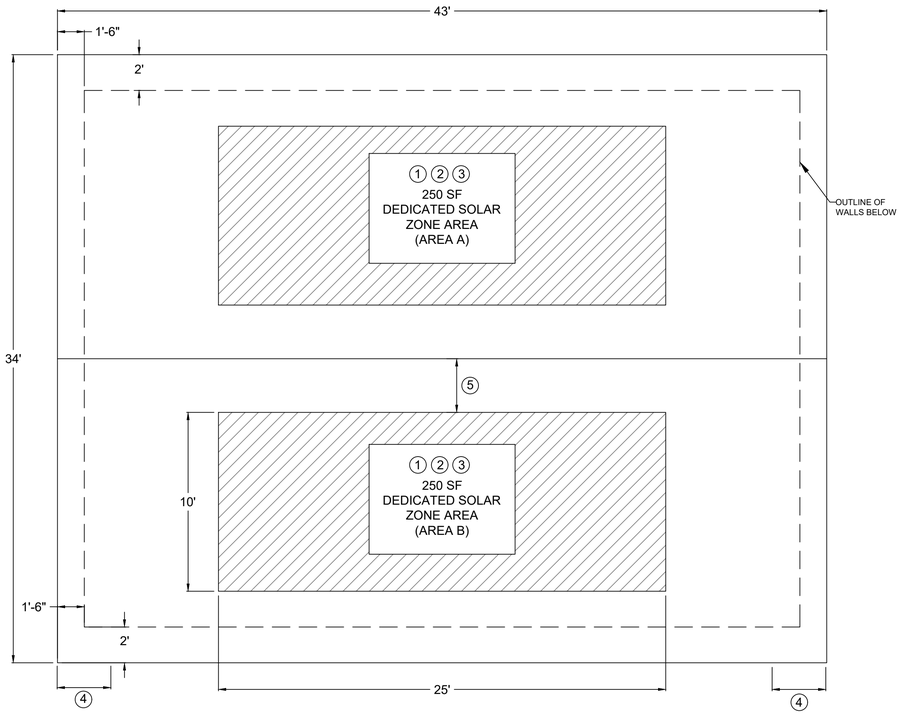

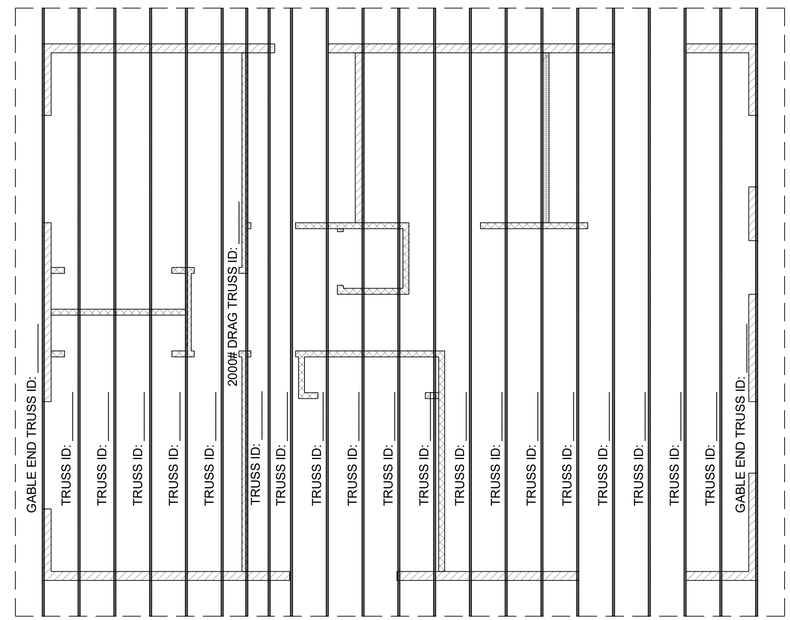

SOLAR READY KEY NOTES

1. MIN 250 S.F. SOLAR ZONE AREA
2. DEDICATED SOLAR ZONE AREA LOCATED BETWEEN 110 AND 270 DEGREES OF TRUE NORTH - USE AREA A OR B AS NEEDED.
3. NO OBSTRUCTIONS - INCLUDING VENTS, CHIMNEYS, SKYLIGHTS, ARCHITECTURAL FEATURES, ROOF-MOUNTED EQUIPMENT - LOCATED WITHIN SOLAR ZONE.
4. 3" MIN FIRE FIGHTER ACCESS
5. 1'-6" SMOKE VENTILATION SETBACK AT RIDGES

ATTIC VENTILATION REQUIRED

NET FREE CROSS VENTILATION AREA = $\frac{1}{300}$
VENT AREA REQ'D = 1200 ft^2 / 300 = 4 ft^2 x 144 = 576 in^2

GABLE END VENTS
NFVA = 115 in^2
QTY = 2 VENTS
VENT AREA PROVIDED = 2 x 115 in^2 = 230 in^2

EAVE VENTS
NFVA: 36 in^2
QTY = 10 VENTS
VENT AREA PROVIDED =10 x 36 in^2 = 360 in^2

TOTAL VENT AREA PROVIDED
(230 in^2) + (360 in^2) = 590 in^2 > 576 in^2

ROOF PLAN / TRUSS LAYOUT
1/4" = 1'-0"

By using these standard plans, the user agrees to release the County of San Diego from any and all claims, liabilities, suits, and demands on account of any injury, damage, or loss to persons or property, including injury or death, or economic losses, arising out of the use of these construction documents. The use of these plans does not eliminate or reduce the user's responsibility to verify any and all information.

County of San Diego, Planning & Development Services
1200 SF ACCESSORY DWELLING UNIT
BUILDING DIVISION

Sheet Number

A5

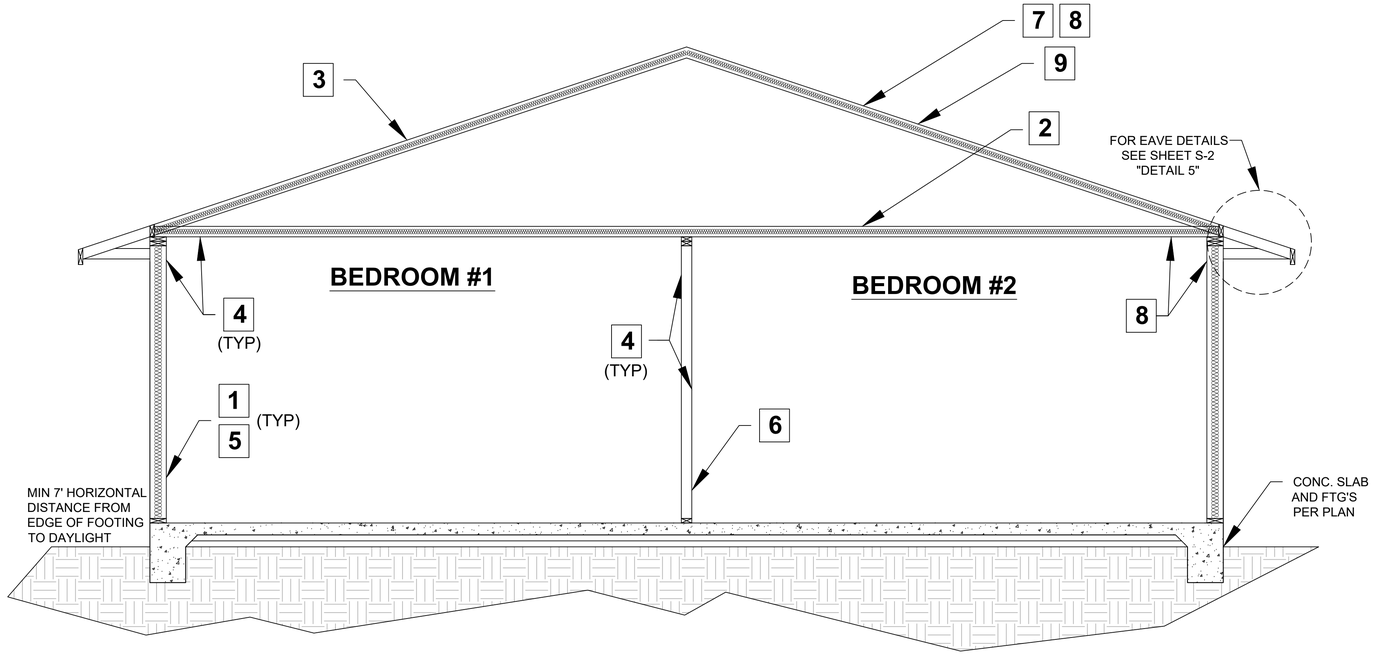

SECTION A-A

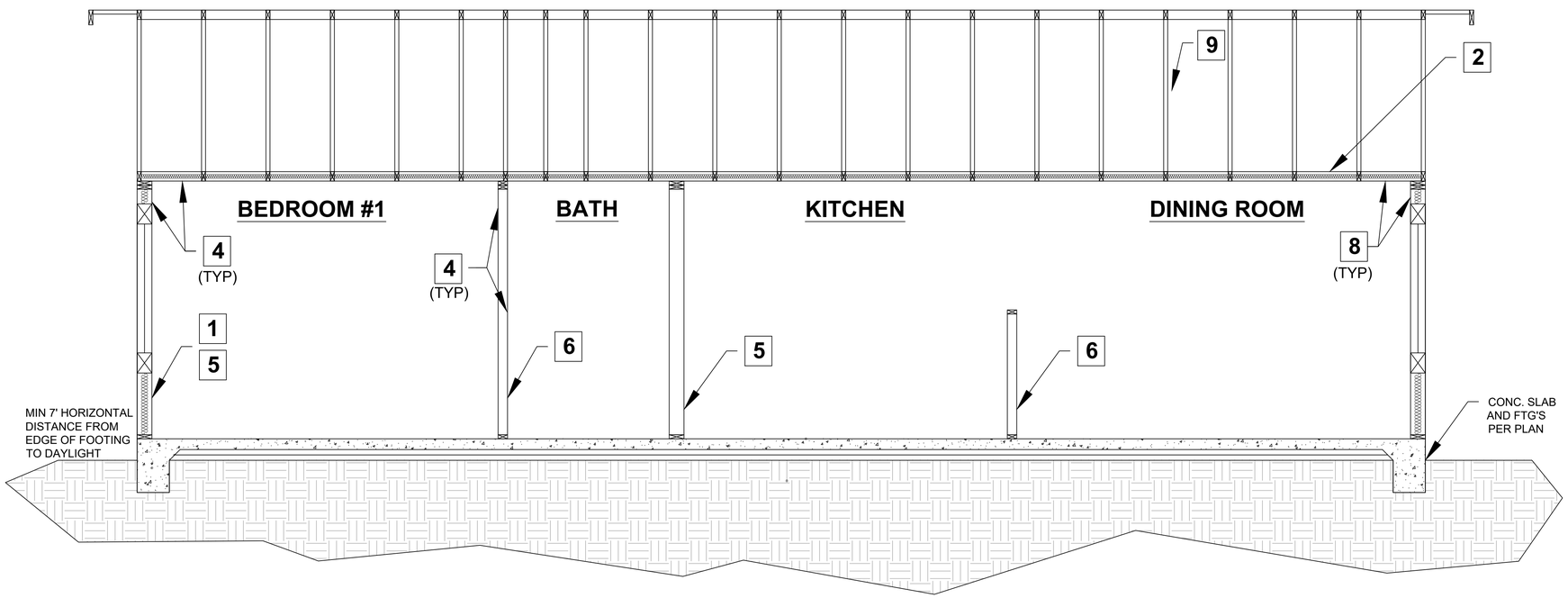

SECTION B-B

SECTIONS
1/2" = 1'-0"

SECTION KEY NOTES

1. WALL INSULATION: _____
2. CEILING INSULATION: _____
3. ROOF (TOP CHORD) INSULATION: _____
4. INTERIOR FINISH: $\frac{1}{2}$" GYPSUM BOARD
5. EXTERIOR WALL/PLUMBING WALL: 2X6 STUD WALL
6. INTERIOR WALL: 2X4 STUD WALL
7. RADIANT BARRIER IS REQUIRED
8. CLIMATE ZONE 14 PROJECT (Y or N) if yes, see below:

   A CLASS I OR II VAPOR RETARDER SHALL BE INSTALLED ON THE CONDITIONED SPACE SIDE OF ALL INSULATION IN ALL EXTERIOR WALLS AND VENTED ATTICS
9. MANUFACTURED TRUSSES

By using these standard plans, the user agrees to release the County of San Diego from any and all claims, liabilities, suits, and demands on account of any injury, damage, or loss to persons or property, including injury or death, or economic losses, arising out of the use of these construction documents. The use of these plans does not eliminate or reduce the user's responsibility to verify any and all information.

County of San Diego, Planning & Development Services
1200 SF ACCESSORY DWELLING UNIT
BUILDING DIVISION

Sheet Number

A6

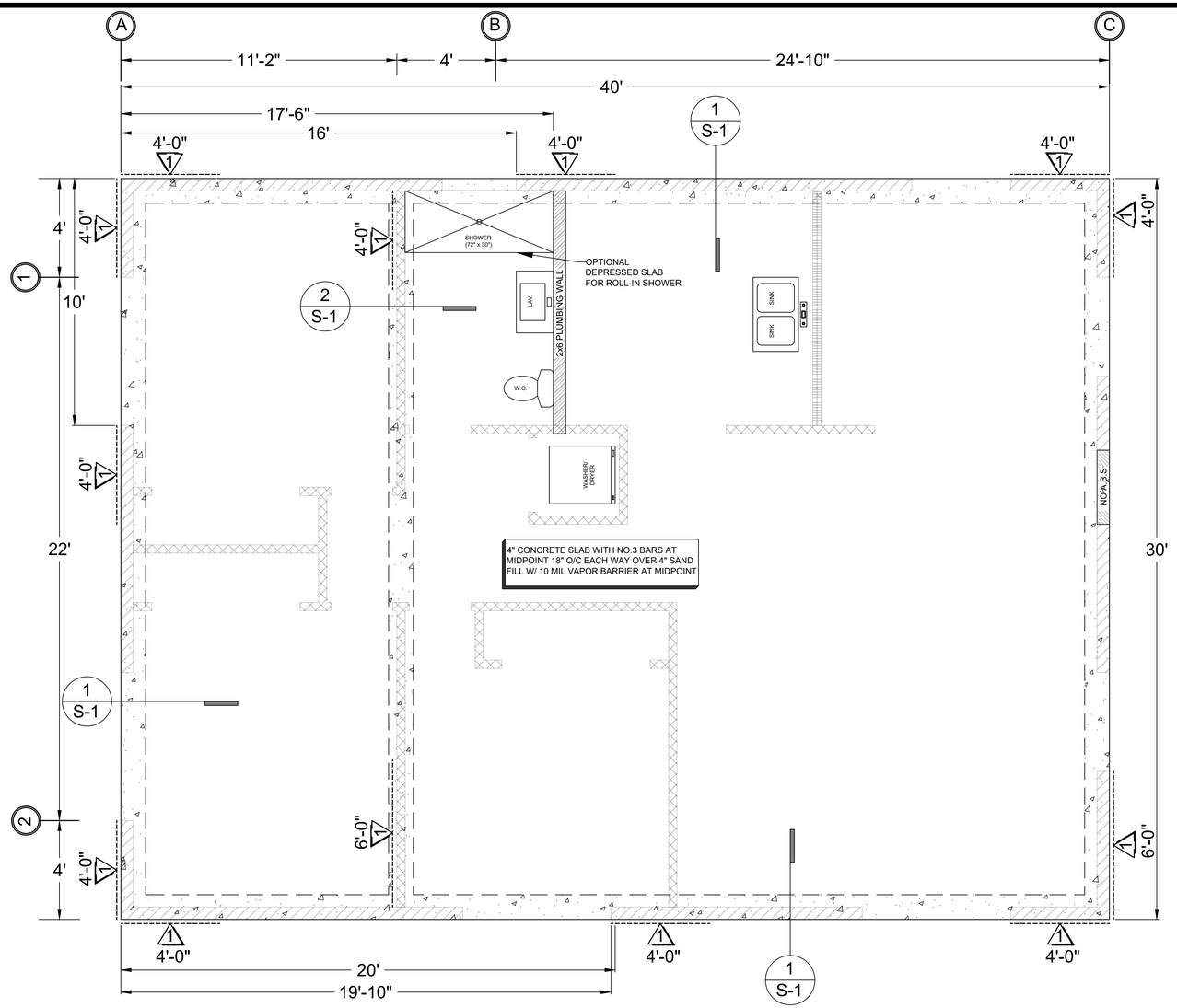

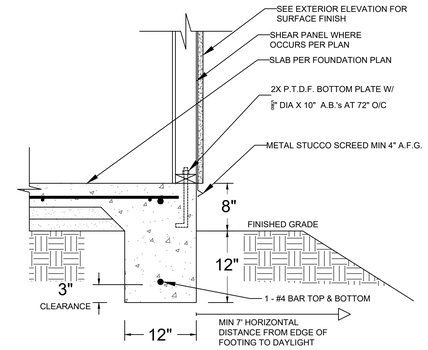

DETAIL 1
(NTS)

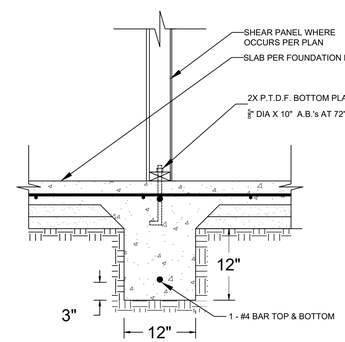

DETAIL 2
(NTS)

FOUNDATION PLAN NOTES

1. ALL ANCHORS BOLTS SHALL BE 5/8" DIAMETER AND HAVE A MINIMUM EMBEDMENT OF 7 INCHES INTO CONCRETE (UNO) AND NOT SPACED MORE THAN 6 FEET APART
2. 3"X3"X0.229" PLATE WASHERS SHALL BE USED ON EACH SILL PLATE ANCHOR BOLT
3. FOR STANDARD CUT WASHERS PLACED BETWEEN PLATE WASHER AND NUT, HOLE IN PLATE WASHER MAY BE DIAGONALLY SLOTTED WITH MAXIMUM 3/16" LARGER WIDTH THAN BOLT DIAMETER AND MAXIMUM 1-3/4" SLOT LENGTH
4. PROVIDE A MINIMUM OF TWO ANCHOR BOLTS PER SILL PLATE WITH ONE BOLT LOCATED MAXIMUM 12" AND MINIMUM 7 BOLT DIAMETERS FROM EACH END OF EACH SECTION.
5. BOLTS LOCATED IN THE MIDDLE THIRD OF THE SILL PLATE WIDTH
6. FASTENERS FOR PRESSURE-PRESERVATIVE TREATED AND FIRE RETARDANT TREATED WOOD SHALL BE HOT-DIPPED ZINC COATED GALVANIZED, STAINLESS STEEL OR COPPER
7. NO LPG PIPING ASSEMBLIES ALLOWED IN OR BENEATH SLABS WITHIN THE STRUCTURE

WOOD STRUCTURAL PANEL SHEATHING

MARK	MINIMUM NAIL		MINIMUM WOOD STRUCTURAL PANEL SPAN RATING	MINIMUM NOMUNAL PANEL THICKNESS (in)	MAXIMUM WALL STUD SPACING (in)	PANEL NAIL SPACING	
	SIZE	PENETRATION (in)				EDGES (inches o/c)	FIELD (inches o/c)
1	6D COMMON	1.5	24:0	3/8"	16	6	12
	8D COMMON	1.75	24:16	7/16"	16	6	12

WOOD STRUCTURAL PANELS SHALL CONFORM TO DOC PS 1, DOC PS 2 OR ANSI/APA PRP 210, CSA O437 OR CSA O325. PANELS SHALL BE IDENTIFIED BY A GRADE MARK OR CERTIFICATE OF INSPECTION ISSUED BY AN APPROVED AGENCY

VERTICAL JOINTS OF PANEL SHEATHING SHALL OCCUR OVER AND BE FASTENED TO COMMON STUDS. HORIZONTAL JOINTS IN BRACED WALL PANELS SHALL OCCUR OVER AND BE FASTENED TO COMMON BLOCKING OF A MINIMUM 1 1/2 INCH THICKNESS.

LEGEND

(#) BRACED WALL LINE

FOUNDATION PLAN
3/8" = 1'-0"

By using these standard plans, the user agrees to release the County of San Diego from any and all claims, liabilities, suits, and demands on account of any injury, damage, or loss to persons or property, including injury or death, or economic losses, arising out of the use of these construction documents. The use of these plans does not eliminate or reduce the user's responsibility to verify any and all information.

County of San Diego, Planning & Development Services
1200 SF ACCESSORY DWELLING UNIT
BUILDING DIVISION

Sheet Number

S1

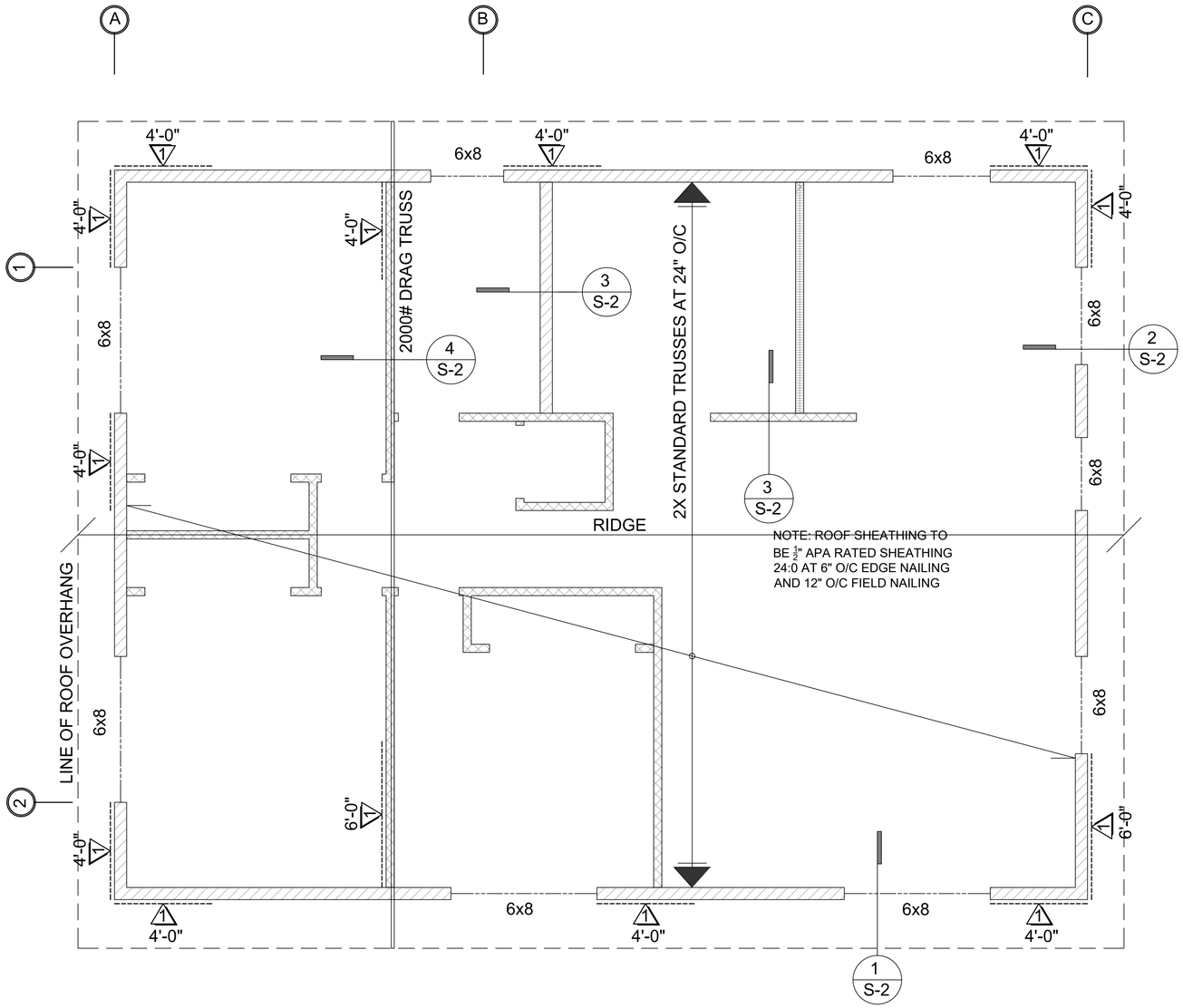

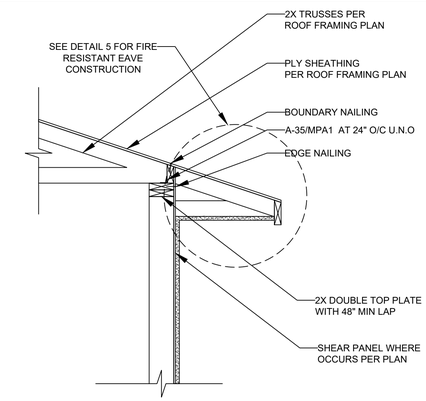

DETAIL 1
(NTS)

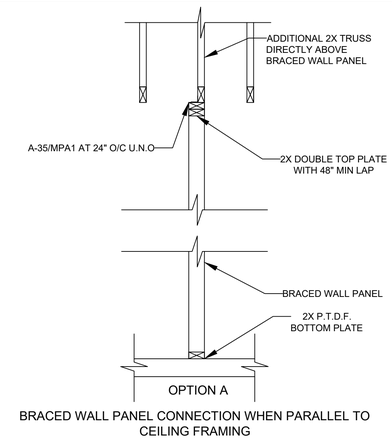

BRACED WALL PANEL CONNECTION WHEN PARALLEL TO CEILING FRAMING

DETAIL 4
(NTS)

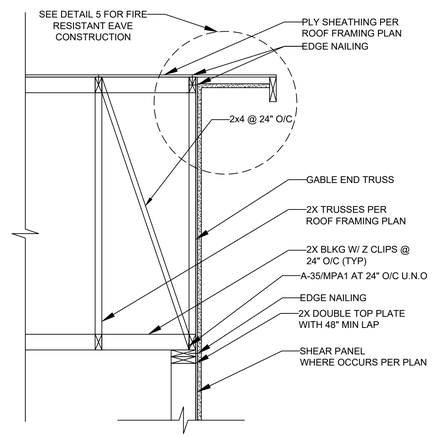

DETAIL 2
(NTS)

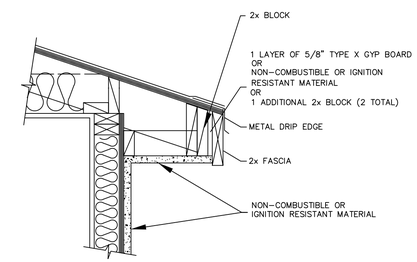

DETAIL 5
(NTS)

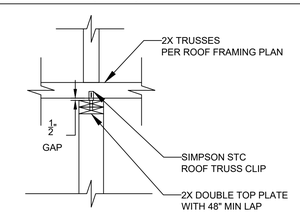

TRUSS PERPENDICULAR TO FRAMING MEMBER

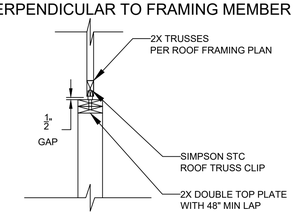

TRUSS PARALLEL TO FRAMING MEMBER

DETAIL 3
(NTS)

WOOD STRUCTURAL PANEL SHEATHING							
MARK	MINIMUM NAIL		MINIMUM WOOD STRUCTURAL PANEL SPAN RATING	MINIMUM NOMUNAL PANEL THICKNESS (in)	MAXIMUM WALL STUD SPACING (in)	PANEL NAIL SPACING	
	SIZE	PENETRATION (in)				EDGES (inches o/c)	FIELD (inches o/c)
1	6D COMMON	1.5	24:0	3/8"	16	6	12
	8D COMMON	1.75	24:16	7/16"	16	6	12

WOOD STRUCTURAL PANELS SHALL CONFORM TO DOC PS 1, DOC PS 2 OR ANSI/APA PRP 210, CSA O437 OR CSA O325.
PANELS SHALL BE IDENTIFIED BY A GRADE MARK OR CERTIFICATE OF INSPECTION ISSUED BY AN APPROVED AGENCY

VERTICAL JOINTS OF PANEL SHEATHING SHALL OCCUR OVER AND BE FASTENED TO COMMON STUDS.
HORIZONTAL JOINTS IN BRACED WALL PANELS SHALL OCCUR OVER AND BE FASTENED TO COMMON BLOCKING OF A MINIMUM 1 1/2 INCH THICKNESS.

LEGEND

BRACED WALL LINE

ROOF FRAMING PLAN
3/8" = 1'-0"

By using these standard plans, the user agrees to release the County of San Diego from any and all claims, liabilities, suits, and demands on account of any injury, damage, or loss to persons or property, including injury or death, or economic losses, arising out of the use of these construction documents. The use of these plans does not eliminate or reduce the user's responsibility to verify any and all information.

County of San Diego, Planning & Development Services
1200 SF ACCESSORY DWELLING UNIT
BUILDING DIVISION

Sheet Number

S2

A. General

Applicable codes. All projects shall comply with the *2019 California Building Code* (CBC) *and/or California Residential Code* (CRC), *2019 California Green Building Standards Code* (CalGreen), *2019 California Electrical Code* (CEC), 2019 *California Mechanical Code* (CMC), 2019 *California Plumbing Code* (CPC), 2019 *California Fire Code* (CFC), 2019 *California Building Energy Efficiency Standards* (CBEES), and all County of San Diego amendments.

A. Electrical, Plumbing, and Mechanical

1. **Exterior lighting.** All projects shall comply with the County of San Diego lighting ordinance.
2. **GFCI outlets.** Ground Fault Circuit Interrupter (GFCI) outlets are required in bathrooms, at kitchen countertops, at laundry and wet bar sinks, in garages, in crawlspaces, in unfinished basements, and outdoors. (CEC 210.8)
3. **AFCI outlets.** Electrical circuits in bedrooms, living rooms, dining rooms, dens, closets, hallways, or similar rooms must be protected by Arc Fault Circuit Interrupters (AFCI). (CEC 210.12)
4. **Luminaire requirements.** Installed luminaires shall meet the efficacy and fixture requirements of CBEES 150.0(k).
5. **Smoke detectors in building remodels**. Smoke detectors are required in each existing sleeping room, outside each separate sleeping area in the immediate vicinity of sleeping rooms, and on each story of a dwelling including basements. Battery-operated detectors are acceptable in existing areas with no construction taking place and in alterations not resulting in removal of interior wall or ceiling finishes and without access via an attic, crawl space, or basement. (CRC R314.3)
6. **Carbon monoxide detectors in building remodels**. Carbon monoxide detectors are required outside each separate sleeping area in the immediate vicinity of sleeping rooms and on each story of a dwelling including basements. Battery-operated detectors are acceptable in existing areas with no construction taking place and in alterations not resulting in removal of interior wall or ceiling finishes and without access via an attic, crawl space, or basement. (CRC R315.3)
7. **Water heater seismic strapping.** Minimum two 3/4-inch-by-24-gauge straps required around water heaters, with 1/4-inch-by-3-inch lag bolts attached directly to framing. Straps shall be at points within upper third and lower third of water heater vertical dimension. Lower connection shall occur minimum 4 inches above controls. (CPC 507.2)
8. **Gas appliances in garages.** Water heaters and heating/cooling equipment capable of igniting flammable vapors shall be placed on minimum 18-inch-high platform unless listing report number provided showing ignition-resistant appliance. (CPC 507.13 and CMC 305.1)
9. **Impact protection of appliances.** Water heaters and heating/cooling equipment subject to vehicular impact shall be protected by bollards or an equivalent measure. (CPC 507.13.1 and CMC 305.11)
10. **Water closet clearance.** Minimum 30-inch-wide by 24-inch-deep clearance required at front of water closets. (CPC 402.5)
11. **Shower size.** Shower compartments shall have minimum area of 1024 square inches and be able to encompass a 30-inch-diameter circle. Shower doors shall have a minimum 22-inch unobstructed width. (CPC 408.5 and CPC 408.6)
12. **Fireplace appliances.** Fireplaces with gas appliances are required to have the flue damper permanently fixed in the open position and fireplaces with LPG appliances are to have no 'pit' or 'sump' configurations. (CMC 303.7.1)
13. **Chimney clearance.** Minimum 2-foot chimney clearance required above building within 10-foot horizontally of chimney. The chimney shall extend minimum 3 feet above highest point where chimney passes through roof. (CRC R1003.9)

C. Mechanical Ventilation and Indoor Air Quality (ASHRAE 62.2-2010)

1. **Transfer air.** Ventilation air shall be provided directly from the outdoors and not as transfer air from adjacent dwelling units or other spaces, such as garages, unconditioned crawlspaces, or unconditioned attics. (CBEES 150.0(o))
2. **Instructions and labeling.** Ventilation system controls shall be labeled and the home owner shall be provided with instructions on how to operate the system. (CBEES 150.0(o))
3. **Combustion and solid-fuel burning appliances.** Combustion appliances shall be properly vented and air systems shall be designed to prevent back drafting. (CBEES 150.0(o))
4. **Garages.** The wall and openings between occupiable spaces and the garage shall be sealed. HVAC systems that include air handlers or return ducts located in garages shall have total air leakage of no more than 6% of total fan flow when measured at 0.1 in. w.c. using California Title 24 or equivalents. (CBEES 150.0(o))
5. **Minimum filtration.** Mechanical systems supplying air to occupiable space through ductwork shall be provided with a filter having a minimum efficiency of MERV 6 or better. (CBEES 150.0(o))
6. **Air inlets.** Air inlets (not exhaust) shall be located away from known contaminants. (CBEES 150.0(o))
7. **Air moving equipment.** Air moving equipment used to meet either the whole-building ventilation requirement or the local ventilation exhaust requirement shall be rated in terms of airflow and sound. (CBEES 150.0(o))
   - a. All continuously operating fans shall be rated at a maximum of 1.0 sone.
   - b. Intermittently operated whole-building ventilation fans shall be rated at a maximum of 1.0 sone.
   - c. Intermittently operated local exhaust fans shall be rated at maximum of 3.0 sone.
   - d. Remotely located air-moving equipment (mounted outside of habitable spaces) need not meet sound requirements if at least 4 feet of ductwork between fan and intake grill.

D. Foundation and Underfloor

1. **Foundation reinforcement.** Continuous footings and stem walls shall be provided with a minimum two longitudinal No. 4 bars, one at the top and one at the bottom of the footing. (CRC R403.1.3.3)
2. **Shear wall foundation support.** Shear walls shall be supported by continuous foundations. (CRC 403.1.2)
3. **Concrete slabs-on-grade.** Slabs-on-grade shall be minimum 3-1/2-inches thick. (CRC R506.1)
4. **Vapor retarder.** A 6-mil polyethylene or approved vapor retarder with joints lapped minimum 6 inches shall be placed between a concrete slab-on-grade and the base course or subgrade. (CRC 506.2.3)
5. **Anchor bolts and sills.** Foundation plates or sills shall be bolted or anchored to the foundation or foundation wall per the following (CRC R403.1.6 and CRC R602.11.1):
   - a. Minimum 1/2-inch-diameter steel bolts
   - b. Bolts embedded at least 7 inches into concrete or masonry
   - c. Bolts spaced maximum 6 feet on center
   - d. Minimum two bolts per plate/sill piece with one bolt located maximum 12 inches and minimum 7 bolt diameters from each end of each sill plate/piece
   - e. Minimum 3-inch by 3-inch by 0.299-inch steel plate washer between sill and nut on each bolt
6. **Hold-downs.** All hold-downs must be tied in place prior to foundation inspection.
7. **Protection of wood against decay**. Naturally durable or preservative-treated wood shall be provided in the following locations (CRC R317.1):
   - a. All wood in contact with ground, embedded in concrete in direct contact with ground, or embedded in concrete exposed to weather
   - b. Wood joists within 18 inches and wood girders within 12 inches of the exposed ground in crawl spaces shall be of naturally durable or preservative-treated wood
   - c. Wood framing members that rest on concrete or masonry exterior foundation walls and are less than 8 inches from exposed earth shall be of naturally durable or preservative-treated wood
   - d. Wood framing, sheathing, and siding on the exterior of the building and having clearance less than 6 inches from the exposed ground or less than 2 inches vertically from concrete steps, porch slabs, patio slabs, and similar horizontal surface exposed to weather
   - e. Sills and sleepers on concrete or masonry slab in direct contact with ground unless separated from such slab by impervious moisture barrier

D. Foundation and Underfloor (Continued)

   - f. Ends of wood girders entering masonry or concrete walls with clearances less than 1/2 inch on tops, sides, and ends
   - g. Wood structural members supporting moisture-permeable floors or roofs exposed to weather, such as concrete or masonry slabs, unless separated from such floors or roofs by an impervious moisture barrier
   - h. Wood furring strips or other wood framing members attached directly to interior of exterior concrete or masonry walls below grade except where vapor retarder applied between wall and furring strips or framing members
8. **Underfloor ventilation.** Underfloor areas shall have ventilation openings through foundation walls or exterior walls, with minimum net area of ventilation openings of 1 square foot for each 150 square feet of underfloor area. On such ventilating opening shall be within 3 feet of each corner of the building. (CRC R408.1)
9. **Underfloor access.** Underfloor areas shall be provided with a minimum 18-inch by 24-inch access opening. (CRC R408.4)

E. Wood Framing

1. **Fastener requirements.** The number, size, and spacing of fasteners connecting wood members/elements shall not be less than that set forth in CRC Table R602.3(1). (CRC R502.9, CRC R602.3, and CRC R802.2)
2. **Stud size, height, and spacing.** The size, height, and spacing of studs shall be in accordance with CRC Table R602.3(5). (CRC R602.3.1)
3. **Sill plate.** Studs shall have full bearing on nominal 2-inch thick or larger sill plate with width at least equal to stud width. (CRC R602.3.4)
4. **Bearing studs.** Where joists, trusses, or rafters are spaced more than 16 inches on center and the bearing studs below are spaced 24 inches on center, such members shall bear within 5 inches of the studs beneath. (CRC R602.3.3)
5. **Drilling and notching of studs.** Any stud in an exterior wall or bearing partition may be cut or notched to a depth not exceeding 25% of its width. Studs in nonbearing partitions may be notched to a depth not to exceed 40% of a single stud width. Any stud may be bored or drilled, provided the diameter of the resulting hole is no more than 60% of the stud width, the edge of the hole is no more than 5/8 inch to the edge of the stud, and the hole is not located in the same section as a cut or notch. Studs located in exterior wall or bearing partitions drilled over 40% and up to 60% shall also be doubled with no more than two successive studs bored. (CRC R602.6)
6. **Top plate.** Wood stud walls shall be capped with a double top plate installed to provide overlapping at corners and at intersections with other partitions. End joints in double top plates shall be offset at least 24 inches. Joints in plates need not occur over studs. Plates shall be minimum nominal 2 inches thick and have width at least equal to width of studs. (CRC R602.3.2)
7. **Top plate splices.** Top plate lap splices shall be face-nailed with minimum 8 16d nails on each side of splice. (CRC R602.10.8.1)
8. **Drilling and notching of top plate.** When piping or ductwork is placed in or partly in an exterior wall or interior load-bearing wall, necessitating cutting, drilling, or notching of the top plate by more than 50% of its width, a galvanized metal tie not less than 0.054-inch thick and 1-1/2-inches wide shall be fastened across and to the plate at each side of the opening with not less than 8 10d nails having a minimum length of 1-1/2 inches at each side or equivalent. The metal tie must extend minimum 6 inches past the opening. (CRC R602.6.1)
9. **Cripple walls.** Foundation cripple walls shall be framed of studs not less in size than the studding above. Cripple walls more than 4 feet in height shall have studs sized as required for an additional story. Cripple walls with stud height less than 14 inches shall be sheathed on at least one side with a wood structural panel fastened to both the top and bottom plates in accordance with Table R602.3(1), or the cripple walls shall be constructed of solid blocking. Cripple walls shall be supported on continuous foundations. (CRC R602.9)
10. **Wall bracing.** Buildings shall be braced in accordance with the methods allowed per CRC R602.10.2, CRC R602.10.4, and/or CRC R602.10.5.
11. **Braced wall line spacing.** Spacing between braced wall lines shall not exceed 20 feet or alternate provisions of CRC R602.10.1.3.
12. **Shear wall cumulative length.** The cumulative length of shear walls within each braced wall line shall meet the provisions of CRC Table R602.10.3(1) for wind loads and CRC Table R602.10.3(2) for seismic loads. (CRC R602.10.1.1)
13. **Shear wall spacing.** Shear walls shall be located not more than 25 feet on center. (CRC R602.10.2.2)
14. **Shear wall offset.** Shear walls may be offset out-of-plan not more than 4 feet from the designated braced wall line and not more than 8 feet from any other offset wall considered part of the same braced wall line. (CRC R602.10.1.2)
15. **Shear wall location.** Shear walls shall be located at the ends of each braced wall line or meet the alternate provisions of CRC R602.10.2.2.
16. **Individual shear wall length.** Shear walls shall meet minimum length requirements of CRC R602.10.6.5.1.
17. **Cripple wall bracing.** Cripple walls shall be braced per CRC R602.10.11.
18. **Shear wall and diaphragm nailing.** All shear walls, roof diaphragms, and floor diaphragms shall be nailed to supporting construction per CRC Table R602.3(1). (CRC R604.3)
19. **Shear wall joints.** All vertical joints in shear wall sheathing shall occur over, and be fastened to, common studs. Horizontal joints in shear walls shall occur over, and be fastened to, minimum 1-1/2-inch-thick blocking. (CRC R602.10.10)
20. **Framing over openings.** Headers, double joists, or trusses of adequate size to transfer loads to vertical members shall be provided over window and door openings in load-bearing walls and partitions. (CBC 2304.3.2)
21. **Joists under bearing partitions.** Joists under parallel bearing partitions shall be of adequate size to support the load. Double joists, sized to adequately support the load, that are separated to permit the installation of piping or vents shall be full-depth solid-blocked with minimum 2-inch nominal lumber spaced at maximum 4 feet on center. Bearing partitions perpendicular to joists shall not be offset from supporting girders, walls, or partitions more than the joist depth unless such joists are of sufficient size to carry the additional load. (CRC R502.4)
22. **Joists above or below shear walls.** Where joists are perpendicular to a shear wall above or below, a rim joist, band joist, or blocking shall be provided along the entire length of the shear wall. Where joists are parallel to a shear wall above or below, a rim joist, end joist, or other parallel framing shall be provided directly above and/or below the shear wall. Where a parallel framing member cannot be located directly above and/or below the shear wall, full-depth blocking at 16-inch spacing shall be provided between the parallel framing members to each side of the shear wall. (CRC R602.10.8)
23. **Floor member bearing.** The ends of each floor joist, beam, or girder shall have minimum 1-1/2 inches of bearing on wood or metal and minimum 3 inches of bearing on masonry or concrete except where supported on a 1-inch-by-4-inch ribbon strip and nailed to the adjoining stud or by the use of approved joist hangers. (CRC R502.6)
24. **Floor joist lap.** Floor joists framing opposite sides over a bearing support shall lap minimum 3 inches and shall be nailed together within minimum 3 10d face nails. A wood or metal splice with strength equal to or greater than that provided by the lap is permitted. (CRC R502.6.1)
25. **Floor joist-to-girder support.** Floor joists framing into the side of a wood girder shall be supported by approved framing anchors or on ledger strips minimum nominal 2 inches by 2 inches. (CRC R502.6.2)
26. **Floor joist lateral restraint.** Floor joists shall be supported laterally at ends and each intermediate support by minimum 2-inch full-depth blocking, by attachment to full-depth header, band joist, or rim joist, to an adjoining stud, or shall be otherwise provided with lateral support to prevent rotation. (CRC R502.7)
27. **Floor joist bridging.** Floor joists exceeding nominal 2 inches by 12 inches shall be supported laterally by solid blocking, diagonal bridging (wood or metal), or a continuous 1-inch-by-3-inch strip nailed across the bottom of joists perpendicular to joists at maximum 8-foot intervals. (CRC R502.7.1)
28. **Framing of floor openings.** Openings in floor framing shall be framed with a header and trimmer joists. When the header joist span does not exceed 4 feet, the header joist may be a single member the same size as the floor joist. Single trimmer joists may be used to carry a single header joist located within 3 feet of the trimmer joist bearing. When the header joist span exceeds 4 feet, the trimmer joists and header joist shall be doubled and of sufficient cross section to support the ceiling joists or rafters framing into the header. Tail joists over 12 feet long shall be supported at the header by framing anchors or on ledger strips minimum 2 inches by 2 inches. (CRC R502.10)

E. Wood Framing (Continued)

29. **Girders.** Girders for single-story construction or girders supporting loads from a single floor shall not be less than 4 inches by 6 inches for spans 6 feet or less, provided that girders are spaced not more than 8 feet on center. Other girders shall be designed to support the loads specified in the CBC. Girder end joints shall occur over supports. When a girder is spliced over a support, an adequate tie shall be provided. The ends of beams or girders supported on masonry or concrete shall not have less than 3 inches of bearing. (CBC 2308.7)
30. **Ridges, hips, and valleys**. Rafters shall be framed to a ridge board or to each other with a gusset plate as a tie. Ridge boards shall be minimum 1-inch nominal thickness and not less in depth than the cut end of the rafter. At all valley and hips, there shall be a valley or hip rafter not less than 2-inch nominal thickness and not less in depth than the cut end of the rafter. Hip and valley rafters shall be supported at the ridge by a brace to a bearing partition or be designed to carry and distribute the specific load at that point. Where the roof pitch is less than 3:12 slope (25% gradient), structural members that support rafters and ceilings joists, such as ridges, hips, and valleys, shall be designed as beams. (CRC R802.3)
31. **Ceiling joist and rafter connections.** Ceiling joists and rafters shall be nailed to each other per CRC Table R802.5.1(9), and the rafter shall be nailed to the wall top plate per CRC Table R602.3(1). Ceiling joists shall be continuous or securely joined per CRC Table R802.5.1(9) where they meet over interior partitions and are nailed to adjacent rafters to provide a continuous tie across the building when such joists are parallel to rafters. Where ceiling joists are not connected to the rafters at the wall top plate, joists connected higher in the attic shall be installed as rafter ties, or rafter ties shall be installed to provide a continuous tie. Where ceiling joists are not parallel to rafters, rafter ties shall be installed. Rafter ties shall be minimum 2 inches by 4 inches nominal, installed per CRC Table R802.5.1(9), or connections of equivalent capacities shall be provided. Where ceilings joists or rafter ties are not provided, the ridge formed by these rafters shall be supported by a wall or engineer-designed girder. (CRC R802.3.1)
32. **Ceiling joists lapped.** Ends of ceiling joists shall be lapped minimum 3 inches or butted over bearing partitions or beams and toenailed to the bearing element. Where ceiling joists provide resistance to rafter thrust, lapped joists shall be nailed together per CRC Table R602.3(1) and butted joists shall be tied together in a manner to resist such thrust. (CRC R802.3.2)
33. **Collar ties.** Collar ties or ridge straps to resist wind uplift shall be connected in the upper third of the attic space. Collar ties shall be a minimum 1 inch by 4 inches nominal and spaced at maximum 4 feet on center. (CRC R802.3.1)
34. **Purlins.** Purlins installed to reduce the span of rafters shall be sized not less than the required size of the rafters they support. Purlins shall be continuous and shall be supported by 2-inch-by-4-inch nominal braces installed to bearing walls at a minimum 45-degree slope from horizontal. The braces shall be spaced maximum 4 feet on center with a maximum 8-foot unbraced length. (CRC R802.5.1)
35. **Roof/ceiling member bearing.** The ends of each rafter or ceiling joist shall have not less than 1-1/2 inches of bearing on wood or metal and not less than 3 inches of bearing on masonry or concrete. (CRC R802.6)
36. **Roof/ceiling member lateral support.** Roof framing members and ceiling joists with a nominal depth-to-thickness ratio exceeding 5:1 shall be provided with lateral support at points of bearing to prevent rotation. (CRC R802.8)
37. **Roof/ceiling bridging.** Rafters and ceiling joists with a nominal depth-to-thickness ratio exceeding 6:1 shall be supported laterally by solid blocking, diagonal bridging (wood or metal), or a continuous 1-inch-by-3-inch wood strip nailed across the rafters or ceiling joists at maximum 8-foot intervals. (CRC R802.8.1)
38. **Framing of roof/ceiling openings.** Openings in roof and ceiling framing shall be framed with a header and trimmer joists. When the header joist span does not exceed 4 feet, the header joist may be a single member the same size as the ceiling joist or rafter. Single trimmer joists may be used to carry a single header joist located within 3 feet of the trimmer joist bearing. When the header joist span exceeds 4 feet, the trimmer joists and header joist shall be doubled and of sufficient cross section to support the ceiling joists or rafters framing into the header. Approved hangers shall be used for the header-joist-to-trimmer-joist connections when the header joist span exceeds 6 feet. Tail joists over 12 feet long shall be supported at the header by framing anchors or on ledger strips minimum 2 inches by 2 inches. (CRC R502.10)
39. **Roof framing above shear walls.** Rafters or roof trusses shall be supported to top plates of shear walls with blocking between the rafters or trusses. (CRC R602.10.8)
40. **Roof diaphragm under fill framing.** Roof plywood shall be continuous under California fill framing.
41. **Roof diaphragm at ridges.** Minimum 2-inch nominal blocking required for roof diaphragm nailing at ridges.
42. **Blocking of roof trusses.** Minimum 2-inch nominal blocking required between trusses at ridge lines and at points of bearing at exterior walls.
43. **Truss clearance**. Minimum 1/2-inch clearance required between top plates of interior non-bearing partitions and bottom chords of trusses.
44. **Drilling, cutting, and notching of roof/floor framing.** Notches in solid lumber joists, rafters, blocking, and beams shall not exceed one-sixth the member depth, shall be not longer than one-third the member depth, and shall not be located in the middle one-third of the span. Notches at member ends shall not exceed one-fourth the member depth. The tension side of members 4 inches or greater in nominal thickness shall not be notched except at member ends. The diameter of holes bored or cut into members shall not exceed one-third the member depth. Holes shall not be closer than 2 inches to the top or bottom of the member or to any other hole located in the member. Where the member is also notched, the hole shall not be closer than 2 inches to the notch. (CRC R502.8.1)
45. **Exterior landings, decks, balconies, and stairs.** Such elements shall be positively anchored to the primary structure to resist both vertical and lateral forces or shall be designed to be self-supporting. Attachment shall not be accomplished by use of toenails or nails subject to withdrawal. (CRC R311.3)
46. **Fireblocking.** Fireblocking shall be provided in the following locations (CRC R302.11 and CRC R1003.19):
   - a. In concealed spaces of stud walls and partitions, including furred spaces, and parallel rows of studs or staggered studs, as follows:
   - i. Vertically at the ceiling and floor levels
   - ii. Horizontally at intervals not exceeding 10 feet
   - b. At all interconnections between concealed vertical and horizontal spaces such as occur at soffits, drop ceilings, and cove ceilings
   - c. In concealed spaces between stair stringers at the top and bottom of the run
   - d. At openings around vents, pipes, ducts, cables and wires at ceiling and floor level, with an approved material to resist the free passage of flame and products of combustion
   - e. At chimneys and fireplaces per item E.49
   - f. Cornices of a two-family dwelling at the line of dwelling-unit separation
47. **Fireblocking materials.** Except as otherwise specified in items E.48 and E.49, fireblocking shall consist of the following materials with the integrity maintained (CRC R302.11.1):
   - a. Two-inch nominal lumber
   - b. Two thicknesses of one-inch nominal lumber with broken lap joints
   - c. One thickness of 23/32-inch wood structural panel with joints backed by 23/32-inch wood structural panel
   - d. One thickness of 3/4-inch particleboard with joints backed by 3/4-inch particleboard
   - e. 1/2-inch gypsum board
   - f. 1/4-inch cement-based millboard
   - g. Batts or blankets of mineral or glass fiber of other approved materials installed in such a manner as to be securely retained in place. Batts or blankets of mineral or glass fiber or other approved non-rigid materials shall be permitted for compliance with the 10-foot horizontal fireblocking in walls constructed using parallel rows of studs or staggered studs. Unfaced fiberglass batt insulation used as fireblocking shall fill the entire cross-section of the wall cavity to a minimum height of 16 inches measured vertically. When piping, conduit, or similar obstructions are encountered, the insulation shall be packed tightly around the obstruction. Loose-fill insulation material shall not be used as a fireblock unless specifically tested in the form and manner intended for use to demonstrate its ability to remain in place and to retard the spread of fire and hot gases.
48. **Fireblocking at openings around vents, pipes, ducts, cables, and wires at ceiling and floor level.** Such openings shall be fireblocked with an approved material to resist the free passage of flame and products of combustion. (CRC R302.11)

E. Wood Framing (Continued)

49. **Fireblocking of chimneys and fireplaces.** All spaces between chimneys and floors and ceilings through which chimneys pass shall be fireblocked with noncombustible material securely fastened in place. The fireblocking of spaces between chimneys and wood joists, beams, or headers shall be self-supporting or be placed on strips of metal or metal lath laid across the spaces between combustible material and the chimney. (CRC R1003.19)
50. **Draftstopping.** In combustible construction where there is usable space both above and below the concealed space of a floor/ceiling assembly, draftstops shall be installed so that the area of the concealed space does not exceed 1000 square feet. Draftstopping shall divide the concealed space into approximately equal areas. Where the assembly is enclosed by a floor membrane above and a ceiling membrane below, draftstopping shall be provided in floor/ceiling assemblies under the following circumstances (CRC R302.12):
   - a. Ceiling is suspended under the floor framing
   - b. Floor framing is constructed of truss-type open-web or perforated members
51. **Draftstopping materials.** Draftstopping shall not be less than 1/2-inch gypsum board, 3/8-inch wood structural panels, or other approved materials adequately supported. Draftstopping shall be installed parallel to the floor framing members unless otherwise approved by the building official. The integrity of draftstops shall be maintained. (CRC R302.12.1)
52. **Combustible insulation clearance.** Combustible insulation shall be separated minimum 3 inches from recessed luminaires, fan motors, and other heat-producing devices. (CRC R302.14)

F. General Material Specifications

1. **Lumber.** All joists, rafters, beams, and posts 2-inches to 4-inches thick shall be No. 2 grade Douglas Fir-Larch or better. All posts and beams 5 inches and thicker shall be No. 1 grade Douglas Fir-Larch or better. Studs not more than 8 feet long shall be stud-grade Douglas Fir-Larch or better when supporting not more than one floor, roof, and ceiling. Studs longer than 8 feet shall be No. 2 grade Douglas Fir-Larch or better.
2. **Concrete.** Concrete shall have a minimum compressive strength of 2,500 psi at 28 days and shall consist of 1 part cement, 3 parts sand, 4 parts 1-inch maximum size rock, and not more than 7-1/2 gallons of water per sack of cement. (CRC R402.2)
3. **Mortar.** Mortar used in construction of masonry walls, foundation walls, and retaining walls shall conform to ASTM C 270 and shall consist of 1 part portland cement, 2-1/4 to 3 parts sand, and 1/4 to 1/2 part hydrated lime. (CBC 2103.2)
4. **Grout.** Grout shall conform to ASTM C 476 and shall consist of 1 part portland cement, 1/10 part hydrated lime, 2-1/4 to 3 parts sand, and 1 to 2 parts gravel. Grout shall attain a minimum compressive strength of 2,000 psi at 28 days. (CBC 2103.3)
5. **Masonry.** Masonry units shall comply with ASTM C 90 for load-bearing concrete masonry units. (CBC 2103.1)
6. **Reinforcing steel.** Reinforcing steel used in construction of reinforced masonry or concrete structures shall be deformed and comply with ASTM A 615. (CBC 2103.4)
7. **Structural steel.** Steel used as structural shapes such as wide-flange sections, channels, plates, and angles shall comply with ASTM A36. Pipe columns shall comply with ASTM A53. Structural tubes shall comply with ASTM A500, Grade B.
8. **Fasteners for preservative-treated wood.** Fasteners for preservative-treated and fire-retardant-treated wood - including nuts and washers -- shall be of hot dipped zinc-coated galvanized steel, stainless steel, silicon bronze, or copper. (CRC R317.3.1)

   Exception: 1/2-inch diameter or greater steel bolts

   Exception: Fasteners other than nails and timber rivets may be of mechanically deposited zinc-coated steel with coating weights in accordance with ASTM B 695, Class 55 minimum

   Exception: Plain carbon steel fasteners acceptable in SBX/DOT and zinc borate preservative-treated wood in an interior, dry environment
9. **Fasteners for fire-retardant-treated wood.** Fasteners for fire-retardant-treated wood used in exterior applications or wet or damp locations shall be of hot dipped zinc-coated galvanized steel, stainless steel, silicon bronze, or copper. (CRC R317.3.3)

G. Roofing and Weatherproofing

1. **Roof covering.** All roof covering shall be installed per applicable requirements of CBC 1507. Roof coverings shall be at least Class A rated in accordance with ASTM E 108 or UL 790, which shall include coverings of slate, clay or concrete roof tile, exposed concrete roof deck, ferrous or copper shingles or sheets. (County Building Code 92.1.1505.1)
2. **Roof flashing.** Flashing shall be installed at wall and roof intersections, at gutters, wherever there is a change in roof slope or direction, and around roof openings. Where flashing is of metal, the metal shall be corrosion-resistant with a thickness of not less than 0.019 inch (No. 26 galvanized sheet). (CRC R903.2.1)
3. **Crickets and saddles.** A cricket or saddle shall be installed on the ridge side of any chimney or penetration more than 30 inches wide as measured perpendicular to the slope. Cricket or saddle covering shall be sheet metal or the same material as the roof covering. (CRC R903.2.2)
4. **Water-resistive barrier.** A minimum of one layer of No. 15 asphalt felt shall be attached to studs or sheathing of all exterior walls. Such felt or material shall be applied horizontally, with the upper layer lapped over the lower layer minimum 2 inches. Where joints occur, felt shall be lapped minimum 6 inches. The felt shall be continuous to the top of walls and terminated at penetrations and building appendages in a manner to maintain a weather-resistant exterior wall envelope. (CRC R703.2)
5. **Wall flashing.** Approved corrosion-resistant flashing shall be applied shingle fashion at the following locations to prevent entry of water into the wall cavity or penetration of water to the building structural framing components (CRC R703.8):
   - a. Exterior door and window openings, extending to the surface of the exterior wall finish or to the water-resistive barrier for subsequent drainage
   - b. At the intersection of chimneys or other masonry construction with frame or stucco walls, with projecting lips on both sides under stucco copings
   - c. Under and at the ends of masonry, wood, or metal copings and sills
   - d. Continuously above all projecting wood trim
   - e. Where exterior porches, decks, or stairs attach to a wall or floor assembly of wood-frame construction
   - f. At wall and roof intersections
   - g. At built-in gutters
6. **Dampproofing.** Dampproofing materials for foundation walls enclosing usable space below grade shall be installed on the exterior surface of the wall, and shall extend from the top of the footing to finished grade. (CRC R406.1)
7. **Weep screed.** A minimum 0.019-inch (No. 26 galvanized sheet gage), corrosion-resistant weep screed or plastic weep screed with a minimum vertical attachment flange of 3-1/2 inches shall be provided at or below the foundation plate line on exterior stud walls in accordance with ASTM C 92. The weep screed shall be placed a minimum 4 inches above the earth or 2 inches above paved areas and shall be of a type allowing trapped water to drain to the exterior of the building. (CRC R703.7.2.1)

H. Grading and soils

1. **Grading permit**. Grading permit required if volume of earth moved exceeds 200 cubic yards or if any cuts or fills exceed 8 feet in height/depth. (County Grading Ordinance 202)
2. **Compaction report.** Compaction report required for fill material 12 inches or more in depth. (CBC 1803.5.8)

I. Green Building Standards Code (CALGreen) Requirements

1. **Applicability**. CalGreen residential mandatory measures shall apply to every newly constructed building or structure and within any addition or alteration increasing a building's conditioned area, volume, or size. (CalGreen 101.3, CalGreen 301.1.1)

   Exception: All residential buildings undergoing permitted alterations, additions, or improvements shall replace noncompliant plumbing fixtures with water-conserving plumbing fixtures per CalGreen 301.1.1 and CalGreen 4.303.1

I. (CALGreen) Requirements (Continued)

2. **Water conserving plumbing fixtures and fittings.** Plumbing fixtures and fittings shall comply with the following per CalGreen 4.303.1:
   - a. Water closets: Maximum 1.28 gallons per flush
   - b. Urinals: Maximum 0.5 gallons per flush
   - c. Single showerheads: Maximum flow rate of 2.0 gallons per minute at 80 psi
   - d. Multiple showerheads serving one shower: Maximum combined flow rate of 2.0 gallons per minute at 80 psi
   - e. Lavatory faucets: Maximum flow rate of 1.2 gallons per minute at 60 psi, minimum flow rate of 0.8 gallons per minute at 20 psi
   - f. Kitchen faucets: Maximum flow rate of 1.8 gallons per minute at 60 psi

   Exception: Temporary increase allowed to maximum 2.2 gallons per minute at 60 psi if faucet defaults back to maximum 1.8 gallons per minute at 60 psi
3. **Irrigation controllers.** Automatic irrigation system controllers for landscaping shall comply with the following (CalGreen 4.304.1):
   - a. Controllers shall be weather- or soil moisture-based controllers that automatically adjust irrigation in response to changes in plants' needs as weather conditions change.
   - b. Weather-based controllers without integral rain sensors or communication systems that account for local rainfall shall have a separate wired or wireless rain sensor which connects or communicates with the controller(s). Soil moisture-based controllers are not required to have rain sensor input.
4. **Joints and openings.** Openings in the building envelope separating conditioned space from unconditioned space needed to accommodate utility and other penetrations must be sealed in compliance with the *California Energy Code*. (CALGreen 4.406.1)

   Exception: Annular spaces around pipes, electric cables, conduits or other openings in plates at exterior walls shall be protected against the passage of rodents by closing such opening with cement mortar, concrete masonry or a similar method acceptable to the enforcing agency.
5. **Construction waste reduction, disposal, and recycling.** Reduce and/or salvage for reuse a minimum of 65 percent of the nonhazardous construction and demolition debris. (CALGreen 4.408.1)

   Exception: Excavated soil and land-clearing debris.

   Exception: Alternate waste reduction methods developed by working with local agencies if diversion or recycle facilities capable of compliance with this item do not exist or are not located reasonably close to the jobsite

   The County of San Diego, Department of Public Works, Construction & Demolition (C&D) Facilities Guide is online at:
   http://www.sdcounty.ca.gov/dpw/recycling/Files/Construction_Guide_SJ8_Pgs_1-27.pdf.
6. **Construction waste management plan.** A construction waste management plan shall be prepared and available on site during construction. Documentation demonstrating compliance with the plan shall be accessible during construction for the enforcing agency. (CALGreen 4.408.2) The plan:
   - a. Identify the construction and demolition waste materials to be diverted from disposal by recycling, reuse on the project or salvage for future use or sale
   - b. Specify if construction and demolition waste materials will be sorted on-site (source-separated) or bulk mixed (single stream)
   - c. Identify diversion facilities where the construction and demolition waste materials will be taken
   - d. Identify construction methods employed to reduce the amount of construction and demolition waste generated
   - e. Specify that the amount of construction and demolition waste materials diverted shall be calculated by weight or volume, but not by both
7. **Operation and maintenance manual.** Prior to final inspection, a manual, compact disc, web-based reference, or other acceptable media which includes all of the following shall be placed in the building (CALGreen 4.410.1):
   - a. Directions to owner or occupant that manual shall remain with the building throughout the life cycle of the structure.
   - b. Operation and maintenance instructions for the following:
   - i. Equipment and appliances, including water-saving devices and systems, HVAC system, photovoltaic systems, water-heating systems and other major appliances and equipment.
   - ii. Roof and yard drainage, including gutters and downspouts.
   - iii. Space conditioning systems, including condensers and air filters.
   - iv. Landscape irrigation systems.
   - v. Water reuse systems.
   - c. Information from local utility, water, and waste recovery providers on methods to further reduce resource consumption, including recycle programs and locations.
   - d. Public transportation and/or carpool options available in the area.
   - e. Educational material on the positive impacts of an interior relative humidity between 30-60 percent and what methods an occupant may use to maintain the relative humidity level in that range.
   - f. Information about water-conserving landscape and irrigation design and controllers which conserve water.
   - g. Instructions for maintaining gutters and downspouts and the importance of diverting water at least 5 feet away from the foundation.
   - h. Information on required routine maintenance measures, including, but not limited to, caulking, painting, grading around the building, etc.
   - i. Information about state solar energy and incentive programs available.
   - j. A copy of all special inspection verifications required by the enforcing agency or code.
8. **Covering of duct openings and protection of mechanical equipment during construction.** At the time of rough installation or during storage on the construction site and until final startup of the heating and cooling equipment, all duct and other related air distribution component openings shall be covered with tape, plastic, sheetmetal or other methods acceptable to the enforcing agency to reduce the amount of dust or debris which may collect in the system. (CALGreen 4.504.1)
9. **Adhesives, sealants, caulks, paints, and coatings pollutant control.** Adhesives (including carpet adhesives), sealants, caulks, paints, and coatings shall comply with VOC limits per CALGreen 4.504.2. Verification of compliance shall be provided at the request of the enforcing agency. (CALGreen 4.504.2.1)
10. **Carpet systems.** All carpet installed in the building interior shall meet the testing and product requirements of one of the following (CALGreen 4.504.3):
   - a. Carpet and Rug Institute's Green Label Plus Program (all carpet cushion must meet the requirements of this program).
   - b. California Department of Public Health Standard Practice for the testing of VOCs (Specification 01350).
   - c. NSF/ANSI 140 at the Gold level.
   - d. Scientific Certifications Systems Indoor Advantage™ Gold.
11. **Resilient flooring systems.** At least 80 percent of the floor area receiving resilient flooring shall comply with one of or more of the following (CALGreen 4.504.4):
   - a. VOC emission limits defined in the Collaborative for High Performance Schools (CHPS) High Performance Products Database
   - b. Products compliant with CHPS criteria certified under the Greenguard Children & Schools program
   - c. Certification under the Resilient Floor Covering Institute (RFCI) FloorScore program
   - d. Meet the California Department of Public Health, "Standard Method for the Testing and Evaluation of Volatile Organic Chemical Emissions from Indoor Sources Using Environmental Chambers," Version 1.1, February 2010 (also known as Specification 01350)
12. **Composite wood products.** Hardwood plywood, particleboard and medium density fiberboard composite wood products used on the interior or exterior of the building shall meet the requirements for formaldehyde as specified in ARB's Air Toxics Control Measure for Composite Wood (17 CCR 93120 et seq.) by or before the dates specified in those sections, as shown in CalGreen Table 4.504.5. The following limits are in parts per million (CALGreen 4.504.5):

a. Hardwood plywood veneer core	0.05
b. Hardwood plywood composite core	0.05
c. Particle board	0.09
d. Medium-density fiberboard (MDF)	0.11
e. Thin MDF (5/16 inch or less)	0.13

I. (CALGreen) Requirements (Continued)

13. **Moisture content of building materials.** Building materials with visible signs of water damage shall not be installed. Wall and floor framing shall not be enclosed when the framing members exceed 19 percent moisture content. Moisture content shall be verified in compliance with the following (C