Bowman

**DATE: 12/5/2024** **FILE: 4192.10/360025-02-040**

**TO: County of San Diego**

**FROM: Jeff Novoa & Chelisa Pack, Bowman**

**SUBJECT: SWQMP Memorandum to accompany SWQMP Report for the resubmittal of the Revised Tentative Map Ocean Breeze Ranch Project PDS2023-TM-5615TER/MUP-16-012/MUP-16-013TE**

---

This SWQMP Memo has been prepared to support the SWQMP associated with the Revised Tentative Map for the Ocean Breeze Ranch project. This memo is to help clarify the resubmittal of the Preliminary SWQMP. The revised Tentative Map is currently under concurrent processing with the Final Engineering Rough Grading Plans and reports. The Final Engineering version of the SWQMP was recently updated. Rather than updating the Preliminary SWQMP again to reflect the most recent changes on the site plan, we are electing to submit this memo with the Final Engineering version of the SWQMP in order to satisfy the requirement to submit the Preliminary SWQMP as a part of the TM Replacement package. That way the Tentative Map report could be exactly consistent with the Final Engineering report. Per discussion with the County, the final engineering SWQMP will be reviewed as part of the Revised Tentative Map. The comments associated with the TM-5616TER have been addressed in this report resubmittal. The table below has been provided to cross reference the page number of the TM Preliminary Grading Plan and Rough Grading Plan to provide the reviewer a cross-reference table in order to locate BMPs and other drainage structures between the two different plan sets. See below.

| BMP ID # | Page # of Revised TM Preliminary Grading Plan (PDS2023-TM-5615TER) | Page # of Rough Grading Plan (PDS2020-LDGRMJ-30295) |
|---|---|---|
| 1A | 13 | 193 |
| 1B | 3 | 194 |
| 2A | 12 | 195 |
| 2B | 12 | 196 |
| 2C | 12 | 197 |
| 2D | 12 | 198 |
| 2E | 12 | 199 |
| 2F | 12 | 199 |
| 2G | 12 | 200 |
| 2H | 14 | 200 |
| 2I | 12 | 198 |
| 3A | 5 | 201 |
| 3B | 8 | 201 |
| 3C | 8 | 202 |
| 3D | 8 | 203 |
| 3E | 9 | 204 |

| | | |
|---|---|---|
| 3F | 9 | 204 |
| 3G | 11 | 205 |
| 3H | 17 | 205 |
| 3I | 17 | 206 |
| 3J | 5 | 207 |
| 3K | 5 | 207 |
| 1A-1 | 13 | 193 |
| 1A-2 | 13 | 193 |
| 1A-3 | 13 | 193 |
| 1B-1 | 3 | 194 |
| 2A-1 | 12 | 208 |
| 2A-2 | 12 | 208 |
| 2B-1 | 12 | 196 |
| 2B-2 | 12 | 210 |
| 2C-1 | 12 | 197 |
| 2H-1 | 14 | 210 |
| 3C-1 | 8 | 202 |
| 3D-1 | 8 | 203 |

A submittal record of the revised TM SWQMP has been provided below.

**Submittal Record:** List the dates of SWQMP and plan submittals and updates. Briefly describe key changes from previous versions. If responding to plan check comments, note this in the entry and attach the responses as applicable.

| No. | Date | Summary of Changes |
|---|---|---|
| **Preliminary Design / Planning / CEQA** | | |
| No. | Date | -------TM REPLACEMENT ---------- |
| 1 | 7/5/2023 | Adjusted elevations for earthwork balance, added equestrian fire access road, added additional BMPs, updated calculations to reflect site plan changes, updated infiltration feasibility |
| 2 | 3/1/2024 | Addressing County Comments, and minor grading edits. |
| 3 | 8/9/2024 | Addressing County Comments |
| 4 | 12/6/2024 | Addressing County Comments, Final Engineering SWQMP with Memo submitted |

A response to comment matrix has been included in this submittal package to respond the latest comments.

# STORM WATER QUALITY MANAGEMENT PLAN

# OCEAN BREEZE RANCH

PDS#2020-LDGRMJ-30295

County of San Diego, CA

APN# 125-080-25, 125-080-26, 125-131-57, 127-191-21, 127-191-22

November 7, 2024

Prepared For:

Ocean Breeze Farms, LLC
1550 South Coast Highway, Suite 201,
Laguna Beach, CA 92651
(949) 497-0200

PDP SWQMP Prepared By:

PROJECT DESIGN CONSULTANTS
a Bowman company

701 B Street, Suite 800
San Diego, CA 92101
619.235.6471

PDC Job No. 4192.10

# County of San Diego

## Stormwater Quality Management Plan (SWQMP)

## For Priority Development Projects (PDPs)

Use for all PDPs (see Storm Water Intake Form, Part 4)

Priority Development Project

| Project Information | | Development type ☒ New development ☐ Redevelopment |
|---|---|---|
| **Project Name** | Ocean Breeze Ranch | |
| **Project Address** | 5820 West Lilac Road, Bonsall, CA 92003 | |
| **Assessor's Parcel # (APN)** | 125-080-25, 125-080-26, 125-131-57, 127-191-21, 127-191-22 | |
| **Permit # / Record ID** | PDS2020-LDGRMJ-30295, Tract No. 5615, PDS2023-TM-5615R | |
| **Project category (select one)** | ☐ Commercial | ☐ Minor subdivision* |
| | ☐ Industrial | ☒ Major subdivision* |
| | ☐ Single family residential lot | ☐ Multi-family residential* |
| | *If residential, is a Homeowners Association (HOA) proposed? ☒ Yes ☐ No | |

| Project Applicant / Project Proponent | | |
|---|---|---|
| **Name** | Ocean Breeze Ranch, LLC. Attn. James Conrad | |
| **Address** | 1550 SOUTH COAST HIGHWAY, SUITE 201, LAGUNA BEACH, CA 92651 | |
| **Phone** | 949-497-0200 | **Email:** jconradarc@gmail.com |

| SWQMP Preparer | | |
|---|---|---|
| **Name** | Chelisa Pack | |
| **Company (if applicable)** | Project Design Consultants, a BOWMAN Company | |
| **Address** | 701 B Street, Suite 800 San Diego, CA 92101 | |
| **Phone** | (619) 881-2575 | **Email:** cpack@bowman.com |
| **PE Number (if applicable)** | 71026 | |

## Preparer's Certification

I understand that the County of San Diego has adopted minimum requirements for managing urban runoff, including storm water, from land development activities, as described in the County of San Diego BMP Design Manual. The BMP Design Manual is a design manual for compliance with local County of San Diego Watershed Protection Ordinance (Sections 67.801 et seq.) and regional MS4 Permit (California Regional Water Quality Control Board San Diego Region Order No. R9-2013-0001, as amended by Order No. R9-2015-0001 and Order No. R9-2015-0100) requirements for storm water management.

This SWQMP is intended to comply with applicable requirements of the BMP Design Manual. I certify that it has been completed to the best of my ability and accurately reflects the project being proposed and the applicable BMPs proposed to minimize the potentially negative impacts of this project's land development activities on water quality. I understand and acknowledge that the plan check review of this SWQMP by County staff is confined to a review and does not relieve me as the person in charge of overseeing the selection and design of storm water BMPs for this project, of my responsibilities for project design.

| **Signature** | **Date** March 4, 2024 |
|---|---|

***COUNTY ACCEPTED***

*SWQMP Approved By*: *Approval Date*:

**** NOTE* Approval does not constitute compliance with regulatory requirements.***

## Scope of SWQMP Submittal (Required)

Select the option that describes the scope of this SWQMP Submittal. Document your selection as indicated.

| SWQMP Scope | Required Documentation |
|---|---|
| ☒ ***a. SWQMP addresses the entire project*** | No additional documentation. |
| ☐ ***b. SWQMP implements requirements of an earlier master SWQMP submittal*** | Include a copy of the previous submittal as **Attachment 4**. |
| ☒ ***c. First of multiple SWQMP submittals*** | Identify below the elements addressed in this submittal and in future submittals. |

*(1) Elements addressed in current submittal (streets, common areas, first project phase, etc.):*

Note that this report is being concurrently updated for a replacement TM and a resubmittal of a grading plan around the same time, due to the site plan changes proposed to get the earthwork quantities more in balance.

*(2) Elements to be addressed in future submittal(s) (individual lots, future project phases, etc.)*:

There are a few offsite traffic mitigations that are proposed to be a part of the project, but are not included herein. The project team proposes that the offsite mitigations be addressed under the green street exemption, and therefore, the team requests confirmation from County Watershed Protection Division.

**Submittal Record:** List the dates of SWQMP and plan submittals and updates. Briefly describe key changes from previous versions. If responding to plan check comments, note this in the entry and attach the responses as applicable.

| No. | Date | Summary of Changes |
|---|---|---|
| **Preliminary Design / Planning / CEQA** | | |
| 1 | 9/16/2016 | Initial Submittal |
| 2 | 5/24/2018 | Updated report to reflect completely new site plan. Update to text body, update to Attachments 1, 3, 4, and 6. |
| 3 | 12/17/2018 | Update to text body, update to Attachments 1, 2, 3, 6, and 7. |
| 4 | 5/21/2019 | Addressing County Comments, and including Equestrian Center SSD BMPs. |
| 5 | 7/31/2019 | Update to report text body and Attachments 1, 3, 4, 5, and 6 for offsite roundabout design change. |
| No. | Date | -------TM REPLACEMENT ---------- |
| 1 | 7/5/2023 | Adjusted elevations for earthwork balance, added equestrian fire access road, added additional BMPs, updated calculations to reflect site plan changes, updated infiltration feasibility |
| 2 | 3/1/2024 | Addressing County Comments, and minor grading edits. |
| 3 | 8/9/2024 | Addressing County Comments |
| **Final Design** | | |
| 1 | 9/28/2020 | Initial Submittal |
| 2 | 7/26/2023 | Minor updates since 7/5/2023 submittal. |
| 3 | 6/7/2024 | Updated PA3 grading, storm drain and site plan changes. |

| | | |
|---|---|---|
| No. | 11/7/2024 | Updates to Response to Comments |
| **Plan Changes** | | |
| 1 | Date | Initial Submittal |
| 2 | Date | Summary of Change |
| 3 | Date | Summary of Change |
| No. | Date | Summary of Change |

# PDP SWQMP Submittal Checklist

**SWQMP Tables**: All of the tables below must be completed.


☒ Table 1: Baseline BMPs for Existing and Proposed Site Features ..... Page 2

☒ Table 2: Baseline BMPs for Pollutant-generating Sources ..... Page 3

☒ Table 3: Explanations and Justifications for Table 1 and 2 Baseline BMPs ..... Page 4

☒ Table 4: DMA Structural Compliance Strategies and Documentation ..... Page 5

☒ Table 5: Critical Coarse Sediment Yield Area (CCSYA) Requirements ..... Page 6

☒ Table 6: Minimum Construction Stormwater BMPs ..... Page 7

☒ Table 7: Explanations and Justifications for Construction Phase BMPs ..... Page 8


**SWQMP Attachments**[1]: Use the checklist below to identify which attachments will be included with this submittal. Attachments with boxes already checked (☒) are required for all projects. The applicability of other attachments will be determined upon completing this form.

☒ Attachment 1: Storm Water Intake Form

☒ Attachment 2: DMA Exhibits and Construction Plan Sheets

☐ Attachment 3: Reserved for Future Use

☐ Attachment 4: Previous SWQMP Submittals

☒ Attachment 5: Existing Site and Drainage Description

☒ Attachment 6: Documentation of DMAs without Structural BMPs

☒ Attachment 7: Documentation of DMAs with Structural Pollutant Control BMPs

☒ Attachment 8: Documentation of DMAs with Structural Hydromodification Management BMPs

☒ Attachment 9: Management of Critical Coarse Sediment Yield Areas

☒ Attachment 10: BMP Installation Verification Form

☒ Attachment 11: BMP Maintenance Agreements and Plans

☐ Attachment 12: Documentation of Alternative Compliance Projects (ACPs)

After completing the remainder of this form, check the applicable SWQMP Attachment boxes to summarize your selections.

[1] All SWQMP Attachments are available at www.sandiego.gov/stormwater under the Development Resources tab, Submittal Templates.

Template Date: September 15, 2020 Preparation Date: 6/5/2024

## Table 1 – Baseline BMPs for Existing and Proposed Site Features

**A. BMPs for Existing Natural Site Features (See Fact Sheet BL-1)**

*1. Check the boxes below for each existing feature on the site.*

*2. Select the BMPs to be implemented for each identified feature. Explain why any BMP not selected is infeasible in Table 3.*

| | Conserve natural features (SD-G) | Provide buffers around waterbodies (SD-H) |
|---|---|---|
| ☒ Natural waterbodies | ☒ | ☒ |
| ☐ Natural storage reservoirs & drainage corridors | ☐ | --- |
| ☒ Natural areas, soils, & vegetation (incl. trees) | ☒ | --- |

**B. BMPs for Common Impervious Outdoor Site Features (See Fact Sheet BL-2)**

*1. Check the boxes below for each proposed feature.*

*2. Select the BMPs to be implemented for each proposed feature. If neither BMP **SD-B** nor **SD-I** is selected for a feature, explain why both BMPs are infeasible in Table 3.*

| | a. Direct runoff to pervious areas (SD-B) | b. Construct surfaces from permeable materials (SD-I) | c. Minimize the size of impervious areas |
|---|---|---|---|
| ☒ Streets and roads | ☒ | ☐ | ☒ *Check this box to confirm that all impervious areas on the site will be minimized where feasible.* |
| ☒ Sidewalks & walkways | ☒ | ☒ | |
| ☐ Parking areas & lots | ☐ | ☐ | |
| ☒ Driveways | ☐ | ☐ | *If this box is not checked, identify the surfaces that cannot be minimized in Table 3, and explain why it is infeasible to do so.* |
| ☒ Patios, decks, & courtyards | ☒ | ☐ | |
| ☒ Hardcourt recreation areas | ☐ | ☐ | |
| ☐ Other: | ☐ | ☐ | |

**C.** ☒ **BMPs for Rooftop Areas:** *Check this box if rooftop areas are proposed and select at least one BMP below.* **(See Fact Sheet BL-3)**

*If no BMPs are selected, explain why they are infeasible in Table 3.*

| 1. Direct runoff to pervious areas (SD-B) | 2. Install green roofs (SD-C) | 3. Install rain barrels (SD-E) |
|---|---|---|
| ☒ | ☐ | ☐ |

**D.** ☒ **BMPs for Landscaped Areas:** *Check this box if landscaping is proposed and select at least one BMP below.* **(See Fact Sheet BL-4)**

*If no BMPs are selected, explain why they are infeasible in Table 3.*

| 1. Sustainable Landscaping (SD-K) |
|---|
| ☒ |

**Note:** All features and BMPs must be shown on applicable construction plans. See applicable Fact Sheets in Appendix C of the BMP Design Manual for additional information.

**Note:** Use Table 3 to explain BMP infeasibility or inapplicability, or to describe features or BMPs not listed in this table. Additional explanation may be required by the County.

## Table 2 – Baseline BMPs for Pollutant-generating Sources

☐ If this is a **Small Residential Project**, check this box and skip the rest of this table.

**A. Management of Stormwater Discharges**

| **1. Identify all proposed outdoor work areas below** (☐ *Check here if none are proposed*) | **2. Which BMPs will be used to prevent materials from contacting rainfall or runoff?** (See Fact Sheet BL-5) *(Select all feasible BMPs for each work area[2])* | | | **3. Where will runoff from the work area be routed?** (See Fact Sheet BL-6) *(Select one or more option for each work area)* | | | |
|---|---|---|---|---|---|---|---|
| | **Overhead covering (rooftops, etc.) (SC-A)** | **Separation of flows from adjacent areas (berms, etc.) (SC-B)** | **Wind protection (screens, etc.) (SC-C)** | **Sanitary sewer[3] (SC-D)** | **Containment system (SC-E)** | **Stormwater S-BMP or SSD-BMP[4]** | **Other[5]** |
| ☒ Trash & Refuse Storage | ☒ | ☐ | ☒ | ☐ | ☐ | ☐ | ☐ |
| ☐ Materials & Equipment Storage | ☐ | ☐ | ☐ | ☐ | ☐ | ☐ | ☐ |
| ☐ Loading & Unloading | ☐ | ☐ | --- | ☐ | ☐ | ☐ | ☐ |
| ☐ Fueling | ☐ | ☐ | --- | ☐ | ☐ | ☐ | ☐ |
| ☐ Maintenance & Repair | ☐ | ☐ | --- | ☐ | ☐ | ☐ | ☐ |
| ☐ Vehicle & Equipment Cleaning | ☐ | ☐ | --- | ☐ | ☐ | ☐ | ☐ |
| ☐ Other: | ☐ | ☐ | --- | ☐ | ☐ | ☐ | ☐ |

**B. Prevention of Non-stormwater Discharges** (See Fact Sheet BL-7)

Select one option for each feature below:

| | | |
|---|---|---|
| • **Storm drain inlets and catch basins …** | ☐ are not proposed | ☒ will be labeled with stenciling or signage to discourage dumping **(SC-F)** |
| • **Educational BMP Signage …** | ☒ are not proposed | ☐ will be labeled with educational signage for BMP **(SC-G)** |
| • **Interior work surfaces, floor drains, & sumps …** | ☐ are not proposed | ☒ will not discharge directly or indirectly to the MS4 or receiving waters |
| • **Drain lines (e.g., air conditioning, boiler, etc.) …** | ☐ are not proposed | ☒ will not discharge directly or indirectly to the MS4 or receiving waters |
| • **Fire sprinkler test water …** | ☐ are not proposed | ☒ will not discharge directly or indirectly to the MS4 or receiving waters |

**Note:** All outdoor features and BMPs in this table must be shown on applicable construction plans. See applicable Fact Sheets in Appendix C of the BMP Design Manual for additional information.

**Note:** Use Table 3 to explain BMP infeasibility or inapplicability, or to describe features or BMPs not listed in this table. Additional explanation may be required by the County.

[2] Each BMP is required where feasible. If none are selected for any feature, explain why they are infeasible in Table 3.

[3] Separate wastewater agency approvals may be required.

[4] Structural Treatment Control BMPs (S-BMPs) and Significant Site Design BMPs (SSD-BMPs) may not receive discharges from work areas that concentrate pollutants in a manner that will impair their functioning. Discharges from the proposed work area must also be included in DCV calculations for the applicable BMP.

[5] Describe other proposed options for managing stormwater discharges in Table 3.

## Table 3 – Explanations and Justifications for Table 1 and 2 Baseline BMPs

☐ **Check here if no explanations or justifications for Table 1 or 2 BMPs are required.**

- **Required Justifications**: Provide explanations of BMP inapplicability and/or infeasibility as indicated per Tables 1 and 2.
- **If Requested**: Justify why specific BMPs will not be implemented or will only be partially implemented.
- **Additional Explanation**: Describe any proposed features and/or BMPs not listed in Tables 1 or 2.

| **BMP-Feature Combination** | | **Explanation** |
|---|---|---|
| Feature | Driveways | Not feasible to incorporate permeable material or dispersion to the driveways in this project. Runoff generated by the driveways flow towards the road into curb inlets to a basin for treatment. |
| BMP | BMP | |
| Feature | Feature | Explanation |
| BMP | BMP | |
| Feature | Feature | Explanation |
| BMP | BMP | |
| Feature | Feature | Explanation |
| BMP | BMP | |
| Feature | Feature | Explanation |
| BMP | BMP | |
| Feature | Feature | Explanation |
| BMP | BMP | |
| Feature | Feature | Explanation |
| BMP | BMP | |

## Table 4: DMA Structural Compliance Strategies and Documentation

**Part A – Selection and Application Structural Performance Standards**

***1. Selection of Standards*** (select one; see BMPDM Section 6.1)

☒ a. Pollutant control + hydromodification ☒ b. Pollutant control only (project is exempt from hydromodification requirements)

***2. Application of Structural Performance Standards*** (select one; see BMPDM Section 1.7)

☒ **New Development Projects:** Standards apply to all impervious surfaces.

☐ **Redevelopment Projects:** Complete the calculations below. Select the applicable scenario based on the results.

| a. Existing impervious area (ft²) | b. Impervious area created / replaced (ft²) | c. % Impervious created / replaced [(b/a)*100] |
|---|---|---|
| 508,274 | 3,178,341 | 625 |

☐ *Scenario 1: c is 50% or more*: Performance standards apply to all impervious surfaces (a + b).

☐ *Scenario 2: c is less than 50%*: Performance standards apply only to created or replaced impervious surfaces (b only).

**Part B – Compliance Strategies and Required Attachments**

***1.****Complete and submit each of the applicable attachments on the right.*

| Att. 1 | Att. 2 | Att. 3 | Att. 4 | Att. 5 |
|---|---|---|---|---|
| Storm Water Intake Form ☒ | DMA Exhibits and Construction Plan Sheets ☒ | N/A ☐ | Previous SWQMP Submittals (see inside cover) ☐ | Existing Site and Drainage Description ☒ |

***2.*** *Indicate each compliance strategy below that will be used for one or more DMAs on the site.*

| | Att. 6 DMAs without Structural BMPs | Att. 7 DMAs w/ Structural Pollutant Control BMPs | Att. 8 DMAs w/ Structural Hydromod. BMPs | Att. 9 Critical Coarse Sediment Yield Areas | Att. 10 BMP Installation Verification Form | Att. 11 Maintenance Agreements/ Plans | Att. 12 Alternative Compliance Projects |
|---|---|---|---|---|---|---|---|
| ☒Self-mitigating DMAs (BMPDM Section 5.2.1) | ☒ | | | ☒ | | | |
| ☐De Minimis DMAs (BMPDM Section 5.2.2) | ☐ | | | ☐ | | | |
| ☒Self-retaining DMAs (BMPDM Section 5.2.3) | ☒ | | | ☒ | ☒ | | |
| Structural BMPs (select all that apply) | | | | | | | |
| ☒Pollutant Control BMPs (BMPDM Section 5.4) | | ☒ | | ☒ | ☒ | ☒ | |
| ☒Hydromodification Control BMPs (BMPDM Chapter 6) | | | ☒ | ☒ | ☒ | ☒ | |
| ☐Alternative Compliance Project (BMPDM Section 1.8) | | | | ☐ | ☐ | ☐ | ☐ |

☒ **Please check this box after you complete this list. Corresponding attachments will be automatically selected on the right.**

- *Attachments 1, 2, and 5 are required for all projects.*

Template Date: September 15, 2020 Preparation Date: 6/5/2024

## Table 5: Critical Coarse Sediment Yield Area (CCSYA) Requirements

- Identify one applicable compliance pathway for the PDP below.
- Document your selection in **Attachment 9**.

**A. Hydromodification Management Exemption (BMPDM Sections 1.6 and 6.1)**

☒ **PDP is Exempt from Hydromodification Management Requirements**

Select if hydromodification management exemption was selected in Table 4 Part A.1.

**B. Watershed Management Area (WMAA) Mapping (BMPDM Appendix H.1.1.2)**

☐ **WMAA mapping demonstrates the following:**

a. <5% of potential onsite CCYSAs will be impacted (built on or obstructed)

b. All potential upstream offsite CCYSAs will be bypassed

A portion of the project is exempt.

**C. Resource Protection Ordinance (RPO) Methods (BMPDM Appendix H.1.1.1)**

☒ **RPO Scenario 1: PDP is subject to and in compliance with RPO requirements**

a. Project requires one or more discretionary permits (RPO applicability is confirmed during discretionary review)

b. Onsite AND upstream offsite CCSYAs will be avoided and/or bypassed

☐ **RPO Scenario 2: PDP is entirely exempt/not subject to RPO requirements**[6]

a. Project does not require discretionary permits

b. Project will bypass all upstream offsite CCSYAs (no requirements for onsite CCSYAs)

**D. No Net Impact Analysis (BMPDM Appendix H.4)**

☐ **Project demonstrates no net impact to receiving waters**

[6] Does not include PDPs utilizing exemption(s) via RPO Section 86.604(e)(2)(cc) or 86.604(e)(3).

## Table 6 –Minimum Construction Stormwater BMPs

| Minimum Required BMPs by Activity Type<br>Select all applicable activities and at least one BMP for each. | References<br>Caltrans[7] | <br>County of San Diego | |
|---|---|---|---|
| ☒ **Erosion Control for Disturbed Slopes** (choose at least 1 per season) | | | |
| ☒ Vegetation Stabilization Planting[8] (Summer) | SS-2, SS-4 | | |
| ☒ Hydraulic Stabilization Hydroseeding (Summer) | SS-4 | | |
| ☒ Bonded Fiber Matrix or Stabilized Fiber Matrix[9] (Winter) | SS-3 | | |
| ☒ Physical Stabilization Erosion Control Blanket (Winter) | SS-7 | | |
| ☒ **Erosion control for disturbed flat areas (slope < 5%)** | | | |
| ☒ County Standard Lot Perimeter Protection Detail | SC-2 | PDS 659[10] | |
| ☐ Use of Item A erosion control measures on flat areas | SS-3, SS-4, SS-7 | | |
| ☒ County Standard Desilting Basin (must treat all site runoff) | SC-2 | PDS 660[11] | |
| ☒ Mulch, straw, wood chips, soil application | SS-6, SS-8 | | |
| ☒ **Energy dissipation (required to control velocity for concentrated runoff or dewatering discharge)** | | | |
| ☒ Energy Dissipater Outlet Protection | SS-10 | RSD D-40[12] | |
| ☒ **Sediment control for all disturbed areas** | | | |
| ☒ Silt Fence | SC-1 | | |
| ☒ Fiber Rolls (Straw Wattles) | SC-5 | | |
| ☒ Gravel & Sand Bags | SC-6, SC-8 | | |
| ☒ Dewatering Filtration | NS-2 | | |
| ☒ Storm Drain Inlet Protection | SC-10 | | |
| ☐ Engineered Desilting Basin (sized for 10-year flow) | SC-2 | | |
| ☒ **Preventing offsite tracking of sediment** | | | |
| ☒ Stabilized Construction Entrance | TC-1 | | |
| ☒ Construction Road Stabilization | TC-2 | | |
| ☐ Entrance/Exit Tire Wash | TC-3 | | |
| ☐ Entrance/Exit Inspection & Cleaning Facility | TC-1 | | |
| ☒ Street Sweeping and Vacuuming | SC-7 | | |
| ☒ **Materials Management** | | | |
| ☒ Material Delivery & Storage | WM-1 | | |
| ☒ Spill Prevention and Control | WM-4 | | |
| ☒ **Waste Management[13]** | | | |
| ☒ Waste Management Concrete Waste Management | WM-8 | | |
| ☒ Solid Waste Management | WM-5 | | |
| ☒ Sanitary Waste Management | WM-9 | | |
| ☒ Hazardous Waste Management | WM-6 | | |

[7] See Caltrans 2017 Construction Site Best Management Practices (BMP) Manual available at: https://dot.ca.gov/programs/construction/storm-water-and-water-pollution-control/manuals-and-handbooks
[8] Planting or Hydroseeding may be installed between May 1st and August 15th. Slope irrigation must be in place and operable for slopes >3 feet. Vegetation must be watered and established prior to October 1st. A contingency physical BMP must be implemented by August 15th if vegetation is not established by that date. If landscaping is proposed, erosion control measures must also be used while landscaping is being established. Established vegetation must have a subsurface mat of intertwined mature roots with a uniform vegetative coverage of 70 percent of the natural vegetative coverage or more on all disturbed areas.
[9] All slopes over three feet must have established vegetative cover prior to final permit approval.
[10] County PDS 659. Standard Lot Perimeter Protection Design System (Bldg. Division)
[11] County PDS 660. County Standard Desilting Basin for Disturbed Areas of 1 Acre or Less Bldg. Division
[12] Regional Standard Drawing D-40 – Rip Rap Energy Dissipater (also acceptable for velocity reduction)
[13] Applicants are responsible to apply appropriate BMPs for specific wastes (e.g., BMP WM-8 for concrete).

Template Date: September 15, 2020 Preparation Date: 6/5/2024

## Table 7 – Explanations and Justifications for Construction Phase BMPs

| ☒ **Check here if no explanations or justifications for Table 6 BMPs are required.** | | |
|---|---|---|
| **Justifications for Table 6 Temporary Construction Phase BMPs**<br>• **Required Justifications**: Justify all construction activity types for which NO BMPs were selected.<br>• **If Requested**: Justify why specific individual BMPs were not selected.<br>• **Additional Explanation**: Describe any proposed features and/or BMPs not listed in Table 6. | | |
| **Activity Type / BMP** | | **Explanation** |
| Activity Type | Activity Type | Explanation |
| BMP | BMP | |
| Activity Type | Activity Type | Explanation |
| BMP | BMP | |
| Activity Type | Activity Type | Explanation |
| BMP | BMP | |
| Activity Type | Activity Type | Explanation |
| BMP | BMP | |
| Activity Type | Activity Type | Explanation |
| BMP | BMP | |
| Activity Type | Activity Type | Explanation |
| BMP | BMP | |
| Activity Type | Activity Type | Explanation |
| BMP | BMP | |

County of San Diego
Stormwater Quality Management Plan (SWQMP)
***Attachment 1: Storm Water Intake Form for All Permit Applications***

This form establishes Stormwater Quality Management Plan (SWQMP) requirements for Development Projects per Sections 67.809 and 67.811 of the County of San Diego Watershed Protection Ordinance (WPO). See ***Storm Water Intake Form Instructions*** for additional guidance and explanation of terms.

| **Part 1. Project Information** | |
|---|---|
| Project Name: | OCEAN BREEZE RANCH |
| Record ID (Permit) No(s): | PDS2020-LDGRMJ-30295 |
| Assessor's Parcel No(s): | SEE ATTACHED |
| Street Address (or Intersection): | 5820 WEST LILAC ROAD |
| City, State, Zip: | BONSALL, CA 92003 |

| **Part 2. Applicant / Project Proponent Information** | |
|---|---|
| Name: | OCEAN BREEZE RANCH, LLC, ATTN JAMES CONRAD |
| Company: | |
| Street Address: | 1550 SOUTH COAST HIGHWAY, SUITE 201 |
| City, State, Zip: | LAGUNA BEACH, CA 92651 |
| Phone Number | 949-497-0200 |
| Email: | jconradarc@gmail.com |

**Part 3. Required Information for All Development Projects**

| Ⓐ | **1. Existing (pre-development) impervious surfaces (ft²)** | **2. Created or replaced impervious surfaces (ft²)** | **3. Total disturbed area (acres or ft²)** |
|---|---|---|---|
| | 508, 274 SF | 3,178,341 SF | 6,415,000 SF |

| Ⓑ | | |
|---|---|---|
| ☒ Check here and provide a WDID# if this project is subject to the California Construction General Permit (Order No. 2009-0009-DWQ)[1] | **WDID # (if issued)** | WDID will be obtained prior to approval |

| *For County Use Only* | Reviewed By: | Review Date: |
|---|---|---|
| ☐ Standard SWQMP | ☐ PDP SWQMP | ☐ Green Streets PDP Exemption SWQMP |

[1] Available at: https://www.waterboards.ca.gov/water_issues/programs/stormwater/construction.html

## Part 4. Priority Classification & SWQMP Form Selection

| (A) *If your project is the following … (select one)* | (B) *You must complete …* |
|---|---|
| ☐ **Standard Project**<br>☐ a. Project is East of the Pacific/Salton Sea Divide<br>☐ b. None of the PDP criteria below applies | → **Standard *SWQMP Form*** |
| ☒ **Priority Development Project (PDP)**<br>☐ 1. Project is part of an existing PDP, OR<br>☒ 2. Project does any of the following:<br>☒ a. Creates or replaces a total of 10,000 ft² or more of impervious surface<br>☒ b. Creates or replaces a combined total of 5,000 ft² or more of impervious surface within one or more of the following uses: (1) parking lots; (2) streets, roads, highways, freeways, and/or driveways; (3) restaurants; and (4) hillsides<br>☐ c. Creates or replaces a combined total of 5,000 ft² or more of impervious surface within one or more of the following uses: (1) automotive repair shops; and (2) retail gasoline outlets<br>☒ d. Discharges directly to an Environmentally Sensitive Area (ESA) AND creates or replaces 2,500 ft² or more of impervious surface<br>☒ e. Disturbs one or more acres of land (43,560 ft²) and is expected to generate pollutants post-construction<br>☐ f. Is a redevelopment project that creates or replaces 5,000 ft² or more of impervious surface on a site already having at least 10,000 ft² of impervious surface | → **PDP *SWQMP Form*** |
| ☐ **Green Streets PDP Exemption**[2] | → **Green *Streets PDP Exemption SWQMP Form*** |

## Part 5. Applicant Signature

*I have reviewed the information in this form, and it is true and correct to the best of my knowledge.*

Applicant / Project Proponent Signature: [signature] Date: 9/25/20

- ***Upon completion*** *submit this form to the County.*
- ***If requested****, attach supporting documentation to justify selections made or exemptions claimed.*
- ***If this is a PDP that is part of a larger existing PDP****, you will be required to attach a copy of the existing SWQMP to the newer SWQMP submittal.*

[2] ***Green Streets PDP Exemption Projects*** are those claiming exemption from PDP classification per WPO Section 67.811(b)(2) because they consist exclusively of *either* 1) development of new sidewalks, bike lanes, and/or trails; *or* 2) improvements to existing roads, sidewalks, bike lanes, and/or trails.

# OCEAN BREEZE RANCH

Assessors Parcel Numbers

125-080-25
125-080-26
125-131-57
127-191-21
127-191-22

## 2.0 General Requirements

- Attachment 2 consolidates exhibits and plans required for the entire project.
- Complete the table below to indicate which sub-attachments are included with the submittal. Sub-attachments that are not applicable can be excluded from the submittal.
- Unless otherwise stated, features and BMPs identified and described in each corresponding Attachment (6 through 9) must be shown on applicable DMA Exhibits and construction plans submitted for the project.

| Sub-attachments | Requirement |
|---|---|
| ☒ **2.1: DMA Exhibits** | All PDPs |
| ☒ **2.2: Individual Structural BMP DMA Mapbook** | PDPs with structural BMPs |
| ☒ **2.3: Construction Plan Sets** | All projects |

## 2.1 DMA Exhibits

- DMA Exhibits must show all DMAs on the project site. Exhibits must include all applicable features identified in applicable SWQMP attachments.
- Exhibits may be prepared individually for the BMPs associated with each applicable SWQMP Attachment (6, 7, 8, and/or 9) or combined into one or more consolidated exhibits.
- Use this checklist to ensure required information is included on each exhibit (copy as needed).

| **DMA Exhibit ID #:** | **DMA /BMP Exhibits 1-5** | |
|---|---|---|
| **A. Features required for all exhibits** | | |
| **1. Existing Site Features** | | |
| ☒ Underlying hydrologic soil group (A, B, C, D) | ☒ Topography and impervious areas | |
| ☒ Approximate depth to groundwater | ☒ Existing drainage network, directions, and offsite connections | |
| ☒ Natural hydrologic features | | |
| **2. Drainage Management Area (DMA) Information** | | |
| ☒ Proposed drainage network, directions, and offsite connections | ☒ DMA boundaries, ID numbers, areas, and type (structural BMP, de minimis, etc.) | |
| **3. Proposed Site Changes, Features, and BMPs** | | |
| ☒ Proposed demolition and grading | ☒ Construction BMPs[2] | |
| ☒ Group 1, 2, and 3 Features[1] | ☒ Baseline source control BMPs | |
| ☒ Group 4 Features | ☐ Baseline source control BMPs | |
| **B. Proposed Features and BMPs Specific to Individual SWQMP Attachments[3]** | | |
| ☒ Attachment 6 | ☒ SSD-BMP impervious dispersion areas<br>☐ SSD-BMP tree wells | |
| ☒ Attachment 7 | ☒ Structural pollutant control BMPs | |
| ☒ Attachment 8 | ☒ Structural hydromodification management BMPs<br>☒ Point(s) of Compliance (POC) for hydromodification management<br>☒ Proposed drainage boundary and drainage area to each POC | |
| ☒ Attachment 9 | ☐ Onsite CCSYAs | ☒ Bypass of onsite CCSYAs<br>☒ Bypass of upstream offsite CCSYAs |

[1] Group 1-4 features and baseline BMPs from PDP SWQMP Tables 2 and 3.
[2] Minimum Construction Stormwater BMPs from PDP SWQMP Table 7.
[3] Identify the location, ID numbers, type, and size/detail of BMPs.

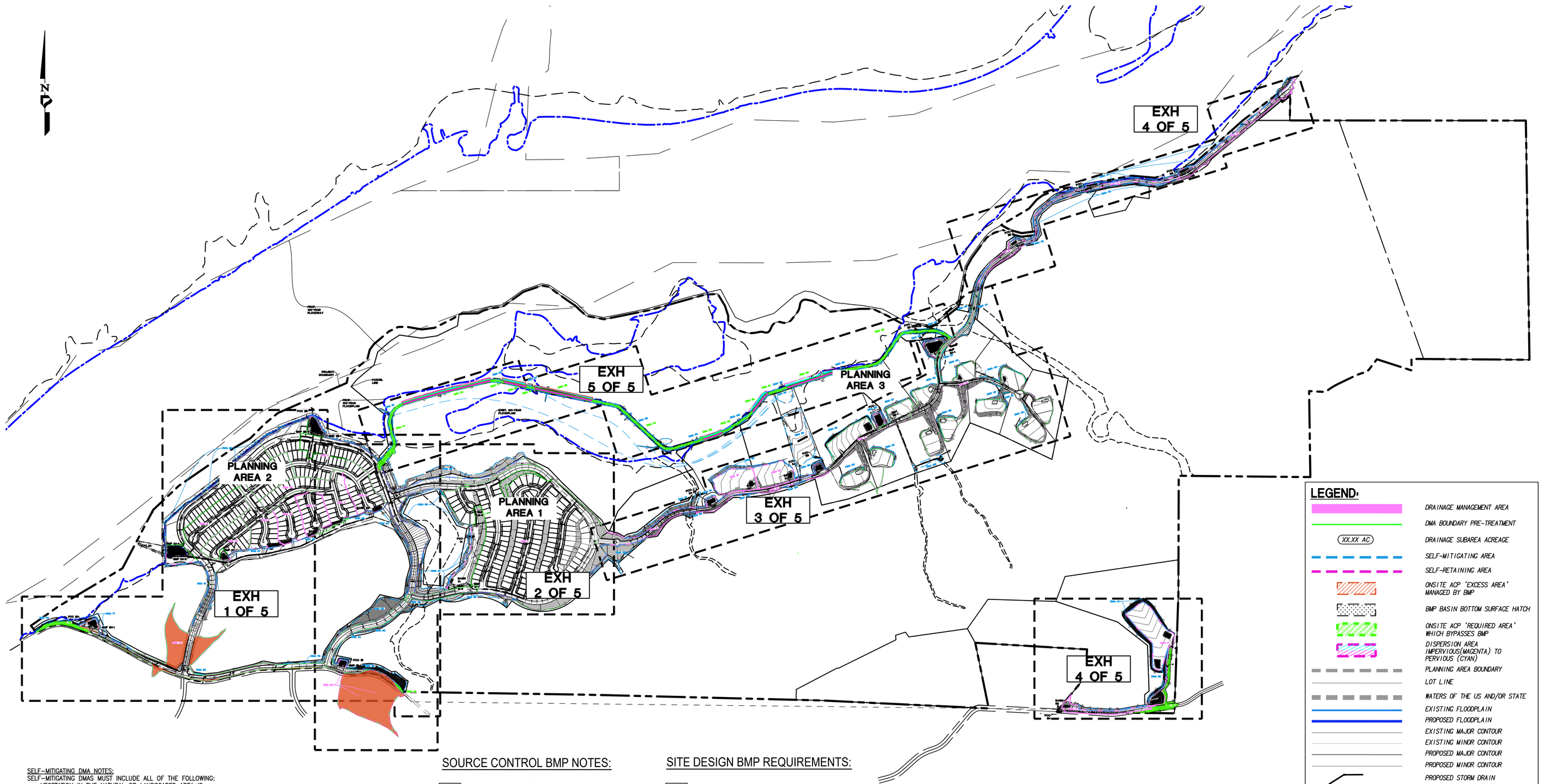


SELF-MITIGATING DMA NOTES:

SELF-MITIGATING DMAS MUST INCLUDE ALL OF THE FOLLOWING:

- VEGETATION IN THE NATURAL OR LANDSCAPED AREA IS NATIVE AND/OR NON-NATIVE/NON-INVASIVE DROUGHT TOLERANT SPECIES THAT DO NOT REQUIRE REGULAR APPLICATION OF FERTILIZERS AND PESTICIDES.
- SOILS ARE UNDISTURBED NATIVE TOPSOIL, OR DISTURBED SOILS THAT HAVE BEEN AMENDED AND AERATED TO PROMOTE WATER RETENTION CHARACTERISTICS EQUIVALENT TO UNDISTURBED NATIVE TOPSOIL.
- THE INCIDENTAL IMPERVIOUS AREAS ARE LESS THAN 5 PERCENT OF THE SELF-MITIGATING AREA.
- IMPERVIOUS AREA WITHIN THE SELF-MITIGATED AREA SHOULD NOT BE HYDRAULICALLY CONNECTED TO OTHER IMPERVIOUS AREAS UNLESS IT IS A STORM WATER CONVEYANCE SYSTEM (SUCH AS A BROW DITCH).
- THE SELF-MITIGATING AREA IS HYDRAULICALLY SEPARATE FROM DMAS THAT CONTAIN PERMANENT STORM WATER POLLUTANT CONTROL BMPS.

## SOURCE CONTROL BMP NOTES:

SC-A *OVERHEAD COVERING (ROOFTOPS, ETC.)*

- **TRASH AND REFUSE STORAGE TO BE DETERMINED IN PARK AREAS**

SC-C *WIND PROTECTION (SCREENS, ETC.)*

- **WIND PROTECTION OF TRASH AND REFUSE STORAGE TO BE DETERMINED IN PARK AREAS**

SC-F *STORM DRAIN SIGNAGE*

- **STENCILING AT ALL MAJOR STORM DRAIN INLETS**

## SITE DESIGN BMP REQUIREMENTS:

SD-B *DIRECT RUNOFF TO PERVIOUS AREAS*

- **THROUGHOUT PROJECT SITE, WITH MULTIPLE DISPERSION AREAS IN EQUESTRIAN AREA**

SD-G *CONSERVE NATURAL FEATURES*

- **THROUGHOUT PROJECT SITE, INCLUDING SLOPES AND NEAR WATERCOURSES**

SD-H *PROVIDE BUFFERS AROUND WATERBODIES*

- **PROVIDED NEAR BIOLOGICAL SENSITIVE HABITATS**

SD-I *CONSTRUCT SURFACES FROM PERMEABLE MATERIALS*

- **STABILIZED DG PATHWAYS PROVIDED ONSITE**

SD-K *SUSTAINABLE LANDSCAPE*

- **LANDSCAPE THROUGHOUT SITE, WITH AREAS OF DROUGHT-TOLERANT SPECIES**

## LEGEND:

- DRAINAGE MANAGEMENT AREA
- DMA BOUNDARY PRE-TREATMENT
- XX.XX AC — DRAINAGE SUBAREA ACREAGE
- SELF-MITIGATING AREA
- SELF-RETAINING AREA
- ONSITE ACP 'EXCESS AREA' MANAGED BY BMP
- BMP BASIN BOTTOM SURFACE HATCH
- ONSITE ACP 'REQUIRED AREA' WHICH BYPASSES BMP
- DISPERSION AREA IMPERVIOUS(MAGENTA) TO PERVIOUS (CYAN)
- PLANNING AREA BOUNDARY
- LOT LINE
- WATERS OF THE US AND/OR STATE
- EXISTING FLOODPLAIN
- PROPOSED FLOODPLAIN
- EXISTING MAJOR CONTOUR
- EXISTING MINOR CONTOUR
- PROPOSED MAJOR CONTOUR
- PROPOSED MINOR CONTOUR
- PROPOSED STORM DRAIN
- 100' LIMITED BLDG ZONE BUFFER / 100' BIO BUFFER ZONE — BIOLOGICAL SENSITIVE HABITATS
- SOIL TYPE A
- SOIL TYPE B
- SOIL TYPE C (NO HATCH)
- SOIL TYPE D

| | |
|---|---|
| SCALE: | 1"=500' |
| JOB #: | 4192.10 |
| CREATED: | 07/04/23 |

PREPARED BY:

PROJECT DESIGN CONSULTANTS
Planning | Landscape Architecture | Engineering | Survey
701 B Street, Suite 800
San Diego, CA 92101
619.235.6471 Tel
619.234.0349 Fax

**COUNTY OF SAN DIEGO**

**OCEAN BREEZE RANCH**

***DRAINAGE MANAGEMENT AREA AND BMP EXHIBIT KEYMAP***

File Name \\Ca-sand-gfe-vm\fastdata\TALONFAST_CORE\TALONFAST-SRV\acquisitions\CA-SAND-PD\Projects\4192.10\Engr\Reports\SWQMP-FE\ATTACHMENTS\A2- DMA EXHIBITS & CONST. PLAN SHEETS\DMA EXH.dwg, Date Plotted Last 11/7/2024 10:25:56 AM

## BMP SUMMARY TABLE

| DMA ID | POC ID | DMA TYPE | DMA SIZE (AC.) | BMP ID | BMP FOOTPRINT (SF) | BMP TYPE | MAINTENANCE CATEGORY |
|---|---|---|---|---|---|---|---|
| 2 | 2A | DMA NOT TO BMP | 19.37 | BASIN 2A | 16,820 | LINED BIOFILTRATION (SF-1) | 2 |
| 2A-1 | 2A | DMA NOT TO BMP | 11.21 | 2A-1 | N/A | PRETREATMENT SLIDEOUT, KSBB-810 | 2 |
| 2A-2 | 2A | DMA NOT TO BMP | 6.82 | 2A-2 | N/A | PRETREATMENT SLIDEOUT, KSBB-612 | 2 |
| 3 | 2B | DMA NOT TO BMP | 18.54 | BASIN 2B | 14,551 | LINED BIOFILTRATION (SF-1) | 2 |
| 2B-1 | 2B | DMA NOT TO BMP | 11.70 | 2B-1 | N/A | PRETREATMENT SLIDEOUT, KSBB-612 | 2 |
| 2B-2 | 2B | DMA NOT TO BMP | 6.12 | 2B-2 | N/A | PRETREATMENT SLIDEOUT, KSBB-612 | 2 |
| 44,B | 2A | DMA NOT TO BMP | 5.90 | BASIN 2C | 5,197 | LINED BIOFILTRATION (SF-1) | 2 |
| 2C-1 | 2A | DMA NOT TO BMP | 5.65 | 2C-1 | N/A | PRETREATMENT SLIDEOUT, KSBB-612 | 2 |
| 5 | 2A | DMA NOT TO BMP | 4.13 | BASIN 2D | 2,780 | LINED BIOFILTRATION (SF-1) | 2 |
| 18 | 2H | DMA NOT TO BMP | 8.25 | BASIN 2H | 5,981 | LINED BIOFILTRATION (SF-1) | 2 |
| 2H-1 | 2H | DMA NOT TO BMP | 7.91 | 2H-1 | N/A | PRETREATMENT SLIDEOUT, KSBB-612 | 2 |
| 16 | 2A | DMA NOT TO BMP | 3.28 | BASIN 2I | 2,029 | LINED BIOFILTRATION (SF-1) | 2 |
| 8 | 2C | DMA NOT TO BMP | 3.66 | BASIN 2C | 2,344 | LINED BIOFILTRATION (SF-1) | 2 |
| 6 | 2A | DMA NOT TO BMP | 2.91 | BASIN 2E | 2,435 | LINED BIOFILTRATION (SF-1) | 2 |
| 7 | 2A | DMA NOT TO BMP | 3.73 | BASIN 2F | 2,143 | LINED BIOFILTRATION (SF-1) | 2 |

NOTE: MOST HILLSIDE DRAINAGE TO BE BYPASSED AWAY FROM POLLUTANT CONTROL BMPS. MOST OF THE DMAS THAT ARE NOT BYPASSED ARE LOW-RISK AND MOST AREAS WILL NOT COMINGLE WITH DMAS TO RUNOFF FOR POLLUTANT TREATMENT.

*SELF-MITIGATING AREAS PER THIS SHEET ARE AS FOLLOWS: 23-25, 54-62 & 69-70. REFERENCE ATTACHMENT 6.1.1F SWQMP FOR SUMMARY TABLE.

## SECTION 2A-2A- BMP 2A
LINED BIOFILTRATION (PRIVATE)
NOT TO SCALE

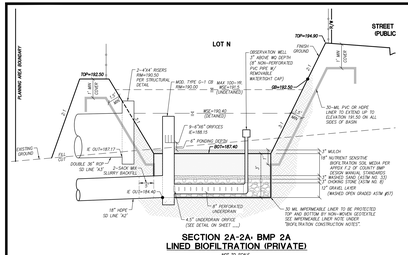


## SECTION 2B-2B- BMP 2B
LINED BIOFILTRATION (PRIVATE)
NOT TO SCALE

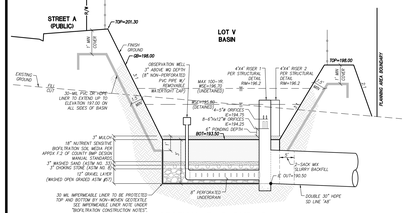


## SECTION 2C-2C- BMP 2C
LINED BIOFILTRATION (PRIVATE)
NOT TO SCALE

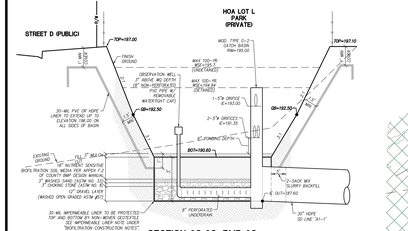


## SECTION 2D-2D- BMP 2D
LINED BIOFILTRATION (PRIVATE)
NOT TO SCALE

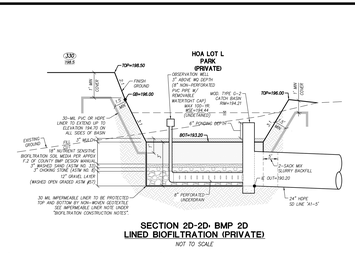


## SECTION 2H-2H- BMP 2H
LINED BIOFILTRATION (PRIVATE)
NOT TO SCALE

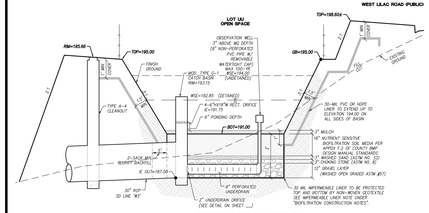


## LEGEND:

- DRAINAGE MANAGEMENT AREA
- DMA BOUNDARY PRE-TREATMENT
- DRAINAGE SUBAREA ACREAGE
- SELF-MITIGATING AREA
- SELF-RETAINING AREA
- ONSITE NOT "EXCESS AREA" MANAGED BY BMP
- BMP BASIN BOTTOM SURFACE HATCH
- ONSITE NOT "REQUIRED AREA" WHICH BYPASSES BMP
- SUSPENSION AREA (WITH DIVERSION(S)) TO PURPOSE STORM PLANNING AREA BOUNDARY
- LOT LINE
- RIVERS OF THE US AND/OR STATE
- EXISTING FLOODPLAIN
- PROPOSED FLOODPLAIN
- EXISTING MAJOR CONTOUR
- EXISTING MINOR CONTOUR
- PROPOSED MAJOR CONTOUR
- PROPOSED MINOR CONTOUR
- PROPOSED STORM DRAIN
- 100' (-M-TO BLDG.)/50' (-N-TO BLDG.) BUFFER ZONE
- BIOLOGICAL SENSITIVE HABITATS
- SOIL TYPE A
- SOIL TYPE B
- SOIL TYPE C (NO HATCH)
- SOIL TYPE D

HYDROLOGIC SOIL GROUP TYPES: A, B, C, & D.
DEPTH TO GROUNDWATER VARIES >50'-14 FT, SEE GEOTECH REPORT.
- PRESERVATION OF NATURAL AREAS
- TRASH STORAGE AREAS AND TRASH CANS WITH LIDS
- MULT STORCH DRAIN
- CONDENSATE DRIP OF AIR CONDITIONING CONDENSATE AND FIRE TEST SPRINKLER DISCHARGE

SEE EXHIBIT IN SWQMP ATTACHMENT 9 FOR POCDA LIMITS

| BMP SUMMARY TABLE | | | | | | | |
|---|---|---|---|---|---|---|---|
| DMA ID | POC ID | DMA TYPE | DMA SIZE (AC.) | BMP ID | BMP FOOTPRINT (SF) | BMP TYPE | MAINTENANCE CATEGORY |
| 1 | 1A | DRAINS TO BMP | 49.32 | BASIN 1A | 45,538 | LINED BIOFILTRATION (BF-1) | 2 |
| 1A-1 | 1A | DRAINS TO BMP | 35.70 | 1A-1 | N/A | PRETREATMENT: OLDCASTLE NSBB-1020 | 2 |
| 1A-2 | 1A | DRAINS TO BMP | 3.60 | 1A-2 | N/A | PRETREATMENT: OLDCASTLE NSBB-48 | 2 |
| 1A-3 | 1B | DRAINS TO BMP | 6.70 | 1A-3 | N/A | PRETREATMENT: OLDCASTLE NSBB-816 | 2 |
| 20 | 1B | DRAINS TO BMP | 7.26 | BASIN 1B | 2,615 | LINED BIOFILTRATION (BF-1) | 2 |
| 1B-1 | 1B | DRAINS TO BMP | 7.05 | 1B-1 | N/A | PRETREATMENT: OLDCASTLE NSBB-48 | 2 |

NOTE: MOST HILLSIDE DRAINAGE TO BE BYPASSED AWAY FROM POLLUTANT CONTROL BMPS. MOST HILLSIDE AREAS ARE CONSIDERED SELF-MITIGATING* AND MOST AREAS WILL NOT COMMINGLE WITH ONSITE RUNOFF FOR POLLUTANT TREATMENT.

*SELF-MITIGATING AREAS PER THIS SHEET ARE AS FOLLOWS: 23-27, 54-56, 59-60 & 72.
REFERENCE ATTACHMENT 6.1 OF SWQMP FOR SUMMARY TABLE.

## LEGEND:

- DRAINAGE MANAGEMENT AREA
- DMA BOUNDARY PRE-TREATMENT
- XX.XX AC — DRAINAGE SUBAREA ACREAGE
- SELF-MITIGATING AREA
- SELF-RETAINING AREA
- ONSITE ACP "EXCESS AREA" MANAGED BY BMP
- BMP BASIN BOTTOM SURFACE HATCH
- ONSITE ACP "REQUIRED AREA" WHICH BYPASSES BMP
- DISPERSION AREA IMPERVIOUS(MAGENTA) TO PERVIOUS (CYAN)
- PLANNING AREA BOUNDARY
- LOT LINE
- WATERS OF THE US AND/OR STATE
- EXISTING FLOODPLAIN
- PROPOSED FLOODPLAIN
- EXISTING MAJOR CONTOUR
- EXISTING MINOR CONTOUR
- PROPOSED MAJOR CONTOUR
- PROPOSED MINOR CONTOUR
- PROPOSED STORM DRAIN
- 100' LIMITED BLDG ZONE BUFFER / 100' BIO BUFFER ZONE — BIOLOGICAL SENSITIVE HABITATS
- SOIL TYPE A
- SOIL TYPE B
- SOIL TYPE C (NO HATCH)
- SOIL TYPE D

HYDROLOGIC SOIL GROUP TYPES: A, B, C, & D
DEPTH TO GROUNDWATER VARIES >10-14 FT, SEE GEOTECH REPORT.
BASELINE BMPs INCLUDE:
–PRESERVATION OF NATURAL AREAS
–TRASH STORAGE AREAS AND TRASH CANS WITH LIDS
–INLET STENCILING
–MANAGEMENT OF AIR CONDITIONING CONDENSATE AND FIRE TEST SPRINKLER DISCHARGES

SEE EXHIBIT IN SWQMP ATTACHMENT 9 FOR PDCSWA LIMITS

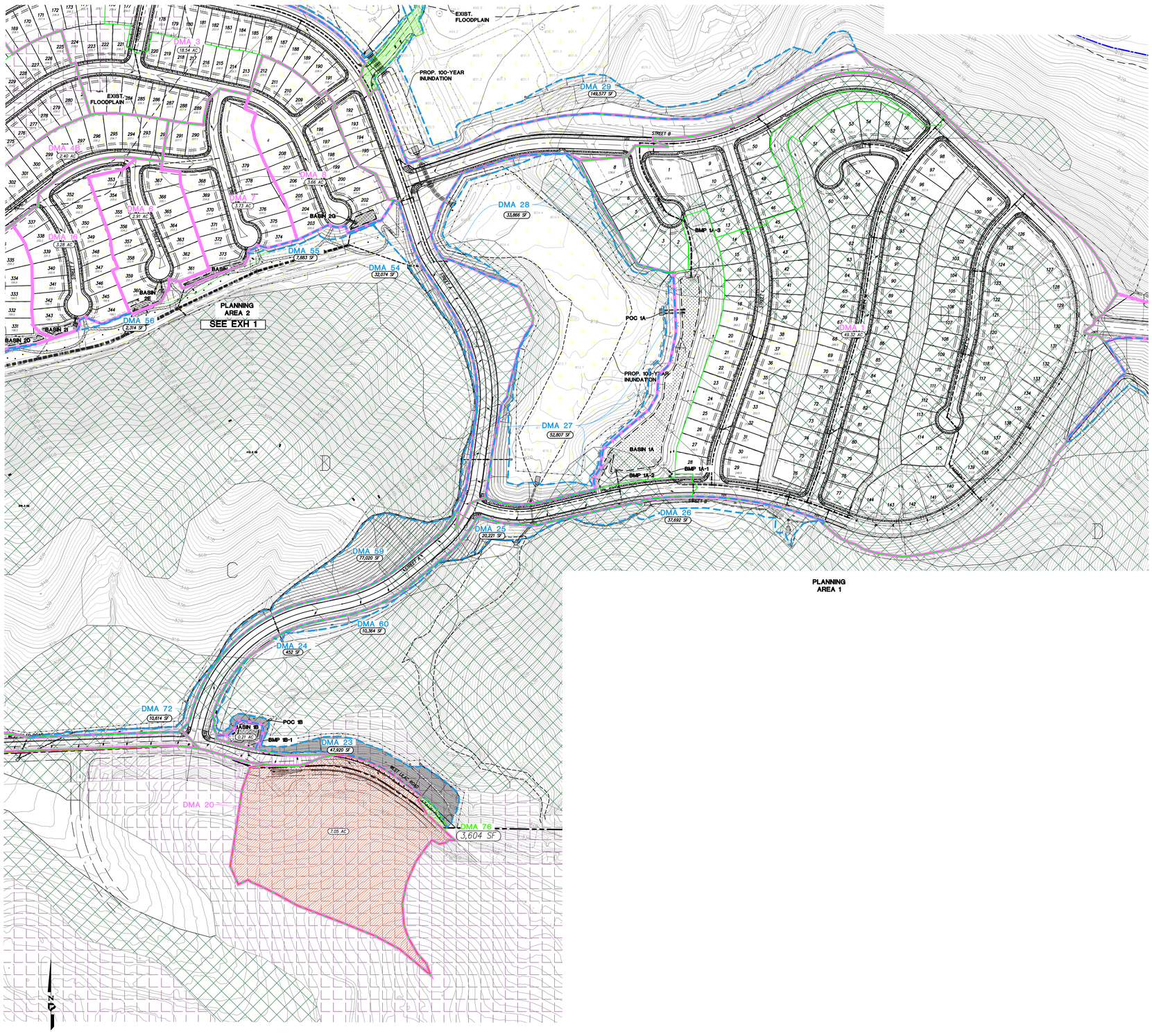


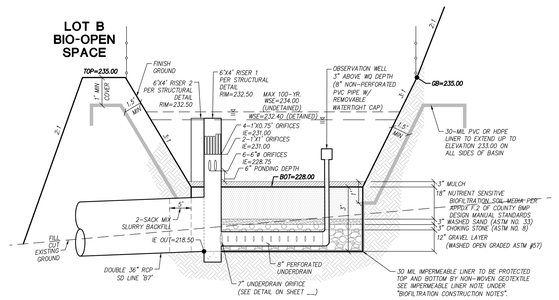


SECTION 1A-1A, BMP 1A
LINED BIOFILTRATION (PRIVATE)
NOT TO SCALE

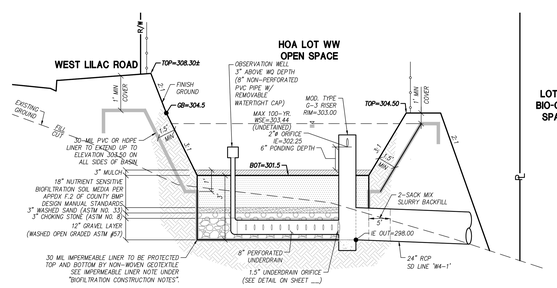


SECTION 1B-1B, BMP 1B
LINED BIOFILTRATION (PRIVATE)
NOT TO SCALE

| | | | |
|---|---|---|---|
| SCALE: | 1"=100' | PREPARED BY: | COUNTY OF SAN DIEGO |
| JOB #: | 4192.10 | PROJECT DESIGN CONSULTANTS Planning \| Landscape Architecture \| Engineering \| Survey — 701 B Street, Suite 800, San Diego, CA 92101, 619.236.6471 Tel, 619.234.0349 Fax | OCEAN BREEZE RANCH |
| CREATED: | 08/07/20 | | DRAINAGE MANAGEMENT AREA AND BMP EXHIBIT EXHIBIT 2 OF 5 |

File Name: \\Ca-sand-gfe-vn\lostdata\TALONFAST_CORE\TALONFAST-SRV\acquisitions\CA-SAND-FD\Projects\4192.10\Engr\Reports\SWQMP-FE\ATTACHMENTS\A2- DMA EXHIBITS & CONST. PLAN SHEETS\DMA EXH.dwg, Date Plotted: Last 11/7/2024 10:26:54 AM

**LEGEND:**

- DRAINAGE MANAGEMENT AREA
- DMA BOUNDARY PRE-TREATMENT
- XX.XX AC — DRAINAGE SUBAREA ACREAGE
- SELF-MITIGATING AREA
- SELF-RETAINING AREA
- ONSITE ACP "EXCESS AREA" MANAGED BY BMP
- BMP BASIN BOTTOM SURFACE HATCH
- ONSITE ACP "REQUIRED AREA" WHICH BYPASSES BMP
- DISPERSION AREA (IMPERVIOUS(MAGENTA) TO PERVIOUS (CYAN))
- PLANNING AREA BOUNDARY
- LOT LINE
- WATERS OF THE US AND/OR STATE
- EXISTING FLOODPLAIN
- PROPOSED FLOODPLAIN
- EXISTING MAJOR CONTOUR
- EXISTING MINOR CONTOUR
- PROPOSED MAJOR CONTOUR
- PROPOSED MINOR CONTOUR
- PROPOSED STORM DRAIN
- 100' LIMITED BLDG ZONE BUFFER / 100' BIO BUFFER ZONE — BIOLOGICAL SENSITIVE HABITATS
- SOIL TYPE A
- SOIL TYPE B
- SOIL TYPE C (NO HATCH)
- SOIL TYPE D

**BMP SUMMARY TABLE**

| DMA ID | POC ID | DMA TYPE | DMA SIZE (AC.) | BMP ID | BMP FOOTPRINT (SF) | BMP TYPE | MAINTENANCE CATEGORY |
|---|---|---|---|---|---|---|---|
| 9 | 3A | DRAINS TO BMP | 1.05 | BASIN 3A | 2,422 | LINED BIOFILTRATION (BF-1) | 2 |
| 10 | 3B | DRAINS TO BMP | 1.21 | BASIN 3B | 3,361 | LINED BIOFILTRATION (BF-1) | 2 |
| 11 | 3C | DRAINS TO BMP | 9.52 | BASIN 3C | 7,232 | PARTIAL BIOFILTRATION (PR-1) | 2 |
| 3C-1 | 3C | DRAINS TO BMP | 9.17 | 3C-1 | N/A | PRETREATMENT OLDCASTLE NSBB-612 | 2 |
| 12 | 3D | DRAINS TO BMP | 15.95 | BASIN 3D | 15,325 | LINED BIOFILTRATION (BF-1) | 2 |
| 3D-1 | 3D | DRAINS TO BMP | 15.23 | 3D-1 | N/A | PRETREATMENT OLDCASTLE NSBB-612 | 2 |
| 22 | 3J | DRAINS TO BMP | 2.37 | BASIN 3J | 2,628 | LINED BIOFILTRATION (BF-1) | 1 |
| 19 | 3J | DRAINS TO BMP | 2.52 | BASIN 3K | 2,512 | LINED BIOFILTRATION (BF-1) | 1 |

NOTE: MOST HILLSIDE DRAINAGE TO BE BYPASSED AWAY FROM POLLUTANT CONTROL BMPS. MOST HILLSIDE AREAS ARE CONSIDERED SELF-MITIGATING• AND MOST AREAS WILL NOT COMMINGLE WITH ONSITE RUNOFF FOR POLLUTANT TREATMENT.

•SELF-MITIGATING AREAS PER THIS SHEET ARE AS FOLLOWS: 30-40, 44-46, 48-53, 64-68, 91, 93, 95, 101-104. REFERENCE ATTACHMENT 6.1 OF SWQMP FOR SUMMARY TABLE.

HYDROLOGIC SOIL GROUP TYPES: A, B, C, & D
DEPTH TO GROUNDWATER VARIES ~10'-14' FT, SEE GEOTECH REPORT.
BASELINE BMPs INCLUDE:
-PRESERVATION OF NATURAL AREAS
-TRASH STORAGE AREAS AND TRASH CANS WITH LIDS
-INLET STENCILING
-MANAGEMENT OF AIR CONDITIONING CONDENSATE AND FIRE TEST SPRINKLER DISCHARGES

SEE EXHIBIT IN SWQMP ATTACHMENT 9 FOR PCCSTA LIMITS

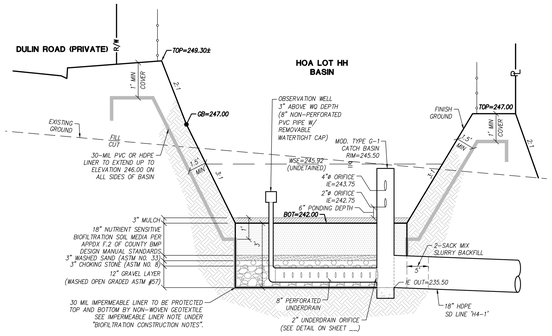


**SECTION 3B-3B, BMP 3B**
**LINED BIOFILTRATION (PRIVATE)**
*NOT TO SCALE*

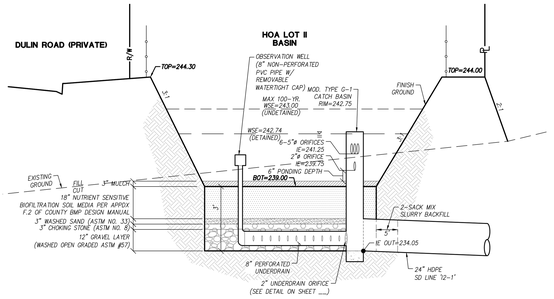


**SECTION 3C-3C, BMP 3C**
**BIOFILTRATION W/ PARTIAL**
**INFILTRATION (PRIVATE)**
*NOT TO SCALE*

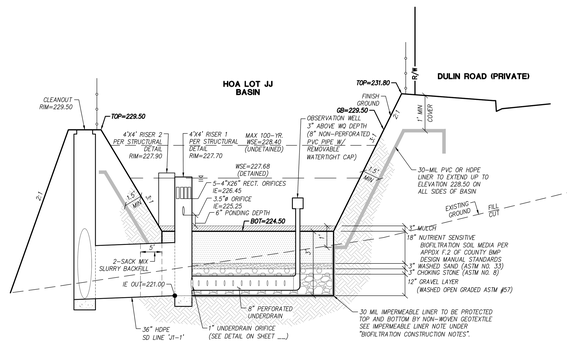


**SECTION 3D-3D, BMP 3D**
**LINED BIOFILTRATION (PRIVATE)**
*NOT TO SCALE*

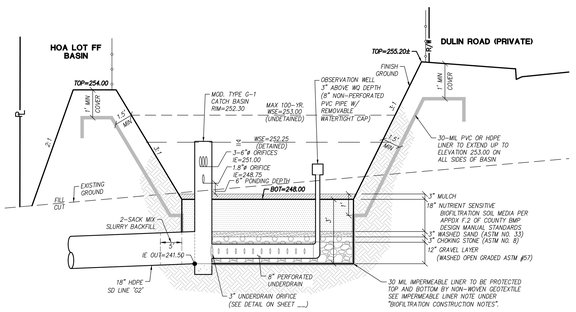


**SECTION 3A-3A, BMP 3A**
**LINED BIOFILTRATION (PRIVATE)**
*NOT TO SCALE*

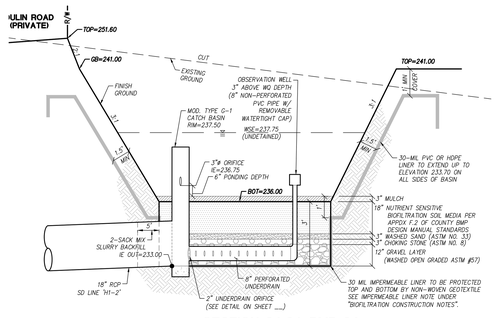


**SECTION 3J-3J, BMP 3J**
**LINED BIOFILTRATION (PRIVATE)**
*NOT TO SCALE*

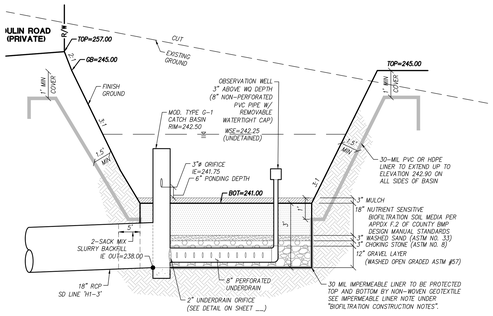


**SECTION 3K-3K, BMP 3K**
**LINED BIOFILTRATION (PRIVATE)**
*NOT TO SCALE*




100 50 0 100 200 300
SCALE: 1"=100'

| | |
|---|---|
| SCALE: | 1"=100' |
| JOB #: | 4192.10 |
| CREATED: | 08/07/20 |

PREPARED BY:
PROJECT DESIGN CONSULTANTS
Planning | Landscape Architecture | Engineering | Survey
701 B Street, Suite 800
San Diego, CA 92101
619.235.6471 Tel
619.234.1349 Fax

**COUNTY OF SAN DIEGO**
**OCEAN BREEZE RANCH**
*DRAINAGE MANAGEMENT AREA AND BMP EXHIBIT*
*EXHIBIT 3 OF 5*

File Name: \\Ca-sand-gfe-vn\fastdata\TALONFAST_CORE\TALONFAST-SRV\acquisitions\CA-SAND-PD\Projects\4192.10\Engr\Reports\SWQMP-FE\ATTACHMENTS\A2- DMA EXHIBITS & CONST. PLAN SHEETS\DMA EXH.dwg, Date Plotted: Last 11/7/2024 10:27:10 AM

## LEGEND:

- DRAINAGE MANAGEMENT AREA
- DMA BOUNDARY PRE-TREATMENT
- (XX.XX AC) DRAINAGE SUBAREA ACREAGE
- SELF-MITIGATING AREA
- SELF-RETAINING AREA
- ONSITE ACP "EXCESS AREA" MANAGED BY BMP
- BMP BASIN BOTTOM SURFACE HATCH
- ONSITE ACP "REQUIRED AREA" WHICH BYPASSES BMP
- DISPERSION AREA (IMPERVIOUS/MAGENTA) TO PERVIOUS (CYAN)
- PLANNING AREA BOUNDARY
- LOT LINE
- WATERS OF THE US AND/OR STATE
- EXISTING FLOODPLAIN
- PROPOSED FLOODPLAIN
- EXISTING MAJOR CONTOUR
- EXISTING MINOR CONTOUR
- PROPOSED MAJOR CONTOUR
- PROPOSED MINOR CONTOUR
- PROPOSED STORM DRAIN
- 100' LIMITED BLDG ZONE BUFFER / 100' BIO BUFFER ZONE
- BIOLOGICAL SENSITIVE HABITATS
- SOIL TYPE A
- SOIL TYPE B
- SOIL TYPE C (NO HATCH)
- SOIL TYPE D

HYDROLOGIC SOIL GROUP TYPES: A, B, C, & D
DEPTH TO GROUNDWATER VARIES ~10-14 FT, SEE GEOTECH REPORT.
BASELINE BMPs INCLUDE:
-PRESERVATION OF NATURAL AREAS
-TRASH STORAGE AREAS AND TRASH CANS WITH LIDS
-INLET STENCILING
-MANAGEMENT OF AIR CONDITIONING CONDENSATE AND FIRE TEST SPRINKLER DISCHARGES

SEE EXHIBIT IN SWQMP ATTACHMENT 9 FOR PCCSYA LIMITS

**BMP SUMMARY TABLE**

| DMA ID | POC ID | DMA TYPE | DMA SIZE (AC.) | BMP ID | BMP FOOTPRINT (SF) | BMP TYPE | MAINTENANCE CATEGORY |
|---|---|---|---|---|---|---|---|
| 21 | 3H | DRAINS TO BMP | 1.17 | BASIN 3H | 1,757 | LINED BIOFILTRATION (BF-1) | 4 |
| 17 | 3H | DRAINS TO BMP | 4.63 | BASIN 3I | 2,992 | LINED BIOFILTRATION (BF-1) | 1 |
| 13 | 3E | DRAINS TO BMP | 1.45 | BASIN 3E | 1,600 | LINED BIOFILTRATION (BF-1) | 2 |
| 14 | 3F | DRAINS TO BMP | 1.46 | BASIN 3F | 1,662 | LINED BIOFILTRATION (BF-1) | 2 |
| 15 | 3G | DRAINS TO BMP | 2.15 | BASIN 3G | 1,852 | LINED BIOFILTRATION (BF-1) | 2 |

NOTE: MOST HILLSIDE DRAINAGE TO BE BYPASSED AWAY FROM POLLUTANT CONTROL BMPS. MOST HILLSIDE AREAS ARE CONSIDERED SELF-MITIGATING AND MOST AREAS WILL NOT COMMINGLE WITH ONSITE RUNOFF FOR POLLUTANT TREATMENT.

*SELF-MITIGATING AREAS PER THIS SHEET ARE AS FOLLOWS: 41-43, 47 & 63. REFERENCE ATTACHMENT 6.1 OF SWQMP FOR SUMMARY TABLE.

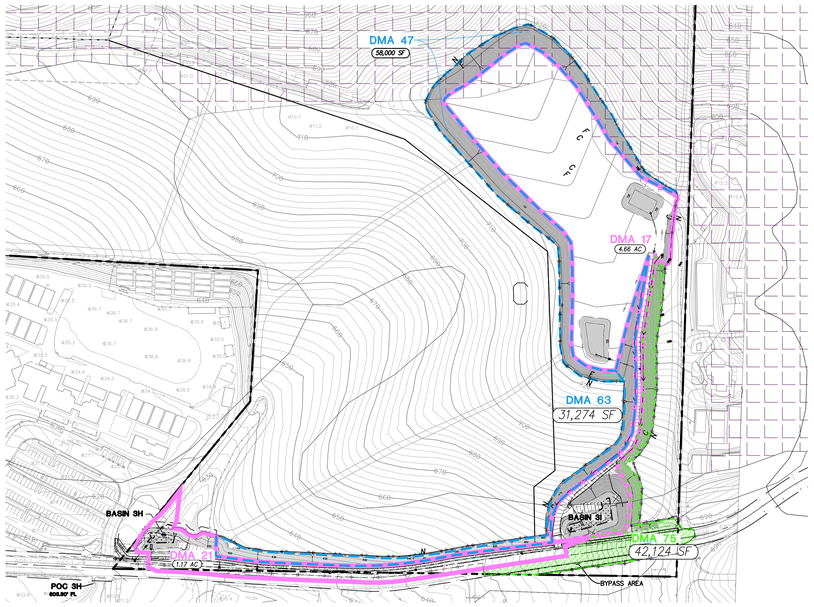





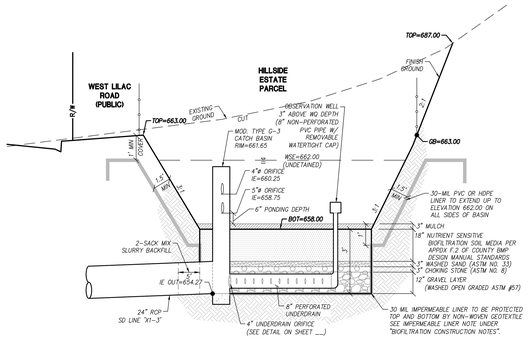


**SECTION 3I-3I, BMP 3I**
**LINED BIOFILTRATION (PRIVATE)**
NOT TO SCALE

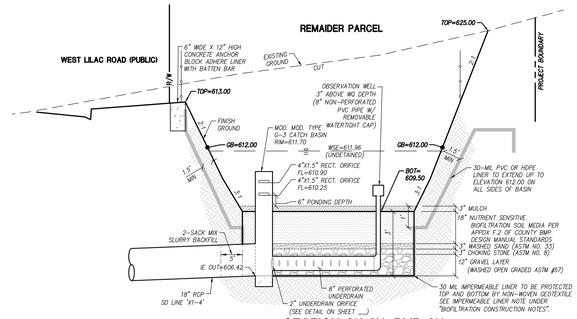


**SECTION 3H-3H, BMP 3H**
**LINED BIOFILTRATION (PRIVATE)**
NOT TO SCALE

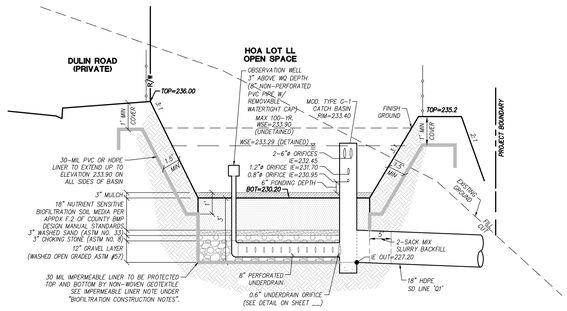


**SECTION 3E-3E, BMP 3E**
**LINED BIOFILTRATION (PRIVATE)**
NOT TO SCALE

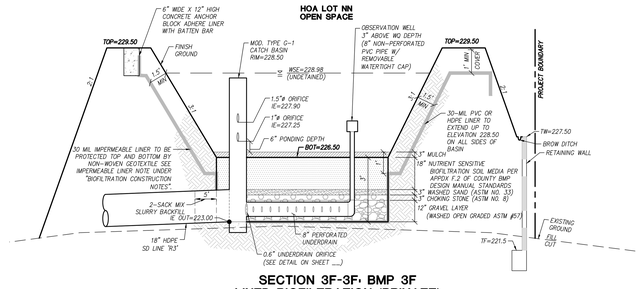


**SECTION 3F-3F, BMP 3F**
**LINED BIOFILTRATION (PRIVATE)**
NOT TO SCALE

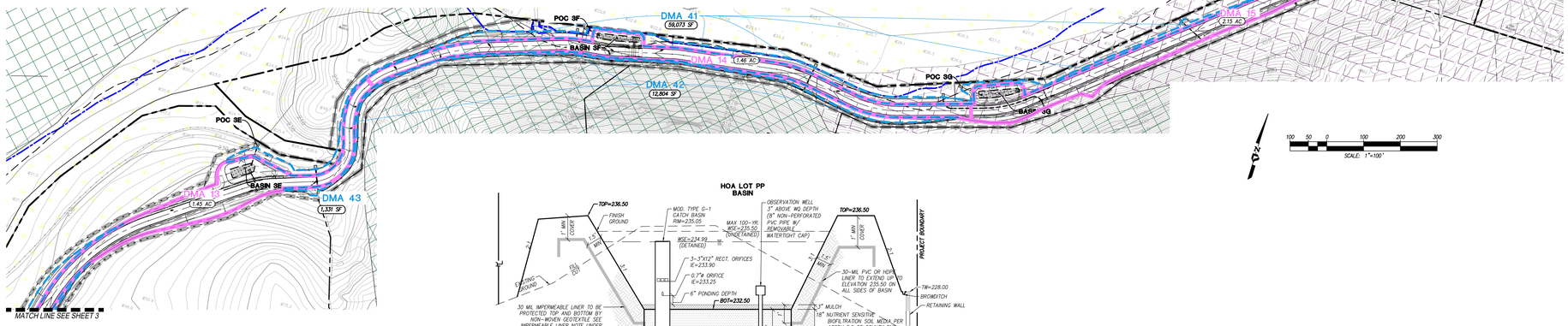








**SECTION 3G-3G, BMP 3G**
**LINED BIOFILTRATION (PRIVATE)**
NOT TO SCALE

| | | | |
|---|---|---|---|
| SCALE: | 1"=100' | PREPARED BY: | COUNTY OF SAN DIEGO |
| JOB #: | 4192.10 | PROJECT DESIGN CONSULTANTS Planning \| Landscape Architecture \| Engineering \| Survey 701 B Street, Suite 800 San Diego, CA 92101 619.235.6471 Tel 619.234.0349 Fax | OCEAN BREEZE RANCH |
| DRAWN: | DB/07/20 | | DRAINAGE MANAGEMENT AREA AND BMP EXHIBIT |
| | | | EXHIBIT 4 OF 5 |

**LEGEND:**

- DRAINAGE MANAGEMENT AREA
- DMA BOUNDARY PRE-TREATMENT
- XX.XX AC — DRAINAGE SUBAREA ACREAGE
- SELF-MITIGATING AREA
- SELF-RETAINING AREA
- ONSITE ACP "EXCESS AREA" MANAGED BY BMP
- BMP BASIN BOTTOM SURFACE HATCH
- ONSITE ACP "REQUIRED AREA" WHICH BYPASSES BMP
- DISPERSION AREA (WITH YOUS MAGENTA) TO PERVIOUS (CYAN)
- PLANNING AREA BOUNDARY
- LOT LINE
- WATERS OF THE US AND/OR STATE
- EXISTING FLOODPLAIN
- PROPOSED FLOODPLAIN
- EXISTING MAJOR CONTOUR
- EXISTING MINOR CONTOUR
- PROPOSED MAJOR CONTOUR
- PROPOSED MINOR CONTOUR
- PROPOSED STORM DRAIN
- 100' LIMITED BLDG ZONE BUFFER / 100' BIO BUFFER ZONE — BIOLOGICAL SENSITIVE HABITATS
- SOIL TYPE A
- SOIL TYPE B
- SOIL TYPE C (NO HATCH)
- SOIL TYPE D

HYDROLOGIC SOIL GROUP TYPES: A, B, C, & D
DEPTH TO GROUNDWATER VARIES ~10-14 FT, SEE GEOTECH REPORT.
BASELINE BMPs INCLUDE:
-PRESERVATION OF NATURAL AREAS
-TRASH STORAGE AREAS AND TRASH CANS WITH LIDS
-INLET STENCILING
-MANAGEMENT OF AIR CONDITIONING CONDENSATE AND FIRE TEST SPRINKLER DISCHARGES

SEE EXHIBIT IN SWQMP ATTACHMENT 9 FOR POCSYA LIMITS

DMA 67 (7,281 SF)
PROP. 100-YEAR FLOODPLAIN
DMA 74 (31,110 SF)
DMA 84 (48,832 SF)
DMA 96 (646 SF)
DMA 77 (3,395 SF)
DMA 97 (559 SF)
DMA 85 (14,099 SF)
DMA 78 (2,086 SF)
EXIST. FLOODPLAIN
DMA 86 (31,707 SF)
DMA 98 (16,771 SF)
DMA 79 (34,584 SF)
MATCH LINE THIS SHEET

DMA 82 (36,080 SF)
POC 3D
DMA 68 (9,071 SF)
DMA 39 (21,483 SF)
SEE EXH 3
DMA 81 (5,763 SF)
DMA 101 (2,085 SF)
DMA 90 (34,561 SF)
PROP. 100-YEAR INUNDATION
DMA 65 (1,599 SF)
DMA 89 (14,928 SF)
DMA 66 (77,910 SF)
DMA 100 (3,174 SF)
DMA 80 (9,690 SF)
DMA 99 (368 SF)
DMA 88 (11,761 SF)
EXIST. FLOODPLAIN
SEE EXH 3
SEE EXH 3
MATCH LINE THIS SHEET

**BMP SUMMARY TABLE**

| DMA ID | POC ID | DMA TYPE | DMA SIZE (SF) | BMP ID | BMP FOOTPRINT (SF) | BMP TYPE | MAINTENANCE CATEGORY |
|---|---|---|---|---|---|---|---|
| 74 | - | ALT. COMPLIANCE AREA | 31,110 | - | - | - | - |
| 77 | - | ALT. COMPLIANCE AREA | 3,395 | - | - | - | - |
| 78 | - | ALT. COMPLIANCE AREA | 2,086 | - | - | - | - |
| 79 | - | ALT. COMPLIANCE AREA | 26,288 | - | - | - | - |
| 80 | - | ALT. COMPLIANCE AREA | 9,690 | - | - | - | - |
| 81 | - | ALT. COMPLIANCE AREA | 5,763 | - | - | - | - |
| 82 | - | ALT. COMPLIANCE AREA | 2,943 | - | - | - | - |
| 83 | - | ALT. COMPLIANCE AREA | 20,993 | - | - | - | - |
| 84 | - | SELF-RETAINING | 48,832 | - | - | - | - |
| 85 | - | SELF-RETAINING | 12,748 | - | - | - | - |
| 86 | - | SELF-RETAINING | 31,707 | - | - | - | - |
| 88 | - | SELF-RETAINING | 11,761 | - | - | - | - |
| 89 | - | SELF-RETAINING | 14,928 | - | - | - | - |
| 90 | - | SELF-RETAINING | 34,561 | - | - | - | - |
| 92 | - | ALT. COMPLIANCE AREA | 1,931 | - | - | - | - |

NOTE: MOST HILLSIDE DRAINAGE TO BE BYPASSED AWAY FROM POLLUTANT CONTROL BMPS. MOST HILLSIDE AREAS ARE CONSIDERED SELF-MITIGATING* AND MOST AREAS WILL NOT COMMINGLE WITH ONSITE RUNOFF FOR POLLUTANT TREATMENT.

*SELF-MITIGATING AREAS PER THIS SHEET ARE AS FOLLOWS: 39, 65-68, & 86-101.
REFERENCE ATTACHMENT 6.1 OF SWQMP FOR SUMMARY TABLE.

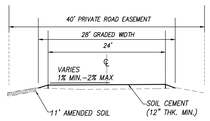


PROPOSED DISPERSION AREA
NTS

N

60 30 0 60 120 180
SCALE: 1"=60'

| | |
|---|---|
| SCALE: | 1"=60' |
| JOB #: | 4192.10 |
| CREATED: | 08/07/20 |

PREPARED BY:
PROJECT DESIGN CONSULTANTS
Planning | Landscape Architecture | Engineering | Survey
701 B Street, Suite 800 San Diego, CA 92101 619.235.6471 Tel 619.234.3349 Fax

COUNTY OF SAN DIEGO
OCEAN BREEZE RANCH
DRAINAGE MANAGEMENT AREA AND BMP EXHIBIT
EXHIBIT 5 OF 5

File Name: \\Ca-sand-gfe-vm\fastdata\TALONFAST_CORE\TALONFAST-SRV\acquisitions\CA-SAND-PD\Projects\4192.10\Engr\Reports\SWQMP-FE\ATTACHMENTS\A2- DMA EXHIBITS & CONST. PLAN SHEETS\DMA EXH.dwg, Date Plotted: Last 11/7/2024 10:28:08 AM

## 2.2 Individual Structural BMP DMA Mapbook

- Use this page as a cover sheet for the Structural DMA Mapbook.
- An individual Structural DMA Mapbook must be submitted for any project site with one or more structural BMPs. One Mapbook is required for each unique subsequent owner with responsibility for maintenance of a Structural BMP. Mapbook exhibits will be incorporated as exhibits in Stormwater Maintenance Agreements (SWMAs) and Maintenance Notifications (MNs). See Attachment 11 for additional information on maintenance agreements. If the Mapbook has been provided for each subsequent owner in Attachment 11, they are not required here.
- Place each map on 8.5"x11" paper.
- Show at a minimum the DMA, Structural BMP, Assessor's parcel boundaries with parcel numbers, and any existing hydrologic features within the DMA.

| | |
|---|---|
| ☐ | All Mapbooks are attached |
| ☒ | All Mapbooks are in Attachment 11 |

## 2.3 Construction Plan Sets

- DMAs, features, and BMPs identified and described in this attachment must also be shown on all applicable construction and landscape plans.
- As applicable, plan sheets must identify:
    - All features and BMPs identified in Sub-attachment 2.1 (DMA Exhibits).
    - The additional information listed below.
- Use this checklist to ensure required information is included on each plan (copy as needed).

| **Plan Type** | **Grading Plans PDS2020-LDGRMJ-30295** |
|---|---|
| **Required Information**[4] | |
| ☒ Structural BMP(s) and Significant Site Design BMPs (if applicable) with ID numbers. | |
| ☒ The grading and drainage design shown on the plans must be consistent with the delineation of DMAs shown on the DMA exhibit. | |
| ☒ Details and specifications for construction of Structural BMP(s) and Significant Site Design BMPs (if applicable). | |
| ☒ Signage indicating the location and boundary of structural BMP(s) as required by County staff. | |
| ☒ How to access the structural BMP(s) to inspect and perform maintenance. | |
| ☒ Features that are provided to facilitate inspection (e.g., observation ports, cleanouts, silt posts, or other features that allow the inspector to view necessary components of the structural BMP and compare to maintenance thresholds). | |
| ☒ Maintenance thresholds specific to the structural BMP(s), with a location-specific frame of reference (e.g., level of accumulated materials that triggers removal of the materials, to be identified based on viewing marks on silt posts or measured with a survey rod with respect to a fixed benchmark within the BMP). | |
| ☒ Recommended equipment to perform maintenance. | |
| ☒ When applicable, necessary special training or certification requirements for inspection and maintenance personnel such as confined space entry or hazardous waste management. | |
| ☒ Include landscaping plan sheets (if available) showing vegetation requirements for vegetated structural BMP(s). | |
| ☒ All BMPs must be fully dimensioned on the plans. | |
| ☒ When proprietary BMPs are used, site-specific cross-section with outflow, inflow, and manufacturer model number must be provided. Photocopies of general brochures are not acceptable. | |
| ☒ Include all source control and site design measures described in the SWQMP. | |
| ☒ Include all construction BMPs described in the SWQMP. | |

[4] For Building Permit Applications, refer to Form PDS 272, https://www.sandiegocounty.gov/content/dam/sdc/pds/docs/pds272.pdf

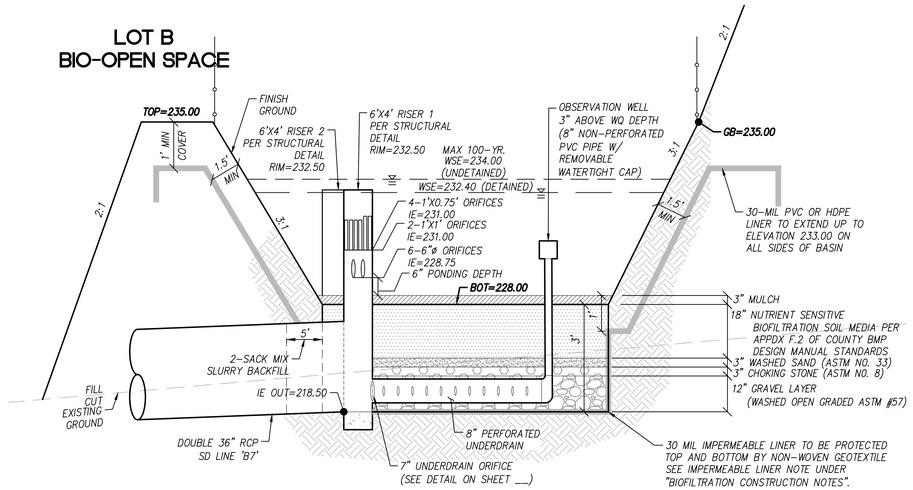


## SECTION 1A-1A: BMP 1A
## LINED BIOFILTRATION (PRIVATE)
NOT TO SCALE

| SITE SPECIFIC DATA | |
|---|---|
| Structure ID | Basin 1A-1 |
| Water Quality Flow Rate (cfs) | 4.22 |
| Peak Flow Rate (cfs) | 142.60 |
| Rim Elevation | 245.60' |
| Top of Vault Elevation | 235.68' |

| Pipe Data | Pipe Size | Pipe Type | Invert Elevation |
|---|---|---|---|
| Inlet | 54" | HDPE | 229.30' |
| Outlet | 54" | RCP | 229.10' |

Notes:

| PERFORMANCE SPECIFICATIONS | |
|---|---|
| Screen System Storage Volume | 197.22 cf |
| Total Sump Volume | 1440.83 cf |
| NJDEP Sediment Storage Volume | 95.00 cf |
| Peak Flow Capacity* | 182.60 cfs |
| Treatment Flow Capacities:* | |
| NJDEP 50% Removal, 75 micron | 15.56 cfs |
| 80% Removal, 150 micron | 45.40 cfs |

*Contact Oldcastle for additional treatment and peak flow capacities.

**ALL PIPE ANGLES TO BE IMMEDIATELY OUTSIDE OF THE STRUCTURE, BY OTHERS.**

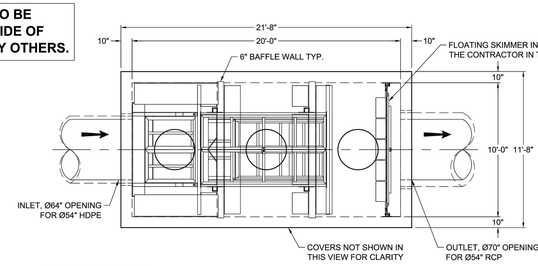


PLAN VIEW

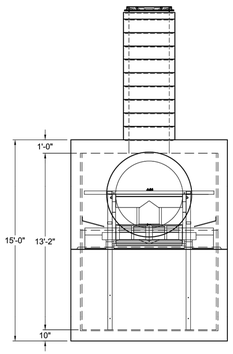


LEFT END VIEW

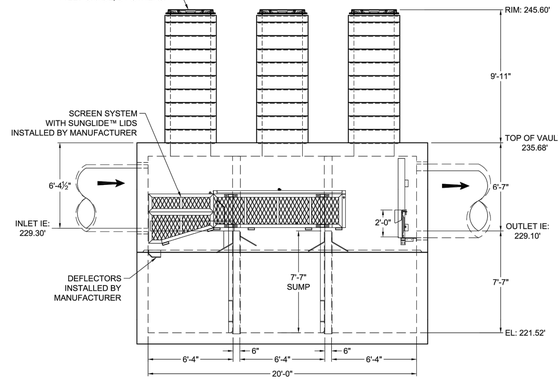


ELEVATION VIEW

THIS PRODUCT IS PROTECTED BY ONE OR MORE OF THE FOLLOWING US PATENT(S): 6,428,692; 7,270,747; 7,981,283; 8,142,666; 8,366,923; 8,491,797; 7,846,327; 8,034,236; RELATED FOREIGN PATENTS, OR OTHER PATENTS PENDING.

NOTES:

1. DESIGN LOADINGS:
   A. AASHTO HS-20-44 (WITH IMPACT)
   B. DESIGN SOIL COVER: 10'-0" MAXIMUM
   C. ASSUMED WATER TABLE: BELOW BASE OF PRECAST (ENGINEER-OF-RECORD TO CONFIRM SITE WATER TABLE ELEVATION)
   D. LATERAL EARTH PRESSURE: 45 PCF (DRAINED)
   E. LATERAL LIVE LOAD SURCHARGE: 80 PSF (APPLIED TO 8'-0" BELOW GRADE)
   F. NO LATERAL SURCHARGE FROM ADJACENT BUILDINGS, WALLS, PIERS, OR FOUNDATIONS.
2. CONCRETE 28-DAY MINIMUM COMPRESSIVE STRENGTH: 5,000 PSI MINIMUM.
3. REINFORCING: REBAR, ASTM A615/A706, GRADE 60
4. CEMENT: ASTM C150
5. REQ'D ALLOWABLE SOIL BEARING CAPACITY: 2,500 PSF
6. REFERENCE STANDARD:
   A. ASTM C890
   B. ASTM C913
   C. ACI 318-14
7. THIS STRUCTURE IS DESIGNED TO THE PARAMETERS NOTED HEREIN. ENGINEER-OF-RECORD SHALL VERIFY THAT NOTED PARAMETERS MEET OR EXCEED PROJECT REQUIREMENTS. IF DESIGN PARAMETERS ARE INCORRECT, REVIEWING ENGINEER/AUTHORITY SHALL NOTIFY OLDCASTLE INFRASTRUCTURE UPON REVIEW OF THIS SUBMITTAL.
8. OVERSIZED HOLES TO ACCOMMODATE SPECIFIC PIPE TYPE MUST BE CONCENTRIC TO PIPE ID. AFTER PIPES ARE INSTALLED, ALL ANNULAR SPACES SHALL BE FILLED WITH A MINIMUM OF 3,000 PSI CONCRETE FOR FULL THICKNESS OF PRECAST WALLS. PIPES ARE TO BE FLUSH WITH THE INSIDE SURFACE OF THE CONCRETE STRUCTURE.
9. CONTRACTOR RESPONSIBLE TO VERIFY ALL SIZES, LOCATIONS, AND ELEVATIONS OF OPENINGS.
10. CONTRACTOR RESPONSIBLE TO ENSURE ADEQUATE BEARING SURFACE IS PROVIDED (I.E. COMPACTED AND LEVEL PER PROJECT SPECIFICATIONS).
11. SECTION HEIGHTS, SLAB/WALL THICKNESSES, AND KEYWAYS ARE SUBJECT TO CHANGE AS REQUIRED FOR SITE REQUIREMENTS AND/OR DUE TO PRODUCT AVAILABILITY AND PRODUCTION FACILITY CONSTRAINTS.
12. FOR SITE SPECIFIC DRAWINGS WITH DETAILED STRUCTURE DIMENSIONS AND WEIGHTS, PLEASE CONTACT OLDCASTLE INFRASTRUCTURE.
13. MAXIMUM PICK WEIGHT: 79,400 LBS. (* COMBINED WEIGHT INCLUDES BAFFLE WALLS AND PRODUCT INTERNALS.)
14. INTERNALS SHALL CONSIST OF A FLOATING SKIMMER, FLOW DEFLECTORS, ELEVATED CENTRAL SCREEN SYSTEM AND SLIDING LIDS. THESE COMPONENTS EFFECTIVELY REDUCE HEAD LOSS, INCREASE POLLUTANT REMOVAL AND SIMPLIFY MAINTENANCE.

- PRELIMINARY -
NOT FOR CONSTRUCTION

Oldcastle Infrastructure
A CRH COMPANY
Ph: 800.579.8818 | www.oldcastleinfrastructure.com/contactus

THIS DOCUMENT IS THE PROPERTY OF OLDCASTLE INFRASTRUCTURE, INC. AND IS NOT TO BE USED FOR ANY PURPOSE OTHER THAN THAT FOR WHICH IT IS SHALL NOT BE USED IN ANY WAY INJURIOUS TO THE INTERESTS OF, NOR WITHOUT THE WRITTEN PERMISSION OF OLDCASTLE INFRASTRUCTURE, INC. COPYRIGHT © 2024 OLDCASTLE INFRASTRUCTURE, INC. ALL RIGHTS RESERVED.

Nutrient Separating Baffle Box®
NSBB-1020

| CUSTOMER | | | | | |
|---|---|---|---|---|---|
| Bowman | | | | | |
| PROJECT NAME | | | | | |
| Ocean Breeze Ranch (OBR) - Bonsall,CA | | | | | |
| DATE | MFG PLANT | DRAWN BY | DESIGNED BY | CHECKED BY | QA BY |
| 6/5/24 | 070-FO | PPS | HMF | - | - |
| DRAWING NAME | | | REVISION | SHEET | |
| 21-603205-NSBB-1020_Basin 1A-1 | | | REV DATE 10/28/24 | 1 OF 1 | |

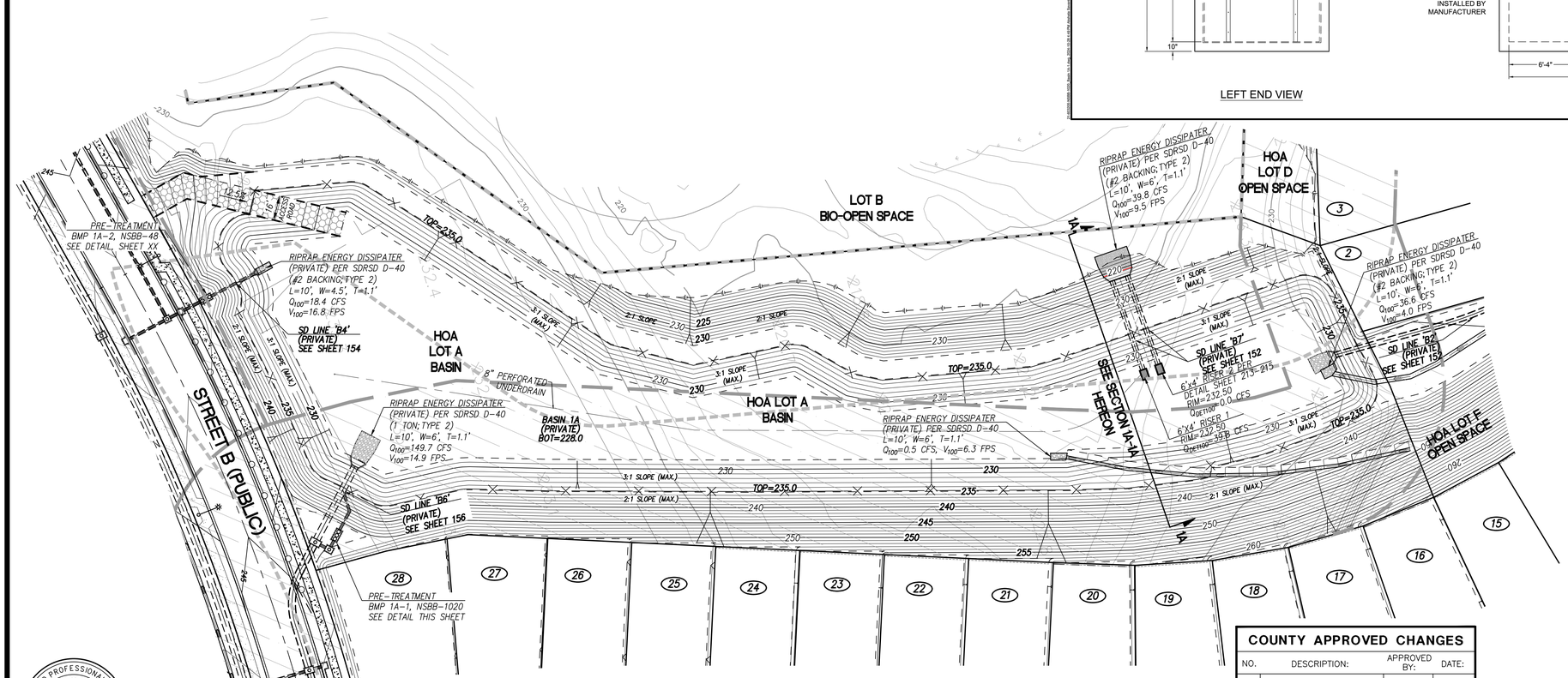


## BASIN 1A
## LINED BIOFILTRATION (PRIVATE)
SCALE: 1"=40'

40 20 0 40 80 120
SCALE: 1"=40'

GREGORY M. SHIELDS, R.C.E. 42951 — DATE REGISTRATION EXPIRES 3-31-26

| DESIGNED BY: | PM REVIEW: | SURVEY REVIEW: |
|---|---|---|
| MC/LG | RR/IM | SS |

REGISTERED PROFESSIONAL ENGINEER — GREGORY M. SHIELDS — No. 42951 — Exp. 03-31-26 — CIVIL — STATE OF CALIFORNIA

Bowman

Bowman Consulting Group Ltd
701 B Street, Suite 800
San Diego, CA 92101
Phone: 619.235.6471
Bowman.com
© 2024 Bowman Consulting Group Ltd

| COUNTY APPROVED CHANGES | | | |
|---|---|---|---|
| NO. | DESCRIPTION: | APPROVED BY: | DATE: |
| | | | |

RECORD PLAN

BY: _____ DATE: _____
NAME
R.C.E. _____
EXPIRES: _____

BENCH MARK

DESCRIPTION: FOUND 2" BRASS DISK MARKED "CALIF." "DEPT OF TRANSPORTATION" "SDGPS 03" "1991" "NE 15/76" & "1980"
LOCATION: BRASS DISK IN CONCRETE SIDEWALK ON NE CORNER BRIDGE ABUTMENT, 2.5' FROM FACE OF CURB & 2.5' FROM EXPANSION JOINT. BRIDGE IS FOR HWY 76 AND SPANS INTERSTATE I-15.
RECORD FROM: ROS 21563
ELEVATION: 308.26
DATUM: NAVD 88

PRIVATE CONTRACT

| SHEET | COUNTY OF SAN DIEGO | SHEETS |
|---|---|---|
| 193 | DEPARTMENT OF PUBLIC WORKS | 243 |

BMP DETAILS FOR:
OCEAN BREEZE RANCH-TM 5615

CALIFORNIA COORDINATE INDEX 410-1701,410-1707,410-1713 414-1703,414-1707,414-1719 418-1713,418-1719

APPROVED FOR: WILLIAM P. MORGAN, COUNTY ENGINEER
BY: _____ DATE: _____

ENGINEER OF WORK
DATE: _____
GREGORY SHIELDS, RCE NO. C42951, EXP. 03-31-26

PDS2020-LDGRMJ-30295
GRADING PERMIT NO:

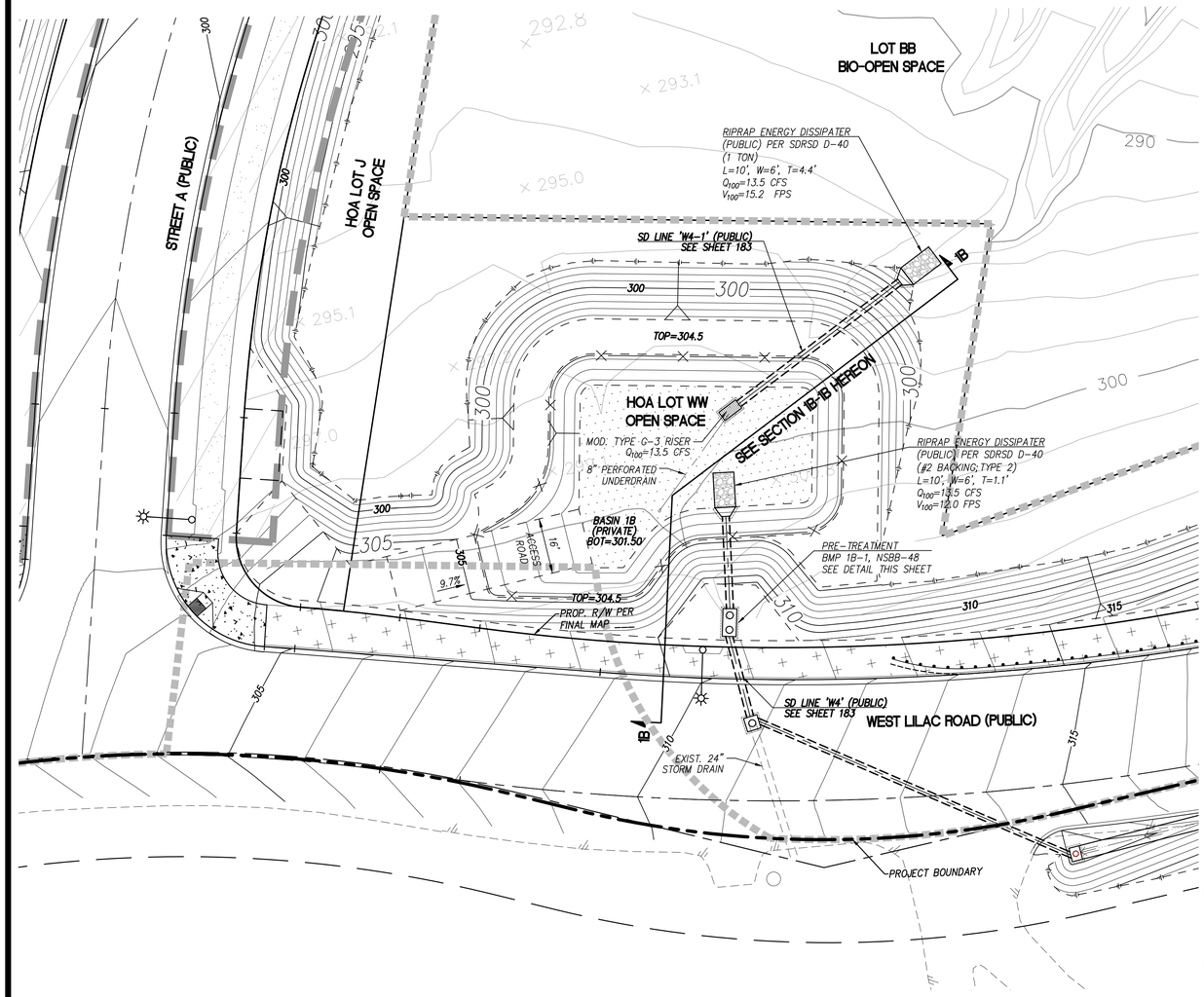


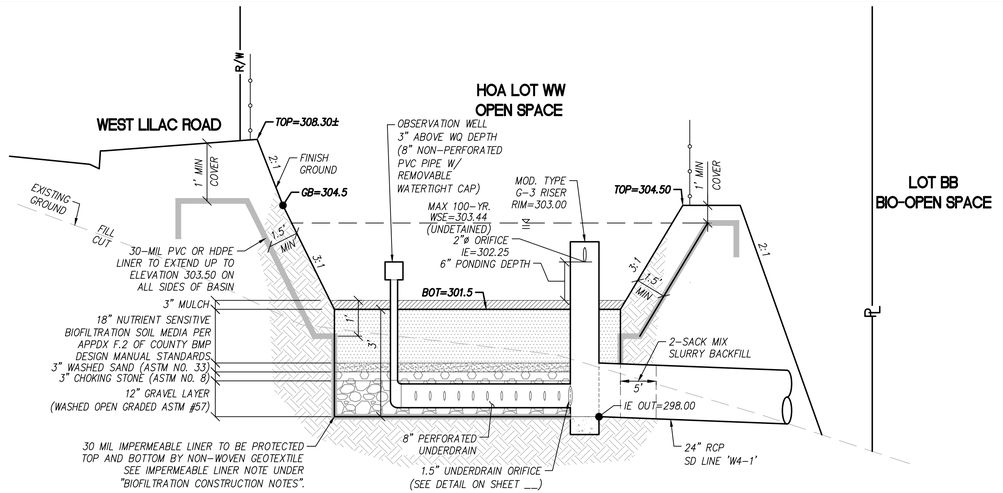


## SECTION 1B-1B: BMP 1B
## LINED BIOFILTRATION (PRIVATE)

NOT TO SCALE

| SITE SPECIFIC DATA | |
|---|---|
| Structure ID | Basin 1B-1 |
| Water Quality Flow Rate (cfs) | 0.52 |
| Peak Flow Rate (cfs) | 13.50 |
| Rim Elevation | 311.04' |
| Top of Vault Elevation | 306.93' |

| Pipe Data | Pipe Size | Pipe Type | Invert Elevation |
|---|---|---|---|
| Inlet | 24" | RCP | 303.36' |
| Outlet | 24" | RCP | 303.26' |

Notes:

| PERFORMANCE SPECIFICATIONS | |
|---|---|
| Screen System Storage Volume | 25.66 cf |
| Total Sump Volume | 88.00 cf |
| NJDEP Sediment Storage Volume | 30.00 cf |
| Peak Flow Capacity* | 26.20 cfs |
| Treatment Flow Capacities:* | |
| NJDEP 50% Removal, 75 micron | 2.49 cfs |
| 80% Removal, 150 micron | 4.60 cfs |

*Contact Oldcastle for additional treatment and peak flow capacities.

**ALL PIPE ANGLES TO BE IMMEDIATELY OUTSIDE OF THE STRUCTURE, BY OTHERS.**

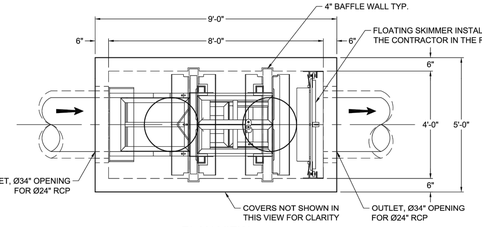


PLAN VIEW

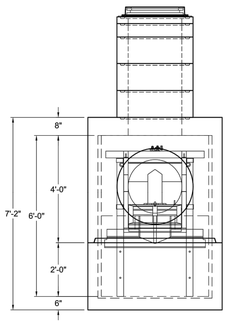


LEFT END VIEW

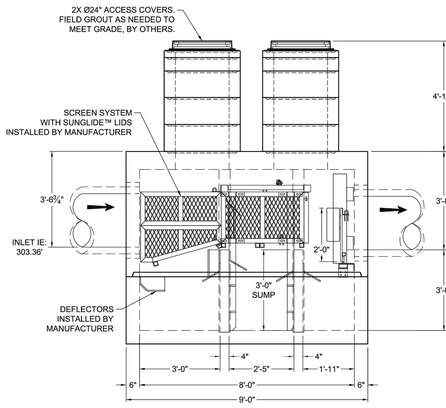


ELEVATION VIEW

NOTES:

1. DESIGN LOADINGS:
   A. AASHTO HS-20-44 (WITH IMPACT)
   B. DESIGN SOIL COVER: 5'-0" MAXIMUM
   C. ASSUMED WATER TABLE: BELOW BASE OF PRECAST (ENGINEER-OF-RECORD TO CONFIRM SITE WATER TABLE ELEVATION)
   D. LATERAL EARTH PRESSURE: 45 PCF (DRAINED)
   E. LATERAL LIVE LOAD SURCHARGE: 80 PSF (APPLIED TO 6'-0" BELOW GRADE)
   F. NO LATERAL SURCHARGE FROM ADJACENT BUILDINGS, WALLS, PIERS, OR FOUNDATIONS.
2. CONCRETE 28-DAY MINIMUM COMPRESSIVE STRENGTH: 5,000 PSI MINIMUM.
3. REINFORCING: REBAR, ASTM A615/A706, GRADE 60
4. CEMENT: ASTM C150
5. REQ'D ALLOWABLE SOIL BEARING CAPACITY: 2,500 PSF
6. REFERENCE STANDARD:
   A. ASTM C890
   B. ASTM C913
   C. ACI 318-14
7. THIS STRUCTURE IS DESIGNED TO THE PARAMETERS NOTED HEREIN. ENGINEER-OF-RECORD SHALL VERIFY THAT NOTED PARAMETERS MEET OR EXCEED PROJECT REQUIREMENTS. IF DESIGN PARAMETERS ARE INCORRECT, REVIEWING ENGINEER/AUTHORITY SHALL NOTIFY OLDCASTLE INFRASTRUCTURE UPON REVIEW OF THIS SUBMITTAL.
8. OVERSIZED HOLES TO ACCOMMODATE SPECIFIC PIPE TYPE MUST BE CONCENTRIC TO PIPE ID. AFTER PIPES ARE INSTALLED, ALL ANNULAR SPACES SHALL BE FILLED WITH A MINIMUM OF 3,000 PSI CONCRETE FOR FULL THICKNESS OF PRECAST WALLS. PIPES ARE TO BE FLUSH WITH THE INSIDE SURFACE OF THE CONCRETE STRUCTURE.
9. CONTRACTOR RESPONSIBLE TO VERIFY ALL SIZES, LOCATIONS, AND ELEVATIONS OF OPENINGS.
10. CONTRACTOR RESPONSIBLE TO ENSURE ADEQUATE BEARING SURFACE IS PROVIDED (I.E. COMPACTED AND LEVEL PER PROJECT SPECIFICATIONS).
11. SECTION HEIGHTS, SLAB/WALL THICKNESSES, AND KEYWAYS ARE SUBJECT TO CHANGE, AS REQUIRED FOR SITE REQUIREMENTS AND/OR DUE TO PRODUCT AVAILABILITY AND PRODUCTION FACILITY CONSTRAINTS.
12. FOR SITE SPECIFIC DRAWINGS WITH DETAILED STRUCTURE DIMENSIONS AND WEIGHTS, PLEASE CONTACT OLDCASTLE INFRASTRUCTURE.
13. MAXIMUM PICK WEIGHT: 10,500 LBS. (* COMBINED WEIGHT INCLUDES BAFFLE WALLS AND PRODUCT INTERNALS.)
14. INTERNALS SHALL CONSIST OF A FLOATING SKIMMER, FLOW DEFLECTORS, ELEVATED CENTRAL SCREEN SYSTEM AND SLIDING LIDS. THESE COMPONENTS EFFECTIVELY REDUCE HEAD LOSS, INCREASE POLLUTANT REMOVAL AND SIMPLIFY MAINTENANCE.

- PRELIMINARY -
NOT FOR CONSTRUCTION

Oldcastle Infrastructure
A CRH COMPANY
Ph: 800.579.8818 | www.oldcastleinfrastructure.com/stormwater

THIS DOCUMENT IS THE PROPERTY OF OLDCASTLE INFRASTRUCTURE, INC. AND IS CONFIDENTIAL AND THE INFORMATION HEREIN DISCLOSED SHALL NOT BE USED IN ANY WAY INJURIOUS TO THE INTERESTS OF, OR WITHOUT THE WRITTEN PERMISSION OF OLDCASTLE INFRASTRUCTURE, INC. COPYRIGHT © 2020 OLDCASTLE INFRASTRUCTURE, INC. ALL RIGHTS RESERVED.

Nutrient Separating Baffle Box®
NSBB-48

CUSTOMER: Bowman
PROJECT NAME: Ocean Breeze Ranch (OBR) - Bonsall, CA

| DATE | QT | DRAWN | REVIEW | DESIGN | SALES ORDER |
|---|---|---|---|---|---|
| 6/6/24 | 270-FO | PPS | HMF | HMF | - |

| DRAWING NAME | REVISION | SHEET |
|---|---|---|
| 21-603205-NSBB-48_Basin 1B-1 | REV DATE 10/28/24 | 1 OF 1 |

THIS PRODUCT IS PROTECTED BY ONE OR MORE OF THE FOLLOWING US PATENT(S): 6,428,692; 7,270,747; 7,991,283; 8,142,666; 8,366,923; 8,491,797; 7,846,327; 8,034,236; RELATED FOREIGN PATENTS, OR OTHER PATENTS PENDING.

REGISTERED PROFESSIONAL ENGINEER
GREGORY M. SHIELDS
No. 42951
Exp. 03-31-26
CIVIL
STATE OF CALIFORNIA

**Bowman**

Bowman Consulting Group Ltd
701 B Street, Suite 800
San Diego, CA 92101
Phone: 619.235.6471
Bowman.com
© 2024 Bowman Consulting Group Ltd

| GREGORY M. SHIELDS, R.C.E. 42951 | DATE REGISTRATION EXPIRES 3-31-26 | DESIGNED BY: | PM REVIEW: | SURVEY REVIEW: |
|---|---|---|---|---|
| | | MC/LG | RR/IM | SS |

## BASIN 1B
## LINED BIOFILTRATION (PRIVATE)

SCALE: 1"=20'

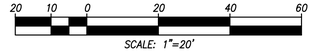


SCALE: 1"=20'




### COUNTY APPROVED CHANGES

| NO. | DESCRIPTION: | APPROVED BY: | DATE: |
|---|---|---|---|
| | | | |

### RECORD PLAN

BY: _____ DATE: _____
NAME

R.C.E. _____

EXPIRES: _____

### BENCH MARK

DESCRIPTION: FOUND 2" BRASS DISK MARKED "CALIF." "DEPT OF TRANSPORTATION" "SDGPS 03" "1991" "NE 15/76" & "1980"
LOCATION: BRASS DISK IN CONCRETE SIDEWALK ON NE CORNER BRIDGE ABUTMENT, 2.5' FROM FACE OF CURB & 2.5' FROM EXPANSION JOINT. BRIDGE IS FOR HWY 76 AND SPANS INTERSTATE I-15.
RECORD FROM: ROS 21563
ELEVATION: 308.26
DATUM: NAVD 88

### PRIVATE CONTRACT

| SHEET 194 | COUNTY OF SAN DIEGO DEPARTMENT OF PUBLIC WORKS | 243 SHEETS |
|---|---|---|

BMP DETAILS FOR:
OCEAN BREEZE RANCH-TM 5615

CALIFORNIA COORDINATE INDEX 410-1701,410-1707,410-1713 414-1703,414-1707,414-1719 418-1713,418-1719

APPROVED FOR: WILLIAM P. MORGAN, COUNTY ENGINEER
BY: _____ DATE: _____

ENGINEER OF WORK
DATE: 11/7/2024
GREGORY SHIELDS, RCE NO. 042951, EXP. 03-31-26

PDS2020-LDGRMJ-30295
GRADING PERMIT NO:

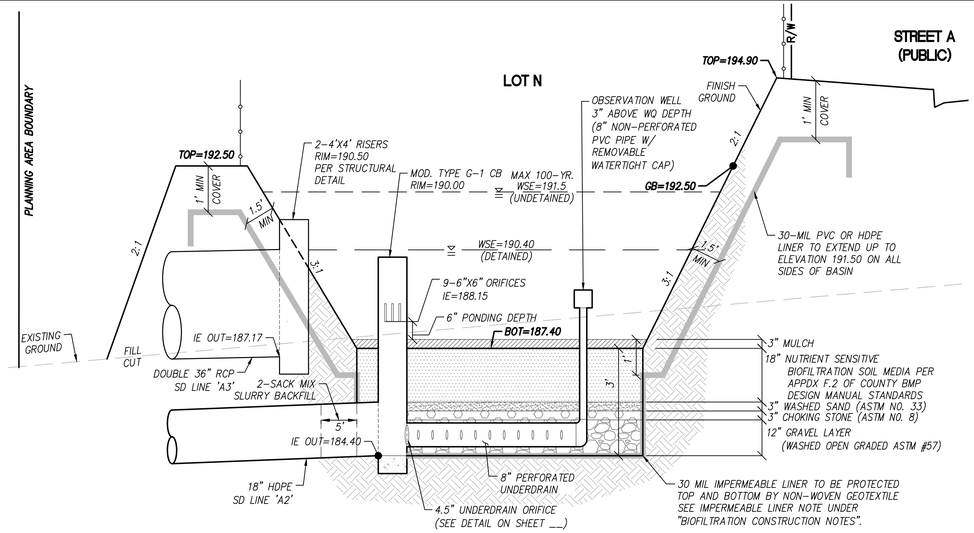


## SECTION 2A-2A: BMP 2A
## LINED BIOFILTRATION (PRIVATE)
NOT TO SCALE

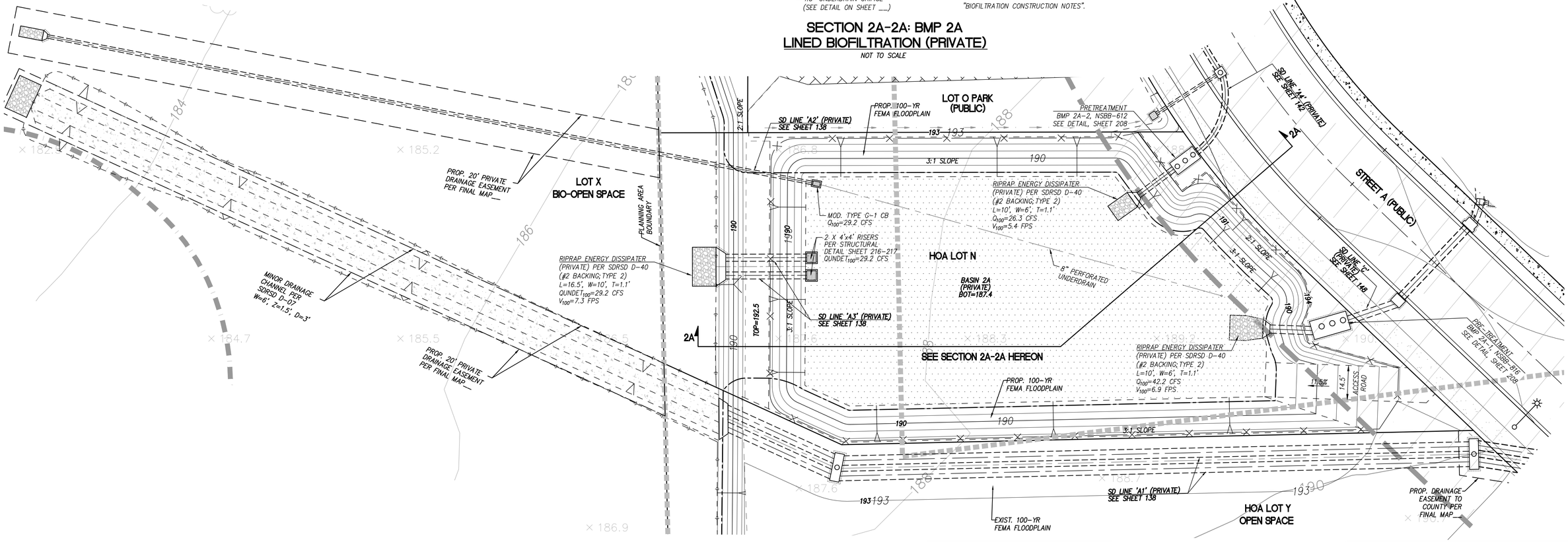


## BASIN 2A
## LINED BIOFILTRATION (PRIVATE)
SCALE: 1"=20'

20 10 0 20 40 60
SCALE: 1"=20'

N

REGISTERED PROFESSIONAL ENGINEER
GREGORY M. SHIELDS
No. 42951
Exp. 03-31-26
CIVIL
STATE OF CALIFORNIA

**Bowman**

Bowman Consulting Group Ltd
701 B Street, Suite 800
San Diego, CA 92101
Phone: 619.235.6471
Bowman.com
© 2024 Bowman Consulting Group Ltd

| GREGORY M. SHIELDS, R.C.E. 42951 | DATE | REGISTRATION EXPIRES 3-31-26 | DESIGNED BY: | PM REVIEW: | SURVEY REVIEW: |
|---|---|---|---|---|---|
| | | | MC/LG | RR/IM | SS |

**COUNTY APPROVED CHANGES**

| NO. | DESCRIPTION: | APPROVED BY: | DATE: |
|---|---|---|---|
| | | | |

**RECORD PLAN**

BY: _____ DATE: _____
NAME
R.C.E. _____
EXPIRES: _____

**BENCH MARK**

DESCRIPTION: FOUND 2" BRASS DISK MARKED "CALIF." "DEPT OF TRANSPORTATION" "SDGPS 03" "1991" "NE 15/76" & "1980"
LOCATION: BRASS DISK IN CONCRETE SIDEWALK ON NE CORNER BRIDGE ABUTMENT, 2.5' FROM FACE OF CURB & 2.5' FROM EXPANSION JOINT.
BRIDGE IS FOR HWY 76 AND SPANS INTERSTATE I-15.
RECORD FROM: ROS 21563
ELEVATION: 308.26
DATUM: NAVD 88

**PRIVATE CONTRACT**

| SHEET 195 | COUNTY OF SAN DIEGO DEPARTMENT OF PUBLIC WORKS | 243 SHEETS |
|---|---|---|

BMP DETAILS FOR:
OCEAN BREEZE RANCH-TM 5615

CALIFORNIA COORDINATE INDEX: 410-1701,410-1707,410-1713 414-1703,414-1707,414-1719 418-1713,418-1719

APPROVED FOR: WILLIAM P. MORGAN, COUNTY ENGINEER
BY: _____ DATE: _____

ENGINEER OF WORK
GREGORY SHIELDS, RCE NO. C42951, EXP. 03-31-26
DATE:

PDS2020-LDGRMJ-30295
GRADING PERMIT NO:

Last save by LOURDES GARCIA, File Name Q:\CA-SAND-PD\Projects\4192.10\Engr\DWG_Plans\Grading Rough\7 BMP SHEETS\4192.10 0187_RG-BMP.dwg, Date Last Saved 11/7/2024 9:31:06 AM, Date Plotted Last 11/7/2024 3:54:41 PM

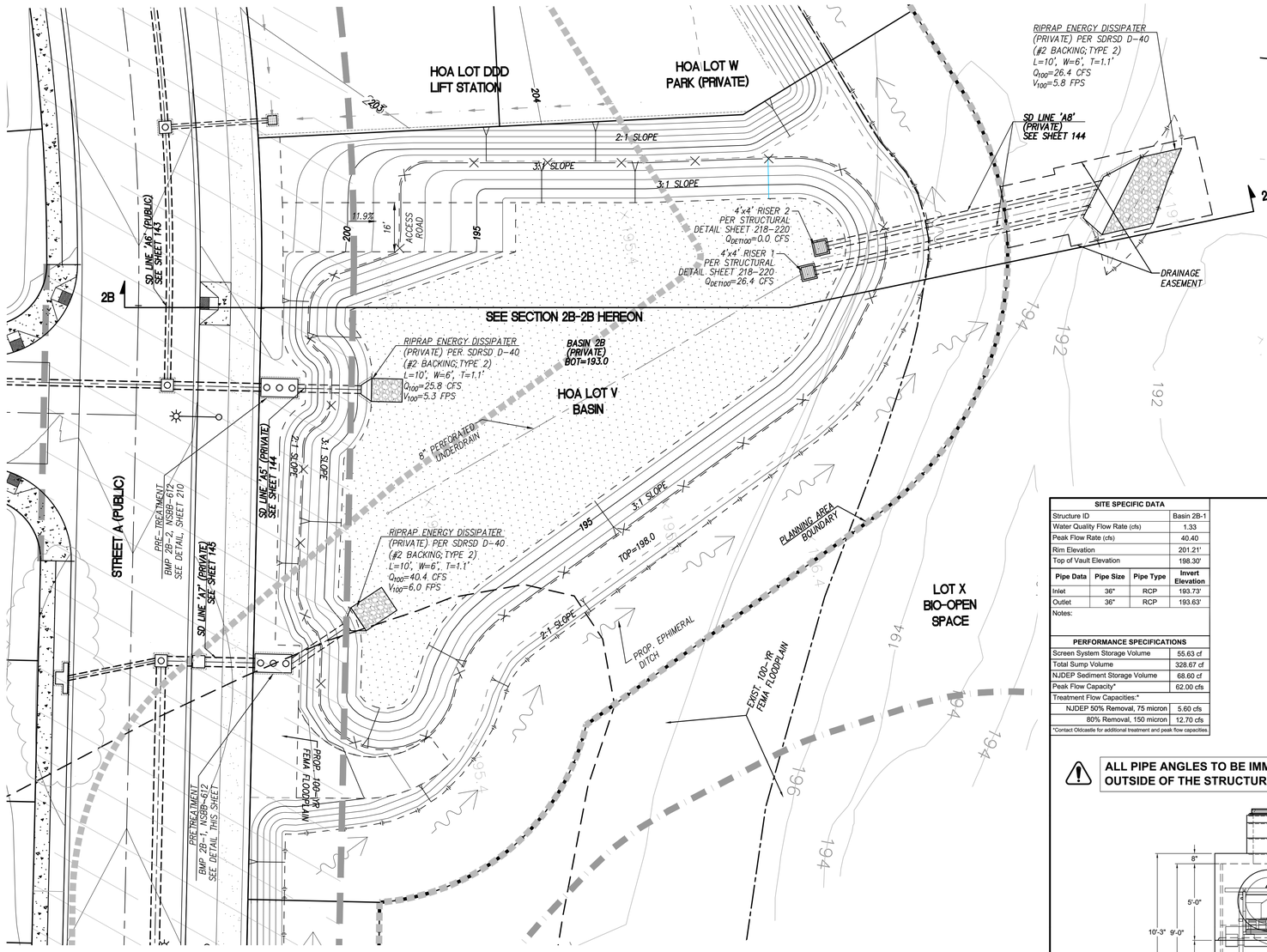


## BASIN 2B
## LINED BIOFILTRATION (PRIVATE)
*SCALE: 1"=20'*

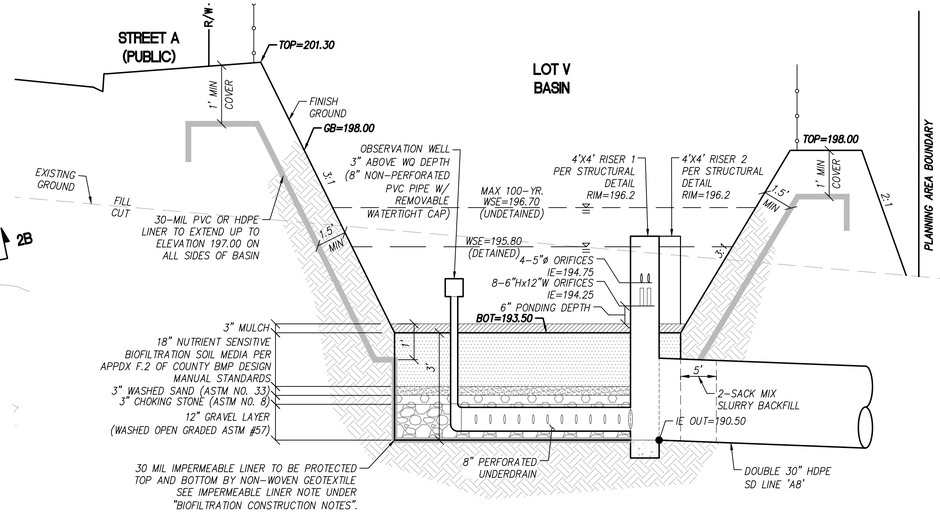


## SECTION 2B-2B: BMP 2B
## LINED BIOFILTRATION (PRIVATE)
*NOT TO SCALE*

| SITE SPECIFIC DATA | |
|---|---|
| Structure ID | Basin 2B-1 |
| Water Quality Flow Rate (cfs) | 1.33 |
| Peak Flow Rate (cfs) | 40.40 |
| Rim Elevation | 201.21' |
| Top of Vault Elevation | 198.30' |

| Pipe Data | Pipe Size | Pipe Type | Invert Elevation |
|---|---|---|---|
| Inlet | 36" | RCP | 193.73' |
| Outlet | 36" | RCP | 193.63' |

Notes:

| PERFORMANCE SPECIFICATIONS | |
|---|---|
| Screen System Storage Volume | 55.63 cf |
| Total Sump Volume | 328.67 cf |
| NJDEP Sediment Storage Volume | 68.60 cf |
| Peak Flow Capacity* | 62.00 cfs |
| Treatment Flow Capacities:* | |
| NJDEP 50% Removal, 75 micron | 5.60 cfs |
| 80% Removal, 150 micron | 12.70 cfs |

*Contact Oldcastle for additional treatment and peak flow capacities.

**ALL PIPE ANGLES TO BE IMMEDIATELY OUTSIDE OF THE STRUCTURE, BY OTHERS.**

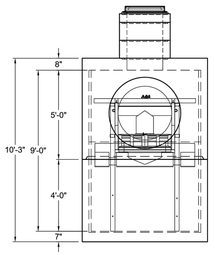


LEFT END VIEW

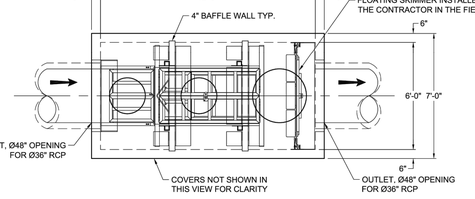


PLAN VIEW

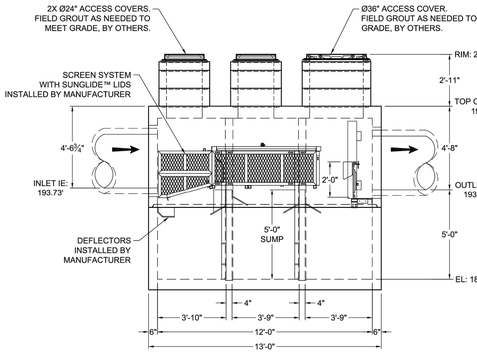


ELEVATION VIEW

THIS PRODUCT IS PROTECTED BY ONE OR MORE OF THE FOLLOWING US PATENT(S): 6,428,692; 7,270,747; 7,981,283; 8,142,666; 8,366,923; 8,491,797; 7,846,327; 9,034,236; RELATED FOREIGN PATENTS, OR OTHER PATENTS PENDING.

NOTES:

1. DESIGN LOADINGS:
   A. AASHTO HS-20-44 (WITH IMPACT).
   B. DESIGN SOIL COVER: 5'-0" MAXIMUM
   C. ASSUMED WATER TABLE: BELOW BASE OF PRECAST (ENGINEER-OF-RECORD TO CONFIRM SITE WATER TABLE ELEVATION)
   D. LATERAL EARTH PRESSURE: 45 PCF (DRAINED)
   E. LATERAL LIVE LOAD SURCHARGE: 80 PSF (APPLIED TO 8'-0" BELOW GRADE)
   F. NO LATERAL SURCHARGE FROM ADJACENT BUILDINGS, WALLS, PIERS, OR FOUNDATIONS.
2. CONCRETE 28-DAY MINIMUM COMPRESSIVE STRENGTH: 5,000 PSI MINIMUM.
3. REINFORCING: REBAR, ASTM A615/A706, GRADE 60
4. CEMENT: ASTM C150
5. RED'D ALLOWABLE SOIL BEARING CAPACITY: 2,500 PSF
6. REFERENCE STANDARD:
   A. ASTM C890
   B. ASTM C913
   C. ACI 318-14
7. THIS STRUCTURE IS DESIGNED TO THE PARAMETERS NOTED HEREIN. ENGINEER-OF-RECORD SHALL VERIFY THAT NOTED PARAMETERS MEET OR EXCEED PROJECT REQUIREMENTS. IF DESIGN PARAMETERS ARE INCORRECT, REVIEWING ENGINEER/AUTHORITY SHALL NOTIFY OLDCASTLE INFRASTRUCTURE UPON REVIEW OF THIS SUBMITTAL.
8. OVERSIZED HOLES TO ACCOMMODATE SPECIFIC PIPE TYPE MUST BE CONCENTRIC TO PIPE ID. AFTER PIPES ARE INSTALLED, ALL ANNULAR SPACES SHALL BE FILLED WITH A MINIMUM OF 3,000 PSI CONCRETE FOR FULL THICKNESS OF PRECAST WALLS. PIPES ARE TO BE FLUSH WITH THE INSIDE SURFACE OF THE CONCRETE STRUCTURE.
9. CONTRACTOR RESPONSIBLE TO VERIFY ALL SIZES, LOCATIONS, AND ELEVATIONS OF OPENINGS.
10. CONTRACTOR RESPONSIBLE TO ENSURE ADEQUATE BEARING SURFACE IS PROVIDED (I.E. COMPACTED AND LEVEL PER PROJECT SPECIFICATIONS).
11. SECTION HEIGHTS, SLAB/WALL THICKNESSES, AND KEYWAYS ARE SUBJECT TO CHANGE AS REQUIRED FOR SITE REQUIREMENTS AND/OR DUE TO PRODUCT AVAILABILITY AND PRODUCTION FACILITY CONSTRAINTS.
12. FOR SITE SPECIFIC DRAWINGS WITH DETAILED STRUCTURE DIMENSIONS AND WEIGHTS, PLEASE CONTACT OLDCASTLE INFRASTRUCTURE.
13. MAXIMUM PICK WEIGHT: 23,750 LBS. (* COMBINED WEIGHT INCLUDES BAFFLE WALLS AND PRODUCT INTERNALS.)
14. INTERNALS SHALL CONSIST OF A FLOATING SKIMMER, FLOW DEFLECTORS, ELEVATED CENTRAL SCREEN SYSTEM AND SLIDING LIDS. THESE COMPONENTS EFFECTIVELY REDUCE HEAD LOSS, INCREASE POLLUTANT REMOVAL AND SIMPLIFY MAINTENANCE.

**- PRELIMINARY - NOT FOR CONSTRUCTION**

Oldcastle Infrastructure
A CRH COMPANY
Ph: 800.579.8519 | www.oldcastleinfrastructure.com/stormwater

THIS DOCUMENT IS THE PROPERTY OF OLDCASTLE INFRASTRUCTURE, INC. AND IS CONFIDENTIAL. THIS DOCUMENT AND THE INFORMATION IT CONTAINS SHALL NOT BE USED IN ANY WAY INJURIOUS TO THE INTERESTS OF, OR WITHOUT THE WRITTEN PERMISSION OF OLDCASTLE INFRASTRUCTURE, INC. COPYRIGHT © 2024 OLDCASTLE INFRASTRUCTURE, INC. ALL RIGHTS RESERVED.

Nutrient Separating Baffle Box®
NSBB-612

| CUSTOMER | | | | | |
|---|---|---|---|---|---|
| Bowman | | | | | |
| PROJECT NAME | | | | | |
| Ocean Breeze Ranch (OBR) - Bonsall, CA | | | | | |
| DATE | BY | DRAWN BY | CHECKED | DESIGN ENGR | |
| 6/6/24 | 070-FO | PPS | HMF | HMF | |
| SHEET NAME | | REVISION | | SHEET | |
| 21-603205-NSBB-612_Basin 2B-1 | | REV DATE | 10/8/24 | 1 OF 1 | |




**Bowman**

Bowman Consulting Group Ltd
701 B Street, Suite 800
San Diego, CA 92101
Phone: 619.235.6471
Bowman.com
© 2024 Bowman Consulting Group Ltd

| GREGORY M. SHIELDS, R.C.E. 42951 | DATE | REGISTRATION EXPIRES 3-31-26 | DESIGNED BY: | PM REVIEW: | SURVEY REVIEW: |
|---|---|---|---|---|---|
| | | | MC/LG | RR/IM | SS |

20 10 0 20 40 60
*SCALE: 1"=20'*

## COUNTY APPROVED CHANGES

| NO. | DESCRIPTION: | APPROVED BY: | DATE: |
|---|---|---|---|
| | | | |

## RECORD PLAN

BY: _____ DATE: _____
NAME
R.C.E. _____
EXPIRES: _____

## BENCH MARK

DESCRIPTION: FOUND 2" BRASS DISK MARKED "CALIF." "DEPT OF TRANSPORTATION" "SDGPS 03" "1991" "NE 15/76" & "1980"
LOCATION: BRASS DISK IN CONCRETE SIDEWALK ON NE CORNER BRIDGE ABUTMENT, 2.5' FROM FACE OF CURB & 2.5' FROM EXPANSION JOINT.
BRIDGE IS FOR HWY 76 AND SPANS INTERSTATE I-15.
RECORD FROM: ROS 21563
ELEVATION: 308.26
DATUM: NAVD 88

## PRIVATE CONTRACT

| SHEET | COUNTY OF SAN DIEGO | SHEETS |
|---|---|---|
| 196 | DEPARTMENT OF PUBLIC WORKS | 243 |

BMP DETAILS FOR:
OCEAN BREEZE RANCH-TM 5615

CALIFORNIA COORDINATE INDEX: 410-1701,410-1707,410-1713 414-1703,414-1707,414-1719 418-1713,418-1719

APPROVED FOR: WILLIAM P. MORGAN, COUNTY ENGINEER
BY: _____ DATE: _____

ENGINEER OF WORK
DATE: GREGORY SHIELDS, RCE NO. C42951, EXP. 03-31-26

PDS2020-LDGRMJ-30295
GRADING PERMIT NO:

*Last save by LOURDES GARCIA, File Name Q:\CA-SAND-PD\Projects\4192.10\Engr\DWG_Plans\Grading Rough\7 BMP SHEETS\4192.10 0188_RG-BMP.dwg, Date Last Saved 11/7/2024 9:35:01 AM, Date Plotted Last 11/7/2024 3:57:16 PM*

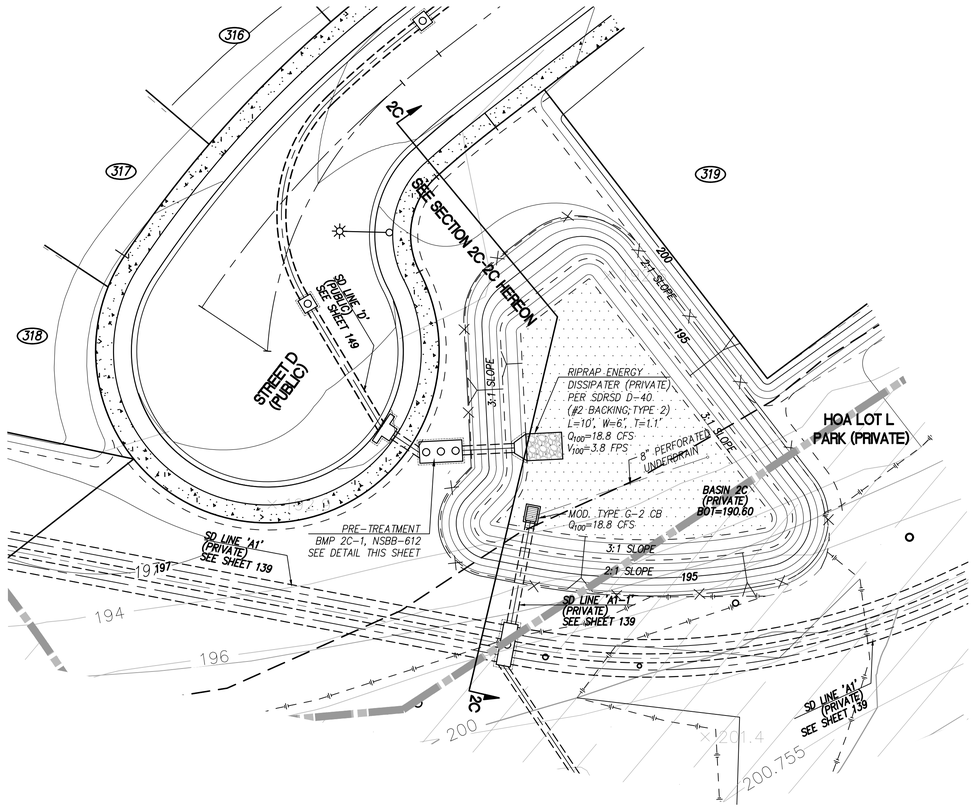


## BASIN 2C
## LINED BIOFILTRATION (PRIVATE)
SCALE: 1"=20'

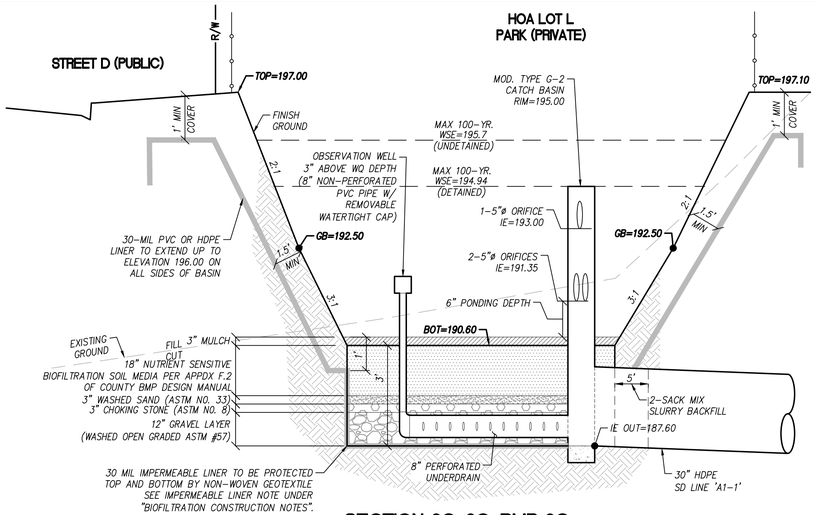


## SECTION 2C-2C: BMP 2C
## LINED BIOFILTRATION (PRIVATE)
NOT TO SCALE

| SITE SPECIFIC DATA | |
|---|---|
| Structure ID | Basin 2C-1 |
| Water Quality Flow Rate (cfs) | 0.87 |
| Peak Flow Rate (cfs) | 20.40 |
| Rim Elevation | 197.19' |
| Top of Vault Elevation | 195.45' |

| Pipe Data | Pipe Size | Pipe Type | Invert Elevation |
|---|---|---|---|
| Inlet | 30" | HDPE | 190.88' |
| Outlet | 30" | HDPE | 190.78' |

Notes:

| PERFORMANCE SPECIFICATIONS | |
|---|---|
| Screen System Storage Volume | 55.63 cf |
| Total Sump Volume | 328.67 cf |
| NJDEP Sediment Storage Volume | 68.60 cf |
| Peak Flow Capacity* | 62.00 cfs |
| Treatment Flow Capacities:* | |
| NJDEP 50% Removal, 75 micron | 5.60 cfs |
| 80% Removal, 150 micron | 12.70 cfs |

*Contact Oldcastle for additional treatment and peak flow capacities

**ALL PIPE ANGLES TO BE IMMEDIATELY OUTSIDE OF THE STRUCTURE, BY OTHERS.**

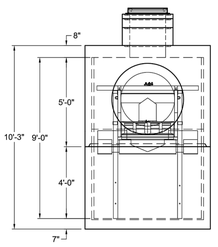


LEFT END VIEW

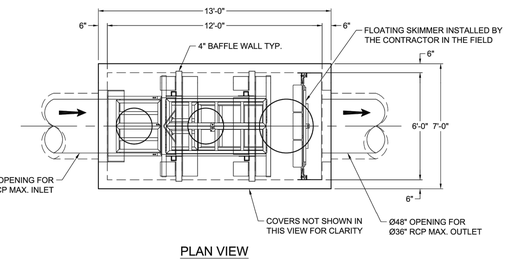


PLAN VIEW

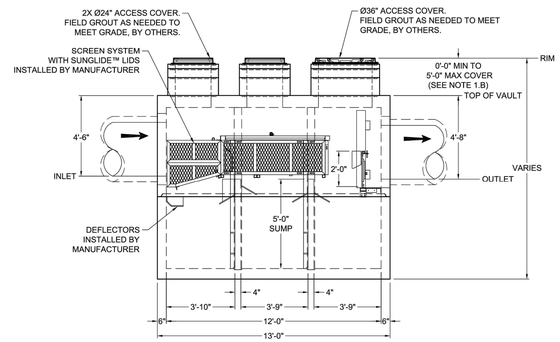


ELEVATION VIEW

THIS PRODUCT IS PROTECTED BY ONE OR MORE OF THE FOLLOWING US PATENT(S): 6,428,692; 7,270,747; 7,981,283; 8,142,660; 8,366,923; 8,491,797; 7,846,327; 8,034,236; RELATED FOREIGN PATENTS, OR OTHER PATENTS PENDING.

NOTES:

1. DESIGN LOADINGS:
   A. AASHTO HS-20-44 (WITH IMPACT)
   B. DESIGN SOIL COVER: 5'-0" MAXIMUM
   C. ASSUMED WATER TABLE: BELOW BASE OF PRECAST (ENGINEER-OF-RECORD TO CONFIRM SITE WATER TABLE ELEVATION)
   D. LATERAL EARTH PRESSURE: 45 PCF (DRAINED)
   E. LATERAL LIVE LOAD SURCHARGE: 80 PSF (APPLIED TO 8'-0" BELOW GRADE)
   F. NO LATERAL SURCHARGE FROM ADJACENT BUILDINGS, WALLS, PIERS, OR FOUNDATIONS.
2. CONCRETE 28-DAY MINIMUM COMPRESSIVE STRENGTH: 5,000 PSI MINIMUM.
3. REINFORCING: REBAR, ASTM A615/A706, GRADE 60
4. CEMENT: ASTM C150
5. REQ'D ALLOWABLE SOIL BEARING CAPACITY: 2,500 PSF
6. REFERENCE STANDARD:
   A. ASTM C890
   B. ASTM C913
   C. ACI 318-14
7. THIS STRUCTURE IS DESIGNED TO THE PARAMETERS NOTED HEREIN. ENGINEER-OF-RECORD SHALL VERIFY THAT NOTED PARAMETERS MEET OR EXCEED PROJECT REQUIREMENTS. IF DESIGN PARAMETERS ARE INCORRECT, REVIEWING ENGINEER/AUTHORITY SHALL NOTIFY OLDCASTLE INFRASTRUCTURE UPON REVIEW OF THIS SUBMITTAL.
8. OVERSIZED HOLES TO ACCOMMODATE SPECIFIC PIPE TYPE MUST BE CONCENTRIC TO PIPE ID. AFTER PIPES ARE INSTALLED, ALL ANNULAR SPACES SHALL BE FILLED WITH A MINIMUM OF 3,000 PSI CONCRETE FOR FULL THICKNESS OF PRECAST WALLS. PIPES ARE TO BE FLUSH WITH THE INSIDE SURFACE OF THE CONCRETE STRUCTURE.
9. CONTRACTOR RESPONSIBLE TO VERIFY ALL SIZES, LOCATIONS, AND ELEVATIONS OF OPENINGS.
10. CONTRACTOR RESPONSIBLE TO ENSURE ADEQUATE BEARING SURFACE IS PROVIDED (I.E. COMPACTED AND LEVEL PER PROJECT SPECIFICATIONS).
11. SECTION HEIGHTS, SLAB/WALL THICKNESSES, AND KEYWAYS ARE SUBJECT TO CHANGE AS REQUIRED FOR SITE REQUIREMENTS AND/OR DUE TO PRODUCT AVAILABILITY AND PRODUCTION FACILITY CONSTRAINTS.
12. FOR SITE SPECIFIC DRAWINGS WITH DETAILED STRUCTURE DIMENSIONS AND WEIGHTS, PLEASE CONTACT OLDCASTLE INFRASTRUCTURE.
13. MAXIMUM PICK WEIGHT: 23,750 LBS. (* COMBINED WEIGHT INCLUDES BAFFLE WALLS AND PRODUCT INTERNALS.)
14. INTERNALS SHALL CONSIST OF A FLOATING SKIMMER, FLOW DEFLECTORS, ELEVATED CENTRAL SCREEN SYSTEM AND SLIDING LIDS. THESE COMPONENTS EFFECTIVELY REDUCE HEAD LOSS, INCREASE POLLUTANT REMOVAL AND SIMPLIFY MAINTENANCE.

- PRELIMINARY -
NOT FOR CONSTRUCTION

Oldcastle Infrastructure
A CRH COMPANY
Ph: 800.579.8818 | www.oldcastleinfrastructure.com/stormwater

THIS DOCUMENT IS THE PROPERTY OF OLDCASTLE INFRASTRUCTURE, INC. IT IS CONFIDENTIAL, IS PROVIDED FOR REFERENCE PURPOSES ONLY, AND SHALL NOT BE USED IN ANY WAY INJURIOUS TO THE INTERESTS OF, OR INTERFERENCE WITH THE BUSINESS OF OLDCASTLE INFRASTRUCTURE, INC. COPYRIGHT © 2020 OLDCASTLE INFRASTRUCTURE, INC. ALL RIGHTS RESERVED.

Nutrient Separating Baffle Box®
NSBB-612

| CUSTOMER | | | | | |
|---|---|---|---|---|---|
| Bowman | | | | | |
| PROJECT NAME | | | | | |
| Ocean Breeze Ranch (OBR) - Bonsall, CA | | | | | |
| DATE | MFG | DRAWN | ENGINEER | CHECKED | SALES ORDER |
| 6/6/24 | 070-FOJ | PPS | | AFD | - |
| SHEET NAME | | | | REVISION | SHEET |
| 21-603205-NSBB-612_Basin 2C-1 | | | | REV DATE: | 1 OF 1 |




**Bowman**
Bowman Consulting Group Ltd
701 B Street, Suite 800
San Diego, CA 92101
Phone: 619.235.6471
Bowman.com
© 2024 Bowman Consulting Group Ltd

| GREGORY M. SHIELDS, R.C.E. 42951 | DATE | REGISTRATION EXPIRES 3-31-26 | DESIGNED BY: | PM REVIEW: | SURVEY REVIEW: |
|---|---|---|---|---|---|
| | | | MC/LG | RR/IM | SS |

20 10 0 20 40 60
SCALE: 1"=20'

N

### COUNTY APPROVED CHANGES

| NO. | DESCRIPTION: | APPROVED BY: | DATE: |
|---|---|---|---|
| | | | |

### RECORD PLAN

BY: _____ DATE: _____
NAME
R.C.E. _____
EXPIRES: _____

### BENCH MARK

DESCRIPTION: FOUND 2" BRASS DISK MARKED "CALIF." "DEPT OF TRANSPORTATION" "SDGPS 03" "1991" "NE 15/76" & "1980"
LOCATION: BRASS DISK IN CONCRETE SIDEWALK ON NE CORNER BRIDGE ABUTMENT, 2.5' FROM FACE OF CURB & 2.5' FROM EXPANSION JOINT. BRIDGE IS FOR HWY 76 AND SPANS INTERSTATE I-15.
RECORD FROM: ROS 21563
ELEVATION: 308.26
DATUM: NAVD 88

### PRIVATE CONTRACT

| SHEET 197 | COUNTY OF SAN DIEGO DEPARTMENT OF PUBLIC WORKS | 243 SHEETS |
|---|---|---|

BMP DETAILS FOR:
OCEAN BREEZE RANCH-TM 5615

CALIFORNIA COORDINATE INDEX 410-1701,410-1707,410-1713 414-1703,414-1707,414-1719 418-1713,418-1719

APPROVED FOR: WILLIAM P. MORGAN, COUNTY ENGINEER
BY: _____ DATE: _____

ENGINEER OF WORK
DATE: GREGORY SHIELDS, RCE NO. C42951, EXP. 03-31-26

PDS2020-LDGRMJ-30295
GRADING PERMIT NO:

*Last save by LOURDES GARCIA, File Name Q:\CA-SAND-PD\Projects\4192.10\Engr\DWG_Plans\Grading Rough\7 BMP SHEETS\4192.10 0189_RG-BMP.dwg, Date Last Saved 11/1/2024 12:22:32 AM, Date Plotted Last 11/7/2024 3:59:46 PM*

Q:\CA-SAND-PD\Projects\4192.10\Engr\DWG_Plans\Grading Rough\7 BMP SHEETS\4192.10 0189_RG-BMP.dwg, 11/7/2024 3:58:42 PM, _AutoCAD PDF (General Documentation).pc3

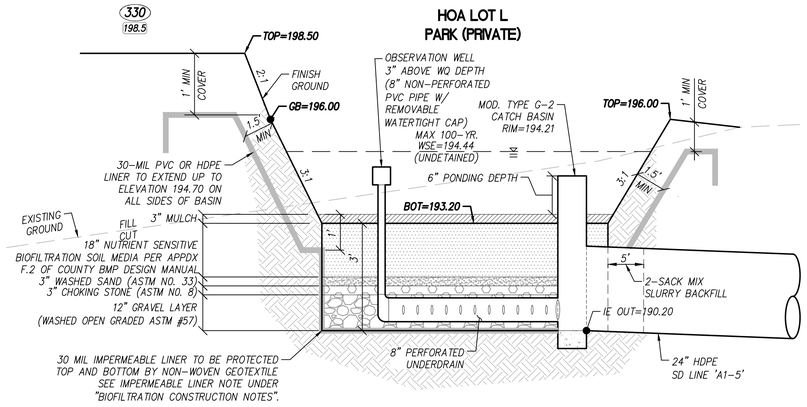


## SECTION 2D-2D: BMP 2D
## LINED BIOFILTRATION (PRIVATE)
*NOT TO SCALE*

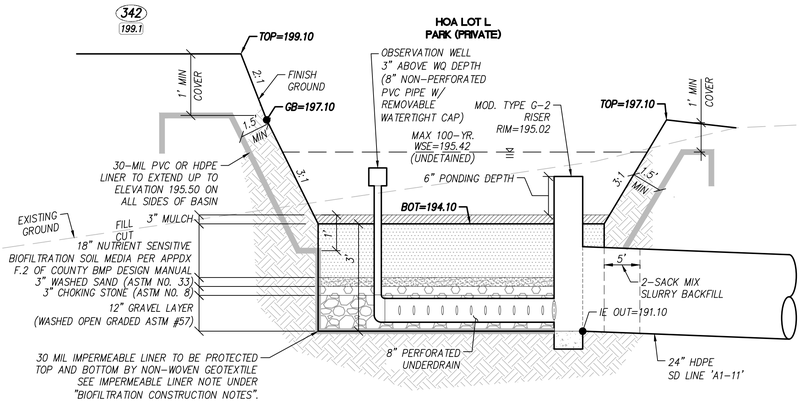


## SECTION 2I-2I: BMP 2I
## LINED BIOFILTRATION (PRIVATE)
*NOT TO SCALE*

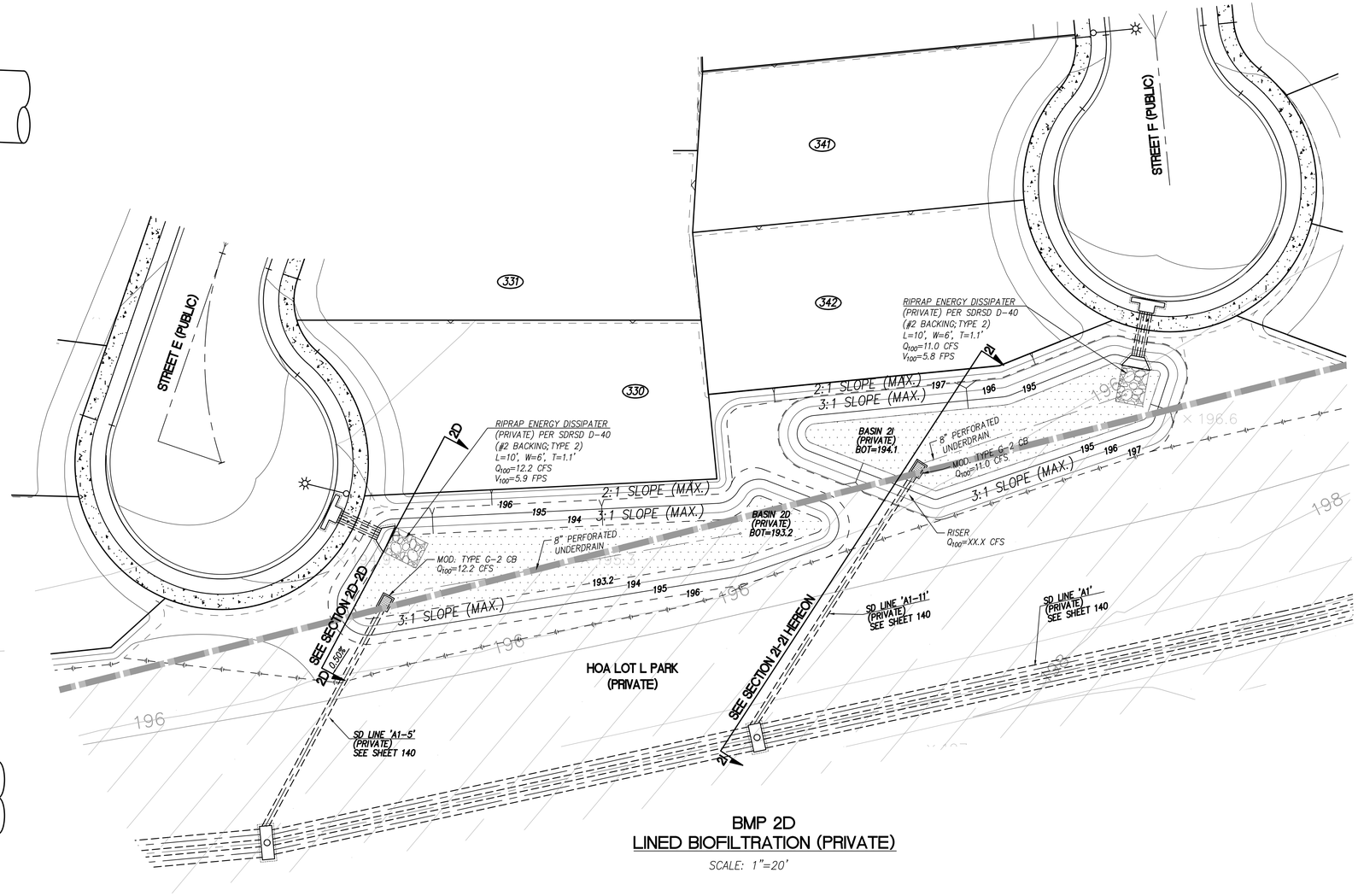


## BMP 2D
## LINED BIOFILTRATION (PRIVATE)
*SCALE: 1"=20'*

REGISTERED PROFESSIONAL ENGINEER
GREGORY M. SHIELDS
No. 42951
Exp. 03-31-26
CIVIL
STATE OF CALIFORNIA

**Bowman**

Bowman Consulting Group Ltd
701 B Street, Suite 800
San Diego, CA 92101

Phone: 619.235.6471
Bowman.com
© 2024 Bowman Consulting Group Ltd

| GREGORY M. SHIELDS, R.C.E. 42951 DATE REGISTRATION EXPIRES 3-31-26 | DESIGNED BY: | PM REVIEW: | SURVEY REVIEW: |
|---|---|---|---|
| | MC/LG | RR/IM | SS |

20 10 0 20 40 60
SCALE: 1"=20'

N

**COUNTY APPROVED CHANGES**

| NO. | DESCRIPTION: | APPROVED BY: | DATE: |
|---|---|---|---|
| | | | |

**RECORD PLAN**

BY: _____ DATE: _____
NAME
R.C.E. _____
EXPIRES: _____

**BENCH MARK**

DESCRIPTION: FOUND 2" BRASS DISK MARKED "CALIF." "DEPT OF TRANSPORTATION" "SDGPS 03" "1991" "NE 15/76" & "1980"
LOCATION: BRASS DISK IN CONCRETE SIDEWALK ON NE CORNER BRIDGE ABUTMENT, 2.5' FROM FACE OF CURB & 2.5' FROM EXPANSION JOINT.
BRIDGE IS FOR HWY 76 AND SPANS INTERSTATE I-15.
RECORD FROM: ROS 21563
ELEVATION: 308.26
DATUM: NAVD 88

**PRIVATE CONTRACT**

| SHEET 198 | COUNTY OF SAN DIEGO DEPARTMENT OF PUBLIC WORKS | 243 SHEETS |
|---|---|---|

BMP DETAILS FOR:
OCEAN BREEZE RANCH-TM 5615

CALIFORNIA COORDINATE INDEX 410-1701,410-1707,410-1713 414-1703,414-1707,414-1719 418-1713,418-1719

APPROVED FOR: WILLIAM P. MORGAN, COUNTY ENGINEER
BY: _____ DATE: _____

ENGINEER OF WORK
DATE: _____
GREGORY SHIELDS, RCE NO. C42951, EXP. 03-31-26

PDS2020-LDGRMJ-30295
GRADING PERMIT NO:

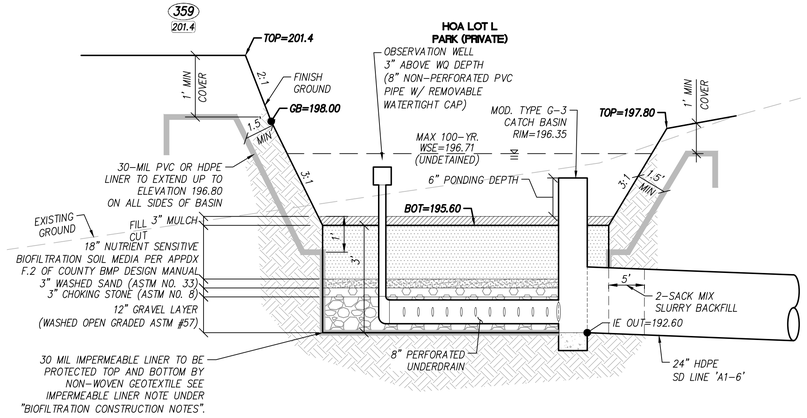


## SECTION 2E-2E: BMP 2E
## LINED BIOFILTRATION (PRIVATE)
NOT TO SCALE

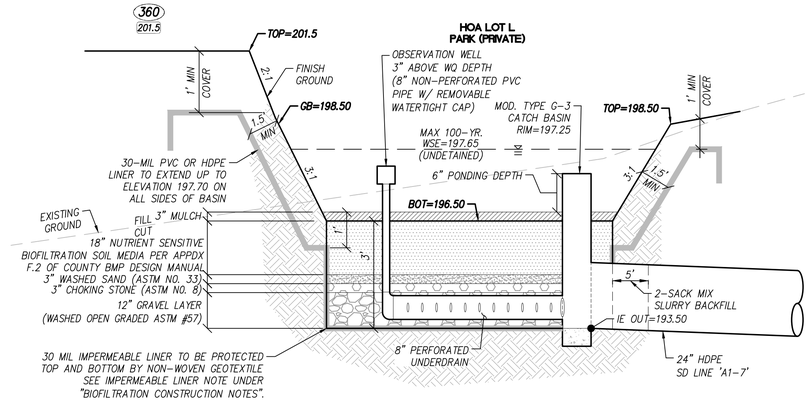


## SECTION 2F-2F: BMP 2F
## LINED BIOFILTRATION (PRIVATE)
NOT TO SCALE

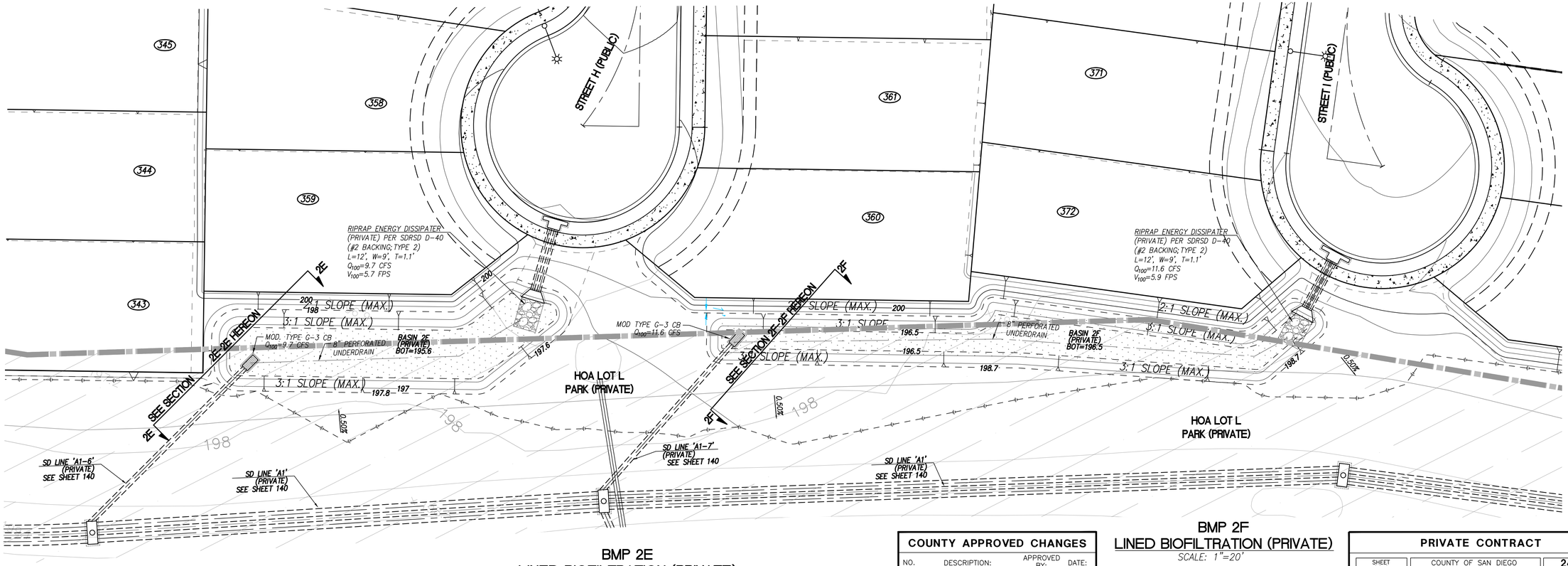


## BMP 2E
## LINED BIOFILTRATION (PRIVATE)
SCALE: 1"=20'

## BMP 2F
## LINED BIOFILTRATION (PRIVATE)
SCALE: 1"=20'

20 10 0 20 40 60
SCALE: 1"=20'

REGISTERED PROFESSIONAL ENGINEER
GREGORY M. SHIELDS
No. 42951
Exp. 03-31-26
CIVIL
STATE OF CALIFORNIA

Bowman

Bowman Consulting Group Ltd
701 B Street, Suite 800
San Diego, CA 92101

Phone: 619.235.6471
Bowman.com
© 2024 Bowman Consulting Group Ltd

| GREGORY M. SHIELDS, R.C.E. 42951 | DATE | REGISTRATION EXPIRES 3-31-26 | DESIGNED BY: | PM REVIEW: | SURVEY REVIEW: |
|---|---|---|---|---|---|
| | | | MC/LG | RR/IM | SS |

**RECORD PLAN**

BY: _____ DATE: _____
NAME
R.C.E. _____
EXPIRES: _____

**COUNTY APPROVED CHANGES**

| NO. | DESCRIPTION: | APPROVED BY: | DATE: |
|---|---|---|---|
| | | | |

**BENCH MARK**

DESCRIPTION: FOUND 2" BRASS DISK MARKED "CALIF." "DEPT OF TRANSPORTATION" "SDGPS 03" "1991" "NE 15/76" & "1980"
LOCATION: BRASS DISK IN CONCRETE SIDEWALK ON NE CORNER BRIDGE ABUTMENT, 2.5' FROM FACE OF CURB & 2.5' FROM EXPANSION JOINT.
BRIDGE IS FOR HWY 76 AND SPANS INTERSTATE I-15.
RECORD FROM: ROS 21563
ELEVATION: 308.26
DATUM: NAVD 88

**PRIVATE CONTRACT**

| SHEET 199 | COUNTY OF SAN DIEGO DEPARTMENT OF PUBLIC WORKS | 243 SHEETS |
|---|---|---|

BMP DETAILS FOR:
OCEAN BREEZE RANCH-TM 5615

CALIFORNIA COORDINATE INDEX 410-1701,410-1707,410-1713 414-1703,414-1707,414-1719 418-1713,418-1719

APPROVED FOR: WILLIAM P. MORGAN, COUNTY ENGINEER
BY: _____ DATE: _____

ENGINEER OF WORK
DATE: _____
GREGORY SHIELDS, RCE NO. C42951, EXP. 03-31-26

PDS2020-LDGRMJ-30295
GRADING PERMIT NO:

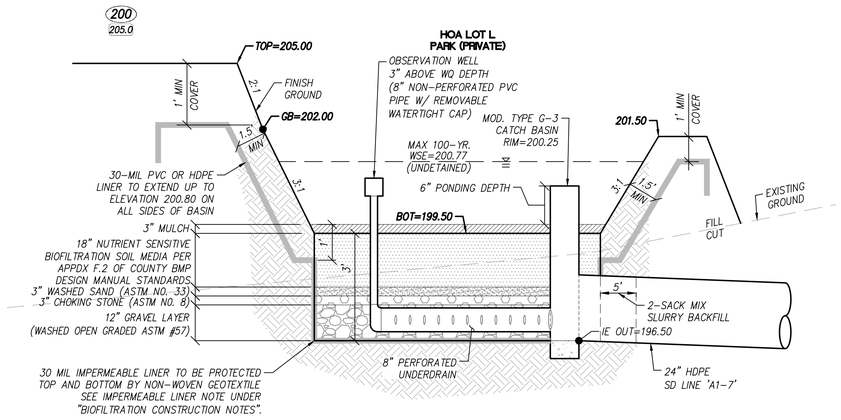


## SECTION 2G-2G: BMP 2G
## LINED BIOFILTRATION (PRIVATE)

NOT TO SCALE

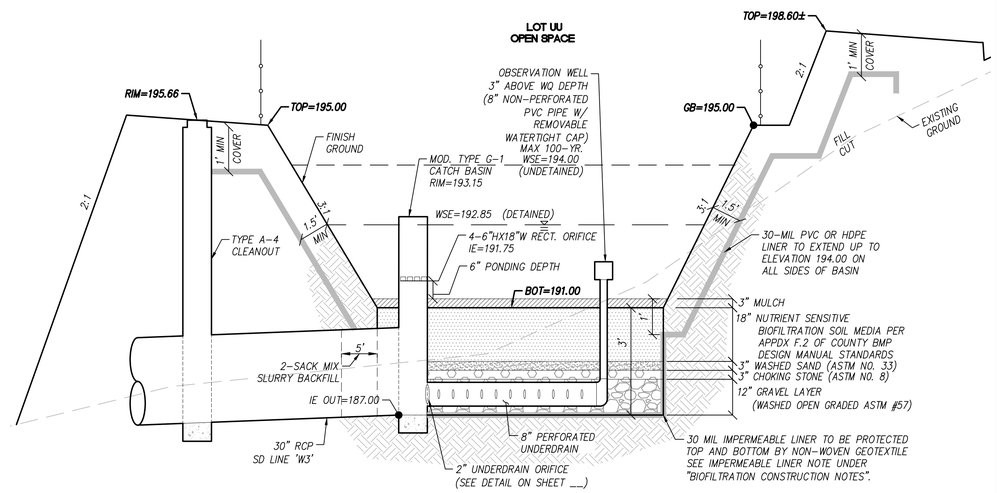


## SECTION 2H-2H: BMP 2H
## LINED BIOFILTRATION (PRIVATE)

NOT TO SCALE

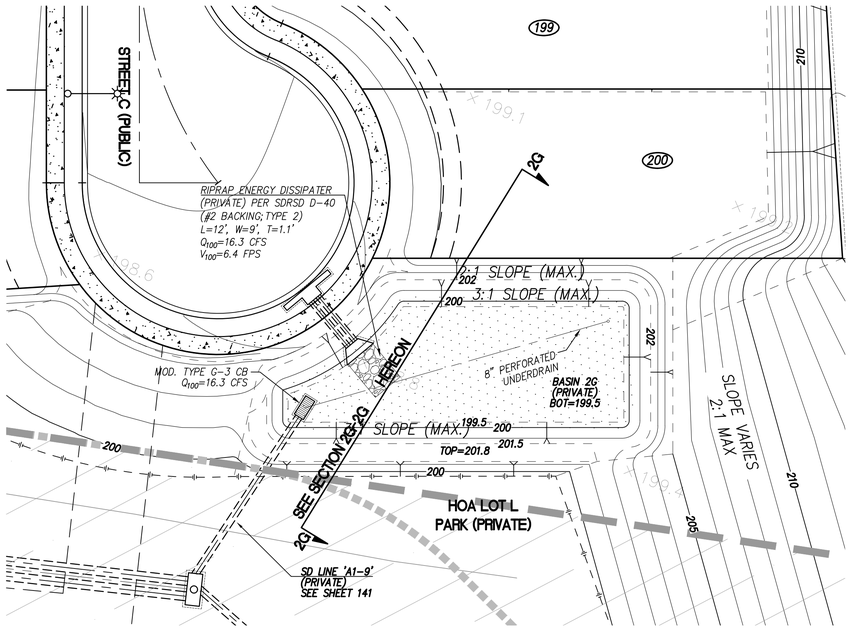


## BMP 2G
## LINED BIOFILTRATION (PRIVATE)

SCALE: 1"=20'

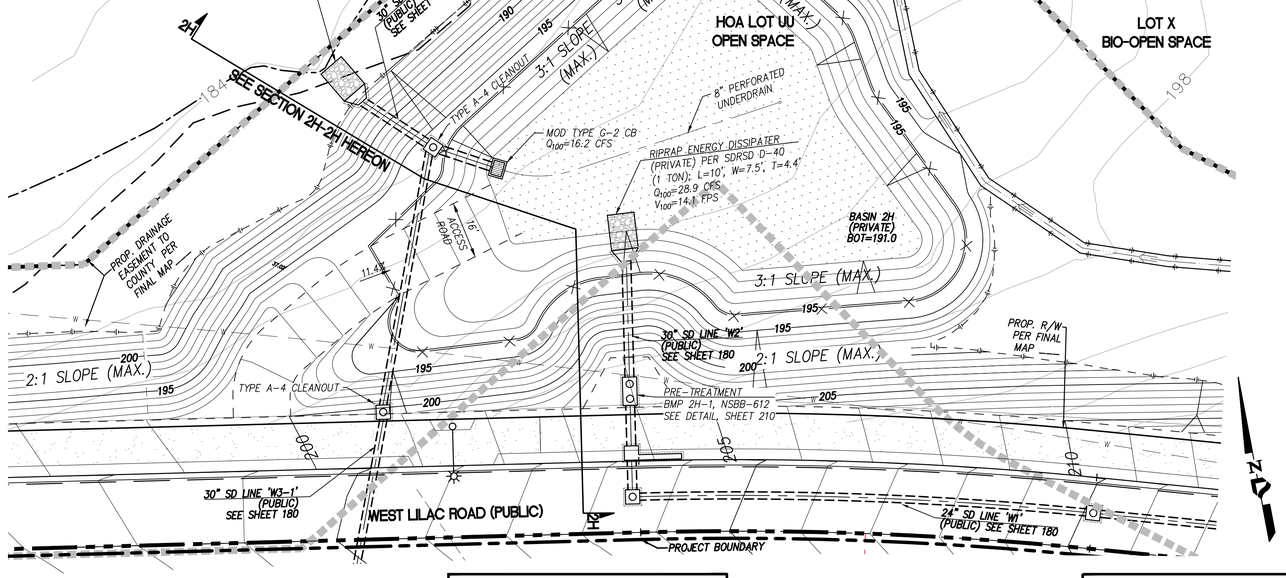


## BMP 2H
## LINED BIOFILTRATION (PRIVATE)

SCALE: 1"=20'

REGISTERED PROFESSIONAL ENGINEER
GREGORY M. SHIELDS
No. 42951
Exp. 03-31-26
CIVIL
STATE OF CALIFORNIA

Bowman
Bowman Consulting Group Ltd
701 B Street, Suite 800
San Diego, CA 92101
Phone: 619.235.6471
Bowman.com
© 2024 Bowman Consulting Group Ltd

| GREGORY M. SHIELDS, R.C.E. 42951 DATE | REGISTRATION EXPIRES 3-31-26 | DESIGNED BY: | PM REVIEW: | SURVEY REVIEW: |
|---|---|---|---|---|
| | | MC/LG | RR/IM | SS |

20 10 0 20 40 60
SCALE: 1"=20'

N

### COUNTY APPROVED CHANGES

| NO. | DESCRIPTION: | APPROVED BY: | DATE: |
|---|---|---|---|
| | | | |

### RECORD PLAN

BY: _____ DATE: _____
NAME
R.C.E. _____
EXPIRES: _____

### BENCH MARK

DESCRIPTION: FOUND 2" BRASS DISK MARKED "CALIF." "DEPT OF TRANSPORTATION" "SDGPS 03" "1991" "NE 15/76" & "1980"
LOCATION: BRASS DISK IN CONCRETE SIDEWALK ON NE CORNER BRIDGE ABUTMENT, 2.5' FROM FACE OF CURB & 2.5' FROM EXPANSION JOINT.
BRIDGE IS FOR HWY 76 AND SPANS INTERSTATE I-15.
RECORD FROM: ROS 21563
ELEVATION: 308.26
DATUM: NAVD 88

### PRIVATE CONTRACT

| SHEET 200 | COUNTY OF SAN DIEGO DEPARTMENT OF PUBLIC WORKS | 243 SHEETS |
|---|---|---|

BMP DETAILS FOR:
OCEAN BREEZE RANCH-TM 5615

CALIFORNIA COORDINATE INDEX 410-1701,410-1707,410-1713 414-1703,414-1707,414-1719 418-1713,418-1719

APPROVED FOR: WILLIAM P. MORGAN, COUNTY ENGINEER
BY: _____ DATE: _____

ENGINEER OF WORK
DATE: GREGORY SHIELDS, RCE NO. C42951, EXP. 03-31-26

PDS2020-LDGRMJ-30295
GRADING PERMIT NO:

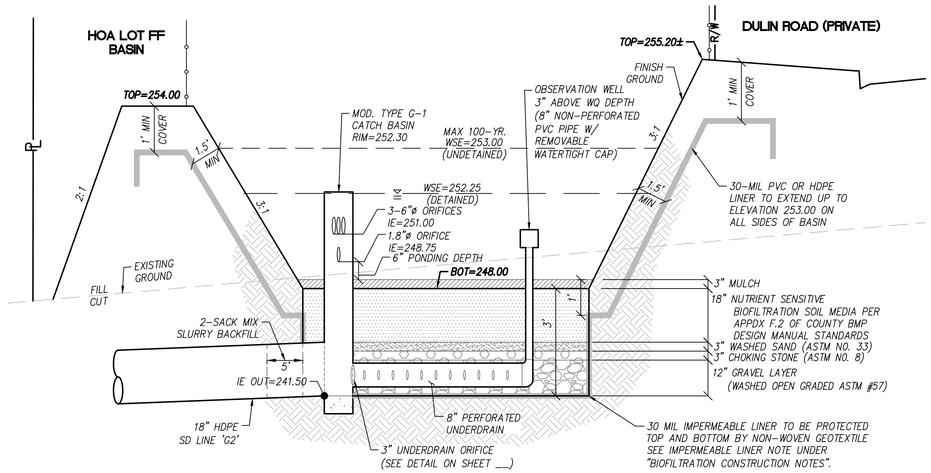


## SECTION 3A-3A: BMP 3A
## LINED BIOFILTRATION (PRIVATE)
NOT TO SCALE

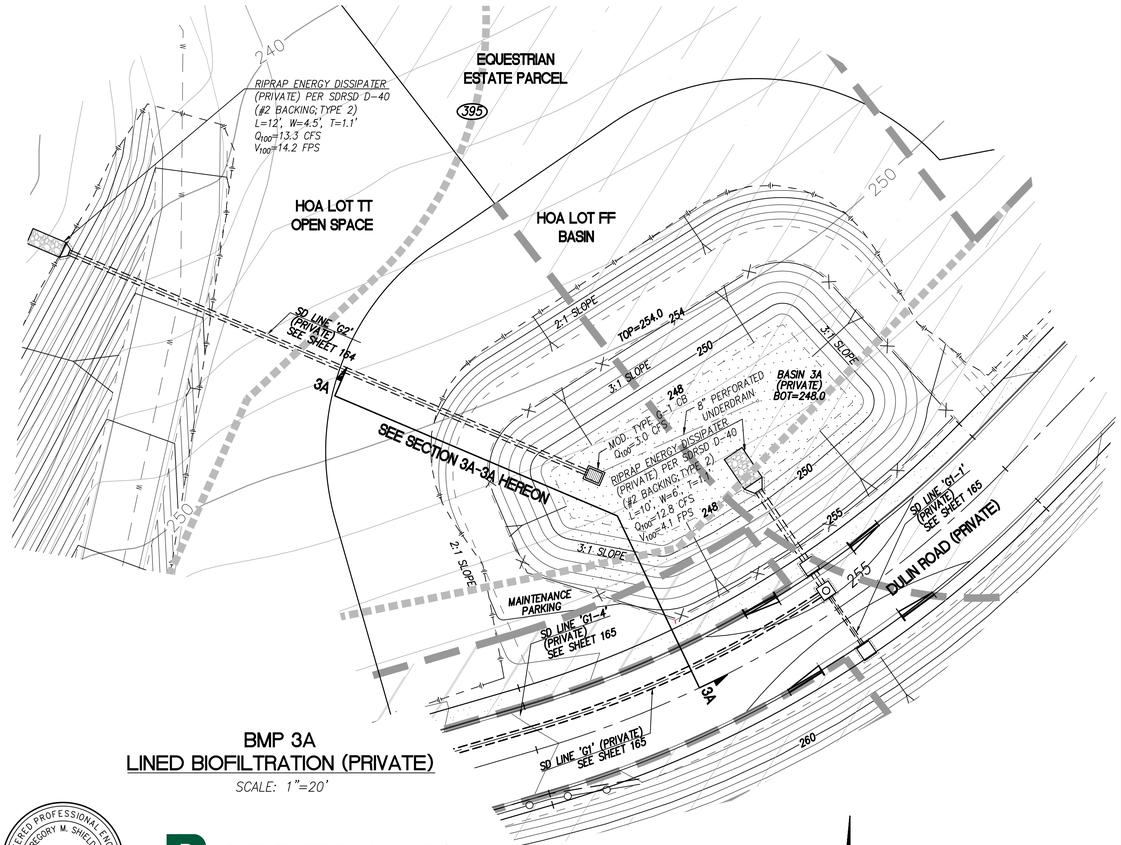


## BMP 3A
## LINED BIOFILTRATION (PRIVATE)
SCALE: 1"=20'

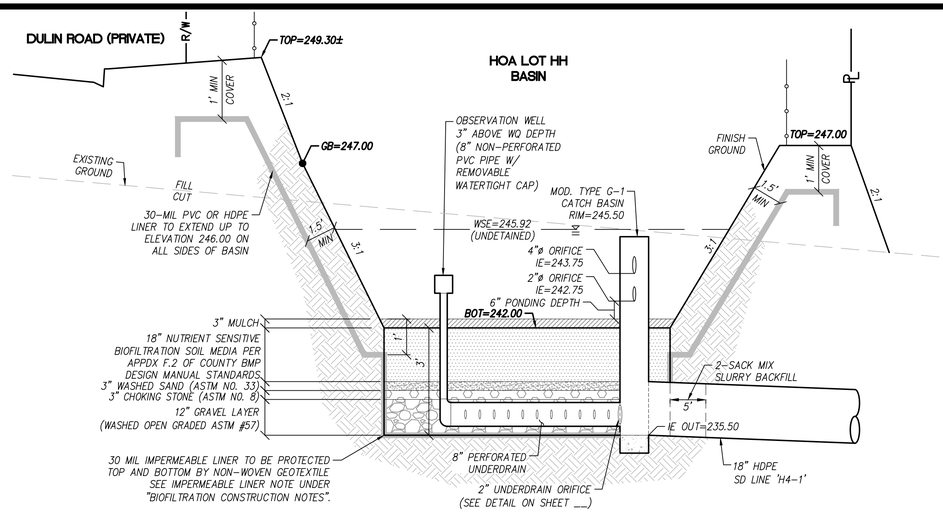


## SECTION 3B-3B: BMP 3B
## LINED BIOFILTRATION (PRIVATE)
NOT TO SCALE

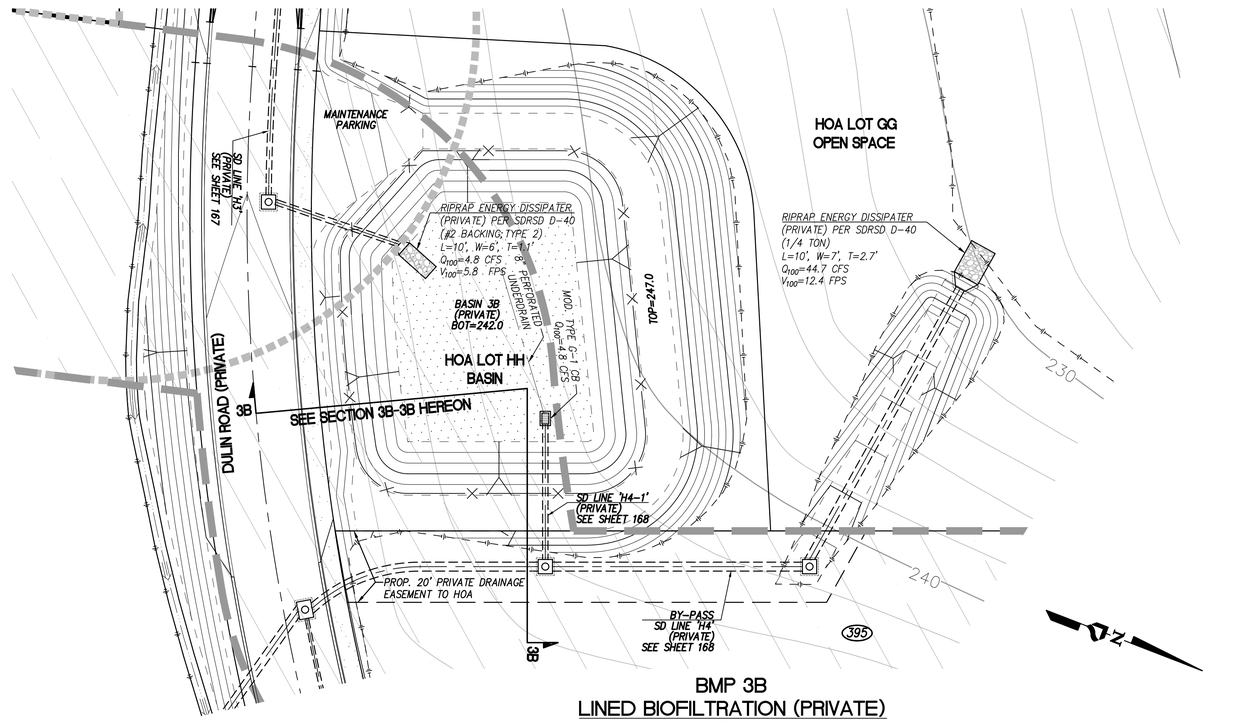


## BMP 3B
## LINED BIOFILTRATION (PRIVATE)
SCALE: 1"=20'

REGISTERED PROFESSIONAL ENGINEER
GREGORY M. SHIELDS
No. 42951
Exp. 03-31-26
CIVIL
STATE OF CALIFORNIA

Bowman
Bowman Consulting Group Ltd
701 B Street, Suite 800
San Diego, CA 92101
Phone: 619.235.6471
Bowman.com
© 2024 Bowman Consulting Group Ltd

| GREGORY M. SHIELDS, R.C.E. 42951 DATE | REGISTRATION EXPIRES 3-31-26 | DESIGNED BY: | PM REVIEW: | SURVEY REVIEW: |
|---|---|---|---|---|
| | | MC/LG | RR/IM | SS |

20 10 0 20 40 60
SCALE: 1"=20'

N

| COUNTY APPROVED CHANGES | | | |
|---|---|---|---|
| NO. | DESCRIPTION: | APPROVED BY: | DATE: |
| | | | |

**RECORD PLAN**

BY: _____ DATE: _____
NAME
R.C.E. _____
EXPIRES: _____

**BENCH MARK**

DESCRIPTION: FOUND 2" BRASS DISK MARKED "CALIF." "DEPT OF TRANSPORTATION" "SDGPS 03" "1991" "NE 15/76" & "1980"
LOCATION: BRASS DISK IN CONCRETE SIDEWALK ON NE CORNER BRIDGE ABUTMENT, 2.5' FROM FACE OF CURB & 2.5' FROM EXPANSION JOINT. BRIDGE IS FOR HWY 76 AND SPANS INTERSTATE I-15.
RECORD FROM: ROS 21563
ELEVATION: 308.26
DATUM: NAVD 88

**PRIVATE CONTRACT**

| SHEET 201 | COUNTY OF SAN DIEGO DEPARTMENT OF PUBLIC WORKS | 243 SHEETS |
|---|---|---|

BMP DETAILS FOR:
OCEAN BREEZE RANCH-TM 5615

CALIFORNIA COORDINATE INDEX: 410-1701,410-1707,410-1713 414-1703,414-1707,414-1719 418-1713,418-1719

APPROVED FOR: WILLIAM P. MORGAN, COUNTY ENGINEER
BY: _____ DATE: _____

ENGINEER OF WORK
DATE: GREGORY SHIELDS, RCE NO. C42951, EXP. 03-31-26

PDS2020-LDGRMJ-30295
GRADING PERMIT NO:

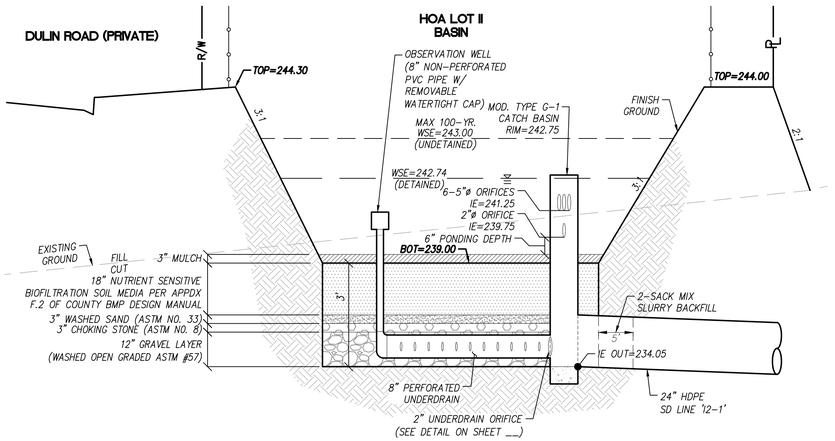


## SECTION 3C-3C: BMP 3C BIOFILTRATION W/ PARTIAL INFILTRATION (PRIVATE)

NOT TO SCALE

| SITE SPECIFIC DATA | | | |
|---|---|---|---|
| Structure ID | | | Basin 3C-1 |
| Water Quality Flow Rate (cfs) | | | 0.75 |
| Peak Flow Rate (cfs) | | | 19.00 |
| Rim Elevation | | | 244.06' |
| Top of Vault Elevation | | | 243.68' |
| **Pipe Data** | **Pipe Size** | **Pipe Type** | **Invert Elevation** |
| Inlet | 30" | HDPE | 239.15' |
| Outlet | 30" | RCP | 239.10' |
| Notes: | | | |

| PERFORMANCE SPECIFICATIONS | |
|---|---|
| Screen System Storage Volume | 55.63 cf |
| Total Sump Volume | 328.67 cf |
| NJDEP Sediment Storage Volume | 68.60 cf |
| Peak Flow Capacity* | 62.00 cfs |
| Treatment Flow Capacities:* | |
| NJDEP 50% Removal, 75 micron | 5.60 cfs |
| 80% Removal, 150 micron | 12.70 cfs |

*Contact Oldcastle for additional treatment and peak flow capacities.

**ALL PIPE ANGLES TO BE IMMEDIATELY OUTSIDE OF THE STRUCTURE, BY OTHERS.**

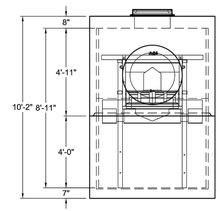


LEFT END VIEW

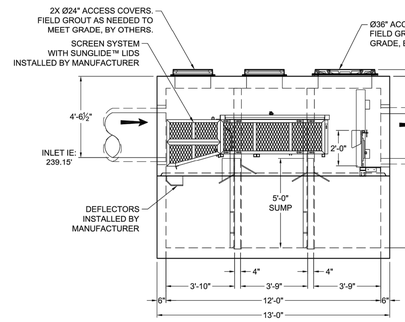


ELEVATION VIEW

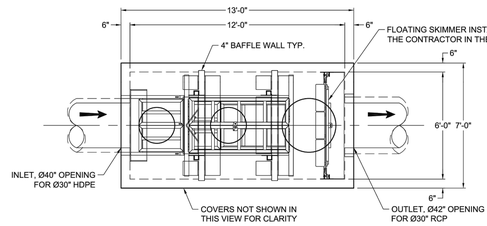


PLAN VIEW

NOTES:

1. DESIGN LOADINGS:
   A. AASHTO HS-20-44 (WITH IMPACT)
   B. DESIGN SOIL COVER: 5'-0" MAXIMUM
   C. ASSUMED WATER TABLE: BELOW BASE OF PRECAST (ENGINEER-OF-RECORD TO CONFIRM SITE WATER TABLE ELEVATION)
   D. LATERAL EARTH PRESSURE: 45 PCF (DRAINED)
   E. LATERAL LIVE LOAD SURCHARGE: 80 PSF (APPLIED TO 8'-0" BELOW GRADE)
   F. NO LATERAL SURCHARGE FROM ADJACENT BUILDINGS, WALLS, PIERS, OR FOUNDATIONS.
2. CONCRETE 28-DAY MINIMUM COMPRESSIVE STRENGTH: 5,000 PSI MINIMUM.
3. REINFORCING: REBAR, ASTM A615/A706, GRADE 60
4. CEMENT: ASTM C150
5. REQ'D ALLOWABLE SOIL BEARING CAPACITY: 2,500 PSF
6. REFERENCE STANDARD:
   A. ASTM C890
   B. ASTM C913
   C. ACI 318-14
7. THIS STRUCTURE IS DESIGNED TO THE PARAMETERS NOTED HEREIN. ENGINEER-OF-RECORD SHALL VERIFY THAT NOTED PARAMETERS MEET OR EXCEED PROJECT REQUIREMENTS. IF DESIGN PARAMETERS ARE INCORRECT, REVIEWING ENGINEER/AUTHORITY SHALL NOTIFY OLDCASTLE INFRASTRUCTURE UPON REVIEW OF THIS SUBMITTAL.
8. OVERSIZED HOLES TO ACCOMMODATE SPECIFIC PIPE TYPE MUST BE CONCENTRIC TO PIPE ID. AFTER PIPES ARE INSTALLED, ALL ANNULAR SPACES SHALL BE FILLED WITH A MINIMUM OF 3,000 PSI CONCRETE FOR FULL THICKNESS OF PRECAST WALLS. PIPES ARE TO BE FLUSH WITH THE INSIDE SURFACE OF THE CONCRETE STRUCTURE.
9. CONTRACTOR RESPONSIBLE TO VERIFY ALL SIZES, LOCATIONS, AND ELEVATIONS OF OPENINGS.
10. CONTRACTOR RESPONSIBLE TO ENSURE ADEQUATE BEARING SURFACE IS PROVIDED (I.E. COMPACTED AND LEVEL PER PROJECT SPECIFICATIONS).
11. SECTION HEIGHTS, SLABWALL THICKNESSES, AND KEYWAYS ARE SUBJECT TO CHANGE AS REQUIRED FOR SITE REQUIREMENTS AND/OR DUE TO PRODUCT AVAILABILITY AND PRODUCTION FACILITY CONSTRAINTS.
12. FOR SITE SPECIFIC DRAWINGS WITH DETAILED STRUCTURE DIMENSIONS AND WEIGHTS, PLEASE CONTACT OLDCASTLE INFRASTRUCTURE.
13. MAXIMUM PICK WEIGHT: 23,750 LBS. (* COMBINED WEIGHT INCLUDES BAFFLE WALLS AND PRODUCT INTERNALS.)
14. INTERNALS SHALL CONSIST OF A FLOATING SKIMMER, FLOW DEFLECTORS, ELEVATED CENTRAL SCREEN SYSTEM AND SLIDING LIDS. THESE COMPONENTS EFFECTIVELY REDUCE HEAD LOSS, INCREASE POLLUTANT REMOVAL AND SIMPLIFY MAINTENANCE.

- PRELIMINARY - NOT FOR CONSTRUCTION

Oldcastle Infrastructure
A CRH COMPANY
Ph: 800.579.8818 | www.oldcastleinfrastructure.com/stormwater

THIS DOCUMENT IS THE PROPERTY OF OLDCASTLE INFRASTRUCTURE, INC. IT IS CONFIDENTIAL, SUBMITTED FOR REFERENCE PURPOSES ONLY AND SHALL NOT BE USED IN ANY WAY INJURIOUS TO THE INTERESTS OF, OR IN COMPETITION WITH OLDCASTLE INFRASTRUCTURE, INC. OR ITS AFFILIATES. COPYRIGHT © 2024 OLDCASTLE INFRASTRUCTURE, INC. ALL RIGHTS RESERVED.

Nutrient Separating Baffle Box®
NSBB-612

CUSTOMER: Bowman
PROJECT NAME: Ocean Breeze Ranch (OBR) - Bonsall, CA

| DATE | SFC | DRAWN | ENGINEER | CHECKED | SALES ORDER |
|---|---|---|---|---|---|
| 6/6/24 | 070-FO | PPS | HMF | HMF | - |

DRAWING NAME: 21-603205-NSBB-612_Basin 3C-1 | REVISION: REV DATE 10/29/24 | SHEET: 1 OF 1

THIS PRODUCT IS PROTECTED BY ONE OR MORE OF THE FOLLOWING US PATENT(S): 6,428,692; 7,270,747; 7,981,283; 8,142,666; 8,366,923; 8,491,797; 7,846,327; 8,034,236; RELATED FOREIGN PATENTS, OR OTHER PATENTS PENDING.

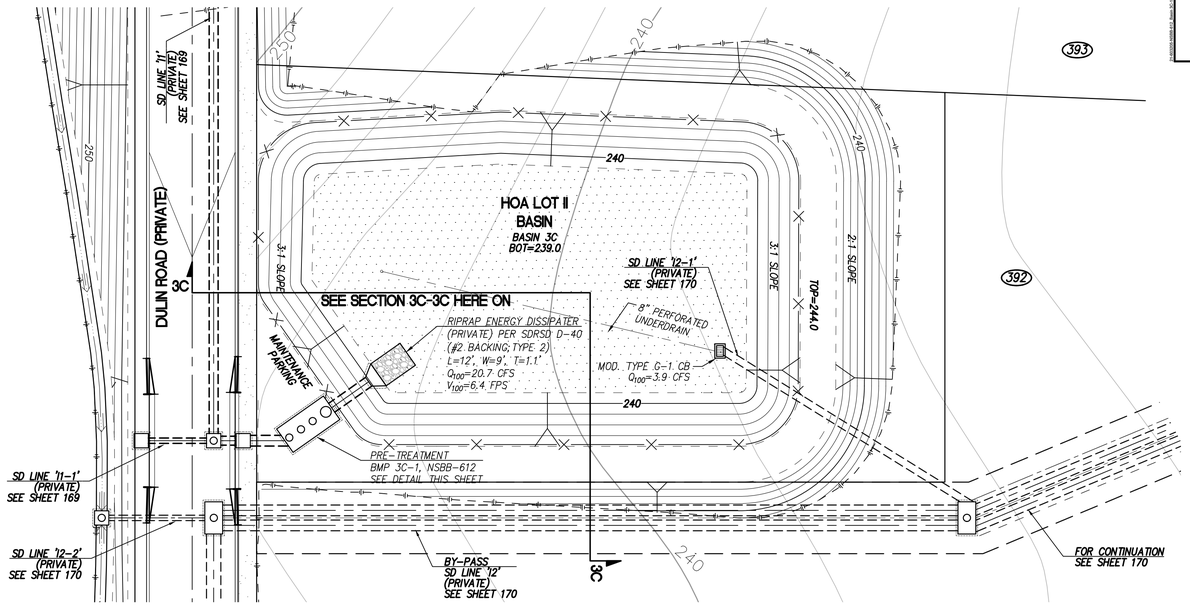


## BMP 3C BIOFILTRATION W/ PARTIAL INFILTRATION (PRIVATE)

SCALE: 1"=20'

20 10 0 20 40 60

SCALE: 1"=20'

REGISTERED PROFESSIONAL ENGINEER — GREGORY M. SHIELDS — No. 42951 — Exp. 03-31-26 — CIVIL — STATE OF CALIFORNIA

Bowman

Bowman Consulting Group Ltd
701 B Street, Suite 800
San Diego, CA 92101
Phone: 619.235.6471
Bowman.com
© 2024 Bowman Consulting Group Ltd

| GREGORY M. SHIELDS, R.C.E. 42951 | DATE | REGISTRATION EXPIRES 3-31-26 | DESIGNED BY: | PM REVIEW: | SURVEY REVIEW: |
|---|---|---|---|---|---|
| | | | MC/LG | RR/IM | SS |

N

### RECORD PLAN

BY: _____ DATE: _____
NAME
R.C.E. _____
EXPIRES: _____

### COUNTY APPROVED CHANGES

| NO. | DESCRIPTION: | APPROVED BY: | DATE: |
|---|---|---|---|
| | | | |

### BENCH MARK

DESCRIPTION: FOUND 2" BRASS DISK MARKED "CALIF." "DEPT OF TRANSPORTATION" "SDGPS 03" "1991" "NE 15/76" & "1980"
LOCATION: BRASS DISK IN CONCRETE SIDEWALK ON NE CORNER BRIDGE ABUTMENT, 2.5' FROM FACE OF CURB & 2.5' FROM EXPANSION JOINT.
BRIDGE IS FOR HWY 76 AND SPANS INTERSTATE I-15.
RECORD FROM: ROS 21563
ELEVATION: 308.26
DATUM: NAVD 88

### PRIVATE CONTRACT

| SHEET 202 | COUNTY OF SAN DIEGO DEPARTMENT OF PUBLIC WORKS | 243 SHEETS |
|---|---|---|

BMP DETAILS FOR:
OCEAN BREEZE RANCH-TM 5615

CALIFORNIA COORDINATE INDEX: 410-1701,410-1707,410-1713 414-1703,414-1707,414-1719 418-1713,418-1719

APPROVED FOR: WILLIAM P. MORGAN, COUNTY ENGINEER
BY: _____ DATE: _____

ENGINEER OF WORK
DATE: _____
GREGORY SHIELDS, RCE NO. C42951, EXP. 03-31-26

PDS2020-LDGRMJ-30295
GRADING PERMIT NO:

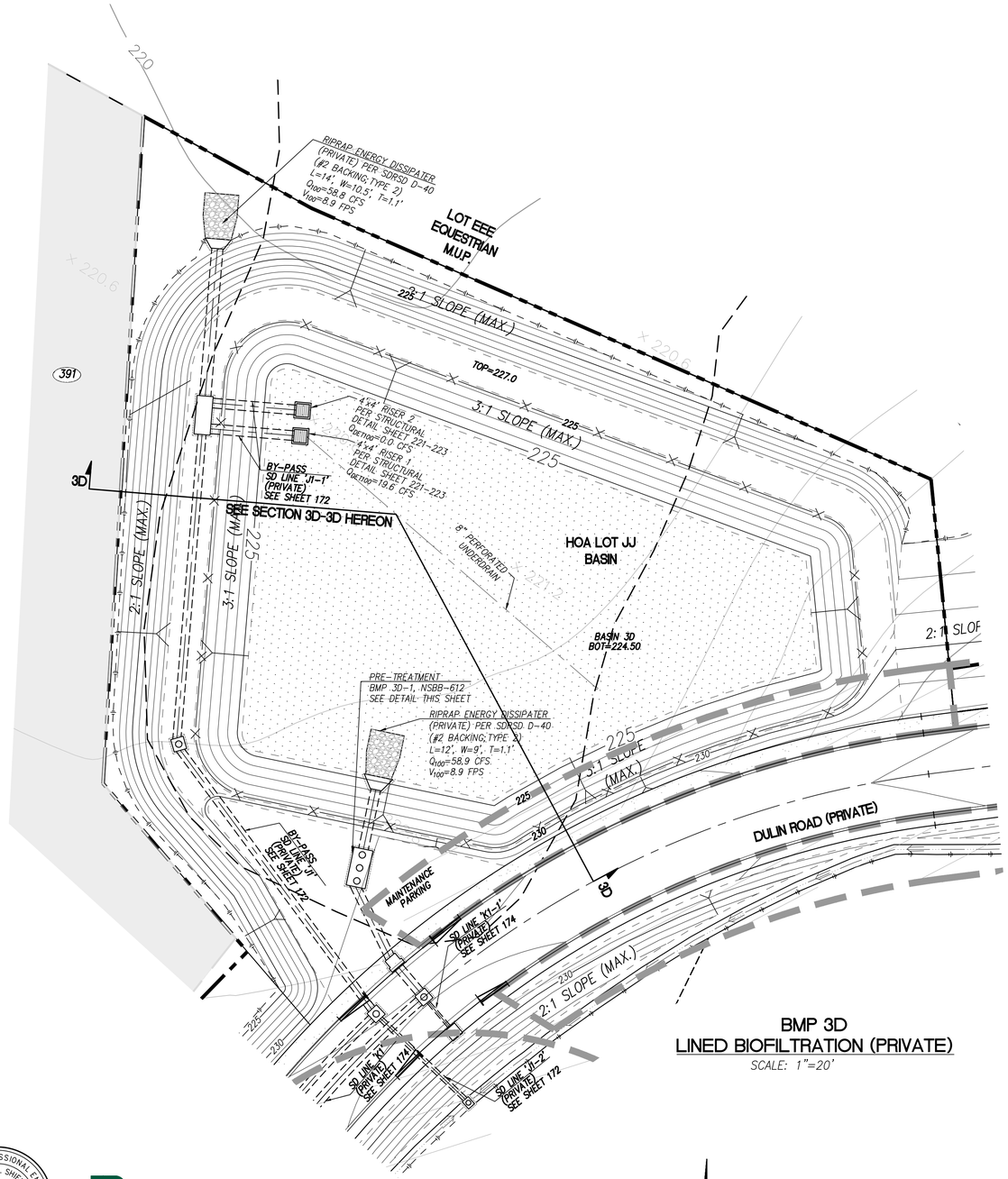


## BMP 3D
## LINED BIOFILTRATION (PRIVATE)
SCALE: 1"=20'

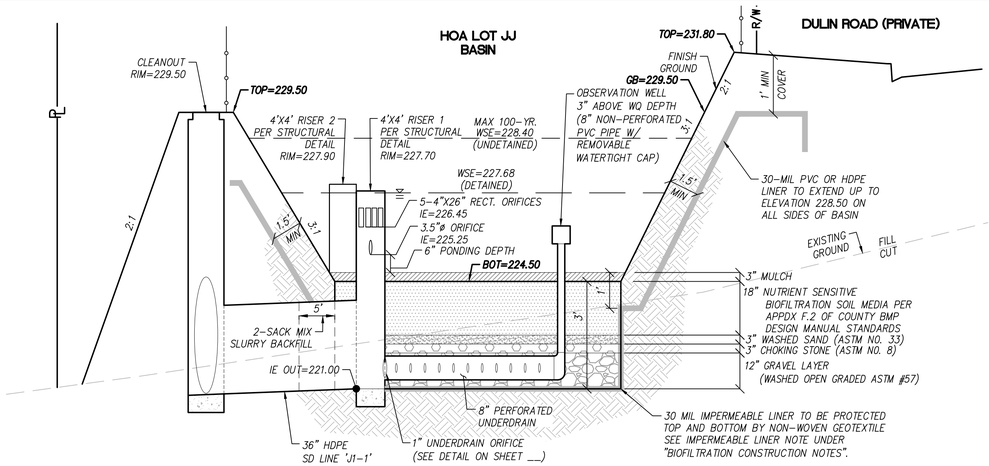


## SECTION 3D-3D: BMP 3D
## LINED BIOFILTRATION (PRIVATE)
NOT TO SCALE

| SITE SPECIFIC DATA | | | |
|---|---|---|---|
| Structure ID | | | Basin 3D-1 |
| Water Quality Flow Rate (cfs) | | | 1.73 |
| Peak Flow Rate (cfs) | | | 48.00 |
| Rim Elevation | | | 231.13' |
| Top of Vault Elevation | | | 229.48' |
| **Pipe Data** | **Pipe Size** | **Pipe Type** | **Invert Elevation** |
| Inlet | 36" | HDPE | 224.91' |
| Outlet | 36" | RCP | 224.81' |
| Notes: | | | |

| PERFORMANCE SPECIFICATIONS | |
|---|---|
| Screen System Storage Volume | 55.63 cf |
| Total Sump Volume | 328.67 cf |
| NJDEP Sediment Storage Volume | 68.60 cf |
| Peak Flow Capacity* | 62.00 cfs |
| Treatment Flow Capacities:* | |
| NJDEP 50% Removal, 75 micron | 5.60 cfs |
| 80% Removal, 150 micron | 12.70 cfs |

*Contact Oldcastle for additional treatment and peak flow capacities

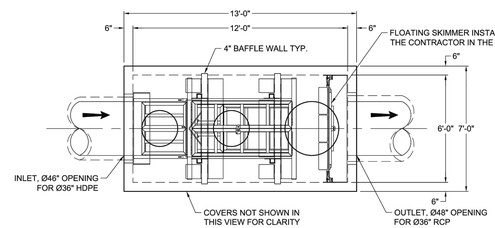


PLAN VIEW

**ALL PIPE ANGLES TO BE IMMEDIATELY OUTSIDE OF THE STRUCTURE, BY OTHERS.**

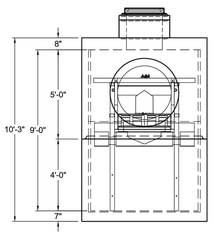


LEFT END VIEW

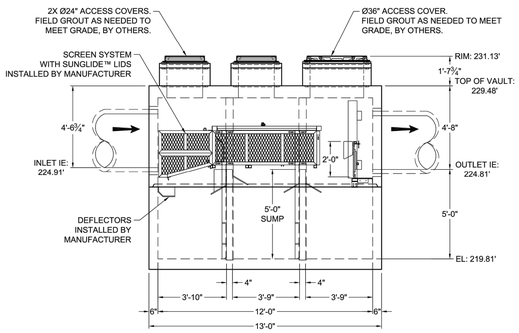


ELEVATION VIEW

THIS PRODUCT IS PROTECTED BY ONE OR MORE OF THE FOLLOWING US PATENT(S): 6,426,892; 7,270,747; 7,981,283; 8,142,666; 8,366,923; 8,491,797; 7,846,327; 8,034,236; RELATED FOREIGN PATENTS, OR OTHER PATENTS PENDING.

NOTES:

1. DESIGN LOADINGS:
   A. AASHTO HS-20-44 (WITH IMPACT)
   B. DESIGN SOIL COVER: 5'-0" MAXIMUM
   C. ASSUMED WATER TABLE: BELOW BASE OF PRECAST (ENGINEER-OF-RECORD TO CONFIRM SITE WATER TABLE ELEVATION)
   D. LATERAL EARTH PRESSURE: 45 PCF (DRAINED)
   E. LATERAL LIVE LOAD SURCHARGE: 80 PSF (APPLIED TO 8'-0" BELOW GRADE)
   F. NO LATERAL SURCHARGE FROM ADJACENT BUILDINGS, WALLS, PIERS, OR FOUNDATIONS.
2. CONCRETE 28-DAY MINIMUM COMPRESSIVE STRENGTH: 5,000 PSI MINIMUM.
3. REINFORCING: REBAR, ASTM A615/A706, GRADE 60
4. CEMENT: ASTM C150
5. REQ'D ALLOWABLE SOIL BEARING CAPACITY: 2,500 PSF
6. REFERENCE STANDARD:
   A. ASTM C890
   B. ASTM C913
   C. ACI 318-14
7. THIS STRUCTURE IS DESIGNED TO THE PARAMETERS NOTED HEREIN. ENGINEER-OF-RECORD SHALL VERIFY THAT NOTED PARAMETERS MEET OR EXCEED PROJECT REQUIREMENTS. IF DESIGN PARAMETERS ARE INCORRECT, REVIEWING ENGINEER/AUTHORITY SHALL NOTIFY OLDCASTLE INFRASTRUCTURE UPON REVIEW OF THIS SUBMITTAL.
8. OVERSIZED HOLES TO ACCOMMODATE SPECIFIC PIPE TYPE MUST BE CONCENTRIC TO PIPE ID. AFTER PIPES ARE INSTALLED, ALL ANNULAR SPACES SHALL BE FILLED WITH A MINIMUM OF 3,000 PSI CONCRETE FOR FULL THICKNESS OF PRECAST WALLS. PIPES ARE TO BE FLUSH WITH THE INSIDE SURFACE OF THE CONCRETE STRUCTURE.
9. CONTRACTOR RESPONSIBLE TO VERIFY ALL SIZES, LOCATIONS, AND ELEVATIONS OF OPENINGS.
10. CONTRACTOR RESPONSIBLE TO ENSURE ADEQUATE BEARING SURFACE IS PROVIDED (I.E. COMPACTED AND LEVEL PER PROJECT SPECIFICATIONS).
11. SECTION HEIGHTS, SLAB/WALL THICKNESSES, AND KEYWAYS ARE SUBJECT TO CHANGE AS REQUIRED FOR SITE REQUIREMENTS AND/OR DUE TO PRODUCT AVAILABILITY AND PRODUCTION FACILITY CONSTRAINTS.
12. FOR SITE SPECIFIC DRAWINGS WITH DETAILED STRUCTURE DIMENSIONS AND WEIGHTS, PLEASE CONTACT OLDCASTLE INFRASTRUCTURE.
13. MAXIMUM PICK WEIGHT: 23,750 LBS. (* COMBINED WEIGHT INCLUDES BAFFLE WALLS AND PRODUCT INTERNALS.)
14. INTERNALS SHALL CONSIST OF A FLOATING SKIMMER, FLOW DEFLECTORS, ELEVATED CENTRAL SCREEN SYSTEM AND SLIDING LIDS. THESE COMPONENTS EFFECTIVELY REDUCE HEAD LOSS, INCREASE POLLUTANT REMOVAL AND SIMPLIFY MAINTENANCE.

- PRELIMINARY -
NOT FOR CONSTRUCTION

Oldcastle Infrastructure
A CRH COMPANY

THIS DOCUMENT, THE PROPERTY OF OLDCASTLE INFRASTRUCTURE, INC., IS CONFIDENTIAL, SUBMITTED FOR REFERENCE PURPOSES ONLY AND SHALL NOT BE USED IN ANY WAY INJURIOUS TO THE INTERESTS OF, OR IN COMPETITION WITH OLDCASTLE INFRASTRUCTURE, INC. COPYRIGHT © 2024 OLDCASTLE INFRASTRUCTURE, INC. ALL RIGHTS RESERVED.

Nutrient Separating Baffle Box®
NSBB-612

| | |
|---|---|
| CUSTOMER | Bowman |
| PROJECT NAME | Ocean Breeze Ranch (OBR) - Bonsall, CA |

| DATE | MFG | DRAWN | ENGINEER | CHECKED | SALES ORDER |
|---|---|---|---|---|---|
| 6/6/24 | STO-FO | PPS | HMF | HMF | - |
| SHEET NAME | | | REVISION | SHEET | |
| 21-603205-NSBB-612_Basin 3D-1 | | | REV DATE SCBOX | 1 OF 1 | |

GREGORY M. SHIELDS
REGISTERED PROFESSIONAL ENGINEER
No. 42951
Exp. 03-31-26
CIVIL
STATE OF CALIFORNIA

Bowman
Bowman Consulting Group Ltd
701 B Street, Suite 800
San Diego, CA 92101
Phone: 619.235.6471
Bowman.com
© 2024 Bowman Consulting Group Ltd

| GREGORY M. SHIELDS, R.C.E. 42951 | DATE | REGISTRATION EXPIRES 3-31-26 | DESIGNED BY: | PM REVIEW: | SURVEY REVIEW: |
|---|---|---|---|---|---|
| | | | MC/LG | RR/IM | SS |

20 10 0 20 40 60
SCALE: 1"=20'

N

### COUNTY APPROVED CHANGES

| NO. | DESCRIPTION: | APPROVED BY: | DATE: |
|---|---|---|---|
| | | | |

### RECORD PLAN

BY: _____ DATE: _____
NAME
R.C.E. _____
EXPIRES: _____

### BENCH MARK

DESCRIPTION: FOUND 2" BRASS DISK MARKED "CALIF." "DEPT OF TRANSPORTATION" "SDGPS 03" "1991" "NE 15/76" & "1980"
LOCATION: BRASS DISK IN CONCRETE SIDEWALK ON NE CORNER BRIDGE ABUTMENT, 2.5' FROM FACE OF CURB & 2.5' FROM EXPANSION JOINT.
BRIDGE IS FOR HWY 76 AND SPANS INTERSTATE I-15.
RECORD FROM: ROS 21563
ELEVATION: 308.26
DATUM: NAVD 88

### PRIVATE CONTRACT

| SHEET 203 | COUNTY OF SAN DIEGO DEPARTMENT OF PUBLIC WORKS | 243 SHEETS |
|---|---|---|

BMP DETAILS FOR:
OCEAN BREEZE RANCH-TM 5615

CALIFORNIA COORDINATE INDEX 410-1701,410-1707,410-1713 414-1701,414-1707,414-1719 418-1713,418-1719

APPROVED FOR: WILLIAM P. MORGAN, COUNTY ENGINEER
BY: _____ DATE: _____

ENGINEER OF WORK
DATE: GREGORY SHIELDS, RCE NO. C42951, EXP. 03-31-26

PDS2020-LDGRMJ-30295
GRADING PERMIT NO:

*Last save by LOURDES GARCIA, File Name Q:\CA-SAND-PD\Projects\4192.10\Engr\DWG_Plans\Grading Rough\7 BMP SHEETS\4192.10 0195_RG-BMP.dwg, Date Last Saved 11/7/2024 9:38:02 AM, Date Plotted Last 11/7/2024 4:18:12 PM*

Q:\CA-SAND-PD\Projects\4192.10\Engr\DWG_Plans\Grading Rough\7 BMP SHEETS\4192.10 0195_RG-BMP.dwg, 11/7/2024 4:17:04 PM, _AutoCAD PDF (General Documentation).pc3

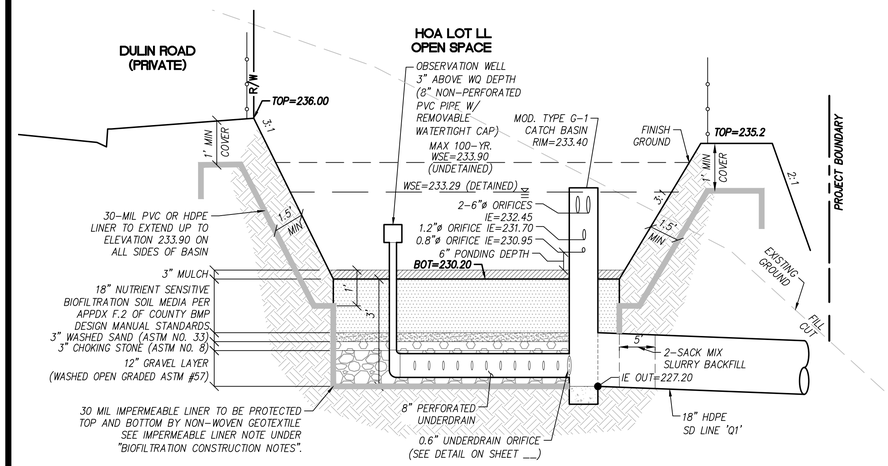


## SECTION 3E-3E: BMP 3E
## LINED BIOFILTRATION (PRIVATE)
NOT TO SCALE

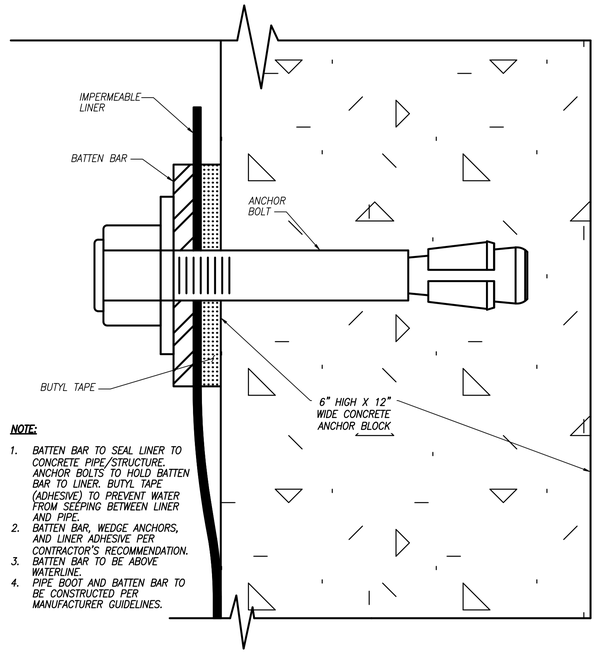


**NOTE:**

1. BATTEN BAR TO SEAL LINER TO CONCRETE PIPE/STRUCTURE. ANCHOR BOLTS TO HOLD BATTEN BAR TO LINER. BUTYL TAPE (ADHESIVE) TO PREVENT WATER FROM SEEPING BETWEEN LINER AND PIPE.
2. BATTEN BAR, WEDGE ANCHORS, AND LINER ADHESIVE PER CONTRACTOR'S RECOMMENDATION.
3. BATTEN BAR TO BE ABOVE WATERLINE.
4. PIPE BOOT AND BATTEN BAR TO BE CONSTRUCTED PER MANUFACTURER GUIDELINES.

## BATTEN BAR SECTION DETAIL
NOT TO SCALE

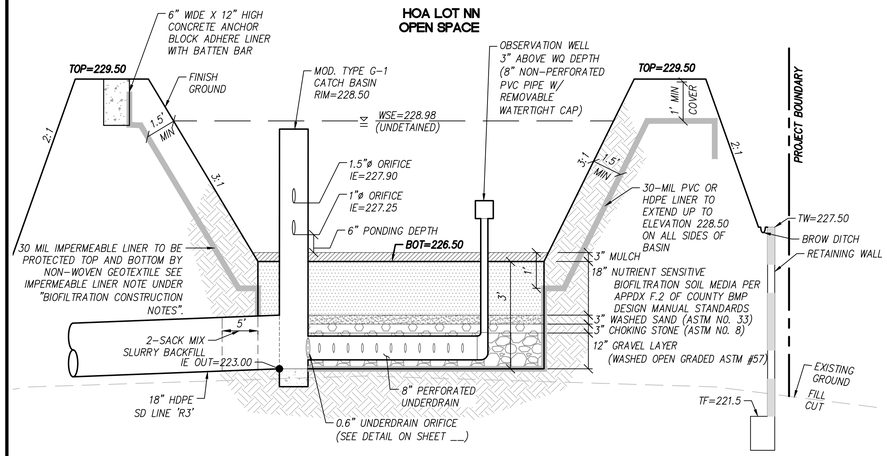


## SECTION 3F-3F: BMP 3F
## LINED BIOFILTRATION (PRIVATE)
NOT TO SCALE

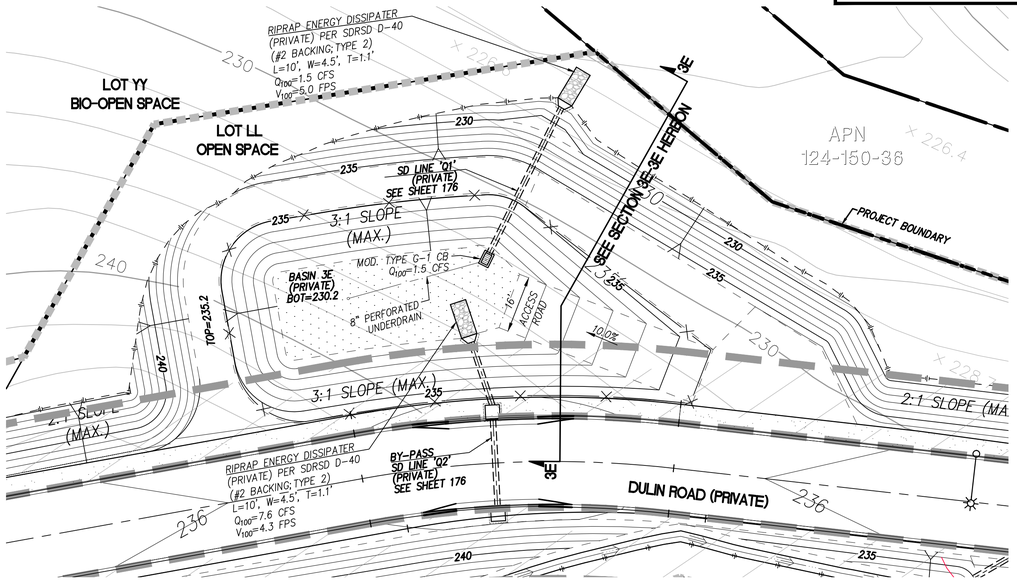


## BMP 3E
## LINED BIOFILTRATION (PRIVATE)
SCALE: 1"=20'

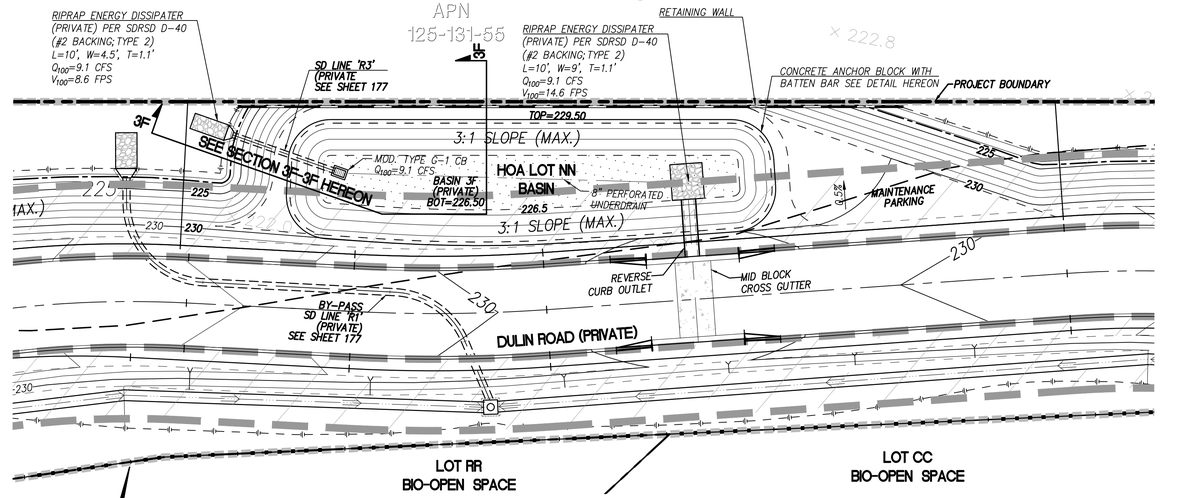


## BMP 3F
## LINED BIOFILTRATION (PRIVATE)
SCALE: 1"=20'

REGISTERED PROFESSIONAL ENGINEER
GREGORY M. SHIELDS
No. 42951
Exp. 03-31-26
CIVIL
STATE OF CALIFORNIA

Bowman

Bowman Consulting Group Ltd
701 B Street, Suite 800
San Diego, CA 92101

Phone: 619.235.6471
Bowman.com
© 2024 Bowman Consulting Group Ltd

| GREGORY M. SHIELDS, R.C.E. 42951 DATE REGISTRATION EXPIRES 3-31-26 | DESIGNED BY: | PM REVIEW: | SURVEY REVIEW: |
|---|---|---|---|
| | MC/LG | RR/IM | SS |

20 10 0 20 40 60
SCALE: 1"=20'

N

### COUNTY APPROVED CHANGES

| NO. | DESCRIPTION: | APPROVED BY: | DATE: |
|---|---|---|---|
| | | | |

### RECORD PLAN

BY: _____ DATE: _____
NAME
R.C.E. _____
EXPIRES: _____

### BENCH MARK

DESCRIPTION: FOUND 2" BRASS DISK MARKED "CALIF." "DEPT OF TRANSPORTATION" "SDGPS 03" "1991" "NE 15/76" & "1980"
LOCATION: BRASS DISK IN CONCRETE SIDEWALK ON NE CORNER BRIDGE ABUTMENT, 2.5' FROM FACE OF CURB & 2.5' FROM EXPANSION JOINT. BRIDGE IS FOR HWY 76 AND SPANS INTERSTATE I-15.
RECORD FROM: ROS 21563
ELEVATION: 308.26
DATUM: NAVD 88

### PRIVATE CONTRACT

| SHEET 204 | COUNTY OF SAN DIEGO DEPARTMENT OF PUBLIC WORKS | 243 SHEETS |
|---|---|---|

BMP DETAILS FOR:
OCEAN BREEZE RANCH-TM 5615

CALIFORNIA COORDINATE INDEX 410-1701,410-1707,410-1713 414-1703,414-1707,414-1719 418-1713,418-1719

APPROVED FOR: WILLIAM P. MORGAN, COUNTY ENGINEER
BY: _____ DATE: _____

ENGINEER OF WORK
DATE:
GREGORY SHIELDS, RCE NO. C42951, EXP. 03-31-26

PDS2020-LDGRMJ-30295
GRADING PERMIT NO:

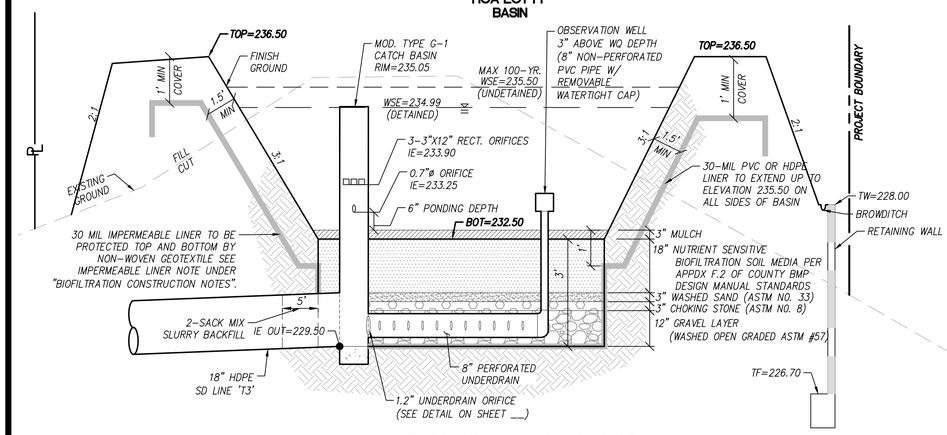


## SECTION 3G-3G: BMP 3G
## LINED BIOFILTRATION (PRIVATE)
NOT TO SCALE

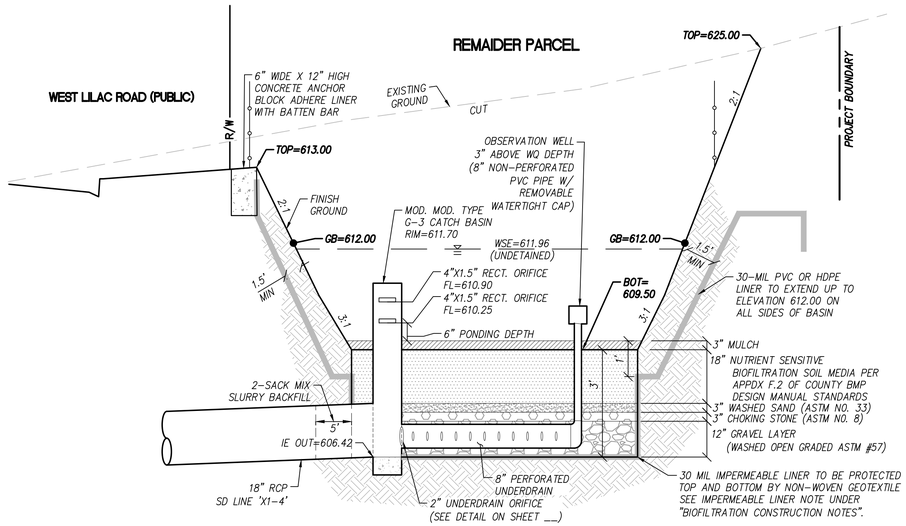


## SECTION 3H-3H: BMP 3H
## LINED BIOFILTRATION (PRIVATE)
NOT TO SCALE

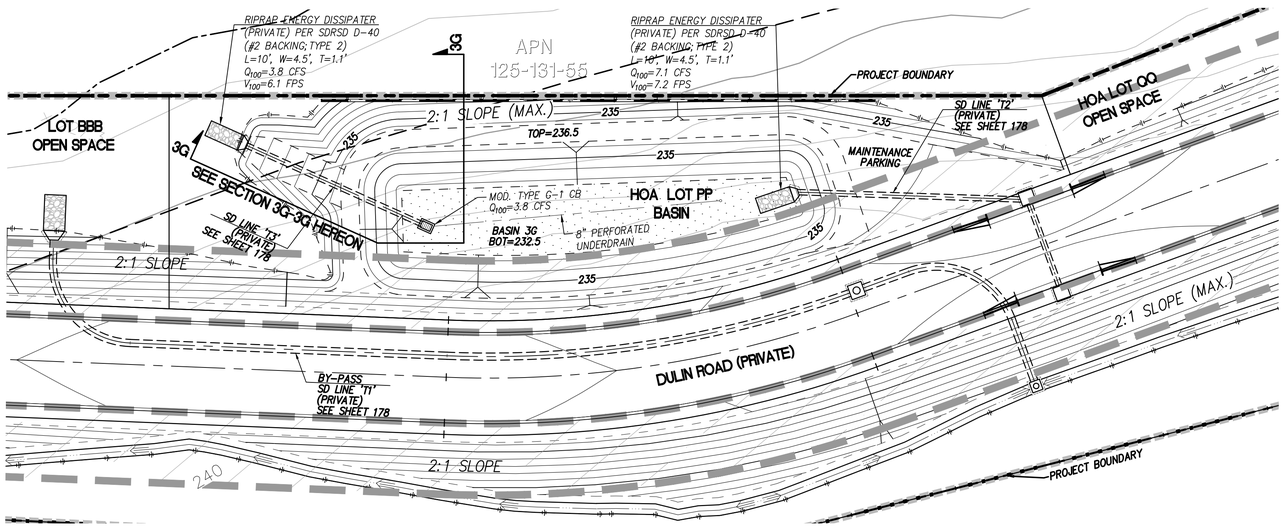


## BMP 3G
## LINED BIO-FILTRATION (PRIVATE)
SCALE: 1"=20'

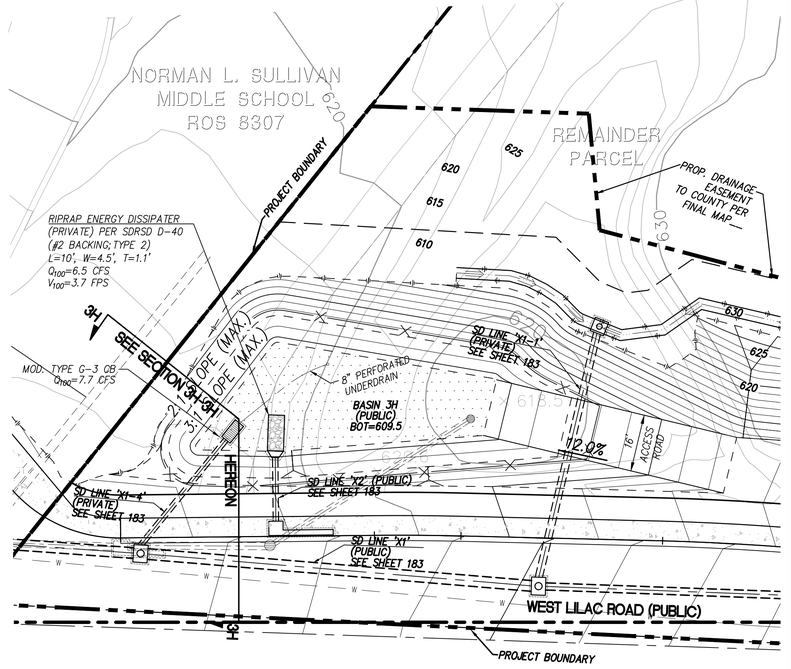


## BMP 3H
## LINED BIO-FILTRATION (PRIVATE)
SCALE: 1"=20'

REGISTERED PROFESSIONAL ENGINEER — GREGORY M. SHIELDS — No. 42951 — Exp. 03-31-26 — CIVIL — STATE OF CALIFORNIA

Bowman
Bowman Consulting Group Ltd
701 B Street, Suite 800
San Diego, CA 92101
Phone: 619.235.6471
Bowman.com
© 2024 Bowman Consulting Group Ltd

| GREGORY M. SHIELDS, R.C.E. 42951 | DATE REGISTRATION EXPIRES 3-31-26 | DESIGNED BY: | PM REVIEW: | SURVEY REVIEW: |
|---|---|---|---|---|
| | | MC/LG | RR/IM | SS |

20 10 0 20 40 60
SCALE: 1"=20'

N

**RECORD PLAN**

BY: _____ DATE: _____
NAME
R.C.E. _____
EXPIRES: _____

**COUNTY APPROVED CHANGES**

| NO. | DESCRIPTION: | APPROVED BY: | DATE: |
|---|---|---|---|
| | | | |

**BENCH MARK**

DESCRIPTION: FOUND 2" BRASS DISK MARKED "CALIF." "DEPT OF TRANSPORTATION" "SDGPS 03" "1991" "NE 15/76" & "1980"
LOCATION: BRASS DISK IN CONCRETE SIDEWALK ON NE CORNER BRIDGE ABUTMENT, 2.5' FROM FACE OF CURB & 2.5' FROM EXPANSION JOINT. BRIDGE IS FOR HWY 76 AND SPANS INTERSTATE I-15.
RECORD FROM: ROS 21563
ELEVATION: 308.26
DATUM: NAVD 88

**PRIVATE CONTRACT**

| SHEET 205 | COUNTY OF SAN DIEGO DEPARTMENT OF PUBLIC WORKS | 243 SHEETS |
|---|---|---|

BMP DETAILS FOR:
OCEAN BREEZE RANCH-TM 5615

CALIFORNIA COORDINATE INDEX 410-1701,410-1707,410-1713 414-1703,414-1707,414-1719 418-1713,418-1719

APPROVED FOR: WILLIAM P. MORGAN, COUNTY ENGINEER
BY: _____ DATE: _____

ENGINEER OF WORK
DATE: _____
GREGORY SHIELDS, RCE NO. C42951, EXP. 03-31-26

PDS2020-LDGRMJ-30295
GRADING PERMIT NO:

Last save by LOURDES GARCIA, File Name Q:\CA-SAND-PD\Projects\4192.10\Engr\DWG_Plans\Grading Rough\7 BMP SHEETS\4192.10 0197_RG-BMP.dwg, Date Last Saved 11/5/2024 5:10:32 PM, Date Plotted Last 11/7/2024 4:25:12 PM

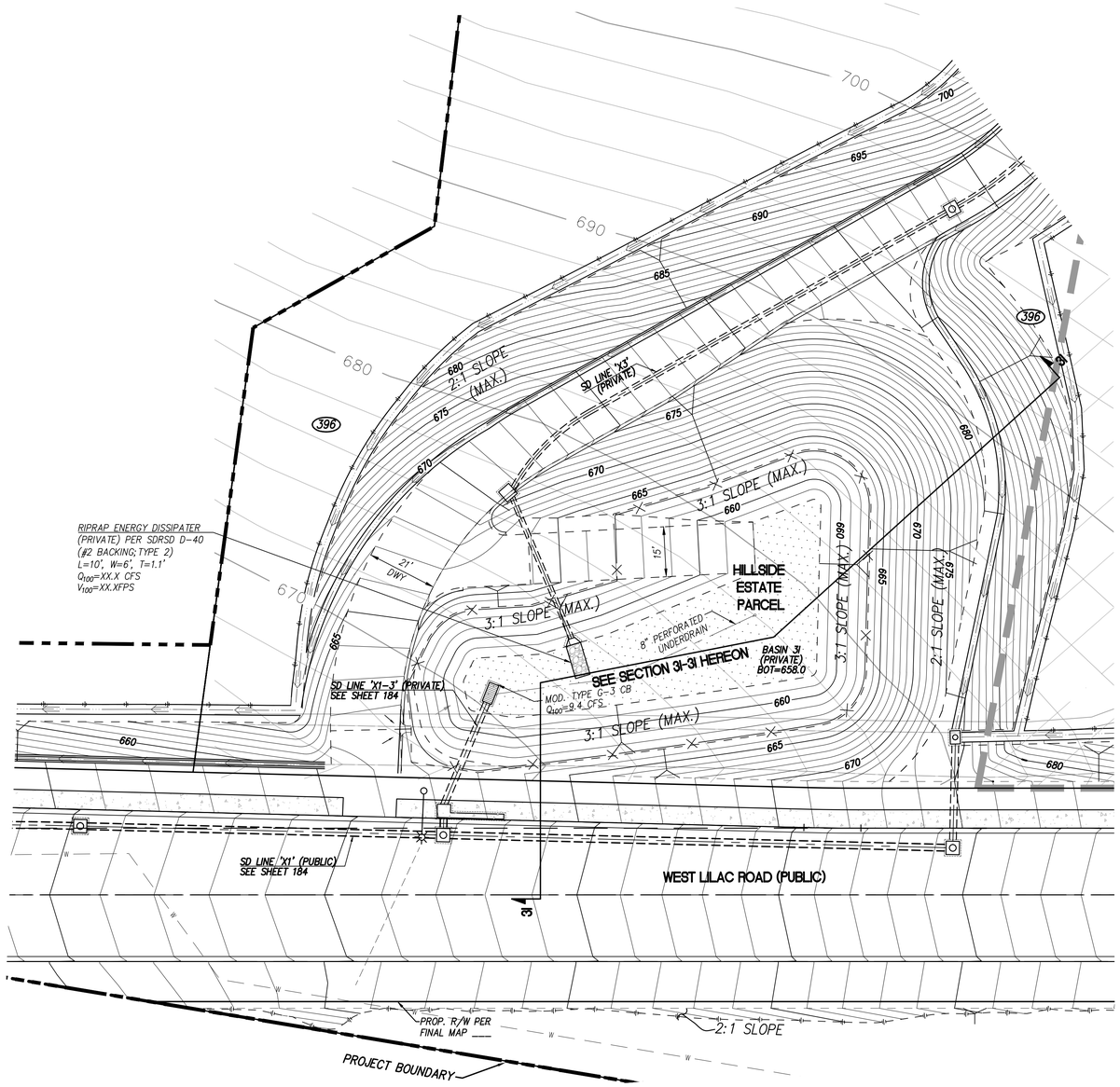


BMP 3I
LINED BIO-FILTRATION (PRIVATE)
SCALE: 1"=20'

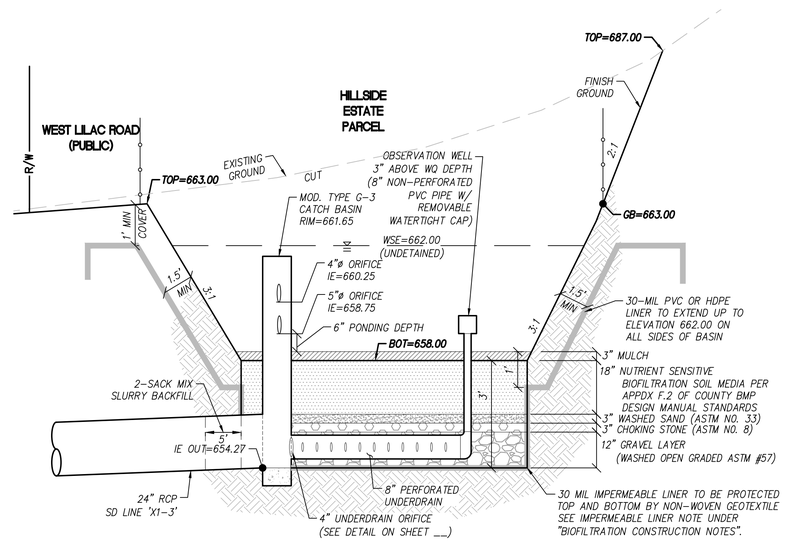


SECTION 3I-3I: BMP 3I
LINED BIOFILTRATION (PRIVATE)
NOT TO SCALE

REGISTERED PROFESSIONAL ENGINEER
GREGORY M. SHIELDS
No. 42951
Exp. 03-31-26
CIVIL
STATE OF CALIFORNIA

Bowman

Bowman Consulting Group Ltd
701 B Street, Suite 800
San Diego, CA 92101

Phone: 619.235.6471
Bowman.com
© 2024 Bowman Consulting Group Ltd

| GREGORY M. SHIELDS, R.C.E. 42951 DATE REGISTRATION EXPIRES 3-31-26 | DESIGNED BY: | PM REVIEW: | SURVEY REVIEW: |
|---|---|---|---|
| | MC/LG | RR/IM | SS |

20 10 0 20 40 60
SCALE: 1"=20'

N

**RECORD PLAN**

BY: _____ DATE: _____
NAME
R.C.E. _____
EXPIRES: _____

**COUNTY APPROVED CHANGES**

| NO. | DESCRIPTION: | APPROVED BY: | DATE: |
|---|---|---|---|
| | | | |

**BENCH MARK**

DESCRIPTION: FOUND 2" BRASS DISK MARKED "CALIF." "DEPT OF TRANSPORTATION" "SDGPS 03" "1991" "NE 15/76" & "1980"
LOCATION: BRASS DISK IN CONCRETE SIDEWALK ON NE CORNER BRIDGE ABUTMENT, 2.5' FROM FACE OF CURB & 2.5' FROM EXPANSION JOINT.
BRIDGE IS FOR HWY 76 AND SPANS INTERSTATE I-15.
RECORD FROM: ROS 21563
ELEVATION: 308.26
DATUM: NAVD 88

**PRIVATE CONTRACT**

| SHEET 206 | COUNTY OF SAN DIEGO DEPARTMENT OF PUBLIC WORKS | 243 SHEETS |
|---|---|---|

BMP DETAILS FOR:
OCEAN BREEZE RANCH-TM 5615

CALIFORNIA COORDINATE INDEX 410-1701,410-1707,410-1713 414-1703,414-1707,414-1719 418-1713,418-1719

APPROVED FOR: WILLIAM P. MORGAN, COUNTY ENGINEER
BY: _____ DATE: _____

ENGINEER OF WORK
DATE: GREGORY SHIELDS, RCE NO. C42951, EXP. 03-31-26

PDS2020-LDGRMJ-30295
GRADING PERMIT NO:

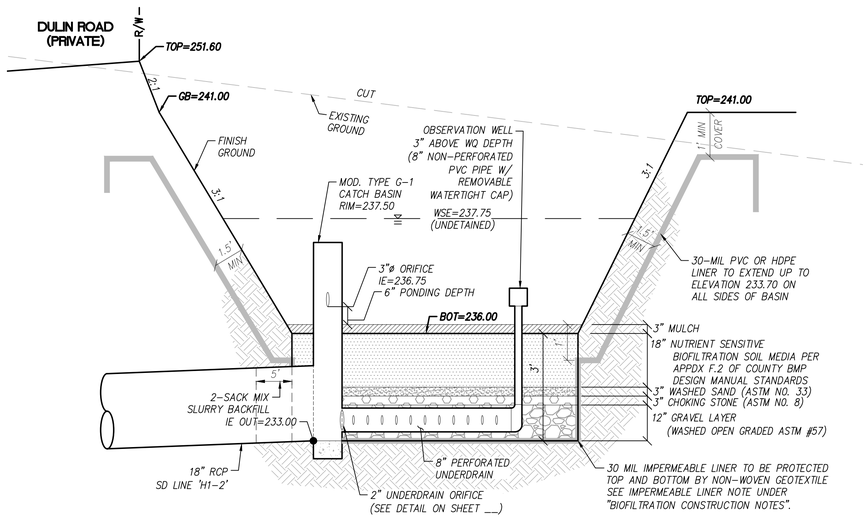


## SECTION 3J-3J: BMP 3J
## LINED BIOFILTRATION (PRIVATE)
NOT TO SCALE

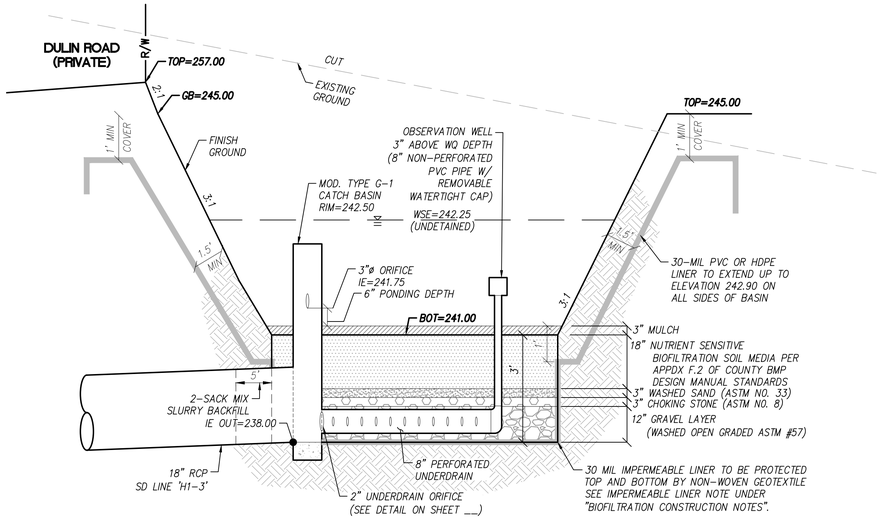


## SECTION 3K-3K: BMP 3K
## LINED BIOFILTRATION (PRIVATE)
NOT TO SCALE

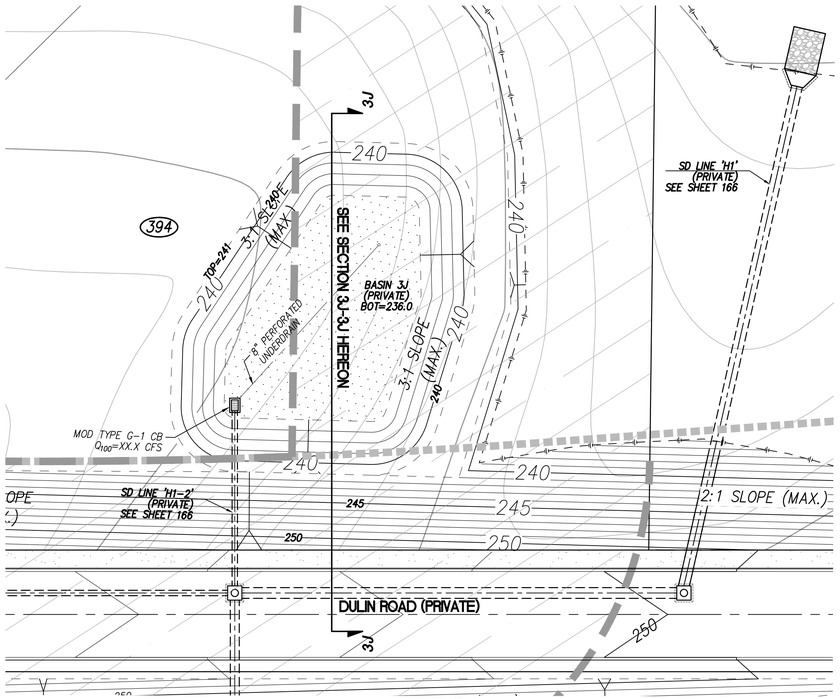


## BMP 3J
## LINED BIO-FILTRATION (PRIVATE)
SCALE: 1"=20'

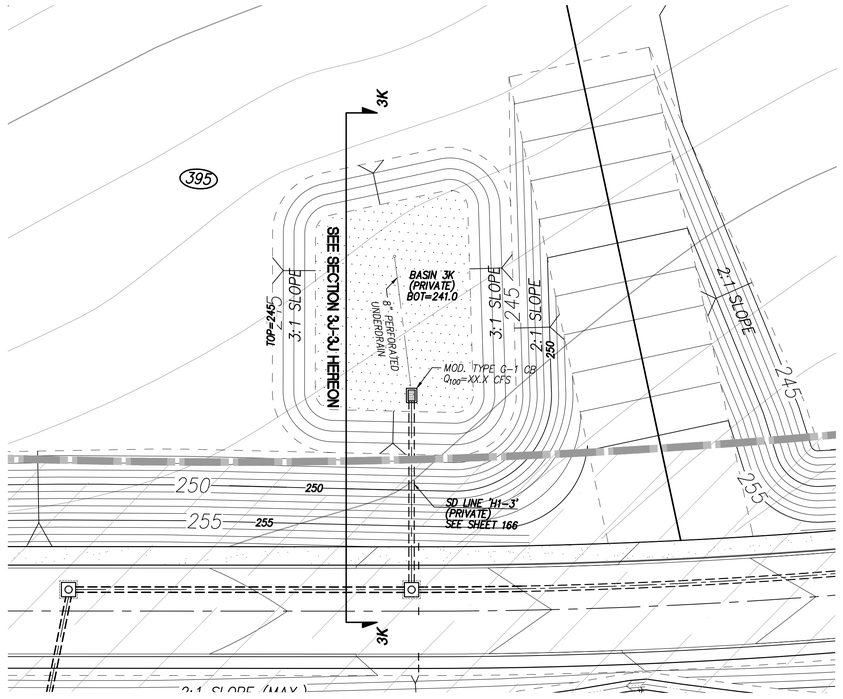


## BMP 3K
## LINED BIO-FILTRATION (PRIVATE)
SCALE: 1"=20'

REGISTERED PROFESSIONAL ENGINEER
GREGORY M. SHIELDS
No. 42951
Exp. 03-31-26
CIVIL
STATE OF CALIFORNIA

**Bowman**
Bowman Consulting Group Ltd
701 B Street, Suite 800
San Diego, CA 92101
Phone: 619.235.6471
Bowman.com
© 2024 Bowman Consulting Group Ltd

| GREGORY M. SHIELDS, R.C.E. 42951 DATE REGISTRATION EXPIRES 3-31-26 | DESIGNED BY: | PM REVIEW: | SURVEY REVIEW: |
|---|---|---|---|
| | MC/LG | RR/IM | SS |

20 10 0 20 40 60
SCALE: 1"=20'

N

**COUNTY APPROVED CHANGES**

| NO. | DESCRIPTION: | APPROVED BY: | DATE: |
|---|---|---|---|
| | | | |

**RECORD PLAN**

BY: _____ DATE: _____
NAME
R.C.E. _____
EXPIRES: _____

**BENCH MARK**

DESCRIPTION: FOUND 2" BRASS DISK MARKED "CALIF." "DEPT OF TRANSPORTATION" "SDGPS 03" "1991" "NE 15/76" & "1980"
LOCATION: BRASS DISK IN CONCRETE SIDEWALK ON NE CORNER BRIDGE ABUTMENT, 2.5' FROM FACE OF CURB & 2.5' FROM EXPANSION JOINT.
BRIDGE IS FOR HWY 76 AND SPANS INTERSTATE I-15.
RECORD FROM: ROS 21563
ELEVATION: 308.26
DATUM: NAVD 88

**PRIVATE CONTRACT**

| SHEET 207 | COUNTY OF SAN DIEGO DEPARTMENT OF PUBLIC WORKS | 243 SHEETS |
|---|---|---|

BMP DETAILS FOR:
OCEAN BREEZE RANCH-TM 5615

CALIFORNIA COORDINATE INDEX 410-1701,410-1707,410-1713 414-1703,414-1707,414-1719 418-1713,418-1719

APPROVED FOR: WILLIAM P. MORGAN, COUNTY ENGINEER
BY: _____ DATE: _____

ENGINEER OF WORK
DATE: _____
GREGORY SHIELDS, RCE NO. C42951, EXP. 03-31-26

PDS2020-LDGRMJ-30295
GRADING PERMIT NO:

| SITE SPECIFIC DATA | | | |
|---|---|---|---|
| Structure ID | | | Basin 2A-1 |
| Water Quality Flow Rate (cfs) | | | 1.30 |
| Peak Flow Rate (cfs) | | | 42.20 |
| Rim Elevation | | | 194.50' |
| Top of Vault Elevation | | | 192.44' |
| **Pipe Data** | **Pipe Size** | **Pipe Type** | **Invert Elevation** |
| Inlet | 42" | RCP | 186.95' |
| Outlet | 42" | RCP | 186.94' |
| Notes: | | | |

| PERFORMANCE SPECIFICATIONS | |
|---|---|
| Screen System Storage Volume | 126.49 cf |
| Total Sump Volume | 750.00 cf |
| NJDEP Sediment Storage Volume | 122.60 cf |
| Peak Flow Capacity* | 102.70 cfs |
| Treatment Flow Capacities:* | |
| NJDEP 50% Removal, 75 micron | 9.96 cfs |
| 80% Removal, 150 micron | 26.00 cfs |

*Contact Oldcastle for additional treatment and peak flow capacities

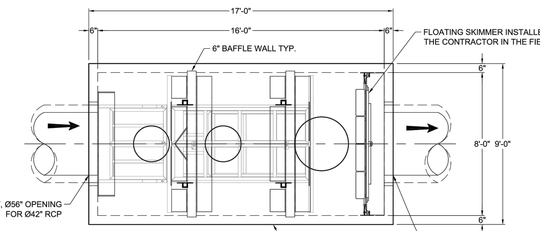


PLAN VIEW

NOTES:

1. DESIGN LOADINGS:
   A. AASHTO HS-20-44 (WITH IMPACT)
   B. DESIGN SOIL COVER: 0'-0" MAXIMUM
   C. ASSUMED WATER TABLE: BELOW BASE OF PRECAST (ENGINEER-OF-RECORD TO CONFIRM SITE WATER TABLE ELEVATION)
   D. LATERAL EARTH PRESSURE: 45 PCF (DRAINED)
   E. LATERAL LIVE LOAD SURCHARGE: 80 PSF (APPLIED TO 8'-0" BELOW GRADE)
   F. NO LATERAL SURCHARGE FROM ADJACENT BUILDINGS, WALLS, PIERS, OR FOUNDATIONS.
2. CONCRETE 28-DAY MINIMUM COMPRESSIVE STRENGTH: 5,000 PSI MINIMUM.
3. REINFORCING: REBAR, ASTM A615/A706, GRADE 60
4. CEMENT: ASTM C150
5. REQ'D ALLOWABLE SOIL BEARING CAPACITY: 2,500 PSF
6. REFERENCE STANDARD:
   A. ASTM C890
   B. ASTM C913
   C. ACI 318-14
7. THIS STRUCTURE IS DESIGNED TO THE PARAMETERS NOTED HEREIN. ENGINEER-OF-RECORD SHALL VERIFY THAT NOTED PARAMETERS MEET OR EXCEED PROJECT REQUIREMENTS. IF DESIGN PARAMETERS ARE INCORRECT, REVIEWING ENGINEER/AUTHORITY SHALL NOTIFY OLDCASTLE INFRASTRUCTURE UPON REVIEW OF THIS SUBMITTAL.
8. OVERSIZED HOLES TO ACCOMMODATE SPECIFIC PIPE TYPE MUST BE CONCENTRIC TO PIPE ID. AFTER PIPES ARE INSTALLED, ALL ANNULAR SPACES SHALL BE FILLED WITH A MINIMUM OF 3,000 PSI CONCRETE FOR FULL THICKNESS OF PRECAST WALLS. PIPES ARE TO BE FLUSH WITH THE INSIDE SURFACE OF THE CONCRETE STRUCTURE.
9. CONTRACTOR RESPONSIBLE TO VERIFY ALL SIZES, LOCATIONS, AND ELEVATIONS OF OPENINGS.
10. CONTRACTOR RESPONSIBLE TO ENSURE ADEQUATE BEARING SURFACE IS PROVIDED (I.E. COMPACTED AND LEVEL PER PROJECT SPECIFICATIONS).
11. SECTION HEIGHTS, SLAB/WALL THICKNESSES, AND KEYWAYS ARE SUBJECT TO CHANGE AS REQUIRED FOR SITE REQUIREMENTS AND/OR DUE TO PRODUCT AVAILABILITY AND PRODUCTION FACILITY CONSTRAINTS.
12. FOR SITE SPECIFIC DRAWINGS WITH DETAILED STRUCTURE DIMENSIONS AND WEIGHTS, PLEASE CONTACT OLDCASTLE INFRASTRUCTURE.
13. MAXIMUM PICK WEIGHT: 45,950 LBS. (* COMBINED WEIGHT INCLUDES BAFFLE WALLS AND PRODUCT INTERNALS )
14. INTERNALS SHALL CONSIST OF A FLOATING SKIMMER, FLOW DEFLECTORS, ELEVATED CENTRAL SCREEN SYSTEM AND SLIDING LIDS. THESE COMPONENTS EFFECTIVELY REDUCE HEAD LOSS, INCREASE POLLUTANT REMOVAL AND SIMPLIFY MAINTENANCE.

**ALL PIPE ANGLES TO BE IMMEDIATELY OUTSIDE OF THE STRUCTURE, BY OTHERS.**

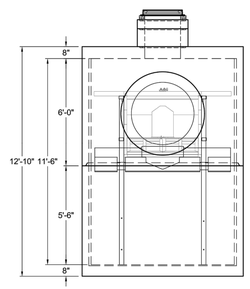


LEFT END VIEW

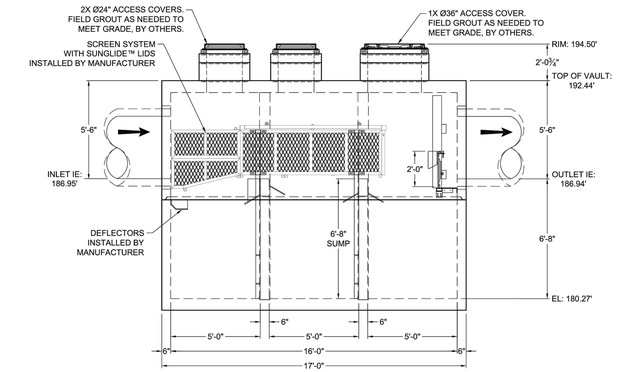


ELEVATION VIEW

- PRELIMINARY -
NOT FOR CONSTRUCTION

Oldcastle Infrastructure
A CRH COMPANY
Ph: 800.579.8510 | www.oldcastleinfrastructure.com/contact-us/

THIS DOCUMENT IS THE PROPERTY OF OLDCASTLE INFRASTRUCTURE, INC. IT IS CONFIDENTIAL, SUBMITTED FOR REFERENCE PURPOSES ONLY AND SHALL NOT BE USED IN ANY WAY INJURIOUS TO THE INTERESTS OF, OR IN COMPETITION WITH OLDCASTLE INFRASTRUCTURE, INC. OR ITS AFFILIATES. COPYRIGHT © 2024 OLDCASTLE INFRASTRUCTURE, INC. ALL RIGHTS RESERVED.

Nutrient Separating Baffle Box®
NSBB-816

| CUSTOMER | | | | | | |
|---|---|---|---|---|---|---|
| Bowman | | | | | | |
| PROJECT NAME | | | | | | |
| Ocean Breeze Ranch (OBR) - Bonsall, CA | | | | | | |
| DATE | MFG SYSTEM | DRAWN BY | ENGINEER APP'D | CHECKED APP'D | SALES ORDER | |
| 6/6/24 | STO-FCI PPS | HMF | HMF | HMF | - | |
| SHEET NAME | | | | REVISION | SHEET | |
| 21-603205-NSBB-816_Basin 2A-1 | | | | REV DATE 10/28/24 | 1 OF 1 | |

THIS PRODUCT IS PROTECTED BY ONE OR MORE OF THE FOLLOWING US PATENT(S): 6,428,692; 7,270,747; 7,981,283; 8,142,666; 8,366,923; 8,491,797; 7,846,327; 8,034,236; RELATED FOREIGN PATENTS, OR OTHER PATENTS PENDING.

| SITE SPECIFIC DATA | | | |
|---|---|---|---|
| Structure ID | | | Basin 2A-2 |
| Water Quality Flow Rate (cfs) | | | 0.79 |
| Peak Flow Rate (cfs) | | | 26.30 |
| Rim Elevation | | | 194.48' |
| Top of Vault Elevation | | | 192.17' |
| **Pipe Data** | **Pipe Size** | **Pipe Type** | **Invert Elevation** |
| Inlet | 30" | HDPE | 187.58' |
| Outlet | 30" | RCP | 187.50' |
| Notes: | | | |

| PERFORMANCE SPECIFICATIONS | |
|---|---|
| Screen System Storage Volume | 55.63 cf |
| Total Sump Volume | 328.67 cf |
| NJDEP Sediment Storage Volume | 68.60 cf |
| Peak Flow Capacity* | 62.00 cfs |
| Treatment Flow Capacities:* | |
| NJDEP 50% Removal, 75 micron | 5.60 cfs |
| 80% Removal, 150 micron | 12.70 cfs |

*Contact Oldcastle for additional treatment and peak flow capacities

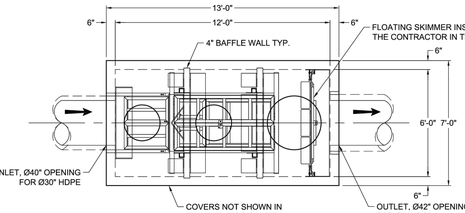


PLAN VIEW

NOTES:

1. DESIGN LOADINGS:
   A. AASHTO HS-20-44 (WITH IMPACT)
   B. DESIGN SOIL COVER: 0'-0" MAXIMUM
   C. ASSUMED WATER TABLE: BELOW BASE OF PRECAST (ENGINEER-OF-RECORD TO CONFIRM SITE WATER TABLE ELEVATION)
   D. LATERAL EARTH PRESSURE: 45 PCF (DRAINED)
   E. LATERAL LIVE LOAD SURCHARGE: 80 PSF (APPLIED TO 8'-0" BELOW GRADE)
   F. NO LATERAL SURCHARGE FROM ADJACENT BUILDINGS, WALLS, PIERS, OR FOUNDATIONS.
2. CONCRETE 28-DAY MINIMUM COMPRESSIVE STRENGTH: 5,000 PSI MINIMUM.
3. REINFORCING: REBAR, ASTM A615/A706, GRADE 60
4. CEMENT: ASTM C150
5. REQ'D ALLOWABLE SOIL BEARING CAPACITY: 2,500 PSF
6. REFERENCE STANDARD:
   A. ASTM C890
   B. ASTM C913
   C. ACI 318-14
7. THIS STRUCTURE IS DESIGNED TO THE PARAMETERS NOTED HEREIN. ENGINEER-OF-RECORD SHALL VERIFY THAT NOTED PARAMETERS MEET OR EXCEED PROJECT REQUIREMENTS. IF DESIGN PARAMETERS ARE INCORRECT, REVIEWING ENGINEER/AUTHORITY SHALL NOTIFY OLDCASTLE INFRASTRUCTURE UPON REVIEW OF THIS SUBMITTAL.
8. OVERSIZED HOLES TO ACCOMMODATE SPECIFIC PIPE TYPE MUST BE CONCENTRIC TO PIPE ID. AFTER PIPES ARE INSTALLED, ALL ANNULAR SPACES SHALL BE FILLED WITH A MINIMUM OF 3,000 PSI CONCRETE FOR FULL THICKNESS OF PRECAST WALLS. PIPES ARE TO BE FLUSH WITH THE INSIDE SURFACE OF THE CONCRETE STRUCTURE.
9. CONTRACTOR RESPONSIBLE TO VERIFY ALL SIZES, LOCATIONS, AND ELEVATIONS OF OPENINGS.
10. CONTRACTOR RESPONSIBLE TO ENSURE ADEQUATE BEARING SURFACE IS PROVIDED (I.E. COMPACTED AND LEVEL PER PROJECT SPECIFICATIONS).
11. SECTION HEIGHTS, SLAB/WALL THICKNESSES, AND KEYWAYS ARE SUBJECT TO CHANGE AS REQUIRED FOR SITE REQUIREMENTS AND/OR DUE TO PRODUCT AVAILABILITY AND PRODUCTION FACILITY CONSTRAINTS.
12. FOR SITE SPECIFIC DRAWINGS WITH DETAILED STRUCTURE DIMENSIONS AND WEIGHTS, PLEASE CONTACT OLDCASTLE INFRASTRUCTURE.
13. MAXIMUM PICK WEIGHT: 23,750 LBS. (* COMBINED WEIGHT INCLUDES BAFFLE WALLS AND PRODUCT INTERNALS )
14. INTERNALS SHALL CONSIST OF A FLOATING SKIMMER, FLOW DEFLECTORS, ELEVATED CENTRAL SCREEN SYSTEM AND SLIDING LIDS. THESE COMPONENTS EFFECTIVELY REDUCE HEAD LOSS, INCREASE POLLUTANT REMOVAL AND SIMPLIFY MAINTENANCE.

**ALL PIPE ANGLES TO BE IMMEDIATELY OUTSIDE OF THE STRUCTURE, BY OTHERS.**

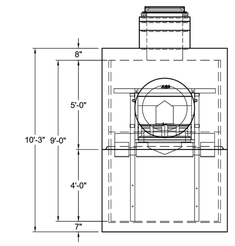


LEFT END VIEW

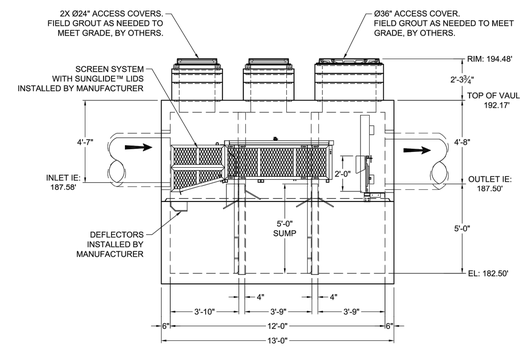


ELEVATION VIEW

- PRELIMINARY -
NOT FOR CONSTRUCTION

Oldcastle Infrastructure
A CRH COMPANY
Ph: 800.579.8510 | www.oldcastleinfrastructure.com/contact-us/

THIS DOCUMENT IS THE PROPERTY OF OLDCASTLE INFRASTRUCTURE, INC. IT IS CONFIDENTIAL, SUBMITTED FOR REFERENCE PURPOSES ONLY AND SHALL NOT BE USED IN ANY WAY INJURIOUS TO THE INTERESTS OF, OR IN COMPETITION WITH OLDCASTLE INFRASTRUCTURE, INC. OR ITS AFFILIATES. COPYRIGHT © 2024 OLDCASTLE INFRASTRUCTURE, INC. ALL RIGHTS RESERVED.

Nutrient Separating Baffle Box®
NSBB-612

| CUSTOMER | | | | | | |
|---|---|---|---|---|---|---|
| Bowman | | | | | | |
| PROJECT NAME | | | | | | |
| Ocean Breeze Ranch (OBR) - Bonsall, CA | | | | | | |
| DATE | MFG SYSTEM | DRAWN BY | ENGINEER APP'D | CHECKED APP'D | SALES ORDER | |
| 6/6/24 | STO-FCI PPS | HMF | HMF | HMF | - | |
| SHEET NAME | | | | REVISION | SHEET | |
| 21-603205-NSBB-612_Basin 2A-2 | | | | REV DATE 10/28/24 | 1 OF 1 | |

THIS PRODUCT IS PROTECTED BY ONE OR MORE OF THE FOLLOWING US PATENT(S): 6,428,692; 7,270,747; 7,981,283; 8,142,666; 8,366,923; 8,491,797; 7,846,327; 8,034,236; RELATED FOREIGN PATENTS, OR OTHER PATENTS PENDING.

BMP 2A-1
NUTRIENT SEPARATING BAFFLE BOX-816
DETAIL

BMP 2A-2
NUTRIENT SEPARATING BAFFLE BOX-612
DETAIL

REGISTERED PROFESSIONAL ENGINEER
GREGORY M. SHIELDS
No. 42951
Exp. 03-31-26
CIVIL
STATE OF CALIFORNIA

Bowman
Bowman Consulting Group Ltd
701 B Street, Suite 800
San Diego, CA 92101
Phone: 619.235.6471
Bowman.com
© 2024 Bowman Consulting Group Ltd

| GREGORY M. SHIELDS, R.C.E. 42951 | DATE | REGISTRATION EXPIRES 3-31-26 | DESIGNED BY: | PM REVIEW: | SURVEY REVIEW: |
|---|---|---|---|---|---|
| | | | MC/LG | RR/IM | SS |

**RECORD PLAN**

BY: _____ DATE: _____
NAME
R.C.E. _____
EXPIRES: _____

**COUNTY APPROVED CHANGES**

| NO. | DESCRIPTION: | APPROVED BY: | DATE: |
|---|---|---|---|
| | | | |

**BENCH MARK**

DESCRIPTION: FOUND 2" BRASS DISK MARKED "CALIF." "DEPT OF TRANSPORTATION" "SDGPS 03" "1991" "NE 15/76" & "1980"
LOCATION: BRASS DISK IN CONCRETE SIDEWALK ON NE CORNER BRIDGE ABUTMENT, 2.5' FROM FACE OF CURB & 2.5' FROM EXPANSION JOINT. BRIDGE IS FOR HWY 76 AND SPANS INTERSTATE I-15.
RECORD FROM: ROS 21563
ELEVATION: 308.26
DATUM: NAVD 88

**PRIVATE CONTRACT**

| SHEET 208 | COUNTY OF SAN DIEGO DEPARTMENT OF PUBLIC WORKS | 243 SHEETS |
|---|---|---|

BMP DETAILS FOR:
OCEAN BREEZE RANCH-TM 5615

CALIFORNIA COORDINATE INDEX 410-1701,410-1707,410-1713 414-1703,414-1707,414-1719 418-1713,418-1719

APPROVED FOR: WILLIAM P. MORGAN, COUNTY ENGINEER
BY: _____ DATE: _____

ENGINEER OF WORK
DATE: _____
GREGORY SHIELDS, RCE NO. C42951, EXP. 03-31-26

PDS2020-LDGRMJ-30295
GRADING PERMIT NO:

*Last save by LOURDES GARCIA, File Name Q:\CA-SAND-PD\Projects\4192.10\Engr\DWG_Plans\Grading Rough\7 BMP SHEETS\4192.10 0208_RG-BMP.dwg, Date Last Saved 10/31/2024 10:10:19 PM, Date Plotted Last 11/7/2024 4:33:01 PM*

Q:\CA-SAND-PD\Projects\4192.10\Engr\DWG_Plans\Grading Rough\7 BMP SHEETS\4192.10 0208_RG-BMP.dwg, 11/7/2024 4:33:00 PM, _AutoCAD PDF (General Documentation).pc3

| SITE SPECIFIC DATA | |
|---|---|
| Structure ID | Basin 1A-2 |
| Water Quality Flow Rate (cfs) | 0.63 |
| Peak Flow Rate (cfs) | - |
| Rim Elevation | 244.50' |
| Top of Vault Elevation | 240.06' |

| Pipe Data | Pipe Size | Pipe Type | Invert Elevation |
|---|---|---|---|
| Inlet | 18" | RCP | 232.56' |
| Outlet | 18" | RCP | 232.39' |

Notes:

| PERFORMANCE SPECIFICATIONS | |
|---|---|
| Screen System Storage Volume | 25.66 cf |
| Total Sump Volume | 88.00 cf |
| NJDEP Sediment Storage Volume | 30.00 cf |
| Peak Flow Capacity* | 26.20 cfs |
| Treatment Flow Capacities:* | |
| NJDEP 50% Removal, 75 micron | 2.49 cfs |
| 80% Removal, 150 micron | 4.60 cfs |

*Contact Oldcastle for additional treatment and peak flow capacities.

**ALL PIPE ANGLES TO BE IMMEDIATELY OUTSIDE OF THE STRUCTURE, BY OTHERS.**

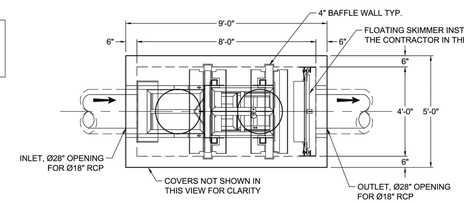


PLAN VIEW

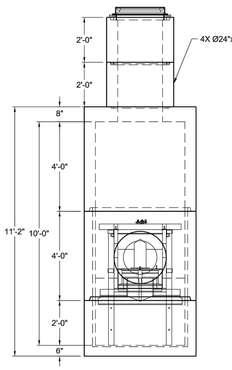


LEFT END VIEW

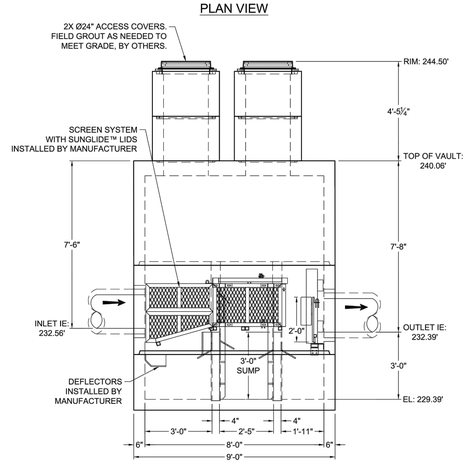


ELEVATION VIEW

NOTES:

1. DESIGN LOADINGS:
   A. AASHTO HS-20-44 (WITH IMPACT)
   B. DESIGN SOIL COVER: 5'-0" MAXIMUM
   C. ASSUMED WATER TABLE: BELOW BASE OF PRECAST (ENGINEER-OF-RECORD TO CONFIRM SITE WATER TABLE ELEVATION)
   D. LATERAL EARTH PRESSURE: 45 PCF (DRAINED)
   E. LATERAL LIVE LOAD SURCHARGE: 80 PSF (APPLIED TO 8'-0" BELOW GRADE)
   F. NO LATERAL SURCHARGE FROM ADJACENT BUILDINGS, WALLS, PIERS, OR FOUNDATIONS.
2. CONCRETE 28-DAY MINIMUM COMPRESSIVE STRENGTH: 5,000 PSI MINIMUM.
3. REINFORCING: REBAR, ASTM A615/A706, GRADE 60
4. CEMENT: ASTM C150
5. REQ'D ALLOWABLE SOIL BEARING CAPACITY: 2,500 PSF
6. REFERENCE STANDARD:
   A. ASTM C890
   B. ASTM C913
   C. ACI 318-14
7. THIS STRUCTURE IS DESIGNED TO THE PARAMETERS NOTED HEREIN. ENGINEER-OF-RECORD SHALL VERIFY THAT NOTED PARAMETERS MEET OR EXCEED PROJECT REQUIREMENTS. IF DESIGN PARAMETERS ARE INCORRECT, REVIEWING ENGINEER/AUTHORITY SHALL NOTIFY OLDCASTLE INFRASTRUCTURE UPON REVIEW OF THIS SUBMITTAL.
8. OVERSIZED HOLES TO ACCOMMODATE SPECIFIC PIPE TYPE MUST BE CONCENTRIC TO PIPE ID. AFTER PIPES ARE INSTALLED, ALL ANNULAR SPACES SHALL BE FILLED WITH A MINIMUM OF 3,000 PSI CONCRETE FOR FULL THICKNESS OF PRECAST WALLS. PIPES ARE TO BE FLUSH WITH THE INSIDE SURFACE OF THE CONCRETE STRUCTURE.
9. CONTRACTOR RESPONSIBLE TO VERIFY ALL SIZES, LOCATIONS, AND ELEVATIONS OF OPENINGS.
10. CONTRACTOR RESPONSIBLE TO ENSURE ADEQUATE BEARING SURFACE IS PROVIDED (I.E. COMPACTED AND LEVEL PER PROJECT SPECIFICATIONS).
11. SECTION HEIGHTS, SLAB/WALL THICKNESSES, AND KEYWAYS ARE SUBJECT TO CHANGE AS REQUIRED FOR SITE REQUIREMENTS AND/OR DUE TO PRODUCT AVAILABILITY AND PRODUCTION FACILITY CONSTRAINTS.
12. FOR SITE SPECIFIC DRAWINGS WITH DETAILED STRUCTURE DIMENSIONS AND WEIGHTS, PLEASE CONTACT OLDCASTLE INFRASTRUCTURE.
13. MAXIMUM PICK WEIGHT: 10,500 LBS. (* COMBINED WEIGHT INCLUDES BAFFLE WALLS AND PRODUCT INTERNALS.)
14. INTERNALS SHALL CONSIST OF A FLOATING SKIMMER, FLOW DEFLECTORS, ELEVATED CENTRAL SCREEN SYSTEM AND SLIDING LIDS. THESE COMPONENTS EFFECTIVELY REDUCE HEAD LOSS, INCREASE POLLUTANT REMOVAL AND SIMPLIFY MAINTENANCE.

- PRELIMINARY - NOT FOR CONSTRUCTION

Oldcastle Infrastructure
A CRH COMPANY
Ph: 800.579.8818 | www.oldcastleinfrastructure.com/stormwater

THIS DOCUMENT IS THE PROPERTY OF OLDCASTLE INFRASTRUCTURE, INC. AND IS CONFIDENTIAL AND SHALL NOT BE COPIED, REPRODUCED OR USED, SHALL NOT BE USED IN ANY WAY INJURIOUS TO THE INTERESTS OF, OR WITHOUT THE WRITTEN PERMISSION OF OLDCASTLE INFRASTRUCTURE, INC. COPYRIGHT © 2024 OLDCASTLE INFRASTRUCTURE, INC. ALL RIGHTS RESERVED.

Nutrient Separating Baffle Box®
NSBB-48

| CUSTOMER | |
|---|---|
| - | |
| PROJECT NAME | |
| Ocean Breeze Ranch (OBR) - Bonsall, CA | |

| DATE | BPC | DRAWN | DESIGNED | CHECKED | SALES OFFICE |
|---|---|---|---|---|---|
| 10/1/24 | 070-FO | PPS | HMF | HMF | - |
| DRAWING NO. | | | | REVISION | SHEET |
| 21-603205-NSBB-48_Basin 1A-2 | | | | REV DATE 10/28/24 | 1 OF 1 |

THIS PRODUCT IS PROTECTED BY ONE OR MORE OF THE FOLLOWING US PATENT(S): 6,428,692; 7,270,747; 7,981,283; 8,142,666; 8,366,923; 8,491,797; 7,846,327; 8,034,236; RELATED FOREIGN PATENTS, OR OTHER PATENTS PENDING.

| REV | DESCRIPTION | BY | DATE |
|---|---|---|---|
| | | | |

## BMP 1A-2
## NUTRIENT SEPARATING BAFFLE BOX-48 DETAIL

| SITE SPECIFIC DATA | |
|---|---|
| Structure ID | Basin 1A-3 |
| Water Quality Flow Rate (cfs) | 0.90 |
| Peak Flow Rate (cfs) | - |
| Rim Elevation | 236.20' |
| Top of Vault Elevation | 234.38' |

| Pipe Data | Pipe Size | Pipe Type | Invert Elevation |
|---|---|---|---|
| Inlet | 42" | RCP | 229.05' |
| Outlet | 42" | RCP | 228.88' |

Notes:

| PERFORMANCE SPECIFICATIONS | |
|---|---|
| Screen System Storage Volume | 126.49 cf |
| Total Sump Volume | 750.00 cf |
| NJDEP Sediment Storage Volume | 122.60 cf |
| Peak Flow Capacity* | 102.70 cfs |
| Treatment Flow Capacities:* | |
| NJDEP 50% Removal, 75 micron | 9.96 cfs |
| 80% Removal, 150 micron | 26.00 cfs |

*Contact Oldcastle for additional treatment and peak flow capacities.

**ALL PIPE ANGLES TO BE IMMEDIATELY OUTSIDE OF THE STRUCTURE, BY OTHERS.**

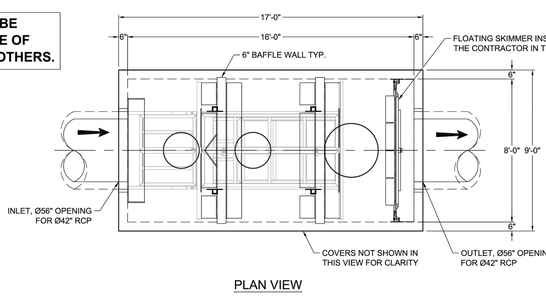


PLAN VIEW

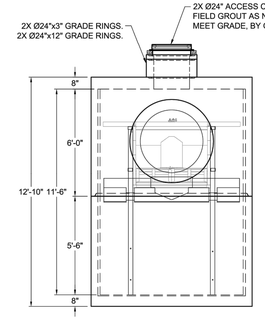


LEFT END VIEW

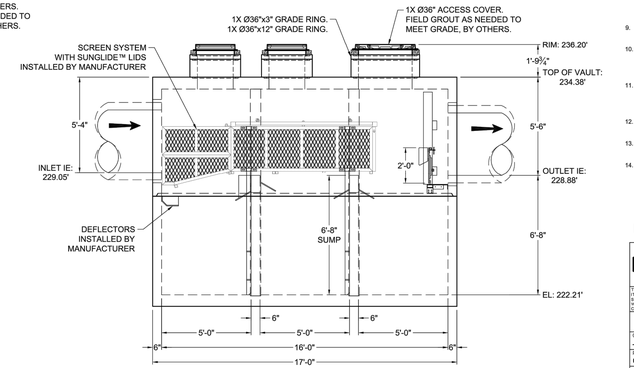


ELEVATION VIEW

NOTES:

1. DESIGN LOADINGS:
   A. AASHTO HS-20-44 (WITH IMPACT)
   B. DESIGN SOIL COVER: 5'-0" MAXIMUM
   C. ASSUMED WATER TABLE: BELOW BASE OF PRECAST (ENGINEER-OF-RECORD TO CONFIRM SITE WATER TABLE ELEVATION)
   D. LATERAL EARTH PRESSURE: 45 PCF (DRAINED)
   E. LATERAL LIVE LOAD SURCHARGE: 80 PSF (APPLIED TO 8'-0" BELOW GRADE)
   F. NO LATERAL SURCHARGE FROM ADJACENT BUILDINGS, WALLS, PIERS, OR FOUNDATIONS.
2. CONCRETE 28-DAY MINIMUM COMPRESSIVE STRENGTH: 8,000 PSI MINIMUM.
3. REINFORCING: REBAR, ASTM A615/A706, GRADE 60
4. CEMENT: ASTM C150
5. REQ'D ALLOWABLE SOIL BEARING CAPACITY: 2,500 PSF
6. REFERENCE STANDARD:
   A. ASTM C890
   B. ASTM C913
   C. ACI 318-14
7. THIS STRUCTURE IS DESIGNED TO THE PARAMETERS NOTED HEREIN. ENGINEER-OF-RECORD SHALL VERIFY THAT NOTED PARAMETERS MEET OR EXCEED PROJECT REQUIREMENTS. IF DESIGN PARAMETERS ARE INCORRECT, REVIEWING ENGINEER/AUTHORITY SHALL NOTIFY OLDCASTLE INFRASTRUCTURE UPON REVIEW OF THIS SUBMITTAL.
8. OVERSIZED HOLES TO ACCOMMODATE SPECIFIC PIPE TYPE MUST BE CONCENTRIC TO PIPE ID. AFTER PIPES ARE INSTALLED, ALL ANNULAR SPACES SHALL BE FILLED WITH A MINIMUM OF 3,000 PSI CONCRETE FOR FULL THICKNESS OF PRECAST WALLS. PIPES ARE TO BE FLUSH WITH THE INSIDE SURFACE OF THE CONCRETE STRUCTURE.
9. CONTRACTOR RESPONSIBLE TO VERIFY ALL SIZES, LOCATIONS, AND ELEVATIONS OF OPENINGS.
10. CONTRACTOR RESPONSIBLE TO ENSURE ADEQUATE BEARING SURFACE IS PROVIDED (I.E. COMPACTED AND LEVEL PER PROJECT SPECIFICATIONS).
11. SECTION HEIGHTS, SLAB/WALL THICKNESSES, AND KEYWAYS ARE SUBJECT TO CHANGE AS REQUIRED FOR SITE REQUIREMENTS AND/OR DUE TO PRODUCT AVAILABILITY AND PRODUCTION FACILITY CONSTRAINTS.
12. FOR SITE SPECIFIC DRAWINGS WITH DETAILED STRUCTURE DIMENSIONS AND WEIGHTS, PLEASE CONTACT OLDCASTLE INFRASTRUCTURE.
13. MAXIMUM PICK WEIGHT: 45,500 LBS. (* COMBINED WEIGHT INCLUDES BAFFLE WALLS AND PRODUCT INTERNALS.)
14. INTERNALS SHALL CONSIST OF A FLOATING SKIMMER, FLOW DEFLECTORS, ELEVATED CENTRAL SCREEN SYSTEM AND SLIDING LIDS. THESE COMPONENTS EFFECTIVELY REDUCE HEAD LOSS, INCREASE POLLUTANT REMOVAL AND SIMPLIFY MAINTENANCE.

- PRELIMINARY - NOT FOR CONSTRUCTION

Oldcastle Infrastructure
A CRH COMPANY
Ph: 800.579.8818 | www.oldcastleinfrastructure.com/stormwater

THIS DOCUMENT IS THE PROPERTY OF OLDCASTLE INFRASTRUCTURE, INC. AND IS CONFIDENTIAL AND SHALL NOT BE COPIED, REPRODUCED OR USED, SHALL NOT BE USED IN ANY WAY INJURIOUS TO THE INTERESTS OF, OR WITHOUT THE WRITTEN PERMISSION OF OLDCASTLE INFRASTRUCTURE, INC. COPYRIGHT © 2024 OLDCASTLE INFRASTRUCTURE, INC. ALL RIGHTS RESERVED.

Nutrient Separating Baffle Box®
NSBB-816

| CUSTOMER | |
|---|---|
| - | |
| PROJECT NAME | |
| Ocean Breeze Ranch (OBR) - Bonsall, CA | |

| DATE | BPC | DRAWN | DESIGNED | CHECKED | SALES OFFICE |
|---|---|---|---|---|---|
| 8/1/24 | 070-FO | PPS | HMF | HMF | - |
| DRAWING NO. | | | | REVISION | SHEET |
| 21-603205-NSBB-816_Basin 1A-3 | | | | REV DATE 10/28/24 | 1 OF 1 |

THIS PRODUCT IS PROTECTED BY ONE OR MORE OF THE FOLLOWING US PATENT(S): 6,428,692; 7,270,747; 7,981,283; 8,142,666; 8,366,923; 8,491,797; 7,846,327; 8,034,236; RELATED FOREIGN PATENTS, OR OTHER PATENTS PENDING.

## BMP 1A-3
## NUTRIENT SEPARATING BAFFLE BOX-816 DETAIL

REGISTERED PROFESSIONAL ENGINEER — GREGORY M. SHIELDS — No. 42951 — Exp. 03-31-26 — CIVIL — STATE OF CALIFORNIA

Bowman

Bowman Consulting Group Ltd
701 B Street, Suite 800
San Diego, CA 92101

Phone: 619.235.6471
Bowman.com
© 2024 Bowman Consulting Group Ltd

| GREGORY M. SHIELDS, R.C.E. 42951 | DATE | REGISTRATION EXPIRES 3-31-26 | DESIGNED BY: | PM REVIEW: | SURVEY REVIEW: |
|---|---|---|---|---|---|
| | | | MC/LG | RR/IM | SS |

**RECORD PLAN**

BY: _____ DATE: _____
NAME
R.C.E. _____
EXPIRES: _____

**COUNTY APPROVED CHANGES**

| NO. | DESCRIPTION: | APPROVED BY: | DATE: |
|---|---|---|---|
| | | | |

**BENCH MARK**

DESCRIPTION: FOUND 2" BRASS DISK MARKED "CALIF." "DEPT OF TRANSPORTATION" "SDGPS 03" "1991" "NE 15/76" & "1980"
LOCATION: BRASS DISK IN CONCRETE SIDEWALK ON NE CORNER BRIDGE ABUTMENT, 2.5' FROM FACE OF CURB & 2.5' FROM EXPANSION JOINT.
BRIDGE IS FOR HWY 76 AND SPANS INTERSTATE I-15.
RECORD FROM: ROS 21563
ELEVATION: 308.26
DATUM: NAVD 88

**PRIVATE CONTRACT**

| SHEET 209 | COUNTY OF SAN DIEGO DEPARTMENT OF PUBLIC WORKS | 243 SHEETS |
|---|---|---|

BMP DETAILS FOR:
OCEAN BREEZE RANCH-TM 5615

CALIFORNIA COORDINATE INDEX: 410-1701,410-1707,410-1713 414-1703,414-1707,414-1719 418-1713,418-1719

APPROVED FOR: WILLIAM P. MORGAN, COUNTY ENGINEER
BY: _____ DATE: _____

ENGINEER OF WORK
DATE: _____
GREGORY SHIELDS, RCE NO. C42951, EXP. 03-31-26

PDS2020-LDGRMJ-30295
GRADING PERMIT NO:

| SITE SPECIFIC DATA | | | |
|---|---|---|---|
| Structure ID | | | Basin 2B-2 |
| Water Quality Flow Rate (cfs) | | | 0.68 |
| Peak Flow Rate (cfs) | | | 25.20 |
| Rim Elevation | | | 201.88' |
| Top of Vault Elevation | | | 198.33' |
| **Pipe Data** | **Pipe Size** | **Pipe Type** | **Invert Elevation** |
| Inlet | 30" | RCP | 193.76' |
| Outlet | 30" | RCP | 193.66' |
| Notes: | | | |

| PERFORMANCE SPECIFICATIONS | |
|---|---|
| Screen System Storage Volume | 55.63 cf |
| Total Sump Volume | 328.67 cf |
| NJDEP Sediment Storage Volume | 68.60 cf |
| Peak Flow Capacity* | 62.00 cfs |
| Treatment Flow Capacities:* | |
| NJDEP 50% Removal, 75 micron | 5.60 cfs |
| 80% Removal, 150 micron | 12.70 cfs |

*Contact Oldcastle for additional treatment and peak flow capacities.

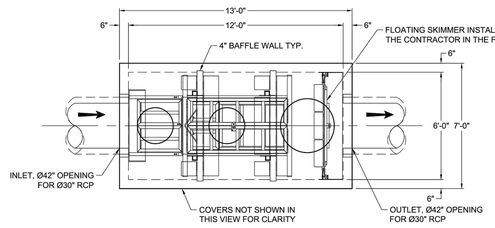


PLAN VIEW

**ALL PIPE ANGLES TO BE IMMEDIATELY OUTSIDE OF THE STRUCTURE, BY OTHERS.**

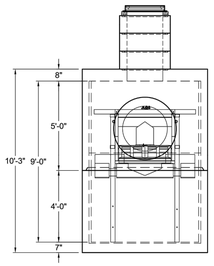


LEFT END VIEW

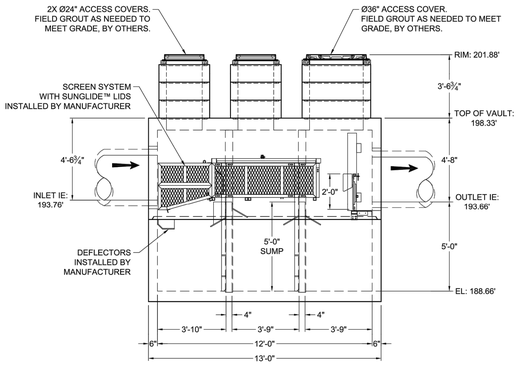


ELEVATION VIEW

NOTES:

1. DESIGN LOADINGS:
   A. AASHTO HS-20-44 (WITH IMPACT)
   B. DESIGN SOIL COVER: 5'-0" MAXIMUM
   C. ASSUMED WATER TABLE: BELOW BASE OF PRECAST (ENGINEER-OF-RECORD TO CONFIRM SITE WATER TABLE ELEVATION)
   D. LATERAL EARTH PRESSURE: 45 PCF (DRAINED)
   E. LATERAL LIVE LOAD SURCHARGE: 80 PSF (APPLIED TO 8'-0" BELOW GRADE)
   F. NO LATERAL SURCHARGE FROM ADJACENT BUILDINGS, WALLS, PIERS, OR FOUNDATIONS.
2. CONCRETE 28-DAY MINIMUM COMPRESSIVE STRENGTH: 5,000 PSI MINIMUM.
3. REINFORCING: REBAR, ASTM A615/A706, GRADE 60
4. CEMENT: ASTM C150
5. REQ'D ALLOWABLE SOIL BEARING CAPACITY: 2,500 PSF
6. REFERENCE STANDARD:
   A. ASTM C890
   B. ASTM C913
   C. ACI 318-14
7. THIS STRUCTURE IS DESIGNED TO THE PARAMETERS NOTED HEREIN. ENGINEER-OF-RECORD SHALL VERIFY THAT NOTED PARAMETERS MEET OR EXCEED PROJECT REQUIREMENTS. IF DESIGN PARAMETERS ARE INCORRECT, REVIEWING ENGINEER/AUTHORITY SHALL NOTIFY OLDCASTLE INFRASTRUCTURE UPON REVIEW OF THIS SUBMITTAL.
8. OVERSIZED HOLES TO ACCOMMODATE SPECIFIC PIPE TYPE MUST BE CONCENTRIC TO PIPE ID. AFTER PIPES ARE INSTALLED, ALL ANNULAR SPACES SHALL BE FILLED WITH A MINIMUM OF 3,000 PSI CONCRETE FOR FULL THICKNESS OF PRECAST WALLS. PIPES ARE TO BE FLUSH WITH THE INSIDE SURFACE OF THE CONCRETE STRUCTURE.
9. CONTRACTOR RESPONSIBLE TO VERIFY ALL SIZES, LOCATIONS, AND ELEVATIONS OF OPENINGS.
10. CONTRACTOR RESPONSIBLE TO ENSURE ADEQUATE BEARING SURFACE IS PROVIDED (I.E. COMPACTED AND LEVEL PER PROJECT SPECIFICATIONS).
11. SECTION HEIGHTS, SLAB/WALL THICKNESSES, AND KEYWAYS ARE SUBJECT TO CHANGE AS REQUIRED FOR SITE REQUIREMENTS AND/OR DUE TO PRODUCT AVAILABILITY AND PRODUCTION FACILITY CONSTRAINTS.
12. FOR SITE SPECIFIC DRAWINGS WITH DETAILED STRUCTURE DIMENSIONS AND WEIGHTS, PLEASE CONTACT OLDCASTLE INFRASTRUCTURE.
13. MAXIMUM PICK WEIGHT: 23,750 LBS. (* COMBINED WEIGHT INCLUDES BAFFLE WALLS AND PRODUCT INTERNALS.)
14. INTERNALS SHALL CONSIST OF A FLOATING SKIMMER, FLOW DEFLECTORS, ELEVATED CENTRAL SCREEN SYSTEM AND SLIDING LIDS. THESE COMPONENTS EFFECTIVELY REDUCE HEAD LOSS, INCREASE POLLUTANT REMOVAL AND SIMPLIFY MAINTENANCE.

- PRELIMINARY - NOT FOR CONSTRUCTION

Oldcastle Infrastructure
A CRH COMPANY
Ph: 800.579.8819 | www.oldcastleinfrastructure.com/stormwater
THIS DOCUMENT IS THE PROPERTY OF OLDCASTLE INFRASTRUCTURE, INC. AND IS TO BE USED FOR THE PROJECT AND SPECIFIC USE FOR WHICH IT IS SHALL NOT BE USED IN ANY WAY INJURIOUS TO THE INTERESTS OF, OR WITHOUT THE WRITTEN PERMISSION OF OLDCASTLE INFRASTRUCTURE, INC. COPYRIGHT © 2024 OLDCASTLE INFRASTRUCTURE, INC. ALL RIGHTS RESERVED.

Nutrient Separating Baffle Box® NSBB-612

| CUSTOMER | | | | | | |
|---|---|---|---|---|---|---|
| Bowman | | | | | | |
| PROJECT NAME | | | | | | |
| Ocean Breeze Ranch (OBR) - Bonsall, CA | | | | | | |
| DATE | JOB NO. | MFG | DESIGN | DRAWN | CHECKED | SALES ORDER |
| 6/6/24 | 070-FO | PPS | HMF | HMF | | |
| SHEET NAME | | | | REVISION | | SHEET |
| 21-603205-NSBB-612_Basin 2B-2 | | | | REV DATE 10/2024 | | 1 OF 1 |

THIS PRODUCT IS PROTECTED BY ONE OR MORE OF THE FOLLOWING US PATENT(S): 6,428,692; 7,270,747; 7,981,283; 8,142,666; 8,366,923; 8,491,797; 7,846,327; 8,034,236; RELATED FOREIGN PATENTS, OR OTHER PATENTS PENDING.

| SITE SPECIFIC DATA | | | |
|---|---|---|---|
| Structure ID | | | Basin 2H-1 |
| Water Quality Flow Rate (cfs) | | | 0.90 |
| Peak Flow Rate (cfs) | | | 29.60 |
| Rim Elevation | | | 203.98' |
| Top of Vault Elevation | | | 197.87' |
| **Pipe Data** | **Pipe Size** | **Pipe Type** | **Invert Elevation** |
| Inlet | 30" | HDPE | 193.53' |
| Outlet | 30" | HDPE | 193.20' |
| Notes: | | | |

| PERFORMANCE SPECIFICATIONS | |
|---|---|
| Screen System Storage Volume | 55.63 cf |
| Total Sump Volume | 328.67 cf |
| NJDEP Sediment Storage Volume | 68.60 cf |
| Peak Flow Capacity* | 62.00 cfs |
| Treatment Flow Capacities:* | |
| NJDEP 50% Removal, 75 micron | 5.60 cfs |
| 80% Removal, 150 micron | 12.70 cfs |

*Contact Oldcastle for additional treatment and peak flow capacities.

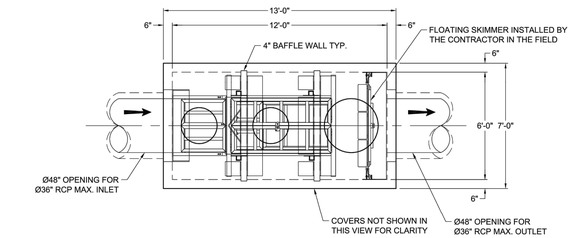


PLAN VIEW

**ALL PIPE ANGLES TO BE IMMEDIATELY OUTSIDE OF THE STRUCTURE, BY OTHERS.**

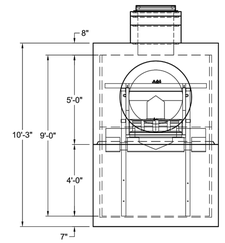


LEFT END VIEW

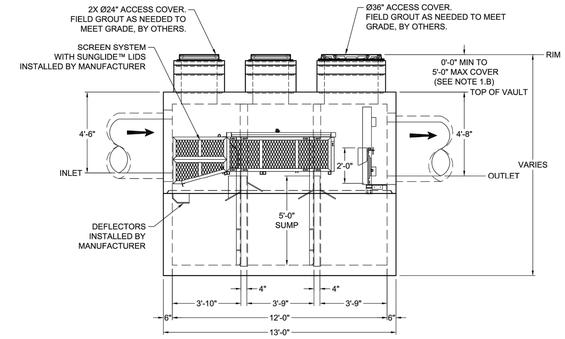


ELEVATION VIEW

NOTES:

1. DESIGN LOADINGS:
   A. AASHTO HS-20-44 (WITH IMPACT)
   B. DESIGN SOIL COVER: 5'-0" MAXIMUM
   C. ASSUMED WATER TABLE: BELOW BASE OF PRECAST (ENGINEER-OF-RECORD TO CONFIRM SITE WATER TABLE ELEVATION)
   D. LATERAL EARTH PRESSURE: 45 PCF (DRAINED)
   E. LATERAL LIVE LOAD SURCHARGE: 80 PSF (APPLIED TO 8'-0" BELOW GRADE)
   F. NO LATERAL SURCHARGE FROM ADJACENT BUILDINGS, WALLS, PIERS, OR FOUNDATIONS.
2. CONCRETE 28-DAY MINIMUM COMPRESSIVE STRENGTH: 5,000 PSI MINIMUM.
3. REINFORCING: REBAR, ASTM A615/A706, GRADE 60
4. CEMENT: ASTM C150
5. REQ'D ALLOWABLE SOIL BEARING CAPACITY: 2,500 PSF
6. REFERENCE STANDARD:
   A. ASTM C890
   B. ASTM C913
   C. ACI 318-14
7. THIS STRUCTURE IS DESIGNED TO THE PARAMETERS NOTED HEREIN. ENGINEER-OF-RECORD SHALL VERIFY THAT NOTED PARAMETERS MEET OR EXCEED PROJECT REQUIREMENTS. IF DESIGN PARAMETERS ARE INCORRECT, REVIEWING ENGINEER/AUTHORITY SHALL NOTIFY OLDCASTLE INFRASTRUCTURE UPON REVIEW OF THIS SUBMITTAL.
8. OVERSIZED HOLES TO ACCOMMODATE SPECIFIC PIPE TYPE MUST BE CONCENTRIC TO PIPE ID. AFTER PIPES ARE INSTALLED, ALL ANNULAR SPACES SHALL BE FILLED WITH A MINIMUM OF 3,000 PSI CONCRETE FOR FULL THICKNESS OF PRECAST WALLS. PIPES ARE TO BE FLUSH WITH THE INSIDE SURFACE OF THE CONCRETE STRUCTURE.
9. CONTRACTOR RESPONSIBLE TO VERIFY ALL SIZES, LOCATIONS, AND ELEVATIONS OF OPENINGS.
10. CONTRACTOR RESPONSIBLE TO ENSURE ADEQUATE BEARING SURFACE IS PROVIDED (I.E. COMPACTED AND LEVEL PER PROJECT SPECIFICATIONS).
11. SECTION HEIGHTS, SLAB/WALL THICKNESSES, AND KEYWAYS ARE SUBJECT TO CHANGE AS REQUIRED FOR SITE REQUIREMENTS AND/OR DUE TO PRODUCT AVAILABILITY AND PRODUCTION FACILITY CONSTRAINTS.
12. FOR SITE SPECIFIC DRAWINGS WITH DETAILED STRUCTURE DIMENSIONS AND WEIGHTS, PLEASE CONTACT OLDCASTLE INFRASTRUCTURE.
13. MAXIMUM PICK WEIGHT: 23,750 LBS. (* COMBINED WEIGHT INCLUDES BAFFLE WALLS AND PRODUCT INTERNALS.)
14. INTERNALS SHALL CONSIST OF A FLOATING SKIMMER, FLOW DEFLECTORS, ELEVATED CENTRAL SCREEN SYSTEM AND SLIDING LIDS. THESE COMPONENTS EFFECTIVELY REDUCE HEAD LOSS, INCREASE POLLUTANT REMOVAL AND SIMPLIFY MAINTENANCE.

- PRELIMINARY - NOT FOR CONSTRUCTION

Oldcastle Infrastructure
A CRH COMPANY
Ph: 800.579.8819 | www.oldcastleinfrastructure.com/stormwater
THIS DOCUMENT IS THE PROPERTY OF OLDCASTLE INFRASTRUCTURE, INC. AND IS TO BE USED FOR THE PROJECT AND SPECIFIC USE FOR WHICH IT IS SHALL NOT BE USED IN ANY WAY INJURIOUS TO THE INTERESTS OF, OR WITHOUT THE WRITTEN PERMISSION OF OLDCASTLE INFRASTRUCTURE, INC. COPYRIGHT © 2024 OLDCASTLE INFRASTRUCTURE, INC. ALL RIGHTS RESERVED.

Nutrient Separating Baffle Box® NSBB-612

| CUSTOMER | | | | | | |
|---|---|---|---|---|---|---|
| Bowman | | | | | | |
| PROJECT NAME | | | | | | |
| Ocean Breeze Ranch (OBR) - Bonsall, CA | | | | | | |
| DATE | JOB NO. | MFG | DESIGN | DRAWN | CHECKED | SALES ORDER |
| 6/6/24 | 070-FO | PPS | AFD | AFD | | |
| SHEET NAME | | | | REVISION | | SHEET |
| 21-603205-NSBB-612_Basin 2H-1 | | | | REV DATE | | 1 OF 1 |

THIS PRODUCT IS PROTECTED BY ONE OR MORE OF THE FOLLOWING US PATENT(S): 6,428,692; 7,270,747; 7,981,283; 8,142,666; 8,366,923; 8,491,797; 7,846,327; 8,034,236; RELATED FOREIGN PATENTS, OR OTHER PATENTS PENDING.

BMP 2B-2
NUTRIENT SEPARATING BAFFLE BOX-612
DETAIL

BMP 2H-1
NUTRIENT SEPARATING BAFFLE BOX-612
DETAIL

REGISTERED PROFESSIONAL ENGINEER — GREGORY M. SHIELDS — No. 42951 — Exp. 03-31-26 — CIVIL — STATE OF CALIFORNIA

Bowman
Bowman Consulting Group Ltd
701 B Street, Suite 800
San Diego, CA 92101
Phone: 619.235.6471
Bowman.com
© 2024 Bowman Consulting Group Ltd

| GREGORY M. SHIELDS, R.C.E. 42951 | DATE | REGISTRATION EXPIRES 3-31-26 | DESIGNED BY: | PM REVIEW: | SURVEY REVIEW: |
|---|---|---|---|---|---|
| | | | MC/LG | RR/IM | SS |

**RECORD PLAN**

BY: _____ DATE: _____
NAME
R.C.E. _____
EXPIRES: _____

**COUNTY APPROVED CHANGES**

| NO. | DESCRIPTION: | APPROVED BY: | DATE: |
|---|---|---|---|
| | | | |

**BENCH MARK**

DESCRIPTION: FOUND 2" BRASS DISK MARKED "CALIF." "DEPT OF TRANSPORTATION" "SDGPS 03" "1991" "NE 15/76" & "1980" LOCATION: BRASS DISK IN CONCRETE SIDEWALK ON NE CORNER BRIDGE ABUTMENT, 2.5' FROM FACE OF CURB & 2.5' FROM EXPANSION JOINT. BRIDGE IS FOR HWY 76 AND SPANS INTERSTATE I-15.
RECORD FROM: ROS 21563
ELEVATION: 308.26
DATUM: NAVD 88

**PRIVATE CONTRACT**

| SHEET 210 | COUNTY OF SAN DIEGO DEPARTMENT OF PUBLIC WORKS | 243 SHEETS |
|---|---|---|

BMP DETAILS FOR:
OCEAN BREEZE RANCH-TM 5615

CALIFORNIA COORDINATE INDEX 410-1701,410-1707,410-1713 414-1703,414-1707,414-1719 418-1713,418-1719

APPROVED FOR: WILLIAM P. MORGAN, COUNTY ENGINEER
BY: _____ DATE: _____

ENGINEER OF WORK
DATE: _____
GREGORY SHIELDS, RCE NO. C42951, EXP. 03-31-26

PDS2020-LDGRMJ-30295
GRADING PERMIT NO:

*Last save by LOURDES GARCIA, File Name Q:\CA-SAND-PD\Projects\4192.10\Engr\DWG_Plans\Grading Rough\7 BMP SHEETS\4192.10 0210_RG-BMP.dwg, Date Last Saved 10/31/2024 10:13:17 PM, Date Plotted Last 11/7/2024 4:36:26 PM*

Q:\CA-SAND-PD\Projects\4192.10\Engr\DWG_Plans\Grading Rough\7 BMP SHEETS\4192.10 0210_RG-BMP.dwg, 11/7/2024 4:36:25 PM, _AutoCAD PDF (General Documentation).pc3

## 3.0 Cover Sheet and General Requirements

- Standard SWQMP Form Table 2 and PDP SWQMP Form Table 3 require the identification of pollutant-generating sources and associated BMPs for development projects.

- In some cases, County staff may request additional, more detailed documentation of source control BMP design details. If requested, applicants must submit a completed copy of this Source Control BMP Worksheet. This requirement can be satisfied either by submitting a copy of BMPDM Attachment E.1 (Source Control BMP Requirements) or equivalent documentation at the County's discretion.

- Submit this documentation using this cover sheet.

- Sources and BMPs must also be shown as applicable on DMA exhibits and construction plans (see Attachment 2).

## 4.0 Cover Sheet

- If this SWQMP implements any requirements of an earlier master SWQMP submittal, a copy of that previous submittal must be attached under cover of this sheet.

## 5.0 General Requirements

- Each Priority Development Project (PDP) must provide a description of existing site conditions and proposed changes to them, including changes to topography and drainage.
- Has a **Drainage Report** has been prepared for the PDP?

  ☒ **Yes**

  - Review of the Drainage Report must be concurrent with the PDP SWQMP.
  - Include the summary page of the Drainage Report with this cover page, and provide the following information:

    Title: OCEAN BREEZE RANCH DRAINAGE STUDY

    Prepared By: PROJECT DESIGN CONSULTANTS

    Date: October 31, 2024

  - Do not complete the rest of this attachment (also exclude these additional pages from your submittal). Additional documentation of site and drainage conditions is not required unless requested by County staff.

  ☐ **No** -- Complete and submit the remainder of this attachment below.

*Table 2: Hydrology Results*

| OCEAN BREEZE RANCH HYDROLOGY SUMMARY | | | | | | | | | | |
|---|---|---|---|---|---|---|---|---|---|---|
| QUADRANT | EXISTING | | | PROPOSED | | | | | | |
| NORTHWEST | SYSTEM | AREA | Q100 | SYSTEM | COMMENT | AREA | TC | Q100 (UNDETAINED) | AVE C | Q100 (INCLUDING DETENTION) |
| | 100 | 400.3 | 538.1 | 1300 | Bypass Drainage & System 1000 (includes 1100&1200) | 301.2 | 19.8 | 439.2 | 0.41 | 354.9 |
| | | | | 2006 | Includes drainage to Basins 2C+2D+2I+2E+2F+2G & Bypass | 68.2 | 12.9 | 134.1 | 0.42 | 117.2 |
| | | | | 2200 | BASIN 2A (Includes Sys 2100) | 19.4 | 8.5 | 69.2 | 0.58 | 13.5 |
| | | | | 2300 | BASIN 2B (INCLUDES SYS2400) | 18.5 | 9.0 | 61.6 | 0.56 | 26.4 |
| | SUBTOTAL | 400.3 | 538.1 | SUBTOTAL | | 407.3 | | 704.1 | | 512.0 |
| | 200 | 197.7 | 167.5 | 3500 | BYPASS (+SYS 3450) | 182.9 | 32.9 | 150.6 | 0.32 | 144.6 |
| | | | | 3000 | BASIN 3A | 3 | 6.7 | 13.2 | 0.61 | 3 |
| | SUBTOTAL | 197.7 | 167.5 | SUBTOTAL | | 185.9 | | 163.8 | | 147.6 |
| | TOTAL | 598.0 | 705.6 | TOTAL | | 593.2 | | 867.9 | | 659.6 |
| NORTHEAST | SYSTEM | AREA | Q100 | SYSTEM | COMMENT | AREA | TC | Q100 (UNDETAINED) | AVE C | Q100 (INCLUDING DETENTION) |
| | 300 | 109.2 | 108.1 | 3150 | Includes SYS 3550 Bypass & Basin 3B+3J+3K | 110.4 | 25.2 | 120.4 | 0.36 | 120.4 |
| | SUBTOTAL | 109.2 | 108.1 | SUBTOTAL | | 110.4 | | 120.4 | | 120.4 |
| | 400 | 146.7 | 216.6 | 3260 | Included System 3200 to Basin 3c at Node 3216) | 110.1 | 17.7 | 148.0 | 0.35 | 137.9 |
| | | | | 3270 | Bypass System | 20.5 | 12.6 | 34.9 | 0.36 | 34.9 |
| | | | | 3300 | AT NODE 3327 (Basin 3D) | 15.8 | 10 | 46.2 | 0.53 | 19.6 |
| | SUBTOTAL | 146.7 | 216.6 | SUBTOTAL | | 146.4 | | 229.1 | | 192.4 |
| | 500 | 587.7 | 836.7 | 3600 | BYPASS | 586.6 | 17.1 | 835.6 | 0.36 | 835.6 |
| | 550 | 171.2 | 198 | 3650 | BYPASS | 172.9 | 19.7 | 185.9 | 0.30 | 185.9 |
| | SUBTOTAL | 758.9 | 1034.7 | SUBTOTAL | | 759.5 | | 1021.5 | | 1021.5 |
| | | | | 3350 | BASIN 3E | 1.5 | 5.8 | 8.1 | 0.68 | 1.5 |
| | 3400 | 18.8 | 35.0 | 3400 | BYPASS | 18.4 | 8.3 | 38.8 | 0.34 | 38.8 |
| | 3700 | 8.4 | 18.7 | 3700 | BYPASS | 6.7 | 7.6 | 15.4 | 0.35 | 15.4 |
| | | | | 3750 | BASIN 3F | 1.5 | 5.9 | 9.1 | 0.78 | 9.1 |
| | 3800 | 13.0 | 27.3 | 3800 | BYPASS | 12.8 | 9.4 | 24.6 | 0.33 | 24.6 |
| | 3900 | 5.8 | 11.5 | 3900 | BYPASS | 5.1 | 10 | 10.7 | 0.38 | 10.7 |
| | | | | 3950 | BASIN 3G | 2.2 | 13.1 | 7.2 | 0.70 | 3.8 |
| | 3050 | 4.8 | 9.5 | 3050 | BYPASS | 4.1 | 9.2 | 7.7 | 0.32 | 7.7 |
| | 3100 | 22.4 | 41.5 | 3100 | BYPASS | 22.3 | 10.3 | 40.6 | 0.33 | 40.6 |
| | 3130 | 13.8 | 22.5 | 3130 | BYPASS | 13 | 10.7 | 20.3 | 0.29 | 20.3 |
| | SUBTOTAL | 87.0 | 166 | SUBTOTAL | | 87.6 | | 182.5 | | 172.5 |
| | TOTAL | 1101.8 | 1525.4 | TOTAL | | 1103.9 | | 1553.5 | | 1506.8 |
| | | | | | | | | | | |
| SOUTHWEST | SYSTEM | AREA | Q100 | SYSTEM | COMMENT | AREA | TC | Q100 (UNDETAINED) | AVE C | Q100 (INCLUDING DETENTION) |
| | 4030 | 19.3 | 31.8 | 4030 | | 18.9 | 12 | 30.7 | 0.33 | 30.7 |
| | 4040 | 5.1 | 10.5 | 4040 | | 4.3 | 7.5 | 9.5 | 0.33 | 9.5 |
| | 4050 | 1.8 | 4 | 4050 | | 2.1 | 10.9 | 4 | 0.36 | 4 |
| | 4060 | 5.8 | 14.7 | | | | | | | |
| | SUBTOTAL | 32.0 | 61.0 | SUBTOTAL | | 25.3 | | 44.2 | | 44.2 |
| | 4000 | 29.6 | 41.6 | 4060 | | 21.9 | 13.2 | 32.2 | 0.32 | 32.2 |
| | | | | 4016 | Includes Detention of Sys 4000 - Basin 2H | 14 | 13.4 | 38.6 | 0.60 | 23.3 |
| | 4080 | 3.7 | 11.3 | 4080 | | 3.4 | 4.5 | 11.2 | 0.35 | 11.2 |
| | | | | | | | | | | |
| | | | | | | | | | | |
| | TOTAL | 65.3 | 113.9 | TOTAL | | 64.6 | | 126.2 | | 110.9 |
| SOUTHEAST | SYSTEM | AREA | Q100 | SYSTEM | COMMENT | AREA | TC | Q100 (UNDETAINED) | AVE C | Q100 (INCLUDING DETENTION) |
| | 1100 | 23.9 | 40.5 | 5000 | Includes Sys 5005 - Basin 3I | 26.1 | 10.7 | 41.5 | 0.30 | 41.5 |
| | 1800 | 1.6 | 5.6 | 5050 | WILL NOT INCLUDE DETENTION | 0.9 | 9.2 | 3 | 0.57 | 3 |
| | TOTAL | 25.5 | 46.1 | TOTAL | | 27 | | 44.5 | | 44.5 |

## 6.0 General Requirements

- Use this attachment to document all proposed (1) self-mitigating, (2) de minimis, and (3) self-retaining DMAs. Indicate under "DMA Compliance Option" below which design options will be used to satisfy structural performance requirements for one or more DMA.

| DMA Compliance Option | Required Sub-attachments or Printouts | BMPDM Design Resources |
|---|---|---|
| ☒ **Self-mitigating** | • Sub-attachment 6.1 | • BMPDM Section 5.2.1 |
| ☐ **De minimis** | • Sub-attachment 6.2 | • BMPDM Section 5.2.2 |
| ☒ **Self-retaining**[1] | • Sub-attachment 6.3 | • BMPDM Section 5.2.3 (all options) |
| **SSD-BMP Type(s)** | | |
| ☒ **Impervious Area Dispersion** | • DCV calculations from SSD-BMP tool<br>• Dispersion Areas calculations from SSD-BMP tool | • Fact Sheet SD-B (Appendix E.8)<br>• Appendix I |
| ☐ **Tree Wells** | • DCV calculations from SSD-BMP tool<br>• Tree Well calculations from SSD-BMP tool | • Fact Sheet SD-A (Appendix E.7)<br>• Appendix I |

- Submit this cover page and all "Required Sub-attachments or Printouts" listed for each selected DMA compliance option.
- See the BMPDM sections and appendices listed under "BMPDM Design Resources" for additional explanation of design requirements. Each constructed feature must fully satisfy the requirements described in these resources, and any other guidance identified by the County.
- DMA Exhibits and Construction Plans: DMAs, features, and BMPs identified and described in this attachment must be shown on DMA Exhibits and all applicable construction plans submitted for the project. See Attachment 2 for additional instruction on exhibits and plans.

[1] If "Self-retaining" is selected, also choose the types of Significant Site Design BMPs (SSD-BMPs) to be used. SSD-BMPs are Site Design BMPs that are sized and constructed to fully satisfy all applicable Structural Performance Standards for a DMA.

**6.1 Self-mitigating DMAs (complete this page once for ALL self-mitigating DMAs)**

Self-mitigating DMAs consist of natural or landscaped areas that drain directly offsite or to the public storm drain system. These DMAs are excluded from DCV calculations.

- Provide the information requested below for each proposed self-mitigating DMA. Add rows or copy the table if additional entries are needed.

| *DMA #* | *a. DMA Area ($ft^2$)* | *Incidental Impervious Area* | | *Permit # and Sheet #* |
|---|---|---|---|---|
| | | *b. Size($ft^2$)* | *c. % (b/a*100)* | |
| **SEE TABLE ON FOLLOWING PAGE** | | | | |

- "DMA #", "DMA Area", and "Permit # and Sheet #" are required for all DMAs listed.
- "Incidental Impervious Area" calculations are required only where applicable (see below).
- Each self-mitigating DMA must <u>fully</u> satisfy all design requirements and restrictions described in BMPDM Section 5.2.1 and any other guidance or instruction identified by the County. Check the boxes below to confirm that all required conditions are satisfied <u>for every DMA listed</u>.

☒ Each DMA is hydraulically separate from other DMAs that contain permanent storm water pollutant control BMPs.

<u>Natural and Landscaped Areas</u>

☒ Each DMA consists solely of natural or landscaped areas, except for incidental impervious areas (see below).

☒ Each area drains directly offsite or to the public storm drain system.

☒ Soils are undisturbed native topsoil, or disturbed soils that have been amended and aerated to promote water retention characteristics equivalent to undisturbed native topsoil.

☒ Vegetation is native and/or non-native/non-invasive drought tolerant species that do not require regular application of fertilizers and pesticides.

<u>Incidental Impervious Areas (if applicable; see above)</u>

Minor impervious areas may be permitted within the DMA if they satisfy the following criteria:

☒ They are not hydraulically connected to other impervious areas (unless it is a storm water conveyance system such as a brow ditch).

☒ They comprise less than 5% of the total DMA. Calculate the % incidental impervious area in the table above (c= b/a). DMAs are <u>not</u> self-mitigating if this area is 5% or greater.

| DMA # | a. DMA Area ($ft^2$) | Incidental Impervious Area | | Permit # and Sheet # |
|---|---|---|---|---|
| | | b. Size($ft^2$) | c. % (b/a*100) | |
| 23 | 47920 | 0 | 0 | Grading PDS2020-LDGRMJ-30295, Sheets 188-192 |
| 24 | 452 | 0 | 0 | Grading PDS2020-LDGRMJ-30295, Sheets 188-192 |
| 25 | 20221 | 0 | 0 | Grading PDS2020-LDGRMJ-30295, Sheets 188-192 |
| 26 | 37692 | 0 | 0 | Grading PDS2020-LDGRMJ-30295, Sheets 188-192 |
| 27 | 52807 | 0 | 0 | Grading PDS2020-LDGRMJ-30295, Sheets 188-192 |
| 28 | 33866 | 0 | 0 | Grading PDS2020-LDGRMJ-30295, Sheets 188-192 |
| 29 | 149577 | 0 | 0 | Grading PDS2020-LDGRMJ-30295, Sheets 188-192 |
| 30 | 3064 | 0 | 0 | Grading PDS2020-LDGRMJ-30295, Sheets 188-192 |
| 31 | 42474 | 0 | 0 | Grading PDS2020-LDGRMJ-30295, Sheets 188-192 |
| 32 | 26387 | 0 | 0 | Grading PDS2020-LDGRMJ-30295, Sheets 188-192 |
| 33 | 9789 | 0 | 0 | Grading PDS2020-LDGRMJ-30295, Sheets 188-192 |
| 34 | 17213 | 0 | 0 | Grading PDS2020-LDGRMJ-30295, Sheets 188-192 |
| 36 | 5426 | 0 | 0 | Grading PDS2020-LDGRMJ-30295, Sheets 188-192 |
| 37 | 10382 | 0 | 0 | Grading PDS2020-LDGRMJ-30295, Sheets 188-192 |
| 38 | 5931 | 0 | 0 | Grading PDS2020-LDGRMJ-30295, Sheets 188-192 |
| 39 | 20353 | 0 | 0 | Grading PDS2020-LDGRMJ-30295, Sheets 188-192 |
| 40 | 14274 | 0 | 0 | Grading PDS2020-LDGRMJ-30295, Sheets 188-192 |
| 41 | 59073 | 0 | 0 | Grading PDS2020-LDGRMJ-30295, Sheets 188-192 |
| 42 | 12804 | 0 | 0 | Grading PDS2020-LDGRMJ-30295, Sheets 188-192 |
| 43 | 1331 | 0 | 0 | Grading PDS2020-LDGRMJ-30295, Sheets 188-192 |
| 44 | 11528 | 0 | 0 | Grading PDS2020-LDGRMJ-30295, Sheets 188-192 |
| 45 | 3789 | 0 | 0 | Grading PDS2020-LDGRMJ-30295, Sheets 188-192 |
| 46 | 11101 | 0 | 0 | Grading PDS2020-LDGRMJ-30295, Sheets 188-192 |
| 47 | 58000 | 0 | 0 | Grading PDS2020-LDGRMJ-30295, Sheets 188-192 |
| 48 | 4741 | 0 | 0 | Grading PDS2020-LDGRMJ-30295, Sheets 188-192 |
| 49 | 7905 | 0 | 0 | Grading PDS2020-LDGRMJ-30295, Sheets 188-192 |
| 50 | 7773 | 0 | 0 | Grading PDS2020-LDGRMJ-30295, Sheets 188-192 |
| 51 | 5087 | 0 | 0 | Grading PDS2020-LDGRMJ-30295, Sheets 188-192 |
| 52 | 9396 | 0 | 0 | Grading PDS2020-LDGRMJ-30295, Sheets 188-192 |
| 53 | 7880 | 0 | 0 | Grading PDS2020-LDGRMJ-30295, Sheets 188-192 |
| 54 | 32074 | 0 | 0 | Grading PDS2020-LDGRMJ-30295, Sheets 188-192 |
| 55 | 7883 | 0 | 0 | Grading PDS2020-LDGRMJ-30295, Sheets 188-192 |
| 56 | 2314 | 0 | 0 | Grading PDS2020-LDGRMJ-30295, Sheets 188-192 |
| 57 | 9490 | 0 | 0 | Grading PDS2020-LDGRMJ-30295, Sheets 188-192 |
| 58 | 73151 | 0 | 0 | Grading PDS2020-LDGRMJ-30295, Sheets 188-192 |
| 59 | 77020 | 0 | 0 | Grading PDS2020-LDGRMJ-30295, Sheets 188-192 |
| 60 | 10364 | 0 | 0 | Grading PDS2020-LDGRMJ-30295, Sheets 188-192 |
| 61 | 10186 | 0 | 0 | Grading PDS2020-LDGRMJ-30295, Sheets 188-192 |
| 62 | 4051 | 0 | 0 | Grading PDS2020-LDGRMJ-30295, Sheets 188-192 |
| 63 | 31274 | 0 | 0 | Grading PDS2020-LDGRMJ-30295, Sheets 188-192 |
| 64 | 3914 | 0 | 0 | Grading PDS2020-LDGRMJ-30295, Sheets 188-192 |
| 65 | 1599 | 0 | 0 | Grading PDS2020-LDGRMJ-30295, Sheets 188-192 |
| 66 | 77910 | 0 | 0 | Grading PDS2020-LDGRMJ-30295, Sheets 188-192 |
| 67 | 7281 | 0 | 0 | Grading PDS2020-LDGRMJ-30295, Sheets 188-192 |
| 68 | 9071 | 0 | 0 | Grading PDS2020-LDGRMJ-30295, Sheets 188-192 |
| 69 | 1340 | 0 | 0 | Grading PDS2020-LDGRMJ-30295, Sheets 188-192 |
| 70 | 5058 | 0 | 0 | Grading PDS2020-LDGRMJ-30295, Sheets 188-192 |
| 71 | 20958 | 0 | 0 | Grading PDS2020-LDGRMJ-30295, Sheets 188-192 |
| 72 | 10614 | 0 | 0 | Grading PDS2020-LDGRMJ-30295, Sheets 188-192 |
| 91 | 3525 | 0 | 0 | Grading PDS2020-LDGRMJ-30295, Sheets 188-192 |
| 95 | 139912 | 0 | 0 | Grading PDS2020-LDGRMJ-30295, Sheets 188-192 |
| 96 | 646 | 0 | 0 | Grading PDS2020-LDGRMJ-30295, Sheets 188-192 |
| 97 | 559 | 0 | 0 | Grading PDS2020-LDGRMJ-30295, Sheets 188-192 |
| 98 | 16771 | 0 | 0 | Grading PDS2020-LDGRMJ-30295, Sheets 188-192 |
| 99 | 368 | 0 | 0 | Grading PDS2020-LDGRMJ-30295, Sheets 188-192 |
| 100 | 3174 | 0 | 0 | Grading PDS2020-LDGRMJ-30295, Sheets 188-192 |
| 101 | 2085 | 0 | 0 | Grading PDS2020-LDGRMJ-30295, Sheets 188-192 |
| 102 | 19756 | 0 | 0 | Grading PDS2020-LDGRMJ-30295, Sheets 188-192 |
| 103 | 1933 | 0 | 0 | Grading PDS2020-LDGRMJ-30295, Sheets 188-192 |
| 104 | 3182 | 0 | 0 | Grading PDS2020-LDGRMJ-30295, Sheets 188-192 |
| 105 | 62351 | 0 | 0 | Grading PDS2020-LDGRMJ-30295, Sheets 188-192 |

## 6.3 Self-retaining DMAs using Significant Site Design BMPs

Self-retaining DMAs use Site Design BMPs to fully-retain the entire DCV, at a minimum. Site Design BMPs that fully retain the DCV, at a minimum, therefore replacing the need for a Structural BMP (S-BMP), are classified as Significant Site Design BMPs (SSD-BMPs). To satisfy pollutant control requirements only, self-retaining means retention of the entire DCV. However, under some circumstances, a self-retaining DMA can also satisfy hydromodification management requirements by implementing BMPs that retain a greater volume of runoff.

- Provide the information requested below for each proposed self-retaining DMA. Add rows or copy the table if additional entries are needed.

| DMA # | DMA Area ($ft^2$) | **BMP Type** (choose one per DMA) | | *Permit # and Sheet #* |
|---|---|---|---|---|
| | | **Dispersion Area (Att. 6.3.1)** | **Tree Wells (Att. 6.3.2)** | |
| 84 | | ☒ | ☐ | PDS2020-LDGRMJ-30295 Sheets 188-192 |
| 85 | | ☒ | ☐ | PDS2020-LDGRMJ-30295 Sheets 188-192 |
| 86 | | ☒ | ☐ | PDS2020-LDGRMJ-30295 Sheets 188-192 |
| 88 | | ☒ | ☐ | PDS2020-LDGRMJ-30295 Sheets 188-192 |
| 89 | | ☒ | ☐ | PDS2020-LDGRMJ-30295 Sheets 188-192 |
| | | ☐ | ☐ | |
| | | ☐ | ☐ | |
| | | ☐ | ☐ | |
| | | ☐ | ☐ | |
| | | ☐ | ☐ | |
| | | ☐ | ☐ | |
| | | ☐ | ☐ | |
| | | ☐ | ☐ | |
| | | ☐ | ☐ | |
| | | ☐ | ☐ | |

Copy and Paste table here for additional DMAs

- "DMA #", "DMA Area", and "Permit # and Sheet #" are required.
- Select one BMP Type per DMA. Provide detailed documentation for each DMA in Attachments 6.3.1 (Impervious Dispersion Areas) and/or 6.3.2 (Tree Wells) below.
- Each self-retaining DMA must fully satisfy all design requirements and restrictions described in BMPDM Section 5.2.3, applicable BMPDM Appendix E Fact Sheets, BMPDM Appendix I, and any

*6.3.1 Self-retaining DMAs with Impervious Dispersion Areas*

Impervious area dispersion (dispersion) refers to the practice of effectively disconnecting impervious areas from directly draining to the storm drain system by routing runoff from impervious areas such as rooftops (through downspout disconnection), walkways, and driveways onto the surface of adjacent pervious areas. The intent is to slow runoff discharges and reduce volumes. Dispersion with partial or full infiltration results in significant volume reduction by means of infiltration and evapotranspiration. When adequately sized, dispersion can also be used to satisfy both the pollutant control and hydromodification management structural performance standards for a DMA.

- Each self-retaining DMA with impervious area dispersion must fully satisfy all design requirements and restrictions described in BMPDM Section 5.2.3, Fact Sheet SD-B: Impervious Area Dispersion, and any other guidance or instruction identified by the County.
- Documentation of compliance with all applicable conditions must be submitted with this sub-attachment using the ***Summary Sheet for DMAs with Impervious Area Dispersion*** on the next page. One version of this Summary Sheet must be completed for each applicable DMA.
- Applicants are responsible to comply with all other applicable requirements, regardless of whether they are included in the summary sheet.
- The following applies if the dispersion area is **native soil** (SD-B in Appendix E):
    - For pollutant control only, the DMA is considered self-retaining if the impervious to pervious ratio is:
        - 2:1 when the pervious area is composed of Hydrologic Soil Group A
        - 1:1 when the pervious area is composed of Hydrologic Soil Group B
- The following applies if the dispersion area includes **amended soil** (SD-B in Appendix E):
    - DMAs using impervious area dispersion can be considered to meet both pollutant control and hydromodification flow control requirements if the impervious to pervious area ratio is 1:1 or less and all other design requirements of SD-B are satisfied, including 11 inches of amended soil.

**Summary Sheet for Self-retaining DMAs with Impervious Area Dispersion**

Attach Printouts from SSD-BMP tool below

- DCV calculations from SSD-BMP tool
- Dispersion Areas calculations from SSD-BMP tool

| SSD-BMP Automated Worksheet I-1: Step 1. Calculation of Design Capture Volume (V1.0) | | | | | | | | | | | | | |
|---|---|---|---|---|---|---|---|---|---|---|---|---|---|
| **Category** | **#** | **Description** | *i* | *ii* | *iii* | *iv* | *v* | *vi* | *vii* | *viii* | *ix* | *x* | **Units** |
| **Standard Drainage Basin Inputs** | 1 | Drainage Basin ID or Name | 84 | 85 | 86 | | 88 | 89 | 90 | | | | unitless |
| | 2 | 85th Percentile 24-hr Storm Depth | 0.70 | 0.70 | 0.70 | | 0.70 | 0.70 | 0.70 | | | | inches |
| | 3 | Is Hydromodification Control Applicable? | Yes | Yes | Yes | | Yes | Yes | Yes | | | | yes/no |
| | 4 | Impervious Surfaces Not Directed to Dispersion Area (C=0.90) | | | | | | | | | | | sq-ft |
| | 5 | Semi-Pervious Surfaces Not Serving as Dispersion Area (C=0.30) | | | | | | | | | | | sq-ft |
| | 6 | Engineered Pervious Surfaces Not Serving as Dispersion Area (C=0.10) | | | | | | | | | | | sq-ft |
| | 7 | Natural Type A Soil Not Serving as Dispersion Area (C=0.10) | 9,394 | 1,501 | 6,082 | | | | | | | | sq-ft |
| | 8 | Natural Type B Soil Not Serving as Dispersion Area (C=0.14) | | | | | | | | | | | sq-ft |
| | 9 | Natural Type C Soil Not Serving as Dispersion Area (C=0.23) | | | | | | | | | | | sq-ft |
| | 10 | Natural Type D Soil Not Serving as Dispersion Area (C=0.30) | | | | | 2,491 | 3,257 | 12,677 | | | | sq-ft |
| **SSD-BMPs Proposed** | 11 | Does Tributary Incorporate Dispersion and/or Rain Barrels? | Yes | Yes | Yes | | Yes | Yes | Yes | | | | yes/no |
| | 12 | Does Tributary Incorporate Tree Wells? | No | No | No | | No | No | No | | | | yes/no |
| **Dispersion Area & Rain Barrel Inputs (Optional)** | 13 | Impervious Surfaces **Directed to Dispersion Area** per SD-B (Ci=0.90) | 24,375 | 5,912 | 15,847 | | 5,610 | 6,600 | 14,252 | | | | sq-ft |
| | 14 | Semi-Pervious Surfaces **Serving as Dispersion Area** per SD-B (Ci=0.30) | | | | | | | | | | | sq-ft |
| | 15 | Engineered Pervious Surfaces **Serving as Dispersion Area** per SD-B (Ci=0.10) | 15,063 | | 9,778 | | 3,660 | 5,070 | 7,633 | | | | sq-ft |
| | 16 | Natural Type A Soil **Serving as Dispersion Area** per SD-B (Ci=0.10) | | 6,051 | | | | | | | | | sq-ft |
| | 17 | Natural Type B Soil **Serving as Dispersion Area** per SD-B (Ci=0.14) | | | | | | | | | | | sq-ft |
| | 18 | Natural Type C Soil **Serving as Dispersion Area** per SD-B (Ci=0.23) | | | | | | | | | | | sq-ft |
| | 19 | Natural Type D Soil **Serving as Dispersion Area** per SD-B (Ci=0.30) | | | | | | | | | | | sq-ft |
| | 20 | Number of Rain Barrels Proposed per SD-E | | | | | | | | | | | # |
| | 21 | Average Rain Barrel Size | | | | | | | | | | | gal |
| **Initial Runoff Factor Calculation** | 22 | Total Tributary Area | 48,832 | 13,464 | 31,707 | 0 | 11,761 | 14,927 | 34,562 | 0 | 0 | 0 | sq-ft |
| | 23 | Initial Runoff Factor for Standard Drainage Areas | 0.10 | 0.10 | 0.10 | 0.00 | 0.30 | 0.30 | 0.30 | 0.00 | 0.00 | 0.00 | unitless |
| | 24 | Initial Runoff Factor for Dispersed & Dispersion Areas | 0.59 | 0.50 | 0.59 | 0.00 | 0.58 | 0.55 | 0.62 | 0.00 | 0.00 | 0.00 | unitless |
| | 25 | Initial Weighted Runoff Factor | 0.50 | 0.46 | 0.50 | 0.00 | 0.52 | 0.50 | 0.50 | 0.00 | 0.00 | 0.00 | unitless |
| | 26 | Initial Design Capture Volume | 1,424 | 361 | 925 | 0 | 357 | 435 | 1,008 | 0 | 0 | 0 | cubic-feet |
| **Dispersion Area Adjustment & Rain Barrel Adjustment** | 27 | Total Impervious Area Dispersed to Pervious Surface | 24,375 | 5,912 | 15,847 | 0 | 5,610 | 6,600 | 14,252 | 0 | 0 | 0 | sq-ft |
| | 28 | Total Pervious Dispersion Area | 15,063 | 6,051 | 9,778 | 0 | 3,660 | 5,070 | 7,633 | 0 | 0 | 0 | sq-ft |
| | 29 | Ratio of Dispersed Impervious Area to Pervious Dispersion Area for DCV Reduction | 1.60 | 1.00 | 1.60 | n/a | 1.50 | 1.30 | 1.90 | n/a | n/a | n/a | ratio |
| | 30 | Adjustment Factor for Dispersed & Dispersion Areas | 0.00 | 0.00 | 0.00 | 1.00 | 0.00 | 0.00 | 0.00 | 1.00 | 1.00 | 1.00 | ratio |
| | 31 | Runoff Factor After Dispersion Techniques | 0.02 | 0.01 | 0.02 | n/a | 0.06 | 0.07 | 0.11 | n/a | n/a | n/a | unitless |
| | 32 | Design Capture Volume After Dispersion Techniques | 57 | 8 | 37 | 0 | 41 | 61 | 222 | 0 | 0 | 0 | cubic-feet |
| | 33 | Total Rain Barrel Volume Reduction | 0 | 0 | 0 | 0 | 0 | 0 | 0 | 0 | 0 | 0 | cubic-feet |
| **Results** | 34 | Final Adjusted Runoff Factor | 0.02 | 0.01 | 0.02 | 0.00 | 0.06 | 0.07 | 0.11 | 0.00 | 0.00 | 0.00 | unitless |
| | 35 | Final Effective Tributary Area | 977 | 135 | 634 | 0 | 706 | 1,045 | 3,802 | 0 | 0 | 0 | sq-ft |
| | 36 | Initial Design Capture Volume Retained by Dispersion Area and Rain Barrel(s) | 1,367 | 353 | 888 | 0 | 316 | 374 | 786 | 0 | 0 | 0 | cubic-feet |
| | 37 | Remaining Design Capture Volume Tributary to Tree Well(s) | 57 | 8 | 37 | 0 | 41 | 61 | 222 | 0 | 0 | 0 | cubic-feet |

**No Warning Messages**

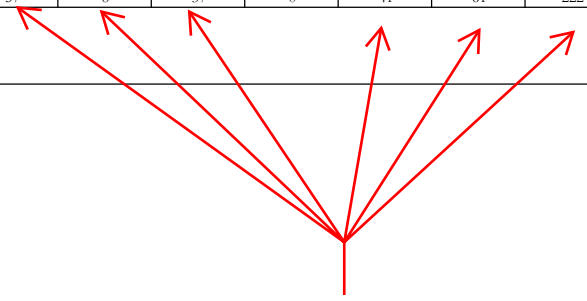

Remaining DCV is to be treated via Onsite Alternative Compliance. See Attachment 7 for additional 426 CF to be treated.

## SSD-BMP Automated Worksheet I-2: Step 2. Dispersion Area Validation (V1.0)

| Category | # | Description | i | ii | iii | iv | v | vi | vii | viii | ix | x | Units |
|---|---|---|---|---|---|---|---|---|---|---|---|---|---|
| Standard Dispersion Area Inputs | 1 | Drainage Basin ID or Name | 84 | 85 | 86 | - | 88 | 89 | 90 | - | - | - | unitless |
| | 2 | Final Design Capture Volume (DCV) | 57 | 8 | 37 | - | 41 | 61 | 222 | - | - | - | cubic-feet |
| | 3 | Is Hydromodification Control Applicable? | Yes | Yes | Yes | - | Yes | Yes | Yes | - | - | - | yes/no |
| | 4 | Total Impervious Area Dispersed to Pervious Surface | 24,375 | 5,912 | 15,847 | - | 5,610 | 6,600 | 14,252 | - | - | - | sq-ft |
| | 5 | Total Engineered Pervious Surface and/or Natural Soil Dispersion Area (Does Not Include Semi-Pervious Surfaces Serving as Dispersion Area) | 15,063 | 6,051 | 9,778 | - | 3,660 | 5,070 | 7,633 | - | - | - | sq-ft |
| | 6 | Ratio of Dispersed Impervious Area to Total Engineered Pervious Surface and/or Natural Soil Dispersion Area | 1.62 | 0.98 | 1.62 | - | 1.53 | 1.30 | 1.87 | - | - | - | unitless |
| | 7 | Dispersion Area Length (Length of Sheet Flow Across Dispersion Area) | 15 | 15 | 15 | 15 | 15 | 15 | 15 | 15 | | | feet |
| | 8 | Dispersion Area Slope | 0.5 | 0.5 | 0.5 | 0.5 | 0.5 | 0.5 | 0.5 | 0.5 | | | % |
| | 9 | Thickness of Amended Soil | 11 | 11 | 11 | 11 | 11 | 11 | 11 | 11 | | | inches |
| | 10 | How is Flow Dispersed Across Width of Dispersion Area (definitions below*)? | Sheet Flow | Sheet Flow | Sheet Flow | Sheet Flow | Sheet Flow | Sheet Flow | Sheet Flow | Sheet Flow | | | unitless |
| Results | 11 | Is DCV Requirement Fully Satisfied by Dispersion Area? | No | No | No | - | No | No | No | - | - | - | yes/no |
| | 12 | Is Hydromodification Control Requirement Satisfied by Dispersion Area? | No | No | No | - | No | No | No | - | - | - | yes/no |
| | 13 | Are Dispersion Area Length, Slope, and Thickness of Amended Soil (when applicable) Adequate? | Yes | Yes | Yes | - | Yes | Yes | Yes | - | - | - | yes/no |

Attention!

- [Line 2, Line 11] If Line 2 is not 0, DCV requirement is not satisfied by the dispersion area. Increase pervious dispersion area in Step 1. DCV or continue to Step 3. Tree Wells.

- [Line 6, Line 12] To satisfy hydromodification control, the DCV requirement must be fully satisfied AND the impervious to pervious ratio must be 1:1 or less. Provide a larger pervious dispersion area in Step 1. DCV or continue to Step 3. Tree Wells.

**Notes:**

***How is Flow Dispersed Across Width of Pervious Dispersion Area?**

| | |
|---|---|
| Sheet Flow: | Flow arrives as sheet flow across the width of the adjacent impervious area |
| Spreader(s): | Flow is discharged from flow spreader(s) across the width of the pervious area |
| Roof Drains: | Discharge from roof drains distributed across the width of the pervious area |
| Curb Cuts: | Discharge from curb cuts distributed across the width of the pervious area |
| Other: | Other (Describe in PDP SWQMP) |

## 7.0 General Requirements

- Submit this cover page and all required Sub-attachments for all structural BMPs proposed for the project.
- See the BMPDM sections and appendices listed under "BMPDM Design Resources" in the table below for additional explanation of design requirements. Constructed features must fully satisfy the requirements described in these resources, and any other guidance identified by the County.
- PDPs subject to hydromodification management requirements must also implement structural BMPs for flow control for hydromodification management. Completion of SWQMP Attachment 8 is also required for these BMPs.
- DMA Exhibits and Construction Plans: DMAs, features, and BMPs identified and described in this attachment must be shown on DMA Exhibits and all applicable construction plans submitted for the project. See Attachment 2 for additional instruction on exhibits and plans.
- Structural BMP Certification. All structural BMPs documented this attachment and in Attachment 8 must be certified by a registered engineer in Sub-attachment 7.1.
- Structural BMP Verification. Structural BMP installation must be verified by the County at the completion of construction. Applicants must complete an Installation Verification Form (Attachment 10).

| **Sub-attachments** (check all that are completed) | **Requirement** | **BMPDM Design Resources** |
|---|---|---|
| ☒ **7.1: Preparer's Certification** | Required | • N/A |
| ☒ **7.2: Structural BMP Strategy** | Required | • BMPDM Sections 5.1., 5.3, 5.4, and Chapter 6<br>• BMPDM Appendix E (pages E-78 through E-210) |
| ☒ **7.3: Structural BMP Checklist(s)** | Required | |
| ☒ **7.4: Stormwater Pollutant Control Worksheet Calculations** | Required | • BMPDM Appendix B |
| ☐ **7.5: Identification and Narrative of Receiving Water and Pollutants of Concern** | Required if flow-thru BMPs are proposed | • N/A |

## 7.1 Engineer of Work Certification for Structural BMPs

**Project Name** OCEAN BREEZE RANCH
**Permit Application Number** PDS2020-LDGRMJ-30295

**CERTIFICATION**

I hereby declare that I am the Engineer in Responsible Charge of design of structural storm water best management practices (BMPs) for this project, and that I have exercised responsible charge over the design of the BMPs as defined in Section 6703 of the Business and Professions Code, and that the design is consistent with the PDP requirements of the County of San Diego BMP Design Manual, which is a design manual for compliance with local County of San Diego Watershed Protection Ordinance (Sections 67.801 et seq.) and regional MS4 Permit (California Regional Water Quality Control Board San Diego Region Order No. R9-2013-0001 as amended by R9-2015-0001 and R9-2015-0100) requirements for storm water management. I have read and understand that the County of San Diego has adopted minimum requirements for managing urban runoff, including storm water, from land development activities, as described in the BMP Design Manual.

I certify that this PDP SWQMP has been completed to the best of my ability and accurately reflects the project being proposed and the applicable BMPs proposed to minimize the potentially negative impacts of this project's land development activities on water quality. I understand and acknowledge that the plan check review of this PDP SWQMP by County staff is confined to a review and does not relieve me, as the Engineer in Responsible Charge of design of structural storm water BMPs for this project, of my responsibilities for their design.

☒ In addition to the structural pollutant control BMPs described in this attachment, this certification applies to the Structural Hydromodification Management BMPs described in Attachment 8 (check if applicable).

RCE 71026 Exp. 06/30/25
Engineer of Work's Signature, PE Number & Expiration Date

CHELISA PACK
Print Name

PROJECT DESIGN CONSULTANTS, A BOWMAN COMPANY
Company




Engineer's Seal:

Date

## 7.2 Structural BMP Strategy

**7.2.1 Narrative Strategy** (Continue description on subsequent pages as necessary)

Describe the general strategy for structural BMP implementation at the project site. For pollutant control BMPs, your description must address the key points outlined in Section 5.1 of the BMP Design Manual, and the type of BMPs selected. For projects requiring hydromodification flow control BMPs, indicate whether pollutant control and flow control BMPs are integrated or separate.

This SWQMP covers all BMPs for the entire project site (in PAs 1-3), plus the equestrian area fire access road. Refer to Attachment 2.1 for the Drainage Management Area (DMA) Exhibits. For infiltration feasibility, a copy of the Geotechnical consultant's (Geocon's) updated infiltration study for OBR and their supplemental infiltration evaluation for PA3 and the hillside estate east of Sullivan Middle School is included in this attachment. All the proposed BMPs were evaluated on a BMP/DMA specific basis by the geotechnical engineer. The structural BMPs selected for OBR were determined per Geocon's recommendations. Note, harvest and reuse BMPs (referred to as "capture and use" BMPs in the County BMP Design Manual are not required since there are no structures over 9 stories in height proposed on this project.

The structural BMP implementation strategy entails utilizing mostly lined biofiltration basins, and one unlined biofiltration with partial retention basin (3C) for onsite treatment. Most of the basins will serve as dual purpose, by complying with both onsite pollutant control treatment requirements and hydromodification management requirements. The onsite basins exempted from hydromodification management requirements are all of the basins in Planning Area 2 (Basins 2A -2G and Basin 2I). The point of discharge for all of these basins at the San Luis Rey River is below the 10-year water surface elevation. Refer to the Hydromodification Exemption Exhibit in Attachment 9.1. Basins 3C and 3D were sized to accommodate the treatment of drainage from Dulin Road and the tributary future estate lots of PA 3 (with their associated assumed level of imperviousness). Per Geocon, most of the basins were determined to be restricted for infiltration (with the exception of 3C), refer to the infiltration evaluation.

For the roadway widening areas outside of the PAs but within the property boundary, there will be three biofiltration basins (one along the west end of West Lilac Road (Basin 2H) and one near Street A along West Lilac Road (Basin 1B) and one east of Sullivan Middle School (Basin 3H). Each of these areas will comply with pollutant treatment and hydromodification management requirements.

There are additional proposed impervious areas outside of the proposed planning areas. One improvement for the project includes a soil cement emergency access road through the existing Equestrian facility. The majority of the existing roadway is a very stable dirt roadway. The new roadway will generally follow the same alignment, with some minor deviations from the current alignment. However, the new soil cement emergency access road will be considered impervious from a stormwater mitigation perspective. It is anticipated that a portion of the soil cement roadway can be mitigated via SSD-BMPs with dispersion, and the rest of the soil cement roadway can be mitigated through onsite alternative compliance credits. For the SSD-Calculations, refer to Attachment 6.

Onsite Alternative Compliance:

Refer to the Alternative Compliance Exhibit located in this Attachment. There are a few areas within the project limits that will not be treated by a pollutant control BMP or SSD-BMP under developed conditions. There are several constraints which preclude treatment options at these locations. Under proposed conditions, Basins 2H, 3H, and 1B treat a portion of runon area. Using the Water Quality Equivalence (WQE) Guidance Document for Region 9, dated May 2018, the basins qualify for onsite alternative compliance. Refer to this Attachment for the WQE Worksheets and alternative compliance calculations. It was determined the volume earned from the treatment of the existing runon areas (identified as the alternative compliance project (ACP) tributary area) from Basins 2H, 3H, and 1B is higher than the proposed total untreated DCV by the other areas noted that will not have pollutant treatment. Therefore, the proposed impervious area from the road widening improvements and other miscellaneous improvements will therefore utilize the credits earned from the treatment of the existing runon area tributary to Basins 2H, 3H, and 1B. The Onsite Alternative Compliance exhibits are averaged over a composite site basis, since there are site constraints to where pollutant control BMPs can be located.

The BMP calculations are included in this attachment. Note, the worksheets included are from the County of San Diego's latest version of the BMP worksheet.

Several of the basin BMPs have a tributary area larger than the County's recommended 5-acre maximum. All these basins were sized in accordance with the County's BMP Manual. The runoff velocities into the basins will be reduced by using flat pipe slopes and providing energy dissipation. Basin pre-treatment options to alleviate concerns in regards to the more than 5-acres tributary area are included herein. Pre-treatment includes hydrodynamic separators for basins collecting more than 5 acres or more of runoff. The pre-treatment devices are sized based on the water quality flow rate.

Note that the project will include offsite traffic mitigation areas. The design for those improvements are addressed in two separate offsite PDP-Exempt SWQMPs. The project team proposes to address those offsite areas via the Green Street PDP-Exempt SWQMP process. For detailed information, refer to the offsite reports.

**7.2.2 Structural BMP Summary Table** (Complete for all proposed structural BMPs)

- List and provide the information requested below for all pollutant control and hydromodification management BMPs proposed for the project.
- For each BMP listed, complete the Structural BMP Checklist on the next page. Copy the Checklist as many times as needed.

| BMP ID # | DMA # | DMA Area ($ft^2$) | Structural BMP Type | | | | | | | Permit # and Sheet # |
|---|---|---|---|---|---|---|---|---|---|---|
| | | | Harvest and Use | Infiltration | Unlined Biofiltration | Lined Biofiltration | Flow-thru treatment | Hydromodification Management [1] | Other | |
| 1A | 1 | 2148474 | ☐ | ☐ | ☐ | ☒ | ☐ | ☐ | ☐ | PDS2020-LDGRMJ-30295, Sheet 193 |
| 1B | 20 | 316220 | ☐ | ☐ | ☐ | ☒ | ☐ | ☐ | ☐ | PDS2020-LDGRMJ-30295, Sheet 194 |
| 2A | 2 | 843694 | ☐ | ☐ | ☐ | ☒ | ☐ | ☐ | ☐ | PDS2020-LDGRMJ-30295, Sheet 195 |
| 2B | 3 | 807471 | ☐ | ☐ | ☐ | ☒ | ☐ | ☐ | ☐ | PDS2020-LDGRMJ-30295, Sheet 196 |
| 2C | 4 A,B | 257125 | ☐ | ☐ | ☐ | ☒ | ☐ | ☐ | ☐ | PDS2020-LDGRMJ-30295, Sheet 197 |
| 2D | 5 | 179783 | ☐ | ☐ | ☐ | ☒ | ☐ | ☐ | ☐ | PDS2020-LDGRMJ-30295, Sheet 198 |
| 2E | 6 | 126956 | ☐ | ☐ | ☐ | ☒ | ☐ | ☐ | ☐ | PDS2020-LDGRMJ-30295, Sheet 199 |
| 2F | 7 | 162298 | ☐ | ☐ | ☐ | ☒ | ☐ | ☐ | ☐ | PDS2020-LDGRMJ-30295, Sheet 199 |
| 2G | 8 | 159336 | ☐ | ☐ | ☐ | ☒ | ☐ | ☐ | ☐ | PDS2020-LDGRMJ-30295, Sheet 200 |
| 2H | 18 | 363788 | ☐ | ☐ | ☐ | ☒ | ☐ | ☐ | ☐ | PDS2020-LDGRMJ-30295, Sheet 200 |
| 2I | 16 | 143056 | ☐ | ☐ | ☐ | ☒ | ☐ | ☐ | ☐ | PDS2020-LDGRMJ-30295, Sheet 198 |
| 3A | 9 | 133297 | ☐ | ☐ | ☐ | ☒ | ☐ | ☐ | ☐ | PDS2020-LDGRMJ-30295, Sheet 201 |
| 3B | 10 | 52600 | ☐ | ☐ | ☐ | ☒ | ☐ | ☐ | ☐ | PDS2020-LDGRMJ-30295, Sheet 201 |
| 3C | 11 | 385553 | ☐ | ☐ | ☒ | ☐ | ☐ | ☐ | ☐ | PDS2020-LDGRMJ-30295, Sheet 202 |
| 3D | 12 | 645484 | ☐ | ☐ | ☐ | ☒ | ☐ | ☐ | ☐ | PDS2020-LDGRMJ-30295, Sheet 203 |
| 3E | 13 | 62991 | ☐ | ☐ | ☐ | ☒ | ☐ | ☐ | ☐ | PDS2020-LDGRMJ-30295, Sheet 204 |

[1] Hydromodification Management BMPs must be accompanied by BMPs that provide pollutant control.

| | | | | | | | | | | |
|---|---|---|---|---|---|---|---|---|---|---|
| 3F | 14 | 63664 | ☐ | ☐ | ☐ | ☒ | ☐ | ☐ | ☐ | PDS2020-LDGRMJ-30295, Sheet 204 |
| 3G | 15 | 93801 | ☐ | ☐ | ☐ | ☒ | ☐ | ☐ | ☐ | PDS2020-LDGRMJ-30295, Sheet 205 |
| 3H | 21 | 50955 | ☐ | ☐ | ☐ | ☒ | ☐ | ☐ | ☐ | PDS2020-LDGRMJ-30295, Sheet 205 |
| 3I | 17 | 143056 | ☐ | ☐ | ☐ | ☒ | ☐ | ☐ | ☐ | PDS2020-LDGRMJ-30295, Sheet 206 |
| 3J | 22 | 103117 | ☐ | ☐ | ☐ | ☒ | ☐ | ☐ | ☐ | PDS2020-LDGRMJ-30295, Sheet 207 |
| 3K | 19 | 109813 | ☐ | ☐ | ☐ | ☒ | ☐ | ☐ | ☐ | PDS2020-LDGRMJ-30295, Sheet 207 |
| 1A-1 | 1A-1 | 1556888 | ☐ | ☐ | ☐ | ☐ | ☒ | ☐ | ☐ | PDS2020-LDGRMJ-30295, Sheet 193 |
| 1A-2 | 1A-2 | 159597 | ☐ | ☐ | ☐ | ☐ | ☒ | ☐ | ☐ | PDS2020-LDGRMJ-30295, Sheet 193 |
| 1A-3 | 1A-3 | 257285 | ☐ | ☐ | ☐ | ☐ | ☒ | ☐ | ☐ | PDS2020-LDGRMJ-30295, Sheet 193 |
| 1B-1 | 1B-1 | 307168 | ☐ | ☐ | ☐ | ☐ | ☒ | ☐ | ☐ | PDS2020-LDGRMJ-30295, Sheet 194 |
| 2A-1 | 2A-1 | 297191 | ☐ | ☐ | ☐ | ☐ | ☒ | ☐ | ☐ | PDS2020-LDGRMJ-30295, Sheet 208 |
| 2A-2 | 2A-2 | 337297 | ☐ | ☐ | ☐ | ☐ | ☒ | ☐ | ☐ | PDS2020-LDGRMJ-30295, Sheet 208 |
| 2B-1 | 2B-1 | 509832 | ☐ | ☐ | ☐ | ☐ | ☒ | ☐ | ☐ | PDS2020-LDGRMJ-30295, Sheet 196 |
| 2B-2 | 2B-2 | 266729 | ☐ | ☐ | ☐ | ☐ | ☒ | ☐ | ☐ | PDS2020-LDGRMJ-30295, Sheet 210 |
| 2C-1 | 2C-1 | 141657 | ☐ | ☐ | ☐ | ☐ | ☒ | ☐ | ☐ | PDS2020-LDGRMJ-30295, Sheet 197 |
| 2H-1 | 2H-1 | 344433 | ☐ | ☐ | ☐ | ☐ | ☒ | ☐ | ☐ | PDS2020-LDGRMJ-30295, Sheet 210 |
| 3C-1 | 3C-1 | 370484 | ☐ | ☐ | ☐ | ☐ | ☒ | ☐ | ☐ | PDS2020-LDGRMJ-30295, Sheet 202 |
| 3D-1 | 3D-1 | 614257 | ☐ | ☐ | ☐ | ☐ | ☒ | ☐ | ☐ | PDS2020-LDGRMJ-30295, Sheet 203 |

Copy and Paste table here for additional BMPs

**7.3 Structural BMP Checklist** (Complete once for each proposed structural BMP)

| **Structural BMP ID #** | 1A | **Permit # and Sheet #** | PDS2020-LDGRMJ-30295, Sheet 193 |
|---|---|---|---|

**BMP Type**

**Infiltration**
- ☐ Infiltration basin (INF-1)
- ☐ Bioretention (INF-2)
- ☐ Permeable pavement (INF-3)

**Unlined Biofiltration**
- ☐ Biofiltration with partial retention (PR-1)

**Lined Biofiltration**
- ☒ Biofiltration (BF-1)
- ☒ Nutrient Sensitive Media Design (BF-2)
- ☐ Proprietary Biofiltration (BF-3)

**Harvest and Use**
- ☐ Cistern (HU-1)

**Flow-thru Treatment** (describe below)
- ☐ With prior lawful approval to meet earlier PDP requirements
- ☐ Pre-treatment/forebay for an onsite retention or biofiltration BMP[2]
- ☐ With alternative compliance

**Hydromodification Management**[3]
- ☐ Detention pond or vault
- ☐ **Other** (describe below)

**BMP Purpose**
- ☐ Pollutant control only
- ☐ Hydromodification control only
- ☒ Combined pollutant control and hydromodification
- ☐ Pre-treatment/forebay for another BMP
- ☐ Other (describe below)

**BMP Verification** (See BMPDM Section 8.3)

| | |
|---|---|
| Provide name and contact information for the party responsible to sign BMP verification forms | Chelisa Pack<br>Project Design Consultants<br>cpack@bowman.com<br>619-235-6471 |

**BMP Ownership and Maintenance** (See BMPDM Section 7.3 and Attachment 11)

| | | | | |
|---|---|---|---|---|
| BMP Maintenance Category | Cat. 1<br>☐ | Cat. 2<br>☒ | Cat. 3<br>☐ | Cat. 4<br>☐ |
| Final owner of BMP | ☒ HOA | ☐ Property Owner | ☐ County | ☐ Other (describe): |
| Maintenance of BMP into perpetuity | ☒ HOA | ☐ Property Owner | ☐ County | ☐ Other (describe): |

**Discussion** (As needed; Continue on subsequent pages as necessary)

[2] Indicate which onsite retention or biofiltration BMP the pre-treatment/forebay serves.
[3] Hydromodification Management BMPs must be accompanied by BMPs that provide pollutant control.

| **Structural BMP ID #** | 1B | **Permit # and Sheet #** | PDS2020-LDGRMJ-30295, Sheet 194 |
|---|---|---|---|

**BMP Type**

**Infiltration**
- ☐ Infiltration basin (INF-1)
- ☐ Bioretention (INF-2)
- ☐ Permeable pavement (INF-3)

**Unlined Biofiltration**
- ☐ Biofiltration with partial retention (PR-1)

**Lined Biofiltration**
- ☒ Biofiltration (BF-1)
- ☒ Nutrient Sensitive Media Design (BF-2)
- ☐ Proprietary Biofiltration (BF-3)

**Harvest and Use**
- ☐ Cistern (HU-1)

**Flow-thru Treatment** (describe below)
- ☐ With prior lawful approval to meet earlier PDP requirements
- ☐ Pre-treatment/forebay for an onsite retention or biofiltration BMP[2]
- ☐ With alternative compliance

**Hydromodification Management**[3]
- ☐ Detention pond or vault
- ☐ **Other** (describe below)

**BMP Purpose**
- ☐ Pollutant control only
- ☐ Hydromodification control only
- ☒ Combined pollutant control and hydromodification
- ☐ Pre-treatment/forebay for another BMP
- ☐ Other (describe below)

**BMP Verification** (See BMPDM Section 8.3)

| | |
|---|---|
| Provide name and contact information for the party responsible to sign BMP verification forms | Chelisa Pack<br>Project Design Consultants<br>cpack@bowman.com<br>619-235-6471 |

**BMP Ownership and Maintenance** (See BMPDM Section 7.3 and Attachment 11)

| | | | | |
|---|---|---|---|---|
| BMP Maintenance Category | Cat. 1<br>☐ | Cat. 2<br>☒ | Cat. 3<br>☐ | Cat. 4<br>☐ |
| Final owner of BMP | ☒ HOA | ☐ Property Owner | ☐ County | ☐ Other (describe): |
| Maintenance of BMP into perpetuity | ☒ HOA | ☐ Property Owner | ☐ County | ☐ Other (describe): |

**Discussion** (As needed; Continue on subsequent pages as necessary)

[2] Indicate which onsite retention or biofiltration BMP the pre-treatment/forebay serves.
[3] Hydromodification Management BMPs must be accompanied by BMPs that provide pollutant control.

| **Structural BMP ID #** | 2A | **Permit # and Sheet #** | PDS2020-LDGRMJ-30295, Sheet 195 |
|---|---|---|---|

**BMP Type**

**Infiltration**
- ☐ Infiltration basin (INF-1)
- ☐ Bioretention (INF-2)
- ☐ Permeable pavement (INF-3)

**Unlined Biofiltration**
- ☐ Biofiltration with partial retention (PR-1)

**Lined Biofiltration**
- ☒ Biofiltration (BF-1)
- ☒ Nutrient Sensitive Media Design (BF-2)
- ☐ Proprietary Biofiltration (BF-3)

**Harvest and Use**
- ☐ Cistern (HU-1)

**Flow-thru Treatment** (describe below)
- ☐ With prior lawful approval to meet earlier PDP requirements
- ☐ Pre-treatment/forebay for an onsite retention or biofiltration BMP[2]
- ☐ With alternative compliance

**Hydromodification Management**[3]
- ☐ Detention pond or vault
- ☐ **Other** (describe below)

**BMP Purpose**
- ☒ Pollutant control only
- ☐ Hydromodification control only
- ☐ Combined pollutant control and hydromodification
- ☐ Pre-treatment/forebay for another BMP
- ☐ Other (describe below)

**BMP Verification** (See BMPDM Section 8.3)

| | |
|---|---|
| Provide name and contact information for the party responsible to sign BMP verification forms | Chelisa Pack<br>Project Design Consultants<br>cpack@bowman.com<br>619-235-6471 |

**BMP Ownership and Maintenance** (See BMPDM Section 7.3 and Attachment 11)

| | | | | |
|---|---|---|---|---|
| BMP Maintenance Category | Cat. 1<br>☐ | Cat. 2<br>☒ | Cat. 3<br>☐ | Cat. 4<br>☐ |
| Final owner of BMP | ☒ HOA | ☐ Property Owner | ☐ County | ☐ Other (describe): |
| Maintenance of BMP into perpetuity | ☒ HOA | ☐ Property Owner | ☐ County | ☐ Other (describe): |

**Discussion** (As needed; Continue on subsequent pages as necessary)

[2] Indicate which onsite retention or biofiltration BMP the pre-treatment/forebay serves.
[3] Hydromodification Management BMPs must be accompanied by BMPs that provide pollutant control.

| **Structural BMP ID #** | 2B | **Permit # and Sheet #** | PDS2020-LDGRMJ-30295, Sheet 196 |
|---|---|---|---|

**BMP Type**

**Infiltration**
- ☐ Infiltration basin (INF-1)
- ☐ Bioretention (INF-2)
- ☐ Permeable pavement (INF-3)

**Unlined Biofiltration**
- ☐ Biofiltration with partial retention (PR-1)

**Lined Biofiltration**
- ☒ Biofiltration (BF-1)
- ☒ Nutrient Sensitive Media Design (BF-2)
- ☐ Proprietary Biofiltration (BF-3)

**Harvest and Use**
- ☐ Cistern (HU-1)

**Flow-thru Treatment** (describe below)
- ☐ With prior lawful approval to meet earlier PDP requirements
- ☐ Pre-treatment/forebay for an onsite retention or biofiltration BMP[2]
- ☐ With alternative compliance

**Hydromodification Management**[3]
- ☐ Detention pond or vault
- ☐ **Other** (describe below)

**BMP Purpose**
- ☒ Pollutant control only
- ☐ Hydromodification control only
- ☐ Combined pollutant control and hydromodification
- ☐ Pre-treatment/forebay for another BMP
- ☐ Other (describe below)

**BMP Verification** (See BMPDM Section 8.3)

| | |
|---|---|
| Provide name and contact information for the party responsible to sign BMP verification forms | Chelisa Pack<br>Project Design Consultants<br>cpack@bowman.com<br>619-235-6471 |

**BMP Ownership and Maintenance** (See BMPDM Section 7.3 and Attachment 11)

| | | | | |
|---|---|---|---|---|
| BMP Maintenance Category | Cat. 1<br>☐ | Cat. 2<br>☒ | Cat. 3<br>☐ | Cat. 4<br>☐ |
| Final owner of BMP | ☒ HOA | ☐ Property Owner | ☐ County | ☐ Other (describe): |
| Maintenance of BMP into perpetuity | ☒ HOA | ☐ Property Owner | ☐ County | ☐ Other (describe): |

**Discussion** (As needed; Continue on subsequent pages as necessary)

[2] Indicate which onsite retention or biofiltration BMP the pre-treatment/forebay serves.
[3] Hydromodification Management BMPs must be accompanied by BMPs that provide pollutant control.

| **Structural BMP ID #** | 2C | **Permit # and Sheet #** | PDS2020-LDGRMJ-30295, Sheet 197 |
|---|---|---|---|

**BMP Type**

**Infiltration**
- ☐ Infiltration basin (INF-1)
- ☐ Bioretention (INF-2)
- ☐ Permeable pavement (INF-3)

**Unlined Biofiltration**
- ☐ Biofiltration with partial retention (PR-1)

**Lined Biofiltration**
- ☒ Biofiltration (BF-1)
- ☒ Nutrient Sensitive Media Design (BF-2)
- ☐ Proprietary Biofiltration (BF-3)

**Harvest and Use**
- ☐ Cistern (HU-1)

**Flow-thru Treatment** (describe below)
- ☐ With prior lawful approval to meet earlier PDP requirements
- ☐ Pre-treatment/forebay for an onsite retention or biofiltration BMP[2]
- ☐ With alternative compliance

**Hydromodification Management**[3]
- ☐ Detention pond or vault
- ☐ **Other** (describe below)

**BMP Purpose**
- ☒ Pollutant control only
- ☐ Hydromodification control only
- ☐ Combined pollutant control and hydromodification
- ☐ Pre-treatment/forebay for another BMP
- ☐ Other (describe below)

**BMP Verification** (See BMPDM Section 8.3)

| | |
|---|---|
| Provide name and contact information for the party responsible to sign BMP verification forms | Chelisa Pack<br>Project Design Consultants<br>cpack@bowman.com<br>619-235-6471 |

**BMP Ownership and Maintenance** (See BMPDM Section 7.3 and Attachment 11)

| | | | | |
|---|---|---|---|---|
| BMP Maintenance Category | Cat. 1 ☐ | Cat. 2 ☒ | Cat. 3 ☐ | Cat. 4 ☐ |
| Final owner of BMP | ☒ HOA | ☐ Property Owner | ☐ County | ☐ Other (describe): |
| Maintenance of BMP into perpetuity | ☒ HOA | ☐ Property Owner | ☐ County | ☐ Other (describe): |

**Discussion** (As needed; Continue on subsequent pages as necessary)

[2] Indicate which onsite retention or biofiltration BMP the pre-treatment/forebay serves.
[3] Hydromodification Management BMPs must be accompanied by BMPs that provide pollutant control.

| **Structural BMP ID #** | 2D | **Permit # and Sheet #** | PDS2020-LDGRMJ-30295, Sheet 198 |
|---|---|---|---|

**BMP Type**

**Infiltration**
- ☐ Infiltration basin (INF-1)
- ☐ Bioretention (INF-2)
- ☐ Permeable pavement (INF-3)

**Unlined Biofiltration**
- ☐ Biofiltration with partial retention (PR-1)

**Lined Biofiltration**
- ☒ Biofiltration (BF-1)
- ☒ Nutrient Sensitive Media Design (BF-2)
- ☐ Proprietary Biofiltration (BF-3)

**Harvest and Use**
- ☐ Cistern (HU-1)

**Flow-thru Treatment** (describe below)
- ☐ With prior lawful approval to meet earlier PDP requirements
- ☐ Pre-treatment/forebay for an onsite retention or biofiltration BMP[2]
- ☐ With alternative compliance

**Hydromodification Management**[3]
- ☐ Detention pond or vault
- ☐ **Other** (describe below)

**BMP Purpose**
- ☒ Pollutant control only
- ☐ Hydromodification control only
- ☐ Combined pollutant control and hydromodification
- ☐ Pre-treatment/forebay for another BMP
- ☐ Other (describe below)

**BMP Verification** (See BMPDM Section 8.3)

| | |
|---|---|
| Provide name and contact information for the party responsible to sign BMP verification forms | Chelisa Pack<br>Project Design Consultants<br>cpack@bowman.com<br>619-235-6471 |

**BMP Ownership and Maintenance** (See BMPDM Section 7.3 and Attachment 11)

| | | | | |
|---|---|---|---|---|
| BMP Maintenance Category | Cat. 1<br>☐ | Cat. 2<br>☒ | Cat. 3<br>☐ | Cat. 4<br>☐ |
| Final owner of BMP | ☒ HOA | ☐ Property Owner | ☐ County | ☐ Other (describe): |
| Maintenance of BMP into perpetuity | ☒ HOA | ☐ Property Owner | ☐ County | ☐ Other (describe): |

**Discussion** (As needed; Continue on subsequent pages as necessary)

[2] Indicate which onsite retention or biofiltration BMP the pre-treatment/forebay serves.
[3] Hydromodification Management BMPs must be accompanied by BMPs that provide pollutant control.

| **Structural BMP ID #** | 2E | **Permit # and Sheet #** | PDS2020-LDGRMJ-30295, Sheet 199 |
|---|---|---|---|

**BMP Type**

**Infiltration**
- ☐ Infiltration basin (INF-1)
- ☐ Bioretention (INF-2)
- ☐ Permeable pavement (INF-3)

**Unlined Biofiltration**
- ☐ Biofiltration with partial retention (PR-1)

**Lined Biofiltration**
- ☒ Biofiltration (BF-1)
- ☒ Nutrient Sensitive Media Design (BF-2)
- ☐ Proprietary Biofiltration (BF-3)

**Harvest and Use**
- ☐ Cistern (HU-1)

**Flow-thru Treatment** (describe below)
- ☐ With prior lawful approval to meet earlier PDP requirements
- ☐ Pre-treatment/forebay for an onsite retention or biofiltration BMP[2]
- ☐ With alternative compliance

**Hydromodification Management**[3]
- ☐ Detention pond or vault
- ☐ **Other** (describe below)

**BMP Purpose**
- ☒ Pollutant control only
- ☐ Hydromodification control only
- ☐ Combined pollutant control and hydromodification
- ☐ Pre-treatment/forebay for another BMP
- ☐ Other (describe below)

**BMP Verification** (See BMPDM Section 8.3)

| | |
|---|---|
| Provide name and contact information for the party responsible to sign BMP verification forms | Chelisa Pack<br>Project Design Consultants<br>cpack@bowman.com<br>619-235-6471 |

**BMP Ownership and Maintenance** (See BMPDM Section 7.3 and Attachment 11)

| | | | | |
|---|---|---|---|---|
| BMP Maintenance Category | Cat. 1<br>☐ | Cat. 2<br>☒ | Cat. 3<br>☐ | Cat. 4<br>☐ |
| Final owner of BMP | ☒ HOA | ☐ Property Owner | ☐ County | ☐ Other (describe): |
| Maintenance of BMP into perpetuity | ☒ HOA | ☐ Property Owner | ☐ County | ☐ Other (describe): |

**Discussion** (As needed; Continue on subsequent pages as necessary)

[2] Indicate which onsite retention or biofiltration BMP the pre-treatment/forebay serves.
[3] Hydromodification Management BMPs must be accompanied by BMPs that provide pollutant control.

| **Structural BMP ID #** | 2F | **Permit # and Sheet #** | PDS2020-LDGRMJ-30295, Sheet 199 |
|---|---|---|---|

**BMP Type**

**Infiltration**
- ☐ Infiltration basin (INF-1)
- ☐ Bioretention (INF-2)
- ☐ Permeable pavement (INF-3)

**Unlined Biofiltration**
- ☐ Biofiltration with partial retention (PR-1)

**Lined Biofiltration**
- ☒ Biofiltration (BF-1)
- ☒ Nutrient Sensitive Media Design (BF-2)
- ☐ Proprietary Biofiltration (BF-3)

**Harvest and Use**
- ☐ Cistern (HU-1)

**Flow-thru Treatment** (describe below)
- ☐ With prior lawful approval to meet earlier PDP requirements
- ☐ Pre-treatment/forebay for an onsite retention or biofiltration BMP[2]
- ☐ With alternative compliance

**Hydromodification Management**[3]
- ☐ Detention pond or vault
- ☐ **Other** (describe below)

**BMP Purpose**
- ☒ Pollutant control only
- ☐ Hydromodification control only
- ☐ Combined pollutant control and hydromodification
- ☐ Pre-treatment/forebay for another BMP
- ☐ Other (describe below)

**BMP Verification** (See BMPDM Section 8.3)

| | |
|---|---|
| Provide name and contact information for the party responsible to sign BMP verification forms | Chelisa Pack<br>Project Design Consultants<br>cpack@bowman.com<br>619-235-6471 |

**BMP Ownership and Maintenance** (See BMPDM Section 7.3 and Attachment 11)

| | | | | |
|---|---|---|---|---|
| BMP Maintenance Category | Cat. 1 ☐ | Cat. 2 ☒ | Cat. 3 ☐ | Cat. 4 ☐ |
| Final owner of BMP | ☒ HOA | ☐ Property Owner | ☐ County | ☐ Other (describe): |
| Maintenance of BMP into perpetuity | ☒ HOA | ☐ Property Owner | ☐ County | ☐ Other (describe): |

**Discussion** (As needed; Continue on subsequent pages as necessary)

[2] Indicate which onsite retention or biofiltration BMP the pre-treatment/forebay serves.
[3] Hydromodification Management BMPs must be accompanied by BMPs that provide pollutant control.

| **Structural BMP ID #** | 2G | **Permit # and Sheet #** | PDS2020-LDGRMJ-30295, Sheet 200 |
|---|---|---|---|

**BMP Type**

**Infiltration**
- ☐ Infiltration basin (INF-1)
- ☐ Bioretention (INF-2)
- ☐ Permeable pavement (INF-3)

**Unlined Biofiltration**
- ☐ Biofiltration with partial retention (PR-1)

**Lined Biofiltration**
- ☒ Biofiltration (BF-1)
- ☒ Nutrient Sensitive Media Design (BF-2)
- ☐ Proprietary Biofiltration (BF-3)

**Harvest and Use**
- ☐ Cistern (HU-1)

**Flow-thru Treatment** (describe below)
- ☐ With prior lawful approval to meet earlier PDP requirements
- ☐ Pre-treatment/forebay for an onsite retention or biofiltration BMP[2]
- ☐ With alternative compliance

**Hydromodification Management**[3]
- ☐ Detention pond or vault
- ☐ **Other** (describe below)

**BMP Purpose**
- ☒ Pollutant control only
- ☐ Hydromodification control only
- ☐ Combined pollutant control and hydromodification
- ☐ Pre-treatment/forebay for another BMP
- ☐ Other (describe below)

**BMP Verification** (See BMPDM Section 8.3)

| | |
|---|---|
| Provide name and contact information for the party responsible to sign BMP verification forms | Chelisa Pack<br>Project Design Consultants<br>cpack@bowman.com<br>619-235-6471 |

**BMP Ownership and Maintenance** (See BMPDM Section 7.3 and Attachment 11)

| | | | | |
|---|---|---|---|---|
| BMP Maintenance Category | Cat. 1 ☐ | Cat. 2 ☒ | Cat. 3 ☐ | Cat. 4 ☐ |
| Final owner of BMP | ☒ HOA | ☐ Property Owner | ☐ County | ☐ Other (describe): |
| Maintenance of BMP into perpetuity | ☒ HOA | ☐ Property Owner | ☐ County | ☐ Other (describe): |

**Discussion** (As needed; Continue on subsequent pages as necessary)

[2] Indicate which onsite retention or biofiltration BMP the pre-treatment/forebay serves.
[3] Hydromodification Management BMPs must be accompanied by BMPs that provide pollutant control.

| **Structural BMP ID #** | 2H | **Permit # and Sheet #** | PDS2020-LDGRMJ-30295, Sheet 200 |
|---|---|---|---|

**BMP Type**

**Infiltration**
- ☐ Infiltration basin (INF-1)
- ☐ Bioretention (INF-2)
- ☐ Permeable pavement (INF-3)

**Unlined Biofiltration**
- ☐ Biofiltration with partial retention (PR-1)

**Lined Biofiltration**
- ☒ Biofiltration (BF-1)
- ☒ Nutrient Sensitive Media Design (BF-2)
- ☐ Proprietary Biofiltration (BF-3)

**Harvest and Use**
- ☐ Cistern (HU-1)

**Flow-thru Treatment** (describe below)
- ☐ With prior lawful approval to meet earlier PDP requirements
- ☐ Pre-treatment/forebay for an onsite retention or biofiltration BMP[2]
- ☐ With alternative compliance

**Hydromodification Management**[3]
- ☐ Detention pond or vault
- ☐ **Other** (describe below)

**BMP Purpose**
- ☐ Pollutant control only
- ☐ Hydromodification control only
- ☒ Combined pollutant control and hydromodification
- ☐ Pre-treatment/forebay for another BMP
- ☐ Other (describe below)

**BMP Verification** (See BMPDM Section 8.3)

| | |
|---|---|
| Provide name and contact information for the party responsible to sign BMP verification forms | Chelisa Pack<br>Project Design Consultants<br>cpack@bowman.com<br>619-235-6471 |

**BMP Ownership and Maintenance** (See BMPDM Section 7.3 and Attachment 11)

| | | | | |
|---|---|---|---|---|
| BMP Maintenance Category | Cat. 1<br>☐ | Cat. 2<br>☐ | Cat. 3<br>☐ | Cat. 4<br>☒ |
| Final owner of BMP | ☐ HOA | ☐ Property Owner | ☒ County | ☐ Other (describe): |
| Maintenance of BMP into perpetuity | ☐ HOA | ☐ Property Owner | ☒ County | ☐ Other (describe): |

**Discussion** (As needed; Continue on subsequent pages as necessary)

Proposed for County Field Ops maintenance.

[2] Indicate which onsite retention or biofiltration BMP the pre-treatment/forebay serves.

[3] Hydromodification Management BMPs must be accompanied by BMPs that provide pollutant control.

| **Structural BMP ID #** | 2I | **Permit # and Sheet #** | PDS2020-LDGRMJ-30295, Sheet 198 |
|---|---|---|---|

**BMP Type**

**Infiltration**
- ☐ Infiltration basin (INF-1)
- ☐ Bioretention (INF-2)
- ☐ Permeable pavement (INF-3)

**Unlined Biofiltration**
- ☐ Biofiltration with partial retention (PR-1)

**Lined Biofiltration**
- ☒ Biofiltration (BF-1)
- ☒ Nutrient Sensitive Media Design (BF-2)
- ☐ Proprietary Biofiltration (BF-3)

**Harvest and Use**
- ☐ Cistern (HU-1)

**Flow-thru Treatment** (describe below)
- ☐ With prior lawful approval to meet earlier PDP requirements
- ☐ Pre-treatment/forebay for an onsite retention or biofiltration BMP[2]
- ☐ With alternative compliance

**Hydromodification Management**[3]
- ☐ Detention pond or vault
- ☐ **Other** (describe below)

**BMP Purpose**
- ☒ Pollutant control only
- ☐ Hydromodification control only
- ☐ Combined pollutant control and hydromodification
- ☐ Pre-treatment/forebay for another BMP
- ☐ Other (describe below)

**BMP Verification** (See BMPDM Section 8.3)

| | |
|---|---|
| Provide name and contact information for the party responsible to sign BMP verification forms | Chelisa Pack<br>Project Design Consultants<br>cpack@bowman.com<br>619-235-6471 |

**BMP Ownership and Maintenance** (See BMPDM Section 7.3 and Attachment 11)

| BMP Maintenance Category | Cat. 1 ☐ | Cat. 2 ☒ | Cat. 3 ☐ | Cat. 4 ☐ |
|---|---|---|---|---|
| Final owner of BMP | ☒ HOA | ☐ Property Owner | ☐ County | ☐ Other (describe): |
| Maintenance of BMP into perpetuity | ☒ HOA | ☐ Property Owner | ☐ County | ☐ Other (describe): |

**Discussion** (As needed; Continue on subsequent pages as necessary)

[2] Indicate which onsite retention or biofiltration BMP the pre-treatment/forebay serves.
[3] Hydromodification Management BMPs must be accompanied by BMPs that provide pollutant control.

| **Structural BMP ID #** | 3A | **Permit # and Sheet #** | PDS2020-LDGRMJ-30295, Sheet 201 |
|---|---|---|---|

**BMP Type**

**Infiltration**
- ☐ Infiltration basin (INF-1)
- ☐ Bioretention (INF-2)
- ☐ Permeable pavement (INF-3)

**Unlined Biofiltration**
- ☐ Biofiltration with partial retention (PR-1)

**Lined Biofiltration**
- ☒ Biofiltration (BF-1)
- ☒ Nutrient Sensitive Media Design (BF-2)
- ☐ Proprietary Biofiltration (BF-3)

**Harvest and Use**
- ☐ Cistern (HU-1)

**Flow-thru Treatment** (describe below)
- ☐ With prior lawful approval to meet earlier PDP requirements
- ☐ Pre-treatment/forebay for an onsite retention or biofiltration BMP[2]
- ☐ With alternative compliance

**Hydromodification Management**[3]
- ☐ Detention pond or vault
- ☐ **Other** (describe below)

**BMP Purpose**
- ☐ Pollutant control only
- ☐ Hydromodification control only
- ☒ Combined pollutant control and hydromodification
- ☐ Pre-treatment/forebay for another BMP
- ☐ Other (describe below)

**BMP Verification** (See BMPDM Section 8.3)

| | |
|---|---|
| Provide name and contact information for the party responsible to sign BMP verification forms | Chelisa Pack<br>Project Design Consultants<br>cpack@bowman.com<br>619-235-6471 |

**BMP Ownership and Maintenance** (See BMPDM Section 7.3 and Attachment 11)

| | | | | |
|---|---|---|---|---|
| BMP Maintenance Category | Cat. 1<br>☐ | Cat. 2<br>☒ | Cat. 3<br>☐ | Cat. 4<br>☐ |
| Final owner of BMP | ☒ HOA | ☐ Property Owner | ☐ County | ☐ Other (describe): |
| Maintenance of BMP into perpetuity | ☒ HOA | ☐ Property Owner | ☐ County | ☐ Other (describe): |

**Discussion** (As needed; Continue on subsequent pages as necessary)

[2] Indicate which onsite retention or biofiltration BMP the pre-treatment/forebay serves.
[3] Hydromodification Management BMPs must be accompanied by BMPs that provide pollutant control.

| **Structural BMP ID #** | 3B | **Permit # and Sheet #** | PDS2020-LDGRMJ-30295, Sheet 201 |
|---|---|---|---|

**BMP Type**

**Infiltration**
- ☐ Infiltration basin (INF-1)
- ☐ Bioretention (INF-2)
- ☐ Permeable pavement (INF-3)

**Unlined Biofiltration**
- ☐ Biofiltration with partial retention (PR-1)

**Lined Biofiltration**
- ☒ Biofiltration (BF-1)
- ☒ Nutrient Sensitive Media Design (BF-2)
- ☐ Proprietary Biofiltration (BF-3)

**Harvest and Use**
- ☐ Cistern (HU-1)

**Flow-thru Treatment** (describe below)
- ☐ With prior lawful approval to meet earlier PDP requirements
- ☐ Pre-treatment/forebay for an onsite retention or biofiltration BMP[2]
- ☐ With alternative compliance

**Hydromodification Management**[3]
- ☐ Detention pond or vault
- ☐ **Other** (describe below)

**BMP Purpose**
- ☐ Pollutant control only
- ☐ Hydromodification control only
- ☒ Combined pollutant control and hydromodification
- ☐ Pre-treatment/forebay for another BMP
- ☐ Other (describe below)

**BMP Verification** (See BMPDM Section 8.3)

| | |
|---|---|
| Provide name and contact information for the party responsible to sign BMP verification forms | Chelisa Pack<br>Project Design Consultants<br>cpack@bowman.com<br>619-235-6471 |

**BMP Ownership and Maintenance** (See BMPDM Section 7.3 and Attachment 11)

| | | | | |
|---|---|---|---|---|
| BMP Maintenance Category | Cat. 1<br>☐ | Cat. 2<br>☒ | Cat. 3<br>☐ | Cat. 4<br>☐ |
| Final owner of BMP | ☒ HOA | ☐ Property Owner | ☐ County | ☐ Other (describe): |
| Maintenance of BMP into perpetuity | ☒ HOA | ☐ Property Owner | ☐ County | ☐ Other (describe): |

**Discussion** (As needed; Continue on subsequent pages as necessary)

[2] Indicate which onsite retention or biofiltration BMP the pre-treatment/forebay serves.
[3] Hydromodification Management BMPs must be accompanied by BMPs that provide pollutant control.

| **Structural BMP ID #** | 3C | **Permit # and Sheet #** | PDS2020-LDGRMJ-30295, Sheet 202 |
|---|---|---|---|

**BMP Type**

**Infiltration**
- ☐ Infiltration basin (INF-1)
- ☐ Bioretention (INF-2)
- ☐ Permeable pavement (INF-3)

**Unlined Biofiltration**
- ☒ Biofiltration with partial retention (PR-1)

**Lined Biofiltration**
- ☐ Biofiltration (BF-1)
- ☐ Nutrient Sensitive Media Design (BF-2)
- ☐ Proprietary Biofiltration (BF-3)

**Harvest and Use**
- ☐ Cistern (HU-1)

**Flow-thru Treatment** (describe below)
- ☐ With prior lawful approval to meet earlier PDP requirements
- ☐ Pre-treatment/forebay for an onsite retention or biofiltration BMP[2]
- ☐ With alternative compliance

**Hydromodification Management**[3]
- ☐ Detention pond or vault
- ☐ **Other** (describe below)

**BMP Purpose**
- ☐ Pollutant control only
- ☐ Hydromodification control only
- ☒ Combined pollutant control and hydromodification
- ☐ Pre-treatment/forebay for another BMP
- ☐ Other (describe below)

**BMP Verification** (See BMPDM Section 8.3)

| | |
|---|---|
| Provide name and contact information for the party responsible to sign BMP verification forms | Chelisa Pack<br>Project Design Consultants<br>cpack@bowman.com<br>619-235-6471 |

**BMP Ownership and Maintenance** (See BMPDM Section 7.3 and Attachment 11)

| BMP Maintenance Category | Cat. 1 | Cat. 2 | Cat. 3 | Cat. 4 |
|---|---|---|---|---|
| | ☐ | ☒ | ☐ | ☐ |
| Final owner of BMP | ☒ HOA | ☐ Property Owner | ☐ County | ☐ Other (describe): |
| Maintenance of BMP into perpetuity | ☒ HOA | ☐ Property Owner | ☐ County | ☐ Other (describe): |

**Discussion** (As needed; Continue on subsequent pages as necessary)

[2] Indicate which onsite retention or biofiltration BMP the pre-treatment/forebay serves.
[3] Hydromodification Management BMPs must be accompanied by BMPs that provide pollutant control.

| **Structural BMP ID #** | 3D | **Permit # and Sheet #** | PDS2020-LDGRMJ-30295, Sheet 203 |
|---|---|---|---|

**BMP Type**

**Infiltration**
- ☐ Infiltration basin (INF-1)
- ☐ Bioretention (INF-2)
- ☐ Permeable pavement (INF-3)

**Unlined Biofiltration**
- ☐ Biofiltration with partial retention (PR-1)

**Lined Biofiltration**
- ☒ Biofiltration (BF-1)
- ☒ Nutrient Sensitive Media Design (BF-2)
- ☐ Proprietary Biofiltration (BF-3)

**Harvest and Use**
- ☐ Cistern (HU-1)

**Flow-thru Treatment** (describe below)
- ☐ With prior lawful approval to meet earlier PDP requirements
- ☐ Pre-treatment/forebay for an onsite retention or biofiltration BMP[2]
- ☐ With alternative compliance

**Hydromodification Management**[3]
- ☐ Detention pond or vault
- ☐ **Other** (describe below)

**BMP Purpose**
- ☐ Pollutant control only
- ☐ Hydromodification control only
- ☒ Combined pollutant control and hydromodification
- ☐ Pre-treatment/forebay for another BMP
- ☐ Other (describe below)

**BMP Verification** (See BMPDM Section 8.3)

| | |
|---|---|
| Provide name and contact information for the party responsible to sign BMP verification forms | Chelisa Pack<br>Project Design Consultants<br>cpack@bowman.com<br>619-235-6471 |

**BMP Ownership and Maintenance** (See BMPDM Section 7.3 and Attachment 11)

| | | | | |
|---|---|---|---|---|
| BMP Maintenance Category | Cat. 1 ☐ | Cat. 2 ☒ | Cat. 3 ☐ | Cat. 4 ☐ |
| Final owner of BMP | ☒ HOA | ☐ Property Owner | ☐ County | ☐ Other (describe): |
| Maintenance of BMP into perpetuity | ☒ HOA | ☐ Property Owner | ☐ County | ☐ Other (describe): |

**Discussion** (As needed; Continue on subsequent pages as necessary)

[2] Indicate which onsite retention or biofiltration BMP the pre-treatment/forebay serves.
[3] Hydromodification Management BMPs must be accompanied by BMPs that provide pollutant control.

| **Structural BMP ID #** | 3E | **Permit # and Sheet #** | PDS2020-LDGRMJ-30295, Sheet 204 |
|---|---|---|---|

**BMP Type**

**Infiltration**
- ☐ Infiltration basin (INF-1)
- ☐ Bioretention (INF-2)
- ☐ Permeable pavement (INF-3)

**Unlined Biofiltration**
- ☐ Biofiltration with partial retention (PR-1)

**Lined Biofiltration**
- ☒ Biofiltration (BF-1)
- ☒ Nutrient Sensitive Media Design (BF-2)
- ☐ Proprietary Biofiltration (BF-3)

**Harvest and Use**
- ☐ Cistern (HU-1)

**Flow-thru Treatment** (describe below)
- ☐ With prior lawful approval to meet earlier PDP requirements
- ☐ Pre-treatment/forebay for an onsite retention or biofiltration BMP[2]
- ☐ With alternative compliance

**Hydromodification Management**[3]
- ☐ Detention pond or vault

☐ **Other** (describe below)

**BMP Purpose**
- ☐ Pollutant control only
- ☐ Hydromodification control only
- ☒ Combined pollutant control and hydromodification
- ☐ Pre-treatment/forebay for another BMP
- ☐ Other (describe below)

**BMP Verification** (See BMPDM Section 8.3)

| | |
|---|---|
| Provide name and contact information for the party responsible to sign BMP verification forms | Chelisa Pack<br>Project Design Consultants<br>cpack@bowman.com<br>619-235-6471 |

**BMP Ownership and Maintenance** (See BMPDM Section 7.3 and Attachment 11)

| | Cat. 1 | Cat. 2 | Cat. 3 | Cat. 4 |
|---|---|---|---|---|
| BMP Maintenance Category | ☐ | ☒ | ☐ | ☐ |

| | | | |
|---|---|---|---|
| Final owner of BMP | ☒ HOA | ☐ Property Owner | ☐ County |
| | ☐ Other (describe): | | |
| Maintenance of BMP into perpetuity | ☒ HOA | ☐ Property Owner | ☐ County |
| | ☐ Other (describe): | | |

**Discussion** (As needed; Continue on subsequent pages as necessary)

[2] Indicate which onsite retention or biofiltration BMP the pre-treatment/forebay serves.
[3] Hydromodification Management BMPs must be accompanied by BMPs that provide pollutant control.

| **Structural BMP ID #** | 3F | **Permit # and Sheet #** | PDS2020-LDGRMJ-30295, Sheet 204 |
|---|---|---|---|

**BMP Type**

**Infiltration**
- ☐ Infiltration basin (INF-1)
- ☐ Bioretention (INF-2)
- ☐ Permeable pavement (INF-3)

**Unlined Biofiltration**
- ☐ Biofiltration with partial retention (PR-1)

**Lined Biofiltration**
- ☒ Biofiltration (BF-1)
- ☒ Nutrient Sensitive Media Design (BF-2)
- ☐ Proprietary Biofiltration (BF-3)

**Harvest and Use**
- ☐ Cistern (HU-1)

**Flow-thru Treatment** (describe below)
- ☐ With prior lawful approval to meet earlier PDP requirements
- ☐ Pre-treatment/forebay for an onsite retention or biofiltration BMP[2]
- ☐ With alternative compliance

**Hydromodification Management**[3]
- ☒ Detention pond or vault
- ☐ **Other** (describe below)

**BMP Purpose**
- ☐ Pollutant control only
- ☐ Hydromodification control only
- ☒ Combined pollutant control and hydromodification
- ☐ Pre-treatment/forebay for another BMP
- ☐ Other (describe below)

**BMP Verification** (See BMPDM Section 8.3)

| | |
|---|---|
| Provide name and contact information for the party responsible to sign BMP verification forms | Chelisa Pack<br>Project Design Consultants<br>cpack@bowman.com<br>619-235-6471 |

**BMP Ownership and Maintenance** (See BMPDM Section 7.3 and Attachment 11)

| | | | | |
|---|---|---|---|---|
| BMP Maintenance Category | Cat. 1<br>☐ | Cat. 2<br>☒ | Cat. 3<br>☐ | Cat. 4<br>☐ |
| Final owner of BMP | ☒ HOA | ☐ Property Owner | ☐ County | ☐ Other (describe): |
| Maintenance of BMP into perpetuity | ☒ HOA | ☐ Property Owner | ☐ County | ☐ Other (describe): |

**Discussion** (As needed; Continue on subsequent pages as necessary)

[2] Indicate which onsite retention or biofiltration BMP the pre-treatment/forebay serves.
[3] Hydromodification Management BMPs must be accompanied by BMPs that provide pollutant control.

| **Structural BMP ID #** | 3G | **Permit # and Sheet #** | PDS2020-LDGRMJ-30295, Sheet 205 |
|---|---|---|---|

**BMP Type**

**Infiltration**
- ☐ Infiltration basin (INF-1)
- ☐ Bioretention (INF-2)
- ☐ Permeable pavement (INF-3)

**Unlined Biofiltration**
- ☐ Biofiltration with partial retention (PR-1)

**Lined Biofiltration**
- ☒ Biofiltration (BF-1)
- ☒ Nutrient Sensitive Media Design (BF-2)
- ☐ Proprietary Biofiltration (BF-3)

**Harvest and Use**
- ☐ Cistern (HU-1)

**Flow-thru Treatment** (describe below)
- ☐ With prior lawful approval to meet earlier PDP requirements
- ☐ Pre-treatment/forebay for an onsite retention or biofiltration BMP[2]
- ☐ With alternative compliance

**Hydromodification Management**[3]
- ☐ Detention pond or vault

☐ **Other** (describe below)

**BMP Purpose**
- ☐ Pollutant control only
- ☐ Hydromodification control only
- ☒ Combined pollutant control and hydromodification
- ☐ Pre-treatment/forebay for another BMP
- ☐ Other (describe below)

**BMP Verification** (See BMPDM Section 8.3)

| | |
|---|---|
| Provide name and contact information for the party responsible to sign BMP verification forms | Chelisa Pack<br>Project Design Consultants<br>cpack@bowman.com<br>619-235-6471 |

**BMP Ownership and Maintenance** (See BMPDM Section 7.3 and Attachment 11)

| | Cat. 1 | Cat. 2 | Cat. 3 | Cat. 4 |
|---|---|---|---|---|
| BMP Maintenance Category | ☐ | ☒ | ☐ | ☐ |
| Final owner of BMP | ☒ HOA | ☐ Property Owner | | ☐ County |
| | ☐ Other (describe): | | | |
| Maintenance of BMP into perpetuity | ☒ HOA | ☐ Property Owner | | ☐ County |
| | ☐ Other (describe): | | | |

**Discussion** (As needed; Continue on subsequent pages as necessary)

[2] Indicate which onsite retention or biofiltration BMP the pre-treatment/forebay serves.
[3] Hydromodification Management BMPs must be accompanied by BMPs that provide pollutant control.

| **Structural BMP ID #** | 3H | **Permit # and Sheet #** | PDS2020-LDGRMJ-30295, Sheet 205 |
|---|---|---|---|

**BMP Type**

**Infiltration**
- ☐ Infiltration basin (INF-1)
- ☐ Bioretention (INF-2)
- ☐ Permeable pavement (INF-3)

**Unlined Biofiltration**
- ☐ Biofiltration with partial retention (PR-1)

**Lined Biofiltration**
- ☒ Biofiltration (BF-1)
- ☒ Nutrient Sensitive Media Design (BF-2)
- ☐ Proprietary Biofiltration (BF-3)

**Harvest and Use**
- ☐ Cistern (HU-1)

**Flow-thru Treatment** (describe below)
- ☐ With prior lawful approval to meet earlier PDP requirements
- ☐ Pre-treatment/forebay for an onsite retention or biofiltration BMP[2]
- ☐ With alternative compliance

**Hydromodification Management**[3]
- ☐ Detention pond or vault
- ☐ **Other** (describe below)

**BMP Purpose**
- ☐ Pollutant control only
- ☐ Hydromodification control only
- ☒ Combined pollutant control and hydromodification
- ☐ Pre-treatment/forebay for another BMP
- ☐ Other (describe below)

**BMP Verification** (See BMPDM Section 8.3)

| | |
|---|---|
| Provide name and contact information for the party responsible to sign BMP verification forms | Chelisa Pack<br>Project Design Consultants<br>cpack@bowman.com<br>619-235-6471 |

**BMP Ownership and Maintenance** (See BMPDM Section 7.3 and Attachment 11)

| | | | | |
|---|---|---|---|---|
| BMP Maintenance Category | Cat. 1 ☐ | Cat. 2 ☐ | Cat. 3 ☐ | Cat. 4 ☒ |
| Final owner of BMP | ☐ HOA | ☐ Property Owner | ☒ County | ☐ Other (describe): |
| Maintenance of BMP into perpetuity | ☐ HOA | ☐ Property Owner | ☒ County | ☐ Other (describe): |

**Discussion** (As needed; Continue on subsequent pages as necessary)

Proposed for County Field Ops maintenance.

[2] Indicate which onsite retention or biofiltration BMP the pre-treatment/forebay serves.

[3] Hydromodification Management BMPs must be accompanied by BMPs that provide pollutant control.

| **Structural BMP ID #** | 3I | **Permit # and Sheet #** | PDS2020-LDGRMJ-30295, Sheet 206 |
|---|---|---|---|

**BMP Type**

**Infiltration**
- ☐ Infiltration basin (INF-1)
- ☐ Bioretention (INF-2)
- ☐ Permeable pavement (INF-3)

**Unlined Biofiltration**
- ☐ Biofiltration with partial retention (PR-1)

**Lined Biofiltration**
- ☒ Biofiltration (BF-1)
- ☒ Nutrient Sensitive Media Design (BF-2)
- ☐ Proprietary Biofiltration (BF-3)

**Harvest and Use**
- ☐ Cistern (HU-1)

**Flow-thru Treatment** (describe below)
- ☐ With prior lawful approval to meet earlier PDP requirements
- ☐ Pre-treatment/forebay for an onsite retention or biofiltration BMP[2]
- ☐ With alternative compliance

**Hydromodification Management**[3]
- ☐ Detention pond or vault
- ☐ **Other** (describe below)

**BMP Purpose**
- ☐ Pollutant control only
- ☐ Hydromodification control only
- ☒ Combined pollutant control and hydromodification
- ☐ Pre-treatment/forebay for another BMP
- ☐ Other (describe below)

**BMP Verification** (See BMPDM Section 8.3)

| | |
|---|---|
| Provide name and contact information for the party responsible to sign BMP verification forms | Chelisa Pack<br>Project Design Consultants<br>cpack@bowman.com<br>619-235-6471 |

**BMP Ownership and Maintenance** (See BMPDM Section 7.3 and Attachment 11)

| BMP Maintenance Category | Cat. 1 | Cat. 2 | Cat. 3 | Cat. 4 |
|---|---|---|---|---|
| | ☒ | ☐ | ☐ | ☐ |

| | | | |
|---|---|---|---|
| Final owner of BMP | ☐ HOA | ☒ Property Owner | ☐ County |
| | ☐ Other (describe): | | |
| Maintenance of BMP into perpetuity | ☐ HOA | ☒ Property Owner | ☐ County |
| | ☐ Other (describe): | | |

**Discussion** (As needed; Continue on subsequent pages as necessary)

[2] Indicate which onsite retention or biofiltration BMP the pre-treatment/forebay serves.
[3] Hydromodification Management BMPs must be accompanied by BMPs that provide pollutant control.

| **Structural BMP ID #** | 3J | **Permit # and Sheet #** | PDS2020-LDGRMJ-30295, Sheet 207 |
|---|---|---|---|

**BMP Type**

**Infiltration**
- ☐ Infiltration basin (INF-1)
- ☐ Bioretention (INF-2)
- ☐ Permeable pavement (INF-3)

**Unlined Biofiltration**
- ☐ Biofiltration with partial retention (PR-1)

**Lined Biofiltration**
- ☒ Biofiltration (BF-1)
- ☒ Nutrient Sensitive Media Design (BF-2)
- ☐ Proprietary Biofiltration (BF-3)

**Harvest and Use**
- ☐ Cistern (HU-1)

**Flow-thru Treatment** (describe below)
- ☐ With prior lawful approval to meet earlier PDP requirements
- ☐ Pre-treatment/forebay for an onsite retention or biofiltration BMP[2]
- ☐ With alternative compliance

**Hydromodification Management**[3]
- ☐ Detention pond or vault
- ☐ **Other** (describe below)

**BMP Purpose**
- ☐ Pollutant control only
- ☐ Hydromodification control only
- ☒ Combined pollutant control and hydromodification
- ☐ Pre-treatment/forebay for another BMP
- ☐ Other (describe below)

**BMP Verification** (See BMPDM Section 8.3)

| | |
|---|---|
| Provide name and contact information for the party responsible to sign BMP verification forms | Chelisa Pack<br>Project Design Consultants<br>cpack@bowman.com<br>619-235-6471 |

**BMP Ownership and Maintenance** (See BMPDM Section 7.3 and Attachment 11)

| BMP Maintenance Category | Cat. 1 | Cat. 2 | Cat. 3 | Cat. 4 |
|---|---|---|---|---|
| | ☒ | ☐ | ☐ | ☐ |

| | | | |
|---|---|---|---|
| Final owner of BMP | ☐ HOA | ☒ Property Owner | ☐ County |
| | ☐ Other (describe): | | |
| Maintenance of BMP into perpetuity | ☐ HOA | ☒ Property Owner | ☐ County |
| | ☐ Other (describe): | | |

**Discussion** (As needed; Continue on subsequent pages as necessary)

[2] Indicate which onsite retention or biofiltration BMP the pre-treatment/forebay serves.
[3] Hydromodification Management BMPs must be accompanied by BMPs that provide pollutant control.

| **Structural BMP ID #** | 3K | **Permit # and Sheet #** | PDS2020-LDGRMJ-30295, Sheet 207 |
|---|---|---|---|

**BMP Type**

**Infiltration**
- ☐ Infiltration basin (INF-1)
- ☐ Bioretention (INF-2)
- ☐ Permeable pavement (INF-3)

**Unlined Biofiltration**
- ☐ Biofiltration with partial retention (PR-1)

**Lined Biofiltration**
- ☒ Biofiltration (BF-1)
- ☒ Nutrient Sensitive Media Design (BF-2)
- ☐ Proprietary Biofiltration (BF-3)

**Harvest and Use**
- ☐ Cistern (HU-1)

**Flow-thru Treatment** (describe below)
- ☐ With prior lawful approval to meet earlier PDP requirements
- ☐ Pre-treatment/forebay for an onsite retention or biofiltration BMP[2]
- ☐ With alternative compliance

**Hydromodification Management**[3]
- ☐ Detention pond or vault
- ☐ **Other** (describe below)

**BMP Purpose**
- ☐ Pollutant control only
- ☐ Hydromodification control only
- ☒ Combined pollutant control and hydromodification
- ☐ Pre-treatment/forebay for another BMP
- ☐ Other (describe below)

**BMP Verification** (See BMPDM Section 8.3)

| | |
|---|---|
| Provide name and contact information for the party responsible to sign BMP verification forms | Chelisa Pack<br>Project Design Consultants<br>cpack@bowman.com<br>619-235-6471 |

**BMP Ownership and Maintenance** (See BMPDM Section 7.3 and Attachment 11)

| | | | | |
|---|---|---|---|---|
| BMP Maintenance Category | Cat. 1<br>☒ | Cat. 2<br>☐ | Cat. 3<br>☐ | Cat. 4<br>☐ |
| Final owner of BMP | ☐ HOA | ☒ Property Owner | ☐ County | ☐ Other (describe): |
| Maintenance of BMP into perpetuity | ☐ HOA | ☒ Property Owner | ☐ County | ☐ Other (describe): |

**Discussion** (As needed; Continue on subsequent pages as necessary)

[2] Indicate which onsite retention or biofiltration BMP the pre-treatment/forebay serves.
[3] Hydromodification Management BMPs must be accompanied by BMPs that provide pollutant control.

| **Structural BMP ID #** | 1A-1 | **Permit # and Sheet #** | PDS2020-LDGRMJ-30295, Sheet 193 |
|---|---|---|---|

**BMP Type**

**Infiltration**
- ☐ Infiltration basin (INF-1)
- ☐ Bioretention (INF-2)
- ☐ Permeable pavement (INF-3)

**Unlined Biofiltration**
- ☐ Biofiltration with partial retention (PR-1)

**Lined Biofiltration**
- ☐ Biofiltration (BF-1)
- ☐ Nutrient Sensitive Media Design (BF-2)
- ☐ Proprietary Biofiltration (BF-3)

**Harvest and Use**
- ☐ Cistern (HU-1)

**Flow-thru Treatment** (describe below)
- ☐ With prior lawful approval to meet earlier PDP requirements
- ☒ Pre-treatment/forebay for an onsite retention or biofiltration BMP[2]
- ☐ With alternative compliance

**Hydromodification Management**[3]
- ☐ Detention pond or vault
- ☐ **Other** (describe below)

**BMP Purpose**
- ☐ Pollutant control only
- ☐ Hydromodification control only
- ☐ Combined pollutant control and hydromodification
- ☒ Pre-treatment/forebay for another BMP
- ☐ Other (describe below)

**BMP Verification** (See BMPDM Section 8.3)

| | |
|---|---|
| Provide name and contact information for the party responsible to sign BMP verification forms | Chelisa Pack<br>Project Design Consultants<br>cpack@bowman.com<br>619-235-6471 |

**BMP Ownership and Maintenance** (See BMPDM Section 7.3 and Attachment 11)

| | | | | |
|---|---|---|---|---|
| BMP Maintenance Category | Cat. 1 ☐ | Cat. 2 ☒ | Cat. 3 ☐ | Cat. 4 ☐ |
| Final owner of BMP | ☒ HOA | ☐ Property Owner | ☐ County | ☐ Other (describe): |
| Maintenance of BMP into perpetuity | ☒ HOA | ☐ Property Owner | ☐ County | ☐ Other (describe): |

**Discussion** Upstream from biofiltration basin 1A

[2] Indicate which onsite retention or biofiltration BMP the pre-treatment/forebay serves.
[3] Hydromodification Management BMPs must be accompanied by BMPs that provide pollutant control.

| **Structural BMP ID #** | 1A-2 | **Permit # and Sheet #** | PDS2020-LDGRMJ-30295, Sheet 193 |
|---|---|---|---|

**BMP Type**

**Infiltration**
- ☐ Infiltration basin (INF-1)
- ☐ Bioretention (INF-2)
- ☐ Permeable pavement (INF-3)

**Unlined Biofiltration**
- ☐ Biofiltration with partial retention (PR-1)

**Lined Biofiltration**
- ☐ Biofiltration (BF-1)
- ☐ Nutrient Sensitive Media Design (BF-2)
- ☐ Proprietary Biofiltration (BF-3)

**Harvest and Use**
- ☐ Cistern (HU-1)

**Flow-thru Treatment** (describe below)
- ☐ With prior lawful approval to meet earlier PDP requirements
- ☒ Pre-treatment/forebay for an onsite retention or biofiltration BMP[2]
- ☐ With alternative compliance

**Hydromodification Management**[3]
- ☐ Detention pond or vault
- ☐ **Other** (describe below)

**BMP Purpose**
- ☐ Pollutant control only
- ☐ Hydromodification control only
- ☐ Combined pollutant control and hydromodification
- ☒ Pre-treatment/forebay for another BMP
- ☐ Other (describe below)

**BMP Verification** (See BMPDM Section 8.3)

| | |
|---|---|
| Provide name and contact information for the party responsible to sign BMP verification forms | Chelisa Pack<br>Project Design Consultants<br>cpack@bowman.com<br>619-235-6471 |

**BMP Ownership and Maintenance** (See BMPDM Section 7.3 and Attachment 11)

| | | | | |
|---|---|---|---|---|
| BMP Maintenance Category | Cat. 1 ☐ | Cat. 2 ☒ | Cat. 3 ☐ | Cat. 4 ☐ |
| Final owner of BMP | ☒ HOA | ☐ Property Owner | ☐ County | ☐ Other (describe): |
| Maintenance of BMP into perpetuity | ☒ HOA | ☐ Property Owner | ☐ County | ☐ Other (describe): |

**Discussion** Upstream from biofiltration basin 1A

[2] Indicate which onsite retention or biofiltration BMP the pre-treatment/forebay serves.
[3] Hydromodification Management BMPs must be accompanied by BMPs that provide pollutant control.

| **Structural BMP ID #** | 1A-3 | **Permit # and Sheet #** | PDS2020-LDGRMJ-30295, Sheet 193 |
|---|---|---|---|

**BMP Type**

**Infiltration**
- ☐ Infiltration basin (INF-1)
- ☐ Bioretention (INF-2)
- ☐ Permeable pavement (INF-3)

**Unlined Biofiltration**
- ☐ Biofiltration with partial retention (PR-1)

**Lined Biofiltration**
- ☐ Biofiltration (BF-1)
- ☐ Nutrient Sensitive Media Design (BF-2)
- ☐ Proprietary Biofiltration (BF-3)

**Harvest and Use**
- ☐ Cistern (HU-1)

**Flow-thru Treatment** (describe below)
- ☐ With prior lawful approval to meet earlier PDP requirements
- ☒ Pre-treatment/forebay for an onsite retention or biofiltration BMP[2]
- ☐ With alternative compliance

**Hydromodification Management**[3]
- ☐ Detention pond or vault
- ☐ **Other** (describe below)

**BMP Purpose**
- ☐ Pollutant control only
- ☐ Hydromodification control only
- ☐ Combined pollutant control and hydromodification
- ☒ Pre-treatment/forebay for another BMP
- ☐ Other (describe below)

**BMP Verification** (See BMPDM Section 8.3)

| | |
|---|---|
| Provide name and contact information for the party responsible to sign BMP verification forms | Chelisa Pack<br>Project Design Consultants<br>cpack@bowman.com<br>619-235-6471 |

**BMP Ownership and Maintenance** (See BMPDM Section 7.3 and Attachment 11)

| | | | | |
|---|---|---|---|---|
| BMP Maintenance Category | Cat. 1 ☐ | Cat. 2 ☒ | Cat. 3 ☐ | Cat. 4 ☐ |
| Final owner of BMP | ☒ HOA | ☐ Property Owner | ☐ County | ☐ Other (describe): |
| Maintenance of BMP into perpetuity | ☒ HOA | ☐ Property Owner | ☐ County | ☐ Other (describe): |

**Discussion** Upstream from biofiltration basin 1A

[2] Indicate which onsite retention or biofiltration BMP the pre-treatment/forebay serves.
[3] Hydromodification Management BMPs must be accompanied by BMPs that provide pollutant control.

| **Structural BMP ID #** | 1B-1 | **Permit # and Sheet #** | PDS2020-LDGRMJ-30295, Sheet 194 |
|---|---|---|---|

**BMP Type**

**Infiltration**
- ☐ Infiltration basin (INF-1)
- ☐ Bioretention (INF-2)
- ☐ Permeable pavement (INF-3)

**Unlined Biofiltration**
- ☐ Biofiltration with partial retention (PR-1)

**Lined Biofiltration**
- ☐ Biofiltration (BF-1)
- ☐ Nutrient Sensitive Media Design (BF-2)
- ☐ Proprietary Biofiltration (BF-3)

**Harvest and Use**
- ☐ Cistern (HU-1)

**Flow-thru Treatment** (describe below)
- ☐ With prior lawful approval to meet earlier PDP requirements
- ☒ Pre-treatment/forebay for an onsite retention or biofiltration BMP[2]
- ☐ With alternative compliance

**Hydromodification Management**[3]
- ☐ Detention pond or vault
- ☐ **Other** (describe below)

**BMP Purpose**
- ☐ Pollutant control only
- ☐ Hydromodification control only
- ☐ Combined pollutant control and hydromodification
- ☒ Pre-treatment/forebay for another BMP
- ☐ Other (describe below)

**BMP Verification** (See BMPDM Section 8.3)

| | |
|---|---|
| Provide name and contact information for the party responsible to sign BMP verification forms | Chelisa Pack<br>Project Design Consultants<br>cpack@bowman.com<br>619-235-6471 |

**BMP Ownership and Maintenance** (See BMPDM Section 7.3 and Attachment 11)

| | | | | |
|---|---|---|---|---|
| BMP Maintenance Category | Cat. 1 ☐ | Cat. 2 ☒ | Cat. 3 ☐ | Cat. 4 ☐ |
| Final owner of BMP | ☒ HOA | ☐ Property Owner | ☐ County | ☐ Other (describe): |
| Maintenance of BMP into perpetuity | ☒ HOA | ☐ Property Owner | ☐ County | ☐ Other (describe): |

**Discussion** Upstream from biofiltration basin 1B

[2] Indicate which onsite retention or biofiltration BMP the pre-treatment/forebay serves.
[3] Hydromodification Management BMPs must be accompanied by BMPs that provide pollutant control.

| **Structural BMP ID #** | 2A-1 | **Permit # and Sheet #** | PDS2020-LDGRMJ-30295, Sheet 208 |
|---|---|---|---|

**BMP Type**

**Infiltration**
- ☐ Infiltration basin (INF-1)
- ☐ Bioretention (INF-2)
- ☐ Permeable pavement (INF-3)

**Unlined Biofiltration**
- ☐ Biofiltration with partial retention (PR-1)

**Lined Biofiltration**
- ☐ Biofiltration (BF-1)
- ☐ Nutrient Sensitive Media Design (BF-2)
- ☐ Proprietary Biofiltration (BF-3)

**Harvest and Use**
- ☐ Cistern (HU-1)

**Flow-thru Treatment** (describe below)
- ☐ With prior lawful approval to meet earlier PDP requirements
- ☒ Pre-treatment/forebay for an onsite retention or biofiltration BMP[2]
- ☐ With alternative compliance

**Hydromodification Management**[3]
- ☐ Detention pond or vault
- ☐ **Other** (describe below)

**BMP Purpose**
- ☐ Pollutant control only
- ☐ Hydromodification control only
- ☐ Combined pollutant control and hydromodification
- ☒ Pre-treatment/forebay for another BMP
- ☐ Other (describe below)

**BMP Verification** (See BMPDM Section 8.3)

| | |
|---|---|
| Provide name and contact information for the party responsible to sign BMP verification forms | Chelisa Pack<br>Project Design Consultants<br>cpack@bowman.com<br>619-235-6471 |

**BMP Ownership and Maintenance** (See BMPDM Section 7.3 and Attachment 11)

| | | | | |
|---|---|---|---|---|
| BMP Maintenance Category | Cat. 1 ☐ | Cat. 2 ☒ | Cat. 3 ☐ | Cat. 4 ☐ |
| Final owner of BMP | ☒ HOA | ☐ Property Owner | ☐ County | ☐ Other (describe): |
| Maintenance of BMP into perpetuity | ☒ HOA | ☐ Property Owner | ☐ County | ☐ Other (describe): |

**Discussion** Upstream from biofiltration basin 2A

[2] Indicate which onsite retention or biofiltration BMP the pre-treatment/forebay serves.
[3] Hydromodification Management BMPs must be accompanied by BMPs that provide pollutant control.

| **Structural BMP ID #** | 2A-2 | **Permit # and Sheet #** | PDS2020-LDGRMJ-30295, Sheet 208 |
|---|---|---|---|

**BMP Type**

**Infiltration**
- ☐ Infiltration basin (INF-1)
- ☐ Bioretention (INF-2)
- ☐ Permeable pavement (INF-3)

**Unlined Biofiltration**
- ☐ Biofiltration with partial retention (PR-1)

**Lined Biofiltration**
- ☐ Biofiltration (BF-1)
- ☐ Nutrient Sensitive Media Design (BF-2)
- ☐ Proprietary Biofiltration (BF-3)

**Harvest and Use**
- ☐ Cistern (HU-1)

**Flow-thru Treatment** (describe below)
- ☐ With prior lawful approval to meet earlier PDP requirements
- ☒ Pre-treatment/forebay for an onsite retention or biofiltration BMP[2]
- ☐ With alternative compliance

**Hydromodification Management**[3]
- ☐ Detention pond or vault
- ☐ **Other** (describe below)

**BMP Purpose**
- ☐ Pollutant control only
- ☐ Hydromodification control only
- ☐ Combined pollutant control and hydromodification
- ☒ Pre-treatment/forebay for another BMP
- ☐ Other (describe below)

**BMP Verification** (See BMPDM Section 8.3)

| | |
|---|---|
| Provide name and contact information for the party responsible to sign BMP verification forms | Chelisa Pack<br>Project Design Consultants<br>cpack@bowman.com<br>619-235-6471 |

**BMP Ownership and Maintenance** (See BMPDM Section 7.3 and Attachment 11)

| | | | | |
|---|---|---|---|---|
| BMP Maintenance Category | Cat. 1 ☐ | Cat. 2 ☒ | Cat. 3 ☐ | Cat. 4 ☐ |
| Final owner of BMP | ☒ HOA | ☐ Property Owner | ☐ County | ☐ Other (describe): |
| Maintenance of BMP into perpetuity | ☒ HOA | ☐ Property Owner | ☐ County | ☐ Other (describe): |

**Discussion** Upstream from biofiltration basin 2A

[2] Indicate which onsite retention or biofiltration BMP the pre-treatment/forebay serves.
[3] Hydromodification Management BMPs must be accompanied by BMPs that provide pollutant control.

| **Structural BMP ID #** | 2B-1 | **Permit # and Sheet #** | PDS2020-LDGRMJ-30295, Sheet 196 |
|---|---|---|---|

**BMP Type**

**Infiltration**
- ☐ Infiltration basin (INF-1)
- ☐ Bioretention (INF-2)
- ☐ Permeable pavement (INF-3)

**Unlined Biofiltration**
- ☐ Biofiltration with partial retention (PR-1)

**Lined Biofiltration**
- ☐ Biofiltration (BF-1)
- ☐ Nutrient Sensitive Media Design (BF-2)
- ☐ Proprietary Biofiltration (BF-3)

**Harvest and Use**
- ☐ Cistern (HU-1)

**Flow-thru Treatment** (describe below)
- ☐ With prior lawful approval to meet earlier PDP requirements
- ☒ Pre-treatment/forebay for an onsite retention or biofiltration BMP[2]
- ☐ With alternative compliance

**Hydromodification Management**[3]
- ☐ Detention pond or vault
- ☐ **Other** (describe below)

**BMP Purpose**
- ☐ Pollutant control only
- ☐ Hydromodification control only
- ☐ Combined pollutant control and hydromodification
- ☒ Pre-treatment/forebay for another BMP
- ☐ Other (describe below)

**BMP Verification** (See BMPDM Section 8.3)

| | |
|---|---|
| Provide name and contact information for the party responsible to sign BMP verification forms | Chelisa Pack<br>Project Design Consultants<br>cpack@bowman.com<br>619-235-6471 |

**BMP Ownership and Maintenance** (See BMPDM Section 7.3 and Attachment 11)

| | | | | |
|---|---|---|---|---|
| BMP Maintenance Category | Cat. 1 ☐ | Cat. 2 ☒ | Cat. 3 ☐ | Cat. 4 ☐ |
| Final owner of BMP | ☒ HOA | ☐ Property Owner | ☐ County | ☐ Other (describe): |
| Maintenance of BMP into perpetuity | ☒ HOA | ☐ Property Owner | ☐ County | ☐ Other (describe): |

**Discussion** Upstream from biofiltration basin 2B

[2] Indicate which onsite retention or biofiltration BMP the pre-treatment/forebay serves.
[3] Hydromodification Management BMPs must be accompanied by BMPs that provide pollutant control.

| **Structural BMP ID #** | 2B-2 | **Permit # and Sheet #** | PDS2020-LDGRMJ-30295, Sheet 209 |
|---|---|---|---|

**BMP Type**

**Infiltration**
- ☐ Infiltration basin (INF-1)
- ☐ Bioretention (INF-2)
- ☐ Permeable pavement (INF-3)

**Unlined Biofiltration**
- ☐ Biofiltration with partial retention (PR-1)

**Lined Biofiltration**
- ☐ Biofiltration (BF-1)
- ☐ Nutrient Sensitive Media Design (BF-2)
- ☐ Proprietary Biofiltration (BF-3)

**Harvest and Use**
- ☐ Cistern (HU-1)

**Flow-thru Treatment** (describe below)
- ☐ With prior lawful approval to meet earlier PDP requirements
- ☒ Pre-treatment/forebay for an onsite retention or biofiltration BMP[2]
- ☐ With alternative compliance

**Hydromodification Management**[3]
- ☐ Detention pond or vault
- ☐ **Other** (describe below)

**BMP Purpose**
- ☐ Pollutant control only
- ☐ Hydromodification control only
- ☐ Combined pollutant control and hydromodification
- ☒ Pre-treatment/forebay for another BMP
- ☐ Other (describe below)

**BMP Verification** (See BMPDM Section 8.3)

| | |
|---|---|
| Provide name and contact information for the party responsible to sign BMP verification forms | Chelisa Pack<br>Project Design Consultants<br>cpack@bowman.com<br>619-235-6471 |

**BMP Ownership and Maintenance** (See BMPDM Section 7.3 and Attachment 11)

| | | | | |
|---|---|---|---|---|
| BMP Maintenance Category | Cat. 1 ☐ | Cat. 2 ☒ | Cat. 3 ☐ | Cat. 4 ☐ |
| Final owner of BMP | ☒ HOA | ☐ Property Owner | ☐ County | ☐ Other (describe): |
| Maintenance of BMP into perpetuity | ☒ HOA | ☐ Property Owner | ☐ County | ☐ Other (describe): |

**Discussion** Upstream from biofiltration basin 2B

[2] Indicate which onsite retention or biofiltration BMP the pre-treatment/forebay serves.
[3] Hydromodification Management BMPs must be accompanied by BMPs that provide pollutant control.

| **Structural BMP ID #** | 2C-1 | **Permit # and Sheet #** | PDS2020-LDGRMJ-30295, Sheet 209 |
|---|---|---|---|

**BMP Type**

**Infiltration**
- ☐ Infiltration basin (INF-1)
- ☐ Bioretention (INF-2)
- ☐ Permeable pavement (INF-3)

**Unlined Biofiltration**
- ☐ Biofiltration with partial retention (PR-1)

**Lined Biofiltration**
- ☐ Biofiltration (BF-1)
- ☐ Nutrient Sensitive Media Design (BF-2)
- ☐ Proprietary Biofiltration (BF-3)

**Harvest and Use**
- ☐ Cistern (HU-1)

**Flow-thru Treatment** (describe below)
- ☐ With prior lawful approval to meet earlier PDP requirements
- ☒ Pre-treatment/forebay for an onsite retention or biofiltration BMP[2]
- ☐ With alternative compliance

**Hydromodification Management**[3]
- ☐ Detention pond or vault
- ☐ **Other** (describe below)

**BMP Purpose**
- ☐ Pollutant control only
- ☐ Hydromodification control only
- ☐ Combined pollutant control and hydromodification
- ☒ Pre-treatment/forebay for another BMP
- ☐ Other (describe below)

**BMP Verification** (See BMPDM Section 8.3)

| | |
|---|---|
| Provide name and contact information for the party responsible to sign BMP verification forms | Chelisa Pack<br>Project Design Consultants<br>cpack@bowman.com<br>619-235-6471 |

**BMP Ownership and Maintenance** (See BMPDM Section 7.3 and Attachment 11)

| | | | | |
|---|---|---|---|---|
| BMP Maintenance Category | Cat. 1 ☐ | Cat. 2 ☒ | Cat. 3 ☐ | Cat. 4 ☐ |
| Final owner of BMP | ☒ HOA | ☐ Property Owner | ☐ County | ☐ Other (describe): |
| Maintenance of BMP into perpetuity | ☒ HOA | ☐ Property Owner | ☐ County | ☐ Other (describe): |

**Discussion** Upstream from biofiltration basin 2C

[2] Indicate which onsite retention or biofiltration BMP the pre-treatment/forebay serves.
[3] Hydromodification Management BMPs must be accompanied by BMPs that provide pollutant control.

| **Structural BMP ID #** | 2H-1 | **Permit # and Sheet #** | PDS2020-LDGRMJ-30295, Sheet 210 |
|---|---|---|---|

**BMP Type**

**Infiltration**
- ☐ Infiltration basin (INF-1)
- ☐ Bioretention (INF-2)
- ☐ Permeable pavement (INF-3)

**Unlined Biofiltration**
- ☐ Biofiltration with partial retention (PR-1)

**Lined Biofiltration**
- ☐ Biofiltration (BF-1)
- ☐ Nutrient Sensitive Media Design (BF-2)
- ☐ Proprietary Biofiltration (BF-3)

**Harvest and Use**
- ☐ Cistern (HU-1)

**Flow-thru Treatment** (describe below)
- ☐ With prior lawful approval to meet earlier PDP requirements
- ☒ Pre-treatment/forebay for an onsite retention or biofiltration BMP[2]
- ☐ With alternative compliance

**Hydromodification Management**[3]
- ☐ Detention pond or vault
- ☐ **Other** (describe below)

**BMP Purpose**
- ☐ Pollutant control only
- ☐ Hydromodification control only
- ☐ Combined pollutant control and hydromodification
- ☒ Pre-treatment/forebay for another BMP
- ☐ Other (describe below)

**BMP Verification** (See BMPDM Section 8.3)

| | |
|---|---|
| Provide name and contact information for the party responsible to sign BMP verification forms | Chelisa Pack<br>Project Design Consultants<br>cpack@bowman.com<br>619-235-6471 |

**BMP Ownership and Maintenance** (See BMPDM Section 7.3 and Attachment 11)

| | | | | |
|---|---|---|---|---|
| BMP Maintenance Category | Cat. 1<br>☐ | Cat. 2<br>☐ | Cat. 3<br>☐ | Cat. 4<br>☒ |
| Final owner of BMP | ☐ HOA | ☐ Property Owner | ☒ County | ☐ Other (describe): |
| Maintenance of BMP into perpetuity | ☐ HOA | ☐ Property Owner | ☒ County | ☐ Other (describe): |

**Discussion** Upstream from biofiltration basin 2H

Proposed for County Field Ops maintenance.

[2] Indicate which onsite retention or biofiltration BMP the pre-treatment/forebay serves.
[3] Hydromodification Management BMPs must be accompanied by BMPs that provide pollutant control.

| **Structural BMP ID #** | 3C-1 | **Permit # and Sheet #** | PDS2020-LDGRMJ-30295, Sheet 202 |
|---|---|---|---|

**BMP Type**

**Infiltration**
- ☐ Infiltration basin (INF-1)
- ☐ Bioretention (INF-2)
- ☐ Permeable pavement (INF-3)

**Unlined Biofiltration**
- ☐ Biofiltration with partial retention (PR-1)

**Lined Biofiltration**
- ☐ Biofiltration (BF-1)
- ☐ Nutrient Sensitive Media Design (BF-2)
- ☐ Proprietary Biofiltration (BF-3)

**Harvest and Use**
- ☐ Cistern (HU-1)

**Flow-thru Treatment** (describe below)
- ☐ With prior lawful approval to meet earlier PDP requirements
- ☒ Pre-treatment/forebay for an onsite retention or biofiltration BMP[2]
- ☐ With alternative compliance

**Hydromodification Management**[3]
- ☐ Detention pond or vault
- ☐ **Other** (describe below)

**BMP Purpose**
- ☐ Pollutant control only
- ☐ Hydromodification control only
- ☐ Combined pollutant control and hydromodification
- ☒ Pre-treatment/forebay for another BMP
- ☐ Other (describe below)

**BMP Verification** (See BMPDM Section 8.3)

| | |
|---|---|
| Provide name and contact information for the party responsible to sign BMP verification forms | Chelisa Pack<br>Project Design Consultants<br>cpack@bowman.com<br>619-235-6471 |

**BMP Ownership and Maintenance** (See BMPDM Section 7.3 and Attachment 11)

| | | | | |
|---|---|---|---|---|
| BMP Maintenance Category | Cat. 1 ☐ | Cat. 2 ☒ | Cat. 3 ☐ | Cat. 4 ☐ |
| Final owner of BMP | ☒ HOA | ☐ Property Owner | ☐ County | ☐ Other (describe): |
| Maintenance of BMP into perpetuity | ☒ HOA | ☐ Property Owner | ☐ County | ☐ Other (describe): |

**Discussion** Upstream from biofiltration basin 3C

[2] Indicate which onsite retention or biofiltration BMP the pre-treatment/forebay serves.
[3] Hydromodification Management BMPs must be accompanied by BMPs that provide pollutant control.

| **Structural BMP ID #** | 3D-1 | **Permit # and Sheet #** | PDS2020-LDGRMJ-30295, Sheet 210 |
|---|---|---|---|

**BMP Type**

**Infiltration**
- ☐ Infiltration basin (INF-1)
- ☐ Bioretention (INF-2)
- ☐ Permeable pavement (INF-3)

**Unlined Biofiltration**
- ☐ Biofiltration with partial retention (PR-1)

**Lined Biofiltration**
- ☐ Biofiltration (BF-1)
- ☐ Nutrient Sensitive Media Design (BF-2)
- ☐ Proprietary Biofiltration (BF-3)

**Harvest and Use**
- ☐ Cistern (HU-1)

**Flow-thru Treatment** (describe below)
- ☐ With prior lawful approval to meet earlier PDP requirements
- ☒ Pre-treatment/forebay for an onsite retention or biofiltration BMP[2]
- ☐ With alternative compliance

**Hydromodification Management**[3]
- ☐ Detention pond or vault
- ☐ **Other** (describe below)

**BMP Purpose**
- ☐ Pollutant control only
- ☐ Hydromodification control only
- ☐ Combined pollutant control and hydromodification
- ☒ Pre-treatment/forebay for another BMP
- ☐ Other (describe below)

**BMP Verification** (See BMPDM Section 8.3)

| | |
|---|---|
| Provide name and contact information for the party responsible to sign BMP verification forms | Chelisa Pack<br>Project Design Consultants<br>cpack@bowman.com<br>619-235-6471 |

**BMP Ownership and Maintenance** (See BMPDM Section 7.3 and Attachment 11)

| | | | | |
|---|---|---|---|---|
| BMP Maintenance Category | Cat. 1<br>☐ | Cat. 2<br>☒ | Cat. 3<br>☐ | Cat. 4<br>☐ |
| Final owner of BMP | ☒ HOA | ☐ Property Owner | ☐ County | ☐ Other (describe): |
| Maintenance of BMP into perpetuity | ☒ HOA | ☐ Property Owner | ☐ County | ☐ Other (describe): |

**Discussion** Upstream from biofiltration basin 3D

[2] Indicate which onsite retention or biofiltration BMP the pre-treatment/forebay serves.
[3] Hydromodification Management BMPs must be accompanied by BMPs that provide pollutant control.

# GEOCON INC. STORM WATER MANAGEMENT INVESTIGATION (DATED MAY 24, 2024) FOR INFILTRATION

Project No. G3198-52-01
May 24, 2024

Trumark Homes LLC
3001 Bishop Drive, #100
San Marcos, California, 94583

Attention: Mr. Joe Martin

Subject: STORM WATER MANAGEMENT INVESTIGATION
OCEAN BREEZE RANCH
BONSALL, CALIFORNIA

References:
1. *Geotechnical Investigation, Ocean Breeze Ranch, Bonsall, California,* prepared by Geocon Incorporated, *dated May 24, 2024* (Project No. G3198-52-01).
2. *Site Specific Storm Water Infiltration Rate Evaluation, Ocean Breeze Ranch, Bonsall, San Diego County, California*, prepared by Geosoils, Inc., dated February 15, 2021 (Project No. W.O. 6960-A12-SC).

Dear Mr. Martin:

In accordance with your request and authorization of our Proposal No. LG-23438 dated September 18, 2023 and subsequent change orders, we herein submit the results of our storm water management investigation for Ocean Breeze Ranch in the City of Bonsall, California (see Vicinity Map).




**Vicinity Map**

# SITE AND PROJECT DESCRIPTION

The Ocean Breeze Ranch property comprises approximately 1,402 acres of open space, horse pastures and ranch structures including six residences as well as various barns and stables. The site is located along the southern portion of the San Luis Rey River Valley and extends into the rugged terrain between the river valley and West Lilac Road. The site is located within the community of Bonsall within the County of San Diego, California generally north of West Lilac Road, south and east of the San Luis Rey River and Highway 76 and west of Interstate 15.

The site is accessed from the south by Vessels Ranch Road off of West Lilac Road. Vessels Ranch Road turns into Dulin Ranch Road as the road continues east into the site and consists of an asphalt paved roadway to access the residences at the site. Several primitive dirt roads were constructed to access additional areas of the site while Dulin Road extends as a dirt road to the east, terminating at the Rancho Monserate community. Existing grades range from relatively flat pasture areas to moderately to steeply sloping terrain with elevations ranging from approximately 180 to 440 feet Mean Sea Level (MSL) across the site. The Existing Site Plan shows the current site conditions.

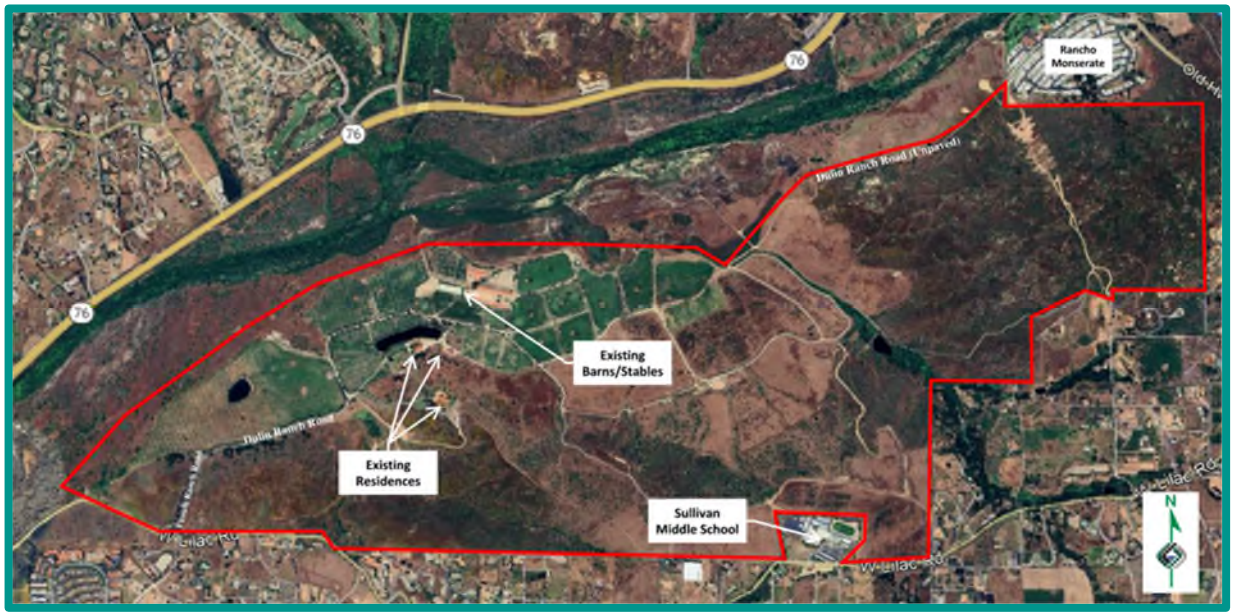


**Existing Site Plan**

We understand the project will consist of the construction of three planning areas (288 acres), a hillside estate (24 acres) and additional parcel area (30 acres) along with leaving a portion of the existing equestrian facility intact (203 acres). The total project area is approximately 545 acres. Planning Areas

1 (PA-1A and 1B) and 2 (PA-2A and 2B) will consist of 381 single-family residences along with accommodating roadways, utilities, basins and landscaping. Planning Area 3 (PA-3) will consist of 14, 5-acre estate lots and a 24-acre hillside estate lot. Dulin Road will be improved as a private roadway to access PA-3 and connect to the existing Dulin Road at the Rancho Monserate property. Storm water BMPs are planned for each planning area. The Planning Area 3 lots will incorporate septic and leech field system and will not be tied into the local sewage system.

Maximum cut and fills of about 70 and 54 feet, respectively, are proposed within PA-1A and PA-1B with maximum slope heights of approximately 95 feet (cut) and 50 feet (fill). Within PA-2A and PA-2B, fill thickness range between 10 and 40 feet with fill slopes up to 50 feet in height. PA-3 has maximum cut and fill slopes heights of 30 and 5 feet, respectively with cuts and fills of 10 and 5 feet, respectively. Slopes will be graded to inclinations of 2:1 (horizontal to vertical) of flatter.

The locations, site descriptions, and proposed development are based on our site reconnaissance, review of published geologic literature, field investigations, and discussions with project personnel. If development plans differ from those described herein, Geocon Incorporated should be contacted for review of the plans and possible revisions to this report.

## STORM WATER MANAGEMENT INVESTIGATION

We understand storm water management devices are being proposed in accordance with the *2020 County of San Diego BMP Design Manual*. If not properly constructed, there is a potential for distress to improvements and properties located hydrologically down gradient or adjacent to these devices. Factors such as the amount of water to be detained, its residence time, and soil permeability have an important effect on seepage transmission and the potential adverse impacts that may occur if the storm water management features are not properly designed and constructed. GeoSoils (2021) performed hydrogeological studies at the site which consisted of infiltration testing and associated groundwater borings within a total of 19 proposed basins. Groundwater exists at depths ranging between about 10 and 14 feet below existing grades within the alluvium underlying Planning Area 2 and within the flood plain area north of Planning Area 1. These groundwater depths generally correspond to approximate elevations ranging between 174 to 189 feet MSL. In a previous study, groundwater was encountered within Planning Area 1 at 21 feet below existing grade at an approximate elevation of 204 feet MSL. If infiltration of storm water runoff occurs, downstream properties may be subjected to seeps, springs, slope instability, raised groundwater, movement of foundations and slabs, or other undesirable impacts because of water infiltration.

## Hydrologic Soil Group

The United States Department of Agriculture (USDA), Natural Resources Conservation Services, possesses general information regarding the existing soil conditions for areas within the United States. The USDA website also provides the Hydrologic Soil Group. The following table presents the descriptions of the hydrologic soil groups. If a soil is assigned to a dual hydrologic group (A/D, B/D, or C/D), the first letter is for drained areas and the second is for undrained areas. In addition, the USDA website also provides an estimated saturated hydraulic conductivity for the existing soil.

**HYDROLOGIC SOIL GROUP DEFINITIONS**

| Soil Group | Soil Group Definition |
|---|---|
| A | Soils having a high infiltration rate (low runoff potential) when thoroughly wet. These consist mainly of deep, well drained to excessively drained sands or gravelly sands. These soils have a high rate of water transmission. |
| B | Soils having a moderate infiltration rate when thoroughly wet. These consist chiefly of moderately deep or deep, moderately well drained or well drained soils that have moderately fine texture to moderately coarse texture. These soils have a moderate rate of water transmission. |
| C | Soils having a slow infiltration rate when thoroughly wet. These consist chiefly of soils having a layer that impedes the downward movement of water or soils of moderately fine texture or fine texture. These soils have a slow rate of water transmission. |
| D | Soils having a very slow infiltration rate (high runoff potential) when thoroughly wet. These consist chiefly of clays that have a high shrink-swell potential, soils that have a high-water table, soils that have a claypan or clay layer at or near the surface, and soils that are shallow over nearly impervious material. These soils have a very slow rate of water transmission. |

The property is underlain by undocumented fill, topsoil/colluvium, alluvium, Older Alluvium, granitic rock (Kcc, Ki), and meta-volcanic/meta-sedimentary rock (Kjm). The soil group varies across the subject site. The following table presents the information from the USDA website for the subject property. The Hydrologic Soil Group Map presents output from the USDA website showing the limits of the soil units.

**USDA WEB SOIL SURVEY – HYDROLOGIC SOIL GROUP**

| Map Unit Name | Map Unit Symbol | Approximate Percentage of Property | Hydrologic Soil Group | $k_{SAT}$ of Most Limiting Layer (inches/hour) |
|---|---|---|---|---|
| Cieneba-Rock outcrop complex, 30 to 75 percent slopes, very stony | CmrG | 19 | D | 3.43 |
| Tujunga sand, 0 to 5 percent slopes | TuB | 12 | A | 13.04 |
| Cieneba coarse sandy loam, 30 to 65 percent slopes, eroded | ClG2 | 10 | D | 3.97 |
| Vista coarse sandy loam, 15 to 30 percent slopes, MLRA 20 | VsE | 9 | B | 3.97 |

| Map Unit Name | Map Unit Symbol | Approximate Percentage of Property | Hydrologic Soil Group | $k_{SAT}$ of Most Limiting Layer (inches/hour) |
|---|---|---|---|---|
| Fallbrook sandy loam, 15 to 30 percent slopes, eroded | FaE2 | 7 | C | 3.97 |
| Placentia sandy loam, 2 to 9 percent slopes, warm MAAT, MLRA 19 | PeC | 7 | C | 1.28 |
| Visalia sandy loam, 0 to 2 percent slopes | VaA | 6 | A | 3.97 |
| Fallbrook-Vista sandy loams, 15 to 30 percent slopes | FvE | 3 | C | 3.97 |
| Steep gullied land | StG | 3 | - | - |
| Riverwash | Rm | 3 | - | - |
| Vista coarse sandy loam, 30 to 65 percent slopes, MLRA 20 | VsG | 3 | B | 3.97 |
| Cieneba rocky coarse sandy loam, 9 to 30 percent slopes, eroded | CmE2 | 2 | D | 3.97 |
| Fallbrook sandy loam, 5 to 9 percent slopes | FaC | 2 | C | 3.97 |
| Fallbrook-Vista sandy loams, 9 to 15 percent slopes | FvD | 2 | C | 3.97 |
| Ramona sandy loam, 9 to 15 percent slopes, eroded | RaD2 | 2 | C | 1.28 |
| Bonsall sandy loam, 2 to 9 percent slopes | BlC | 2 | D | 3.97 |
| Fallbrook sandy loam, 9 to 15 percent slopes, eroded | FaD2 | 1 | C | 3.97 |
| Placentia sandy loam, 0 to 2 percent slopes, warm MAAT, MLRA 19 | PeA | 1 | C | 1.28 |
| Vista coarse sandy loam, 15 to 30 percent slopes, eroded | VsE2 | 1 | B | 3.97 |
| Ramona sandy loam, 5 to 9 percent slopes | RaC | 1 | C | 1.28 |
| Grangeville fine sandy loam, 0 to 2 percent slopes | GoA | 1 | B | 3.97 |
| Visalia sandy loam, 2 to 5 percent slopes | VaB | 1 | A | 3.97 |
| Bonsall sandy loam, 9 to 15 percent slopes, eroded | BlD2 | 1 | D | 3.97 |
| Fallbrook sandy loam, 9 to 30 percent slopes, severely eroded | FaE3 | 1 | C | 3.97 |
| Placentia sandy loam, 9 to 15 percent slopes, eroded | PeD2 | 0.5 | D | 1.28 |
| Vista coarse sandy loam, 9 to 15 percent slopes, MLRA 20 | VsD | 0.5 | B | 3.97 |
| Cieneba coarse sandy loam, 5 to 15 percent slopes, eroded | ClD2 | 0.5 | D | 3.97 |
| Ramona gravelly sandy loam, 9 to 15 percent slopes | RcD | 0.5 | C | 1.28 |

## In-Situ Testing

GeoSoils (2021) evaluated a total of 19 basins within the subject property. Within each basin, two infiltration test borings were advanced to about 5 feet below existing grade and/or the infiltration surface, and at the location of the proposed treatment system, where percolation/infiltration tests

were performed. In addition, a groundwater confirmation boring was excavated for each basin location. The locations of the percolation/infiltration tests are shown on the Infiltration Test Location Map, Figures 1a through 1d. The field percolation rates were converted to an infiltration rate using the Porchet Method. The results of the tests provide parameters regarding the saturated hydraulic conductivity and infiltration characteristics of on-site soil and geologic units. The following table represents the results of the estimated field saturated hydraulic conductivity and estimated infiltration rates obtained from the percolation/infiltration tests. The field sheets from the referenced report are also attached herein. Based on the *2020 County of San Diego BMP Design Manual*, the infiltration rate should be considered equal to the saturated hydraulic conductivity rate. The referenced report applied a feasibility factor of safety of 2.0 to the estimated infiltration rates to provide input on Table D.1-1 which are included herein. Soil infiltration rates from in-situ tests can vary significantly from one location to another due to the heterogeneous characteristics inherent to most soil.

**FIELD INFILTRATION TEST RESULTS**

| BMP ID | Infiltration Borings | Associated Groundwater Boring | Infiltration Category | Average Test Elevation (Feet MSL) | Geologic Unit | Average Field-Saturated Infiltration Rate, $k_{sat}$ (Inch/Hour) | Design Infiltration Rate[1], $k_{sat}$ (Inch/Hour) |
|---|---|---|---|---|---|---|---|
| 1A | IB-103, IB-104 | GW-13 | RESTRICTED | 227 | Older Alluvium/ Granitics | 0.183 | 0.091 |
| 1B | N/A | N/A | RESTRICTED | - | - | - | 0.025 (default of HSG = D) |
| 2A | IB-127, IB-128 | GW-25 | RESTRICTED | 187 | Alluvium | 6.326 | 3.163 |
| 2B | IB-106, IB-107 | GW-14 | RESTRICTED | 295 | Alluvium | 7.368 | 3.684 |
| 2C | IB-129, IB-130 | GW-26 | RESTRICTED | 192 | Alluvium | 1.340 | 0.670 |
| 2D/ 2I[3] | IB-131, IB-132 | GW-27 | RESTRICTED[2] | 195 | Alluvium | 3.888 | 1.944 |
| 2E | IB-133, IB-134 | GW-28 | RESTRICTED[2] | 198 | Alluvium | 4.783 | 2.392 |
| 2F | IB-135, IB-136 | GW-29 | RESTRICTED[2] | 198 | Alluvium | 3.314 | 1.657 |
| 2G | IB-137, IB-138 | GW-30 | RESTRICTED[2] | 198 | Alluvium | 1.812 | 0.906 |
| 2H | B-101, B-102 | GW-12 | RESTRICTED[2] | 190 | Granitics | 0.138 | 0.069 |

| BMP ID | Infiltration Borings | Associated Groundwater Boring | Infiltration Category | Average Test Elevation (Feet MSL) | Geologic Unit | Average Field-Saturated Infiltration Rate, $k_{sat}$ (Inch/Hour) | Design Infiltration Rate[1], $k_{sat}$ (Inch/Hour) |
|---|---|---|---|---|---|---|---|
| 3A | IB-107, IB-108 | GW-15 | RESTRICTED | 252 | Older Alluvium | 0.080 | Use Default HSG = C of 1.00 |
| 3B | IB-111, IB-112 | GW-17 | RESTRICTED | 241 | Granitics | 0.070 | 0.035 |
| 3C | IB-113, IB-114 | GW-18 | UNRESTRICTED | 240 | Colluvium | 1.340 | w/ FOS = 2.63 use 0.510 |
| 3D | IB-115, IB-116 | GW-19 | RESTRICTED | 222 | Older Alluvium | 0.081 | 0.040 |
| 3E | IB-117, IB-118 | GW-20 | RESTRICTED | 232 | Older Alluvium | 0.024 | Use Default HSG = C of 0.100 |
| 3F | IB-119, IB-120 | GW-21 | RESTRICTED[2] | 222 | Alluvium | 17.714 | 8.857 |
| 3G | IB-121, IB-122 | GW-22 | RESTRICTED[2] | 231 | Alluvium | 8.056 | 4.028 |
| 3H | IB-125, IB-126 | GW-24 | RESTRICTED[2] | 613 | Granitics | 0.439 | 0.219 |
| 3I | IB-123, IB-124 | GW-23 | RESTRICTED[2] | 672 | Granitics | 0.447 | 0.223 |
| 3J/3K[3] | IB-109, IB-110 | GW-16 | RESTRICTED[2] | 238 | Colluvium | 0.135 | 0.067 |
| | | | | | **Average:** | **3.028** | **1.753** |

[1] Using a factor of safety of 2; [2] Restricted Due to Geologic Conditions; [3]Similar Conclusions Due to Proximity

Infiltration categories include full infiltration, partial infiltration, and no infiltration. The following table presents the commonly accepted definitions of the potential infiltration categories based on the infiltration rates.

**INFILTRATION CATEGORIES**

| Infiltration Category | Field Infiltration Rate, I (inches/hour) | Factored Infiltration Rate[1], I (inches/hour) |
|---|---|---|
| Full Infiltration | I > 1.0 | I > 0.5 |
| Partial Infiltration | 0.10 < I ≤ 1.0 | 0.05 < I ≤ 0.5 |
| No Infiltration (Infeasible) | I < 0.10 | I < 0.05 |

[1] Using a Factor of Safety of 2.

# GEOLOGIC HAZARDS AND CONSIDERATIONS

## Groundwater Elevations

GeoSoils (2021) encountered the regional groundwater table during their investigation at depths of about 10 to 14 feet below existing grades within Planning Area 2. In addition, a 2016 Geosoils study encountered groundwater within Planning Area 1 at approximately 21 feet below existing grade. Groundwater was not encountered in other areas of the subject site; however, it is not uncommon for shallow seepage conditions to develop where none previously existed when sites are irrigated or infiltration is implemented. Groundwater and seepage are dependent on seasonal precipitation, irrigation, land use, among other factors, and varies as a result. Proper surface drainage will be important to future performance of the project. We opine that groundwater may be encountered during construction of the proposed development within Planning Area 2 and at lower elevations within Planning Area 1.

## New or Existing Utilities

Existing utilities are located within the site boundaries and new utilities will be constructed within the site boundaries. Full or partial infiltration should not be allowed in the areas of the utilities to help prevent potential damage/distress to improvements. Mitigation measures to prevent water from infiltrating the utilities consist of setbacks, installing cutoff walls around the utilities and installing subdrains and/or installing liners. The horizontal and vertical setbacks for infiltration devices should be a minimum of 10 feet and a 1:1 plane of 1 foot below the closest edge of the deepest adjacent utility, respectively.

## Existing and Planned Structures

Existing residential structures and barns/stables exist onsite and residential and commercial structures, and roadway structures exist adjacent to the site. Some of these structures will be

demolished during construction of the development. Water should not be allowed to infiltrate in areas where it could affect the neighboring properties and existing adjacent structures, improvements, roadways and structures that will remain. Mitigation for existing structures consists of not allowing water infiltration within a lateral distance of at least 10 feet from the new or existing foundations and property lines.

### Existing and Proposed Geologic Conditions

Based on the existing grades at the site, portions of the site are within the 100-year flood plain. Proposed grading will raise grades out of the 100-year flood plain for the proposed structures and improvements. Other portions of the site are situated topographically higher than adjacent proposed and existing developments. The bottoms of the proposed basins vary and will most likely be founded in alluvial, colluvial, and weathered to marginally weathered granitic rock. Due to restrictions outlined in Appendix A – *Infiltration Test Results*, full and partial infiltration should be considered infeasible for all proposed basins with the exception of Basin 3C. Basin 3C is considered to possess a "Full Infiltration" condition due to the lack of restrictions outlined in Appendix A – *Infiltration Test Results*.

### Soil or Groundwater Contamination

We are unaware of contaminated soil on the property. Therefore, infiltration associated with this risk is considered feasible.

## CONCLUSIONS AND RECOMMENDATIONS

### Storm Water Evaluation Narrative

GeoSoils (2021) performed 38 percolation/infiltration tests within the proposed basin areas during their storm water investigation. Results from the tests vary across the site and range from full, partial, and no infiltration. However, based on findings and results from the referenced report (Exhibit A – *Infiltration Test Results*), we do not recommend infiltration to be allowed in any basin within the proposed development with the exception of Basin 3C.

### Storm Water Infiltration Conclusion

Based on Exhibit A – *Infiltration Test Results*, full and partial infiltration on the property is not feasible, with the exception of Basin 3C. Basin 3C possesses a "Full Infiltration" condition due to absence of risks identified herein. Therefore, the remaining basins possess a "No Infiltration" condition.

## Storm Water Infiltration Recommendations

Liners and subdrains should be incorporated into the design and construction of the planned storm water devices. The proposed basins should be fully lined on the sides and bottom to prevent migration of water. The liners should be impermeable (e.g., High-density polyethylene, HDPE, with a thickness of about 30 mil or equivalent Polyvinyl Chloride**,** PVC) to prevent water migration. Proposed basins developed on slopes should have liners specifically designed for sloping conditions to help prevent any fill movement. A minimum 18 inches of fill should be placed on the liners. The subdrains should be perforated within the liner area, installed at the base, be at least 3 inches in diameter and consist of Schedule 40 PVC pipe. The subdrains outside of the liner should consist of solid pipe. The penetration of the liners at the subdrains should be properly waterproofed. The subdrains should be connected to a proper outlet. The devices should also be installed in accordance with the manufacturer's recommendations.

## Storm Water Standard Worksheets

The BMP Manual requests the geotechnical engineer complete the *Approved Infiltration Rate Assessment Methods* (Table D.2-3) table information to help evaluate the potential for infiltration on the property. The attached Table D.2-3 presented in Exhibit A presents the completed information for the submittal process.

The regional storm water standards also have a table (Table D.2-4) that helps the project civil engineer estimate the factor of safety based on several factors. Table D.2-3 presented in Exhibit A describes the suitability assessment input parameters related to the geotechnical engineering aspects for the factor of safety determination.

Based on the geotechnical investigation from the referenced report, Table D.2-3 presented in Exhibit A herein only presents the suitability assessment safety factor (Part A) of the table. The project civil engineer should evaluate the safety factor for design (Part B) and use the combined safety factor for the design infiltration rate.

If you have any questions regarding this correspondence, or if we may be of further service, please contact the undersigned at your convenience.

Very truly yours,

GEOCON INCORPORATED

Kenneth W. Haase
CEG 2775

William C. Buckley, GIT
Senior Staff Geologist

Shawn Foy Weedon
GE 2714

PROFESSIONAL GEOLOGIST
KENNETH W. HAASE
No. 2775
CERTIFIED ENGINEERING GEOLOGIST
STATE OF CALIFORNIA

REGISTERED PROFESSIONAL ENGINEER
SHAWN WEEDON
No. 2714
GEOTECHNICAL
STATE OF CALIFORNIA

KWH:WCB:SFW:am

Attachments: Stormwater Map, Figures 1a through 1d
Hydrologic Soil Group Map
Appendix A – Infiltration Test Results

(e-mail) Addressee

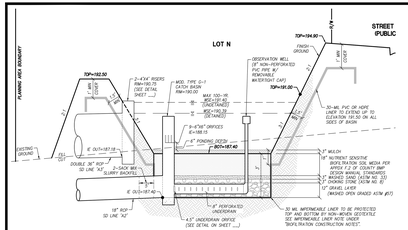


SECTION 2A-2A- BMP 2A
LINED BIOFILTRATION (PRIVATE)
NOT TO SCALE

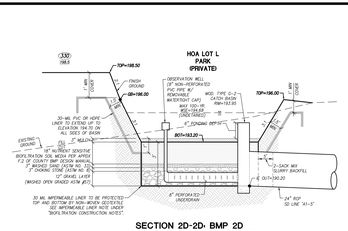


SECTION 2D-2D- BMP 2D
LINED BIOFILTRATION (PRIVATE)
NOT TO SCALE

| BMP SUMMARY TABLE | | | | | | |
|---|---|---|---|---|---|---|
| DMA ID | DMA TYPE | DMA SIZE (AC.) | BMP ID | BMP FOOTPRINT (SF.) | BMP TYPE | MAINTENANCE CATEGORY |
| 2 | DMA NOT TO BMP | 19.37 | BASIN 2A | 16,820 | LINED BIOFILTRATION (SP-1) | 2 |
| 2A-1 | DMA NOT TO BMP | 11.21 | 2A-1 | N/A | PRE-TREATMENT | 2 |
| 2A-2 | DMA NOT TO BMP | 6.82 | 2A-2 | N/A | PRE-TREATMENT | 2 |
| 3 | DMA NOT TO BMP | 18.54 | BASIN 2B | 14,551 | LINED BIOFILTRATION (SP-1) | 2 |
| 2B-1 | DMA NOT TO BMP | 11.70 | 2B-1 | N/A | PRE-TREATMENT | 2 |
| 4A,B | DMA NOT TO BMP | 5.80 | BASIN 2C | 5,197 | LINED BIOFILTRATION (SP-1) | 2 |
| 2C-1 | DMA NOT TO BMP | 5.63 | 2C-1 | N/A | PRE-TREATMENT | 2 |
| 5 | DMA NOT TO BMP | 4.13 | BASIN 2D | 2,280 | LINED BIOFILTRATION (SP-1) | 2 |
| 18 | DMA NOT TO BMP | 8.38 | BASIN 2H | 9160 | LINED BIOFILTRATION (SP-1) | 4 |
| 2H-1 | DMA NOT TO BMP | 7.88 | 2H-1 | N/A | PRE-TREATMENT | 4 |
| 16 | DMA NOT TO BMP | 5.28 | BASIN 2I | 2,024 | LINED BIOFILTRATION (SP-1) | 2 |
| 8 | DMA NOT TO BMP | 5.66 | BASIN 2E | 2,344 | LINED BIOFILTRATION (SP-1) | 2 |
| 6 | DMA NOT TO BMP | 2.91 | BASIN 2F | 2,435 | LINED BIOFILTRATION (SP-1) | 2 |
| 7 | DMA NOT TO BMP | 5.70 | BASIN 2F | 2,743 | LINED BIOFILTRATION (SP-1) | 2 |

NOTE: MOST HILLSIDE DRAINAGE TO BE BYPASSED AWAY FROM POLLUTANT CONTROL BMPS. MOST HILLSIDE AREAS ARE CONSIDERED SELF-MITIGATING AND MOST AREAS WILL NOT CONTRIBUTE WITH ONSITE RUNOFF FOR POLLUTANT TREATMENT.

*SELF-MITIGATING AREAS PER THIS SHEET ARE AS FOLLOWS: 2D-2G, 3A-4B & 8B-7D

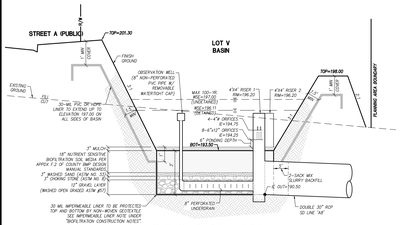


SECTION 2B-2B- BMP 2B
LINED BIOFILTRATION (PRIVATE)
NOT TO SCALE

LEGEND:
- DRAINAGE MANAGEMENT AREA
- DMA BOUNDARY PRE-TREATMENT
- DRAINAGE SUBAREA ACREAGE
- SELF-MITIGATING AREA
- SELF-RETAINING AREA
- ACP TRIBUTARY AREA
- BMP BASIN BOTTOM SURFACE WATCH
- PROPOSED BYPASS AREA (INTERCEPTED BY PROPOSED BMP
- DISPERSION AREA
- PLANNING AREA BOUNDARY
- LOT LINE
- WATERS OF THE US AND/OR STATE
- EXISTING FLOODPLAIN
- PROPOSED FLOODPLAIN
- EXISTING MAJOR CONTOUR
- EXISTING MINOR CONTOUR
- PROPOSED MAJOR CONTOUR
- PROPOSED MINOR CONTOUR
- PROPOSED STORM DRAIN
- 100'-1.49"TO 50.00'-37% BUFFER ZONE
- 50'-0" BUFFER ZONE
- BIOLOGICAL SENSITIVE HABITATS
- SOIL TYPE A
- SOIL TYPE B
- SOIL TYPE C (NO HATCH)
- SOIL TYPE D

HYDROLOGIC SOIL GROUP TYPES A, A- B, C, & D.
DEPTH TO GROUNDWATER VARIES, SEE GEOTECH REPORT.
-PRESERVATION OF NATURAL AREAS
-PROPOSED STORAGE AREAS AND TRASH CANS WITH LIDS
-INLET STENCILING
-DISCHARGE FROM THE 19' AIR CONDITIONING CONDENSATE AND FIRE TEST SPRINKLER DISCHARGES

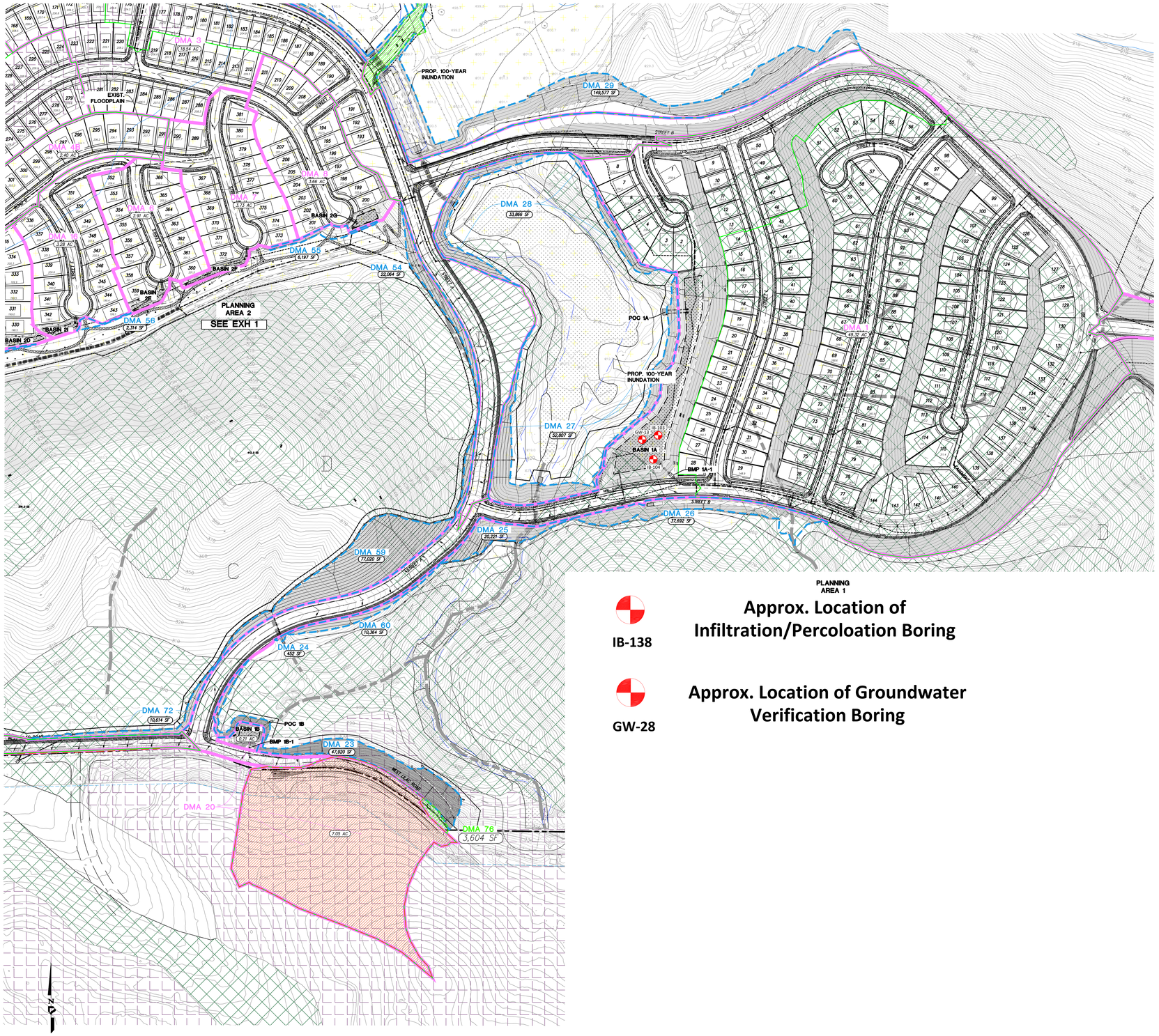


**BMP SUMMARY TABLE**

| DMA ID | DMA TYPE | DMA SIZE (AC.) | BMP ID | BMP FOOTPRINT (SF) | BMP TYPE | MAINTENANCE CATEGORY |
|---|---|---|---|---|---|---|
| 1 | DRAINS TO BMP | 49.32 | BASIN 1A | 45,538 | LINED BIOFILTRATION (BF-1) | 2 |
| 1A-1 | DRAINS TO BMP | 35.70 | 1A-1 | N/A | PRE-TREATMENT | 2 |
| 20 | DRAINS TO BMP | 7.26 | BASIN 1B | 2,615 | LINED BIOFILTRATION (BF-1) | 2 |
| 1B-1 | DRAINS TO BMP | 7.05 | 1B-1 | N/A | PRE-TREATMENT | 2 |

NOTE: MOST HILLSIDE DRAINAGE TO BE BYPASSED AWAY FROM POLLUTANT CONTROL BMPS. MOST HILLSIDE AREAS ARE CONSIDERED SELF-MITIGATING* AND MOST AREAS WILL NOT COMMINGLE WITH ONSITE RUNOFF FOR POLLUTANT TREATMENT.

*SELF-MITIGATING AREAS PER THIS SHEET ARE AS FOLLOWS: 23-26, 54-56, 59-60 & 72

**LEGEND:**

- DRAINAGE MANAGEMENT AREA
- DMA BOUNDARY PRE-TREATMENT
- XX.XX AC — DRAINAGE SUBAREA ACREAGE
- SELF-MITIGATING AREA
- SELF-RETAINING AREA
- ACP TRIBUTARY AREA
- BMP BASIN BOTTOM SURFACE HATCH
- PROPOSED BYPASS AREA UNTREATED BY PROPOSED BMP
- DISPERSION AREA
- PLANNING AREA BOUNDARY
- LOT LINE
- WATERS OF THE US AND/OR STATE
- EXISTING FLOODPLAIN
- PROPOSED FLOODPLAIN
- EXISTING MAJOR CONTOUR
- EXISTING MINOR CONTOUR
- PROPOSED MAJOR CONTOUR
- PROPOSED MINOR CONTOUR
- PROPOSED STORM DRAIN
- 100' LIMITED BLDG ZONE BUFFER / 100' BIO BUFFER ZONE — BIOLOGICAL SENSITIVE HABITATS
- SOIL TYPE A
- SOIL TYPE B
- SOIL TYPE C (NO HATCH)
- SOIL TYPE D

HYDROLOGIC SOIL GROUP TYPES: A, B, C, & D
DEPTH TO GROUNDWATER VARIES, SEE GEOTECH REPORT.
BASELINE BMPs INCLUDE:
–PRESERVATION OF NATURAL AREAS
–TRASH STORAGE AREAS AND TRASH CANS WITH LIDS
–INLET STENCILING
–MANAGEMENT OF AIR CONDITIONING CONDENSATE AND FIRE TEST SPRINKLER DISCHARGES

**IB-138** — **Approx. Location of Infiltration/Percoloation Boring**

**GW-28** — **Approx. Location of Groundwater Verification Boring**

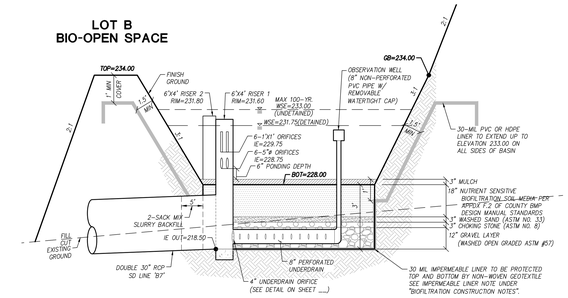


**SECTION 1A-1A, BMP 1A**
**LINED BIOFILTRATION (PRIVATE)**
NOT TO SCALE

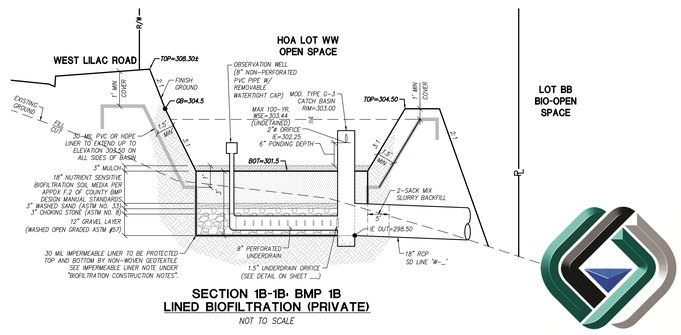


**SECTION 1B-1B, BMP 1B**
**LINED BIOFILTRATION (PRIVATE)**
NOT TO SCALE

**Infiltration Test Location Map**

Figure 1b

Geocon Project No. G3198-52-01

| | | |
|---|---|---|
| SCALE: 1"=100' | PREPARED BY: PROJECT DESIGN CONSULTANTS Planning \| Landscape Architecture \| Engineering \| Survey — 701 B Street, Suite 800 San Diego, CA 92101 619.235.6471 Tel 619.234.0349 Fax | COUNTY OF SAN DIEGO |
| JOB #: 4192.10 | | OCEAN BREEZE RANCH |
| CREATED: 08/07/20 | | DRAINAGE MANAGEMENT AREA AND BMP EXHIBIT EXHIBIT 2 OF 5 |

File Name Q:\CA-SAND-FD\Projects\4192.10\Engr\Reports\SWQMP-FE\ATTACHMENTS\A2- DMA EXHIBITS & CONST. PLAN SHEETS\DMA EXH.dwg, Date Plotted Last 4/30/2024 3:50:40 PM

**LEGEND:**

- DRAINAGE MANAGEMENT AREA
- DMA BOUNDARY PRE-TREATMENT
- XX.XX AC — DRAINAGE SUBAREA ACREAGE
- SELF-MITIGATING AREA
- SELF-RETAINING AREA
- ACP TRIBUTARY AREA
- BMP BASIN BOTTOM SURFACE HATCH
- PROPOSED BYPASS AREA UNTREATED BY PROPOSED BMP
- DISPERSION AREA
- PLANNING AREA BOUNDARY
- LOT LINE
- WATERS OF THE US AND/OR STATE
- EXISTING FLOODPLAIN
- PROPOSED FLOODPLAIN
- EXISTING MAJOR CONTOUR
- EXISTING MINOR CONTOUR
- PROPOSED MAJOR CONTOUR
- PROPOSED MINOR CONTOUR
- PROPOSED STORM DRAIN
- 100' LIMITED BLDG ZONE BUFFER / 100' BIO BUFFER ZONE — BIOLOGICAL SENSITIVE HABITATS
- SOIL TYPE A
- SOIL TYPE B
- SOIL TYPE C (NO HATCH)
- SOIL TYPE D

HYDROLOGIC SOIL GROUP TYPES: A, B, C, & D
DEPTH TO GROUNDWATER VARIES, SEE GEOTECH REPORT.
BASELINE BMPs INCLUDE:
- PRESERVATION OF NATURAL AREAS
- TRASH STORAGE AREAS AND TRASH CANS WITH LIDS
- INLET STENCILING
- MANAGEMENT OF AIR CONDITIONING CONDENSATE AND FIRE TEST SPRINKLER DISCHARGES

**BMP SUMMARY TABLE**

| DMA ID | DMA TYPE | DMA SIZE (AC.) | BMP ID | BMP FOOTPRINT (SF) | BMP TYPE | MAINTENANCE CATEGORY |
|---|---|---|---|---|---|---|
| 9 | DRAINS TO BMP | 3.05 | BASIN 3A | 2,422 | LINED BIOFILTRATION (BF-1) | 2 |
| 10 | DRAINS TO BMP | 1.21 | BASIN 3B | 3,361 | LINED BIOFILTRATION (BF-1) | 2 |
| 11 | DRAINS TO BMP | 9.52 | BASIN 3C | 7,232 | PARTIAL BIOFILTRATION (PR-1) | 2 |
| 30-1 | DRAINS TO BMP | 9.17 | 30-1 | N/A | PRE-TREATMENT | 2 |
| 12 | DRAINS TO BMP | 15.95 | BASIN 3D | 15,325 | LINED BIOFILTRATION (BF-1) | 2 |
| 30-1 | DRAINS TO BMP | 15.23 | 30-1 | N/A | PRE-TREATMENT | 2 |
| 22 | DRAINS TO BMP | 2.37 | BASIN 3J | 2,628 | LINED BIOFILTRATION (BF-1) | 1 |
| 19 | DRAINS TO BMP | 2.52 | BASIN 3K | 2,512 | LINED BIOFILTRATION (BF-1) | 1 |

NOTE: MOST HILLSIDE DRAINAGE TO BE BYPASSED AWAY FROM POLLUTANT CONTROL BMPS. MOST HILLSIDE AREAS ARE CONSIDERED SELF-MITIGATING* AND MOST AREAS WILL NOT COMMINGLE WITH ONSITE RUNOFF FOR POLLUTANT TREATMENT.

*SELF-MITIGATING AREAS PER THIS SHEET ARE AS FOLLOWS: 30-40, 44-46, 48-53, 64-68, 91, 93, 95, 101-104

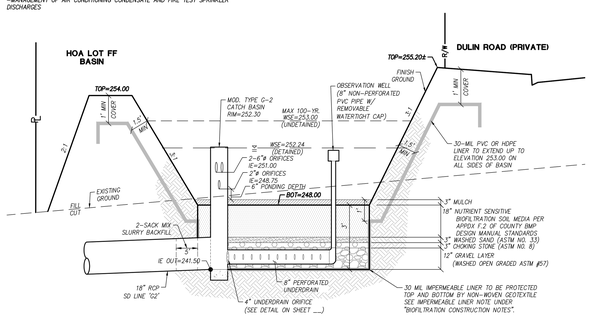


**SECTION 3A-3A, BMP 3A**
**LINED BIOFILTRATION (PRIVATE)**
*NOT TO SCALE*

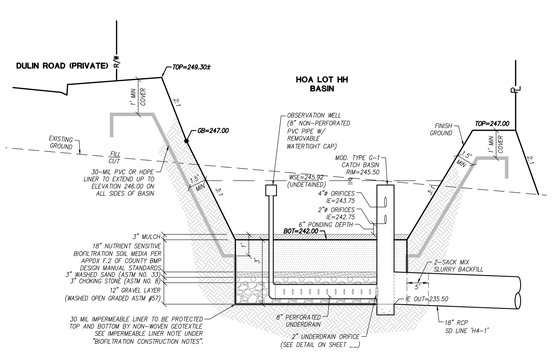


**SECTION 3B-3B, BMP 3B**
**LINED BIOFILTRATION (PRIVATE)**
*NOT TO SCALE*

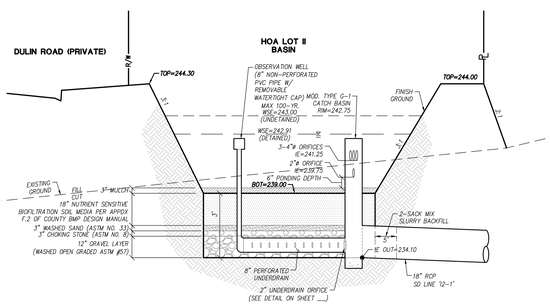


**SECTION 3C-3C, BMP 3C**
**BIOFILTRATION W/ PARTIAL**
*NOT TO SCALE*

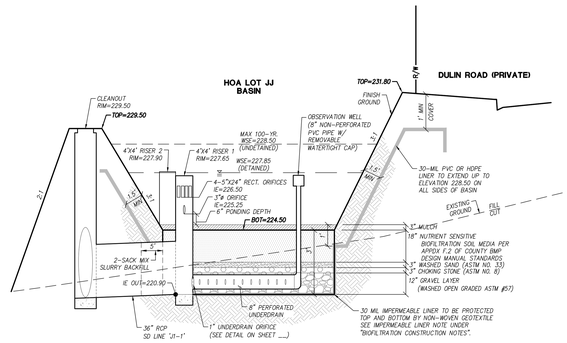


**SECTION 3D-3D, BMP 3D**
**LINED BIOFILTRATION (PRIVATE)**
*NOT TO SCALE*

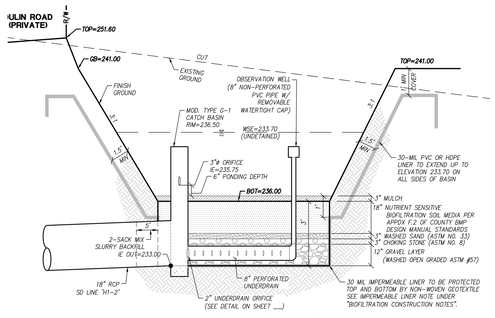


**SECTION 3J-3J, BMP 3J**
**LINED BIOFILTRATION (PRIVATE)**
*NOT TO SCALE*

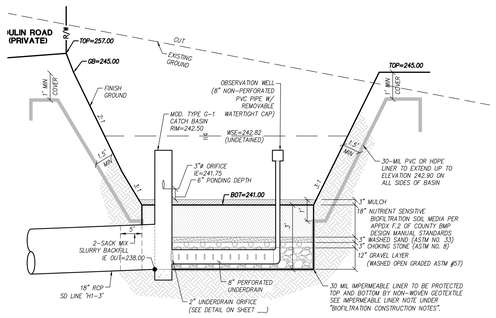


**SECTION 3K-3K, BMP 3K**
**LINED BIOFILTRATION (PRIVATE)**
*NOT TO SCALE*

**IB-138** — **Approx. Location of Infiltration/Percoloation Boring**

**GW-28** — **Approx. Location of Groundwater Verification Boring**




100 50 0 100 200 300
SCALE: 1"=100'

**Infiltration Test Location Map**

Figure 1c

Geocon Project No. G3198-52-01

| | |
|---|---|
| SCALE: | 1"=100' |
| JOB #: | 4192.10 |
| CREATED: | 08/07/20 |

PREPARED BY:
PROJECT DESIGN CONSULTANTS
Planning | Landscape Architecture | Engineering | Survey
701 B Street, Suite 800
San Diego, CA 92101
619.235.6471 Tel
619.234.0349 Fax

**COUNTY OF SAN DIEGO**
**OCEAN BREEZE RANCH**
*DRAINAGE MANAGEMENT AREA AND BMP EXHIBIT*
*EXHIBIT 3 OF 5*

File Name G:\CA-SAND-PD\Projects\4192.10\Engr\Reports\SWQMP-FE\ATTACHMENTS\A2- DMA EXHIBITS & CONST. PLAN SHEETS\DMA EXH.dwg, Date Plotted: Last 4/30/2024 3:46:30 PM

## LEGEND:

- DRAINAGE MANAGEMENT AREA
- DMA BOUNDARY PRE-TREATMENT
- XX.XX AC — DRAINAGE SUBAREA ACREAGE
- SELF-MITIGATING AREA
- SELF-RETAINING AREA
- ACP TRIBUTARY AREA
- BMP BASIN BOTTOM SURFACE HATCH
- PROPOSED BYPASS AREA UNTREATED BY PROPOSED BMP
- DISPERSION AREA
- PLANNING AREA BOUNDARY
- LOT LINE
- WATERS OF THE US AND/OR STATE
- EXISTING FLOODPLAIN
- PROPOSED FLOODPLAIN
- EXISTING MAJOR CONTOUR
- EXISTING MINOR CONTOUR
- PROPOSED MAJOR CONTOUR
- PROPOSED MINOR CONTOUR
- PROPOSED STORM DRAIN
- 100' LIMITED BLDG ZONE BUFFER / 100' BIO BUFFER ZONE — BIOLOGICAL SENSITIVE HABITATS
- SOIL TYPE A
- SOIL TYPE B
- SOIL TYPE C (NO HATCH)
- SOIL TYPE D

HYDROLOGIC SOIL GROUP TYPES: A, B, C, & D
DEPTH TO GROUNDWATER VARIES, SEE GEOTECH REPORT.
BASELINE BMPs INCLUDE:
- PRESERVATION OF NATURAL AREAS
- TRASH STORAGE AREAS AND TRASH CANS WITH LIDS
- INLET STENCILING
- MANAGEMENT OF AIR CONDITIONING CONDENSATE AND FIRE TEST SPRINKLER DISCHARGES

**BMP SUMMARY TABLE**

| DMA ID | DMA TYPE | DMA SIZE (AC.) | BMP ID | BMP FOOTPRINT (SF) | BMP TYPE | MAINTENANCE CATEGORY |
|---|---|---|---|---|---|---|
| 21 | DRAINS TO BMP | 1.97 | BASIN 3H | 1,846 | LINED BIOFILTRATION (BF-1) | 4 |
| 17 | DRAINS TO BMP | 4.78 | BASIN 3I | 2,992 | LINED BIOFILTRATION (BF-1) | 1 |
| 13 | DRAINS TO BMP | 1.45 | BASIN 3E | 1,600 | LINED BIOFILTRATION (BF-1) | 2 |
| 14 | DRAINS TO BMP | 1.46 | BASIN 3F | 1,662 | LINED BIOFILTRATION (BF-1) | 2 |
| 15 | DRAINS TO BMP | 2.15 | BASIN 3G | 1,852 | LINED BIOFILTRATION (BF-1) | 2 |

NOTE: MOST HILLSIDE DRAINAGE TO BE BYPASSED AWAY FROM POLLUTANT CONTROL BMPS. MOST HILLSIDE AREAS ARE CONSIDERED SELF-MITIGATING* AND MOST AREAS WILL NOT COMMINGLE WITH ONSITE RUNOFF FOR POLLUTANT TREATMENT.

*SELF-MITIGATING AREAS PER THIS SHEET ARE AS FOLLOWS: 41-43, 47 & 63

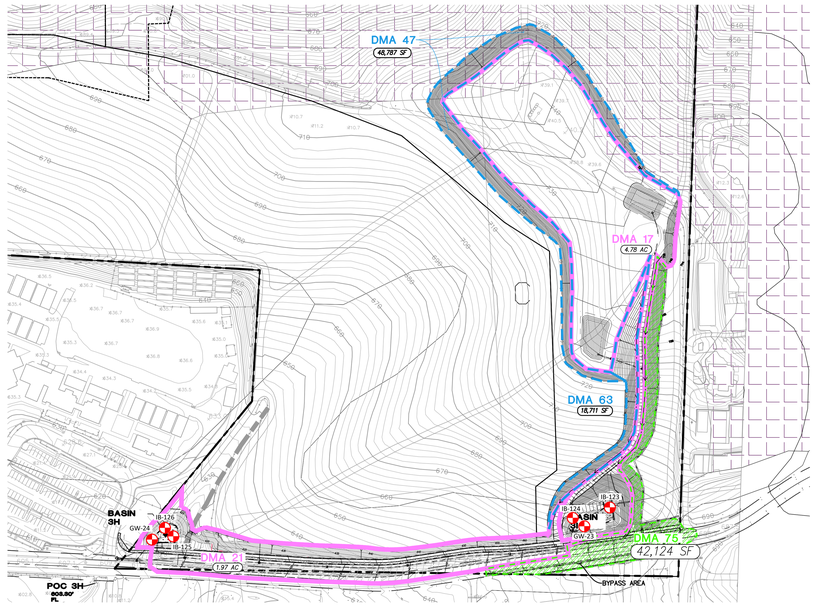


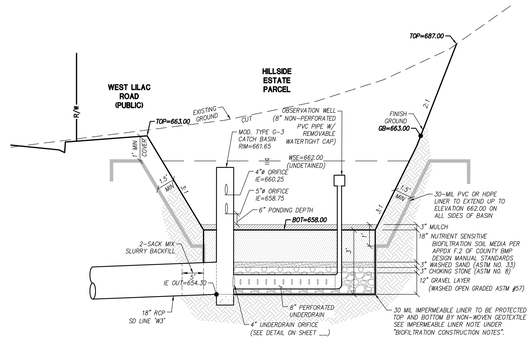


**SECTION 3I-3I: BMP 3I**
**LINED BIOFILTRATION (PRIVATE)**
NOT TO SCALE

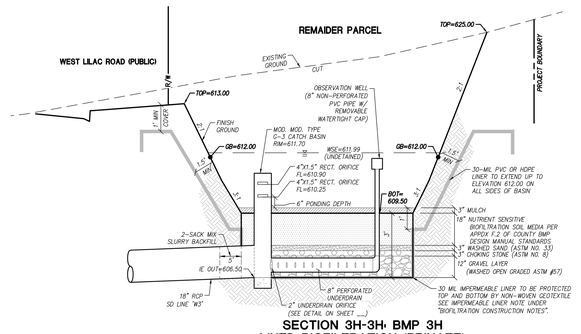


**SECTION 3H-3H: BMP 3H**
**LINED BIOFILTRATION (PRIVATE)**
NOT TO SCALE

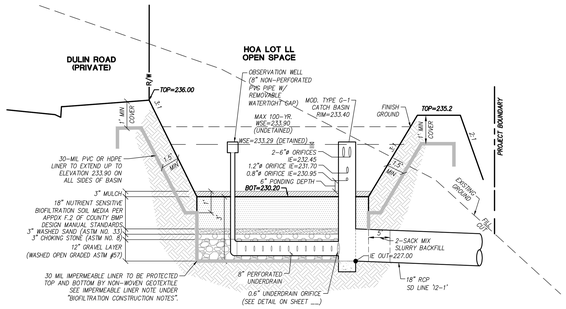


**SECTION 3E-3E: BMP 3E**
**LINED BIOFILTRATION (PRIVATE)**

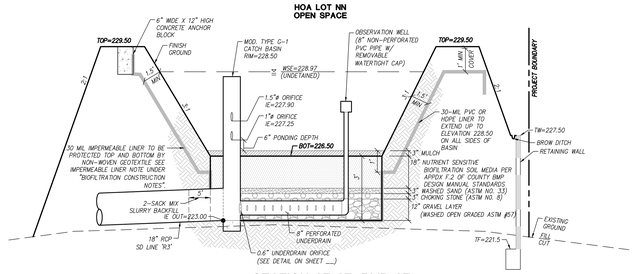


**SECTION 3F-3F: BMP 3F**
**LINED BIOFILTRATION (PRIVATE)**
NOT TO SCALE

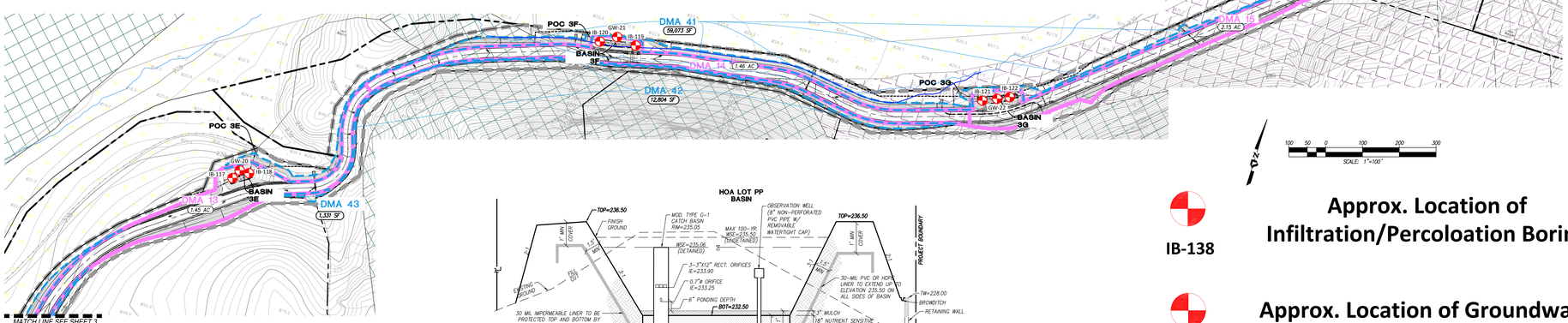





**SECTION 3G-3G: BMP 3G**
**LINED BIOFILTRATION (PRIVATE)**
NOT TO SCALE

**IB-138** — **Approx. Location of Infiltration/Percoloation Boring**

**GW-28** — **Approx. Location of Groundwater Verification Boring**

**Infiltration Test Location Map**

Figure 1d

Geocon Project No. G3198-52-01

| | | | |
|---|---|---|---|
| SCALE: 1"=100' | PREPARED BY: PROJECT DESIGN CONSULTANTS Planning \| Landscape Architecture \| Engineering \| Survey — 701 B Street, Suite 800 San Diego, CA 92101 619.235.6471 Tel 619.234.0349 Fax | COUNTY OF SAN DIEGO | |
| JOB #: 4192.10 | | OCEAN BREEZE RANCH | |
| CREATED: 08/07/20 | | DRAINAGE MANAGEMENT AREA AND BMP EXHIBIT EXHIBIT 4 OF 5 | |




HYDROLOGIC SOIL GROUP MAP

From: Appendix D- Approved Infiltration Rate Assessment Methods

**Basin Name** 1A
**Assumed Infl. Bot. = ±** 225 **ft. elv, GW elv=** <210 **ft, Cut/Fill** Fill
**USDA Soil** Visalia Sandy Loam/Ramona Gravelly Sand Loam/Cieneba Coarse Sandy Loam
**HSG =** A/C **, Ksat: narrative (& in/hr)** high, 1.98-5.95 in/hr; mod. high, 0.20-0.57 in/hr
**Geologic Unit:** AF, Qoa, Kcc

**Table D.1-1: Considerations for Geotechnical Analysis of Infiltration Restrictions**

| Restriction Element | | Is Element Applicable? (Yes/No) |
|---|---|---|
| Mandatory Considerations | BMP is within 100' of Contaminated Soils | NO |
| | BMP is within 100' of Industrial Activities Lacking Source Control | NO |
| | BMP is within 100' of Well/Groundwater Basin | NO |
| | BMP is within 50' of Septic Tanks/Leach Fields | NO |
| | BMP is within 10' of Structures/Tanks/Walls | NO |
| | BMP is within 10' of Sewer Utilities | NO |
| | BMP is within 10' of Groundwater Table | NO |
| | BMP is within Hydric Soils | NO |
| | BMP is within Highly Liquefiable Soils and has Connectivity to Structures | NO |
| | BMP is within 1.5 Times the Height of Adjacent Steep Slopes (≥25%) | NO |
| | County Staff has Assigned "Restricted" Infiltration Category | |
| Optional Considerations | BMP is within Predominantly Type D Soil | NO |
| | BMP is within 10' of Property Line | NO |
| | BMP is within Fill Depths of ≥5' (Existing or Proposed) | YES |
| | BMP is within 10' of Underground Utilities | NO |
| | BMP is within 250' of Ephemeral Stream | NO |
| | Other (Provide detailed geotechnical support) BMP within 10' of Bedrock/Obstruction | YES |
| Result | Based on examination of the best available information, **I have not identified any restrictions above.** | **Unrestricted** |
| | Based on examination of the best available information, **I have identified one or more restrictions above.** | **X Restricted** |

**Table D.2-1: Elements for Determination of Design Infiltration Rates**

| Item | Value | Unit |
|---|---|---|
| Initial Percolation Rate: Identify per Section D.2.1 in/hr (Porchet) (5.5 + 2.50)/2 = | 4.0 | in/hr |
| Corrected Infiltration Rate: Identify per Section D.2.2 in/hr | 0.183 | in/hr |
| Safety Factor: Identify per Section D.2.3 unitless | Min 2.0 | unitless |
| Design Infiltration Rate: Corrected Infiltration Rate ÷ Safety Factor in/hr | 0.091 | in/hr |

Using USDA maps, if NRCS soil type present within a proposed BMP location, Default design infiltration rates (in/hr) for each NRCS soil type are: A=0.300, B=0.200, C=0.100, D=0.025, Restricted=0.000. Use of these default design infiltration rates does not require application of any correction factors or safety factors.

**Table D.2-3: Determination of Safety Factor**

| Consideration | | Assigned Weight (w) | Factor Value (v) | Product (p) p = w x v |
|---|---|---|---|---|
| Suitability Assessment (A) | Infiltration Testing Method | 0.25 | Refer to Table D.2-4 | 2 x 0.25 |
| | Soil Texture Class | 0.25 | | 1 x 0.25 |
| | Soil Variability | 0.25 | | 2 x 0.25 |
| | Depth to Groundwater/Obstruction | 0.25 | | 1 x 0.25 |
| | Suitability Assessment Safety Factor, $S_A = \Sigma p$ | | | 1.50 |
| Design (B) | Pretreatment | 0.50 | Refer to Table D.2-4 | |
| | Resiliency | 0.25 | | |
| | Compaction | 0.25 | | |
| | Design Safety Factor, $S_B = \Sigma p$ | | | |
| Safety Factor, $S = S_A \times S_B$ (Must be always greater than or equal to 2) | | | | Min 2.0 |

**GeoSoils, Inc.**

# BORING LOG

*PROJECT:* OCEAN BREEZE
5280 W. Lilac Road, Bonsall

*W.O.* 6960-A12-SC *BORING* IB-103 *SHEET* 1 *OF* 1

*DATE EXCAVATED* 1-20-21 *LOGGED BY:* MS *APPROX. ELEV.:* 226'

*SAMPLE METHOD:* BASIN 1A

| Depth (ft.) | Sample: Bulk | Sample: Undisturbed | Sample: Blows/Ft. | USCS Symbol | Dry Unit Wt. (pcf) | Moisture (%) | Saturation (%) | Material Description |
|---|---|---|---|---|---|---|---|---|
| 0 | | | | SM | | | | **COLLUVIUM:** |
| | | | | SM | | | | @ 0' SILTY SAND, yellowish brown, dry, medium dense; fine to very coarse sand. |
| 5 | | | | | | | | **WEATHERED GRANITICS:** @ 1½' SILTY SAND, yellow brown to pale yellow, dry, dense to very dense; disintegrates to fine to very coarse sand. |
| | | | | | | | | Total Depth = 5' |
| | | | | | | | | No Groundwater or Caving Encountered |
| 10 | | | | | | | | |
| 15 | | | | | | | | |
| 20 | | | | | | | | |
| 25 | | | | | | | | |
| 30 | | | | | | | | |

▼ *Standard Penetration Test*
⌶ *Undisturbed, Ring Sample*
▽ *Groundwater*
♀ *Seepage*

**GeoSoils, Inc.**

*PLATE* _____

**GeoSoils, Inc.**

# BORING LOG

*PROJECT:* OCEAN BREEZE
5280 W. Lilac Road, Bonsall

*W.O.* 6960-A12-SC *BORING* IB-104 *SHEET* 1 *OF* 1

*DATE EXCAVATED* 1-20-21 *LOGGED BY:* MS *APPROX. ELEV.:* 228'

*SAMPLE METHOD:* BASIN 1A

| Depth (ft.) | Sample: Bulk | Sample: Undisturbed | Sample: Blows/Ft. | USCS Symbol | Dry Unit Wt. (pcf) | Moisture (%) | Saturation (%) | Material Description |
|---|---|---|---|---|---|---|---|---|
| 0 | | | | SM | | | | **COLLUVIUM:** |
| | | | | SM | | | | @ 0' SILTY SAND, yellowish brown, dry, medium dense, fine to very coarse sand. |
| | | | | | | | | **WEATHERED GRANITICS:** |
| 5 | | | | | | | | @ 1' SILTY SAND, pale yellow to yellowish brown, dry to damp, dense to very dense; disintegrates to fine to very coarse sand. |
| | | | | | | | | Total Depth = 5' |
| | | | | | | | | No Groundwater or Caving Encountered |
| | | | | | | | | Backfilled 1-21-21 |
| 10 | | | | | | | | |
| 15 | | | | | | | | |
| 20 | | | | | | | | |
| 25 | | | | | | | | |
| 30 | | | | | | | | |

▼ *Standard Penetration Test*
⌶ *Undisturbed, Ring Sample*
▽ *Groundwater*
♀ *Seepage*

**GeoSoils, Inc.**

# BORING LOG

*PROJECT:* OCEAN BREEZE
5280 W. Lilac Road, Bonsall

*W.O.* 6960-A12-SC *BORING* GW-13 *SHEET* 1 *OF* 1

*DATE EXCAVATED* 1-20-21 *LOGGED BY:* MS *APPROX. ELEV.:* 225'

*SAMPLE METHOD:* BASIN 1A

| Depth (ft.) | Sample: Bulk | Sample: Undisturbed | Sample: Blows/Ft. | USCS Symbol | Dry Unit Wt. (pcf) | Moisture (%) | Saturation (%) | Material Description |
|---|---|---|---|---|---|---|---|---|
| 0 | | | | SM | | | | **COLLUVIUM:** |
| | | | | SM | | | | @ 0' SILTY SAND, yellowish brown, dry, medium dense; fine to very coarse sand. |
| | | | | | | | | **WEATHERED GRANITICS:** |
| | | | | | | | | @ 1' SILTY SAND, yellowish brown, dry to damp, medium dense; disintegrates to fine to coarse sand. |
| 5 | | | | | | | | @ 5' As per 1'; olive brown, medium dense to dense. |
| 10 | | | | | | | | |
| 15 | | | | | | | | Total Depth = 15'<br>No Groundwater or Caving Encountered<br>Backfilled 1-21-21 |
| 20 | | | | | | | | |
| 25 | | | | | | | | |
| 30 | | | | | | | | |

▼ *Standard Penetration Test*
⌶ *Undisturbed, Ring Sample*
▽ *Groundwater*
♀ *Seepage*

**GeoSoils, Inc.**

*PLATE* _____

Basin 1A

## Percolation Test Data Sheet

| | | | | | |
|---|---|---|---|---|---|
| Project: | Ocean Breeze | Project No: | 6960-A12 | Date: | 1-21-21 |
| Test Hole No: | IB-103 | Tested By: | Matt S. | | |
| Depth of Test Hole, $D_T$: | 50 | USCS Soil Classification: | | | |
| Test Hole Dimensions (Inches) | | | Length | Width | |
| Diameter (if round)= | 8" | Sides (if rectangular)= | | | |

Sandy Soil Criteria Test*

| Trial No. | Start Time | Stop Time | Time Interval, (min.) | Initial Depth to Water (in.) | Final Depth to Water (in.) | Change in Water Level (in.) | Greater than or Equal to 6"? (y/n) |
|---|---|---|---|---|---|---|---|
| 1 | 9:04 | 9:29 | 25 | 12.75 | 16.50 | 3.75 | N |
| 2 | 9:30 | 9:55 | 25 | 13.00 | 16.25 | 3.25 | N |

*If two consecutive measurements show that six inches of water seeps away in less than 25 minutes, the test shall be run for an additional hour with measurements taken every 10 minutes. Other wise, pre-soak (fill) overnight. Obtain at least twelve measurements per hole over at least six hours (approximately 30 minute intervals) with a precision of at least 0.25".

| Trial No. | Start Time | Stop Time | $\Delta t$ Time Interval (min.) | $D_o$ Initial Depth to Water (in.) | $D_f$ Final Depth to Water (in.) | $\Delta D$ Change in Water Level (in.) | Percolation Rate (min./in.) |
|---|---|---|---|---|---|---|---|
| 1 | 10:41 | 11:11 | 30 | 9.50 | 12.75 | 3.25 | 9.2 |
| 2 | 11:12 | 11:42 | ↓ | 10.00 | 13.25 | 3.25 | 9.2 |
| 3 | 11:47 | 12:17 | | 7.75 | 11.00 | 3.25 | 9.2 |
| 4 | 12:18 | 12:48 | | 7.00 | 10.25 | 3.25 | 9.2 |
| 5 | 12:52 | 1:22 | | 7.00 | 10.25 | 3.25 | 9.2 |
| 6 | 1:23 | 1:53 | | 7.50 | 10.75 | 3.25 | 9.2 |
| 7 | 1:57 | 2:27 | | 7.75 | 11.00 | 3.25 | 9.2 |
| 8 | 2:28 | 2:58 | | 7.00 | 10.00 | 3 | 10 |
| 9 | 2:59 | 3:29 | | 7.25 | 10.25 | 3 | 10 |
| 10 | 3:30 | 4:00 | | 7.00 | 10.00 | 3 | 10 |
| 11 | 4:01 | 4:31 | | 7.25 | 10.00 | 2.75 | 10.9 |
| 12 | 4:32 | 5:02 | | 7.50 | 10.25 | 2.75 | 10.9 |
| 13 | | | | | | | |
| 14 | | | | | | | |
| 15 | | | | | | | |

5.5 in/hr

COMMENTS:

$K_t = 0.255$ in/hr

Table 5 – Sample Test Data Form for Percolation Test

Basin 1A

## Percolation Test Data Sheet

| | | | | | |
|---|---|---|---|---|---|
| Project: | Ocean Breeze | Project No: | 6960-A12 | Date: | 1-21-21 |
| Test Hole No: | IB-104 | Tested By: | Matt S. | | |
| Depth of Test Hole, $D_i$: | 51" | USCS Soil Classification: | | | |
| Test Hole Dimensions (inches) | | | Length | Width | |
| Diameter (if round)= | 8" | Sides (if rectangular)= | | | |

Sandy Soil Criteria Test*

| Trial No. | Start Time | Stop Time | Time Interval, (min.) | Initial Depth to Water (in.) | Final Depth to Water (in.) | Change in Water Level (in.) | Greater than or Equal to 6"? (y/n) |
|---|---|---|---|---|---|---|---|
| 1 | 9:06 | 9:31 | 25 | 9.75 | 11.75 | 2.00 | N |
| 2 | 9:32 | 9:57 | 25 | 10.00 | 12.00 | 2.00 | N |

*If two consecutive measurements show that six inches of water seeps away in less than 25 minutes, the test shall be run for an additional hour with measurements taken every 10 minutes. Other wise, pre-soak (fill) overnight. Obtain at least twelve measurements per hole over at least six hours (approximately 30 minute intervals) with a precision of at least 0.25".

| Trial No. | Start Time | Stop Time | $\Delta t$ Time Interval (min.) | $D_o$ Initial Depth to Water (in.) | $D_f$ Final Depth to Water (in.) | $\Delta D$ Change in Water Level (in.) | Percolation Rate (min./in.) |
|---|---|---|---|---|---|---|---|
| 1 | 10:43 | 11:13 | 30 | 7.50 | 9.50 | 2 | 15 |
| 2 | 11:14 | 11:44 | " | 8.00 | 9.75 | 1.75 | 17 |
| 3 | 11:48 | 12:18 | " | 6.75 | 8.25 | 1.50 | 20 |
| 4 | 12:19 | 12:49 | " | 7.00 | 8.50 | 1.50 | 20 |
| 5 | 12:53 | 1:23 | " | 6.75 | 8.25 | 1.50 | 20 |
| 6 | 1:24 | 1:54 | " | 6.50 | 8.00 | 1.50 | 20 |
| 7 | 1:58 | 2:28 | " | 7.50 | 9.00 | 1.50 | 20 |
| 8 | 2:29 | 2:59 | " | 7.25 | 8.75 | 1.50 | 20 |
| 9 | 3:00 | 3:30 | " | 7.00 | 8.25 | 1.25 | 24 |
| 10 | 3:31 | 4:01 | " | 6.75 | 8.00 | 1.25 | 24 |
| 11 | 4:02 | 4:32 | " | 7.50 | 8.75 | 1.25 | 24 |
| 12 | 4:33 | 5:03 | " | 7.00 | 8.25 | 1.25 | 24 |
| 13 | | | | | | | |
| 14 | | | | | | | |
| 15 | | | | | | | |

2.50 in/hr

COMMENTS:

$K_s$ = 0.11 in/hr

Table 5 – Sample Test Data Form for Percolation Test

From: Appendix D- Approved Infiltration Rate Assessment Methods

**Basin Name** 1B
**Assumed Infl. Bot. = ±** 298.5 **ft. elv, GW elv=** 290 **ft, Cut/Fill** Cut
**USDA Soil** Bonsall Sandy Loam 2-9% Slopes
**HSG =** D **, Ksat: narrative (& in/hr)** Very low to low (0.00 - 0.06 in/hr)
**Geologic Unit:** Kcc Granitics

**Table D.1-1: Considerations for Geotechnical Analysis of Infiltration Restrictions**

| Restriction Element | | Is Element Applicable? (Yes/No) |
|---|---|---|
| Mandatory Considerations | BMP is within 100' of Contaminated Soils | NO |
| | BMP is within 100' of Industrial Activities Lacking Source Control | NO |
| | BMP is within 100' of Well/Groundwater Basin | NO |
| | BMP is within 50' of Septic Tanks/Leach Fields | NO |
| | BMP is within 10' of Structures/Tanks/Walls | NO |
| | BMP is within 10' of Sewer Utilities | NO |
| | BMP is within 10' of Groundwater Table | YES |
| | BMP is within Hydric Soils | NO |
| | BMP is within Highly Liquefiable Soils and has Connectivity to Structures | NO |
| | BMP is within 1.5 Times the Height of Adjacent Steep Slopes (≥25%) | NO |
| | County Staff has Assigned "Restricted" Infiltration Category | |
| Optional Considerations | BMP is within Predominantly Type D Soil | YES |
| | BMP is within 10' of Property Line | NO |
| | BMP is within Fill Depths of ≥5' (Existing or Proposed) | NO |
| | BMP is within 10' of Underground Utilities | NO |
| | BMP is within 250' of Ephemeral Stream | NO |
| | Other (Provide detailed geotechnical support) BMP within 10' of Bedrock/Obstruction | YES |
| Result | Based on examination of the best available information, **I have not identified any restrictions above.** | **Unrestricted** |
| | Based on examination of the best available information, **I have identified one or more restrictions above.** | **X Restricted** |

**Table D.2-1: Elements for Determination of Design Infiltration Rates**

| Item | Value | Unit |
|---|---|---|
| Initial Infiltration Rate: Identify per Section D.2.1 in/hr | | in/hr |
| Corrected Infiltration Rate: Identify per Section D.2.2 in/hr | Default | in/hr |
| Safety Factor: Identify per Section D.2.3 unitless | N/A | unitless |
| Design Infiltration Rate: Corrected Infiltration Rate ÷ Safety Factor in/hr | 0.025 | in/hr |

Using USDA maps, if NRCS soil type present within a proposed BMP location, Default design infiltration rates (in/hr) for each NRCS soil type are: A=0.300, B=0.200, C=0.100, D=0.025, Restricted=0.000. Use of these default design infiltration rates does not require application of any correction factors or safety factors.

**Table D.2-3: Determination of Safety Factor**

| Consideration | | Assigned Weight (w) | Factor Value (v) | Product (p) p = w x v |
|---|---|---|---|---|
| Suitability Assessment (A) | Infiltration Testing Method | 0.25 | Refer to Table D.2-4 | |
| | Soil Texture Class | 0.25 | | |
| | Soil Variability | 0.25 | | |
| | Depth to Groundwater/Obstruction | 0.25 | | |
| | Suitability Assessment Safety Factor, $S_A = \Sigma p$ | | | |
| Design (B) | Pretreatment | 0.50 | Refer to Table D.2-4 | |
| | Resiliency | 0.25 | | |
| | Compaction | 0.25 | | |
| | Design Safety Factor, $S_B = \Sigma p$ | | | |
| Safety Factor, $S = S_A \times S_B$ (Must be always greater than or equal to 2) | | | | N/A |

County of San Diego

From: Appendix D- Approved Infiltration Rate Assessment Methods

**Basin Name** 2A
**Assumed Infl. Bot. = ±** 184.4 **ft. elv, GW elv=** <174 **ft, Cut/Fill** Cut
**USDA Soil** Visalia Sandy Loam
**HSG =** A **, Ksat: narrative (& in/hr)** High, 1.98-5.95 in/hr
**Geologic Unit:** Qal

**Table D.1-1: Considerations for Geotechnical Analysis of Infiltration Restrictions**

| Restriction Element | | Is Element Applicable? (Yes/No) |
|---|---|---|
| Mandatory Considerations | BMP is within 100' of Contaminated Soils | NO |
| | BMP is within 100' of Industrial Activities Lacking Source Control | NO |
| | BMP is within 100' of Well/Groundwater Basin | YES |
| | BMP is within 50' of Septic Tanks/Leach Fields | NO |
| | BMP is within 10' of Structures/Tanks/Walls | NO |
| | BMP is within 10' of Sewer Utilities | NO |
| | BMP is within 10' of Groundwater Table | NO |
| | BMP is within Hydric Soils | NO |
| | BMP is within Highly Liquefiable Soils and has Connectivity to Structures | YES |
| | BMP is within 1.5 Times the Height of Adjacent Steep Slopes (≥25%) | NO |
| | County Staff has Assigned "Restricted" Infiltration Category | |
| Optional Considerations | BMP is within Predominantly Type D Soil | NO |
| | BMP is within 10' of Property Line | NO |
| | BMP is within Fill Depths of ≥5' (Existing or Proposed) | YES |
| | BMP is within 10' of Underground Utilities | NO |
| | BMP is within 250' of Ephemeral Stream | NO |
| | Other (Provide detailed geotechnical support) BMP within 10' of Bedrock/Obstruction | NO |
| Result | Based on examination of the best available information, **I have not identified any restrictions above.** | **Unrestricted** |
| | Based on examination of the best available information, **I have identified one or more restrictions above.** | X **Restricted** |

**Table D.2-1: Elements for Determination of Design Infiltration Rates**

| Item | | Value | Unit |
|---|---|---|---|
| Initial Infiltration Rate: Identify per Section D.2.1 in/hr | (147+54)/2 = | 100.50 | in/hr |
| Corrected Infiltration Rate: Identify per Section D.2.2 in/hr | | 6.326 | in/hr |
| Safety Factor: Identify per Section D.2.3 unitless | | 2.0 | unitless |
| Design Infiltration Rate: Corrected Infiltration Rate ÷ Safety Factor in/hr | | 3.163 | in/hr |

Using USDA maps, if NRCS soil type present within a proposed BMP location, Default design infiltration rates (in/hr) for each NRCS soil type are: A=0.300, B=0.200, C=0.100, D=0.025, Restricted=0.000. Use of these default design infiltration rates does not require application of any correction factors or safety factors.

**Table D.2-3: Determination of Safety Factor**

| Consideration | | Assigned Weight (w) | Factor Value (v) | Product (p) p = w x v |
|---|---|---|---|---|
| Suitability Assessment (A) | Infiltration Testing Method | 0.25 | Refer to Table D.2-4 | 2 x 0.25 |
| | Soil Texture Class | 0.25 | | 1 x 0.25 |
| | Soil Variability | 0.25 | | 2 x 0.25 |
| | Depth to Groundwater/Obstruction | 0.25 | | 2 x 0.25 |
| | Suitability Assessment Safety Factor, $S_A = \Sigma p$ | | | 1.75 |
| Design (B) | Pretreatment | 0.50 | Refer to Table D.2-4 | |
| | Resiliency | 0.25 | | |
| | Compaction | 0.25 | | |
| | Design Safety Factor, $S_B = \Sigma p$ | | | |
| Safety Factor, $S = S_A \times S_B$ (Must be always greater than or equal to 2) | | | | Min 2.0 |

**GeoSoils, Inc.**

# BORING LOG

*PROJECT:* OCEAN BREEZE
5280 W. Lilac Road, Bonsall

*W.O.* 6960-A12-SC *BORING* IB-127 *SHEET* 1 *OF* 1

*DATE EXCAVATED* 2-11-21 *LOGGED BY:* MS *APPROX. ELEV.:* 187'

*SAMPLE METHOD:* BASIN 2A

| Depth (ft.) | Sample: Bulk | Sample: Undisturbed | Sample: Blows/Ft. | USCS Symbol | Dry Unit Wt. (pcf) | Moisture (%) | Saturation (%) | Material Description |
|---|---|---|---|---|---|---|---|---|
| 0 | | | | SM | | | | **COLLUVIUM:** @ 0' SILTY SAND, dark olive brown, damp to moist, loose; fine to very coarse grain sand. |
| | | | | SM | | | | **ALLUVIUM:** @ 2½' SAND with trace SILT, yellowish brown, damp, loose; fine to very coarse grain sand, well graded. |
| 5 | | | | SP | | | | @ 4½' As per 2½; fine to medium grain sand, poorly graded. |
| | | | | | | | | Total Depth = 5' |
| | | | | | | | | No Groundwater or Caving Encountered |
| | | | | | | | | Backfilled 2-11-21 |
| 10 | | | | | | | | |
| 15 | | | | | | | | |
| 20 | | | | | | | | |
| 25 | | | | | | | | |
| 30 | | | | | | | | |

▼ *Standard Penetration Test*
⌶ *Undisturbed, Ring Sample*
▽ *Groundwater*
♀ *Seepage*

**GeoSoils, Inc.**

*PLATE* _____

**GeoSoils, Inc.**

# BORING LOG

*PROJECT:* OCEAN BREEZE
5280 W. Lilac Road, Bonsall

*W.O.* 6960-A12-SC *BORING* IB-128 *SHEET* 1 *OF* 1

*DATE EXCAVATED* 2-11-21 *LOGGED BY:* MS *APPROX. ELEV.:* 187'

*SAMPLE METHOD:* BASIN 2A

| Depth (ft.) | Sample: Bulk | Sample: Undisturbed | Sample: Blows/Ft. | USCS Symbol | Dry Unit Wt. (pcf) | Moisture (%) | Saturation (%) | Material Description |
|---|---|---|---|---|---|---|---|---|
| 0 | | | | SM | | | | **COLLUVIUM:** @ 0' SILTY SAND, dark brown, damp, loose; fine to very coarse grain sand. |
| | | | | SW<br>SP | | | | **ALLUVIUM:** @ 2½' SAND, yellowish brown to olive brown, damp, loose; fine to very coarse grain sand, well graded. @ 4' fine SAND, light gray to yellowish brown, damp, loose; poorly graded. |
| 5 | | | | | | | | Total Depth = 5'<br>No Groundwater or Caving Encountered<br>Backfilled 2-11-21 |
| 10 | | | | | | | | |
| 15 | | | | | | | | |
| 20 | | | | | | | | |
| 25 | | | | | | | | |
| 30 | | | | | | | | |

*Standard Penetration Test*
*Undisturbed, Ring Sample*
*Groundwater*
*Seepage*

**GeoSoils, Inc.**

# BORING LOG

*PROJECT:* OCEAN BREEZE
5280 W. Lilac Road, Bonsall

*W.O.* 6960-A12-SC *BORING* GW-25 *SHEET* 1 *OF* 1

*DATE EXCAVATED* 2-11-21 *LOGGED BY:* MS *APPROX. ELEV.:* 186'

*SAMPLE METHOD:* BASIN 2A

| Depth (ft.) | Sample: Bulk | Sample: Undisturbed | Sample: Blows/Ft. | USCS Symbol | Dry Unit Wt. (pcf) | Moisture (%) | Saturation (%) | Material Description |
|---|---|---|---|---|---|---|---|---|
| 0 | | | | SM | | | | **COLLUVIUM:** @ 0' SILTY SAND, dark olive brown, damp, loose; fine to very coarse grain sand. |
| 5 | | | | SW<br>SP | | | | **ALLUVIUM:** @ 3' SAND with trace SILT, yellowish brown, damp, loose; fine to very coarse grain sand, well graded. @ 5' fine SAND, olive brown to yellowish brown, damp, loose; very fine to fine grain sand, poorly graded. |
| 10 | | | | SP | | | | @ 10' As per 5'; yellowish brown, fine to medium grain sand. |
| 15 | | | | ML | | | | @ 12' Groundwater encountered. @ 13' SANDY SILT, dark grayish brown and olive brown, wet to saturated, loose to medium dense; fine to medium grain sand. |
| 20 | | | | | | | | Total Depth = 15' Groundwater & Caving Encountered @ 12' Backfilled 2-11-21 |
| 25 | | | | | | | | |
| 30 | | | | | | | | |

*Standard Penetration Test*
*Undisturbed, Ring Sample*
*Groundwater*
*Seepage*

**GeoSoils, Inc.**

*PLATE* _____

Basin 2A

## Percolation Test Data Sheet

| | | | | | |
|---|---|---|---|---|---|
| Project: | Ocean Breeze | Project No: | 6960-A12 | Date: | 2-12-21 |
| Test Hole No: | IB-127 | Tested By: | Matt Smelski | | |
| Depth of Test Hole, $D_T$: | 56" | USCS Soil Classification: | SP/SM | | |
| Test Hole Dimensions (inches) | | | Length | Width | |
| Diameter (if round)= | 8 inches | Sides (if rectangular)= | | | |

Sandy Soil Criteria Test*

| Trial No. | Start Time | Stop Time | Time Interval, (min.) | Initial Depth to Water (in.) | Final Depth to Water (in.) | Change in Water Level (in.) | Greater than or Equal to 6"? (y/n) |
|---|---|---|---|---|---|---|---|
| 1 | 8:00 | 8:25 | 25 | 10.00 | 56.00 | 46.00 | Y |
| 2 | 8:25 | 8:50 | 25 | 12.00 | 56.00 | 44.00 | Y |

*If two consecutive measurements show that six inches of water seeps away in less than 25 minutes, the test shall be run for an additional hour with measurements taken every 10 minutes. Other wise, pre-soak (fill) overnight. Obtain at least twelve measurements per hole over at least six hours (approximately 30-minute intervals) with a precision of at least 0.25".

| Trial No. | Start Time | Stop Time | $\Delta t$ Time Interval (min.) | $D_o$ Initial Depth to Water (in.) | $D_f$ Final Depth to Water (in.) | $\Delta D$ Change in Water Level (in.) | Percolation Rate (min./in.) |
|---|---|---|---|---|---|---|---|
| 1 | 9:52 | 9:02 | 10 | 20.00 | 54.00 | 34.00 | 0.29 |
| 2 | 9:03 | 9:13 | 10 | 17.00 | 52.00 | 35.00 | 0.29 |
| 3 | 9:16 | 9:25 | 10 | 16.50 | 46.50 | 30.00 | 0.33 |
| 4 | 9:26 | 9:36 | 10 | 15.50 | 42.50 | 27.00" | 0.37 |
| 5 | 9:37 | 9:47 | 10 | 14.00 | 40.00 | 26.00 | 0.38 |
| 6 | 9:48 | 9:58 | 10 | 16.00 | 40.50 | 24.50 | 0.41 |
| 7 | | | | | | | |
| 8 | | | | | | | |
| 9 | | | | | | | |
| 10 | | | | | | | |
| 11 | | | | | | | |
| 12 | | | | | | | |
| 13 | | | | | | | |
| 14 | | | | | | | |
| 15 | | | | | | | |

= 147 in/hr

COMMENTS:

Table 5 – Sample Test Data Form for Percolation Test

BASIN 2A **Percolation Test Data Sheet**

| Project: | Ocean Breeze | Project No: | 6960-A12 | Date: | 2-12-21 |
|---|---|---|---|---|---|
| Test Hole No: | IB-128 | Tested By: | Matt Smelski | | |
| Depth of Test Hole, $D_T$: | 55" | USCS Soil Classification: | SP/SM | | |
| Test Hole Dimensions (inches) | | | Length | Width | |
| Diameter (if round)= | 8 inches | Sides (if rectangular)= | | | |

Sandy Soil Criteria Test*

| Trial No. | Start Time | Stop Time | Time Interval, (min.) | Initial Depth to Water (in.) | Final Depth to Water (in.) | Change in Water Level (in.) | Greater than or Equal to 6"? (y/n) |
|---|---|---|---|---|---|---|---|
| 1 | 8:01 | 8:26 | 25 | 13.00 | 33.50 | 20.50 | Y |
| 2 | 8:26 | 8:51 | 25 | 13.00 | 31.00 | 18.00 | Y |

*If two consecutive measurements show that six inches of water seeps away in less than 25 minutes, the test shall be run for an additional hour with measurements taken every 10 minutes. Other wise, pre-soak (fill) overnight. Obtain at least twelve measurements per hole over at least six hours (approximately 30 minute intervals) with a precision of at least 0.25".

| Trial No. | Start Time | Stop Time | $\Delta t$ Time Interval (min.) | $D_o$ Initial Depth to Water (in.) | $D_f$ Final Depth to Water (in.) | $\Delta D$ Change in Water Level (in.) | Percolation Rate (min./in.) |
|---|---|---|---|---|---|---|---|
| 1 | 8:55 | 9:05 | 10 | 13.25 | 29.50 | 16.25 | 0.62 |
| 2 | 9:06 | 9:16 | 10 | 12.50 | 27.00 | 14.50 | 0.69 |
| 3 | 9:17 | 9:27 | 10 | 12.75 | 24.50 | 11.75 | 0.85 |
| 4 | 9:28 | 9:38 | 10 | 12.00 | 23.50 | 11.50 | 0.87 |
| 5 | 9:39 | 9:49 | 10 | 13.75 | 23.75 | 10.00 | 1.00 |
| 6 | 9:50 | 10:00 | 10 | 13.50 | 22.50 | 9.00 | 1.11 |
| 7 | | | | | | | |
| 8 | | | | | | | |
| 9 | | | | | | | |
| 10 | | | | | | | |
| 11 | | | | | | | |
| 12 | | | | | | | |
| 13 | | | | | | | |
| 14 | | | | | | | |
| 15 | | | | | | | |

= 54.00 in/hr

COMMENTS:

Table 5 – Sample Test Data Form for Percolation Test

County of San Diego

From: Appendix D- Approved Infiltration Rate Assessment Methods

**Basin Name** 2B
**Assumed Infl. Bot. = ±** 190.5 **ft. elv, GW elv=** 182.5 **ft, Cut/Fill** Cut
**USDA Soil** Visalia Sandy Loam
**HSG =** A **, Ksat: narrative (& in/hr)** high, 1.98 - 5.95 in/hr
**Geologic Unit:** Qal

**Table D.1-1: Considerations for Geotechnical Analysis of Infiltration Restrictions**

| Restriction Element | | Is Element Applicable? (Yes/No) |
|---|---|---|
| Mandatory Considerations | BMP is within 100' of Contaminated Soils | NO |
| | BMP is within 100' of Industrial Activities Lacking Source Control | NO |
| | BMP is within 100' of Well/Groundwater Basin | YES |
| | BMP is within 50' of Septic Tanks/Leach Fields | NO |
| | BMP is within 10' of Structures/Tanks/Walls | NO |
| | BMP is within 10' of Sewer Utilities | NO |
| | BMP is within 10' of Groundwater Table | YES |
| | BMP is within Hydric Soils | NO |
| | BMP is within Highly Liquefiable Soils and has Connectivity to Structures | YES |
| | BMP is within 1.5 Times the Height of Adjacent Steep Slopes (≥25%) | NO |
| | County Staff has Assigned "Restricted" Infiltration Category | |
| Optional Considerations | BMP is within Predominantly Type D Soil | NO |
| | BMP is within 10' of Property Line | NO |
| | BMP is within Fill Depths of ≥5' (Existing or Proposed) | NO |
| | BMP is within 10' of Underground Utilities | NO |
| | BMP is within 250' of Ephemeral Stream | NO |
| | Other (Provide detailed geotechnical support) BMP within 10' of Bedrock/Obstruction | NO |
| Result | Based on examination of the best available information, **I have not identified any restrictions above.** | **Unrestricted** |
| | Based on examination of the best available information, **I have identified one or more restrictions above.** | **X Restricted** |

**Table D.2-1: Elements for Determination of Design Infiltration Rates**

| Item | | Value | Unit |
|---|---|---|---|
| Initial Infiltration Rate: Identify per Section D.2.1 in/hr | (109.5 + 105)/2 = | 107.25 | in/hr |
| Corrected Infiltration Rate: Identify per Section D.2.2 in/hr | | 7.368 | in/hr |
| Safety Factor: Identify per Section D.2.3 unitless | | Min 2.0 | unitless |
| Design Infiltration Rate: Corrected Infiltration Rate ÷ Safety Factor in/hr | | 3.684 | in/hr |

Using USDA maps, if NRCS soil type present within a proposed BMP location, Default design infiltration rates (in/hr) for each NRCS soil type are: A=0.300, B=0.200, C=0.100, D=0.025, Restricted=0.000. Use of these default design infiltration rates does not require application of any correction factors or safety factors.

**Table D.2-3: Determination of Safety Factor**

| Consideration | | Assigned Weight (w) | Factor Value (v) | Product (p) p = w x v |
|---|---|---|---|---|
| Suitability Assessment (A) | Infiltration Testing Method | 0.25 | Refer to Table D.2-4 | 2 x 0.25 |
| | Soil Texture Class | 0.25 | | 1 x 0.25 |
| | Soil Variability | 0.25 | | 1 x 0.25 |
| | Depth to Groundwater/Obstruction | 0.25 | | 2 x 0.25 |
| | Suitability Assessment Safety Factor, $S_A = \Sigma p$ | | | 1.50 |
| Design (B) | Pretreatment | 0.50 | Refer to Table D.2-4 | |
| | Resiliency | 0.25 | | |
| | Compaction | 0.25 | | |
| | Design Safety Factor, $S_B = \Sigma p$ | | | |
| Safety Factor, $S = S_A \times S_B$ (Must be always greater than or equal to 2) | | | | Min 2.0 |

**GeoSoils, Inc.**

# BORING LOG

*PROJECT:* OCEAN BREEZE
5280 W. Lilac Road, Bonsall

*W.O.* 6960-A12-SC *BORING* IB-106 *SHEET* 1 *OF* 1

*DATE EXCAVATED* 1-20-21 *LOGGED BY:* MS *APPROX. ELEV.:* 195'

*SAMPLE METHOD:* BASIN 2B

| Depth (ft.) | Sample: Bulk | Sample: Undisturbed | Sample: Blows/Ft. | USCS Symbol | Dry Unit Wt. (pcf) | Moisture (%) | Saturation (%) | Material Description |
|---|---|---|---|---|---|---|---|---|
| 0 | | | | SM | | | | **ALLUVIUM:** @ 0' SILTY SAND to SAND dark to light yellowish brown, damp, loose to meidum dense; fine to medium sand, poorly graded. |
| 5 | | | | | | | | Total Depth = 5'<br>No Groundwater or Caving Encountered<br>Backfilled 1-20-21 |
| 10 | | | | | | | | |
| 15 | | | | | | | | |
| 20 | | | | | | | | |
| 25 | | | | | | | | |
| 30 | | | | | | | | |

*Standard Penetration Test*
*Undisturbed, Ring Sample*
*Groundwater*
*Seepage*

**GeoSoils, Inc.**

*PLATE* _____

**GeoSoils, Inc.**

# BORING LOG

*PROJECT:* OCEAN BREEZE
5280 W. Lilac Road, Bonsall

*W.O.* 6960-A12-SC *BORING* GW-14 *SHEET* 1 *OF* 1

*DATE EXCAVATED* 1-20-21 *LOGGED BY:* MS *APPROX. ELEV.:* 194'

*SAMPLE METHOD:* BASIN 2B

| Depth (ft.) | Sample: Bulk | Sample: Undisturbed | Sample: Blows/Ft. | USCS Symbol | Dry Unit Wt. (pcf) | Moisture (%) | Saturation (%) | Material Description |
|---|---|---|---|---|---|---|---|---|
| 0 | | | | SM | | | | **ALLUVIUM:** @ 0' SILTY SAND to SAND, light to dark yellowish brown, damp, medium dense; fine to medium grain sand, poorly graded. |
| 5 | | | | | | | | @ 6' As per 0'; interlayered light gray to very dark gray sand, damp to moist. |
| 10 | | | | | | | | @ 10' As per 6'; moist to wet. |
| | | | | SM | | | | @ 12' SILTY SAND, dark gray, wet to saturated, medium dense; fine to very coarse sand, well graded. |
| 15 | | | | | | | | Total Depth = 15'<br>Ground Water Encountered at 11½'<br>No Caving<br>Backfilled 1-21-21 |
| 20 | | | | | | | | |
| 25 | | | | | | | | |
| 30 | | | | | | | | |

*Standard Penetration Test*
*Undisturbed, Ring Sample*
*Groundwater*
*Seepage*

**GeoSoils, Inc.**

*PLATE* _____

**GeoSoils, Inc.**

# BORING LOG

*PROJECT:* OCEAN BREEZE
5280 W. Lilac Road, Bonsall

*W.O.* 6960-A12-SC *BORING* IB-101 *SHEET* 1 *OF* 1

*DATE EXCAVATED* 1-20-21 *LOGGED BY:* MS *APPROX. ELEV.:* 190'

*SAMPLE METHOD:* BASIN 2H

| Depth (ft.) | Sample: Bulk | Sample: Undisturbed | Sample: Blows/Ft. | USCS Symbol | Dry Unit Wt. (pcf) | Moisture (%) | Saturation (%) | Material Description |
|---|---|---|---|---|---|---|---|---|
| 0 | | | | SM | | | | **COLLUVIUM:** |
| | | | | SM | | | | @ 0' SILTY SAND, light to dark grayish brown, dry to damp, medium dense; organics. |
| | | | | | | | | **ALLUVIUM:** |
| 5 | | | | | | | | @ 1½' SILTY SAND, dark reddish brown, damp, medium dense; fine to medium grain sand. |
| | | | | | | | | Total Depth = 5' |
| | | | | | | | | No Groundwater or Caving Encountered |
| | | | | | | | | Backfilled 1-21-21 |
| 10 | | | | | | | | |
| 15 | | | | | | | | |
| 20 | | | | | | | | |
| 25 | | | | | | | | |
| 30 | | | | | | | | |

▼ *Standard Penetration Test*
⌶ *Undisturbed, Ring Sample*
▽ *Groundwater*
♀ *Seepage*

**GeoSoils, Inc.**

*PLATE* _____

Basin 2B

## Percolation Test Data Sheet

| | | | | | |
|---|---|---|---|---|---|
| Project: | Ocean Breeze | Project No: | 6960-A12 | Date: | 1-25-20 |
| Test Hole No: | TB-105 | Tested By: | Matt S. | | |
| Depth of Test Hole, $D_T$: | 53.5" | USCS Soil Classification: | | | |
| Test Hole Dimensions (inches) | | | Length | Width | |
| Diameter (if round)= | 8" | Sides (if rectangular)= | | | |

Sandy Soil Criteria Test*

| Trial No. | Start Time | Stop Time | Time Interval, (min.) | Initial Depth to Water (in.) | Final Depth to Water (in.) | Change in Water Level (in.) | Greater than or Equal to 6"? (y/n) |
|---|---|---|---|---|---|---|---|
| 1 | 8:00 | 8:25 | 25 | 24.00 | 49.00 | 25.00 | Y |
| 2 | 8:27 | 8:52 | 25 | 23.00 | 47.00 | 24.00 | Y |

*If two consecutive measurements show that six inches of water seeps away in less than 25 minutes, the test shall be run for an additional hour with measurements taken every 10 minutes. Other wise, pre-soak (fill) overnight. Obtain at least twelve measurements per hole over at least six hours (approximately 30 minute intervals) with a precision of at least 0.25".

| Trial No. | Start Time | Stop Time | $\Delta t$ Time Interval (min.) | $D_o$ Initial Depth to Water (in.) | $D_f$ Final Depth to Water (in.) | $\Delta D$ Change in Water Level (in.) | Percolation Rate (min./in.) |
|---|---|---|---|---|---|---|---|
| 1 | 10:22 | 10:32 | 10 | 24.75" | 48.00 | 23.75" | 0.42 |
| 2 | 10:34 | 10:44 | 10 | 23.50" | 45.25 | 21.75" | 0.46 |
| 3 | 10:46 | 10:56 | 10 | 21.75" | 42.50 | 20.75" | 0.48 |
| 4 | 10:59 | 11:09 | 10 | 22.00" | 40.50 | 18.50" | 0.54 |
| 5 | 11:12 | 11:22 | 10 | 21.00 | 39.50 | 18.50" | 0.54 |
| 6 | 11:24 | 11:34 | 10 | 19.75" | 38.00 | 18.25" | 0.55 |
| 7 | | | | | | | |
| 8 | | | | | | | |
| 9 | | | | | | | |
| 10 | | | | | | | |
| 11 | | | | | | | |
| 12 | | | | | | | |
| 13 | | | | | | | |
| 14 | | | | | | | |
| 15 | | | | | | | |

18.25" x 6 = 109.5"

COMMENTS:

K= 8.23 in/hr

Table 5 – Sample Test Data Form for Percolation Test

Basin 2B **Percolation Test Data Sheet**

| Project: | Ocean Breeze | Project No: | 6960-A12 | Date: | 1-25-20 |
|---|---|---|---|---|---|
| Test Hole No: | TB-106 | Tested By: | Matt S. | | |
| Depth of Test Hole, $D_T$: | 55" | USCS Soil Classification: | | | |
| Test Hole Dimensions (inches) | | | Length | Width | |
| Diameter (if round)= | 8" | Sides (if rectangular)= | | | |

Sandy Soil Criteria Test*

| Trial No. | Start Time | Stop Time | Time Interval, (min.) | Initial Depth to Water (in.) | Final Depth to Water (in.) | Change in Water Level (in.) | Greater than or Equal to 6"? (y/n) |
|---|---|---|---|---|---|---|---|
| 1 | 8:01 | 8:26 | 25 | 17.50" | 43.00 | 24.50 | Y |
| 2 | 8:28 | 8:53 | 25 | 17.00 | 40.00 | 23.00 | Y |

*If two consecutive measurements show that six inches of water seeps away in less than 25 minutes, the test shall be run for an additional hour with measurements taken every 10 minutes. Other wise, pre-soak (fill) overnight. Obtain at least twelve measurements per hole over at least six hours (approximately 30 minute intervals) with a precision of at least 0.25".

| Trial No. | Start Time | Stop Time | $\Delta t$ Time Interval (min.) | $D_o$ Initial Depth to Water (in.) | $D_f$ Final Depth to Water (in.) | $\Delta D$ Change in Water Level (in.) | Percolation Rate (min./in.) |
|---|---|---|---|---|---|---|---|
| 1 | 10:22 | 10:32 | 10 | 18.50" | 40.50 | 22.00" | 0.45 |
| 2 | 10:34 | 10:44 | 10 | 16.75" | 37.25 | 20.50" | 0.49 |
| 3 | 10:46 | 10:56 | 10 | 17.50" | 36.25" | 18.75" | 0.53 |
| 4 | 10:59 | 11:09 | 10 | 16.00" | 34.25" | 18.25" | 0.55 |
| 5 | 11:12 | 11:22 | 10 | 14.50" | 33.00" | 18.50 | 0.54 |
| 6 | 11:24 | 11:34 | 10 | 16.00" | 33.50 | 17.50 | 0.57 |
| 7 | | | | | | | |
| 8 | | | | | | | |
| 9 | | | | | | | |
| 10 | | | | | | | |
| 11 | | | | | | | |
| 12 | | | | | | | |
| 13 | | | | | | | |
| 14 | | | | | | | |
| 15 | | | | | | | |

17.50 x6=
105

COMMENTS:

K= 6.51 in/hr

Table 5 – Sample Test Data Form for Percolation Test

From: Appendix D- Approved Infiltration Rate Assessment Methods

**Basin Name** 2C
**Assumed Infl. Bot. = ±** 187.8 **ft. elv, GW elv=** <184.0 **ft, Cut/Fill** Cut
**USDA Soil** Visalia Sandy Loam
**HSG =** A **, Ksat: narrative (& in/hr)** High, 1.98 - 5.95 in/hr
**Geologic Unit:** Qal

**Table D.1-1: Considerations for Geotechnical Analysis of Infiltration Restrictions**

| Restriction Element | | Is Element Applicable? (Yes/No) |
|---|---|---|
| Mandatory Considerations | BMP is within 100' of Contaminated Soils | NO |
| | BMP is within 100' of Industrial Activities Lacking Source Control | NO |
| | BMP is within 100' of Well/Groundwater Basin | YES |
| | BMP is within 50' of Septic Tanks/Leach Fields | NO |
| | BMP is within 10' of Structures/Tanks/Walls | NO |
| | BMP is within 10' of Sewer Utilities | NO |
| | BMP is within 10' of Groundwater Table | YES |
| | BMP is within Hydric Soils | NO |
| | BMP is within Highly Liquefiable Soils and has Connectivity to Structures | YES |
| | BMP is within 1.5 Times the Height of Adjacent Steep Slopes (≥25%) | NO |
| | County Staff has Assigned "Restricted" Infiltration Category | |
| Optional Considerations | BMP is within Predominantly Type D Soil | NO |
| | BMP is within 10' of Property Line | NO |
| | BMP is within Fill Depths of ≥5' (Existing or Proposed) | YES |
| | BMP is within 10' of Underground Utilities | NO |
| | BMP is within 250' of Ephemeral Stream | NO |
| | Other (Provide detailed geotechnical support) BMP within 10' of Bedrock/Obstruction | |
| Result | Based on examination of the best available information, **I have not identified any restrictions above.** | **Unrestricted** |
| | Based on examination of the best available information, **I have identified one or more restrictions above.** | **X Restricted** |

**Table D.2-1: Elements for Determination of Design Infiltration Rates**

| Item | | Value | Unit |
|---|---|---|---|
| Initial Infiltration Rate: Identify per Section D.2.1 in/hr | (33 + 19.5)/2 = | 26.25 | in/hr |
| Corrected Infiltration Rate: Identify per Section D.2.2 in/hr | | 1.340 | in/hr |
| Safety Factor: Identify per Section D.2.3 unitless | | Min 2.0 | unitless |
| Design Infiltration Rate: Corrected Infiltration Rate ÷ Safety Factor in/hr | | 0.670 | in/hr |

Using USDA maps, if NRCS soil type present within a proposed BMP location, Default design infiltration rates (in/hr) for each NRCS soil type are: A=0.300, B=0.200, C=0.100, D=0.025, Restricted=0.000. Use of these default design infiltration rates does not require application of any correction factors or safety factors.

**Table D.2-3: Determination of Safety Factor**

| Consideration | | Assigned Weight (w) | Factor Value (v) | Product (p) p = w x v |
|---|---|---|---|---|
| Suitability Assessment (A) | Infiltration Testing Method | 0.25 | Refer to Table D.2-4 | 2 x 0.25 |
| | Soil Texture Class | 0.25 | | 1 x 0.25 |
| | Soil Variability | 0.25 | | 2 x 0.25 |
| | Depth to Groundwater/Obstruction | 0.25 | | 2 x 0.25 |
| | Suitability Assessment Safety Factor, $S_A = \Sigma p$ | | | 1.50 |
| Design (B) | Pretreatment | 0.50 | Refer to Table D.2-4 | |
| | Resiliency | 0.25 | | |
| | Compaction | 0.25 | | |
| | Design Safety Factor, $S_B = \Sigma p$ | | | |
| Safety Factor, $S = S_A \times S_B$ (Must be always greater than or equal to 2) | | | | Min 2.0 |

**GeoSoils, Inc.**

# BORING LOG

*PROJECT:* OCEAN BREEZE
5280 W. Lilac Road, Bonsall

*W.O.* 6960-A12-SC *BORING* IB-129 *SHEET* 1 *OF* 1

*DATE EXCAVATED* 2-11-21 *LOGGED BY:* MS *APPROX. ELEV.:* 192'

*SAMPLE METHOD:* BASIN 2C

| Depth (ft.) | Sample: Bulk | Sample: Undisturbed | Sample: Blows/Ft. | USCS Symbol | Dry Unit Wt. (pcf) | Moisture (%) | Saturation (%) | Material Description |
|---|---|---|---|---|---|---|---|---|
| 0 | | | | SM | | | | **COLLUVIUM:** @ 0' SILTY SAND, dark reddish brown, damp to moist, medium dense; fine to medium grain sand. @ 1' As per 0'; light reddish brown. |
| | | | | SP | | | | **ALLUVIUM:** @ 3' Fine SAND, very light olive brown, dry, loose; very fine to medium sand, poorly graded. |
| 5 | | | | | | | | Total Depth = 5' No Groundwater or Caving Encountered Backfilled 2-11-21 |
| 10 | | | | | | | | |
| 15 | | | | | | | | |
| 20 | | | | | | | | |
| 25 | | | | | | | | |
| 30 | | | | | | | | |

▼ *Standard Penetration Test*
⌶ *Undisturbed, Ring Sample*
▽ *Groundwater*
♀ *Seepage*

**GeoSoils, Inc.**

*PLATE* _____

**GeoSoils, Inc.**

# BORING LOG

*PROJECT:* OCEAN BREEZE
5280 W. Lilac Road, Bonsall

*W.O.* 6960-A12-SC *BORING* IB-130 *SHEET* 1 *OF* 1

*DATE EXCAVATED* 2-11-21 *LOGGED BY:* MS *APPROX. ELEV.:* 192'

*SAMPLE METHOD:* BASIN 2C

| Depth (ft.) | Sample: Bulk | Sample: Undisturbed | Sample: Blows/Ft. | USCS Symbol | Dry Unit Wt. (pcf) | Moisture (%) | Saturation (%) | Material Description |
|---|---|---|---|---|---|---|---|---|
| 0 | | | | SM | | | | **COLLUVIUM:** @ 0' SILTY/CLAYEY SAND, dark brown to dark reddish brown, damp to moist, medium dense. @ 1' As per 0'; reddish brown to light reddish brown. |
| | | | | SP | | | | **ALLUVIUM:** @ 3½' SAND with trace SILT, light olive brown, damp, loose; fine to medium grain sand, poorly graded. |
| 5 | | | | | | | | Total Depth = 5' No Groundwater or Caving Encountered. Backfilled 2-11-21 |
| 10 | | | | | | | | |
| 15 | | | | | | | | |
| 20 | | | | | | | | |
| 25 | | | | | | | | |
| 30 | | | | | | | | |

▼ *Standard Penetration Test*
⌶ *Undisturbed, Ring Sample*
▽ *Groundwater*
♀ *Seepage*

**GeoSoils, Inc.**

*PLATE* _____

**GeoSoils, Inc.**

# BORING LOG

*PROJECT:* OCEAN BREEZE
5280 W. Lilac Road, Bonsall

*W.O.* 6960-A12-SC *BORING* GW-26 *SHEET* 1 *OF* 1

*DATE EXCAVATED* 2-11-21 *LOGGED BY:* MS *APPROX. ELEV.:* 190'

*SAMPLE METHOD:* BASIN 2C

| Depth (ft.) | Sample: Bulk | Sample: Undisturbed | Sample: Blows/Ft. | USCS Symbol | Dry Unit Wt. (pcf) | Moisture (%) | Saturation (%) | Material Description |
|---|---|---|---|---|---|---|---|---|
| 0 | | | | SM | | | | **COLLUVIUM:** @ 0' SILTY SAND, dark brown, damp, medium dense; fine to medium grain sand. |
| 5 | | | | SP | | | | **ALLUVIUM:** @ 4' SAND, light grayish brown, dry, loose; very fine to medium grain sand, poorly graded. |
| 10 | | | | | | | | @ 9' As per 4'; olive brown. |
| 15 | | | | ML | | | | @ 12' As per 9'; very fine SAND with SILT, olive brown and grayish brown, wet. |
| | | | | | | | | Total Depth = 15'<br>Groundwater Stabilized @ 14'<br>Cave In @ 14½'<br>Backfilled 2-11-21 |
| 20 | | | | | | | | |
| 25 | | | | | | | | |
| 30 | | | | | | | | |

*Standard Penetration Test*
*Undisturbed, Ring Sample*
*Groundwater*
*Seepage*

**GeoSoils, Inc.**

*PLATE* _____

Basin 2C

## Percolation Test Data Sheet

| | | | | | |
|---|---|---|---|---|---|
| Project: | Ocean Breeze | Project No: | 6960-A12 | Date: | 2-12-21 |
| Test Hole No: | TB-129 | Tested By: | Matt Smelski | | |
| Depth of Test Hole, $D_T$: | 53.00" | USCS Soil Classification: | | | |
| Test Hole Dimensions (inches) | | | Length | Width | |
| Diameter (if round)= | 8 inches | Sides (if rectangular)= | | | |

Sandy Soil Criteria Test*

| Trial No. | Start Time | Stop Time | Time Interval, (min.) | Initial Depth to Water (in.) | Final Depth to Water (in.) | Change in Water Level (in.) | Greater than or Equal to 6"? (y/n) |
|---|---|---|---|---|---|---|---|
| 1 | 8:02 | 8:27 | 25 | 14.00 | 47.00 | 33.00 | Y |
| 2 | 8:27 | 8:52 | 25 | 13.00 | 38.00 | 25.00 | Y |

*If two consecutive measurements show that six inches of water seeps away in less than 25 minutes, the test shall be run for an additional hour with measurements taken every 10 minutes. Other wise, pre-soak (fill) overnight. Obtain at least twelve measurements per hole over at least six hours (approximately 30 minute intervals) with a precision of at least 0.25".

| Trial No. | Start Time | Stop Time | $\Delta t$ Time Interval (min.) | $D_o$ Initial Depth to Water (in.) | $D_f$ Final Depth to Water (in.) | $\Delta D$ Change in Water Level (in.) | Percolation Rate (min./in.) |
|---|---|---|---|---|---|---|---|
| 1 | 10:18 | 10:28 | 10 | 14.50 | 33.50" | 19.00" | 0.53 |
| 2 | 10:29 | 10:39 | 10 | 13.50 | 25.25" | 11.75" | 0.85 |
| 3 | 10:40 | 10:50 | 10 | 13.00" | 21.00" | 8.00 | 1.25 |
| 4 | 10:51 | 11:01 | 10 | 13.00" | 20.50 | 7.50 | 1.33 |
| 5 | 11:02 | 11:12 | 10 | 13.50" | 19.25 | 5.75 | 1.74 |
| 6 | 11:13 | 11:23 | 10 | 12.75" | 18.25 | 5.50 | 1.82 |
| 7 | | | | | | | |
| 8 | | | | | | | |
| 9 | | | | | | | |
| 10 | | | | | | | |
| 11 | | | | | | | |
| 12 | | | | | | | |
| 13 | | | | | | | |
| 14 | | | | | | | |
| 15 | | | | | | | |

33 in/hr

COMMENTS:

Table 5 – Sample Test Data Form for Percolation Test

BASIN 2C

## Percolation Test Data Sheet

| | | | | | |
|---|---|---|---|---|---|
| Project: | Ocean Breeze | Project No: | 6960-A12 | Date: | 2-12-21 |
| Test Hole No: | TB-130 | Tested By: | Matt Smelski | | |
| Depth of Test Hole, $D_T$: | 53.00" | USCS Soil Classification: | | | |
| Test Hole Dimensions (inches) | | | Length | Width | |
| Diameter (if round)= | 8 inches | Sides (if rectangular)= | | | |

Sandy Soil Criteria Test*

| Trial No. | Start Time | Stop Time | Time Interval, (min.) | Initial Depth to Water (in.) | Final Depth to Water (in.) | Change in Water Level (in.) | Greater than or Equal to 6"? (y/n) |
|---|---|---|---|---|---|---|---|
| 1 | 8:03 | 8:28 | 10 | 17.00 | 27.00 | 10.00 | Y |
| 2 | 8:28 | 8:53 | 10 | 15.00 | 22.00 | 7.00 | Y |

*If two consecutive measurements show that six inches of water seeps away in less than 25 minutes, the test shall be run for an additional hour with measurements taken every 10 minutes. Other wise, pre-soak (fill) overnight. Obtain at least twelve measurements per hole over at least six hours (approximately 30 minute intervals) with a precision of at least 0.25".

| Trial No. | Start Time | Stop Time | $\Delta t$ Time Interval (min.) | $D_o$ Initial Depth to Water (in.) | $D_f$ Final Depth to Water (in.) | $\Delta D$ Change in Water Level (in.) | Percolation Rate (min./in.) |
|---|---|---|---|---|---|---|---|
| 1 | 10:19 | 10:29 | 10 | 16.00" | 21.50 | 5.50 | 1.82 |
| 2 | 10:30 | 10:40 | 10 | 16.25" | 21.00 | 4.75" | 2.11 |
| 3 | 10:41 | 10:51 | 10 | 15.50" | 19.25" | 3.75" | 2.67 |
| 4 | 10:51 | 11:01 | 10 | 16.25" | 19.50 | 3.25 | 3.08 |
| 5 | 11:03 | 11:13 | 10 | 15.00" | 18.50 | 3.50 | 2.86 |
| 6 | 11:13 | 11:23 | 10 | 14.75" | 18.00 | 3.25 | 3.08 |
| 7 | | | | | | | |
| 8 | | | | | | | |
| 9 | | | | | | | |
| 10 | | | | | | | |
| 11 | | | | | | | |
| 12 | | | | | | | |
| 13 | | | | | | | |
| 14 | | | | | | | |
| 15 | | | | | | | |

19.50 in/hr

COMMENTS:

Table 5 – Sample Test Data Form for Percolation Test

County of San Diego

From: Appendix D- Approved Infiltration Rate Assessment Methods

**Basin Name** 2D
**Assumed Infl. Bot. = ±** 190.2 **ft. elv, GW elv=** 179.0 **ft, Cut/Fill** Cut
**USDA Soil** Visalia Sandy Loam
**HSG =** A **, Ksat: narrative (& in/hr)** high, 1.98 - 5.95 in/hr
**Geologic Unit:** Qal

**Table D.1-1: Considerations for Geotechnical Analysis of Infiltration Restrictions**

| Restriction Element | | Is Element Applicable? (Yes/No) |
|---|---|---|
| Mandatory Considerations | BMP is within 100' of Contaminated Soils | NO |
| | BMP is within 100' of Industrial Activities Lacking Source Control | NO |
| | BMP is within 100' of Well/Groundwater Basin | YES |
| | BMP is within 50' of Septic Tanks/Leach Fields | NO |
| | BMP is within 10' of Structures/Tanks/Walls | NO |
| | BMP is within 10' of Sewer Utilities | NO |
| | BMP is within 10' of Groundwater Table | NO |
| | BMP is within Hydric Soils | NO |
| | BMP is within Highly Liquefiable Soils and has Connectivity to Structures | YES |
| | BMP is within 1.5 Times the Height of Adjacent Steep Slopes (≥25%) | NO |
| | County Staff has Assigned "Restricted" Infiltration Category | |
| Optional Considerations | BMP is within Predominantly Type D Soil | NO |
| | BMP is within 10' of Property Line | NO |
| | BMP is within Fill Depths of ≥5' (Existing or Proposed) | NO |
| | BMP is within 10' of Underground Utilities | NO |
| | BMP is within 250' of Ephemeral Stream | NO |
| | Other (Provide detailed geotechnical support) BMP within 10' of Bedrock/Obstruction | NO |
| Result | Based on examination of the best available information, **I have not identified any restrictions above.** | **Unrestricted** |
| | Based on examination of the best available information, **I have identified one or more restrictions above.** | **X Restricted** |

**Table D.2-1: Elements for Determination of Design Infiltration Rates**

| Item | | Value | Unit |
|---|---|---|---|
| Initial Infiltration Rate: Identify per Section D.2.1 in/hr | (69+61.5)/2 = | 65.25 | in/hr |
| Corrected Infiltration Rate: Identify per Section D.2.2 in/hr | | 3.888 | in/hr |
| Safety Factor: Identify per Section D.2.3 unitless | | Min 2.0 | unitless |
| Design Infiltration Rate: Corrected Infiltration Rate ÷ Safety Factor in/hr | | 1.944 | in/hr |

Using USDA maps, if NRCS soil type present within a proposed BMP location, Default design infiltration rates (in/hr) for each NRCS soil type are: A=0.300, B=0.200, C=0.100, D=0.025, Restricted=0.000. Use of these default design infiltration rates does not require application of any correction factors or safety factors.

**Table D.2-3: Determination of Safety Factor**

| Consideration | | Assigned Weight (w) | Factor Value (v) | Product (p) p = w x v |
|---|---|---|---|---|
| Suitability Assessment (A) | Infiltration Testing Method | 0.25 | Refer to Table D.2-4 | 2 x 0.25 |
| | Soil Texture Class | 0.25 | | 1 x 0.25 |
| | Soil Variability | 0.25 | | 2 x 0.25 |
| | Depth to Groundwater/Obstruction | 0.25 | | 1 x 0.25 |
| | Suitability Assessment Safety Factor, $S_A = \Sigma p$ | | | 1.50 |
| Design (B) | Pretreatment | 0.50 | Refer to Table D.2-4 | |
| | Resiliency | 0.25 | | |
| | Compaction | 0.25 | | |
| | Design Safety Factor, $S_B = \Sigma p$ | | | |
| Safety Factor, $S = S_A \times S_B$ (Must be always greater than or equal to 2) | | | | Min 2.0 |

**GeoSoils, Inc.**

# BORING LOG

*PROJECT:* OCEAN BREEZE
5280 W. Lilac Road, Bonsall

*W.O.* 6960-A12-SC *BORING* IB-131 *SHEET* 1 *OF* 1

*DATE EXCAVATED* 2-11-21 *LOGGED BY:* MS *APPROX. ELEV.:* 195'

*SAMPLE METHOD:* BASIN 2D

| Depth (ft.) | Sample: Bulk | Sample: Undisturbed | Sample: Blows/Ft. | USCS Symbol | Dry Unit Wt. (pcf) | Moisture (%) | Saturation (%) | Material Description |
|---|---|---|---|---|---|---|---|---|
| 0 | | | | SM | | | | **COLLUVIUM:** @ 0' SILTY SAND, dark brown, moist, medium dense; fine to coarse grain sand. |
| | | | | SP | | | | **ALLUVIUM:** @ 3' SAND, olive brown and yellowish brown, damp, loose; fine to medium grain sand, poorly graded. |
| 5 | | | | | | | | Total Depth = 5'<br>No Groundwater or Caving Encountered<br>Backfilled 2-11-21 |
| 10 | | | | | | | | |
| 15 | | | | | | | | |
| 20 | | | | | | | | |
| 25 | | | | | | | | |
| 30 | | | | | | | | |

▼ *Standard Penetration Test*
⌶ *Undisturbed, Ring Sample*
▽ *Groundwater*
♀ *Seepage*

**GeoSoils, Inc.**

*PLATE* _____

**GeoSoils, Inc.**

# BORING LOG

*PROJECT:* OCEAN BREEZE
5280 W. Lilac Road, Bonsall

*W.O.* 6960-A12-SC *BORING* IB-132 *SHEET* 1 *OF* 1

*DATE EXCAVATED* 2-11-21 *LOGGED BY:* MS *APPROX. ELEV.:* 195'

*SAMPLE METHOD:* BASIN 2D

| Depth (ft.) | Sample: Bulk | Sample: Undisturbed | Sample: Blows/Ft. | USCS Symbol | Dry Unit Wt. (pcf) | Moisture (%) | Saturation (%) | Material Description |
|---|---|---|---|---|---|---|---|---|
| 0 | | | | SM | | | | **COLLUVIUM:** @ 0' SILTY SAND, dark brown and dark gray, moist, medium dense; fine to medium grain sand. |
| | | | | SP | | | | **ALLUVIUM:** @ 3' SAND, dusky yellowish brown, damp, loose to medium dense; fine to coarse grain sand, poorly graded. |
| 5 | | | | | | | | Total Depth = 5'<br>No Groundwater or Caving Encountered<br>Backfilled 2-11-21 |
| 10 | | | | | | | | |
| 15 | | | | | | | | |
| 20 | | | | | | | | |
| 25 | | | | | | | | |
| 30 | | | | | | | | |

▼ *Standard Penetration Test*
⌶ *Undisturbed, Ring Sample*
▽ *Groundwater*
♀ *Seepage*

**GeoSoils, Inc.**

*PLATE* _____

**GeoSoils, Inc.**

# BORING LOG

*PROJECT:* OCEAN BREEZE
5280 W. Lilac Road, Bonsall

*W.O.* 6960-A12-SC *BORING* GW-27 *SHEET* 1 *OF* 1

*DATE EXCAVATED* 2-11-21 *LOGGED BY:* MS *APPROX. ELEV.:* 194'

*SAMPLE METHOD:* BASIN 2D

| Depth (ft.) | Sample: Bulk | Sample: Undisturbed | Sample: Blows/Ft. | USCS Symbol | Dry Unit Wt. (pcf) | Moisture (%) | Saturation (%) | Material Description |
|---|---|---|---|---|---|---|---|---|
| 0 | | | | SM | | | | **COLLUVIUM:** @ 0' SILTY SAND, dark brown, to dark reddish brown, moist, medium dense. @ 1' As per 0'; dark olive brown and dark brown. |
| 5 | | | | SP | | | | **ALLUVIUM:** @ 3½' SAND, light yellowish brown and olive, dry, loose; fine to medium grain sand, poorly graded. |
| | | | | SP | | | | @ 7' As per 3½'; very fine sand, yellowish brown, medium dense. |
| 10 | | | | SP | | | | @ 10' As per 7'; SAND, olive brown, fine to medium grain sand. |
| | | | | ML | | | | @ 12' Fine SAND with SILT, dark grayish brown, moist, medium dense; poorly graded. |
| 15 | | | | | | | | Total Depth = 15' No Groundwater Encountered Cave In @ 14' Backfilled 2-11-21 |
| 20 | | | | | | | | |
| 25 | | | | | | | | |
| 30 | | | | | | | | |

▼ *Standard Penetration Test*
⌶ *Undisturbed, Ring Sample*
*Groundwater*
*Seepage*

Basin 2D

## Percolation Test Data Sheet

| | | | | | |
|---|---|---|---|---|---|
| Project: | Ocean Breeze | Project No: | 6960-A12 | Date: | 2-12-21 |
| Test Hole No: | TB-131 | Tested By: | Matt Smelski | | |
| Depth of Test Hole, $D_T$: | 52.50" | USCS Soil Classification: | | | |
| Test Hole Dimensions (inches) | | | Length | Width | |
| Diameter (if round)= | 8 inches | Sides (if rectangular)= | | | |

T.O.P

Sandy Soil Criteria Test*

| Trial No. | Start Time | Stop Time | Time Interval, (min.) | Initial Depth to Water (in.) | Final Depth to Water (in.) | Change in Water Level (in.) | Greater than or Equal to 6"? (y/n) |
|---|---|---|---|---|---|---|---|
| 1 | 8:04 | 8:29 | 25 | 18.00 | 39.50 | 21.50 | Y |
| 2 | 8:29 | 8:54 | 25 | 19.00 | 37.60 | 18.60 | Y |

*If two consecutive measurements show that six inches of water seeps away in less than 25 minutes, the test shall be run for an additional hour with measurements taken every 20 minutes. Other wise, pre-soak (fill) overnight. Obtain at least twelve measurements per hole over at least six hours (approximately 30-minute intervals) with a precision of at least 0.25".

| Trial No. | Start Time | Stop Time | $\Delta t$ Time Interval (min.) | $D_o$ Initial Depth to Water (in.) | $D_f$ Final Depth to Water (in.) | $\Delta D$ Change in Water Level (in.) | Percolation Rate (min./in.) |
|---|---|---|---|---|---|---|---|
| 1 | 12:03 | 12:13 | 10 | 22.00 | 38.25 | 16.25 | 0.62 |
| 2 | 12:14 | 12:24 | 10 | 18.00 | 33.25 | 15.25 | 0.66 |
| 3 | 12:25 | 12:35 | 10 | 16.50 | 29.50 | 13.00 | 0.77 |
| 4 | 12:36 | 12:46 | 10 | 17.00 | 28.75 | 11.75 | 0.85 |
| 5 | 12:47 | 12:57 | 10 | 17.25 | 29.00 | 11.75 | 0.85 |
| 6 | 12:58 | 1:08 | 10 | 17.00 | 28.50 | 11.50 | 0.87 |
| 7 | | | | | | | |
| 8 | | | | | | | |
| 9 | | | | | | | |
| 10 | | | | | | | |
| 11 | | | | | | | |
| 12 | | | | | | | |
| 13 | | | | | | | |
| 14 | | | | | | | |
| 15 | | | | | | | |

69.00 to/hr

COMMENTS:

Table 5 – Sample Test Data Form for Percolation Test

Basin 2D

## Percolation Test Data Sheet

| | | | | | |
|---|---|---|---|---|---|
| Project: | Ocean Breeze | Project No: | 6960-A12 | Date: | 2-12-21 |
| Test Hole No: | TB-132 | Tested By: | Matt Smelski | | |
| Depth of Test Hole, $D_T$: | 51.00 | USCS Soil Classification: | | | |
| Test Hole Dimensions (inches) | | | Length | Width | |
| Diameter (if round)= | 8 inches | Sides (if rectangular)= | | | |

Sandy Soil Criteria Test*

| Trial No. | Start Time | Stop Time | Time Interval, (min.) | Initial Depth to Water (in.) | Final Depth to Water (in.) | Change in Water Level (in.) | Greater than or Equal to 6"? (y/n) |
|---|---|---|---|---|---|---|---|
| 1 | 8:05 | 8:30 | 25 | 12.50 | 33.00 | 20.50 | Y |
| 2 | 8:30 | 8:55 | 25 | 12.00 | 30.50 | 18.50 | Y |

*If two consecutive measurements show that six inches of water seeps away in less than 25 minutes, the test shall be run for an additional hour with measurements taken every 10 minutes. Other wise, pre-soak (fill) overnight. Obtain at least twelve measurements per hole over at least six hours (approximately 30 minute intervals) with a precision of at least 0.25".

| Trial No. | Start Time | Stop Time | $\Delta t$ Time Interval (min.) | $D_o$ Initial Depth to Water (in.) | $D_f$ Final Depth to Water (in.) | $\Delta D$ Change in Water Level (in.) | Percolation Rate (min./in.) |
|---|---|---|---|---|---|---|---|
| 1 | 12:05 | 12:15 | 10 | 13.00" | 29.50" | 16.50 | 0.61 |
| 2 | 12:16 | 12:26 | 10 | 10.00" | 24.75 | 14.75 | 0.68 |
| 3 | 12:26 | 12:36 | 10 | 13.00" | 24.75 | 11.75 | 0.85 |
| 4 | 12:37 | 12:47 | 10 | 11.50 | 22.50 | 11.00 | 0.91 |
| 5 | 12:48 | 12:58 | 10 | 10.00 | 20.75 | 10.75 | 0.93 |
| 6 | 12:59 | 1:09 | 10 | 12.00 | 22.25 | 10.25 | 0.98 |
| 7 | | | | | | | |
| 8 | | | | | | | |
| 9 | | | | | | | |
| 10 | | | | | | | |
| 11 | | | | | | | |
| 12 | | | | | | | |
| 13 | | | | | | | |
| 14 | | | | | | | |
| 15 | | | | | | | |

61.50 in/hr

COMMENTS:

Table 5 – Sample Test Data Form for Percolation Test

County of San Diego

From: Appendix D- Approved Infiltration Rate Assessment Methods

**Basin Name** 2E
**Assumed Infl. Bot. = ±** 192.6 **ft. elv, GW elv=** <181.0 **ft, Cut/Fill** Cut
**USDA Soil** Visalia Sandy Loam
**HSG =** A **, Ksat: narrative (& in/hr)** high, 1.98 - 5.95 in/hr
**Geologic Unit:** Qal

**Table D.1-1: Considerations for Geotechnical Analysis of Infiltration Restrictions**

| Restriction Element | | Is Element Applicable? (Yes/No) |
|---|---|---|
| Mandatory Considerations | BMP is within 100' of Contaminated Soils | NO |
| | BMP is within 100' of Industrial Activities Lacking Source Control | NO |
| | BMP is within 100' of Well/Groundwater Basin | YES |
| | BMP is within 50' of Septic Tanks/Leach Fields | NO |
| | BMP is within 10' of Structures/Tanks/Walls | NO |
| | BMP is within 10' of Sewer Utilities | NO |
| | BMP is within 10' of Groundwater Table | NO |
| | BMP is within Hydric Soils | NO |
| | BMP is within Highly Liquefiable Soils and has Connectivity to Structures | YES |
| | BMP is within 1.5 Times the Height of Adjacent Steep Slopes (≥25%) | NO |
| | County Staff has Assigned "Restricted" Infiltration Category | |
| Optional Considerations | BMP is within Predominantly Type D Soil | NO |
| | BMP is within 10' of Property Line | NO |
| | BMP is within Fill Depths of ≥5' (Existing or Proposed) | NO |
| | BMP is within 10' of Underground Utilities | NO |
| | BMP is within 250' of Ephemeral Stream | NO |
| | Other (Provide detailed geotechnical support) BMP within 10' of Bedrock/Obstruction | NO |
| Result | Based on examination of the best available information, **I have not identified any restrictions above.** | **Unrestricted** |
| | Based on examination of the best available information, **I have identified one or more restrictions above.** | X **Restricted** |

**Table D.2-1: Elements for Determination of Design Infiltration Rates**

| Item | | Value | Unit |
|---|---|---|---|
| Initial Infiltration Rate: Identify per Section D.2.1 in/hr | (90+81)/2 = | 85.50 | in/hr |
| Corrected Infiltration Rate: Identify per Section D.2.2 in/hr | | 7.783 | in/hr |
| Safety Factor: Identify per Section D.2.3 unitless | | Min 2.0 | unitless |
| Design Infiltration Rate: Corrected Infiltration Rate ÷ Safety Factor in/hr | | 2.392 | in/hr |

Using USDA maps, if NRCS soil type present within a proposed BMP location, Default design infiltration rates (in/hr) for each NRCS soil type are: A=0.300, B=0.200, C=0.100, D=0.025, Restricted=0.000. Use of these default design infiltration rates does not require application of any correction factors or safety factors.

**Table D.2-3: Determination of Safety Factor**

| Consideration | | Assigned Weight (w) | Factor Value (v) | Product (p) p = w x v |
|---|---|---|---|---|
| Suitability Assessment (A) | Infiltration Testing Method | 0.25 | Refer to Table D.2-4 | 2 x 0.25 |
| | Soil Texture Class | 0.25 | | 1 x 0.25 |
| | Soil Variability | 0.25 | | 2 x 0.25 |
| | Depth to Groundwater/Obstruction | 0.25 | | 1 x 0.25 |
| | Suitability Assessment Safety Factor, $S_A = \Sigma p$ | | | 1.50 |
| Design (B) | Pretreatment | 0.50 | Refer to Table D.2-4 | |
| | Resiliency | 0.25 | | |
| | Compaction | 0.25 | | |
| | Design Safety Factor, $S_B = \Sigma p$ | | | |
| Safety Factor, $S = S_A \times S_B$ (Must be always greater than or equal to 2) | | | | Min 2.0 |

**GeoSoils, Inc.**

# BORING LOG

*PROJECT:* OCEAN BREEZE
5280 W. Lilac Road, Bonsall

*W.O.* 6960-A12-SC *BORING* IB-133 *SHEET* 1 *OF* 1

*DATE EXCAVATED* 2-11-21 *LOGGED BY:* MS *APPROX. ELEV.:* 198'

*SAMPLE METHOD:* BASIN 2E

| Depth (ft.) | Sample: Bulk | Sample: Undisturbed | Sample: Blows/Ft. | USCS Symbol | Dry Unit Wt. (pcf) | Moisture (%) | Saturation (%) | Material Description |
|---|---|---|---|---|---|---|---|---|
| 0 | | | | SM | | | | **COLLUVIUM:** @ 0' SILTY SAND, dark brown and grayish brown, moist, medium dense; fine to medium grain sand. |
| | | | | SP<br>SW | | | | **ALLUVIUM:** @ 3' SAND, light brown, damp, loose; very fine to medium grain sand, poorly graded. @ 4' SAND, light yellowish brown, damp, loose; fine to very coarse sand, well graded. |
| 5 | | | | | | | | Total Depth = 5'<br>No Groundwater or Caving Encountered<br>Backfilled 2-11-21 |
| 10 | | | | | | | | |
| 15 | | | | | | | | |
| 20 | | | | | | | | |
| 25 | | | | | | | | |
| 30 | | | | | | | | |

▼ *Standard Penetration Test*
⌶ *Undisturbed, Ring Sample*
▽ *Groundwater*
♀ *Seepage*

**GeoSoils, Inc.**

*PLATE* _____

**GeoSoils, Inc.**

# BORING LOG

*PROJECT:* OCEAN BREEZE
5280 W. Lilac Road, Bonsall

*W.O.* 6960-A12-SC *BORING* IB-134 *SHEET* 1 *OF* 1

*DATE EXCAVATED* 2-11-21 *LOGGED BY:* MS *APPROX. ELEV.:* 198'

*SAMPLE METHOD:* BASIN 2E

| Depth (ft.) | Sample: Bulk | Sample: Undisturbed | Sample: Blows/Ft. | USCS Symbol | Dry Unit Wt. (pcf) | Moisture (%) | Saturation (%) | Material Description |
|---|---|---|---|---|---|---|---|---|
| 0 | | | | SM | | | | **COLLUVIUM:** @ 0' SILTY SAND, dark brown and grayish brown, moist, medium dense. |
| | | | | SP | | | | **ALLUVIUM:** @ 4' SAND, yellowish brown, damp, loose; very fine to medium grain sand, poorly graded. |
| 5 | | | | | | | | Total Depth = 5'<br>No Groundwater or Caving Encountered<br>Backfilled 2-11-21 |
| 10 | | | | | | | | |
| 15 | | | | | | | | |
| 20 | | | | | | | | |
| 25 | | | | | | | | |
| 30 | | | | | | | | |

*Standard Penetration Test*
*Undisturbed, Ring Sample*
*Groundwater*
*Seepage*

**GeoSoils, Inc.**

*PLATE* _____

**GeoSoils, Inc.**

# BORING LOG

*PROJECT:* OCEAN BREEZE
5280 W. Lilac Road, Bonsall

*W.O.* 6960-A12-SC *BORING* GW-28 *SHEET* 1 *OF* 1

*DATE EXCAVATED* 2-11-21 *LOGGED BY:* MS *APPROX. ELEV.:* 196'

*SAMPLE METHOD:* BASIN 2E

| Depth (ft.) | Sample: Bulk | Sample: Undisturbed | Sample: Blows/Ft. | USCS Symbol | Dry Unit Wt. (pcf) | Moisture (%) | Saturation (%) | Material Description |
|---|---|---|---|---|---|---|---|---|
| 0 | | | | SM | | | | **COLLUVIUM:** @ 0' SILTY SAND, dark brown, moist, medium dense; fine to medium grain sand. |
| 5 | | | | SP | | | | **ALLUVIUM:** @ 3' SAND, dusky yellowish brown, damp to moist, loose; fine to medium grain sand, poorly graded. |
| | | | | SP | | | | @ 5' As per 3'; very light olive brown, dry. |
| | | | | SP | | | | @ 7' As per 5'; olive brown, moist. |
| 10 | | | | SP | | | | @ 10' Very fine SAND, olive brown, damp, loose; very fine to fine sand with silt, poorly graded. |
| | | | | ML | | | | @ 12' SILTY SAND, dark grayish brown, moist to wet, medium dense. |
| 15 | | | | | | | | Total Depth = 15'<br>No Groundwater Encountered<br>Cave In @ 14'<br>Backfilled 2-11-21 |
| 20 | | | | | | | | |
| 25 | | | | | | | | |
| 30 | | | | | | | | |

▼ *Standard Penetration Test*
⌶ *Undisturbed, Ring Sample*
▽ *Groundwater*
♀ *Seepage*

**GeoSoils, Inc.**

*PLATE* _____

BASIN 2E

## Percolation Test Data Sheet

| | | | | | |
|---|---|---|---|---|---|
| Project: | Ocean Breeze | Project No: | 6960-A12 | Date: | 2-12-21 |
| Test Hole No: | IB-133 | Tested By: | Matt Smelski | | |
| Depth of Test Hole, $D_T$: | 53.50 | USCS Soil Classification: | | | |
| Test Hole Dimensions (inches) | | | Length | Width | |
| Diameter (if round)= | 8 inches | Sides (if rectangular)= | | | |

Sandy Soil Criteria Test*

| Trial No. | Start Time | Stop Time | Time Interval, (min.) | Initial Depth to Water (in.) | Final Depth to Water (in.) | Change in Water Level (in.) | Greater than or Equal to 6"? (y/n) |
|---|---|---|---|---|---|---|---|
| 1 | 8:06 | 8:31 | 25 | 14.00 | 53.00 | 39.00 | Y |
| 2 | 8:31 | 8:56 | 25 | 13.00 | 53.00 | 38.00 | Y |

*If two consecutive measurements show that six inches of water seeps away in less than 25 minutes, the test shall be run for an additional hour with measurements taken every 10 minutes. Other wise, pre-soak (fill) overnight. Obtain at least twelve measurements per hole over at least six hours (approximately 30 minute intervals) with a precision of at least 0.25".

| Trial No. | Start Time | Stop Time | $\Delta t$ Time Interval (min.) | $D_o$ Initial Depth to Water (in.) | $D_f$ Final Depth to Water (in.) | $\Delta D$ Change in Water Level (in.) | Percolation Rate (min./in.) |
|---|---|---|---|---|---|---|---|
| 1 | 1:19 | 1:29 | 10 | 15.00" | 51.50" | 36.50 | 0.27 |
| 2 | 1:30 | 1:40 | 10 | 13.50 | 34.00 | 20.50 | 0.49 |
| 3 | 1:40 | 1:50 | 10 | 13.25 | 30.50 | 17.25 | 0.58 |
| 4 | 1:51 | 2:01 | 10 | 13.00 | 29.25 | 16.25 | 0.62 |
| 5 | 2:01 | 2:11 | 10 | 14.25 | 30.00" | 15.75 | 0.63 |
| 6 | 2:11 | 2:21 | 10 | 13.50 | 28.50 | 15.00 | 0.67 |
| 7 | | | | | | | |
| 8 | | | | | | | |
| 9 | | | | | | | |
| 10 | | | | | | | |
| 11 | | | | | | | |
| 12 | | | | | | | |
| 13 | | | | | | | |
| 14 | | | | | | | |
| 15 | | | | | | | |

90.00 min/in

COMMENTS:

Table 5 – Sample Test Data Form for Percolation Test

Basin 2E

## Percolation Test Data Sheet

| | | | | | |
|---|---|---|---|---|---|
| Project: | Ocean Breeze | Project No: | 6960-A12 | Date: | 2-12-21 |
| Test Hole No: | TB-134 | Tested By: | Matt Smelski | | |
| Depth of Test Hole, $D_T$: | 55.00" | USCS Soil Classification: | | | |
| Test Hole Dimensions (inches) | | | | Length | Width |
| Diameter (if round)= | 8 inches | Sides (if rectangular)= | | | |

Sandy Soil Criteria Test*

| Trial No. | Start Time | Stop Time | Time Interval, (min.) | Initial Depth to Water (in.) | Final Depth to Water (in.) | Change in Water Level (in.) | Greater than or Equal to 6"? (y/n) |
|---|---|---|---|---|---|---|---|
| 1 | 8:07 | 8:32 | 25 | 13.00 | 41.25 | 28.25 | Y |
| 2 | 8:32 | 8:57 | 25 | 15.00 | 40.50 | 25.50 | Y |

*If two consecutive measurements show that six inches of water seeps away in less than 25 minutes, the test shall be run for an additional hour with measurements taken every 10 minutes. Other wise, pre-soak (fill) overnight. Obtain at least twelve measurements per hole over at least six hours (approximately 30 minute intervals) with a precision of at least 0.25".

| Trial No. | Start Time | Stop Time | $\Delta t$ Time Interval (min.) | $D_o$ Initial Depth to Water (in.) | $D_f$ Final Depth to Water (in.) | $\Delta D$ Change in Water Level (in.) | Percolation Rate (min./in.) |
|---|---|---|---|---|---|---|---|
| 1 | 1:20 | 1:30 | 10 | 15.00 | 37.00" | 22.00" | 0.45 |
| 2 | 1:31 | 1:41 | 10 | 12.00 | 30.00 | 18.00" | 0.56 |
| 3 | 1:41 | 1:51 | 10 | 12.50 | 27.75 | 15.25 | 0.66 |
| 4 | 1:52 | 2:02 | 10 | 13.75 | 28.50 | 14.75 | 0.68 |
| 5 | 2:02 | 2:12 | 10 | 12.50 | 26.75 | 14.25 | 0.70 |
| 6 | 2:13 | 2:23 | 10 | 13.00 | 26.50 | 13.50 | 0.74 |
| 7 | | | | | | | |
| 8 | | | | | | | |
| 9 | | | | | | | |
| 10 | | | | | | | |
| 11 | | | | | | | |
| 12 | | | | | | | |
| 13 | | | | | | | |
| 14 | | | | | | | |
| 15 | | | | | | | |

$1.00 per hr

COMMENTS:

Table 5 – Sample Test Data Form for Percolation Test

From: Appendix D- Approved Infiltration Rate Assessment Methods

**Basin Name** 2F
**Assumed Infl. Bot. = ±** 193.5 **ft. elv, GW elv=** <184.5 **ft, Cut/Fill** Cut
**USDA Soil** Visalia Sandy Loam
**HSG =** A **, Ksat: narrative (& in/hr)** high, 1.98 - 5.95 in/hr
**Geologic Unit:** Qal

**Table D.1-1: Considerations for Geotechnical Analysis of Infiltration Restrictions**

| Restriction Element | | Is Element Applicable? (Yes/No) |
|---|---|---|
| Mandatory Considerations | BMP is within 100' of Contaminated Soils | NO |
| | BMP is within 100' of Industrial Activities Lacking Source Control | NO |
| | BMP is within 100' of Well/Groundwater Basin | YES |
| | BMP is within 50' of Septic Tanks/Leach Fields | NO |
| | BMP is within 10' of Structures/Tanks/Walls | NO |
| | BMP is within 10' of Sewer Utilities | NO |
| | BMP is within 10' of Groundwater Table | YES |
| | BMP is within Hydric Soils | NO |
| | BMP is within Highly Liquefiable Soils and has Connectivity to Structures | YES |
| | BMP is within 1.5 Times the Height of Adjacent Steep Slopes (≥25%) | NO |
| | County Staff has Assigned "Restricted" Infiltration Category | |
| Optional Considerations | BMP is within Predominantly Type D Soil | NO |
| | BMP is within 10' of Property Line | NO |
| | BMP is within Fill Depths of ≥5' (Existing or Proposed) | NO |
| | BMP is within 10' of Underground Utilities | NO |
| | BMP is within 250' of Ephemeral Stream | NO |
| | Other (Provide detailed geotechnical support) BMP within 10' of Bedrock/Obstruction | NO |
| Result | Based on examination of the best available information, **I have not identified any restrictions above.** | **Unrestricted** |
| | Based on examination of the best available information, **I have identified one or more restrictions above.** | **X Restricted** |

**Table D.2-1: Elements for Determination of Design Infiltration Rates**

| Item | | Value | Unit |
|---|---|---|---|
| Initial Infiltration Rate: Identify per Section D.2.1 in/hr | (66+57)/2 = | 61.50 | in/hr |
| Corrected Infiltration Rate: Identify per Section D.2.2 in/hr | | 3.314 | in/hr |
| Safety Factor: Identify per Section D.2.3 unitless | | Min 2.0 | unitless |
| Design Infiltration Rate: Corrected Infiltration Rate ÷ Safety Factor in/hr | | 1.657 | in/hr |

Using USDA maps, if NRCS soil type present within a proposed BMP location, Default design infiltration rates (in/hr) for each NRCS soil type are: A=0.300, B=0.200, C=0.100, D=0.025, Restricted=0.000. Use of these default design infiltration rates does not require application of any correction factors or safety factors.

**Table D.2-3: Determination of Safety Factor**

| Consideration | | Assigned Weight (w) | Factor Value (v) | Product (p) p = w x v |
|---|---|---|---|---|
| Suitability Assessment (A) | Infiltration Testing Method | 0.25 | Refer to Table D.2-4 | 2 x 0.25 |
| | Soil Texture Class | 0.25 | | 1 x 0.25 |
| | Soil Variability | 0.25 | | 2 x 0.25 |
| | Depth to Groundwater/Obstruction | 0.25 | | 2 x 0.25 |
| | Suitability Assessment Safety Factor, $S_A = \Sigma p$ | | | 1.75 |
| Design (B) | Pretreatment | 0.50 | Refer to Table D.2-4 | |
| | Resiliency | 0.25 | | |
| | Compaction | 0.25 | | |
| | Design Safety Factor, $S_B = \Sigma p$ | | | |
| Safety Factor, $S = S_A \times S_B$ (Must be always greater than or equal to 2) | | | | Min 2.0 |

**GeoSoils, Inc.**

# BORING LOG

*PROJECT:* OCEAN BREEZE
5280 W. Lilac Road, Bonsall

*W.O.* 6960-A12-SC *BORING* IB-135 *SHEET* 1 *OF* 1

*DATE EXCAVATED* 2-11-21 *LOGGED BY:* MS *APPROX. ELEV.:* 198'

*SAMPLE METHOD:* BASIN 2F

| Depth (ft.) | Sample: Bulk | Sample: Undisturbed | Sample: Blows/Ft. | USCS Symbol | Dry Unit Wt. (pcf) | Moisture (%) | Saturation (%) | Material Description |
|---|---|---|---|---|---|---|---|---|
| 0 | | | | SM | | | | **COLLUVIUM:** @ 0' SILTY SAND, dark olive brown, damp, loose to medium dense; fien to medium grain sand. |
| | | | | SP | | | | **ALLUVIUM:** @ 3½' SAND, light yellowish brown, dry, loose; very fine to medium grain sand, poorly graded. |
| 5 | | | | | | | | Total Depth = 5'<br>No Groundwater or Caving Encountered<br>Backfilled 2-11-21 |
| 10 | | | | | | | | |
| 15 | | | | | | | | |
| 20 | | | | | | | | |
| 25 | | | | | | | | |
| 30 | | | | | | | | |

▼ *Standard Penetration Test*
⌶ *Undisturbed, Ring Sample*
▽ *Groundwater*
♀ *Seepage*

**GeoSoils, Inc.**

*PLATE* _____

**GeoSoils, Inc.**

# BORING LOG

*PROJECT:* OCEAN BREEZE
5280 W. Lilac Road, Bonsall

*W.O.* 6960-A12-SC *BORING* IB-136 *SHEET* 1 *OF* 1

*DATE EXCAVATED* 2-11-21 *LOGGED BY:* MS *APPROX. ELEV.:* 198'

*SAMPLE METHOD:* BASIN 2F

| Depth (ft.) | Sample: Bulk | Sample: Undisturbed | Sample: Blows/Ft. | USCS Symbol | Dry Unit Wt. (pcf) | Moisture (%) | Saturation (%) | Material Description |
|---|---|---|---|---|---|---|---|---|
| 0 | | | | SM | | | | **COLLUVIUM:** @ 0' SILTY SAND, dark olive brown, damp to moist, medium dense; fine to medium grain sand. |
| 5 | | | | SP | | | | **ALLUVIUM:** @ 3½' SAND, very light yellowish brown, dry, loose; fine to coarse grain sand, poorly graded. |
| | | | | | | | | Total Depth = 5' |
| | | | | | | | | No Groundwater or Caving Encountered |
| | | | | | | | | Backfilled 2-11-21 |
| 10 | | | | | | | | |
| 15 | | | | | | | | |
| 20 | | | | | | | | |
| 25 | | | | | | | | |
| 30 | | | | | | | | |

▼ *Standard Penetration Test*
⌶ *Undisturbed, Ring Sample*
▽ *Groundwater*
♀ *Seepage*

**GeoSoils, Inc.**

*PLATE* _____

**GeoSoils, Inc.**

# BORING LOG

*PROJECT:* OCEAN BREEZE
5280 W. Lilac Road, Bonsall

*W.O.* 6960-A12-SC *BORING* GW-29 *SHEET* 1 *OF* 1

*DATE EXCAVATED* 2-11-21 *LOGGED BY:* MS *APPROX. ELEV.:* 197.5'

*SAMPLE METHOD:* BASIN 2F

| Depth (ft.) | Sample: Bulk | Sample: Undisturbed | Sample: Blows/Ft. | USCS Symbol | Dry Unit Wt. (pcf) | Moisture (%) | Saturation (%) | Material Description |
|---|---|---|---|---|---|---|---|---|
| 0 | | | | SM | | | | **COLLUVIUM:** @ 0' SILTY SAND, dark brown and dark olive brown, damp, medium dense; fine to coarse grain sand. |
| 5 | | | | SP | | | | **ALLUVIUM:** @ 4' SAND, dusky yellowish brown, damp, medium dense; fine to coarse grain sand, poorly graded. |
| 10 | | | | SP | | | | @ 8' As per 4'; dark olive brown, moist; very fine to medium grain sand. |
| | | | | SW | | | | @ 12' As per 8'; light to dark gray, damp to moist; fine to coarse grain sand, well graded. |
| 15 | | | | | | | | Total Depth = 15'<br>Groundwater @ 13'<br>Cave In @ 13'<br>Backfilled 2-11-21 |
| 20 | | | | | | | | |
| 25 | | | | | | | | |
| 30 | | | | | | | | |

*Standard Penetration Test*
*Undisturbed, Ring Sample*
*Groundwater*
*Seepage*

**GeoSoils, Inc.**

*PLATE* _____

Basin 2F **Percolation Test Data Sheet**

| | | | | | |
|---|---|---|---|---|---|
| Project: | Ocean Breeze | Project No: | 6960-A12 | Date: | 2-12-21 |
| Test Hole No: | TB-135 | Tested By: | Matt Smelski | | |
| Depth of Test Hole, $D_T$: | 55.00 | USCS Soil Classification: | | | |
| Test Hole Dimensions (inches) | | | | Length | Width |
| Diameter (if round)= | 8 inches | Sides (if rectangular)= | | | |

Sandy Soil Criteria Test*

| Trial No. | Start Time | Stop Time | Time Interval, (min.) | Initial Depth to Water (in.) | Final Depth to Water (in.) | Change in Water Level (in.) | Greater than or Equal to 6"? (y/n) |
|---|---|---|---|---|---|---|---|
| 1 | 8:08 | 8:33 | 25 | 14.75 | 37.00 | 22.25 | Y |
| 2 | 8:33 | 8:58 | 25 | 14.00 | 33.25 | 19.25 | Y |

*If two consecutive measurements show that six inches of water seeps away in less than 25 minutes, the test shall be run for an additional hour with measurements taken every 10 minutes. Other wise, pre-soak (fill) overnight. Obtain at least twelve measurements per hole over at least six hours (approximately 30 minute intervals) with a precision of at least 0.25".

| Trial No. | Start Time | Stop Time | $\Delta t$ Time Interval (min.) | $D_o$ Initial Depth to Water (in.) | $D_f$ Final Depth to Water (in.) | $\Delta D$ Change in Water Level (in.) | Percolation Rate (min./in.) |
|---|---|---|---|---|---|---|---|
| 1 | 2:41 | 2:51 | 10 | 15.50 | 31.75" | 16.25 | 0.62 |
| 2 | 2:52 | 3:08 | 16 | 14.00 | 28.50" | 14.50 | 0.69 |
| 3 | 3:02 | 3:12 | 16 | 13.25 | 27.00 | 13.75 | 0.72 |
| 4 | 3:13 | 3:23 | 10 | 14.00 | 27.75" | 13.75 | 0.72 |
| 5 | 3:24 | 3:54 | 10 | 14.00 | 26.00 | 12.00 | 0.83 |
| 6 | 3:35 | 3:45 | 10 | 14.50 | 25.50 | 11.00 | 0.91 |
| 7 | | | | | | | |
| 8 | | | | | | | |
| 9 | | | | | | | |
| 10 | | | | | | | |
| 11 | | | | | | | |
| 12 | | | | | | | |
| 13 | | | | | | | |
| 14 | | | | | | | |
| 15 | | | | | | | |

66.00 in/hr

COMMENTS:

Table 5 – Sample Test Data Form for Percolation Test

Basin 2F

## Percolation Test Data Sheet

| | | | | | |
|---|---|---|---|---|---|
| Project: | Ocean Breeze | Project No: | 6960-A12 | Date: | 2-12-21 |
| Test Hole No: | IB-136 | Tested By: | Matt Smelski | | |
| Depth of Test Hole, $D_T$: | 57.00 | USCS Soil Classification: | | | |
| Test Hole Dimensions (inches) | | | Length | Width | |
| Diameter (if round)= | 8 inches | Sides (if rectangular)= | | | |

Sandy Soil Criteria Test*

| Trial No. | Start Time | Stop Time | Time Interval, (min.) | Initial Depth to Water (in.) | Final Depth to Water (in.) | Change in Water Level (in.) | Greater than or Equal to 6"? (y/n) |
|---|---|---|---|---|---|---|---|
| 1 | 8:09 | 8:34 | 25 | 17.00 | 41.00 | 24.00 | Y |
| 2 | 8:34 | 8:59 | 25 | 16.50 | 33.50 | 17.00 | Y |

*If two consecutive measurements show that six inches of water seeps away in less than 25 minutes, the test shall be run for an additional hour with measurements taken every 10 minutes. Other wise, pre-soak (fill) overnight. Obtain at least twelve measurements per hole over at least six hours (approximately 30-minute intervals) with a precision of at least 0.25".

| Trial No. | Start Time | Stop Time | $\Delta t$ Time Interval (min.) | $D_o$ Initial Depth to Water (in.) | $D_f$ Final Depth to Water (in.) | $\Delta D$ Change in Water Level (in.) | Percolation Rate (min./in.) |
|---|---|---|---|---|---|---|---|
| 1 | 2:42 | 2:52 | 10 | 18.00 | 32.00 | 14.00 | 0.71 |
| 2 | 2:53 | 3:03 | 10 | 15.75 | 28.25 | 12.50 | 0.80 |
| 3 | 3:03 | 3:13 | 10 | 16.25 | 28.00 | 11.75 | 0.85 |
| 4 | 3:14 | 3:24 | 10 | 17.00 | 27.75 | 10.75 | 0.93 |
| 5 | 3:25 | 3:35 | 10 | 16.50 | 26.75 | 10.25 | 0.98 |
| 6 | 3:36 | 3:46 | 10 | 17.00" | 26.50 | 9.50 | 1.05 |
| 7 | | | | | | | |
| 8 | | | | | | | |
| 9 | | | | | | | |
| 10 | | | | | | | |
| 11 | | | | | | | |
| 12 | | | | | | | |
| 13 | | | | | | | |
| 14 | | | | | | | |
| 15 | | | | | | | |

57.00 to/ns

COMMENTS:

Table 5 – Sample Test Data Form for Percolation Test

County of San Diego

From: Appendix D- Approved Infiltration Rate Assessment Methods

**Basin Name** 2G
**Assumed Infl. Bot. = ±** 196.5 **ft. elv, GW elv=** <187.5 **ft, Cut/Fill** Cut
**USDA Soil** Visalia Sandy Loam
**HSG =** A **, Ksat: narrative (& in/hr)** high, 1.98 - 5.95 in/hr
**Geologic Unit:** Qal

**Table D.1-1: Considerations for Geotechnical Analysis of Infiltration Restrictions**

| Restriction Element | | Is Element Applicable? (Yes/No) |
|---|---|---|
| Mandatory Considerations | BMP is within 100' of Contaminated Soils | NO |
| | BMP is within 100' of Industrial Activities Lacking Source Control | NO |
| | BMP is within 100' of Well/Groundwater Basin | YES |
| | BMP is within 50' of Septic Tanks/Leach Fields | NO |
| | BMP is within 10' of Structures/Tanks/Walls | NO |
| | BMP is within 10' of Sewer Utilities | NO |
| | BMP is within 10' of Groundwater Table | YES |
| | BMP is within Hydric Soils | NO |
| | BMP is within Highly Liquefiable Soils and has Connectivity to Structures | YES |
| | BMP is within 1.5 Times the Height of Adjacent Steep Slopes (≥25%) | NO |
| | County Staff has Assigned "Restricted" Infiltration Category | |
| Optional Considerations | BMP is within Predominantly Type D Soil | NO |
| | BMP is within 10' of Property Line | NO |
| | BMP is within Fill Depths of ≥5' (Existing or Proposed) | NO |
| | BMP is within 10' of Underground Utilities | NO |
| | BMP is within 250' of Ephemeral Stream | NO |
| | Other (Provide detailed geotechnical support) BMP within 10' of Bedrock/Obstruction | NO |
| Result | Based on examination of the best available information, **I have not identified any restrictions above.** | **Unrestricted** |
| | Based on examination of the best available information, **I have identified one or more restrictions above.** | **X Restricted** |

**Table D.2-1: Elements for Determination of Design Infiltration Rates**

| Item | Value | Unit |
|---|---|---|
| Initial Infiltration Rate: Identify per Section D.2.1 in/hr (30+46.5)/2 = | 38.25 | in/hr |
| Corrected Infiltration Rate: Identify per Section D.2.2 in/hr | 1.812 | in/hr |
| Safety Factor: Identify per Section D.2.3 unitless | Min 2.0 | unitless |
| Design Infiltration Rate: Corrected Infiltration Rate ÷ Safety Factor in/hr | 0.906 | in/hr |

Using USDA maps, if NRCS soil type present within a proposed BMP location, Default design infiltration rates (in/hr) for each NRCS soil type are: A=0.300, B=0.200, C=0.100, D=0.025, Restricted=0.000. Use of these default design infiltration rates does not require application of any correction factors or safety factors.

**Table D.2-3: Determination of Safety Factor**

| Consideration | | Assigned Weight (w) | Factor Value (v) | Product (p) p = w x v |
|---|---|---|---|---|
| Suitability Assessment (A) | Infiltration Testing Method | 0.25 | Refer to Table D.2-4 | 2 x 0.25 |
| | Soil Texture Class | 0.25 | | 2 x 0.25 |
| | Soil Variability | 0.25 | | 2 x 0.25 |
| | Depth to Groundwater/Obstruction | 0.25 | | 2 x 0.25 |
| | Suitability Assessment Safety Factor, $S_A = \Sigma p$ | | | 2.00 |
| Design (B) | Pretreatment | 0.50 | Refer to Table D.2-4 | |
| | Resiliency | 0.25 | | |
| | Compaction | 0.25 | | |
| | Design Safety Factor, $S_B = \Sigma p$ | | | |
| Safety Factor, $S = S_A \times S_B$ (Must be always greater than or equal to 2) | | | | Min 2.0 |

**GeoSoils, Inc.**

# BORING LOG

*PROJECT:* OCEAN BREEZE
5280 W. Lilac Road, Bonsall

*W.O.* 6960-A12-SC *BORING* IB-137 *SHEET* 1 *OF* 1

*DATE EXCAVATED* 2-11-21 *LOGGED BY:* MS *APPROX. ELEV.:* 198'

*SAMPLE METHOD:* BASIN 2G

| Depth (ft.) | Sample: Bulk | Sample: Undisturbed | Sample: Blows/Ft. | USCS Symbol | Dry Unit Wt. (pcf) | Moisture (%) | Saturation (%) | Material Description |
|---|---|---|---|---|---|---|---|---|
| 0 | | | | SM | | | | **COLLUVIUM:** @ 0' SILTY/CLAYEY SAND, dark olive brown, moist, medium dense. |
| 5 | | | | SP | | | | **ALLUVIUM:** @ 4' Very fine SAND with SILT, grayish brown, damp to moist, loose to medium dense; very fine to fine grain sand, poorly graded. |
| | | | | | | | | Total Depth = 5' |
| | | | | | | | | No Groundwater or Caving Encountered |
| | | | | | | | | Backfilled 2-11-21 |
| 10 | | | | | | | | |
| 15 | | | | | | | | |
| 20 | | | | | | | | |
| 25 | | | | | | | | |
| 30 | | | | | | | | |

▼ *Standard Penetration Test*
⌶ *Undisturbed, Ring Sample*
▽ *Groundwater*
♀ *Seepage*

**GeoSoils, Inc.**

*PLATE* _____

**GeoSoils, Inc.**

# BORING LOG

*PROJECT:* OCEAN BREEZE
5280 W. Lilac Road, Bonsall

*W.O.* 6960-A12-SC *BORING* IB-138 *SHEET* 1 *OF* 1

*DATE EXCAVATED* 2-11-21 *LOGGED BY:* MS *APPROX. ELEV.:* 198'

*SAMPLE METHOD:* BASIN 2G

| Depth (ft.) | Sample: Bulk | Sample: Undisturbed | Sample: Blows/Ft. | USCS Symbol | Dry Unit Wt. (pcf) | Moisture (%) | Saturation (%) | Material Description |
|---|---|---|---|---|---|---|---|---|
| 0 | | | | SM | | | | **COLLUVIUM:** @ 0' SILTY SAND, dark grayish brown, moist, loose to medium dense; very fine to medium grain sand. |
| 5 | | | | SP | | | | **ALLUVIUM:** @ 4' Very fine SAND with SILT, grayish brown, moist, loose to medium dense; very fine to fine grain sand. |
| 10 | | | | | | | | Total Depth = 5' |
| 15 | | | | | | | | No Groundwater or Caving Encountered |
| 20 | | | | | | | | Backfilled 2-11-21 |
| 25 | | | | | | | | |
| 30 | | | | | | | | |

▼ *Standard Penetration Test*
⌶ *Undisturbed, Ring Sample*
▽ *Groundwater*
♀ *Seepage*

**GeoSoils, Inc.**

*PLATE* _____

**GeoSoils, Inc.**

# BORING LOG

*PROJECT:* OCEAN BREEZE
5280 W. Lilac Road, Bonsall

*W.O.* 6960-A12-SC *BORING* GW-30 *SHEET* 1 *OF* 1

*DATE EXCAVATED* 2-11-21 *LOGGED BY:* MS *APPROX. ELEV.:* 198'

*SAMPLE METHOD:* BASIN 2G

| Depth (ft.) | Sample: Bulk | Sample: Undisturbed | Sample: Blows/Ft. | USCS Symbol | Dry Unit Wt. (pcf) | Moisture (%) | Saturation (%) | Material Description |
|---|---|---|---|---|---|---|---|---|
| 0 | | | | SM | | | | **COLLUVIUM:** @ 0' SILTY/CLAYEY SAND, dark grayish brown, moist, medium dense; veyr fine to medium grain sand. |
| 5 | | | | SW | | | | **ALLUVIUM:** @ 5' SAND, dusky yellowish brown, damp, loose; fine to coarse grain sand, well graded. |
| | | | | SP | | | | @ 8' As per 5'; fine SAND with SILT, dark grayish brown, poorly graded, very fine to medium grain sand. |
| 10 | | | | CL | | | | @ 11' As per 8'; SANDY CLAY, wet to saturated, soft to medium, stiff. |
| 15 | | | | | | | | Total Depth = 15'<br>Groundwater Encountered @ 10½'<br>Cave In @ 13½'<br>Backfilled 2-11-21 |
| 20 | | | | | | | | |
| 25 | | | | | | | | |
| 30 | | | | | | | | |

*Standard Penetration Test*
*Undisturbed, Ring Sample*
*Groundwater*
*Seepage*

**GeoSoils, Inc.**

*PLATE* _____

Basin 2b1

## Percolation Test Data Sheet

| | | | | | |
|---|---|---|---|---|---|
| Project: | Ocean Breeze | Project No: | 6960-A12 | Date: | 2-12-21 |
| Test Hole No: | IB-137 | Tested By: | Matt Smelski | | |
| Depth of Test Hole, $D_T$: | 58.00 | USCS Soil Classification: | | | |
| Test Hole Dimensions (inches) | | | Length | Width | |
| Diameter (if round)= | 8 inches | Sides (if rectangular)= | | | |

Sandy Soil Criteria Test*

| Trial No. | Start Time | Stop Time | Time Interval, (min.) | Initial Depth to Water (in.) | Final Depth to Water (in.) | Change in Water Level (in.) | Greater than or Equal to 6"? (y/n) |
|---|---|---|---|---|---|---|---|
| 1 | 8:10 | 8:35 | 25 | 14.00 | 24.00 | 10.00 | Y |
| 2 | 8:35 | 9:00 | 25 | 14.50 | 22.00 | 7.50 | Y |

*If two consecutive measurements show that six inches of water seeps away in less than 25 minutes, the test shall be run for an additional hour with measurements taken every 10 minutes. Other wise, pre-soak (fill) overnight. Obtain at least twelve measurements per hole over at least six hours (approximately 30 minute intervals) with a precision of at least 0.25".

| Trial No. | Start Time | Stop Time | Δt Time Interval (min.) | $D_o$ Initial Depth to Water (in.) | $D_f$ Final Depth to Water (in.) | ΔD Change in Water Level (in.) | Percolation Rate (min./in.) |
|---|---|---|---|---|---|---|---|
| 1 | 3:49 | 3:59 | 10 | 15.50 | 21.50 | 6.00 | 1.67 |
| 2 | 3:59 | 4:09 | 10 | 14.00 | 19.50 | 5.50 | 1.82 |
| 3 | 4:10 | 4:20 | 10 | 13.50 | 19.00 | 5.50 | 1.82 |
| 4 | 4:21 | 4:31 | 10 | 13.00 | 17.50 | 5.50 | 1.82 |
| 5 | 4:33 | 4:43 | 10 | 13.25 | 18.25 | 5.00 | 2.00 |
| 6 | 4:44 | 4:54 | 10 | 13.00 | 18.00 | 5.00 | 2.00 |
| 7 | | | | | | | |
| 8 | | | | | | | |
| 9 | | | | | | | |
| 10 | | | | | | | |
| 11 | | | | | | | |
| 12 | | | | | | | |
| 13 | | | | | | | |
| 14 | | | | | | | |
| 15 | | | | | | | |

30.00 in/hr

COMMENTS:

Table 5 – Sample Test Data Form for Percolation Test

Basin 2b1

## Percolation Test Data Sheet

| Project: | Ocean Breeze | Project No: | 6960-A12 | Date: | 2-12-21 |
|---|---|---|---|---|---|
| Test Hole No: | IB-138 | Tested By: | Matt Smelski | | |
| Depth of Test Hole, $D_T$: | 56.50 | USCS Soil Classification: | | | |
| Test Hole Dimensions (inches) | | | Length | Width | |
| Diameter (if round)= | 8 inches | Sides (if rectangular)= | | | |

Sandy Soil Criteria Test*

| Trial No. | Start Time | Stop Time | Time Interval, (min.) | Initial Depth to Water (in.) | Final Depth to Water (in.) | Change in Water Level (in.) | Greater than or Equal to 6"? (y/n) |
|---|---|---|---|---|---|---|---|
| 1 | 8:10 | 8:35 | 25 | 15.50 | 33.50 | 18.00 | Y |
| 2 | 8:35 | 9:00 | 25 | 14.00 | 29.00 | 15.00 | Y |

*If two consecutive measurements show that six inches of water seeps away in less than 25 minutes, the test shall be run for an additional hour with measurements taken every 10 minutes. Other wise, pre-soak (fill) overnight. Obtain at least twelve measurements per hole over at least six hours (approximately 30 minute intervals) with a precision of at least 0.25".

| Trial No. | Start Time | Stop Time | $\Delta t$ Time Interval (min.) | $D_o$ Initial Depth to Water (in.) | $D_f$ Final Depth to Water (in.) | $\Delta D$ Change in Water Level (in.) | Percolation Rate (min./in.) |
|---|---|---|---|---|---|---|---|
| 1 | 3:50 | 4:00 | 10 | 13.75 | 26.25 | 12.50 | 0.80 |
| 2 | 4:01 | 4:11 | 10 | 17.00 | 27.00 | 10.00 | 1.00 |
| 3 | 4:11 | 4:21 | 10 | 13.50 | 22.50 | 9.00 | 1.11 |
| 4 | 4:22 | 4:32 | 10 | 13.50 | 22.50 | 9.00 | 1.11 |
| 5 | 4:34 | 4:44 | 10 | 14.25 | 22.50 | 8.25 | 1.21 |
| 6 | 4:45 | 4:55 | 10 | 13.75 | 21.50 | 7.75 | 1.29 |
| 7 | | | | | | | |
| 8 | | | | | | | |
| 9 | | | | | | | |
| 10 | | | | | | | |
| 11 | | | | | | | |
| 12 | | | | | | | |
| 13 | | | | | | | |
| 14 | | | | | | | |
| 15 | | | | | | | |

46.50 in/hr

COMMENTS:

Table 5 – Sample Test Data Form for Percolation Test

County of San Diego

From: Appendix D- Approved Infiltration Rate Assessment Methods

**Basin Name** 2H

**Assumed Infl. Bot. = ±** 188.0 **ft. elv, GW elv=** <179.0 **ft, Cut/Fill** Cut

**USDA Soil** Placentia Sandy Loam/Cieneba Coarse Sandy Loam

**HSG =** D **, Ksat: narrative (& in/hr)** very low to moderately low (0.00 - 0.06)

**Geologic Unit:** Kcc

**Table D.1-1: Considerations for Geotechnical Analysis of Infiltration Restrictions**

| Restriction Element | | Is Element Applicable? (Yes/No) |
|---|---|---|
| Mandatory Considerations | BMP is within 100' of Contaminated Soils | NO |
| | BMP is within 100' of Industrial Activities Lacking Source Control | NO |
| | BMP is within 100' of Well/Groundwater Basin | YES |
| | BMP is within 50' of Septic Tanks/Leach Fields | NO |
| | BMP is within 10' of Structures/Tanks/Walls | NO |
| | BMP is within 10' of Sewer Utilities | NO |
| | BMP is within 10' of Groundwater Table | NO |
| | BMP is within Hydric Soils | NO |
| | BMP is within Highly Liquefiable Soils and has Connectivity to Structures | YES |
| | BMP is within 1.5 Times the Height of Adjacent Steep Slopes (≥25%) | NO |
| | County Staff has Assigned "Restricted" Infiltration Category | |
| Optional Considerations | BMP is within Predominantly Type D Soil | YES |
| | BMP is within 10' of Property Line | NO |
| | BMP is within Fill Depths of ≥5' (Existing or Proposed) | NO |
| | BMP is within 10' of Underground Utilities | NO |
| | BMP is within 250' of Ephemeral Stream | NO |
| | Other (Provide detailed geotechnical support) BMP within 10' of Bedrock/Obstruction | YES |
| Result | Based on examination of the best available information, **I have not identified any restrictions above.** | **Unrestricted** |
| | Based on examination of the best available information, **I have identified one or more restrictions above.** | **X Restricted** |

**Table D.2-1: Elements for Determination of Design Infiltration Rates**

| Item | | Value | Unit |
|---|---|---|---|
| Initial Infiltration Rate: Identify per Section D.2.1 in/hr | (5+0.5)/2 = | 2.75 | in/hr |
| Corrected Infiltration Rate: Identify per Section D.2.2 in/hr | | 0.138 | in/hr |
| Safety Factor: Identify per Section D.2.3 unitless | | Min 2.0 | unitless |
| Design Infiltration Rate: Corrected Infiltration Rate ÷ Safety Factor in/hr | | 0.069 | in/hr |

Using USDA maps, if NRCS soil type present within a proposed BMP location, Default design infiltration rates (in/hr) for each NRCS soil type are: A=0.300, B=0.200, C=0.100, D=0.025, Restricted=0.000. Use of these default design infiltration rates does not require application of any correction factors or safety factors.

**Table D.2-3: Determination of Safety Factor**

| Consideration | | Assigned Weight (w) | Factor Value (v) | Product (p) p = w x v |
|---|---|---|---|---|
| Suitability Assessment (A) | Infiltration Testing Method | 0.25 | Refer to Table D.2-4 | 2 x 0.25 |
| | Soil Texture Class | 0.25 | | 1 x 0.25 |
| | Soil Variability | 0.25 | | 1 x 0.25 |
| | Depth to Groundwater/Obstruction | 0.25 | | 2 x 0.25 |
| | Suitability Assessment Safety Factor, $S_A = \Sigma p$ | | | 1.5 |
| Design (B) | Pretreatment | 0.50 | Refer to Table D.2-4 | |
| | Resiliency | 0.25 | | |
| | Compaction | 0.25 | | |
| | Design Safety Factor, $S_B = \Sigma p$ | | | |
| Safety Factor, $S = S_A \times S_B$ (Must be always greater than or equal to 2) | | | | Min 2.0 |

**GeoSoils, Inc.**

# BORING LOG

*PROJECT:* OCEAN BREEZE
5280 W. Lilac Road, Bonsall

*W.O.* 6960-A12-SC *BORING* IB-101 *SHEET* 1 *OF* 1

*DATE EXCAVATED* 1-20-21 *LOGGED BY:* MS *APPROX. ELEV.:* 190'

*SAMPLE METHOD:* BASIN 2H

| Depth (ft.) | Sample: Bulk | Sample: Undisturbed | Sample: Blows/Ft. | USCS Symbol | Dry Unit Wt. (pcf) | Moisture (%) | Saturation (%) | Material Description |
|---|---|---|---|---|---|---|---|---|
| 0 | | | | SM | | | | **COLLUVIUM:** |
| | | | | SM | | | | @ 0' SILTY SAND, light to dark grayish brown, dry to damp, medium dense; organics. |
| | | | | | | | | **ALLUVIUM:** |
| 5 | | | | | | | | @ 1½' SILTY SAND, dark reddish brown, damp, medium dense; fine to medium grain sand. |
| | | | | | | | | Total Depth = 5' |
| | | | | | | | | No Groundwater or Caving Encountered |
| | | | | | | | | Backfilled 1-21-21 |
| 10 | | | | | | | | |
| 15 | | | | | | | | |
| 20 | | | | | | | | |
| 25 | | | | | | | | |
| 30 | | | | | | | | |

▼ *Standard Penetration Test*
⌶ *Undisturbed, Ring Sample*
▽ *Groundwater*
♀ *Seepage*

**GeoSoils, Inc.**

*PLATE* _____

**GeoSoils, Inc.**

# BORING LOG

*PROJECT:* OCEAN BREEZE
5280 W. Lilac Road, Bonsall

*W.O.* 6960-A12-SC *BORING* IB-102 *SHEET* 1 *OF* 1

*DATE EXCAVATED* 1-20-21 *LOGGED BY:* MS *APPROX. ELEV.:* 190'

*SAMPLE METHOD:* BASIN 2H

| Depth (ft.) | Sample: Bulk | Sample: Undisturbed | Sample: Blows/Ft. | USCS Symbol | Dry Unit Wt. (pcf) | Moisture (%) | Saturation (%) | Material Description |
|---|---|---|---|---|---|---|---|---|
| 0 | | | | SM | | | | **COLLUVIUM:** |
| | | | | SC | | | | @ 0' SILTY SAND, grayish brown, dry, loose to medium dense; few organics. |
| | | | | | | | | **ALLUVIUM:** |
| 5 | | | | | | | | @ 1' CLAYEY SAND, reddish brown, damp, medium dense; fine to medium grain sand. |
| | | | | | | | | Total Depth = 5' |
| | | | | | | | | No Groundwater or Caving Encountered |
| | | | | | | | | Backfilled 1-21-21 |
| 10 | | | | | | | | |
| 15 | | | | | | | | |
| 20 | | | | | | | | |
| 25 | | | | | | | | |
| 30 | | | | | | | | |

▼ *Standard Penetration Test*
⌶ *Undisturbed, Ring Sample*
▽ *Groundwater*
♀ *Seepage*

**GeoSoils, Inc.**

*PLATE* _____

**GeoSoils, Inc.**

# BORING LOG

*PROJECT:* OCEAN BREEZE
5280 W. Lilac Road, Bonsall

*W.O.* 6960-A12-SC *BORING* GW-12 *SHEET* 1 *OF* 1

*DATE EXCAVATED* 1-20-21 *LOGGED BY:* MS *APPROX. ELEV.:* 189'

*SAMPLE METHOD:* BASIN 2H

| Depth (ft.) | Sample: Bulk | Sample: Undisturbed | Sample: Blows/Ft. | USCS Symbol | Dry Unit Wt. (pcf) | Moisture (%) | Saturation (%) | Material Description |
|---|---|---|---|---|---|---|---|---|
| 0 | | | | SM | | | | **COLLUVIUM:** |
| | | | | SM | | | | @ 0' SILTY SAND, grayish brown, dry, loose to medium dense; organics. |
| | | | | | | | | **ALLUVIUM:** |
| | | | | | | | | @ 1' SILTY SAND, reddish brown, dry, loose to medium dense. |
| | | | | | | | | @ 4' As per 1'; dark reddish brown, damp to moist, medium dense. |
| 5 | | | | CL | | | | @ 5' As per 4'; SANDY CLAY, medium stiff. |
| | | | | SM | | | | **GRANITICS:** |
| | | | | | | | | @ 6' SILTY SAND, light yellowish brown to pale olive, damp, dense; disingtegrates to fine to coarse sand. |
| 10 | | | | | | | | @ 10' As per 6'; wet, very dense. |
| | | | | | | | | @ 11' As per 10'; saturated. |
| 15 | | | | | | | | Total Depth = 15' |
| | | | | | | | | Groundwater Encountered at 11' |
| | | | | | | | | No Caving |
| | | | | | | | | Backfilled 1-21-21 |
| 20 | | | | | | | | |
| 25 | | | | | | | | |
| 30 | | | | | | | | |

*Standard Penetration Test*
*Undisturbed, Ring Sample*
*Groundwater*
*Seepage*

**GeoSoils, Inc.**

*PLATE* _____

Basin 2H **Percolation Test Data Sheet**

| Project: | Ocean Breeze | Project No: | 6960-A12 | Date: | 1-21-21 |
|---|---|---|---|---|---|
| Test Hole No: | IB-101 | Tested By: | Matt S. | | |
| Depth of Test Hole, $D_T$: | 48" | USCS Soil Classification: | SM | | |
| Test Hole Dimensions (inches) | | | Length | Width | |
| Diameter (if round)= | 8" | Sides (if rectangular)= | | | |

Sandy Soil Criteria Test*

| Trial No. | Start Time | Stop Time | Time Interval, (min.) | Initial Depth to Water (in.) | Final Depth to Water (in.) | Change in Water Level (in.) | Greater than or Equal to 6"? (y/n) |
|---|---|---|---|---|---|---|---|
| 1 | 8:52 | 9:17 | 25 | 6.00 | 14.00 | 8.00 | Y |
| 2 | 9:25 | 9:50 | 25 | 6.25 | 17.00 | 5.75 | N |

*If two consecutive measurements show that six inches of water seeps away in less than 25 minutes, the test shall be run for an additional hour with measurements taken every 10 minutes. Other wise, pre-soak (fill) overnight. Obtain at least twelve measurements per hole over at least six hours (approximately 30 minute intervals) with a precision of at least 0.25".

| Trial No. | Start Time | Stop Time | $\Delta t$ Time Interval (min.) | $D_o$ Initial Depth to Water (in.) | $D_f$ Final Depth to Water (in.) | $\Delta D$ Change in Water Level (in.) | Percolation Rate (min./in.) |
|---|---|---|---|---|---|---|---|
| 1 | 10:33 | 11:03 | 30 | 8.25 | 12.75 | 4.5 | 6.66 |
| 2 | 11:04 | 11:34 | | 8.00 | 12.25 | 4.25 | 7.0 |
| 3 | 11:39 | 12:09 | | 7.00 | 11.25 | 4.25 | 7.0 |
| 4 | 12:10 | 12:40 | | 8.00 | 12.00 | 4 | 7.5 |
| 5 | 12:41 | 1:11 | | 9.00 | 12.50 | 3.5 | 8.6 |
| 6 | 1:12 | 1:42 | | 9.50 | 13.00 | 3.5 | 8.6 |
| 7 | 1:45 | 2:15 | | 10.75 | 13.75 | 3 | 10 |
| 8 | 2:16 | 2:46 | | 10.00 | 12.75 | 2.75 | 10.9 |
| 9 | 2:47 | 3:17 | | 8.50 | 11.25 | 2.75 | 10.9 |
| 10 | 3:18 | 3:48 | | 9.00 | 11.50 | 2.50 | 12 |
| 11 | 3:50 | 4:20 | | 8.75 | 11.25 | 2.50 | 12 |
| 12 | 4:21 | 4:51 | | 9.00 | 11.50 | 2.50 | 12 |
| 13 | | | | | | | |
| 14 | | | | | | | |
| 15 | | | | | | | |

5.00 in/hr

COMMENTS:

K= 0.25 in/hr

Table 5 – Sample Test Data Form for Percolation Test

Basin 2H

## Percolation Test Data Sheet

| | | | | | |
|---|---|---|---|---|---|
| Project: | Ocean Breeze | Project No: | 6960-A12 | Date: | 1-21-21 |
| Test Hole No: | TB-102 | Tested By: | Matt S. | | |
| Depth of Test Hole, $D_T$: | 52" | USCS Soil Classification: | | | |
| Test Hole Dimensions (inches) | | | Length | Width | |
| Diameter (if round)= | 8" | Sides (if rectangular)= | | | |

Sandy Soil Criteria Test*

| Trial No. | Start Time | Stop Time | Time Interval, (min.) | Initial Depth to Water (in.) | Final Depth to Water (in.) | Change in Water Level (in.) | Greater than or Equal to 6"? (y/n) |
|---|---|---|---|---|---|---|---|
| 1 | 8:51 | 9:16 | 25 | 12.75 | 13.00 | 0.25 | NO |
| 2 | 9:25 | 9:50 | 25 | 13.00 | 13.25 | 0.25 | NO |

*If two consecutive measurements show that six inches of water seeps away in less than 25 minutes, the test shall be run for an additional hour with measurements taken every 10 minutes. Other wise, pre-soak (fill) overnight. Obtain at least twelve measurements per hole over at least six hours (approximately 30 minute intervals) with a precision of at least 0.25".

| Trial No. | Start Time | Stop Time | $\Delta t$ Time Interval (min.) | $D_o$ Initial Depth to Water (in.) | $D_f$ Final Depth to Water (in.) | $\Delta D$ Change in Water Level (in.) | Percolation Rate (min./in.) |
|---|---|---|---|---|---|---|---|
| 1 | 10:34 | 11:04 | 30 | 13.25 | 13.50 | 0.25 | 120 |
| 2 | 11:05 | 11:35 | " | 13.00 | 13.25 | 0.25 | " |
| 3 | 11:40 | 12:10 | " | 13.75 | 14.00 | 0.25 | " |
| 4 | 12:11 | 12:41 | " | 13.50 | 13.75 | 0.25 | " |
| 5 | 12:42 | 1:12 | " | 14.00 | 14.25 | 0.25 | " |
| 6 | 1:13 | 1:43 | " | 14.25 | 14.50 | 0.25 | " |
| 7 | 1:44 | 2:14 | " | 14.50 | 14.75 | 0.25 | " |
| 8 | 2:15 | 2:45 | " | 14.00 | 14.25 | 0.25 | " |
| 9 | 2:46 | 3:16 | " | 13.75 | 14.00 | 0.25 | " |
| 10 | 3:17 | 3:47 | " | 14.25 | 14.50 | 0.25 | " |
| 11 | 3:49 | 4:19 | " | 13.50 | 13.75 | 0.25 | " |
| 12 | 4:20 | 4:50 | " | 13.50 | 13.75 | 0.25 | " |
| 13 | | | | | | | |
| 14 | | | | | | | |
| 15 | | | | | | | |

0.50 in/hr

COMMENTS: K = 0.02 in/hr

Table 5 – Sample Test Data Form for Percolation Test

County of San Diego

From: Appendix D- Approved Infiltration Rate Assessment Methods

**Basin Name** 3A
**Assumed Infl. Bot. = ±** 245.0 **ft. elv, GW elv=** <235.0 **ft, Cut/Fill** Cut
**USDA Soil** Placentia Sandy Loam
**HSG =** C **, Ksat: narrative (& in/hr)** mod. low - mod. high (0.06 - 0.6 in/hr)
**Geologic Unit:** Qoa

**Table D.1-1: Considerations for Geotechnical Analysis of Infiltration Restrictions**

| Restriction Element | | Is Element Applicable? (Yes/No) |
|---|---|---|
| Mandatory Considerations | BMP is within 100' of Contaminated Soils | NO |
| | BMP is within 100' of Industrial Activities Lacking Source Control | NO |
| | BMP is within 100' of Well/Groundwater Basin | NO |
| | BMP is within 50' of Septic Tanks/Leach Fields | NO |
| | BMP is within 10' of Structures/Tanks/Walls | NO |
| | BMP is within 10' of Sewer Utilities | NO |
| | BMP is within 10' of Groundwater Table | NO |
| | BMP is within Hydric Soils | NO |
| | BMP is within Highly Liquefiable Soils and has Connectivity to Structures | NO |
| | BMP is within 1.5 Times the Height of Adjacent Steep Slopes (≥25%) | NO |
| | County Staff has Assigned "Restricted" Infiltration Category | |
| Optional Considerations | BMP is within Predominantly Type D Soil | NO |
| | BMP is within 10' of Property Line | NO |
| | BMP is within Fill Depths of ≥5' (Existing or Proposed) | NO |
| | BMP is within 10' of Underground Utilities | NO |
| | BMP is within 250' of Ephemeral Stream | NO |
| | Other (Provide detailed geotechnical support) BMP within 10' of Bedrock/Obstruction | |
| Result | Based on examination of the best available information, **I have not identified any restrictions above.** | **Unrestricted** |
| | Based on examination of the best available information, **I have identified one or more restrictions above.** | **X Restricted** |

**Table D.2-1: Elements for Determination of Design Infiltration Rates**

| Item | Value | Unit |
|---|---|---|
| Initial Infiltration Rate: Identify per Section D.2.1 in/hr (1.5+1.5)/2 = | 1.50 | in/hr |
| Corrected Infiltration Rate: Identify per Section D.2.2 in/hr | 0.080 | in/hr |
| Safety Factor: Identify per Section D.2.3 unitless | Min 2.0 | unitless |
| Design Infiltration Rate: Corrected Infiltration Rate ÷ Safety Factor in/hr | use default 0.100 | in/hr |

Using USDA maps, if NRCS soil type present within a proposed BMP location, Default design infiltration rates (in/hr) for each NRCS soil type are: A=0.300, B=0.200, C=0.100, D=0.025, Restricted=0.000. Use of these default design infiltration rates does not require application of any correction factors or safety factors.

**Table D.2-3: Determination of Safety Factor**

| Consideration | | Assigned Weight (w) | Factor Value (v) | Product (p) p = w x v |
|---|---|---|---|---|
| Suitability Assessment (A) | Infiltration Testing Method | 0.25 | Refer to Table D.2-4 | 2 x 0.25 |
| | Soil Texture Class | 0.25 | | 3 x 0.25 |
| | Soil Variability | 0.25 | | 2 x 0.25 |
| | Depth to Groundwater/Obstruction | 0.25 | | 1 x 0.25 |
| | Suitability Assessment Safety Factor, $S_A = \Sigma p$ | | | 2.0 |
| Design (B) | Pretreatment | 0.50 | Refer to Table D.2-4 | |
| | Resiliency | 0.25 | | |
| | Compaction | 0.25 | | |
| | Design Safety Factor, $S_B = \Sigma p$ | | | |
| Safety Factor, $S = S_A \times S_B$ (Must be always greater than or equal to 2) | | | | Min 2.0 |

**GeoSoils, Inc.**

# BORING LOG

*PROJECT:* OCEAN BREEZE
5280 W. Lilac Road, Bonsall

*W.O.* 6960-A12-SC *BORING* IB-107 *SHEET* 1 *OF* 1

*DATE EXCAVATED* 1-20-21 *LOGGED BY:* MS *APPROX. ELEV.:* 252'

*SAMPLE METHOD:* BASIN 3A

| Depth (ft.) | Sample: Bulk | Sample: Undisturbed | Sample: Blows/Ft. | USCS Symbol | Dry Unit Wt. (pcf) | Moisture (%) | Saturation (%) | Material Description |
|---|---|---|---|---|---|---|---|---|
| 0 | | | | SM/ SC | | | | **COLLUVIUM:** @ 0' SILTY/CLAYEY SAND, light brown, dry, loose to medium dense; organics, fine to very coarse sand. |
| | | | | SC | | | | @ ½' As per 0'; reddish brown, damp. |
| 5 | | | | | | | | **OLDER ALLUVIUM:** @ 2½' CLAYEY SAND, olive brown, damp to moist, dense; fine to medium grain sand. |
| | | | | | | | | Total Depth = 5' |
| | | | | | | | | No Groundwater or Caving Encountered |
| | | | | | | | | Backfilled 1-21-21 |
| 10 | | | | | | | | |
| 15 | | | | | | | | |
| 20 | | | | | | | | |
| 25 | | | | | | | | |
| 30 | | | | | | | | |

▼ *Standard Penetration Test*
⌶ *Undisturbed, Ring Sample*
▽ *Groundwater*
♀ *Seepage*

**GeoSoils, Inc.**

*PLATE* _____

**GeoSoils, Inc.**

# BORING LOG

*PROJECT:* OCEAN BREEZE
5280 W. Lilac Road, Bonsall

*W.O.* 6960-A12-SC *BORING* IB-108 *SHEET* 1 *OF* 1

*DATE EXCAVATED* 1-20-21 *LOGGED BY:* MS *APPROX. ELEV.:* 251'

*SAMPLE METHOD:* BASIN 3A

| Depth (ft.) | Sample: Bulk | Sample: Undisturbed | Sample: Blows/Ft. | USCS Symbol | Dry Unit Wt. (pcf) | Moisture (%) | Saturation (%) | Material Description |
|---|---|---|---|---|---|---|---|---|
| 0 | | | | SM | | | | **COLLUVIUM:** @ 0' SILTY/CLAYEY SAND, light brown, dry, loose to medium dense; fine to very coarse sand. |
| | | | | SM/ SC | | | | @ ½' As per 0'; reddish brown, damp. **OLDER ALLUVIUM:** @ 2½' CLAYEY SAND, dark reddish brown and olive brown, damp to moist, dense; fine to medium grain sand. |
| 5 | | | | | | | | Total Depth = 5' No Groundwater or Caving Encountered Backfilled 1-21-21 |
| 10 | | | | | | | | |
| 15 | | | | | | | | |
| 20 | | | | | | | | |
| 25 | | | | | | | | |
| 30 | | | | | | | | |

▼ *Standard Penetration Test*
⌶ *Undisturbed, Ring Sample*
▽ *Groundwater*
♀ *Seepage*

**GeoSoils, Inc.**

*PLATE* _____

**GeoSoils, Inc.**

# BORING LOG

*PROJECT:* OCEAN BREEZE
5280 W. Lilac Road, Bonsall

*W.O.* 6960-A12-SC *BORING* GW-15 *SHEET* 1 *OF* 1

*DATE EXCAVATED* 1-20-21 *LOGGED BY:* MS *APPROX. ELEV.:* 250'

*SAMPLE METHOD:* BASIN 3A

| Depth (ft.) | Sample: Bulk | Sample: Undisturbed | Sample: Blows/Ft. | USCS Symbol | Dry Unit Wt. (pcf) | Moisture (%) | Saturation (%) | Material Description |
|---|---|---|---|---|---|---|---|---|
| 0 | | | | SM/ SC | | | | **COLLUVIUM:** @ 0' SILTY/CLAYEY SAND, light brown, dry, loose to medium dense. @ ½' As per 0'; reddish brown, damp. |
| 5 | | | | SC | | | | **OLDER ALLUVIUM:** @ 3' CLAYEY SAND, olive brown, damp to moist, dense; fine to medium grain sand. @ 5' As per 3'; dark olive brown. |
| 10 | | | | SM | | | | @ 8' SILTY SAND, reddish brown, damp, dense; fine to very coarse sand. |
| 15 | | | | SM | | | | **WEATHERED GRANITICS:** @ 12' SILTY SAND, pale olive, brown, dry to damp, very dense; disintegrates to silty sand. |
| 20 | | | | | | | | Total Depth = 15' No Groundwater or Caving Encountered Backfilled 1-21-21 |
| 25 | | | | | | | | |
| 30 | | | | | | | | |

▼ *Standard Penetration Test*
⌶ *Undisturbed, Ring Sample*
▽ *Groundwater*
♀ *Seepage*

**GeoSoils, Inc.**

*PLATE* _____

Basin 3A **Percolation Test Data Sheet**

| Project: | Ocean Breeze | Project No: | 6960-A12 | Date: | 1-21-21 |
|---|---|---|---|---|---|
| Test Hole No: | IB-107 | Tested By: | Matt S. | | |
| Depth of Test Hole, $D_f$: | 54" | USCS Soil Classification: | | | |
| Test Hole Dimensions (inches) | | | Length | Width | |
| Diameter (if round)= | 8" | Sides (if rectangular)= | | | |

Sandy Soil Criteria Test*

| Trial No. | Start Time | Stop Time | Time Interval, (min.) | Initial Depth to Water (in.) | Final Depth to Water (in.) | Change in Water Level (in.) | Greater than or Equal to 6"? (y/n) |
|---|---|---|---|---|---|---|---|
| 1 | 9:13 | 9:38 | 25 | 14.50 | 16.50 | 2.00 | N |
| 2 | 9:40 | 10:05 | 25 | 14.50 | 16.00 | 1.50 | N |

*If two consecutive measurements show that six inches of water seeps away in less than 25 minutes, the test shall be run for an additional hour with measurements taken every 10 minutes. Other wise, pre-soak (fill) overnight. Obtain at least twelve measurements per hole over at least six hours (approximately 30 minute intervals) with a precision of at least 0.25".

| Trial No. | Start Time | Stop Time | $\Delta t$ Time Interval (min.) | $D_o$ Initial Depth to Water (in.) | $D_f$ Final Depth to Water (in.) | $\Delta D$ Change in Water Level (in.) | Percolation Rate (min./in.) |
|---|---|---|---|---|---|---|---|
| 1 | 10:50 | 11:20 | 30 | 14.75 | 15.75 | 1.00 | 30 |
| 2 | 11:21 | 11:51 | | 14.50 | 15.00 | 0.50 | 60 |
| 3 | 11:56 | 12:27 | | 16.25 | 17.00 | 0.75 | 40 |
| 4 | 12:28 | 12:58 | | 17.00 | 17.75 | 0.75 | 40 |
| 5 | 1:03 | 1:33 | | 16.00 | 17.00 | 1.00 | 30 |
| 6 | 1:34 | 2:04 | | 17.00 | 18.00 | 1.00 | 30 |
| 7 | 2:07 | 2:37 | | 16.00 | 17.00 | 1.00 | 30 |
| 8 | 2:38 | 3:08 | | 16.50 | 17.50 | 1.00 | 30 |
| 9 | 3:09 | 3:39 | | 15.50 | 16.50 | 1.00 | 30 |
| 10 | 3:40 | 4:10 | | 16.00 | 16.75 | 0.75 | 40 |
| 11 | 4:11 | 4:41 | | 16.25 | 17.00 | 0.75 | 40 |
| 12 | 4:42 | 5:12 | | 16.00 | 16.75 | 0.75 | 40 |
| 13 | | | | | | | |
| 14 | | | | | | | |
| 15 | | | | | | | |

1.50 in/hr

COMMENTS: Hole Caved In Near Top; Threw off Initial Results K= 0.08 in/hr

Table 5 – Sample Test Data Form for Percolation Test

Basin 3A

## Percolation Test Data Sheet

| Project: | Ocean Breeze | Project No: | 6960-A12 | Date: | 1-21-21 |
|---|---|---|---|---|---|
| Test Hole No: | IB-108 | Tested By: | Matt S. | | |
| Depth of Test Hole, $D_T$: | 51" | USCS Soil Classification: | | | |
| Test Hole Dimensions (inches) | | | | Length | Width |
| Diameter (if round)= | 8" | Sides (if rectangular)= | | | |

Sandy Soil Criteria Test*

| Trial No. | Start Time | Stop Time | Time Interval, (min.) | Initial Depth to Water (in.) | Final Depth to Water (in.) | Change in Water Level (in.) | Greater than or Equal to 6"? (y/n) |
|---|---|---|---|---|---|---|---|
| 1 | 9:15 | 9:40 | 25 | 16.75" | 19.00 | 2.25 | N |
| 2 | 9:41 | 10:06 | 25 | 17.00 | 19.00 | 2 | N |

*If two consecutive measurements show that six inches of water seeps away in less than 25 minutes, the test shall be run for an additional hour with measurements taken every 10 minutes. Other wise, pre-soak (fill) overnight. Obtain at least twelve measurements per hole over at least six hours (approximately 30 minute intervals) with a precision of at least 0.25".

| Trial No. | Start Time | Stop Time | $\Delta t$ Time Interval (min.) | $D_o$ Initial Depth to Water (in.) | $D_f$ Final Depth to Water (in.) | $\Delta D$ Change in Water Level (in.) | Percolation Rate (min./in.) |
|---|---|---|---|---|---|---|---|
| 1 | 10:52 | 11:22 | 30 | 17.50 | 18.75 | 1.25 | 24 |
| 2 | 11:23 | 11:53 | ↓ | 17.25 | 18.50 | 1.25 | 24 |
| 3 | 11:57 | 12:27 | | 16.50 | 17.75 | 1.25 | 24 |
| 4 | 12:28 | 12:58 | | 16.00 | 17.25 | 1.25 | 24 |
| 5 | 1:04 | 1:34 | | 15.50 | 17.25 | 1.75 | 17 |
| 6 | 1:35 | 2:05 | | 16.00 | 17.25 | 1.25 | 24 |
| 7 | 2:08 | 2:38 | | 18.00 | 19.00 | 1.00 | 30 |
| 8 | 2:39 | 3:09 | | 17.50 | 18.50 | 1.00 | 30 |
| 9 | 3:10 | 3:40 | | 17.75 | 18.75 | 1.00 | 30 |
| 10 | 3:41 | 4:11 | | 16.75 | 17.50 | 0.75 | 40 |
| 11 | 4:12 | 4:42 | | 17.00 | 17.75 | 0.75 | 40 |
| 12 | 4:43 | 5:13 | ↓ | 17.00 | 17.75 | 0.75 | 40 |
| 13 | | | | | | | |
| 14 | | | | | | | |
| 15 | | | | | | | |

1.50 in/hr

COMMENTS:

K= 0.08 in/hr

Table 5 – Sample Test Data Form for Percolation Test

County of San Diego

From: Appendix D- Approved Infiltration Rate Assessment Methods

**Basin Name** 3B
**Assumed Infl. Bot. = ±** 239.0 **ft. elv, GW elv=** <224.0 **ft, Cut/Fill** Cut
**USDA Soil** Placentia Sandy Loam
**HSG =** C **, Ksat: narrative (& in/hr)** mod. low - mod. high (0.06 - 0.6 in/hr)
**Geologic Unit:** Kcc

**Table D.1-1: Considerations for Geotechnical Analysis of Infiltration Restrictions**

| Restriction Element | | Is Element Applicable? (Yes/No) |
|---|---|---|
| Mandatory Considerations | BMP is within 100' of Contaminated Soils | NO |
| | BMP is within 100' of Industrial Activities Lacking Source Control | NO |
| | BMP is within 100' of Well/Groundwater Basin | NO |
| | BMP is within 50' of Septic Tanks/Leach Fields | NO |
| | BMP is within 10' of Structures/Tanks/Walls | NO |
| | BMP is within 10' of Sewer Utilities | NO |
| | BMP is within 10' of Groundwater Table | NO |
| | BMP is within Hydric Soils | NO |
| | BMP is within Highly Liquefiable Soils and has Connectivity to Structures | NO |
| | BMP is within 1.5 Times the Height of Adjacent Steep Slopes (≥25%) | NO |
| | County Staff has Assigned "Restricted" Infiltration Category | |
| Optional Considerations | BMP is within Predominantly Type D Soil | NO |
| | BMP is within 10' of Property Line | NO |
| | BMP is within Fill Depths of ≥5' (Existing or Proposed) | NO |
| | BMP is within 10' of Underground Utilities | NO |
| | BMP is within 250' of Ephemeral Stream | NO |
| | Other (Provide detailed geotechnical support) BMP within 10' of Bedrock/Obstruction | YES |
| Result | Based on examination of the best available information, **I have not identified any restrictions above.** | **Unrestricted** |
| | Based on examination of the best available information, **I have identified one or more restrictions above.** | **X Restricted** |

**Table D.2-1: Elements for Determination of Design Infiltration Rates**

| Item | Value | Unit |
|---|---|---|
| Initial Infiltration Rate: Identify per Section D.2.1 in/hr (1+1.5)/2 = | 1.25 | in/hr |
| Corrected Infiltration Rate: Identify per Section D.2.2 in/hr | 0.070 | in/hr |
| Safety Factor: Identify per Section D.2.3 unitless | Min 2.0 | unitless |
| Design Infiltration Rate: Corrected Infiltration Rate ÷ Safety Factor in/hr | 0.035 | in/hr |

Using USDA maps, if NRCS soil type present within a proposed BMP location, Default design infiltration rates (in/hr) for each NRCS soil type are: A=0.300, B=0.200, C=0.100, D=0.025, Restricted=0.000. Use of these default design infiltration rates does not require application of any correction factors or safety factors.

**Table D.2-3: Determination of Safety Factor**

| Consideration | | Assigned Weight (w) | Factor Value (v) | Product (p) p = w x v |
|---|---|---|---|---|
| Suitability Assessment (A) | Infiltration Testing Method | 0.25 | Refer to Table D.2-4 | 2 x 0.25 |
| | Soil Texture Class | 0.25 | | 2 x 0.25 |
| | Soil Variability | 0.25 | | 2 x 0.25 |
| | Depth to Groundwater/Obstruction | 0.25 | | 1 x 0.25 |
| | Suitability Assessment Safety Factor, $S_A = \Sigma p$ | | | 1.75 |
| Design (B) | Pretreatment | 0.50 | Refer to Table D.2-4 | |
| | Resiliency | 0.25 | | |
| | Compaction | 0.25 | | |
| | Design Safety Factor, $S_B = \Sigma p$ | | | |
| Safety Factor, $S = S_A \times S_B$ (Must be always greater than or equal to 2) | | | | Min 2.0 |

**GeoSoils, Inc.**

# BORING LOG

*PROJECT:* OCEAN BREEZE
5280 W. Lilac Road, Bonsall

*W.O.* 6960-A12-SC *BORING* IB-111 *SHEET* 1 *OF* 1

*DATE EXCAVATED* 1-20-21 *LOGGED BY:* MS *APPROX. ELEV.:* 242'

*SAMPLE METHOD:* BASIN 3B

| Depth (ft.) | Sample: Bulk | Sample: Undisturbed | Sample: Blows/Ft. | USCS Symbol | Dry Unit Wt. (pcf) | Moisture (%) | Saturation (%) | Material Description |
|---|---|---|---|---|---|---|---|---|
| 0 | | | | SM | | | | **COLLUVIUM:**<br>@ 0' SILTY SAND, light brown, dry, loose to medium dense.<br>@ ½' As per 0'; reddish brown, damp. |
| | | | | SM/ SC | | | | **WEATHERED GRANITICS:**<br>@ 3' SILTY/CLAYEY SAND, dark brown, moist, medium, dense; disintegrates to silty/clayey sand (residuum).<br>@ 5' As per 3; dark grayish brown; sandy clay. |
| 5 | | | | | | | | Total Depth = 5'<br>No Groundwater or Caving Encountered<br>Backfilled 1-22-21 |
| 10 | | | | | | | | |
| 15 | | | | | | | | |
| 20 | | | | | | | | |
| 25 | | | | | | | | |
| 30 | | | | | | | | |

▼ *Standard Penetration Test*
⌶ *Undisturbed, Ring Sample*
▽ *Groundwater*
♀ *Seepage*

**GeoSoils, Inc.**

*PLATE* _____

**GeoSoils, Inc.**

# BORING LOG

*PROJECT:* OCEAN BREEZE
5280 W. Lilac Road, Bonsall

*W.O.* 6960-A12-SC *BORING* IB-112 *SHEET* 1 *OF* 1

*DATE EXCAVATED* 1-20-21 *LOGGED BY:* MS *APPROX. ELEV.:* 240'

*SAMPLE METHOD:* BASIN 3B

| Depth (ft.) | Sample: Bulk | Sample: Undisturbed | Sample: Blows/Ft. | USCS Symbol | Dry Unit Wt. (pcf) | Moisture (%) | Saturation (%) | Material Description |
|---|---|---|---|---|---|---|---|---|
| 0 | | | | SM | | | | **COLLUVIUM:**<br>@ 0' SILTY SAND, light brown, dry, loose to medium dense.<br>@ ½' As per 0'; reddish brown, damp. |
| | | | | SM/ SC | | | | **WEATHERED GRANITICS:**<br>@ 3' SILTY/CLAYEY SAND, dark brown, moist, medium dense to dense; disintegrates to silty/clayey sand.<br>@ 5' As per 3'; dark grayish brown. |
| 5 | | | | | | | | Total Depth = 15'<br>No Groundwater or Caving Encountered<br>Backfilled 1-22-21 |
| 10 | | | | | | | | |
| 15 | | | | | | | | |
| 20 | | | | | | | | |
| 25 | | | | | | | | |
| 30 | | | | | | | | |

*Standard Penetration Test*
*Undisturbed, Ring Sample*
*Groundwater*
*Seepage*

**GeoSoils, Inc.**

*PLATE* _____

**GeoSoils, Inc.**

# BORING LOG

*PROJECT:* OCEAN BREEZE
5280 W. Lilac Road, Bonsall

*W.O.* 6960-A12-SC *BORING* GW-17 *SHEET* 1 *OF* 1

*DATE EXCAVATED* 1-20-21 *LOGGED BY:* MS *APPROX. ELEV.:* 239'

*SAMPLE METHOD:* BASIN 3B

| Depth (ft.) | Sample: Bulk | Sample: Undisturbed | Sample: Blows/Ft. | USCS Symbol | Dry Unit Wt. (pcf) | Moisture (%) | Saturation (%) | Material Description |
|---|---|---|---|---|---|---|---|---|
| 0 | | | | SM | | | | **COLLUVIUM:**<br>@ 0' SILTY SAND, light reddish brown, dry, loose to medium dense.<br>@ ½' As per 0': reddish brown, moist. |
| 5 | | | | SC<br>SM | | | | **WEATHERED GRANITICS:**<br>@ 4' CLAYEY SAND, dark brown and dark reddish brown, moist, medium dense; disintegrates to clayey sand.<br>@ 6' SILTY SAND, pale olive to light gray, damp, medium dense to dense; brief dike encountered, weathered to gravel-size constituents. |
| 10 | | | | SM | | | | @ 10' As per 6'; SILTY SAND to SAND, |
| 15 | | | | | | | | Total Depth = 15'<br>No Groundwater or Caving Encountered<br>Backfilled 1-22-21 |
| 20 | | | | | | | | |
| 25 | | | | | | | | |
| 30 | | | | | | | | |

▼ *Standard Penetration Test*
⌶ *Undisturbed, Ring Sample*
*Groundwater*
*Seepage*

**GeoSoils, Inc.**

*PLATE* _____

Basin 3B **Percolation Test Data Sheet**

| Project: | Ocean Breeze | Project No: | 6960-A12 | Date: | 1-22-21 |
|---|---|---|---|---|---|
| Test Hole No: | TB-111 | Tested By: | Matt S. | | |
| Depth of Test Hole, $D_T$: | 56" | USCS Soil Classification: | | | |
| Test Hole Dimensions (inches) | | | Length | Width | |
| Diameter (if round)= | 8" | Sides (if rectangular)= | | | |

Sandy Soil Criteria Test*

| Trial No. | Start Time | Stop Time | Time Interval, (min.) | Initial Depth to Water (in.) | Final Depth to Water (in.) | Change in Water Level (in.) | Greater than or Equal to 6"? (y/n) |
|---|---|---|---|---|---|---|---|
| 1 | 8:47 | 9:12 | 25 | 11.00 | 12.25 | 1.25 | N |
| 2 | 9:15 | 9:40 | 25 | 12.25" | 13.00 | 0.75" | N |

*If two consecutive measurements show that six inches of water seeps away in less than 25 minutes, the test shall be run for an additional hour with measurements taken every 10 minutes. Other wise, pre-soak (fill) overnight. Obtain at least twelve measurements per hole over at least six hours (approximately 30 minute intervals) with a precision of at least 0.25".

| Trial No. | Start Time | Stop Time | $\Delta t$ Time Interval (min.) | $D_o$ Initial Depth to Water (in.) | $D_f$ Final Depth to Water (in.) | $\Delta D$ Change in Water Level (in.) | Percolation Rate (min./in.) |
|---|---|---|---|---|---|---|---|
| 1 | 9:40 | 10:10 | 30 | 13.00" | 13.75" | 0.75 | 40 |
| 2 | 10:11 | 10:41 | ↓ | 13.50 | 14.00" | 0.50 | 60 |
| 3 | 10:42 | 11:12 | ↓ | 14.25" | 14.75" | 0.50 | 60 |
| 4 | 11:25 | 11:55 | ↓ | 13.25" | 13.75" | 0.50 | 60 |
| 5 | 11:55 | 12:25 | ↓ | 13.75" | 14.00" | 0.75 | 40 |
| 6 | 12:25 | 12:55 | ↓ | 14.00" | 14.50" | 0.50 | 60 |
| 7 | 12:58 | 1:28 | ↓ | 13.25" | 13.75 | 0.50 | 60 |
| 8 | 1:28 | 1:58 | ↓ | 13.00" | 13.75 | 0.75 | 40 |
| 9 | 1:58 | 2:28 | ↓ | 13.75" | 14.25" | 0.50 | 60 |
| 10 | 2:28 | 2:58 | ↓ | 14.25" | 14.75" | 0.50 | 60 |
| 11 | 2:59 | 3:29 | ↓ | 14.00" | 14.50" | 0.50 | 60 |
| 12 | 3:30 | 4:00 | ↓ | 14.50" | 15.00" | 0.50 | 60 |
| 13 | | | | | | | |
| 14 | | | | | | | |
| 15 | | | | | | | |

1.00 in/hr

COMMENTS:

$K_t = 0.05$ in/hr

Table 5 – Sample Test Data Form for Percolation Test

Basin 3B

## Percolation Test Data Sheet

| | | | | | |
|---|---|---|---|---|---|
| Project: | Ocean Breeze | Project No: | 6960-A12 | Date: | 1-22-21 |
| Test Hole No: | IB-112 | Tested By: | Matt S. | | |
| Depth of Test Hole, $D_T$: | 54" | USCS Soil Classification: | | | |
| Test Hole Dimensions (inches) | | | Length | Width | |
| Diameter (if round)= | 8" | Sides (if rectangular)= | | | |

Sandy Soil Criteria Test*

| Trial No. | Start Time | Stop Time | Time Interval, (min.) | Initial Depth to Water (in.) | Final Depth to Water (in.) | Change in Water Level (in.) | Greater than or Equal to 6"? (y/n) |
|---|---|---|---|---|---|---|---|
| 1 | 8:48 | 9:13 | 25 | 20.25" | 22.50" | 2.25" | N |
| 2 | 9:16 | 9:41 | 25 | 22.50" | 23.75 | 1.25" | N |

*If two consecutive measurements show that six inches of water seeps away in less than 25 minutes, the test shall be run for an additional hour with measurements taken every 10 minutes. Other wise, pre-soak (fill) overnight. Obtain at least twelve measurements per hole over at least six hours (approximately 30 minute intervals) with a precision of at least 0.25".

| Trial No. | Start Time | Stop Time | Δt Time Interval (min.) | $D_o$ Initial Depth to Water (in.) | $D_f$ Final Depth to Water (in.) | ΔD Change in Water Level (in.) | Percolation Rate (min./in.) |
|---|---|---|---|---|---|---|---|
| 1 | 9:41 | 10:11 | 30 | 23.75" | 24.75" | 1.00 | 30 |
| 2 | 10:12 | 10:42 | | 24.75 | 25.50" | 0.75 | 40 |
| 3 | 10:44 | 11:14 | | 25.50 | 26.00" | 0.50 | 60 |
| 4 | 11:25 | 11:55 | | 21.50 | 23.50" | 2.00 | 15 |
| 5 | 11:56 | 12:26 | | 23.75" | 24.50 | 0.75 | 40 |
| 6 | 12:26 | 12:56 | | 24.50 | 25.25 | 0.75 | 40 |
| 7 | 12:58 | 1:28 | | 23.00 | 23.75" | 0.75 | 40 |
| 8 | 1:28 | 1:58 | | 21.00" | 21.75" | 0.75 | 40 |
| 9 | 1:58 | 2:28 | | 23.00" | 23.75 | 0.75 | 40 |
| 10 | 2:28 | 2:58 | | 24.00 | 24.75 | 0.75 | 40 |
| 11 | 2:59 | 3:29 | | 23.00 | 23.75 | 0.75 | 40 |
| 12 | 3:30 | 4:00 | | 23.75 | 24.50 | 0.75 | 40 |
| 13 | | | | | | | |
| 14 | | | | | | | |
| 15 | | | | | | | |

* FILLED TOO HIGH

1.50 in/hr

COMMENTS:

K= 0.09 in/hr

Table 5 – Sample Test Data Form for Percolation Test

County of San Diego

From: Appendix D- Approved Infiltration Rate Assessment Methods

**Basin Name** 3C
**Assumed Infl. Bot. = ±** 236.0 **ft. elv, GW elv=** <223.0 **ft, Cut/Fill** Cut
**USDA Soil** Placentia Sandy Loam
**HSG =** C **, Ksat: narrative (& in/hr)** mod. low - mod. high (0.06 - 0.6 in/hr)
**Geologic Unit:** Qoa

**Table D.1-1: Considerations for Geotechnical Analysis of Infiltration Restrictions**

| Restriction Element | | Is Element Applicable? (Yes/No) |
|---|---|---|
| Mandatory Considerations | BMP is within 100' of Contaminated Soils | NO |
| | BMP is within 100' of Industrial Activities Lacking Source Control | NO |
| | BMP is within 100' of Well/Groundwater Basin | NO |
| | BMP is within 50' of Septic Tanks/Leach Fields | NO |
| | BMP is within 10' of Structures/Tanks/Walls | NO |
| | BMP is within 10' of Sewer Utilities | NO |
| | BMP is within 10' of Groundwater Table | NO |
| | BMP is within Hydric Soils | NO |
| | BMP is within Highly Liquefiable Soils and has Connectivity to Structures | NO |
| | BMP is within 1.5 Times the Height of Adjacent Steep Slopes (≥25%) | NO |
| | County Staff has Assigned "Restricted" Infiltration Category | |
| Optional Considerations | BMP is within Predominantly Type D Soil | NO |
| | BMP is within 10' of Property Line | NO |
| | BMP is within Fill Depths of ≥5' (Existing or Proposed) | NO |
| | BMP is within 10' of Underground Utilities | NO |
| | BMP is within 250' of Ephemeral Stream | NO |
| | Other (Provide detailed geotechnical support) BMP within 10' of Bedrock/Obstruction | NO |
| Result | Based on examination of the best available information, **I have not identified any restrictions above.** | **X Unrestricted** |
| | Based on examination of the best available information, **I have identified one or more restrictions above.** | **Restricted** |

**Table D.2-1: Elements for Determination of Design Infiltration Rates**

| Item | Value | Unit |
|---|---|---|
| Initial Infiltration Rate: Identify per Section D.2.1 in/hr (16.5+39)/2 = | 27.8 | in/hr |
| Corrected Infiltration Rate: Identify per Section D.2.2 in/hr | 1.340 | in/hr |
| Safety Factor: Identify per Section D.2.3 unitless | 2.63 | unitless |
| Design Infiltration Rate: Corrected Infiltration Rate ÷ Safety Factor in/hr | 0.510 | in/hr |

Using USDA maps, if NRCS soil type present within a proposed BMP location, Default design infiltration rates (in/hr) for each NRCS soil type are: A=0.300, B=0.200, C=0.100, D=0.025, Restricted=0.000. Use of these default design infiltration rates does not require application of any correction factors or safety factors.

**Table D.2-3: Determination of Safety Factor**

| Consideration | | Assigned Weight (w) | Factor Value (v) | Product (p) p = w x v |
|---|---|---|---|---|
| Suitability Assessment (A) | Infiltration Testing Method | 0.25 | Refer to Table D.2-4 | 2 x 0.25 |
| | Soil Texture Class | 0.25 | | 2 x 0.25 |
| | Soil Variability | 0.25 | | 1 x 0.25 |
| | Depth to Groundwater/Obstruction | 0.25 | | 1 x 0.25 |
| | Suitability Assessment Safety Factor, $S_A = \Sigma p$ | | | 1.50 |
| Design (B) | Pretreatment | 0.50 | Refer to Table D.2-4 | 2 x 0.50 = 1.00 |
| | Resiliency | 0.25 | | 2 x 0.25 = 0.50 |
| | Compaction | 0.25 | | 1 x 0.25 0.25 |
| | Design Safety Factor, $S_B = \Sigma p$ | | | 1.75 |
| Safety Factor, $S = S_A \times S_B$ (Must be always greater than or equal to 2) | | | | 2.63 |

**GeoSoils, Inc.**

# BORING LOG

*PROJECT:* OCEAN BREEZE
5280 W. Lilac Road, Bonsall

*W.O.* 6960-A12-SC *BORING* IB-113 *SHEET* 1 *OF* 1

*DATE EXCAVATED* 1-20-21 *LOGGED BY:* MS *APPROX. ELEV.:* 240'

*SAMPLE METHOD:* BASIN 3C

| Depth (ft.) | Sample: Bulk | Sample: Undisturbed | Sample: Blows/Ft. | USCS Symbol | Dry Unit Wt. (pcf) | Moisture (%) | Saturation (%) | Material Description |
|---|---|---|---|---|---|---|---|---|
| 0 | | | | SM | | | | **COLLUVIUM:**<br>@ 0' SILTY SAND, light brown, dry, loose to medium dense.<br>@ ½' As per 0'; dark brown, damp to moist, medium dense. |
| 5 | | | | | | | | Total Depth = 5'<br>No Groundwater or Caving Encountered<br>Backfilled 1-22-21 |
| 10 | | | | | | | | |
| 15 | | | | | | | | |
| 20 | | | | | | | | |
| 25 | | | | | | | | |
| 30 | | | | | | | | |

▼ *Standard Penetration Test*
⌶ *Undisturbed, Ring Sample*
▽ *Groundwater*
♀ *Seepage*

**GeoSoils, Inc.**

*PLATE* _____

**GeoSoils, Inc.**

# BORING LOG

*PROJECT:* OCEAN BREEZE
5280 W. Lilac Road, Bonsall

*W.O.* 6960-A12-SC *BORING* IB-114 *SHEET* 1 *OF* 1

*DATE EXCAVATED* 1-20-21 *LOGGED BY:* MS *APPROX. ELEV.:* 240'

*SAMPLE METHOD:* BASIN 3C

| Depth (ft.) | Sample: Bulk | Sample: Undisturbed | Sample: Blows/Ft. | USCS Symbol | Dry Unit Wt. (pcf) | Moisture (%) | Saturation (%) | Material Description |
|---|---|---|---|---|---|---|---|---|
| 0 | | | | SM | | | | **COLLUVIUM:**<br>@ 0' SILTY SAND, light brown, dry, loose to medium dense.<br>@ ½' As per 0'; dark brown, moist, medium dense. |
| 5 | | | | | | | | Total Depth = 5'<br>No Groundwater or Caving Encountered<br>Backfilled 1-22-21 |
| 10 | | | | | | | | |
| 15 | | | | | | | | |
| 20 | | | | | | | | |
| 25 | | | | | | | | |
| 30 | | | | | | | | |

▼ *Standard Penetration Test*
⌶ *Undisturbed, Ring Sample*
▽ *Groundwater*
♀ *Seepage*

**GeoSoils, Inc.**

*PLATE* _____

**GeoSoils, Inc.**

# BORING LOG

*PROJECT:* OCEAN BREEZE
5280 W. Lilac Road, Bonsall

*W.O.* 6960-A12-SC *BORING* GW-18 *SHEET* 1 *OF* 1

*DATE EXCAVATED* 1-20-21 *LOGGED BY:* MS *APPROX. ELEV.:* 238'

*SAMPLE METHOD:* BASIN 3C

| Depth (ft.) | Sample: Bulk | Sample: Undisturbed | Sample: Blows/Ft. | USCS Symbol | Dry Unit Wt. (pcf) | Moisture (%) | Saturation (%) | Material Description |
|---|---|---|---|---|---|---|---|---|
| 0 | | | | SM | | | | **COLLUVIUM:** |
| | | | | | | | | @ 0' SILTY SAND, brown, dry, loose to medium dense; organics. |
| | | | | | | | | @ ½' As per 0': dark brown, damp, medium dense; fine to medium grain sand. |
| 5 | | | | | | | | |
| 10 | | | | SM | | | | **OLDER ALLUVIUM:** |
| | | | | | | | | @ 10' SILTY SAND, brown, damp, medium dense. |
| 15 | | | | | | | | Total Depth = 15' |
| | | | | | | | | No Groundwater or Caving Encountered |
| | | | | | | | | Backfilled 1-22-21 |
| 20 | | | | | | | | |
| 25 | | | | | | | | |
| 30 | | | | | | | | |

▼ *Standard Penetration Test*
⌶ *Undisturbed, Ring Sample*
▽ *Groundwater*
♀ *Seepage*

**GeoSoils, Inc.**

*PLATE* _____

Basin 3C

## Percolation Test Data Sheet

| | | | | | |
|---|---|---|---|---|---|
| Project: | Ocean Breeze | Project No: | 6960-A12 | Date: | 1-22-21 |
| Test Hole No: | IB-113 | Tested By: | Matt S. | | |
| Depth of Test Hole, $D_T$: | 52" | USCS Soil Classification: | | | |
| Test Hole Dimensions (inches) | | | Length | Width | |
| Diameter (if round)= | 8" | Sides (if rectangular)= | | | |

Sandy Soil Criteria Test*

| Trial No. | Start Time | Stop Time | Time Interval, (min.) | Initial Depth to Water (in.) | Final Depth to Water (in.) | Change in Water Level (in.) | Greater than or Equal to 6"? (y/n) |
|---|---|---|---|---|---|---|---|
| 1 | 8:58 | 9:23 | 25 | 15.50 | 23.50" | 8.00 | Y |
| 2 | 9:29 | 9:54 | 25 | 15.00 | 22.50" | 7.50 | Y |

*If two consecutive measurements show that six inches of water seeps away in less than 25 minutes, the test shall be run for an additional hour with measurements taken every 10 minutes. Other wise, pre-soak (fill) overnight. Obtain at least twelve measurements per hole over at least six hours (approximately 30 minute intervals) with a precision of at least 0.25".

| Trial No. | Start Time | Stop Time | $\Delta t$ Time Interval (min.) | $D_o$ Initial Depth to Water (in.) | $D_f$ Final Depth to Water (in.) | $\Delta D$ Change in Water Level (in.) | Percolation Rate (min./in.) |
|---|---|---|---|---|---|---|---|
| 1 | 9:58 | 10:08 | 10 | 15.75" | 19.00" | 3.25 | 3.1 |
| 2 | 10:10 | 10:20 | 10 | 15.25" | 18.75" | 3.50 | 2.9 |
| 3 | 10:23 | 10:33 | 10 | 15.75" | 18.75" | 3.00 | 3.3 |
| 4 | 10:35 | 10:45 | 10 | 14.50" | 17.75" | 3.25 | 3.1 |
| 5 | 10:47 | 10:57 | 10 | 15.75" | 18.50" | 2.75 | 3.6 |
| 6 | 10:59 | 11:09 | 10 | 16.25 | 19.00" | 2.75 | 3.6 |
| 7 | | | | | | | |
| 8 | | | | | | | |
| 9 | | | | | | | |
| 10 | | | | | | | |
| 11 | | | | | | | |
| 12 | | | | | | | |
| 13 | | | | | | | |
| 14 | | | | | | | |
| 15 | | | | | | | |

2.75 x 6 = 16.5 in/hr

COMMENTS:

K = 0.91 in/hr

Table 5 – Sample Test Data Form for Percolation Test

| Basin 3C | Percolation Test Data Sheet | | | | |
|---|---|---|---|---|---|
| Project: | Ocean Breeze | Project No: | 6960-A12 | Date: | 1-22-21 |
| Test Hole No: | IB-114 | Tested By: | Matt S. | | |
| Depth of Test Hole, $D_f$: | 55" | USCS Soil Classification: | | | |
| Test Hole Dimensions (inches) | | | | Length | Width |
| Diameter (if round)= | 8" | Sides (if rectangular)= | | | |

Sandy Soil Criteria Test*

| Trial No. | Start Time | Stop Time | Time Interval, (min.) | Initial Depth to Water (in.) | Final Depth to Water (in.) | Change in Water Level (in.) | Greater than or Equal to 6"? (y/n) |
|---|---|---|---|---|---|---|---|
| 1 | 8:59 | 9:24 | 25 | 9.00" | 22.75" | 13.75" | Y |
| 2 | 9:30 | 9:55 | 25 | 9.50" | 24.00 | 14.50" | Y |

*If two consecutive measurements show that six inches of water seeps away in less than 25 minutes, the test shall be run for an additional hour with measurements taken every 10 minutes. Other wise, pre-soak (fill) overnight. Obtain at least twelve measurements per hole over at least six hours (approximately 30 minute intervals) with a precision of at least 0.25".

| Trial No. | Start Time | Stop Time | $\Delta t$ Time Interval (min.) | $D_o$ Initial Depth to Water (in.) | $D_f$ Final Depth to Water (in.) | $\Delta D$ Change in Water Level (in.) | Percolation Rate (min./in.) |
|---|---|---|---|---|---|---|---|
| 1 | 9:58 | 10:08 | 10 | 8.75" | 17.00 | 8.25 | 1.2 |
| 2 | 10:11 | 10:21 | 10 | 8.50" | 16.25" | 7.75 | 1.3 |
| 3 | 10:23 | 10:33 | 10 | 9.50" | 16.50" | 7.00 | 1.4 |
| 4 | 10:36 | 10:46 | 10 | 8.00" | 14.75" | 6.75 | 1.5 |
| 5 | 10:48 | 10:58 | 10 | 8.50" | 15.00" | 6.50 | 1.54 |
| 6 | 11:00 | 11:10 | 10 | 9.75" | 16.25" | 6.50 | 1.54 |
| 7 | | | | | | | |
| 8 | | | | | | | |
| 9 | | | | | | | |
| 10 | | | | | | | |
| 11 | | | | | | | |
| 12 | | | | | | | |
| 13 | | | | | | | |
| 14 | | | | | | | |
| 15 | | | | | | | |

6.50 x 6 = 39 in/hr

COMMENTS:

K = 1.77 in/hr

Table 5 – Sample Test Data Form for Percolation Test

From: Appendix D- Approved Infiltration Rate Assessment Methods

**Basin Name** 3D
**Assumed Infl. Bot. = ±** 221.5 **ft. elv, GW elv=** <207 **ft, Cut/Fill** Cut
**USDA Soil** Grangeville Fine Sandy Loam/Placentia Sandy Loam
**HSG =** B/C **, Ksat: narrative (& in/hr)** high (1.98-5.95 in/hr)/moderately low to moderately high (0.06 - 0.60 in/hr)
**Geologic Unit:** Qal

**Table D.1-1: Considerations for Geotechnical Analysis of Infiltration Restrictions**

| Restriction Element | | Is Element Applicable? (Yes/No) |
|---|---|---|
| Mandatory Considerations | BMP is within 100' of Contaminated Soils | NO |
| | BMP is within 100' of Industrial Activities Lacking Source Control | NO |
| | BMP is within 100' of Well/Groundwater Basin | YES |
| | BMP is within 50' of Septic Tanks/Leach Fields | NO |
| | BMP is within 10' of Structures/Tanks/Walls | NO |
| | BMP is within 10' of Sewer Utilities | NO |
| | BMP is within 10' of Groundwater Table | NO |
| | BMP is within Hydric Soils | NO |
| | BMP is within Highly Liquefiable Soils and has Connectivity to Structures | YES |
| | BMP is within 1.5 Times the Height of Adjacent Steep Slopes (≥25%) | NO |
| | County Staff has Assigned "Restricted" Infiltration Category | |
| Optional Considerations | BMP is within Predominantly Type D Soil | NO |
| | BMP is within 10' of Property Line | NO |
| | BMP is within Fill Depths of ≥5' (Existing or Proposed) | NO |
| | BMP is within 10' of Underground Utilities | NO |
| | BMP is within 250' of Ephemeral Stream | NO |
| | Other (Provide detailed geotechnical support) BMP within 10' of Bedrock/Obstruction | |
| Result | Based on examination of the best available information, **I have not identified any restrictions above.** | **Unrestricted** |
| | Based on examination of the best available information, **I have identified one or more restrictions above.** | **X Restricted** |

**Table D.2-1: Elements for Determination of Design Infiltration Rates**

| Item | Value | Unit |
|---|---|---|
| Initial Infiltration Rate: Identify per Section D.2.1 in/hr (2+1)/2 = | 1.50 | in/hr |
| Corrected Infiltration Rate: Identify per Section D.2.2 in/hr | 0.081 | in/hr |
| Safety Factor: Identify per Section D.2.3 unitless | Min 2.0 | unitless |
| Design Infiltration Rate: Corrected Infiltration Rate ÷ Safety Factor in/hr | = 0.040 | in/hr |

Using USDA maps, if NRCS soil type present within a proposed BMP location, Default design infiltration rates (in/hr) for each NRCS soil type are: A=0.300, B=0.200, C=0.100, D=0.025, Restricted=0.000. Use of these default design infiltration rates does not require application of any correction factors or safety factors.

**Table D.2-3: Determination of Safety Factor**

| Consideration | | Assigned Weight (w) | Factor Value (v) | Product (p) p = w x v |
|---|---|---|---|---|
| Suitability Assessment (A) | Infiltration Testing Method | 0.25 | Refer to Table D.2-4 | 2 x 0.25 |
| | Soil Texture Class | 0.25 | | 2 x 0.25 |
| | Soil Variability | 0.25 | | 2 x 0.25 |
| | Depth to Groundwater/Obstruction | 0.25 | | 1 x 0.25 |
| | Suitability Assessment Safety Factor, $S_A = \Sigma p$ | | | 1.75 |
| Design (B) | Pretreatment | 0.50 | Refer to Table D.2-4 | |
| | Resiliency | 0.25 | | |
| | Compaction | 0.25 | | |
| | Design Safety Factor, $S_B = \Sigma p$ | | | |
| Safety Factor, $S = S_A \times S_B$ (Must be always greater than or equal to 2) | | | | Min 2.0 |

**GeoSoils, Inc.**

# BORING LOG

*PROJECT:* OCEAN BREEZE
5280 W. Lilac Road, Bonsall

*W.O.* 6960-A12-SC *BORING* IB-115 *SHEET* 1 *OF* 1

*DATE EXCAVATED* 1-21-21 *LOGGED BY:* TMP *APPROX. ELEV.:* 222'

*SAMPLE METHOD:* BASIN 3D

| Depth (ft.) | Sample: Bulk | Sample: Undisturbed | Sample: Blows/Ft. | USCS Symbol | Dry Unit Wt. (pcf) | Moisture (%) | Saturation (%) | Material Description |
|---|---|---|---|---|---|---|---|---|
| 0 | | | | SM | | | | **COLLUVIUM/TOPSOIL:** @ 0' SILTY SAND, yellowish light brown, damp, medium dense; fine to coarse grained. |
| | | | | | | | | **ALLUVIUM:** @ 3' SILTY SAND, light yellowish light brown, damp, medium dense; fine to medium sands. |
| 5 | | | | SM | | | | @ 5' Partially cemented. |
| | | | | | | | | Total Depth = 5' |
| | | | | | | | | No Groundwater or Caving Encountered |
| | | | | | | | | Backfilled 1-25-21 |
| 10 | | | | | | | | |
| 15 | | | | | | | | |
| 20 | | | | | | | | |
| 25 | | | | | | | | |
| 30 | | | | | | | | |

▼ *Standard Penetration Test*
⌶ *Undisturbed, Ring Sample*
▽ *Groundwater*
♀ *Seepage*

**GeoSoils, Inc.**

*PLATE* _____

**GeoSoils, Inc.**

# BORING LOG

*PROJECT:* OCEAN BREEZE
5280 W. Lilac Road, Bonsall

*W.O.* 6960-A12-SC *BORING* IB-116 *SHEET* 1 *OF* 1

*DATE EXCAVATED* 1-21-21 *LOGGED BY:* TMP *APPROX. ELEV.:* 222'

*SAMPLE METHOD:* BASIN 3D

| Depth (ft.) | Sample: Bulk | Sample: Undisturbed | Sample: Blows/Ft. | USCS Symbol | Dry Unit Wt. (pcf) | Moisture (%) | Saturation (%) | Material Description |
|---|---|---|---|---|---|---|---|---|
| 0 | | | | SM | | | | **COLLUVIUM/TOPSOIL:** @ 0' SILTY SAND, yellowish light brown, damp, medium dense; fine to coarse grained. |
| | | | | SM | | | | **ALLUVIUM:** @ 3' SILTY SAND, light yellowish light brown, damp, medium dense; fine to medium grained. |
| 5 | | | | | | | | Total Depth = 5'<br>No Groundwater or Caving Encountered<br>Backfilled 1-25-21 |
| 10 | | | | | | | | |
| 15 | | | | | | | | |
| 20 | | | | | | | | |
| 25 | | | | | | | | |
| 30 | | | | | | | | |

*Standard Penetration Test*
*Undisturbed, Ring Sample*
*Groundwater*
*Seepage*

**GeoSoils, Inc.**

*PLATE* _____

**GeoSoils, Inc.**

# BORING LOG

*PROJECT:* OCEAN BREEZE
5280 W. Lilac Road, Bonsall

*W.O.* 6960-A12-SC *BORING* GW-19 *SHEET* 1 *OF* 1

*DATE EXCAVATED* 1-21-21 *LOGGED BY:* TMP *APPROX. ELEV.:* 222'

*SAMPLE METHOD:* BASIN 3D

| Depth (ft.) | Sample: Bulk | Sample: Undisturbed | Sample: Blows/Ft. | USCS Symbol | Dry Unit Wt. (pcf) | Moisture (%) | Saturation (%) | Material Description |
|---|---|---|---|---|---|---|---|---|
| 0 | | | | SM | | | | **COLLUVIUM/TOPSOIL:** @ 0' SILTY SAND, yellowish light brown, damp, medium dense, fine to coarse grained. |
| | | | | SM | | | | **ALLUVIUM:** @ 3' SILTY SAND, light yellowish light brown, damp, medium dense to dense; fine to coarse grained, gravel to $\frac{3}{8}$" diameter. |
| 5 | | | | SC | | | | **OLDER ALLUVIUM:** @ 5' CLAYEY SAND, grayish brown, moist, dense. |
| 10 | | | | | | | | @ 12' SILTY SAND, grayish brown, moist, damp. |
| 15 | | | | | | | | Total Depth = 15'<br>No Groundwater or Caving Encountered<br>Backfilled 1-25-21 |
| 20 | | | | | | | | |
| 25 | | | | | | | | |
| 30 | | | | | | | | |

▼ *Standard Penetration Test*
⌶ *Undisturbed, Ring Sample*
▽ *Groundwater*
♀ *Seepage*

**GeoSoils, Inc.**

*PLATE* _____

BASIN 3D

## Percolation Test Data Sheet

| | | | | | |
|---|---|---|---|---|---|
| Project: | Ocean Breeze | Project No: | 6960-A12 | Date: | 1-25-21 |
| Test Hole No: | JB-115 | Tested By: | Matt S. | | |
| Depth of Test Hole, $D_T$: | 54" | USCS Soil Classification: | | | |
| Test Hole Dimensions (inches) | | | Length | Width | |
| Diameter (if round)= | 8" | Sides (if rectangular)= | | | |

Sandy Soil Criteria Test*

| Trial No. | Start Time | Stop Time | Time Interval, (min.) | Initial Depth to Water (in.) | Final Depth to Water (in.) | Change in Water Level (in.) | Greater than or Equal to 6"? (y/n) |
|---|---|---|---|---|---|---|---|
| 1 | 8:46 | 9:11 | 25 | 16.00 | 17.75 | 1.75" | N |
| 2 | 9:14 | 9:39 | 25 | 13.00" | 15.25" | 2.25" | N |

*If two consecutive measurements show that six inches of water seeps away in less than 25 minutes, the test shall be run for an additional hour with measurements taken every 10 minutes. Other wise, pre-soak (fill) overnight. Obtain at least twelve measurements per hole over at least six hours (approximately 30 minute intervals) with a precision of at least 0.25".

| Trial No. | Start Time | Stop Time | $\Delta t$ Time Interval (min.) | $D_o$ Initial Depth to Water (in.) | $D_f$ Final Depth to Water (in.) | $\Delta D$ Change in Water Level (in.) | Percolation Rate (min./in.) |
|---|---|---|---|---|---|---|---|
| 1 | 9:39 | 10:09 | 30 | 15.25" | 17.00" | 1.75 | 17.1 |
| 2 | 10:09 | 10:39 | ↓ | 17.00" | 18.25" | 1.25 | 24 |
| 3 | 10:39 | 11:09 | | 18.25" | 19.25" | 1.00 | 30 |
| 4 | 11:09 | 11:39 | | 19.25" | 20.00" | 0.75" | 40 |
| 5 | 11:39 | 12:09 | | 20.00" | 21.00 | 1.00 | 30 |
| 6 | 12:09 | 12:39 | | 21.00" | 22.00" | 1.00 | 30 |
| 7 | 12:41 | 1:11 | | 15.00" | 16.00" | 1.00 | 30 |
| 8 | 1:11 | 1:41 | | 16.00" | 17.00" | 1.00 | 30 |
| 9 | 1:41 | 2:11 | | 17.00" | 18.00" | 1.00 | 30 |
| 10 | 2:11 | 2:41 | | 18.00 | 19.00" | 1.00 | 30 |
| 11 | 2:41 | 3:11 | | 19.00" | 20.00" | 1.00 | 30 |
| 12 | 3:11 | 3:41 | ↓ | 20.00" | 21.00" | 1.00 | 30 |
| 13 | | | | | | | |
| 14 | | | | | | | |
| 15 | | | | | | | |

2.00 in/hr

COMMENTS: light sprinklers throughout day

$K = 0.11$ in/hr

Table 5 – Sample Test Data Form for Percolation Test

Basin 3D

## Percolation Test Data Sheet

| | | | | | |
|---|---|---|---|---|---|
| Project: | Ocean Breeze | Project No: | 6960-A12 | Date: | 1-25-21 |
| Test Hole No: | IB-116 | Tested By: | Matt S. | | |
| Depth of Test Hole, $D_T$: | 56" | USCS Soil Classification: | | | |
| Test Hole Dimensions (inches) | | | Length | Width | |
| Diameter (if round)= | 8" | Sides (if rectangular)= | | | |

Sandy Soil Criteria Test*

| Trial No. | Start Time | Stop Time | Time Interval, (min.) | Initial Depth to Water (in.) | Final Depth to Water (in.) | Change in Water Level (in.) | Greater than or Equal to 6"? (y/n) |
|---|---|---|---|---|---|---|---|
| 1 | 8:47 | 9:12 | 25 | 11.25" | 12.50" | 1.25" | N |
| 2 | 9:14 | 9:39 | 25 | 11.00" | 11.75" | 0.75 | N |

*If two consecutive measurements show that six inches of water seeps away in less than 25 minutes, the test shall be run for an additional hour with measurements taken every 10 minutes. Other wise, pre-soak (fill) overnight. Obtain at least twelve measurements per hole over at least six hours (approximately 30 minute intervals) with a precision of at least 0.25".

| Trial No. | Start Time | Stop Time | Δt Time Interval (min.) | $D_o$ Initial Depth to Water (in.) | $D_f$ Final Depth to Water (in.) | ΔD Change in Water Level (in.) | Percolation Rate (min./in.) |
|---|---|---|---|---|---|---|---|
| 1 | 9:39 | 10:09 | 30 | 11.75" | 13.00" | 1.25 | 24 |
| 2 | 10:09 | 10:34 | | 13.00" | 14.25" | 1.25 | 24 |
| 3 | 10.39 | 11:09 | | 14.25" | 15.25" | 1.00 | 30 |
| 4 | 11:09 | 11:39 | | 15.25" | 16.00" | 0.75 | 40 |
| 5 | 11:39 | 12:09 | | 16.00" | 16.50" | 0.50 | 60 |
| 6 | 12:09 | 12:39 | | 16.50" | 17.00" | 0.50" | 60 |
| 7 | 12:41 | 1:11 | | 13.00" | 14.25" | 1.00" | 36 |
| 8 | 1:11 | 1:41 | | 14.25" | 14.75" | 0.75" | 40 |
| 9 | 1:41 | 2:11 | | 14.75" | 15.50" | 0.75" | 40 |
| 10 | 2:11 | 2:41 | | 15.50" | 16.00" | 0.50" | 60 |
| 11 | 2:41 | 3:41 | | 16.00" | 16.50" | 0.50" | 60 |
| 12 | 3:11 | 3:41 | | 16.50" | 17.00" | 0.50" | 60 |
| 13 | | | | | | | |
| 14 | | | | | | | |
| 15 | | | | | | | |

1.00 in/hr

COMMENTS:

K= 0.05 in/hr

Table 5 – Sample Test Data Form for Percolation Test

County of San Diego

From: Appendix D- Approved Infiltration Rate Assessment Methods

**Basin Name** 3E
**Assumed Infl. Bot. = ±** 224.0 **ft. elv, GW elv=** <215.0 **ft, Cut/Fill** Cut
**USDA Soil** Ramona Sandy Loam
**HSG =** C **, Ksat: narrative (& in/hr)** Moderately high (0.20-0.57 in/hr)
**Geologic Unit:** Qoa

**Table D.1-1: Considerations for Geotechnical Analysis of Infiltration Restrictions**

| Restriction Element | | Is Element Applicable? (Yes/No) |
|---|---|---|
| Mandatory Considerations | BMP is within 100' of Contaminated Soils | NO |
| | BMP is within 100' of Industrial Activities Lacking Source Control | NO |
| | BMP is within 100' of Well/Groundwater Basin | NO |
| | BMP is within 50' of Septic Tanks/Leach Fields | NO |
| | BMP is within 10' of Structures/Tanks/Walls | NO |
| | BMP is within 10' of Sewer Utilities | NO |
| | BMP is within 10' of Groundwater Table | YES |
| | BMP is within Hydric Soils | NO |
| | BMP is within Highly Liquefiable Soils and has Connectivity to Structures | NO |
| | BMP is within 1.5 Times the Height of Adjacent Steep Slopes (≥25%) | NO |
| | County Staff has Assigned "Restricted" Infiltration Category | |
| Optional Considerations | BMP is within Predominantly Type D Soil | NO |
| | BMP is within 10' of Property Line | NO |
| | BMP is within Fill Depths of ≥5' (Existing or Proposed) | NO |
| | BMP is within 10' of Underground Utilities | NO |
| | BMP is within 250' of Ephemeral Stream | NO |
| | Other (Provide detailed geotechnical support) BMP within 10' of Bedrock/Obstruction | |
| Result | Based on examination of the best available information, **I have not identified any restrictions above.** | **Unrestricted** |
| | Based on examination of the best available information, **I have identified one or more restrictions above.** | **X Restricted** |

**Table D.2-1: Elements for Determination of Design Infiltration Rates**

| Item | | Value | Unit |
|---|---|---|---|
| Initial Infiltration Rate: Identify per Section D.2.1 in/hr | (0.5+0.5)/2 = | 0.50 | in/hr |
| Corrected Infiltration Rate: Identify per Section D.2.2 in/hr | | 0.024 | in/hr |
| Safety Factor: Identify per Section D.2.3 unitless | | Min 2.0 | unitless |
| Design Infiltration Rate: Corrected Infiltration Rate ÷ Safety Factor in/hr | | use default 0.100 | in/hr |

Using USDA maps, if NRCS soil type present within a proposed BMP location, Default design infiltration rates (in/hr) for each NRCS soil type are: A=0.300, B=0.200, C=0.100, D=0.025, Restricted=0.000. Use of these default design infiltration rates does not require application of any correction factors or safety factors.

**Table D.2-3: Determination of Safety Factor**

| Consideration | | Assigned Weight (w) | Factor Value (v) | Product (p) p = w x v |
|---|---|---|---|---|
| Suitability Assessment (A) | Infiltration Testing Method | 0.25 | Refer to Table D.2-4 | 2 x 0.25 |
| | Soil Texture Class | 0.25 | | 2 x 0.25 |
| | Soil Variability | 0.25 | | 2 x 0.25 |
| | Depth to Groundwater/Obstruction | 0.25 | | 1 x 0.25 |
| | Suitability Assessment Safety Factor, $S_A = \Sigma p$ | | | 1.75 |
| Design (B) | Pretreatment | 0.50 | Refer to Table D.2-4 | |
| | Resiliency | 0.25 | | |
| | Compaction | 0.25 | | |
| | Design Safety Factor, $S_B = \Sigma p$ | | | |
| Safety Factor, $S = S_A \times S_B$ (Must be always greater than or equal to 2) | | | | Min 2.0 |

**GeoSoils, Inc.**

# BORING LOG

*PROJECT:* OCEAN BREEZE
5280 W. Lilac Road, Bonsall

*W.O.* 6960-A12-SC *BORING* IB-117 *SHEET* 1 *OF* 1

*DATE EXCAVATED* 1-21-21 *LOGGED BY:* TMP *APPROX. ELEV.:* 232'

*SAMPLE METHOD:* BASIN 3E

| Depth (ft.) | Sample: Bulk | Sample: Undisturbed | Sample: Blows/Ft. | USCS Symbol | Dry Unit Wt. (pcf) | Moisture (%) | Saturation (%) | Material Description |
|---|---|---|---|---|---|---|---|---|
| 0 | | | | SM | | | | **COLLUVIUM/TOPSOIL:** @ 0' SILTY SAND, reddish brown, damp, medium dense. |
| | | | | SM | | | | **ALLUVIUM:** @ 2' SILTY SAND, reddish brown, damp, dense; fine coarse grained, occasional clayey sand. |
| | | | | ML | | | | **OLDER ALLUVIUM:** @ 3.5' Slightly CLAYEY SANDY SILT, olive light brown, damp to moist, medium stiff, partially cemented. |
| 5 | | | | | | | | Total Depth = 5'<br>No Groundwater or Caving Encountered<br>Backfilled 1-25-20 |
| 10 | | | | | | | | |
| 15 | | | | | | | | |
| 20 | | | | | | | | |
| 25 | | | | | | | | |
| 30 | | | | | | | | |

*Standard Penetration Test*
*Undisturbed, Ring Sample*
*Groundwater*
*Seepage*

**GeoSoils, Inc.**

*PLATE* _____

**GeoSoils, Inc.**

# BORING LOG

*PROJECT:* OCEAN BREEZE
5280 W. Lilac Road, Bonsall

*W.O.* 6960-A12-SC *BORING* IB-118 *SHEET* 1 *OF* 1

*DATE EXCAVATED* 1-21-21 *LOGGED BY:* TMP *APPROX. ELEV.:* 232'

*SAMPLE METHOD:* BASIN 3E

| Depth (ft.) | Sample: Bulk | Sample: Undisturbed | Sample: Blows/Ft. | USCS Symbol | Dry Unit Wt. (pcf) | Moisture (%) | Saturation (%) | Material Description |
|---|---|---|---|---|---|---|---|---|
| 0 | | | | SC | | | | **COLLUVIUM/TOPSOIL:** @ 0' Slightly CLAYEY SAND, dark reddish brown, moist, medium dense. |
| | | | | SM<br>ML | | | | **OLDER ALLUVIUM:** @ 3' SILTY SAND, reddish brown, damp, dense; fine to coarse grained. @ 3½' SANDY SILT, olive brown, moist, stiff; partially cemented. |
| 5 | | | | | | | | Total Depth = 5'<br>No Groundwater or Caving Encountered<br>Backfilled 1-25-20 |
| 10 | | | | | | | | |
| 15 | | | | | | | | |
| 20 | | | | | | | | |
| 25 | | | | | | | | |
| 30 | | | | | | | | |

*Standard Penetration Test*
*Undisturbed, Ring Sample*
*Groundwater*
*Seepage*

**GeoSoils, Inc.**

*PLATE* _____

**GeoSoils, Inc.**

# BORING LOG

*PROJECT:* OCEAN BREEZE
5280 W. Lilac Road, Bonsall

*W.O.* 6960-A12-SC *BORING* GW-20 *SHEET* 1 *OF* 1

*DATE EXCAVATED* 1-21-21 *LOGGED BY:* TMP *APPROX. ELEV.:* 230'

*SAMPLE METHOD:* BASIN 3E

| Depth (ft.) | Sample: Bulk | Sample: Undisturbed | Sample: Blows/Ft. | USCS Symbol | Dry Unit Wt. (pcf) | Moisture (%) | Saturation (%) | Material Description |
|---|---|---|---|---|---|---|---|---|
| 0 | | | | SC | | | | **COLLUVIUM/TOPSOIL:** @ 0' Slightly CLAYEY SAND, dark reddish brown, moist, medium dense. |
| | | | | SM | | | | **OLDER ALLUVIUM:** @ 2' SILTY SAND, reddish brown, damp, dense; fine to coarse sands. |
| | | | | ML | | | | @ 4' SANDY SILT, olive light brown, moist, stiff. |
| 5 | | | | | | | | |
| | | | | SM | | | | @ 8' SILTY SAND, reddish brown, damp, dense; becomes olive and brown. |
| 10 | | | | | | | | |
| | | | | | | | | @ 12' As per 8'; light reddish brown. |
| 15 | | | | | | | | Total Depth = 15'<br>No Groundwater or Caving Encountered<br>Backfilled 1-25-21 |
| 20 | | | | | | | | |
| 25 | | | | | | | | |
| 30 | | | | | | | | |

▼ *Standard Penetration Test*
⌶ *Undisturbed, Ring Sample*
▽ *Groundwater*
♀ *Seepage*

**GeoSoils, Inc.**

*PLATE* _____

Basin 3E

## Percolation Test Data Sheet

| Project: | Ocean Breeze | Project No: | 6960-A12 | Date: | 1-25-20 |
|---|---|---|---|---|---|
| Test Hole No: | TB-117 | Tested By: | Matt S. | | |
| Depth of Test Hole, $D_T$: | 56" | USCS Soil Classification: | | | |
| Test Hole Dimensions (inches) | | | Length | Width | |
| Diameter (if round)= | 8" | Sides (if rectangular)= | | | |

Sandy Soil Criteria Test*

| Trial No. | Start Time | Stop Time | Time Interval, (min.) | Initial Depth to Water (in.) | Final Depth to Water (in.) | Change in Water Level (in.) | Greater than or Equal to 6"? (y/n) |
|---|---|---|---|---|---|---|---|
| 1 | 9:00 | 9:25 | 25 | 14.00" | 15.00" | 1.00 | N |
| 2 | 9:25 | 9:50 | 25 | 15.00" | 15.50" | 0.50 | N |

*If two consecutive measurements show that six inches of water seeps away in less than 25 minutes, the test shall be run for an additional hour with measurements taken every 10 minutes. Other wise, pre-soak (fill) overnight. Obtain at least twelve measurements per hole over at least six hours (approximately 30 minute intervals) with a precision of at least 0.25".

| Trial No. | Start Time | Stop Time | $\Delta t$ Time Interval (min.) | $D_o$ Initial Depth to Water (in.) | $D_f$ Final Depth to Water (in.) | $\Delta D$ Change in Water Level (in.) | Percolation Rate (min./in.) |
|---|---|---|---|---|---|---|---|
| 1 | 9:50 | 10:20 | 30 | 15.50" | 16.00 | 0.50 | 60 |
| 2 | 10:20 | 10:50 | 1 | 16.00" | 16.25" | 0.25 | 120 |
| 3 | 10.50 | 11:20 | 1 | 16.25" | 16.50" | 0.25 | 120 |
| 4 | 11:20 | 11:50 | 1 | 16.50" | 16.75 | 0.25 | 120 |
| 5 | 11:50 | 12:20 | 1 | 16.75" | 17.25 | 0.50 | 60 |
| 6 | 12:20 | 12:50 | 1 | 17.25 | 17.50" | 0.25 | 120 |
| 7 | 12:52 | 1:22 | 1 | 14.50" | 14.75" | 0.25 | 120 |
| 8 | 1:22 | 1:52 | 1 | 14.75" | 15.00" | 0.25 | 120 |
| 9 | 1:52 | 2:22 | 1 | 15.00" | 15.50" | 0.50 | 60 |
| 10 | 2:22 | 2:52 | 1 | 15.50" | 15.75" | 0.25 | 120 |
| 11 | 2:52 | 3:22 | 1 | 15.75 | 16.00" | 0.25 | 120 |
| 12 | 3:22 | 3:52 | 1 | 16.00" | 16.25" | 0.25 | 120 |
| 13 | | | | | | | |
| 14 | | | | | | | |
| 15 | | | | | | | |

0.50in/hr

COMMENTS:

$K = 0.02$ in/hr

Table 5 – Sample Test Data Form for Percolation Test

Basin 3E

## Percolation Test Data Sheet

| | | | | | |
|---|---|---|---|---|---|
| Project: | Ocean Breeze | Project No: | 6960-A12 | Date: | 1-25-20 |
| Test Hole No: | IB-118 | Tested By: | Matt S. | | |
| Depth of Test Hole, $D_i$: | 52" | USCS Soil Classification: | | | |
| Test Hole Dimensions (inches) | | | Length | Width | |
| Diameter (if round)= | 8" | Sides (if rectangular)= | | | |

Sandy Soil Criteria Test*

| Trial No. | Start Time | Stop Time | Time Interval, (min.) | Initial Depth to Water (in.) | Final Depth to Water (in.) | Change in Water Level (in.) | Greater than or Equal to 6"? (y/n) |
|---|---|---|---|---|---|---|---|
| 1 | 9:01 | 9:26 | 25 | 8.50" | 9.00 | 0.50 | N |
| 2 | 9:26 | 9:51 | 25 | 9.00 | 9.50" | 0.50 | N |

*If two consecutive measurements show that six inches of water seeps away in less than 25 minutes, the test shall be run for an additional hour with measurements taken every 10 minutes. Other wise, pre-soak (fill) overnight. Obtain at least twelve measurements per hole over at least six hours (approximately 30-minute intervals) with a precision of at least 0.25".

| Trial No. | Start Time | Stop Time | $\Delta t$ Time Interval (min.) | $D_o$ Initial Depth to Water (in.) | $D_f$ Final Depth to Water (in.) | $\Delta D$ Change in Water Level (in.) | Percolation Rate (min./in.) |
|---|---|---|---|---|---|---|---|
| 1 | 9:50 | 10:20 | 30 | 9.50" | 9.75" | 0.25 | 120 |
| 2 | 10:20 | 10:50 | ↓ | 9.75" | 10.00" | 0.25 | 126 |
| 3 | 10:50 | 11:20 | | 10.00" | 10.25" | 0.25 | 120 |
| 4 | 11:20 | 11:50 | | 10.25" | 10.50" | 0.25 | 120 |
| 5 | 11:50 | 12:20 | | 10.50" | 10.75" | 0.25 | 120 |
| 6 | 12:20 | 12:50 | | 10.75" | 11.00" | 0.25 | 120 |
| 7 | 12:53 | 1:23 | | 9.50" | 9.75" | 0.25 | 120 |
| 8 | 1:23 | 1:53 | | 9.75" | 10.00 | 0.25 | 120 |
| 9 | 1:53 | 2:23 | | 10.00" | 10.25" | 0.25 | 120 |
| 10 | 2:23 | 2:53 | | 10.25" | 10.50" | 0.25 | 120 |
| 11 | 2:53 | 3:23 | | 10.50" | 10.75" | 0.25 | 120 |
| 12 | 3:23 | 3:53 | ↓ | 10.75" | 11.00" | 0.25 | 120 |
| 13 | | | | | | | |
| 14 | | | | | | | |
| 15 | | | | | | | |

0.50 in/hr

COMMENTS:

K= 0.02 in/hr

Table 5 – Sample Test Data Form for Percolation Test

County of San Diego

From: Appendix D- Approved Infiltration Rate Assessment Methods

**Basin Name** 3F
**Assumed Infl. Bot. = ±** 223.0 **ft. elv, GW elv=** <207.0 **ft, Cut/Fill** Cut
**USDA Soil** Tujunga Sand
**HSG =** A **, Ksat: narrative (& in/hr)** very high (5.5 - 19.98 ft/in)
**Geologic Unit:** Qal

**Table D.1-1: Considerations for Geotechnical Analysis of Infiltration Restrictions**

| Restriction Element | | Is Element Applicable? (Yes/No) |
|---|---|---|
| Mandatory Considerations | BMP is within 100' of Contaminated Soils | NO |
| | BMP is within 100' of Industrial Activities Lacking Source Control | NO |
| | BMP is within 100' of Well/Groundwater Basin | YES |
| | BMP is within 50' of Septic Tanks/Leach Fields | NO |
| | BMP is within 10' of Structures/Tanks/Walls | NO |
| | BMP is within 10' of Sewer Utilities | NO |
| | BMP is within 10' of Groundwater Table | NO |
| | BMP is within Hydric Soils | NO |
| | BMP is within Highly Liquefiable Soils and has Connectivity to Structures | YES |
| | BMP is within 1.5 Times the Height of Adjacent Steep Slopes (≥25%) | NO |
| | County Staff has Assigned "Restricted" Infiltration Category | |
| Optional Considerations | BMP is within Predominantly Type D Soil | NO |
| | BMP is within 10' of Property Line | NO |
| | BMP is within Fill Depths of ≥5' (Existing or Proposed) | NO |
| | BMP is within 10' of Underground Utilities | NO |
| | BMP is within 250' of Ephemeral Stream | NO |
| | Other (Provide detailed geotechnical support) BMP within 10' of Bedrock/Obstruction | |
| Result | Based on examination of the best available information, **I have not identified any restrictions above.** | **Unrestricted** |
| | Based on examination of the best available information, **I have identified one or more restrictions above.** | **X Restricted** |

**Table D.2-1: Elements for Determination of Design Infiltration Rates**

| Item | Value | Unit |
|---|---|---|
| Initial Infiltration Rate: Identify per Section D.2.1 in/hr (150+84)/2 = | 117 | in/hr |
| Corrected Infiltration Rate: Identify per Section D.2.2 in/hr | 17.714 | in/hr |
| Safety Factor: Identify per Section D.2.3 unitless | Min 2.0 | unitless |
| Design Infiltration Rate: Corrected Infiltration Rate ÷ Safety Factor in/hr | K = 8.857 | in/hr |

Using USDA maps, if NRCS soil type present within a proposed BMP location, Default design infiltration rates (in/hr) for each NRCS soil type are: A=0.300, B=0.200, C=0.100, D=0.025, Restricted=0.000. Use of these default design infiltration rates does not require application of any correction factors or safety factors.

**Table D.2-3: Determination of Safety Factor**

| Consideration | | Assigned Weight (w) | Factor Value (v) | Product (p) p = w x v |
|---|---|---|---|---|
| Suitability Assessment (A) | Infiltration Testing Method | 0.25 | Refer to Table D.2-4 | 2 x 0.25 |
| | Soil Texture Class | 0.25 | | 1 x 0.25 |
| | Soil Variability | 0.25 | | 2 x 0.25 |
| | Depth to Groundwater/Obstruction | 0.25 | | 1 x 0.25 |
| | Suitability Assessment Safety Factor, $S_A = \Sigma p$ | | | 1.50 |
| Design (B) | Pretreatment | 0.50 | Refer to Table D.2-4 | |
| | Resiliency | 0.25 | | |
| | Compaction | 0.25 | | |
| | Design Safety Factor, $S_B = \Sigma p$ | | | |
| Safety Factor, $S = S_A \times S_B$ (Must be always greater than or equal to 2) | | | | Min 2.0 |

**GeoSoils, Inc.**

# BORING LOG

*PROJECT:* OCEAN BREEZE
5280 W. Lilac Road, Bonsall

*W.O.* 6960-A12-SC *BORING* IB-119 *SHEET* 1 *OF* 1

*DATE EXCAVATED* 1-21-21 *LOGGED BY:* TMP *APPROX. ELEV.:* 222'

*SAMPLE METHOD:* BASIN 3F

| Depth (ft.) | Sample: Bulk | Sample: Undisturbed | Sample: Blows/Ft. | USCS Symbol | Dry Unit Wt. (pcf) | Moisture (%) | Saturation (%) | Material Description |
|---|---|---|---|---|---|---|---|---|
| 0 | | | | SM | | | | **COLLUVIUM/TOPSOIL:** @ 0' SILTY SAND/SAND, light brown, damp, medium dense. |
| | | | | SP | | | | **ALLUVIUM:** @ 3' SAND, olive brown, damp, loose to medium dense. |
| 5 | | | | | | | | Total Depth = 5'<br>No Groundwater or Caving Encountered<br>Backfilled 1-26-21 |
| 10 | | | | | | | | |
| 15 | | | | | | | | |
| 20 | | | | | | | | |
| 25 | | | | | | | | |
| 30 | | | | | | | | |

*Standard Penetration Test*
*Undisturbed, Ring Sample*
*Groundwater*
*Seepage*

**GeoSoils, Inc.**

*PLATE* _____

**GeoSoils, Inc.**

# BORING LOG

*PROJECT:* OCEAN BREEZE
5280 W. Lilac Road, Bonsall

*W.O.* 6960-A12-SC *BORING* IB-120 *SHEET* 1 *OF* 1

*DATE EXCAVATED* 1-21-21 *LOGGED BY:* TMP *APPROX. ELEV.:* 222'

*SAMPLE METHOD:* BASIN 3F

| Depth (ft.) | Sample: Bulk | Sample: Undisturbed | Sample: Blows/Ft. | USCS Symbol | Dry Unit Wt. (pcf) | Moisture (%) | Saturation (%) | Material Description |
|---|---|---|---|---|---|---|---|---|
| 0 | | | | SM | | | | **COLLUVIUM/TOPSOIL:** @ 0' SILTY SAND, olive brown, damp, medium dense. |
| | | | | SP | | | | **ALLUVIUM:** @ 3' SAND, gray, dry, loose; fine to medium grained. |
| 5 | | | | | | | | Total Depth = 5'<br>No Groundwater or Caving Encountered<br>Backfilled 1-26-21 |
| 10 | | | | | | | | |
| 15 | | | | | | | | |
| 20 | | | | | | | | |
| 25 | | | | | | | | |
| 30 | | | | | | | | |

*Standard Penetration Test*
*Undisturbed, Ring Sample*
*Groundwater*
*Seepage*

**GeoSoils, Inc.**

*PLATE* _____

**GeoSoils, Inc.**

# BORING LOG

*PROJECT:* OCEAN BREEZE
5280 W. Lilac Road, Bonsall

*W.O.* 6960-A12-SC *BORING* GW-21 *SHEET* 1 *OF* 1

*DATE EXCAVATED* 1-21-21 *LOGGED BY:* TMP *APPROX. ELEV.:* 222'

*SAMPLE METHOD:* BASIN 3F

| Depth (ft.) | Sample: Bulk | Sample: Undisturbed | Sample: Blows/Ft. | USCS Symbol | Dry Unit Wt. (pcf) | Moisture (%) | Saturation (%) | Material Description |
|---|---|---|---|---|---|---|---|---|
| 0 | | | | SM | | | | **COLLUVIUM/TOPSOIL:** |
| | | | | | | | | @ 0' SILTY SAND, olive brown, damp, medium dense. |
| | | | | SP | | | | **ALLUVIUM:** |
| 5 | | | | | | | | @ 3' SAND, gray, dry, loose; micaceous, fine to medium sands. |
| | | | | | | | | @ 7' dry to damp. |
| | | | | | | | | @ 8' moist. |
| 10 | | | | | | | | |
| | | | | SW | | | | @ 12' very moist to saturated; very coarse sands. |
| 15 | | | | | | | | Total Depth = 15' |
| | | | | | | | | No Groundwater or Caving Encountered |
| | | | | | | | | Backfilled 1-26-21 |
| 20 | | | | | | | | |
| 25 | | | | | | | | |
| 30 | | | | | | | | |

▼ *Standard Penetration Test*
⌶ *Undisturbed, Ring Sample*
▽ *Groundwater*
♀ *Seepage*

**GeoSoils, Inc.**

*PLATE* _____

Basin 3F **Percolation Test Data Sheet**

| | | | | | |
|---|---|---|---|---|---|
| Project: | Ocean Breeze | Project No: | 6960-A12 | Date: | 1-26-20 |
| Test Hole No: | IB-119 | Tested By: | Matt S. | | |
| Depth of Test Hole, $D_H$: | 40" | USCS Soil Classification: | | | |
| Test Hole Dimensions (inches) | | | Length | Width | |
| Diameter (if round)= | 8" | Sides (if rectangular)= | | | |

Sandy Soil Criteria Test*

| Trial No. | Start Time | Stop Time | Time Interval, (min.) | Initial Depth to Water (in.) | Final Depth to Water (in.) | Change in Water Level (in.) | Greater than or Equal to 6"? (y/n) |
|---|---|---|---|---|---|---|---|
| 1 | 8:00 | 8:25 | 25 | 18.00 | 52.00" | 34.00" | Y |
| 2 | 8:26 | 8:51 | 25 | 19.00" | 52.00" | 33.00" | Y |

*If two consecutive measurements show that six inches of water seeps away in less than 25 minutes, the test shall be run for an additional hour with measurements taken every 10 minutes. Other wise, pre-soak (fill) overnight. Obtain at least twelve measurements per hole over at least six hours (approximately 30 minute intervals) with a precision of at least 0.25".

| Trial No. | Start Time | Stop Time | $\Delta t$ Time Interval (min.) | $D_o$ Initial Depth to Water (in.) | $D_f$ Final Depth to Water (in.) | $\Delta D$ Change in Water Level (in.) | Percolation Rate (min./in.) |
|---|---|---|---|---|---|---|---|
| 1 | 10:10 | 10:20 | 10 | 19.00" | 52.00" | 33.00" | 0.3 |
| 2 | 10:20 | 10:30 | 10 | 19.00" | 52.00" | 33.00" | 0.3 |
| 3 | 10:31 | 10:41 | 10 | 19.00" | 52.00" | 33.00" | 0.3 |
| 4 | 10:42 | 10:52 | 10 | 19.00" | 48.50" | 29.50" | 0.34 |
| 5 | 10:53 | 11:03 | 10 | 19.00" | 46.25" | 27.25" | 0.37 |
| 6 | 11:04 | 11:14 | 10 | 19.00" | 44.00" | 25.00 | 0.40 |
| 7 | | | | | | | |
| 8 | | | | | | | |
| 9 | | | | | | | |
| 10 | | | | | | | |
| 11 | | | | | | | |
| 12 | | | | | | | |
| 13 | | | | | | | |
| 14 | | | | | | | |
| 15 | | | | | | | |

25.00 × 6 = 150 in/hr

COMMENTS:

K= 28.57 in/hr

Table 5 – Sample Test Data Form for Percolation Test

Basin 3F **Percolation Test Data Sheet**

| Project: | Ocean Breeze | Project No: | 6960-A12 | Date: | 1-26-20 |
|---|---|---|---|---|---|
| Test Hole No: | IB-120 | Tested By: | Matt S. | | |
| Depth of Test Hole, $D_f$: | 48.5" | USCS Soil Classification: | | | |
| Test Hole Dimensions (inches) | | | Length | Width | |
| Diameter (if round)= | 8" | Sides (if rectangular)= | | | |

Sandy Soil Criteria Test*

| Trial No. | Start Time | Stop Time | Time Interval, (min.) | Initial Depth to Water (in.) | Final Depth to Water (in.) | Change in Water Level (in.) | Greater than or Equal to 6"? (y/n) |
|---|---|---|---|---|---|---|---|
| 1 | 8:00 | 8:25 | 25 | 17.00" | 59.50" | 42.50" | Y |
| 2 | 8:26 | 8:51 | 25 | 19.00" | 52.50" | 33.50" | Y |

*If two consecutive measurements show that six inches of water seeps away in less than 25 minutes, the test shall be run for an additional hour with measurements taken every 10 minutes. Other wise, pre-soak (fill) overnight. Obtain at least twelve measurements per hole over at least six hours (approximately 30-minute intervals) with a precision of at least 0.25".

TOP of Pipe (Not Hole)

| Trial No. | Start Time | Stop Time | $\Delta t$ Time Interval (min.) | $D_o$ Initial Depth to Water (in.) | $D_f$ Final Depth to Water (in.) | $\Delta D$ Change in Water Level (in.) | Percolation Rate (min./in.) |
|---|---|---|---|---|---|---|---|
| 1 | 10:10 | 10:20 | 10 | 19.00" | 49.50" | 30.5" | 0.33 |
| 2 | 10:21 | 10:31 | 10 | 19.00" | 43.25" | 24.25" | 0.41 |
| 3 | 10:31 | 10:41 | 10 | 19.00" | 40.25" | 21.25" | 0.47 |
| 4 | 10:42 | 10:52 | 10 | 19.00" | 38.25" | 19.25" | 0.52 |
| 5 | 10:53 | 11:03 | 10 | 19.00" | 35.50" | 16.50 | 0.60 |
| 6 | 11:04 | 11:14 | 10 | 19.00" | 33.00" | 14.00" | 0.71 |
| 7 | | | | | | | |
| 8 | | | | | | | |
| 9 | | | | | | | |
| 10 | | | | | | | |
| 11 | | | | | | | |
| 12 | | | | | | | |
| 13 | | | | | | | |
| 14 | | | | | | | |
| 15 | | | | | | | |

14.00 x 6 = 84 in/hr

COMMENTS:

K= 6.86 in/hr

Table 5 – Sample Test Data Form for Percolation Test

From: Appendix D- Approved Infiltration Rate Assessment Methods

**Basin Name** 3G
**Assumed Infl. Bot. = ±** 229.5 **ft. elv, GW elv=** <215.0 **ft, Cut/Fill** Cut
**USDA Soil** Tujunga Sand, Vista Coarse Sandy Loam
**HSG =** B **, Ksat: narrative (& in/hr)** Moderately high (1.98 - 5.95 in/hr)
**Geologic Unit:** Qal

**Table D.1-1: Considerations for Geotechnical Analysis of Infiltration Restrictions**

| Restriction Element | | Is Element Applicable? (Yes/No) |
|---|---|---|
| Mandatory Considerations | BMP is within 100' of Contaminated Soils | NO |
| | BMP is within 100' of Industrial Activities Lacking Source Control | NO |
| | BMP is within 100' of Well/Groundwater Basin | YES |
| | BMP is within 50' of Septic Tanks/Leach Fields | NO |
| | BMP is within 10' of Structures/Tanks/Walls | NO |
| | BMP is within 10' of Sewer Utilities | NO |
| | BMP is within 10' of Groundwater Table | NO |
| | BMP is within Hydric Soils | NO |
| | BMP is within Highly Liquefiable Soils and has Connectivity to Structures | YES |
| | BMP is within 1.5 Times the Height of Adjacent Steep Slopes (≥25%) | NO |
| | County Staff has Assigned "Restricted" Infiltration Category | |
| Optional Considerations | BMP is within Predominantly Type D Soil | NO |
| | BMP is within 10' of Property Line | NO |
| | BMP is within Fill Depths of ≥5' (Existing or Proposed) | NO |
| | BMP is within 10' of Underground Utilities | NO |
| | BMP is within 250' of Ephemeral Stream | NO |
| | Other (Provide detailed geotechnical support) BMP within 10' of Bedrock/Obstruction | NO |
| Result | Based on examination of the best available information, **I have not identified any restrictions above.** | **Unrestricted** |
| | Based on examination of the best available information, **I have identified one or more restrictions above.** | X **Restricted** |

**Table D.2-1: Elements for Determination of Design Infiltration Rates**

| Item | | Value | Unit |
|---|---|---|---|
| Initial Infiltration Rate: Identify per Section D.2.1 in/hr | (109.5+114)/2 = | 111.75 | in/hr |
| Corrected Infiltration Rate: Identify per Section D.2.2 in/hr | | 8.056 | in/hr |
| Safety Factor: Identify per Section D.2.3 unitless | | Min 2.0 | unitless |
| Design Infiltration Rate: Corrected Infiltration Rate ÷ Safety Factor in/hr | | 4.028 | in/hr |

Using USDA maps, if NRCS soil type present within a proposed BMP location, Default design infiltration rates (in/hr) for each NRCS soil type are: A=0.300, B=0.200, C=0.100, D=0.025, Restricted=0.000. Use of these default design infiltration rates does not require application of any correction factors or safety factors.

**Table D.2-3: Determination of Safety Factor**

| Consideration | | Assigned Weight (w) | Factor Value (v) | Product (p) p = w x v |
|---|---|---|---|---|
| Suitability Assessment (A) | Infiltration Testing Method | 0.25 | Refer to Table D.2-4 | 2 x 0.25 |
| | Soil Texture Class | 0.25 | | 1 x 0.25 |
| | Soil Variability | 0.25 | | 2 x 0.25 |
| | Depth to Groundwater/Obstruction | 0.25 | | 1 X 0.25 |
| | Suitability Assessment Safety Factor, $S_A = \Sigma p$ | | | 1.50 |
| Design (B) | Pretreatment | 0.50 | Refer to Table D.2-4 | |
| | Resiliency | 0.25 | | |
| | Compaction | 0.25 | | |
| | Design Safety Factor, $S_B = \Sigma p$ | | | |
| Safety Factor, $S = S_A \times S_B$ (Must be always greater than or equal to 2) | | | | Min 2.0 |

**GeoSoils, Inc.**

# BORING LOG

*PROJECT:* OCEAN BREEZE
5280 W. Lilac Road, Bonsall

*W.O.* 6960-A12-SC *BORING* IB-121 *SHEET* 1 *OF* 1

*DATE EXCAVATED* 1-21-21 *LOGGED BY:* TMP *APPROX. ELEV.:* 231'

*SAMPLE METHOD:* BASIN 3G

| Depth (ft.) | Sample: Bulk | Sample: Undisturbed | Sample: Blows/Ft. | USCS Symbol | Dry Unit Wt. (pcf) | Moisture (%) | Saturation (%) | Material Description |
|---|---|---|---|---|---|---|---|---|
| 0 | | | | SM | | | | **COLLUVIUM/TOPSOIL:** 0' SILTY SAND, light reddish brown, damp, medium dense; fine to coarse sands. |
| | | | | SP | | | | **ALLUVIUM:** @ 3' SAND, olive light brown, damp, loose; fine to medium sands. |
| 5 | | | | | | | | Total Depth = 5'<br>No Groundwater or Caving Encountered<br>Backfilled 1-26-21 |
| 10 | | | | | | | | |
| 15 | | | | | | | | |
| 20 | | | | | | | | |
| 25 | | | | | | | | |
| 30 | | | | | | | | |

*Standard Penetration Test*
*Undisturbed, Ring Sample*
*Groundwater*
*Seepage*

**GeoSoils, Inc.**

*PLATE* _____

**GeoSoils, Inc.**

# BORING LOG

*PROJECT:* OCEAN BREEZE
5280 W. Lilac Road, Bonsall

*W.O.* 6960-A12-SC *BORING* IB-122 *SHEET* 1 *OF* 1

*DATE EXCAVATED* 1-21-21 *LOGGED BY:* TMP *APPROX. ELEV.:* 231'

*SAMPLE METHOD:* BASIN 3G

| Depth (ft.) | Sample: Bulk | Sample: Undisturbed | Sample: Blows/Ft. | USCS Symbol | Dry Unit Wt. (pcf) | Moisture (%) | Saturation (%) | Material Description |
|---|---|---|---|---|---|---|---|---|
| 0 | | | | SM | | | | **COLLUVIUM/TOPSOIL:** @ 0' SILTY SAND, light reddish brown, damp, medium dense; fine to coarse sand. |
| | | | | SP | | | | **ALLUVIUM:** @ 3' SAND, gray, dry, loose. |
| 5 | | | | | | | | Total Depth = 5'<br>No Groundwater or Caving Encountered<br>Backfilled 1-26-21 |
| 10 | | | | | | | | |
| 15 | | | | | | | | |
| 20 | | | | | | | | |
| 25 | | | | | | | | |
| 30 | | | | | | | | |

*Standard Penetration Test*
*Undisturbed, Ring Sample*
*Groundwater*
*Seepage*

**GeoSoils, Inc.**

*PLATE* _____

**GeoSoils, Inc.**

# BORING LOG

*PROJECT:* OCEAN BREEZE
5280 W. Lilac Road, Bonsall

*W.O.* 6960-A12-SC *BORING* GW-22 *SHEET* 1 *OF* 1

*DATE EXCAVATED* 1-21-21 *LOGGED BY:* TMP *APPROX. ELEV.:* 230'

*SAMPLE METHOD:* BASIN 3G

| Depth (ft.) | Sample: Bulk | Sample: Undisturbed | Sample: Blows/Ft. | USCS Symbol | Dry Unit Wt. (pcf) | Moisture (%) | Saturation (%) | Material Description |
|---|---|---|---|---|---|---|---|---|
| 0 | | | | SM | | | | **COLLUVIUM/TOPSOIL:** @ 0' SILTY SAND, light reddish brown, damp, medium dense. |
| | | | | SP | | | | **ALLUVIUM:** @ 3' SAND, olive gray, damp, loose. |
| 5 | | | | | | | | @ 6' moist, dark olive green. |
| 10 | | | | | | | | @ 10' yellowish brown. |
| | | | | | | | | @ 12' SAND, olive green, damp, medium dense; medium to coarse sands, occasional gravel to ½" diameter. |
| 15 | | | | | | | | Total Depth = 15'<br>No Groundwater or Caving Encountered<br>Backfilled 1-26-21 |
| 20 | | | | | | | | |
| 25 | | | | | | | | |
| 30 | | | | | | | | |

▼ *Standard Penetration Test*
⌶ *Undisturbed, Ring Sample*
▽ *Groundwater*
♀ *Seepage*

**GeoSoils, Inc.**

*PLATE* _____

Basin 36 Percolation Test Data Sheet

| Project: | Ocean Breeze | Project No: | 6960-A12 | Date: | 1-26-21 |
|---|---|---|---|---|---|
| Test Hole No: | JB-121 | Tested By: | Matt S. | | |
| Depth of Test Hole, $D_T$: | 53" | USCS Soil Classification: | | | |
| Test Hole Dimensions (inches) | | | Length | Width | |
| Diameter (if round)= | 8" | Sides (if rectangular)= | | | |

Sandy Soil Criteria Test*

| Trial No. | Start Time | Stop Time | Time Interval, (min.) | Initial Depth to Water (in.) | Final Depth to Water (in.) | Change in Water Level (in.) | Greater than or Equal to 6"? (y/n) |
|---|---|---|---|---|---|---|---|
| 1 | 8:05 | 8:30 | 25 | 19.00 | 49.00" | 30.00 | y |
| 2 | 8:31 | 8:56 | 25 | 19.00" | 47.50" | 28.50" | y |

*If two consecutive measurements show that six inches of water seeps away in less than 25 minutes, the test shall be run for an additional hour with measurements taken every 10 minutes. Other wise, pre-soak (fill) overnight. Obtain at least twelve measurements per hole over at least six hours (approximately 30 minute intervals) with a precision of at least 0.25".

| Trial No. | Start Time | Stop Time | $\Delta t$ Time Interval (min.) | $D_o$ Initial Depth to Water (in.) | $D_f$ Final Depth to Water (in.) | $\Delta D$ Change in Water Level (in.) | Percolation Rate (min./in.) |
|---|---|---|---|---|---|---|---|
| 1 | 11:45 | 11:55 | 10 | 19.00" | 46.25" | 27.25" | 0.37 |
| 2 | 11:56 | 12:06 | 10 | 19.00" | 39.50" | 20.50" | 0.49 |
| 3 | 12:07 | 12:17 | 10 | 19.00" | 38.50" | 19.50" | 0.51 |
| 4 | 12:18 | 12:28 | 10 | 19.00" | 38.25" | 19.25" | 0.52 |
| 5 | 12:30 | 12:40 | 10 | 19.00" | 38.00" | 19.00" | 0.53 |
| 6 | 12:41 | 12:51 | 10 | 19.00" | 37.25" | 18.25 | 0.55 |
| 7 | | | | | | | |
| 8 | | | | | | | |
| 9 | | | | | | | |
| 10 | | | | | | | |
| 11 | | | | | | | |
| 12 | | | | | | | |
| 13 | | | | | | | |
| 14 | | | | | | | |
| 15 | | | | | | | |

18.25 x 6 = 109.5 in/hr

COMMENTS:

K = 8.15 in/hr

Table 5 – Sample Test Data Form for Percolation Test

Basin 36

## Percolation Test Data Sheet

| | | | | | |
|---|---|---|---|---|---|
| Project: | Ocean Breeze | Project No: | 6960-A12 | Date: | 1-26-21 |
| Test Hole No: | LB-T22 | Tested By: | Matt S. | | |
| Depth of Test Hole, $D_T$: | 54" | USCS Soil Classification: | | | |
| Test Hole Dimensions (inches) | | | Length | Width | |
| Diameter (if round)= | 8" | Sides (if rectangular)= | | | |

Sandy Soil Criteria Test*

| Trial No. | Start Time | Stop Time | Time Interval, (min.) | Initial Depth to Water (in.) | Final Depth to Water (in.) | Change in Water Level (in.) | Greater than or Equal to 6"? (y/n) |
|---|---|---|---|---|---|---|---|
| 1 | 8:05 | 8:30 | 25 | 19.00" | 48.00" | 29.00" | Y |
| 2 | 8:31 | 8:56 | 25 | 19.00" | 45.50" | 26.50" | Y |

*If two consecutive measurements show that six inches of water seeps away in less than 25 minutes, the test shall be run for an additional hour with measurements taken every 10 minutes. Other wise, pre-soak (fill) overnight. Obtain at least twelve measurements per hole over at least six hours (approximately 30 minute intervals) with a precision of at least 0.25".

| Trial No. | Start Time | Stop Time | $\Delta t$ Time Interval (min.) | $D_o$ Initial Depth to Water (in.) | $D_f$ Final Depth to Water (in.) | $\Delta D$ Change in Water Level (in.) | Percolation Rate (min./in.) |
|---|---|---|---|---|---|---|---|
| 1 | 11:45 | 11:55 | 10 | 19.00" | 42.25" | 23.25" | 0.43 |
| 2 | 11:56 | 12:06 | 10 | 19.00" | 48.00" | 29.00" | 0.34 |
| 3 | 12:08 | 12:18 | 10 | 19.00" | 39.00" | 20.00" | 0.50 |
| 4 | 12:18 | 12:28 | 10 | 19.00" | 38.50" | 19.50" | 0.51 |
| 5 | 12:30 | 12:40 | 10 | 19.00" | 38.50" | 19.50" | 0.51 |
| 6 | 12:41 | 12:51 | 10 | 19.00" | 38.00" | 19.00" | 0.53 |
| 7 | | | | | | | |
| 8 | | | | | | | |
| 9 | | | | | | | |
| 10 | | | | | | | |
| 11 | | | | | | | |
| 12 | | | | | | | |
| 13 | | | | | | | |
| 14 | | | | | | | |
| 15 | | | | | | | |

19.0 x 6 =
114 in/hr

COMMENTS:

K= 8.29 in/hr

Table 5 – Sample Test Data Form for Percolation Test

County of San Diego

From: Appendix D- Approved Infiltration Rate Assessment Methods

**Basin Name** 3H
**Assumed Infl. Bot. = ±** 606.5 **ft. elv, GW elv=** <595.0 **ft, Cut/Fill** Cut
**USDA Soil** Placentia Sandy Loam
**HSG =** C **, Ksat: narrative (& in/hr)** mod. low to mod. high
**Geologic Unit:** Kcc

**Table D.1-1: Considerations for Geotechnical Analysis of Infiltration Restrictions**

| Restriction Element | | Is Element Applicable? (Yes/No) |
|---|---|---|
| Mandatory Considerations | BMP is within 100' of Contaminated Soils | NO |
| | BMP is within 100' of Industrial Activities Lacking Source Control | NO |
| | BMP is within 100' of Well/Groundwater Basin | NO |
| | BMP is within 50' of Septic Tanks/Leach Fields | NO |
| | BMP is within 10' of Structures/Tanks/Walls | NO |
| | BMP is within 10' of Sewer Utilities | NO |
| | BMP is within 10' of Groundwater Table | NO |
| | BMP is within Hydric Soils | NO |
| | BMP is within Highly Liquefiable Soils and has Connectivity to Structures | NO |
| | BMP is within 1.5 Times the Height of Adjacent Steep Slopes (≥25%) | NO |
| | County Staff has Assigned "Restricted" Infiltration Category | |
| Optional Considerations | BMP is within Predominantly Type D Soil | NO |
| | BMP is within 10' of Property Line | NO |
| | BMP is within Fill Depths of ≥5' (Existing or Proposed) | NO |
| | BMP is within 10' of Underground Utilities | NO |
| | BMP is within 250' of Ephemeral Stream | NO |
| | Other (Provide detailed geotechnical support) BMP within 10' of Bedrock/Obstruction | YES |
| Result | Based on examination of the best available information, **I have not identified any restrictions above.** | **Unrestricted** |
| | Based on examination of the best available information, **I have identified one or more restrictions above.** | **X Restricted** |

**Table D.2-1: Elements for Determination of Design Infiltration Rates**

| Item | Value | Unit |
|---|---|---|
| Initial Infiltration Rate: Identify per Section D.2.1 in/hr (7+3)/2 = | 5.00 | in/hr |
| Corrected Infiltration Rate: Identify per Section D.2.2 in/hr | 0.439 | in/hr |
| Safety Factor: Identify per Section D.2.3 unitless | Min 2.0 | unitless |
| Design Infiltration Rate: Corrected Infiltration Rate ÷ Safety Factor in/hr | 0.219 | in/hr |

Using USDA maps, if NRCS soil type present within a proposed BMP location, Default design infiltration rates (in/hr) for each NRCS soil type are: A=0.300, B=0.200, C=0.100, D=0.025, Restricted=0.000. Use of these default design infiltration rates does not require application of any correction factors or safety factors.

**Table D.2-3: Determination of Safety Factor**

| Consideration | | Assigned Weight (w) | Factor Value (v) | Product (p) p = w x v |
|---|---|---|---|---|
| Suitability Assessment (A) | Infiltration Testing Method | 0.25 | Refer to Table D.2-4 | 2 x 0.25 |
| | Soil Texture Class | 0.25 | | 1 x 0.25 |
| | Soil Variability | 0.25 | | 2 x 0.25 |
| | Depth to Groundwater/Obstruction | 0.25 | | 1 x 0.25 |
| | Suitability Assessment Safety Factor, $S_A = \Sigma p$ | | | 1.50 |
| Design (B) | Pretreatment | 0.50 | Refer to Table D.2-4 | |
| | Resiliency | 0.25 | | |
| | Compaction | 0.25 | | |
| | Design Safety Factor, $S_B = \Sigma p$ | | | |
| Safety Factor, $S = S_A \times S_B$ (Must be always greater than or equal to 2) | | | | Min 2.0 |

**GeoSoils, Inc.**

# BORING LOG

*PROJECT:* OCEAN BREEZE
5280 W. Lilac Road, Bonsall

*W.O.* 6960-A12-SC *BORING* IB-125 *SHEET* 1 *OF* 1

*DATE EXCAVATED* 1-21-21 *LOGGED BY:* TMP *APPROX. ELEV.:* 614'

*SAMPLE METHOD:* BASIN 3H

| Depth (ft.) | Sample: Bulk | Sample: Undisturbed | Sample: Blows/Ft. | USCS Symbol | Dry Unit Wt. (pcf) | Moisture (%) | Saturation (%) | Material Description |
|---|---|---|---|---|---|---|---|---|
| 0 | | | | SM | | | | **COLLUVIUM/TOPSOIL:** @ 0' SILTY SAND w/GRAVEL, reddish brown, damp, medium dense to dense; fine to coarse sands. |
| 5 | | | | SM | | | | **GRANITICS:** @ 4' SILTY SAND, olive dark brown, damp, dense; weathered, disintegrates to silty sand with gravel to ½" diameter. @ 5' dense. |
| | | | | | | | | Total Depth = 5' |
| | | | | | | | | No Groundwater or Caving Encountered |
| | | | | | | | | Backfilled 1-26-21 |
| 10 | | | | | | | | |
| 15 | | | | | | | | |
| 20 | | | | | | | | |
| 25 | | | | | | | | |
| 30 | | | | | | | | |

▼ *Standard Penetration Test*
⌶ *Undisturbed, Ring Sample*
▽ *Groundwater*
♀ *Seepage*

**GeoSoils, Inc.**

*PLATE* _____

**GeoSoils, Inc.**

# BORING LOG

*PROJECT:* OCEAN BREEZE
5280 W. Lilac Road, Bonsall

*W.O.* 6960-A12-SC *BORING* IB-126 *SHEET* 1 *OF* 1

*DATE EXCAVATED* 1-21-21 *LOGGED BY:* TMP *APPROX. ELEV.:* 612'

*SAMPLE METHOD:* BASIN 3H

| Depth (ft.) | Sample: Bulk | Sample: Undisturbed | Sample: Blows/Ft. | USCS Symbol | Dry Unit Wt. (pcf) | Moisture (%) | Saturation (%) | Material Description |
|---|---|---|---|---|---|---|---|---|
| 0 | | | | SM | | | | **COLLUVIUM/TOPSOIL:** @ 0' SILTY SAND with gravel, damp, medium dense to dense with depth. |
| 5 | | | | SM | | | | **GRANITICS:** @ 4' SILTY SAND, weathered, disintegrates to silty sand with gravel, yellowish brown, dense; gravel to $\frac{1}{4}$" diameter. |
| | | | | | | | | Total Depth = 5' |
| | | | | | | | | No Groundwater or Caving Encountered |
| | | | | | | | | Backfilled1-26-21 |
| 10 | | | | | | | | |
| 15 | | | | | | | | |
| 20 | | | | | | | | |
| 25 | | | | | | | | |
| 30 | | | | | | | | |

▼ *Standard Penetration Test*
⌶ *Undisturbed, Ring Sample*
▽ *Groundwater*
♀ *Seepage*

**GeoSoils, Inc.**

*PLATE* _____

**GeoSoils, Inc.**

# BORING LOG

*PROJECT:* OCEAN BREEZE
5280 W. Lilac Road, Bonsall

*W.O.* 6960-A12-SC *BORING* GW-24 *SHEET* 1 *OF* 1

*DATE EXCAVATED* 1-21-21 *LOGGED BY:* TMP *APPROX. ELEV.:* 610'

*SAMPLE METHOD:* BASIN 3H

| Depth (ft.) | Sample: Bulk | Sample: Undisturbed | Sample: Blows/Ft. | USCS Symbol | Dry Unit Wt. (pcf) | Moisture (%) | Saturation (%) | Material Description |
|---|---|---|---|---|---|---|---|---|
| 0 | | | | SM | | | | **COLLUVIUM/TOPSOIL:** @ 0' SILTY SAND with gravel, reddish brown, damp, medium dense to dense with depth. |
| 10 | | | | SM | | | | **GRANITICS:** @ 9' SILTY SAND, olive gray, damp, dense; disintegrates to fine to coarse grained, upper 3'-5' weathered. @ 12' grinding. @ 13' very hard drilling. @ 13.5' less difficulty. |
| 15 | | | | | | | | Total Depth = 15' No Groundwater or Caving Encountered Backfilled 1-26-21 |
| 20 | | | | | | | | |
| 25 | | | | | | | | |
| 30 | | | | | | | | |

*Standard Penetration Test*
*Undisturbed, Ring Sample*
*Groundwater*
*Seepage*

**GeoSoils, Inc.**

*PLATE* _____

Basin 3H

## Percolation Test Data Sheet

| | | | | | |
|---|---|---|---|---|---|
| Project: | Ocean Breeze | Project No: | 6960-A12 | Date: | 1-26-20 |
| Test Hole No: | IB-TS | Tested By: | Matt S. | | |
| Depth of Test Hole, $D_T$: | 49" | USCS Soil Classification: | | | |
| Test Hole Dimensions (inches) | | | Length | Width | |
| Diameter (if round)= | 8" | Sides (if rectangular)= | | | |

Sandy Soil Criteria Test*

| Trial No. | Start Time | Stop Time | Time Interval, (min.) | Initial Depth to Water (in.) | Final Depth to Water (in.) | Change in Water Level (in.) | Greater than or Equal to 6"? (y/n) |
|---|---|---|---|---|---|---|---|
| 1 | 8:54 | 9:19 | 25 | 14.75" | 17.00" | 2.25" | N |
| 2 | 9:21 | 9:46 | 25 | 15.75" | 17.50" | 1.75 | N |

*If two consecutive measurements show that six inches of water seeps away in less than 25 minutes, the test shall be run for an additional hour with measurements taken every 20 minutes. Other wise, pre-soak (fill) overnight. Obtain at least twelve measurements per hole over at least six hours (approximately 30 minute intervals) with a precision of at least 0.25".

| Trial No. | Start Time | Stop Time | $\Delta t$ Time Interval (min.) | $D_o$ Initial Depth to Water (in.) | $D_f$ Final Depth to Water (in.) | $\Delta D$ Change in Water Level (in.) | Percolation Rate (min./in.) | |
|---|---|---|---|---|---|---|---|---|
| 1 | 9:46 | 10:16 | 30 | 14.25" | 16.25" | 2.00 | 15 | |
| 2 | 10:16 | 10:46 | 30 | 16.25" | 18.25" | 2.00 | 15 | |
| 3 | 10:46 | 11:16 | 30 | 18.25" | 20.25" | 2.00 | 15 | |
| 4 | 11:18 | 11:48 | 30 | 16.25" | 18.00" | 1.75 | 17.1 | |
| 5 | 11:48 | 12:18 | 30 | 18.00" | 19.75" | 1.75 | 17.1 | |
| 6 | 12:18 | 12:48 | 30 | 19.75" | 21.25" | 1.50 | 20 | |
| 7 | 12:48 | 1:18 | 30 | 21.25" | 22.75" | 1.50 | 20 | ← Refill |
| 8 | 1:22 | 1:52 | 30 | 15.75" | 18.00" | 2.25" | 13.3 | |
| 9 | 1:52 | 2:22 | 30 | 18.00 | 19.75" | 1.75" | 17.1 | |
| 10 | 2:22 | 2:52 | 30 | 19.75" | 21.25" | 1.50" | 20 | |
| 11 | 2:53 | 3:23 | 30 | 18.00" | 19.50" | 1.50 | 20 | |
| 12 | 3:23 | 3:53 | 30 | 19.50" | 21.00" | 1.50 | 20 | 3.00 in/hr |
| 13 | | | | | | | | |
| 14 | | | | | | | | |
| 15 | | | | | | | | |

COMMENTS:

K= 0.19 in/hr

Table 5 – Sample Test Data Form for Percolation Test

Basin 3H

## Percolation Test Data Sheet

| | | | | | |
|---|---|---|---|---|---|
| Project: | Ocean Breeze | Project No: | 6960-A12 | Date: | 1-26-20 |
| Test Hole No: | IB-12b | Tested By: | Matt S. | | |
| Depth of Test Hole, $D_T$: | 41" | USCS Soil Classification: | | | |
| Test Hole Dimensions (inches) | | | Length | Width | |
| Diameter (if round)= | 8" | Sides (if rectangular)= | | | |

Sandy Soil Criteria Test*

| Trial No. | Start Time | Stop Time | Time Interval, (min.) | Initial Depth to Water (in.) | Final Depth to Water (in.) | Change in Water Level (in.) | Greater than or Equal to 6"? (y/n) |
|---|---|---|---|---|---|---|---|
| 1 | 8:54 | 9:19 | 25 | 18.25" | 24.00 | 5.75 | N |
| 2 | 9:21 | 9:46 | 25 | 19.00" | 24.00" | 5.00" | N |

*If two consecutive measurements show that six inches of water seeps away in less than 25 minutes, the test shall be run for an additional hour with measurements taken every 10 minutes. Other wise, pre-soak (fill) overnight. Obtain at least twelve measurements per hole over at least six hours (approximately 30 minute intervals) with a precision of at least 0.25".

| Trial No. | Start Time | Stop Time | Δt Time Interval (min.) | $D_o$ Initial Depth to Water (in.) | $D_f$ Final Depth to Water (in.) | ΔD Change in Water Level (in.) | Percolation Rate (min./in.) | |
|---|---|---|---|---|---|---|---|---|
| 1 | 9:46 | 10:16 | 30 | 19.00" | 23.50" | 4.50" | 6.66 | |
| 2 | 10:16 | 10:46 | 30 | 23.50" | 27.75" | 4.25" | 7.0 | |
| 3 | 10:46 | 11:16 | 30 | 27.75" | 31.75" | 4.00" | 7.5 | |
| 4 | 11:18 | 11:48 | 30 | 20.00" | 24.00" | 4.00 | 7.5 | |
| 5 | 11:48 | 12:18 | 30 | 23.50" | 27.00" | 3.50" | 8.6 | |
| 6 | 12:18 | 12:48 | 30 | 27.00" | 30.75" | 3.75 | 8.0 | |
| 7 | 12:48 | 1:18 | 30 | 30.25" | 33.75" | 3.50" | 8.6 | ← Refill |
| 8 | 1:22 | 1:52 | 30 | 21.00 | 25.75" | 4.75" | 6.3 | |
| 9 | 1:53 | 2:23 | 30 | 20.25 | 24.75" | 4.50" | 6.66 | |
| 10 | 2:24 | 2:54 | 30 | 20.50 | 24.50" | 4.00" | 7.5 | |
| 11 | 2:55 | 3:25 | 30 | 21.00 | 24.75" | 3.75" | 8.0 | |
| 12 | 3:25 | 3:55 | 30 | 21.00 | 24.50" | 3.50 | 8.6 | 7.00 min/hr |
| 13 | | | | | | | | |
| 14 | | | | | | | | |
| 15 | | | | | | | | |

COMMENTS:

K= 0.69 in/hr

Table 5 – Sample Test Data Form for Percolation Test

From: Appendix D- Approved Infiltration Rate Assessment Methods

**Basin Name** 3I
**Assumed Infl. Bot. = ±** 655.0 **ft. elv, GW elv=** <655.0 **ft, Cut/Fill** Cut
**USDA Soil** Placentia Sandy Loam
**HSG =** C **, Ksat: narrative (& in/hr)** mod. low to mod. high
**Geologic Unit:** Kcc

**Table D.1-1: Considerations for Geotechnical Analysis of Infiltration Restrictions**

| Restriction Element | | Is Element Applicable? (Yes/No) |
|---|---|---|
| Mandatory Considerations | BMP is within 100' of Contaminated Soils | NO |
| | BMP is within 100' of Industrial Activities Lacking Source Control | NO |
| | BMP is within 100' of Well/Groundwater Basin | NO |
| | BMP is within 50' of Septic Tanks/Leach Fields | NO |
| | BMP is within 10' of Structures/Tanks/Walls | NO |
| | BMP is within 10' of Sewer Utilities | NO |
| | BMP is within 10' of Groundwater Table | NO |
| | BMP is within Hydric Soils | NO |
| | BMP is within Highly Liquefiable Soils and has Connectivity to Structures | NO |
| | BMP is within 1.5 Times the Height of Adjacent Steep Slopes (≥25%) | NO |
| | County Staff has Assigned "Restricted" Infiltration Category | |
| Optional Considerations | BMP is within Predominantly Type D Soil | NO |
| | BMP is within 10' of Property Line | NO |
| | BMP is within Fill Depths of ≥5' (Existing or Proposed) | NO |
| | BMP is within 10' of Underground Utilities | NO |
| | BMP is within 250' of Ephemeral Stream | NO |
| | Other (Provide detailed geotechnical support) BMP within 10' of Bedrock/Obstruction | YES |
| Result | Based on examination of the best available information, **I have not identified any restrictions above.** | **Unrestricted** |
| | Based on examination of the best available information, **I have identified one or more restrictions above.** | **X Restricted** |

**Table D.2-1: Elements for Determination of Design Infiltration Rates**

| Item | | Value | Unit |
|---|---|---|---|
| Initial Infiltration Rate: Identify per Section D.2.1 in/hr | (3+12)/2 = | 7.5 | in/hr |
| Corrected Infiltration Rate: Identify per Section D.2.2 in/hr | | 0.447 | in/hr |
| Safety Factor: Identify per Section D.2.3 unitless | | Min 2.0 | unitless |
| Design Infiltration Rate: Corrected Infiltration Rate ÷ Safety Factor in/hr | | 0.223 | in/hr |

Using USDA maps, if NRCS soil type present within a proposed BMP location, Default design infiltration rates (in/hr) for each NRCS soil type are: A=0.300, B=0.200, C=0.100, D=0.025, Restricted=0.000. Use of these default design infiltration rates does not require application of any correction factors or safety factors.

**Table D.2-3: Determination of Safety Factor**

| Consideration | | Assigned Weight (w) | Factor Value (v) | Product (p) p = w x v |
|---|---|---|---|---|
| Suitability Assessment (A) | Infiltration Testing Method | 0.25 | Refer to Table D.2-4 | 2 x 0.25 |
| | Soil Texture Class | 0.25 | | 1 x 0.25 |
| | Soil Variability | 0.25 | | 2 x 0.25 |
| | Depth to Groundwater/Obstruction | 0.25 | | 1 x 0.25 |
| | Suitability Assessment Safety Factor, $S_A = \Sigma p$ | | | 1.50 |
| Design (B) | Pretreatment | 0.50 | Refer to Table D.2-4 | |
| | Resiliency | 0.25 | | |
| | Compaction | 0.25 | | |
| | Design Safety Factor, $S_B = \Sigma p$ | | | |
| Safety Factor, $S = S_A \times S_B$ (Must be always greater than or equal to 2) | | | | Min 2.0 |

**GeoSoils, Inc.**

# BORING LOG

*PROJECT:* OCEAN BREEZE
5280 W. Lilac Road, Bonsall

*W.O.* 6960-A12-SC *BORING* IB-123 *SHEET* 1 *OF* 1

*DATE EXCAVATED* 1-21-21 *LOGGED BY:* TMP *APPROX. ELEV.:* 672'

*SAMPLE METHOD:* BASIN 3I

| Depth (ft.) | Sample: Bulk | Sample: Undisturbed | Sample: Blows/Ft. | USCS Symbol | Dry Unit Wt. (pcf) | Moisture (%) | Saturation (%) | Material Description |
|---|---|---|---|---|---|---|---|---|
| 0 | | | | SM | | | | **COLLUVIUM/TOPSOIL:** @ 0' SILTY SAND with gravel, reddish light brown, damp, medium dense to dense; fine to coarse sands, gravel to ½" diameter. |
| | | | | SM | | | | **GRANITICS:** @ 2' SILTY SAND, grayish light brown, dry, very dense; weathers to SILTY SAND with gravel, upper 1' slightly weathered. |
| 5 | | | | | | | | Total Depth = 5'<br>No Groundwater or Caving Encountered<br>Backfilled 1-26-21 |
| 10 | | | | | | | | |
| 15 | | | | | | | | |
| 20 | | | | | | | | |
| 25 | | | | | | | | |
| 30 | | | | | | | | |

▼ *Standard Penetration Test*
⌶ *Undisturbed, Ring Sample*
▽ *Groundwater*
♀ *Seepage*

**GeoSoils, Inc.**

*PLATE* _____

**GeoSoils, Inc.**

# BORING LOG

*PROJECT:* OCEAN BREEZE
5280 W. Lilac Road, Bonsall

*W.O.* 6960-A12-SC *BORING* IB-124 *SHEET* 1 *OF* 1

*DATE EXCAVATED* 1-21-21 *LOGGED BY:* TMP *APPROX. ELEV.:* 672'

*SAMPLE METHOD:* BASIN 3I

| Depth (ft.) | Sample: Bulk | Sample: Undisturbed | Sample: Blows/Ft. | USCS Symbol | Dry Unit Wt. (pcf) | Moisture (%) | Saturation (%) | Material Description |
|---|---|---|---|---|---|---|---|---|
| 0 | | | | SM | | | | **COLLUVIUM/TOPSOIL:** @ 0' SILTY SAND with gravel, reddish light brown, damp, medium dense to dense; fine to coarse sands, gravel to ½" diameter. |
| | | | | SM | | | | **GRANITICS:** @ 3.5 SILTY SAND, olive green, damp, very dense; slightly weathered to weathered. @ 4' grinding, disintegrates to silty sand with gravel. |
| 5 | | | | | | | | Total Depth = 5' No Groundwater or Caving Encountered Backfilled 1-26-21 |
| 10 | | | | | | | | |
| 15 | | | | | | | | |
| 20 | | | | | | | | |
| 25 | | | | | | | | |
| 30 | | | | | | | | |

▼ *Standard Penetration Test*
⌶ *Undisturbed, Ring Sample*
▽ *Groundwater*
♀ *Seepage*

**GeoSoils, Inc.**

*PLATE* _____

**GeoSoils, Inc.**

# BORING LOG

*PROJECT:* OCEAN BREEZE
5280 W. Lilac Road, Bonsall

*W.O.* 6960-A12-SC *BORING* GW-23 *SHEET* 1 *OF* 1

*DATE EXCAVATED* 1-21-21 *LOGGED BY:* TMP *APPROX. ELEV.:* 670'

*SAMPLE METHOD:* BASIN 3I

| Depth (ft.) | Sample: Bulk | Sample: Undisturbed | Sample: Blows/Ft. | USCS Symbol | Dry Unit Wt. (pcf) | Moisture (%) | Saturation (%) | Material Description |
|---|---|---|---|---|---|---|---|---|
| 0 | | | | SM | | | | **COLLUVIUM/TOPSOIL:** @ 0' SILTY SAND with gravel, reddish brown, moist, medium dense to dense; gravel to ½" diameter, occasional slightly clayey silty sand with gravel zones. |
| 5 | | | | SM | | | | **GRANITICS:** @ 4.5' olive green, damp, very dense. @ 5' grinding, weathers to SILTY SAND with gravel to 1" diameter. |
| 10 | | | | | | | | @ 10' yellowish brown, gravel to 1" diameter. |
| | | | | | | | | @ 13' difficult, very coarse sand with gravel. |
| 15 | | | | | | | | Total Depth = 15' No Groundwater or Caving Encountered Backfilled 1-26-21 |
| 20 | | | | | | | | |
| 25 | | | | | | | | |
| 30 | | | | | | | | |

▼ *Standard Penetration Test*
⌶ *Undisturbed, Ring Sample*
▽ *Groundwater*
♀ *Seepage*

**GeoSoils, Inc.**

*PLATE* _____

Basin 3I **Percolation Test Data Sheet**

| Project: | Ocean Breeze | Project No: | 6960-A12 | Date: | 1-24-20 |
|---|---|---|---|---|---|
| Test Hole No: | IB-T23 | Tested By: | Matt S. | | |
| Depth of Test Hole, $D_T$: | 49" | USCS Soil Classification: | | | |
| Test Hole Dimensions (inches) | | | | Length | Width |
| Diameter (if round)= | 8" | Sides (if rectangular)= | | | |

Sandy Soil Criteria Test*

| Trial No. | Start Time | Stop Time | Time Interval, (min.) | Initial Depth to Water (in.) | Final Depth to Water (in.) | Change in Water Level (in.) | Greater than or Equal to 6"? (y/n) |
|---|---|---|---|---|---|---|---|
| 1 | 8:44 | 9:09 | 25 | 7.00 | 10.00" | 3.00" | N |
| 2 | 9:12 | 9:37 | 25 | 7.00" | 9.75" | 2.75" | N |

*If two consecutive measurements show that six inches of water seeps away in less than 25 minutes, the test shall be run for an additional hour with measurements taken every 10 minutes. Other wise, pre-soak (fill) overnight. Obtain at least twelve measurements per hole over at least six hours (approximately 30-minute intervals) with a precision of at least 0.25".

| Trial No. | Start Time | Stop Time | $\Delta t$ Time Interval (min.) | $D_o$ Initial Depth to Water (in.) | $D_f$ Final Depth to Water (in.) | $\Delta D$ Change in Water Level (in.) | Percolation Rate (min./in.) | |
|---|---|---|---|---|---|---|---|---|
| 1 | 9:40 | 10:10 | 30 | 8.50" | 10.50" | 2.00 | 15 | |
| 2 | 10:10 | 10:40 | 30 | 10.50" | 12.50" | 2.00 | 15 | |
| 3 | 10:40 | 11:10 | 30 | 12.50" | 14.25" | 1.75 | 17.1 | |
| 4 | 11:13 | 11:43 | 30 | 9.00" | 10.75" | 1.75 | 17.1 | |
| 5 | 11:43 | 12:13 | 30 | 10.75" | 12.50" | 1.75 | 17.1 | |
| 6 | 12:13 | 12:43 | 30 | 12.50" | 14.00" | 1.50 | 20 | |
| 7 | 12:43 | 1:13 | 30 | 14.00" | 15.50" | 1.50 | 20 | ← Refill |
| 8 | 1:16 | 1:46 | 30 | 8.75" | 11.00" | 2.25" | 13.3 | |
| 9 | 1:46 | 2:16 | 30 | 11.00" | 12.50" | 1.50" | 20 | |
| 10 | 2:19 | 2:49 | 30 | 9.50" | 11.25" | 1.75" | 17.1 | |
| 11 | 2:50 | 3:20 | 30 | 10.00" | 11.50" | 1.50" | 20 | 3.00 in/hr |
| 12 | 3:20 | 3:50 | 30 | 11.50" | 13.00" | 1.50" | 20 | |
| 13 | | | | | | | | |
| 14 | | | | | | | | |
| 15 | | | | | | | | |

COMMENTS: K= 0.15 in/hr ~~K= 0.46 in/hr 0.45 in/hr~~

Table 5 – Sample Test Data Form for Percolation Test

Basin 3I **Percolation Test Data Sheet**

| Project: | Ocean Breeze | Project No: | 6960-A12 | Date: | 1-26-20 |
|---|---|---|---|---|---|
| Test Hole No: | IB-124 | Tested By: | Matt S. | | |
| Depth of Test Hole, $D_T$: | 50.5" | USCS Soil Classification: | | | |
| Test Hole Dimensions (inches) | | | Length | Width | |
| Diameter (if round)= | 8" | Sides (if rectangular)= | | | |

Sandy Soil Criteria Test*

| Trial No. | Start Time | Stop Time | Time Interval, (min.) | Initial Depth to Water (in.) | Final Depth to Water (in.) | Change in Water Level (in.) | Greater than or Equal to 6"? (y/n) |
|---|---|---|---|---|---|---|---|
| 1 | 9:44 | 9:09 | 25 | 20.00 | 27.75" | 7.75" | Y |
| 2 | 9:12 | 9:37 | 25 | 19.50" | 26.25" | 6.75" | Y |

*If two consecutive measurements show that six inches of water seeps away in less than 25 minutes, the test shall be run for an additional hour with measurements taken every 10 minutes. Other wise, pre-soak (fill) overnight. Obtain at least twelve measurements per hole over at least six hours (approximately 30 minute intervals) with a precision of at least 0.25".

| Trial No. | Start Time | Stop Time | $\Delta t$ Time Interval (min.) | $D_o$ Initial Depth to Water (in.) | $D_f$ Final Depth to Water (in.) | $\Delta D$ Change in Water Level (in.) | Percolation Rate (min./in.) |
|---|---|---|---|---|---|---|---|
| 1 | 1:26 | 1:36 | 10 | 18.25" | 21.75" | 3.50" | 2.86 |
| 2 | 1:37 | 1:47 | 10 | 18.75" | 21.25" | 2.50" | 4 |
| 3 | 1:47 | 1:57 | 10 | 18.75" | 21.25" | 2.50" | 4 |
| 4 | 1:58 | 2:08 | 10 | 19.00" | 21.25" | 2.25" | 4.4 |
| 5 | 2:08 | 2:18 | 10 | 19.00" | 21.25" | 2.25 | 4.4 |
| 6 | 2:20 | 2:30 | 10 | 19.00" | 21.00 | 2.00" | 5 |
| 7 | | | | | | | |
| 8 | | | | | | | |
| 9 | | | | | | | |
| 10 | | | | | | | |
| 11 | | | | | | | |
| 12 | | | | | | | |
| 13 | | | | | | | |
| 14 | | | | | | | |
| 15 | | | | | | | |

$2.00 \times 6 =$
$12.00$ in/hr

COMMENTS:

$K = 0.74$ in/hr

Table 5 – Sample Test Data Form for Percolation Test

From: Appendix D- Approved Infiltration Rate Assessment Methods

**Basin Name** 3J
**Assumed Infl. Bot. = ±** 232.0 **ft. elv, GW elv=** <223.0 **ft, Cut/Fill** Cut
**USDA Soil** Placentia Sandy Loam
**HSG =** C **, Ksat: narrative (& in/hr)** mod. low - mod. high (0.06 - 0.6 in/hr)
**Geologic Unit:** Kcc

**Table D.1-1: Considerations for Geotechnical Analysis of Infiltration Restrictions**

| Restriction Element | | Is Element Applicable? (Yes/No) |
|---|---|---|
| Mandatory Considerations | BMP is within 100' of Contaminated Soils | NO |
| | BMP is within 100' of Industrial Activities Lacking Source Control | NO |
| | BMP is within 100' of Well/Groundwater Basin | NO |
| | BMP is within 50' of Septic Tanks/Leach Fields | NO |
| | BMP is within 10' of Structures/Tanks/Walls | NO |
| | BMP is within 10' of Sewer Utilities | NO |
| | BMP is within 10' of Groundwater Table | NO |
| | BMP is within Hydric Soils | NO |
| | BMP is within Highly Liquefiable Soils and has Connectivity to Structures | NO |
| | BMP is within 1.5 Times the Height of Adjacent Steep Slopes (≥25%) | NO |
| | County Staff has Assigned "Restricted" Infiltration Category | |
| Optional Considerations | BMP is within Predominantly Type D Soil | NO |
| | BMP is within 10' of Property Line | NO |
| | BMP is within Fill Depths of ≥5' (Existing or Proposed) | NO |
| | BMP is within 10' of Underground Utilities | NO |
| | BMP is within 250' of Ephemeral Stream | NO |
| | Other (Provide detailed geotechnical support) BMP within 10' of Bedrock/Obstruction | YES |
| Result | Based on examination of the best available information, **I have not identified any restrictions above.** | **Unrestricted** |
| | Based on examination of the best available information, **I have identified one or more restrictions above.** | **X Restricted** |

**Table D.2-1: Elements for Determination of Design Infiltration Rates**

| Item | Value | Unit |
|---|---|---|
| Initial Infiltration Rate: Identify per Section D.2.1 in/hr (1.5+3.5)/2 = | 2.50 | in/hr |
| Corrected Infiltration Rate: Identify per Section D.2.2 in/hr | 0.135 | in/hr |
| Safety Factor: Identify per Section D.2.3 unitless | Min 2.0 | unitless |
| Design Infiltration Rate: Corrected Infiltration Rate ÷ Safety Factor in/hr | 0.067 | in/hr |

Using USDA maps, if NRCS soil type present within a proposed BMP location, Default design infiltration rates (in/hr) for each NRCS soil type are: A=0.300, B=0.200, C=0.100, D=0.025, Restricted=0.000. Use of these default design infiltration rates does not require application of any correction factors or safety factors.

**Table D.2-3: Determination of Safety Factor**

| Consideration | | Assigned Weight (w) | Factor Value (v) | Product (p) p = w x v |
|---|---|---|---|---|
| Suitability Assessment (A) | Infiltration Testing Method | 0.25 | Refer to Table D.2-4 | 2 x 0.25 |
| | Soil Texture Class | 0.25 | | 3 x 0.25 |
| | Soil Variability | 0.25 | | 2 x 0.25 |
| | Depth to Groundwater/Obstruction | 0.25 | | 1 x 0.25 |
| | Suitability Assessment Safety Factor, $S_A = \Sigma p$ | | | 2.0 |
| Design (B) | Pretreatment | 0.50 | Refer to Table D.2-4 | |
| | Resiliency | 0.25 | | |
| | Compaction | 0.25 | | |
| | Design Safety Factor, $S_B = \Sigma p$ | | | |
| Safety Factor, $S = S_A \times S_B$ (Must be always greater than or equal to 2) | | | | Min 2.0 |

**GeoSoils, Inc.**

# BORING LOG

*PROJECT:* OCEAN BREEZE
5280 W. Lilac Road, Bonsall

*W.O.* 6960-A12-SC *BORING* IB-109 *SHEET* 1 *OF* 1

*DATE EXCAVATED* 1-21-21 *LOGGED BY:* MS *APPROX. ELEV.:* 238'

*SAMPLE METHOD:* BASIN 3J

| Depth (ft.) | Sample: Bulk | Sample: Undisturbed | Sample: Blows/Ft. | USCS Symbol | Dry Unit Wt. (pcf) | Moisture (%) | Saturation (%) | Material Description |
|---|---|---|---|---|---|---|---|---|
| 0 | | | | SM<br>SM/<br>SC | | | | **COLLUVIUM:**<br>@ 0' SILTY SAND, light brown, dry, medium dense.<br>@ 1' As per 0'; SILTY/CLAYEY SAND, dark brown, damp, medium dense; fine to medium grain sand. |
| 5 | | | | | | | | Total Depth = 5'<br>No Groundwater or Caving Encountered<br>Backfilled 1-26-21 |
| 10 | | | | | | | | |
| 15 | | | | | | | | |
| 20 | | | | | | | | |
| 25 | | | | | | | | |
| 30 | | | | | | | | |

*Standard Penetration Test*
*Undisturbed, Ring Sample*
*Groundwater*
*Seepage*

**GeoSoils, Inc.**

*PLATE* _____

**GeoSoils, Inc.**

# BORING LOG

*PROJECT:* OCEAN BREEZE
5280 W. Lilac Road, Bonsall

*W.O.* 6960-A12-SC *BORING* IB-110 *SHEET* 1 *OF* 1

*DATE EXCAVATED* 1-21-21 *LOGGED BY:* MS *APPROX. ELEV.:* 238'

*SAMPLE METHOD:* BASIN 3J

| Depth (ft.) | Sample: Bulk | Sample: Undisturbed | Sample: Blows/Ft. | USCS Symbol | Dry Unit Wt. (pcf) | Moisture (%) | Saturation (%) | Material Description |
|---|---|---|---|---|---|---|---|---|
| 0 | | | | SM<br>ML | | | | **COLLUVIUM:**<br>@ 0' SILTY SAND, light brown, dry, medium dense.<br>@ 1' SANDY SILT, dark reddish brown, damp, medium dense. |
| 5 | | | | | | | | Total Depth = 5'<br>No Groundwater or Caving Encountered<br>Backfilled 1-22-21 |
| 10 | | | | | | | | |
| 15 | | | | | | | | |
| 20 | | | | | | | | |
| 25 | | | | | | | | |
| 30 | | | | | | | | |

▼ *Standard Penetration Test*
⌶ *Undisturbed, Ring Sample*
▽ *Groundwater*
♀ *Seepage*

**GeoSoils, Inc.**

*PLATE* _____

**GeoSoils, Inc.**

# BORING LOG

*PROJECT:* OCEAN BREEZE
5280 W. Lilac Road, Bonsall

*W.O.* 6960-A12-SC *BORING* GW-16 *SHEET* 1 *OF* 1

*DATE EXCAVATED* 1-21-21 *LOGGED BY:* MS *APPROX. ELEV.:* 238'

*SAMPLE METHOD:* BASIN 3J

| Depth (ft.) | Sample: Bulk | Sample: Undisturbed | Sample: Blows/Ft. | USCS Symbol | Dry Unit Wt. (pcf) | Moisture (%) | Saturation (%) | Material Description |
|---|---|---|---|---|---|---|---|---|
| 0 | | | | SM<br>ML | | | | **COLLUVIUM:**<br>@ 0' SILTY SAND, light brown, dry, medium dense.<br>@ 1' SANDY SILT, dark reddish brown, damp, medium dense. |
| 5 | | | | SC | | | | @ 4' As per 1'; CLAYEY SAND. |
| 10 | | | | CL | | | | **WEATHERED GRANITICS:**<br>@ 8' SANDY CLAY, dark brown, damp, medium stiff (regolith). |
| 15 | | | | | | | | Total Depth = 15'<br>No Groundwater or Caving Encountered<br>Backfilled 1-22-21 |
| 20 | | | | | | | | |
| 25 | | | | | | | | |
| 30 | | | | | | | | |

▼ *Standard Penetration Test*
⌶ *Undisturbed, Ring Sample*
▽ *Groundwater*
♀ *Seepage*

**GeoSoils, Inc.**

*PLATE* _____

Basin 3J

## Percolation Test Data Sheet

| Project: | Ocean Breeze | Project No: | 6960-A12 | Date: | 1-22-21 |
|---|---|---|---|---|---|
| Test Hole No: | TB-109 | Tested By: | Matt S. | | |
| Depth of Test Hole, $D_T$: | 51" | USCS Soil Classification: | | | |
| Test Hole Dimensions (inches) | | | Length | Width | |
| Diameter (if round)= | 8" | Sides (if rectangular)= | | | |

Sandy Soil Criteria Test*

| Trial No. | Start Time | Stop Time | Time Interval, (min.) | Initial Depth to Water (in.) | Final Depth to Water (in.) | Change in Water Level (in.) | Greater than or Equal to 6"? (y/n) |
|---|---|---|---|---|---|---|---|
| 1 | 8:38 | 9:03 | 25 | 14.75 | 16.75" | 2.00 | N |
| 2 | 9:10 | 9:35 | 25 | 14.75" | 16.50" | 1.75 | N |

*If two consecutive measurements show that six inches of water seeps away in less than 25 minutes, the test shall be run for an additional hour with measurements taken every 10 minutes. Other wise, pre-soak (fill) overnight. Obtain at least twelve measurements per hole over at least six hours (approximately 30 minute intervals) with a precision of at least 0.25".

| Trial No. | Start Time | Stop Time | $\Delta t$ Time Interval (min.) | $D_o$ Initial Depth to Water (in.) | $D_f$ Final Depth to Water (in.) | $\Delta D$ Change in Water Level (in.) | Percolation Rate (min./in.) |
|---|---|---|---|---|---|---|---|
| 1 | 9:39 | 10:09 | 30 | 15.25" | 16.50" | 1.25 | 24 |
| 2 | 10:10 | 10:40 | ↓ | 15.50" | 16.50" | 1.00 | 30 |
| 3 | 10:42 | 11:12 | | 17.50 | 18.50" | 1.00 | 30 |
| 4 | 11:20 | 11:50 | | 16.00 | 17.00" | 1.00 | 30 |
| 5 | 11:50 | 12:20 | | 17.00" | 18.00" | 1.00 | 30 |
| 6 | 12:20 | 12:50 | | 16.25 | 17.25" | 1.00 | 30 |
| 7 | 12:50 | 1:20 | | 17.25" | 18.25" | 1.00 | 30 |
| 8 | 1:22 | 1:52 | | 16.75" | 17.50" | 0.75 | 40 |
| 9 | 1:52 | 2:22 | | 18.00 | 18.75 | 0.75 | 40 |
| 10 | 2:22 | 2:52 | | 18.75" | 19.50 | 0.75 | 40 |
| 11 | 2:53 | 3:23 | | 17.00 | 17.75 | 0.75 | 40 |
| 12 | 3:24 | 3:54 | ↓ | 17.75 | 18.50 | 0.75 | 40 |
| 13 | | | | | | | |
| 14 | | | | | | | |
| 15 | | | | | | | |

1.50 in/hr

COMMENTS: Cold, overcast, windy day

K= 0.09 in/hr

Table 5 – Sample Test Data Form for Percolation Test

Basin 3S

## Percolation Test Data Sheet

| Project: | Ocean Breeze | Project No: | 6960-A12 | Date: | 1-22-21 |
|---|---|---|---|---|---|
| Test Hole No: | IB-110 | Tested By: | Matt S. | | |
| Depth of Test Hole, $D_T$: | 55" | USCS Soil Classification: | | | |
| Test Hole Dimensions (inches) | | | | Length | Width |
| Diameter (if round)= | 8" | Sides (if rectangular)= | | | |

Sandy Soil Criteria Test*

| Trial No. | Start Time | Stop Time | Time Interval, (min.) | Initial Depth to Water (in.) | Final Depth to Water (in.) | Change in Water Level (in.) | Greater than or Equal to 6"? (Y/N) |
|---|---|---|---|---|---|---|---|
| 1 | 8:39 | 9:04 | 25 | 17.00 | 22.00 | 5.00 | N |
| 2 | 9:10 | 9:35 | 25 | 16.25" | 20.75 | 4.50 | N |

*If two consecutive measurements show that six inches of water seeps away in less than 25 minutes, the test shall be run for an additional hour with measurements taken every 10 minutes. Other wise, pre-soak (fill) overnight. Obtain at least twelve measurements per hole over at least six hours (approximately 30 minute intervals) with a precision of at least 0.25".

| Trial No. | Start Time | Stop Time | Δt Time Interval (min.) | $D_o$ Initial Depth to Water (in.) | $D_f$ Final Depth to Water (in.) | ΔD Change in Water Level (in.) | Percolation Rate (min./in.) |
|---|---|---|---|---|---|---|---|
| 1 | 9:40 | 10:10 | 30 | 17.50 | 20.50" | 3.00 | 10 |
| 2 | 10:11 | 10:41 | ↓ | 17.25 | 19.50 | 2.25 | 13.3 |
| 3 | 10:43 | 11:13 | | 17.00 | 19.25 | 2.25 | 13.3 |
| 4 | 11:20 | 11:50 | | 17.00" | 19.25 | 2.25 | 13.3 |
| 5 | 11:51 | 12:21 | | 18.00" | 20.25 | 2.25 | 13.3 |
| 6 | 12:21 | 12:51 | | 16.75 | 19.00 | 2.25 | 13.3 |
| 7 | 12:52 | 1:22 | | 17.25 | 19.50 | 2.25 | 13.3 |
| 8 | 1:22 | 1:52 | | 18.75 | 20.75" | 2.00 | 15 |
| 9 | 1:53 | 2:23 | | 18.25" | 20.00" | 1.75 | 17.1 |
| 10 | 2:23 | 2:53 | | 17.00" | 18.75" | 1.75 | 17.1 |
| 11 | 2:54 | 3:24 | | 17.25 | 19.00 | 1.75 | 17.1 |
| 12 | 3:25 | 3:55 | ↓ | 18.00 | 19.75 | 1.75 | 17.1 |
| 13 | | | | | | | |
| 14 | | | | | | | |
| 15 | | | | | | | |

3.50 in/hr

COMMENTS:

K= 0.18 in/hr

Table 5 – Sample Test Data Form for Percolation Test

## 7.4 Storm Water Pollutant Control Worksheet Calculations

- Use this page as a cover sheet for the submittal of any required worksheets below.
- Complete the checklist to identify which BMPDM Appendix B (Storm Water Pollutant Control Hydrologic Calculations and Sizing Methods) worksheets are included with this attachment.
- See BMPDM Appendix B for an explanation of the applicability of individual worksheets and detailed guidance on their completion.

| Worksheet | Requirement |
|---|---|
| ☒ Worksheet B.1 Calculation of Design Capture Volume (DCV) | Required |
| ☒ Worksheet B.2 Retention Requirements | Required |
| ☒ Worksheet B.3 BMP Performance | Required |
| ☒ Worksheet B.4 Major Maintenance Intervals for Reduced-sized BMPs | If applicable |
| ☒ Other worksheets | As required |

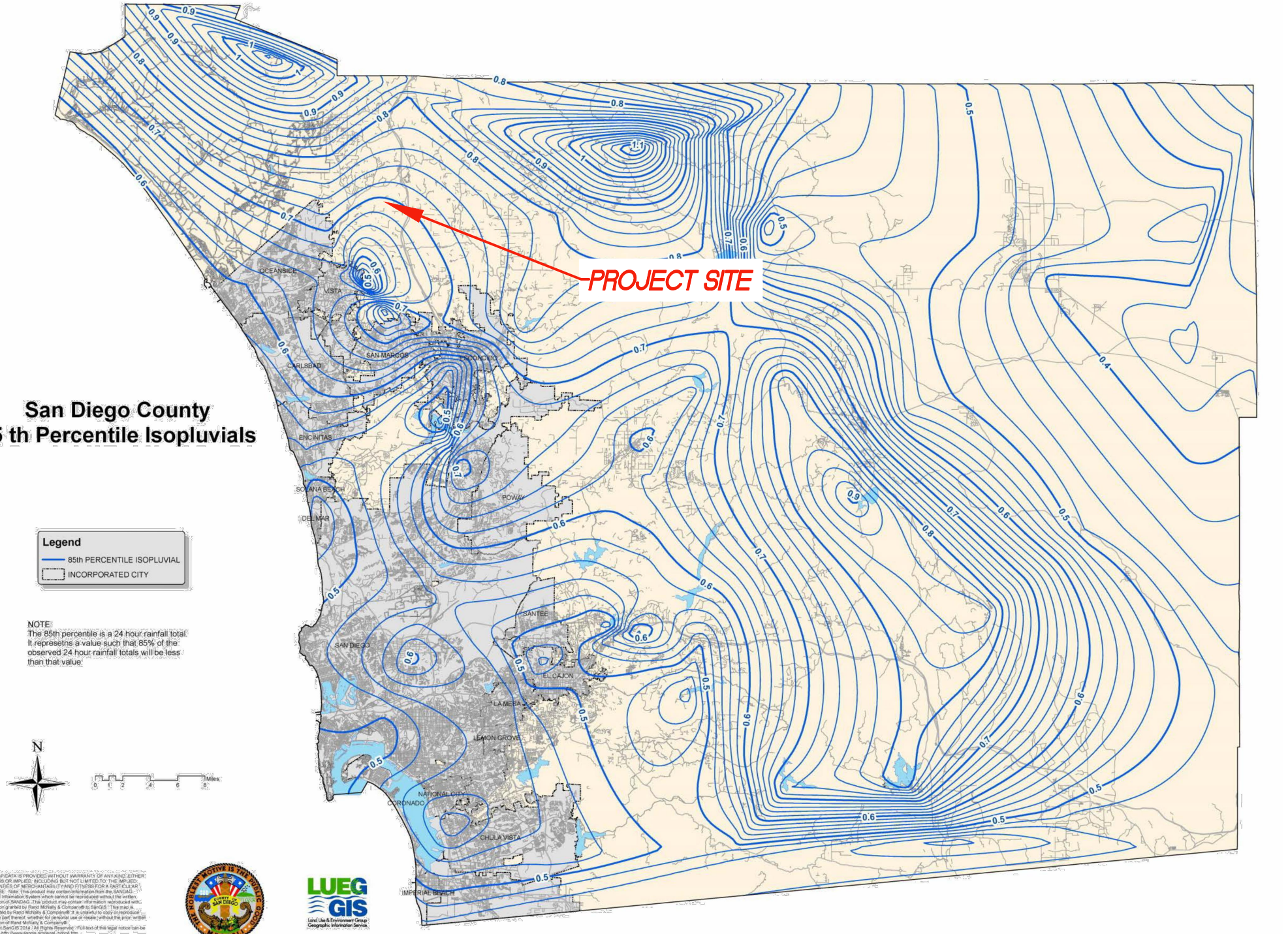


THIS MAP DATA IS PROVIDED WITHOUT WARRANTY OF ANY KIND, EITHER EXPRESS OR IMPLIED, INCLUDING BUT NOT LIMITED TO THE IMPLIED WARRANTIES OF MERCHANTABILITY AND FITNESS FOR A PARTICULAR PURPOSE. Note: This product may contain information from the SANDAG Regional Information System which cannot be reproduced without the written permission of SANDAG. This product may contain information reproduced with permission granted by Rand McNally & Company to SanGIS. This map is copyrighted by Rand McNally & Company®. It is unlawful to copy or reproduce all or any part thereof, whether for personal use or resale, without the prior written permission of Rand McNally & Company®.
Copyright SanGIS 2014. / All Rights Reserved. Full text of the legal notice can be found at http://www.sangis.org/legal_notice.htm

05/14/2015
P:\Flood Control\NOAA_ATLAS_14\PCT85_REVISITED_2015\PCT85_DISPLAY.mxd

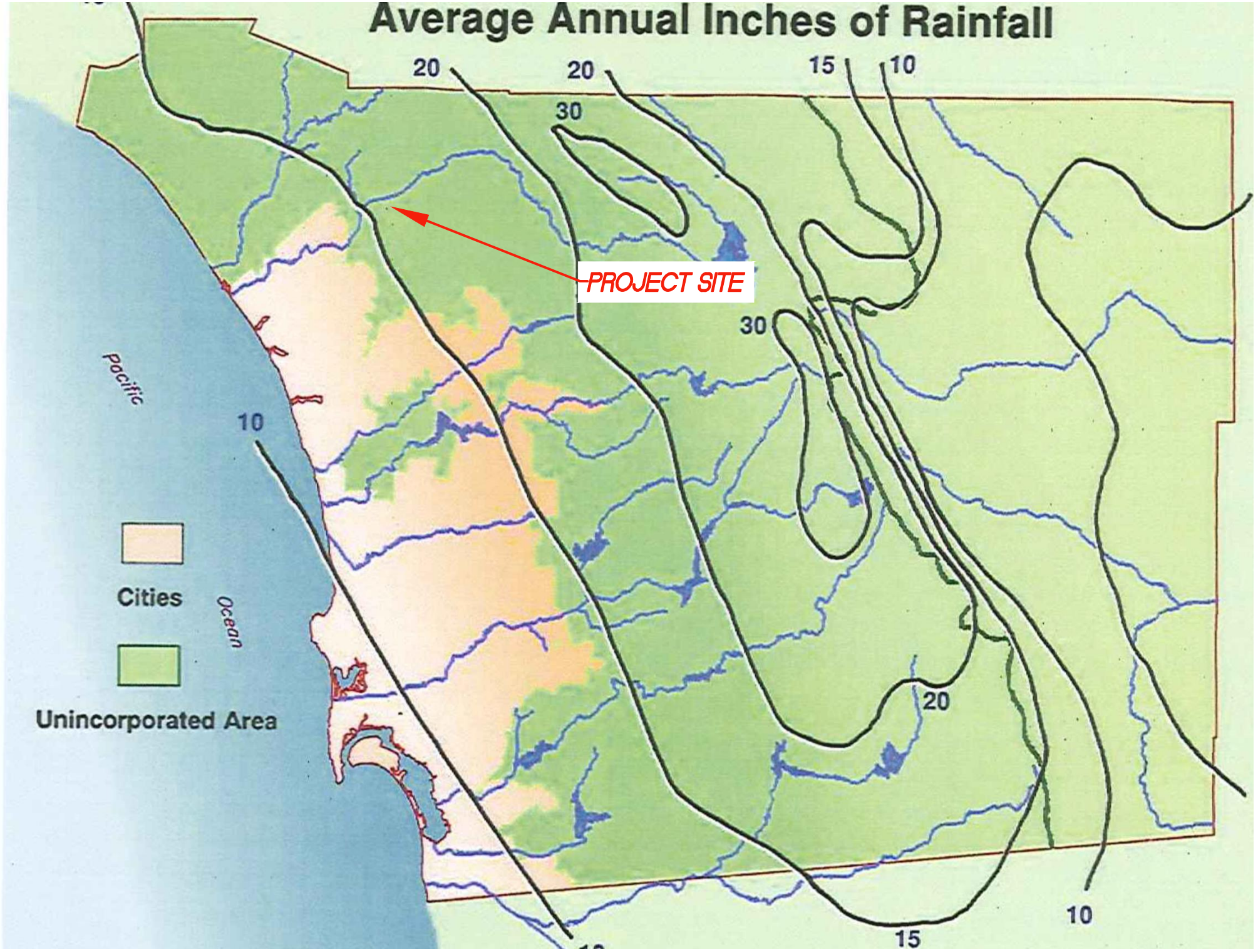
Average Annual Inches of Rainfall
20
20
15
10
30
PROJECT SITE
30
Pacific
10
Cities
Ocean
Unincorporated Area
20
10
15

## Automated Worksheet B.1: Calculation of Design Capture Volume (V2.0)

| Category | # | Description | *i* | *ii* | *iii* | *iv* | *v* | *vi* | *vii* | *viii* | *ix* | *x* | Units |
|---|---|---|---|---|---|---|---|---|---|---|---|---|---|
| Standard Drainage Basin Inputs | 1 | Drainage Basin ID or Name | 1A | 1B | 2A | 2B | 2C | 2D | 2E | 2F | 2G | 2H | unitless |
| | 2 | 85th Percentile 24-hr Storm Depth | 0.70 | 0.70 | 0.70 | 0.70 | 0.70 | 0.70 | 0.70 | 0.70 | 0.70 | 0.70 | inches |
| | 3 | Impervious Surfaces Not Directed to Dispersion Area (C=0.90) | 980,586 | 47,152 | 457,896 | 388,074 | 141,155 | 109,798 | 74,649 | 97,201 | 91,295 | 119,388 | sq-ft |
| | 4 | Semi-Pervious Surfaces Not Serving as Dispersion Area (C=0.30) | 559,608 | 16,106 | 198,264 | 275,600 | 20,136 | 7,140 | 6,307 | 7,369 | 12,467 | 93,291 | sq-ft |
| | 5 | Engineered Pervious Surfaces Not Serving as Dispersion Area (C=0.10) | 608,280 | 69,827 | 187,534 | 143,797 | 95,834 | 62,845 | 46,000 | 57,728 | 55,574 | | sq-ft |
| | 6 | Natural Type A Soil Not Serving as Dispersion Area (C=0.10) | | | | | | | | | | | sq-ft |
| | 7 | Natural Type B Soil Not Serving as Dispersion Area (C=0.14) | | 183,135 | | | | | | | | | sq-ft |
| | 8 | Natural Type C Soil Not Serving as Dispersion Area (C=0.23) | | | | | | | | | | | sq-ft |
| | 9 | Natural Type D Soil Not Serving as Dispersion Area (C=0.30) | | | | | | | | | | 151,109 | sq-ft |
| Dispersion Area, Tree Well & Rain Barrel Inputs (Optional) | 10 | Does Tributary Incorporate Dispersion, Tree Wells, and/or Rain Barrels? | No | No | No | No | No | No | No | No | No | No | yes/no |
| | 11 | Impervious Surfaces **Directed to Dispersion Area** per SD-B (Ci=0.90) | | | | | | | | | | | sq-ft |
| | 12 | Semi-Pervious Surfaces **Serving as Dispersion Area** per SD-B (Ci=0.30) | | | | | | | | | | | sq-ft |
| | 13 | Engineered Pervious Surfaces **Serving as Dispersion Area** per SD-B (Ci=0.10) | | | | | | | | | | | sq-ft |
| | 14 | Natural Type A Soil **Serving as Dispersion Area** per SD-B (Ci=0.10) | | | | | | | | | | | sq-ft |
| | 15 | Natural Type B Soil **Serving as Dispersion Area** per SD-B (Ci=0.14) | | | | | | | | | | | sq-ft |
| | 16 | Natural Type C Soil **Serving as Dispersion Area** per SD-B (Ci=0.23) | | | | | | | | | | | sq-ft |
| | 17 | Natural Type D Soil **Serving as Dispersion Area** per SD-B (Ci=0.30) | | | | | | | | | | | sq-ft |
| | 18 | Number of Tree Wells Proposed per SD-A | | | | | | | | | | | # |
| | 19 | Average Mature Tree Canopy Diameter | | | | | | | | | | | ft |
| | 20 | Number of Rain Barrels Proposed per SD-E | | | | | | | | | | | # |
| | 21 | Average Rain Barrel Size | | | | | | | | | | | gal |
| Initial Runoff Factor Calculation | 22 | Total Tributary Area | 2,148,474 | 316,220 | 843,694 | 807,471 | 257,125 | 179,783 | 126,956 | 162,298 | 159,336 | 363,788 | sq-ft |
| | 23 | Initial Runoff Factor for Standard Drainage Areas | 0.52 | 0.25 | 0.58 | 0.55 | 0.55 | 0.60 | 0.58 | 0.59 | 0.57 | 0.50 | unitless |
| | 24 | Initial Runoff Factor for Dispersed & Dispersion Areas | 0.00 | 0.00 | 0.00 | 0.00 | 0.00 | 0.00 | 0.00 | 0.00 | 0.00 | 0.00 | unitless |
| | 25 | Initial Weighted Runoff Factor | 0.52 | 0.25 | 0.58 | 0.55 | 0.55 | 0.60 | 0.58 | 0.59 | 0.57 | 0.50 | unitless |
| | 26 | Initial Design Capture Volume | 65,170 | 4,612 | 28,545 | 25,906 | 8,249 | 6,292 | 4,295 | 5,586 | 5,298 | 10,610 | cubic-feet |
| Dispersion Area Adjustments | 27 | Total Impervious Area Dispersed to Pervious Surface | 0 | 0 | 0 | 0 | 0 | 0 | 0 | 0 | 0 | 0 | sq-ft |
| | 28 | Total Pervious Dispersion Area | 0 | 0 | 0 | 0 | 0 | 0 | 0 | 0 | 0 | 0 | sq-ft |
| | 29 | Ratio of Dispersed Impervious Area to Pervious Dispersion Area | n/a | n/a | n/a | n/a | n/a | n/a | n/a | n/a | n/a | n/a | ratio |
| | 30 | Adjustment Factor for Dispersed & Dispersion Areas | 1.00 | 1.00 | 1.00 | 1.00 | 1.00 | 1.00 | 1.00 | 1.00 | 1.00 | 1.00 | ratio |
| | 31 | Runoff Factor After Dispersion Techniques | 0.52 | 0.25 | 0.58 | 0.55 | 0.55 | 0.60 | 0.58 | 0.59 | 0.57 | 0.50 | unitless |
| | 32 | Design Capture Volume After Dispersion Techniques | 65,170 | 4,612 | 28,545 | 25,906 | 8,249 | 6,292 | 4,295 | 5,586 | 5,298 | 10,610 | cubic-feet |
| Tree & Barrel Adjustments | 33 | Total Tree Well Volume Reduction | 0 | 0 | 0 | 0 | 0 | 0 | 0 | 0 | 0 | 0 | cubic-feet |
| | 34 | Total Rain Barrel Volume Reduction | 0 | 0 | 0 | 0 | 0 | 0 | 0 | 0 | 0 | 0 | cubic-feet |
| Results | 35 | Final Adjusted Runoff Factor | 0.52 | 0.25 | 0.58 | 0.55 | 0.55 | 0.60 | 0.58 | 0.59 | 0.57 | 0.50 | unitless |
| | 36 | Final Effective Tributary Area | 1,117,206 | 79,055 | 489,343 | 444,109 | 141,419 | 107,870 | 73,634 | 95,756 | 90,822 | 181,894 | sq-ft |
| | 37 | Initial Design Capture Volume Retained by Site Design Elements | 0 | 0 | 0 | 0 | 0 | 0 | 0 | 0 | 0 | 0 | cubic-feet |
| | 38 | Final Design Capture Volume Tributary to BMP | 65,170 | 4,612 | 28,545 | 25,906 | 8,249 | 6,292 | 4,295 | 5,586 | 5,298 | 10,610 | cubic-feet |

**No Warning Messages**

## Automated Worksheet B.2: Retention Requirements (V2.0)

| Category | # | Description | *i* | *ii* | *iii* | *iv* | *v* | *vi* | *vii* | *viii* | *ix* | *x* | Units |
|---|---|---|---|---|---|---|---|---|---|---|---|---|---|
| Basic Analysis | 1 | Drainage Basin ID or Name | 1A | 1B | 2A | 2B | 2C | 2D | 2E | 2F | 2G | 2H | unitless |
| | 2 | 85th Percentile Rainfall Depth | 0.70 | 0.70 | 0.70 | 0.70 | 0.70 | 0.70 | 0.70 | 0.70 | 0.70 | 0.70 | inches |
| | 3 | Predominant NRCS Soil Type Within BMP Location | A | D | A | A | A | A | A | A | A | D | unitless |
| | 4 | Is proposed BMP location Restricted or Unrestricted for Infiltration Activities? | Restricted | Restricted | Restricted | Restricted | Restricted | Restricted | Restricted | Restricted | Restricted | Restricted | unitless |
| | 5 | Nature of Restriction | Fill Depths | Soil Type | Groundwater | Groundwater | Groundwater | Groundwater | Groundwater | Groundwater | Groundwater | Soil Type | unitless |
| | 6 | Do Minimum Retention Requirements Apply to this Project? | Yes | Yes | Yes | Yes | Yes | Yes | Yes | Yes | Yes | Yes | yes/no |
| | 7 | Are Habitable Structures Greater than 9 Stories Proposed? | No | No | No | No | No | No | No | No | No | No | yes/no |
| Advanced Analysis | 8 | Has Geotechnical Engineer Performed an Infiltration Analysis? | Yes | Yes | Yes | Yes | Yes | Yes | Yes | Yes | Yes | Yes | yes/no |
| | 9 | Design Infiltration Rate Recommended by Geotechnical Engineer | 0.091 | 0.025 | 3.163 | 3.684 | 0.670 | 1.944 | 2.392 | 1.657 | 0.906 | 0.070 | in/hr |
| Result | 10 | Design Infiltration Rate Used To Determine Retention Requirements | 0.000 | 0.000 | 0.000 | 0.000 | 0.000 | 0.000 | 0.000 | 0.000 | 0.000 | 0.000 | in/hr |
| | 11 | Percent of Average Annual Runoff that Must be Retained within DMA | 1.5% | 1.5% | 1.5% | 1.5% | 1.5% | 1.5% | 1.5% | 1.5% | 1.5% | 1.5% | percentage |
| | 12 | Fraction of DCV Requiring Retention | 0.01 | 0.01 | 0.01 | 0.01 | 0.01 | 0.01 | 0.01 | 0.01 | 0.01 | 0.01 | ratio |
| | 13 | Required Retention Volume | 652 | 46 | 285 | 259 | 82 | 63 | 43 | 56 | 53 | 106 | cubic-feet |

**No Warning Messages**

# Automated Worksheet B.3: BMP Performance (V2.0)

| Category | # | Description | *i* | *ii* | *iii* | *iv* | *v* | *vi* | *vii* | *viii* | *ix* | *x* | Units |
|---|---|---|---|---|---|---|---|---|---|---|---|---|---|
| BMP Inputs | 1 | Drainage Basin ID or Name | 1A | 1B | 2A | 2B | 2C | 2D | 2E | 2F | 2G | 2H | sq-ft |
| | 2 | Design Infiltration Rate Recommended | 0.000 | 0.000 | 0.000 | 0.000 | 0.000 | 0.000 | 0.000 | 0.000 | 0.000 | 0.000 | in/hr |
| | 3 | Design Capture Volume Tributary to BMP | 65,170 | 4,612 | 28,545 | 25,906 | 8,249 | 6,292 | 4,295 | 5,586 | 5,298 | 10,610 | cubic-feet |
| | 4 | Is BMP Vegetated or Unvegetated? | Vegetated | Vegetated | Vegetated | Vegetated | Vegetated | Vegetated | Vegetated | Vegetated | Vegetated | Vegetated | unitless |
| | 5 | Is BMP Impermeably Lined or Unlined? | Lined | Lined | Lined | Lined | Lined | Lined | Lined | Lined | Lined | Lined | unitless |
| | 6 | Does BMP Have an Underdrain? | Underdrain | Underdrain | Underdrain | Underdrain | Underdrain | Underdrain | Underdrain | Underdrain | Underdrain | Underdrain | unitless |
| | 7 | Does BMP Utilize Standard or Specialized Media? | Standard | Standard | Standard | Standard | Standard | Standard | Standard | Standard | Standard | Standard | unitless |
| | 8 | Provided Surface Area | 45,538 | 2,615 | 16,805 | 14,551 | 3,197 | 2,780 | 2,435 | 2,143 | 2,544 | 6,843 | sq-ft |
| | 9 | Provided Surface Ponding Depth | 9 | 9 | 9 | 9 | 9 | 9 | 9 | 9 | 9 | 9 | inches |
| | 10 | Provided Soil Media Thickness | 21 | 21 | 21 | 21 | 21 | 21 | 21 | 21 | 21 | 21 | inches |
| | 11 | Provided Gravel Thickness (Total Thickness) | 15 | 15 | 15 | 15 | 15 | 15 | 15 | 15 | 15 | 15 | inches |
| | 12 | Underdrain Offset | 3 | 3 | 3 | 3 | 3 | 3 | 3 | 3 | 3 | 3 | inches |
| | 13 | Diameter of Underdrain or Hydromod Orifice (Select Smallest) | 3.80 | 1.50 | 4.50 | 8.00 | 8.00 | 8.00 | 8.00 | 8.00 | 8.00 | 2.00 | inches |
| | 14 | Specialized Soil Media Filtration Rate | | | | | | | | | | | in/hr |
| | 15 | Specialized Soil Media Pore Space for Retention | | | | | | | | | | | unitless |
| | 16 | Specialized Soil Media Pore Space for Biofiltration | | | | | | | | | | | unitless |
| | 17 | Specialized Gravel Media Pore Space | | | | | | | | | | | unitless |
| Retention Calculations | 18 | Volume Infiltrated Over 6 Hour Storm | 0 | 0 | 0 | 0 | 0 | 0 | 0 | 0 | 0 | 0 | cubic-feet |
| | 19 | Ponding Pore Space Available for Retention | 0.00 | 0.00 | 0.00 | 0.00 | 0.00 | 0.00 | 0.00 | 0.00 | 0.00 | 0.00 | unitless |
| | 20 | Soil Media Pore Space Available for Retention | 0.05 | 0.05 | 0.05 | 0.05 | 0.05 | 0.05 | 0.05 | 0.05 | 0.05 | 0.05 | unitless |
| | 21 | Gravel Pore Space Available for Retention (Above Underdrain) | 0.00 | 0.00 | 0.00 | 0.00 | 0.00 | 0.00 | 0.00 | 0.00 | 0.00 | 0.00 | unitless |
| | 22 | Gravel Pore Space Available for Retention (Below Underdrain) | 0.40 | 0.40 | 0.40 | 0.40 | 0.40 | 0.40 | 0.40 | 0.40 | 0.40 | 0.40 | unitless |
| | 23 | Effective Retention Depth | 2.25 | 2.25 | 2.25 | 2.25 | 2.25 | 2.25 | 2.25 | 2.25 | 2.25 | 2.25 | inches |
| | 24 | Fraction of DCV Retained (Independent of Drawdown Time) | 0.13 | 0.11 | 0.11 | 0.11 | 0.07 | 0.08 | 0.11 | 0.07 | 0.09 | 0.12 | ratio |
| | 25 | Calculated Retention Storage Drawdown Time | 120 | 120 | 120 | 120 | 120 | 120 | 120 | 120 | 120 | 120 | hours |
| | 26 | Efficacy of Retention Processes | 0.15 | 0.13 | 0.13 | 0.13 | 0.08 | 0.10 | 0.13 | 0.08 | 0.11 | 0.14 | ratio |
| | 27 | Volume Retained by BMP (Considering Drawdown Time) | 9,833 | 603 | 3,734 | 3,389 | 698 | 608 | 562 | 472 | 576 | 1,494 | cubic-feet |
| | 28 | Design Capture Volume Remaining for Biofiltration | 55,337 | 4,009 | 24,811 | 22,517 | 7,551 | 5,684 | 3,733 | 5,114 | 4,722 | 9,116 | cubic-feet |
| Biofiltration Calculations | 29 | Max Hydromod Flow Rate through Underdrain | 0.6932 | 0.1096 | 0.9679 | 2.9909 | 2.9909 | 2.9909 | 2.9909 | 2.9909 | 2.9909 | 0.1942 | cfs |
| | 30 | Max Soil Filtration Rate Allowed by Underdrain Orifice | 0.66 | 1.81 | 2.49 | 8.88 | 40.42 | 46.48 | 53.06 | 60.29 | 50.79 | 1.23 | in/hr |
| | 31 | Soil Media Filtration Rate per Specifications | 5.00 | 5.00 | 5.00 | 5.00 | 5.00 | 5.00 | 5.00 | 5.00 | 5.00 | 5.00 | in/hr |
| | 32 | Soil Media Filtration Rate to be used for Sizing | 0.66 | 1.81 | 2.49 | 5.00 | 5.00 | 5.00 | 5.00 | 5.00 | 5.00 | 1.23 | in/hr |
| | 33 | Depth Biofiltered Over 6 Hour Storm | 3.95 | 10.86 | 14.93 | 30.00 | 30.00 | 30.00 | 30.00 | 30.00 | 30.00 | 7.35 | inches |
| | 34 | Ponding Pore Space Available for Biofiltration | 1.00 | 1.00 | 1.00 | 1.00 | 1.00 | 1.00 | 1.00 | 1.00 | 1.00 | 1.00 | unitless |
| | 35 | Soil Media Pore Space Available for Biofiltration | 0.20 | 0.20 | 0.20 | 0.20 | 0.20 | 0.20 | 0.20 | 0.20 | 0.20 | 0.20 | unitless |
| | 36 | Gravel Pore Space Available for Biofiltration (Above Underdrain) | 0.40 | 0.40 | 0.40 | 0.40 | 0.40 | 0.40 | 0.40 | 0.40 | 0.40 | 0.40 | unitless |
| | 37 | Effective Depth of Biofiltration Storage | 18.00 | 18.00 | 18.00 | 18.00 | 18.00 | 18.00 | 18.00 | 18.00 | 18.00 | 18.00 | inches |
| | 38 | Drawdown Time for Surface Ponding | 14 | 5 | 4 | 2 | 2 | 2 | 2 | 2 | 2 | 7 | hours |
| | 39 | Drawdown Time for Effective Biofiltration Depth | 27 | 10 | 7 | 4 | 4 | 4 | 4 | 4 | 4 | 15 | hours |
| | 40 | Total Depth Biofiltered | 21.95 | 28.86 | 32.93 | 48.00 | 48.00 | 48.00 | 48.00 | 48.00 | 48.00 | 25.35 | inches |
| | 41 | Option 1 - Biofilter 1.50 DCV: Target Volume | 83,006 | 6,013 | 37,216 | 33,775 | 11,327 | 8,526 | 5,600 | 7,670 | 7,083 | 13,673 | cubic-feet |
| | 42 | Option 1 - Provided Biofiltration Volume | 83,006 | 6,013 | 37,216 | 33,775 | 11,327 | 8,526 | 5,600 | 7,670 | 7,083 | 13,673 | cubic-feet |
| | 43 | Option 2 - Store 0.75 DCV: Target Volume | 41,503 | 3,006 | 18,608 | 16,888 | 5,664 | 4,263 | 2,800 | 3,835 | 3,542 | 6,837 | cubic-feet |
| | 44 | Option 2 - Provided Storage Volume | 41,503 | 3,006 | 18,608 | 16,888 | 4,796 | 4,170 | 2,800 | 3,215 | 3,542 | 6,837 | cubic-feet |
| | 45 | Portion of Biofiltration Performance Standard Satisfied | 1.00 | 1.00 | 1.00 | 1.00 | 1.00 | 1.00 | 1.00 | 1.00 | 1.00 | 1.00 | ratio |
| Result | 46 | Do Site Design Elements and BMPs Satisfy Annual Retention Requirements? | Yes | Yes | Yes | Yes | Yes | Yes | Yes | Yes | Yes | Yes | yes/no |
| | 47 | Overall Portion of Performance Standard Satisfied (BMP Efficacy Factor) | 1.00 | 1.00 | 1.00 | 1.00 | 1.00 | 1.00 | 1.00 | 1.00 | 1.00 | 1.00 | ratio |
| | 48 | **Deficit of Effectively Treated Stormwater** | **0** | **0** | **0** | **0** | **0** | **0** | **0** | **0** | **0** | **0** | cubic-feet |

**Attention!**

- BMPs sized at <3% of the effective tributary areas must be accompanied by Reduced Size BMP Maintenance calculations (see last tab).

## Automated Worksheet B.4: Reduced Size BMP Maintenance Interval (V2.0)

| Category | # | Description | *i* | *ii* | *iii* | *iv* | *v* | *vi* | *vii* | *viii* | *ix* | *x* | Units |
|---|---|---|---|---|---|---|---|---|---|---|---|---|---|
| Drainage Basin Info | 1 | Drainage Basin ID or Name | - | - | - | - | 2C | 2D | - | 2F | 2G | - | unitless |
| | 2 | Final Effective Tributary Area | - | - | - | - | 141,419 | 107,870 | - | 95,756 | 90,822 | - | sq-ft |
| | 3 | Provided BMP Surface Area | - | - | - | - | 3,197 | 2,780 | - | 2,143 | 2,544 | - | sq-ft |
| Biofiltration Clogging Inputs | 4 | Average Annual Precipitation | | 15.3 | 15.3 | 15.3 | 15.3 | 15.3 | 15.3 | 15.3 | 15.3 | 15.3 | inches |
| | 5 | Load to Clog (default =2.0) | | 2.0 | 2.0 | 2.0 | 2.0 | 2.0 | 2.0 | 2.0 | 2.0 | 2.0 | lb/sq-ft |
| | 6 | TSS Pretreatment Efficacy | | 0.50 | 0.50 | 0.50 | 0.50 | 0.00 | 0.00 | 0.00 | 0.00 | 0.50 | yes/no |
| | 7 | Percentage "Commercial" | | 0% | 0% | 0% | 0% | 0% | 0% | 0% | 0% | 0% | percentage |
| | 8 | Percentage "Education" | | 0% | 0% | 0% | 0% | 0% | 0% | 0% | 0% | 0% | percentage |
| | 9 | Percentage "Industrial" | | 0% | 0% | 0% | 0% | 0% | 0% | 0% | 0% | 50% | percentage |
| | 10 | Percentage "Low Traffic Areas" | | 0% | 0% | 0% | 0% | 0% | 0% | 0% | 0% | 0% | percentage |
| | 11 | Percentage "Multi-Family Residential" | | 0% | 0% | 0% | 0% | 0% | 0% | 0% | 0% | 0% | percentage |
| | 12 | Percentage "Roof Areas" | | 0% | 0% | 0% | 0% | 0% | 0% | 0% | 0% | 0% | percentage |
| | 13 | Percentage "Single Family Residential" | | 50% | 80% | 80% | 100% | 100% | 100% | 100% | 100% | 0% | percentage |
| | 14 | Percentage "Transportation" | | 0% | 0% | 0% | 0% | 0% | 0% | 0% | 0% | 0% | percentage |
| | 15 | Percentage "Vacant/Open Space" | | 50% | 20% | 20% | 0% | 0% | 0% | 0% | 0% | 50% | percentage |
| | 16 | Percentage "Steep Hillslopes" | | 0% | 0% | 0% | 0% | 0% | 0% | 0% | 0% | 0% | percentage |
| Result | 17 | Total Percentage of Above Land Uses | 0% | 100% | 100% | 100% | 100% | 100% | 100% | 100% | 100% | 100% | percentage |
| | 18 | Average TSS Concentration for Tributary After Pretreatment | 0 | 18 | 22 | 22 | 25 | 49 | 49 | 49 | 49 | 34 | mg/L |
| | 19 | Average Annual Runoff Volume | 0 | 0 | 0 | 0 | 180,309 | 137,534 | 0 | 122,089 | 115,798 | 0 | cubic-feet |
| | 20 | Average Annual TSS Load | 0 | 0 | 0 | 0 | 281 | 421 | 0 | 373 | 354 | 0 | lb/yr |
| | 21 | Available Sediment Storage within BMP | 0 | 0 | 0 | 0 | 6,394 | 5,560 | 0 | 4,286 | 5,088 | 0 | lb |
| | 22 | Anticipated Major Maintenance Frequency | - | - | - | - | 22.7 | 13.2 | - | 11.5 | 14.4 | - | years |

**No Warning Messages**

| BASIN 1A (UPDATED 6/8/23) | | |
|---|---|---|
| | | |
| TOTAL DMA (SF) | | 2,148,474 |
| IMP (ROAD/SDWLK/DWY): | SIDEWALK/ROADWAY | 528,115 |
| | HOME/DWY | 394,728 |
| ADDITIONAL IMPERVIOUS: | 5' WIDE FOOTPATH | 14,544 |
| | 15'X20' BACK PATIO | 43,200 |
| TOTAL IMPERVIOUS | | 980,586 |
| SEMI PERVIOUS | | 559,608 |
| PERVIOUS | | 608,280 |
| | | 2,148,474 |
| | | |
| 144 HOMES | | |

| BASIN 2A (UPDATED 6/9/23) | | |
|---|---|---|
| | | |
| TOTAL DMA (SF) | | 843,694 |
| IMP (ROAD/SDWLK/DWY): | | 239,451 |
| | HOME/DWY | 186,835 |
| | | |
| | | |
| ADDITIONAL IMPERVIOUS: | 5' WIDE FOOTPATH | 8,510 |
| | 15'X20' BACK PATIO | 23,100 |
| TOTAL IMPERVIOUS | | 457,896 |
| SEMI PERVIOUS | | 198,264 |
| PERVIOUS | | 187,534 |
| | | 843,694 |
| 77 HOMES | | |

| BASIN 1B (UPDATED 7/3/2023) | | |
|---|---|---|
| TOTAL DMA (SF) | | 316,220 |
| IMP (ROAD/DWY/HOME ROOF) | | 47,152 |
| NATURAL PERVIOUS | SOIL B | 183,135 |
| PERVIOUS | LANDSCAPING | 69827 |
| SEMI-PERVIOUS | GRADED SLOPE (WEST SIDE) | 7054 |
| | BASIN | 9052 |
| SEI-PERVIOUS TOTAL | | 16106 |
| | | 316,220 |
| NO HOMES | | |

NOTES:

1) Home/DWY in PA 1 assumes an approximate 2720 SF per lot of imperviousness. Homes in PA2 assumes an approximate 2400 SF per lot of imperviousness.

2)Semi pervious areas include graded slopes and DG pathways

3) Pervious area included landscaping and engineered pervious areas.

| BASIN 2B (UPDATED 6/9/23) | | |
|---|---|---|
| **TOTAL DMA (SF)** | | 807,471 |
| **IMP (ROAD/SDWLK/DWY):** | | 263,443 |
| | HOME | 92,400 |
| | DWY (320 SF) | 14,191 |
| **ADDITIONAL IMPERVIOUS:** | 5' WIDE FOOTPATH | 4,840 |
| | 15'X20' BACK PATIO | 13,200 |
| **TOTAL IMPERVIOUS** | | 388,074 |
| **SEMI PERVIOUS** | | 275,600 |
| **PERVIOUS** | | 143,797 |
| | | 807,471 |
| 44 HOMES | | |

| BASIN 2C (6/13/23) | | |
|---|---|---|
| **TOTAL DMA (SF)** | | 257,125 |
| **IMP (ROAD/SDWLK/DWY):** | | 52,628 |
| | HOME | 72,000 |
| | DWY (320 SF) | 9,727 |
| **ADDITIONAL IMPERVIOUS:** | 5' WIDE FOOTPATH | 1,700 |
| | 15'X20' BACK PATIO | 5,100 |
| **TOTAL IMPERVIOUS** | | 141,155 |
| **SEMI PERVIOUS** | | 20,136 |
| **PERVIOUS** | | 95,834 |
| | | 257,125 |
| 17 HOMES | | |

| BASIN 2D (UPDATED 6/13/23) | | |
|---|---|---|
| **TOTAL DMA (SF)** | | 179,783 |
| **IMP (ROAD/SDWLK/DWY):** | | 56,186 |
| | HOME | 40,200 |
| | DWY (300 SF) | 6,272 |
| **ADDITIONAL IMPERVIOUS:** | 5' WIDE FOOTPATH | 2,040 |
| | 15'X20' BACK PATIO | 5,100 |
| | TOTAL IMPERVIOUS | 109,798 |
| **SEMI PERVIOUS** | | 7,140 |
| **PERVIOUS** | | 62,845 |
| | | 179,783 |
| 17 HOMES | | |

| BASIN 2E (UPDATED 6/13/23) | | |
|---|---|---|
| **TOTAL DMA (SF)** | | 126,956 |
| **IMP (ROAD/SDWLK/DWY):** | | 26,647 |
| | HOME | 36,000 |
| | DWY | 5,702 |
| | | |
| **ADDITIONAL IMPERVIOUS:** | 5' WIDE FOOTPATH | 1,800 |
| | 15'X20' BACK PATIO | 4,500 |
| | TOTAL IMPERVIOUS | 74,649 |
| **SEMI PERVIOUS** | | 6,307 |
| **PERVIOUS** | | 46,000 |
| | | 126,956 |
| 15 HOMES | | |

| BASIN 2F (6/13/2023) | | |
|---|---|---|
| **TOTAL DMA (SF)** | | 162,298 |
| **IMP (ROAD/SDWLK/DWY):** | | 43,292 |
| | HOME | 40,800 |
| | DWY (320 SF) | 6,309 |
| **ADDITIONAL IMPERVIOUS:** | 5' WIDE FOOTPATH | 1,700 |
| | 15'X20' BACK PATIO | 5,100 |
| | TOTAL IMPERVIOUS | 97,201 |
| **SEMI PERVIOUS** | | 7,369 |
| **PERVIOUS** | | 57,728 |
| | | 162,298 |
| 17 HOMES | | |

| BASIN 2G (UPDATED 6/13/23) | | |
|---|---|---|
| **TOTAL DMA (SF)** | | 159,336 |
| **IMP (ROAD/SDWLK/DWY):** | | 39,939 |
| | HOME | 37,800 |
| | DWY | 6,356 |
| | | |
| **ADDITIONAL IMPERVIOUS:** | 5' WIDE FOOTPATH | 1,800 |
| | 15'X20' BACK PATIO | 5,400 |
| | TOTAL IMPERVIOUS | 91,295 |
| **SEMI PERVIOUS** | | 12,467 |
| **PERVIOUS** | | 55,574 |
| | | 159,336 |
| 18 HOMES | | |

| BASIN 2H (UPDATED 8/5/24) | | |
|---|---|---|
| **TOTAL DMA (SF)** | | 363,788 |
| **IMP (ROAD/SDWLK/DWY):** | | 119,388 |
| | HOME | 0 |
| | DWY (320 SF) | 0 |
| | DWY (199-200) | 0 |
| **ADDITIONAL IMPERVIOUS:** | 5' WIDE FOOTPATH | 0 |
| | 15'X20' BACK PATIO | 0 |
| | TOTAL IMPERVIOUS | 119,388 |
| **SEMI PERVIOUS** | | 93,291 |
| **NATURAL PERVIOUS** | TYPE D | 151,109 |
| | | 363,788 |
| NO HOMES | | |

## Automated Worksheet B.1: Calculation of Design Capture Volume (V2.0)

| Category | # | Description | *i* | *ii* | *iii* | *iv* | *v* | *vi* | *vii* | *viii* | *ix* | *x* | Units |
|---|---|---|---|---|---|---|---|---|---|---|---|---|---|
| Standard Drainage Basin Inputs | 1 | Drainage Basin ID or Name | 3A | 3B | 3C | 3D | 3E | 3F | 3G | 3H | 3I | 3J | unitless |
| | 2 | 85th Percentile 24-hr Storm Depth | 0.70 | 0.70 | 0.70 | 0.70 | 0.70 | 0.70 | 0.70 | 0.70 | 0.70 | 0.70 | inches |
| | 3 | Impervious Surfaces Not Directed to Dispersion Area (C=0.90) | 60,459 | 31,154 | 106,583 | 203,770 | 35,645 | 56,892 | 51,140 | 35,328 | 27,033 | 11,213 | sq-ft |
| | 4 | Semi-Pervious Surfaces Not Serving as Dispersion Area (C=0.30) | 64,322 | 21,446 | 75,028 | 168,716 | 27,346 | 6,772 | 23,616 | 15,627 | 22,171 | 10,913 | sq-ft |
| | 5 | Engineered Pervious Surfaces Not Serving as Dispersion Area (C=0.10) | 2,422 | | 157,598 | 252,102 | | | 1,852 | 0 | 152,353 | 80,991 | sq-ft |
| | 6 | Natural Type A Soil Not Serving as Dispersion Area (C=0.10) | | | | | | | | | | | sq-ft |
| | 7 | Natural Type B Soil Not Serving as Dispersion Area (C=0.14) | | | | 1,559 | | | | | | | sq-ft |
| | 8 | Natural Type C Soil Not Serving as Dispersion Area (C=0.23) | 6,093 | | 46,344 | 19,337 | | | 17,193 | 0 | | | sq-ft |
| | 9 | Natural Type D Soil Not Serving as Dispersion Area (C=0.30) | | | | | | | | | | | sq-ft |
| Dispersion Area, Tree Well & Rain Barrel Inputs (Optional) | 10 | Does Tributary Incorporate Dispersion, Tree Wells, and/or Rain Barrels? | No | No | No | No | No | No | No | No | No | No | yes/no |
| | 11 | Impervious Surfaces **Directed to Dispersion Area** per SD-B (Ci=0.90) | | | | | | | | | | | sq-ft |
| | 12 | Semi-Pervious Surfaces **Serving as Dispersion Area** per SD-B (Ci=0.30) | | | | | | | | | | | sq-ft |
| | 13 | Engineered Pervious Surfaces **Serving as Dispersion Area** per SD-B (Ci=0.10) | | | | | | | | | | | sq-ft |
| | 14 | Natural Type A Soil **Serving as Dispersion Area** per SD-B (Ci=0.10) | | | | | | | | | | | sq-ft |
| | 15 | Natural Type B Soil **Serving as Dispersion Area** per SD-B (Ci=0.14) | | | | | | | | | | | sq-ft |
| | 16 | Natural Type C Soil **Serving as Dispersion Area** per SD-B (Ci=0.23) | | | | | | | | | | | sq-ft |
| | 17 | Natural Type D Soil **Serving as Dispersion Area** per SD-B (Ci=0.30) | | | | | | | | | | | sq-ft |
| | 18 | Number of Tree Wells Proposed per SD-A | | | | | | | | | | | # |
| | 19 | Average Mature Tree Canopy Diameter | | | | | | | | | | | ft |
| | 20 | Number of Rain Barrels Proposed per SD-E | | | | | | | | | | | # |
| | 21 | Average Rain Barrel Size | | | | | | | | | | | gal |
| Initial Runoff Factor Calculation | 22 | Total Tributary Area | 133,297 | 52,600 | 385,553 | 645,484 | 62,991 | 63,664 | 93,801 | 50,955 | 201,557 | 103,117 | sq-ft |
| | 23 | Initial Runoff Factor for Standard Drainage Areas | 0.57 | 0.66 | 0.38 | 0.41 | 0.64 | 0.84 | 0.61 | 0.72 | 0.23 | 0.21 | unitless |
| | 24 | Initial Runoff Factor for Dispersed & Dispersion Areas | 0.00 | 0.00 | 0.00 | 0.00 | 0.00 | 0.00 | 0.00 | 0.00 | 0.00 | 0.00 | unitless |
| | 25 | Initial Weighted Runoff Factor | 0.57 | 0.66 | 0.38 | 0.41 | 0.64 | 0.84 | 0.61 | 0.72 | 0.23 | 0.21 | unitless |
| | 26 | Initial Design Capture Volume | 4,432 | 2,025 | 8,546 | 15,438 | 2,352 | 3,120 | 3,338 | 2,140 | 2,704 | 1,263 | cubic-feet |
| Dispersion Area Adjustments | 27 | Total Impervious Area Dispersed to Pervious Surface | 0 | 0 | 0 | 0 | 0 | 0 | 0 | 0 | 0 | 0 | sq-ft |
| | 28 | Total Pervious Dispersion Area | 0 | 0 | 0 | 0 | 0 | 0 | 0 | 0 | 0 | 0 | sq-ft |
| | 29 | Ratio of Dispersed Impervious Area to Pervious Dispersion Area | n/a | n/a | n/a | n/a | n/a | n/a | n/a | n/a | n/a | n/a | ratio |
| | 30 | Adjustment Factor for Dispersed & Dispersion Areas | 1.00 | 1.00 | 1.00 | 1.00 | 1.00 | 1.00 | 1.00 | 1.00 | 1.00 | 1.00 | ratio |
| | 31 | Runoff Factor After Dispersion Techniques | 0.57 | 0.66 | 0.38 | 0.41 | 0.64 | 0.84 | 0.61 | 0.72 | 0.23 | 0.21 | unitless |
| | 32 | Design Capture Volume After Dispersion Techniques | 4,432 | 2,025 | 8,546 | 15,438 | 2,352 | 3,120 | 3,338 | 2,140 | 2,704 | 1,263 | cubic-feet |
| Tree & Barrel Adjustments | 33 | Total Tree Well Volume Reduction | 0 | 0 | 0 | 0 | 0 | 0 | 0 | 0 | 0 | 0 | cubic-feet |
| | 34 | Total Rain Barrel Volume Reduction | 0 | 0 | 0 | 0 | 0 | 0 | 0 | 0 | 0 | 0 | cubic-feet |
| Results | 35 | Final Adjusted Runoff Factor | 0.57 | 0.66 | 0.38 | 0.41 | 0.64 | 0.84 | 0.61 | 0.72 | 0.23 | 0.21 | unitless |
| | 36 | Final Effective Tributary Area | 75,979 | 34,716 | 146,510 | 264,648 | 40,314 | 53,478 | 57,219 | 36,688 | 46,358 | 21,655 | sq-ft |
| | 37 | Initial Design Capture Volume Retained by Site Design Elements | 0 | 0 | 0 | 0 | 0 | 0 | 0 | 0 | 0 | 0 | cubic-feet |
| | 38 | Final Design Capture Volume Tributary to BMP | 4,432 | 2,025 | 8,546 | 15,438 | 2,352 | 3,120 | 3,338 | 2,140 | 2,704 | 1,263 | cubic-feet |

**No Warning Messages**

## Automated Worksheet B.2: Retention Requirements (V2.0)

| Category | # | Description | *i* | *ii* | *iii* | *iv* | *v* | *vi* | *vii* | *viii* | *ix* | *x* | Units |
|---|---|---|---|---|---|---|---|---|---|---|---|---|---|
| Basic Analysis | 1 | Drainage Basin ID or Name | 3A | 3B | 3C | 3D | 3E | 3F | 3G | 3H | 3I | 3J | unitless |
| | 2 | 85th Percentile Rainfall Depth | 0.70 | 0.70 | 0.70 | 0.70 | 0.70 | 0.70 | 0.70 | 0.70 | 0.70 | 0.70 | inches |
| | 3 | Predominant NRCS Soil Type Within BMP Location | C | C | C | C | C | A | B | C | C | C | unitless |
| | 4 | Is proposed BMP location Restricted or Unrestricted for Infiltration Activities? | Restricted | Restricted | Unrestricted | Restricted | Restricted | Restricted | Restricted | Restricted | Restricted | Restricted | unitless |
| | 5 | Nature of Restriction | n/a | Other | n/a | Groundwater | n/a | Groundwater | Groundwater | Other | Structures | Other | unitless |
| | 6 | Do Minimum Retention Requirements Apply to this Project? | Yes | Yes | Yes | Yes | Yes | Yes | Yes | Yes | Yes | Yes | yes/no |
| | 7 | Are Habitable Structures Greater than 9 Stories Proposed? | No | No | No | No | No | No | No | No | No | No | yes/no |
| Advanced Analysis | 8 | Has Geotechnical Engineer Performed an Infiltration Analysis? | Yes | Yes | Yes | Yes | No | Yes | Yes | Yes | Yes | Yes | yes/no |
| | 9 | Design Infiltration Rate Recommended by Geotechnical Engineer | 0.040 | 0.035 | 0.510 | 0.040 | | 8.900 | 4.110 | 0.440 | 0.220 | 0.067 | in/hr |
| Result | 10 | Design Infiltration Rate Used To Determine Retention Requirements | 0.000 | 0.000 | 0.510 | 0.000 | 0.000 | 0.000 | 0.000 | 0.000 | 0.000 | 0.000 | in/hr |
| | 11 | Percent of Average Annual Runoff that Must be Retained within DMA | 1.5% | 1.5% | 80.0% | 1.5% | 1.5% | 1.5% | 1.5% | 1.5% | 1.5% | 1.5% | percentage |
| | 12 | Fraction of DCV Requiring Retention | 0.01 | 0.01 | 0.99 | 0.01 | 0.01 | 0.01 | 0.01 | 0.01 | 0.01 | 0.01 | ratio |
| | 13 | Required Retention Volume | 44 | 20 | 8461 | 154 | 24 | 31 | 33 | 21 | 27 | 13 | cubic-feet |

**No Warning Messages**

## Automated Worksheet B.3: BMP Performance (V2.0)

| Category | # | Description | *i* | *ii* | *iii* | *iv* | *v* | *vi* | *vii* | *viii* | *ix* | *x* | Units |
|---|---|---|---|---|---|---|---|---|---|---|---|---|---|
| BMP Inputs | 1 | Drainage Basin ID or Name | 3A | 3B | 3C | 3D | 3E | 3F | 3G | 3H | 3I | 3J | sq-ft |
| | 2 | Design Infiltration Rate Recommended | 0.000 | 0.000 | 0.510 | 0.000 | 0.000 | 0.000 | 0.000 | 0.000 | 0.000 | 0.000 | in/hr |
| | 3 | Design Capture Volume Tributary to BMP | 4,432 | 2,025 | 8,546 | 15,438 | 2,352 | 3,120 | 3,338 | 2,140 | 2,704 | 1,263 | cubic-feet |
| | 4 | Is BMP Vegetated or Unvegetated? | Vegetated | Vegetated | Vegetated | Vegetated | Vegetated | Vegetated | Vegetated | Vegetated | Vegetated | Vegetated | unitless |
| | 5 | Is BMP Impermeably Lined or Unlined? | Lined | Lined | Unlined | Lined | Lined | Lined | Lined | Lined | Lined | Lined | unitless |
| | 6 | Does BMP Have an Underdrain? | Underdrain | Underdrain | Underdrain | Underdrain | Underdrain | Underdrain | Underdrain | Underdrain | Underdrain | Underdrain | unitless |
| | 7 | Does BMP Utilize Standard or Specialized Media? | Standard | Standard | Standard | Standard | Standard | Standard | Standard | Standard | Standard | Standard | unitless |
| | 8 | Provided Surface Area | 2,422 | 3,361 | 7,232 | 15,325 | 1,600 | 1,619 | 1,852 | 1,757 | 2,992 | 2,628 | sq-ft |
| | 9 | Provided Surface Ponding Depth | 9 | 9 | 9 | 9 | 9 | 9 | 9 | 9 | 9 | 9 | inches |
| | 10 | Provided Soil Media Thickness | 21 | 21 | 21 | 21 | 21 | 21 | 21 | 21 | 21 | 21 | inches |
| | 11 | Provided Gravel Thickness (Total Thickness) | 15 | 15 | 15 | 15 | 15 | 15 | 15 | 15 | 15 | 15 | inches |
| | 12 | Underdrain Offset | 3 | 3 | 3 | 3 | 3 | 3 | 3 | 3 | 3 | 3 | inches |
| | 13 | Diameter of Underdrain or Hydromod Orifice (Select Smallest) | 3.00 | 2.00 | 2.00 | 1.00 | 0.60 | 0.60 | 1.20 | 2.00 | 4.00 | 2.00 | inches |
| | 14 | Specialized Soil Media Filtration Rate | | | | | | | | | | | in/hr |
| | 15 | Specialized Soil Media Pore Space for Retention | | | | | | | | | | | unitless |
| | 16 | Specialized Soil Media Pore Space for Biofiltration | | | | | | | | | | | unitless |
| | 17 | Specialized Gravel Media Pore Space | | | | | | | | | | | unitless |
| Retention Calculations | 18 | Volume Infiltrated Over 6 Hour Storm | 0 | 0 | 1,844 | 0 | 0 | 0 | 0 | 0 | 0 | 0 | cubic-feet |
| | 19 | Ponding Pore Space Available for Retention | 0.00 | 0.00 | 0.00 | 0.00 | 0.00 | 0.00 | 0.00 | 0.00 | 0.00 | 0.00 | unitless |
| | 20 | Soil Media Pore Space Available for Retention | 0.05 | 0.05 | 0.05 | 0.05 | 0.05 | 0.05 | 0.05 | 0.05 | 0.05 | 0.05 | unitless |
| | 21 | Gravel Pore Space Available for Retention (Above Underdrain) | 0.00 | 0.00 | 0.00 | 0.00 | 0.00 | 0.00 | 0.00 | 0.00 | 0.00 | 0.00 | unitless |
| | 22 | Gravel Pore Space Available for Retention (Below Underdrain) | 0.40 | 0.40 | 0.40 | 0.40 | 0.40 | 0.40 | 0.40 | 0.40 | 0.40 | 0.40 | unitless |
| | 23 | Effective Retention Depth | 2.25 | 2.25 | 2.25 | 2.25 | 2.25 | 2.25 | 2.25 | 2.25 | 2.25 | 2.25 | inches |
| | 24 | Fraction of DCV Retained (Independent of Drawdown Time) | 0.10 | 0.31 | 0.37 | 0.19 | 0.13 | 0.10 | 0.10 | 0.15 | 0.21 | 0.39 | ratio |
| | 25 | Calculated Retention Storage Drawdown Time | 120 | 120 | 6 | 120 | 120 | 120 | 120 | 120 | 120 | 120 | hours |
| | 26 | Efficacy of Retention Processes | 0.12 | 0.32 | 0.99 | 0.21 | 0.15 | 0.12 | 0.12 | 0.17 | 0.23 | 0.38 | ratio |
| | 27 | Volume Retained by BMP (Considering Drawdown Time) | 535 | 638 | 8,480 | 3,258 | 355 | 377 | 403 | 366 | 621 | 484 | cubic-feet |
| | 28 | Design Capture Volume Remaining for Biofiltration | 3,897 | 1,387 | 66 | 12,180 | 1,997 | 2,743 | 2,935 | 1,774 | 2,083 | 779 | cubic-feet |
| Biofiltration Calculations | 29 | Max Hydromod Flow Rate through Underdrain | 0.4342 | 0.1942 | 0.1942 | 0.0488 | 0.0176 | 0.0176 | 0.0702 | 0.1942 | 0.7672 | 0.1942 | cfs |
| | 30 | Max Soil Filtration Rate Allowed by Underdrain Orifice | 7.74 | 2.50 | 1.16 | 0.14 | 0.48 | 0.47 | 1.64 | 4.77 | 11.08 | 3.19 | in/hr |
| | 31 | Soil Media Filtration Rate per Specifications | 5.00 | 5.00 | 5.00 | 5.00 | 5.00 | 5.00 | 5.00 | 5.00 | 5.00 | 5.00 | in/hr |
| | 32 | Soil Media Filtration Rate to be used for Sizing | 5.00 | 2.50 | 1.16 | 0.14 | 0.48 | 0.47 | 1.64 | 4.77 | 5.00 | 3.19 | in/hr |
| | 33 | Depth Biofiltered Over 6 Hour Storm | 30.00 | 14.97 | 6.96 | 0.83 | 2.86 | 2.82 | 9.83 | 28.64 | 30.00 | 19.15 | inches |
| | 34 | Ponding Pore Space Available for Biofiltration | 1.00 | 1.00 | 1.00 | 1.00 | 1.00 | 1.00 | 1.00 | 1.00 | 1.00 | 1.00 | unitless |
| | 35 | Soil Media Pore Space Available for Biofiltration | 0.20 | 0.20 | 0.20 | 0.20 | 0.20 | 0.20 | 0.20 | 0.20 | 0.20 | 0.20 | unitless |
| | 36 | Gravel Pore Space Available for Biofiltration (Above Underdrain) | 0.40 | 0.40 | 0.40 | 0.40 | 0.40 | 0.40 | 0.40 | 0.40 | 0.40 | 0.40 | unitless |
| | 37 | Effective Depth of Biofiltration Storage | 18.00 | 18.00 | 18.00 | 18.00 | 18.00 | 18.00 | 18.00 | 18.00 | 18.00 | 18.00 | inches |
| | 38 | Drawdown Time for Surface Ponding | 2 | 4 | 5 | 65 | 19 | 19 | 5 | 2 | 2 | 3 | hours |
| | 39 | Drawdown Time for Effective Biofiltration Depth | 4 | 7 | 11 | 131 | 38 | 38 | 11 | 4 | 4 | 6 | hours |
| | 40 | Total Depth Biofiltered | 48.00 | 32.97 | 24.96 | 18.83 | 20.86 | 20.82 | 27.83 | 46.64 | 48.00 | 37.15 | inches |
| | 41 | Option 1 - Biofilter 1.50 DCV: Target Volume | 5,845 | 2,080 | 98 | 18,270 | 2,996 | 4,115 | 4,402 | 2,661 | 3,125 | 1,168 | cubic-feet |
| | 42 | Option 1 - Provided Biofiltration Volume | 5,845 | 2,080 | 98 | 18,270 | 2,781 | 2,809 | 4,295 | 2,661 | 3,125 | 1,168 | cubic-feet |
| | 43 | Option 2 - Store 0.75 DCV: Target Volume | 2,922 | 1,040 | 49 | 9,135 | 1,498 | 2,057 | 2,201 | 1,331 | 1,562 | 584 | cubic-feet |
| | 44 | Option 2 - Provided Storage Volume | 2,922 | 1,040 | 49 | 9,135 | 1,498 | 2,057 | 2,201 | 1,331 | 1,562 | 584 | cubic-feet |
| | 45 | Portion of Biofiltration Performance Standard Satisfied | 1.00 | 1.00 | 1.00 | 1.00 | 1.00 | 1.00 | 1.00 | 1.00 | 1.00 | 1.00 | ratio |
| Result | 46 | Do Site Design Elements and BMPs Satisfy Annual Retention Requirements? | Yes | Yes | Yes | Yes | Yes | Yes | Yes | Yes | Yes | Yes | yes/no |
| | 47 | Overall Portion of Performance Standard Satisfied (BMP Efficacy Factor) | 1.00 | 1.00 | 1.00 | 1.00 | 1.00 | 1.00 | 1.00 | 1.00 | 1.00 | 1.00 | ratio |
| | 48 | **Deficit of Effectively Treated Stormwater** | **0** | **0** | **0** | **0** | **0** | **0** | **0** | **0** | **0** | **0** | cubic-feet |

**Attention!**

-Vegetated BMPs with surface ponding drawdown times over 24 hours must be certified by a landscape architect or agronomist. All BMPs must have a surface ponding drawdown time of 96 hours or less.

| BASIN 3A (updated 5/23/2024) | TOTAL | 133,297 |
|---|---|---|
| IMPERVIOUS | ST/SDWLK | 60,459 |
| SEMI PERVIOUS | SLOPES/DG | 64,322 |
| PERVIOUS (BASIN SURF. AREA) | | 2,422 |
| NATURAL PERVIOUS | C | 6,093 |
| | | 133,297 |
| | | |

| BASIN 3B (updated 6/13/23) | TOTAL | 52,600 |
|---|---|---|
| IMPERVIOUS | ST/SDWLK | 31,154 |
| SEMI PERVIOUS | SLOPES/DG | 21,446 |
| PERVIOUS | | 0 |
| NATURAL PERVIOUS | C | 0 |
| | | 52,600 |
| | | |

| BASIN 3C (updated 5/23/24) | TOTAL | 385,553 |
|---|---|---|
| IMPERVIOUS | ST/SDWLK | 39,973 |
| | DWY | 27,570 |
| | HOME | 25,000 |
| | TENNIS CRT | 14,040 |
| | TOTAL | 106,583 |
| SEMI PERVIOUS | SLOPES/DG | 75,028 |
| PERVIOUS | | 157,598 |
| NATURAL PERVIOUS | C | 46,344 |
| | | 385,553 |
| | | |

| BASIN 3D (update 5/23/24) | TOTAL | 645,484 |
|---|---|---|
| IMPERVIOUS | ST/SDWLK | 91,964 |
| | DWY | 49,342 |
| | HOME | 40,000 |
| | TENNIS CRT | 22,464 |
| | TOTAL | 203,770 |
| SEMI PERVIOUS | SLOPES/DG | 168,716 |
| PERVIOUS | | 252,102 |
| NATURAL PERVIOUS | B | 1,559 |
| NATURAL PERVIOUS | C | 19337.22 |
| | | 645,484 |

| BASIN 3E (updated 6/13/23) | TOTAL | 62,991 |
|---|---|---|
| IMPERVIOUS | ST/SDWLK | 35,645 |
| SEMI PERVIOUS | SLOPES/DG | 27,346 |
| PERVIOUS | | 0 |
| NATURAL PERVIOUS | C | 0 |
| | | 62,991 |

| BASIN 3F (updated 7/21/2023) | TOTAL | 63,664 |
|---|---|---|
| IMPERVIOUS | ST/SDWLK | 56,892 |
| SEMI PERVIOUS | SLOPES/DG | 6,772 |
| PERVIOUS | | 0 |
| NATURAL PERVIOUS | C | 0 |
| | | 63,664 |

| BASIN 3I (updated 7/31/24) | TOTAL | 201,557 |
|---|---|---|
| IMPERVIOUS | ST/SDWLK | 0 |
| | HOME | 6,500 |
| | TENNIS CRT | 2808 |
| | DWY/entry pathway | 17275 |
| | PATIO/MISC | 450 |
| | TOTAL | 27,033 |
| SEMI PERVIOUS | SLOPES/DG | 22,171 |
| PERVIOUS | | 152,353 |
| NATURAL PERVIOUS | C | |
| | | 201,557 |

| BASIN 3J (7/3/2023) | TOTAL | 103,117 |
|---|---|---|
| IMPERVIOUS | ST/SDWLK | 0 |
| | HOME | 5000 |
| | TENNIS CRT | 2808 |
| | DWY | 2955 |
| | PATIO/MISC | 450 |
| | TOTAL | 11,213 |
| SEMI PERVIOUS | SLOPES/DG | 10,913 |
| PERVIOUS | | 80,991 |
| NATURAL PERVIOUS | C | |
| | | 103,117 |

| BASIN 3G (updated 6/14/23) | TOTAL | 93,801 |
|---|---|---|
| IMPERVIOUS | ST/SDWLK | 51,140 |
| SEMI PERVIOUS | SLOPES/DG | 23,616 |
| PERVIOUS (BASIN SURF. AREA)) | | 1,852 |
| PERVIOUS LANDSCAPE | C | 17,193 |
| | | 93,801 |

| BASIN 3H (updated 10/31/24) | TOTAL | 50,955 |
|---|---|---|
| IMPERVIOUS | ST/SDWLK/ ROOF | 35,328 |
| SEMI PERVIOUS | SLOPES/DG | 15,627 |
| Are | | 0 |
| NATURAL PERVIOUS | C | 0 |
| | | 50,955 |

NOTES:

1) Homes in PA3 approximate ~5000 SF of home and other imperviousness such as sidewalks to home and backyard.

# Automated Worksheet B.1: Calculation of Design Capture Volume (V2.0)

| Category | # | Description | *i* | *ii* | *iii* | *iv* | *v* | *vi* | *vii* | *viii* | *ix* | *x* | Units |
|---|---|---|---|---|---|---|---|---|---|---|---|---|---|
| Standard Drainage Basin Inputs | 1 | Drainage Basin ID or Name | 2I | 3K | | | | | | | | | unitless |
| | 2 | 85th Percentile 24-hr Storm Depth | 0.70 | 0.70 | | | | | | | | | inches |
| | 3 | Impervious Surfaces Not Directed to Dispersion Area (C=0.90) | 85,424 | 10,763 | | | | | | | | | sq-ft |
| | 4 | Semi-Pervious Surfaces Not Serving as Dispersion Area (C=0.30) | 5,873 | 10,275 | | | | | | | | | sq-ft |
| | 5 | Engineered Pervious Surfaces Not Serving as Dispersion Area (C=0.10) | 51,759 | 88,775 | | | | | | | | | sq-ft |
| | 6 | Natural Type A Soil Not Serving as Dispersion Area (C=0.10) | | | | | | | | | | | sq-ft |
| | 7 | Natural Type B Soil Not Serving as Dispersion Area (C=0.14) | | | | | | | | | | | sq-ft |
| | 8 | Natural Type C Soil Not Serving as Dispersion Area (C=0.23) | | | | | | | | | | | sq-ft |
| | 9 | Natural Type D Soil Not Serving as Dispersion Area (C=0.30) | | | | | | | | | | | sq-ft |
| Dispersion Area, Tree Well & Rain Barrel Inputs (Optional) | 10 | Does Tributary Incorporate Dispersion, Tree Wells, and/or Rain Barrels? | No | No | No | No | No | No | No | No | No | No | yes/no |
| | 11 | Impervious Surfaces **Directed to Dispersion Area** per SD-B (Ci=0.90) | | | | | | | | | | | sq-ft |
| | 12 | Semi-Pervious Surfaces **Serving as Dispersion Area** per SD-B (Ci=0.30) | | | | | | | | | | | sq-ft |
| | 13 | Engineered Pervious Surfaces **Serving as Dispersion Area** per SD-B (Ci=0.10) | | | | | | | | | | | sq-ft |
| | 14 | Natural Type A Soil **Serving as Dispersion Area** per SD-B (Ci=0.10) | | | | | | | | | | | sq-ft |
| | 15 | Natural Type B Soil **Serving as Dispersion Area** per SD-B (Ci=0.14) | | | | | | | | | | | sq-ft |
| | 16 | Natural Type C Soil **Serving as Dispersion Area** per SD-B (Ci=0.23) | | | | | | | | | | | sq-ft |
| | 17 | Natural Type D Soil **Serving as Dispersion Area** per SD-B (Ci=0.30) | | | | | | | | | | | sq-ft |
| | 18 | Number of Tree Wells Proposed per SD-A | | | | | | | | | | | # |
| | 19 | Average Mature Tree Canopy Diameter | | | | | | | | | | | ft |
| | 20 | Number of Rain Barrels Proposed per SD-E | | | | | | | | | | | # |
| | 21 | Average Rain Barrel Size | | | | | | | | | | | gal |
| Initial Runoff Factor Calculation | 22 | Total Tributary Area | 143,056 | 109,813 | 0 | 0 | 0 | 0 | 0 | 0 | 0 | 0 | sq-ft |
| | 23 | Initial Runoff Factor for Standard Drainage Areas | 0.59 | 0.20 | 0.00 | 0.00 | 0.00 | 0.00 | 0.00 | 0.00 | 0.00 | 0.00 | unitless |
| | 24 | Initial Runoff Factor for Dispersed & Dispersion Areas | 0.00 | 0.00 | 0.00 | 0.00 | 0.00 | 0.00 | 0.00 | 0.00 | 0.00 | 0.00 | unitless |
| | 25 | Initial Weighted Runoff Factor | 0.59 | 0.20 | 0.00 | 0.00 | 0.00 | 0.00 | 0.00 | 0.00 | 0.00 | 0.00 | unitless |
| | 26 | Initial Design Capture Volume | 4,924 | 1,281 | 0 | 0 | 0 | 0 | 0 | 0 | 0 | 0 | cubic-feet |
| Dispersion Area Adjustments | 27 | Total Impervious Area Dispersed to Pervious Surface | 0 | 0 | 0 | 0 | 0 | 0 | 0 | 0 | 0 | 0 | sq-ft |
| | 28 | Total Pervious Dispersion Area | 0 | 0 | 0 | 0 | 0 | 0 | 0 | 0 | 0 | 0 | sq-ft |
| | 29 | Ratio of Dispersed Impervious Area to Pervious Dispersion Area | n/a | n/a | n/a | n/a | n/a | n/a | n/a | n/a | n/a | n/a | ratio |
| | 30 | Adjustment Factor for Dispersed & Dispersion Areas | 1.00 | 1.00 | 1.00 | 1.00 | 1.00 | 1.00 | 1.00 | 1.00 | 1.00 | 1.00 | ratio |
| | 31 | Runoff Factor After Dispersion Techniques | 0.59 | 0.20 | n/a | n/a | n/a | n/a | n/a | n/a | n/a | n/a | unitless |
| | 32 | Design Capture Volume After Dispersion Techniques | 4,924 | 1,281 | 0 | 0 | 0 | 0 | 0 | 0 | 0 | 0 | cubic-feet |
| Tree & Barrel Adjustments | 33 | Total Tree Well Volume Reduction | 0 | 0 | 0 | 0 | 0 | 0 | 0 | 0 | 0 | 0 | cubic-feet |
| | 34 | Total Rain Barrel Volume Reduction | 0 | 0 | 0 | 0 | 0 | 0 | 0 | 0 | 0 | 0 | cubic-feet |
| Results | 35 | Final Adjusted Runoff Factor | 0.59 | 0.20 | 0.00 | 0.00 | 0.00 | 0.00 | 0.00 | 0.00 | 0.00 | 0.00 | unitless |
| | 36 | Final Effective Tributary Area | 84,403 | 21,963 | 0 | 0 | 0 | 0 | 0 | 0 | 0 | 0 | sq-ft |
| | 37 | Initial Design Capture Volume Retained by Site Design Elements | 0 | 0 | 0 | 0 | 0 | 0 | 0 | 0 | 0 | 0 | cubic-feet |
| | 38 | Final Design Capture Volume Tributary to BMP | 4,924 | 1,281 | 0 | 0 | 0 | 0 | 0 | 0 | 0 | 0 | cubic-feet |

**No Warning Messages**

## Automated Worksheet B.2: Retention Requirements (V2.0)

| Category | # | Description | *i* | *ii* | *iii* | *iv* | *v* | *vi* | *vii* | *viii* | *ix* | *x* | Units |
|---|---|---|---|---|---|---|---|---|---|---|---|---|---|
| Basic Analysis | 1 | Drainage Basin ID or Name | 2I | 3K | - | - | - | - | - | - | - | - | unitless |
| | 2 | 85th Percentile Rainfall Depth | 0.70 | 0.70 | - | - | - | - | - | - | - | - | inches |
| | 3 | Predominant NRCS Soil Type Within BMP Location | A | D | | | | | | | | | unitless |
| | 4 | Is proposed BMP location Restricted or Unrestricted for Infiltration Activities? | Restricted | Restricted | | | | | | | | | unitless |
| | 5 | Nature of Restriction | Fill Depths | Soil Type | | | | | | | | | unitless |
| | 6 | Do Minimum Retention Requirements Apply to this Project? | Yes | Yes | | | | | | | | | yes/no |
| | 7 | Are Habitable Structures Greater than 9 Stories Proposed? | No | No | | | | | | | | | yes/no |
| Advanced Analysis | 8 | Has Geotechnical Engineer Performed an Infiltration Analysis? | Yes | Yes | | | | | | | | | yes/no |
| | 9 | Design Infiltration Rate Recommended by Geotechnical Engineer | 0.091 | 0.025 | | | | | | | | | in/hr |
| Result | 10 | Design Infiltration Rate Used To Determine Retention Requirements | 0.000 | 0.000 | - | - | - | - | - | - | - | - | in/hr |
| | 11 | Percent of Average Annual Runoff that Must be Retained within DMA | 1.5% | 1.5% | - | - | - | - | - | - | - | - | percentage |
| | 12 | Fraction of DCV Requiring Retention | 0.01 | 0.01 | - | - | - | - | - | - | - | - | ratio |
| | 13 | Required Retention Volume | 49 | 13 | - | - | - | - | - | - | - | - | cubic-feet |

**No Warning Messages**

# Automated Worksheet B.3: BMP Performance (V2.0)

| Category | # | Description | *i* | *ii* | *iii* | *iv* | *v* | *vi* | *vii* | *viii* | *ix* | *x* | Units |
|---|---|---|---|---|---|---|---|---|---|---|---|---|---|
| BMP Inputs | 1 | Drainage Basin ID or Name | 2I | 3K | - | - | - | - | - | - | - | - | sq-ft |
| | 2 | Design Infiltration Rate Recommended | 0.000 | 0.000 | - | - | - | - | - | - | - | - | in/hr |
| | 3 | Design Capture Volume Tributary to BMP | 4,924 | 1,281 | - | - | - | - | - | - | - | - | cubic-feet |
| | 4 | Is BMP Vegetated or Unvegetated? | Vegetated | Vegetated | | | | | | | | | unitless |
| | 5 | Is BMP Impermeably Lined or Unlined? | Lined | Lined | | | | | | | | | unitless |
| | 6 | Does BMP Have an Underdrain? | Underdrain | Underdrain | | | | | | | | | unitless |
| | 7 | Does BMP Utilize Standard or Specialized Media? | Standard | Standard | | | | | | | | | unitless |
| | 8 | Provided Surface Area | 2,024 | 2,512 | | | | | | | | | sq-ft |
| | 9 | Provided Surface Ponding Depth | 9 | 9 | | | | | | | | | inches |
| | 10 | Provided Soil Media Thickness | 21 | 21 | | | | | | | | | inches |
| | 11 | Provided Gravel Thickness (Total Thickness) | 15 | 15 | | | | | | | | | inches |
| | 12 | Underdrain Offset | 3 | 3 | | | | | | | | | inches |
| | 13 | Diameter of Underdrain or Hydromod Orifice (Select Smallest) | 8.00 | 2.00 | | | | | | | | | inches |
| | 14 | Specialized Soil Media Filtration Rate | | | | | | | | | | | in/hr |
| | 15 | Specialized Soil Media Pore Space for Retention | | | | | | | | | | | unitless |
| | 16 | Specialized Soil Media Pore Space for Biofiltration | | | | | | | | | | | unitless |
| | 17 | Specialized Gravel Media Pore Space | | | | | | | | | | | unitless |
| Retention Calculations | 18 | Volume Infiltrated Over 6 Hour Storm | 0 | 0 | 0 | 0 | 0 | 0 | 0 | 0 | 0 | 0 | cubic-feet |
| | 19 | Ponding Pore Space Available for Retention | 0.00 | 0.00 | 1.00 | 1.00 | 1.00 | 1.00 | 1.00 | 1.00 | 1.00 | 1.00 | unitless |
| | 20 | Soil Media Pore Space Available for Retention | 0.05 | 0.05 | 0.05 | 0.05 | 0.05 | 0.05 | 0.05 | 0.05 | 0.05 | 0.05 | unitless |
| | 21 | Gravel Pore Space Available for Retention (Above Underdrain) | 0.00 | 0.00 | 0.40 | 0.40 | 0.40 | 0.40 | 0.40 | 0.40 | 0.40 | 0.40 | unitless |
| | 22 | Gravel Pore Space Available for Retention (Below Underdrain) | 0.40 | 0.40 | 0.40 | 0.40 | 0.40 | 0.40 | 0.40 | 0.40 | 0.40 | 0.40 | unitless |
| | 23 | Effective Retention Depth | 2.25 | 2.25 | 0.00 | 0.00 | 0.00 | 0.00 | 0.00 | 0.00 | 0.00 | 0.00 | inches |
| | 24 | Fraction of DCV Retained (Independent of Drawdown Time) | 0.08 | 0.37 | 0.00 | 0.00 | 0.00 | 0.00 | 0.00 | 0.00 | 0.00 | 0.00 | ratio |
| | 25 | Calculated Retention Storage Drawdown Time | 120 | 120 | 0 | 0 | 0 | 0 | 0 | 0 | 0 | 0 | hours |
| | 26 | Efficacy of Retention Processes | 0.10 | 0.37 | 0.00 | 0.00 | 0.00 | 0.00 | 0.00 | 0.00 | 0.00 | 0.00 | ratio |
| | 27 | Volume Retained by BMP (Considering Drawdown Time) | 476 | 469 | 0 | 0 | 0 | 0 | 0 | 0 | 0 | 0 | cubic-feet |
| | 28 | Design Capture Volume Remaining for Biofiltration | 4,448 | 812 | 0 | 0 | 0 | 0 | 0 | 0 | 0 | 0 | cubic-feet |
| Biofiltration Calculations | 29 | Max Hydromod Flow Rate through Underdrain | 2.9909 | 0.1942 | 0.0000 | 0.0000 | 0.0000 | 0.0000 | 0.0000 | 0.0000 | 0.0000 | 0.0000 | cfs |
| | 30 | Max Soil Filtration Rate Allowed by Underdrain Orifice | 63.84 | 3.34 | 0.00 | 0.00 | 0.00 | 0.00 | 0.00 | 0.00 | 0.00 | 0.00 | in/hr |
| | 31 | Soil Media Filtration Rate per Specifications | 5.00 | 5.00 | 5.00 | 5.00 | 5.00 | 5.00 | 5.00 | 5.00 | 5.00 | 5.00 | in/hr |
| | 32 | Soil Media Filtration Rate to be used for Sizing | 5.00 | 3.34 | 0.00 | 0.00 | 0.00 | 0.00 | 0.00 | 0.00 | 0.00 | 0.00 | in/hr |
| | 33 | Depth Biofiltered Over 6 Hour Storm | 30.00 | 20.04 | 0.00 | 0.00 | 0.00 | 0.00 | 0.00 | 0.00 | 0.00 | 0.00 | inches |
| | 34 | Ponding Pore Space Available for Biofiltration | 1.00 | 1.00 | 0.00 | 0.00 | 0.00 | 0.00 | 0.00 | 0.00 | 0.00 | 0.00 | unitless |
| | 35 | Soil Media Pore Space Available for Biofiltration | 0.20 | 0.20 | 0.20 | 0.20 | 0.20 | 0.20 | 0.20 | 0.20 | 0.20 | 0.20 | unitless |
| | 36 | Gravel Pore Space Available for Biofiltration (Above Underdrain) | 0.40 | 0.40 | 0.40 | 0.40 | 0.40 | 0.40 | 0.40 | 0.40 | 0.40 | 0.40 | unitless |
| | 37 | Effective Depth of Biofiltration Storage | 18.00 | 18.00 | 0.00 | 0.00 | 0.00 | 0.00 | 0.00 | 0.00 | 0.00 | 0.00 | inches |
| | 38 | Drawdown Time for Surface Ponding | 2 | 3 | 0 | 0 | 0 | 0 | 0 | 0 | 0 | 0 | hours |
| | 39 | Drawdown Time for Effective Biofiltration Depth | 4 | 5 | 0 | 0 | 0 | 0 | 0 | 0 | 0 | 0 | hours |
| | 40 | Total Depth Biofiltered | 48.00 | 38.04 | 0.00 | 0.00 | 0.00 | 0.00 | 0.00 | 0.00 | 0.00 | 0.00 | inches |
| | 41 | Option 1 - Biofilter 1.50 DCV: Target Volume | 6,672 | 1,218 | 0 | 0 | 0 | 0 | 0 | 0 | 0 | 0 | cubic-feet |
| | 42 | Option 1 - Provided Biofiltration Volume | 6,672 | 1,218 | 0 | 0 | 0 | 0 | 0 | 0 | 0 | 0 | cubic-feet |
| | 43 | Option 2 - Store 0.75 DCV: Target Volume | 3,336 | 609 | 0 | 0 | 0 | 0 | 0 | 0 | 0 | 0 | cubic-feet |
| | 44 | Option 2 - Provided Storage Volume | 3,036 | 609 | 0 | 0 | 0 | 0 | 0 | 0 | 0 | 0 | cubic-feet |
| | 45 | Portion of Biofiltration Performance Standard Satisfied | 1.00 | 1.00 | 0.00 | 0.00 | 0.00 | 0.00 | 0.00 | 0.00 | 0.00 | 0.00 | ratio |
| Result | 46 | Do Site Design Elements and BMPs Satisfy Annual Retention Requirements? | Yes | Yes | - | - | - | - | - | - | - | - | yes/no |
| | 47 | Overall Portion of Performance Standard Satisfied (BMP Efficacy Factor) | 1.00 | 1.00 | 0.00 | 0.00 | 0.00 | 0.00 | 0.00 | 0.00 | 0.00 | 0.00 | ratio |
| | 48 | **Deficit of Effectively Treated Stormwater** | **0** | **0** | **n/a** | **n/a** | **n/a** | **n/a** | **n/a** | **n/a** | **n/a** | **n/a** | cubic-feet |

**Attention!**

- BMPs sized at <3% of the effective tributary areas must be accompanied by Reduced Size BMP Maintenance calculations (see last tab).

## Automated Worksheet B.4: Reduced Size BMP Maintenance Interval (V2.0)

| Category | # | Description | *i* | *ii* | *iii* | *iv* | *v* | *vi* | *vii* | *viii* | *ix* | *x* | Units |
|---|---|---|---|---|---|---|---|---|---|---|---|---|---|
| **Drainage Basin Info** | 1 | Drainage Basin ID or Name | 2I | - | - | - | - | - | - | - | - | - | unitless |
| | 2 | Final Effective Tributary Area | 84,403 | - | - | - | - | - | - | - | - | - | sq-ft |
| | 3 | Provided BMP Surface Area | 2,024 | - | - | - | - | - | - | - | - | - | sq-ft |
| **Biofiltration Clogging Inputs** | 4 | Average Annual Precipitation | 15.3 | | | | | | | | | | inches |
| | 5 | Load to Clog (default =2.0) | 2.0 | | | | | | | | | | lb/sq-ft |
| | 6 | TSS Pretreatment Efficacy | 0.00 | | | | | | | | | | yes/no |
| | 7 | Percentage "Commercial" | | | | | | | | | | | percentage |
| | 8 | Percentage "Education" | | | | | | | | | | | percentage |
| | 9 | Percentage "Industrial" | | | | | | | | | | | percentage |
| | 10 | Percentage "Low Traffic Areas" | | | | | | | | | | | percentage |
| | 11 | Percentage "Multi-Family Residential" | | | | | | | | | | | percentage |
| | 12 | Percentage "Roof Areas" | | | | | | | | | | | percentage |
| | 13 | Percentage "Single Family Residential" | 100% | | | | | | | | | | percentage |
| | 14 | Percentage "Transportation" | | | | | | | | | | | percentage |
| | 15 | Percentage "Vacant/Open Space" | | | | | | | | | | | percentage |
| | 16 | Percentage "Steep Hillslopes" | | | | | | | | | | | percentage |
| **Result** | 17 | Total Percentage of Above Land Uses | 100% | 0% | 0% | 0% | 0% | 0% | 0% | 0% | 0% | 0% | percentage |
| | 18 | Average TSS Concentration for Tributary After Pretreatment | 49 | 0 | 0 | 0 | 0 | 0 | 0 | 0 | 0 | 0 | mg/L |
| | 19 | Average Annual Runoff Volume | 107,614 | 0 | 0 | 0 | 0 | 0 | 0 | 0 | 0 | 0 | cubic-feet |
| | 20 | Average Annual TSS Load | 329 | 0 | 0 | 0 | 0 | 0 | 0 | 0 | 0 | 0 | lb/yr |
| | 21 | Available Sediment Storage within BMP | 4,048 | 0 | 0 | 0 | 0 | 0 | 0 | 0 | 0 | 0 | lb |
| | 22 | Anticipated Major Maintenance Frequency | 12.3 | - | - | - | - | - | - | - | - | - | years |

**No Warning Messages**

| BASIN 2I (UPDATED 6/13/23) | | |
|---|---|---|
| | | |
| TOTAL DMA (SF) | | 143,056 |
| **IMP (ROAD/SDWLK/DWY):** | SIDEWALK/ROADWAY | 34,513 |
| | HOME | 38,400 |
| | DWY | 6,095 |
| ADDITIONAL IMPERVIOUS: | 5' WIDE FOOTPATH | 1,616 |
| | 15'X20' BACK PATIO | 4,800 |
| TOTAL IMPERVIOUS | | 85,424 |
| SEMI PERVIOUS | | 5,873 |
| PERVIOUS | | 51,759 |
| | | 143,056 |
| 16 HOMES | | |

| BASIN 3K (UPDATED 7/3/2023) | | |
|---|---|---|
| | | |
| TOTAL DMA (SF) | | 109,813 |
| **IMP (ROAD/SDWLK/DWY):** | | 0 |
| | HOME/DWY | 5000 |
| | | |
| | | |
| | | |
| ADDITIONAL IMPERVIOUS: | TENNIS CRT | 2,808 |
| | DWY | 2,955 |
| TOTAL IMPERVIOUS | | 10,763 |
| SEMI PERVIOUS | | 10,275 |
| PERVIOUS | | 88,775 |
| | | 109,813 |
| 77 HOMES | | |

NOTES:

1) Homes in PA2 assumes an approximate 2400 SF per lot of imperviousness. DMA 3K has one estate home and sidewalks of ~5000 SF

# PRE-TREATMENT BMP CALCULATIONS

Pre-treatment Calculations for WQ Flowrate

| BMP ID | BASIN | Node | Q100 (cfs) | A (ac) | C | Qwq (cfs) | Size of NSBB Pre-treatment |
|---|---|---|---|---|---|---|---|
| 1A-1 | 1A | 1074 | 150.6 | 35.7 | 0.52 | 3.71 | NSBB-1020 |
| 1A-2 | 1A | 1105 | 18.4 | 3.6 | 0.87 | 0.63 | NSBB-48 |
| 1A-3 | 1A | 1211 | 36.6 | 6.7 | 0.67 | 0.90 | NSBB-816 |
| 1B-1 | 1B | 1334 | 13.5 | 7.05 | 0.25 | 0.35 | NSBB-48 |
| 2A-1 | 2A | 2120 | 42.2 | 11.21 | 0.58 | 1.30 | NSBB-612 |
| 2A-2 | 2A | 2220 | 24.7 | 6.82 | 0.58 | 0.79 | NSBB-48 |
| 2B-1 | 2B | 2317 | 40.3 | 11.7 | 0.55 | 1.29 | NSBB-612 |
| 2C-1 | 2C | 2051 | 19.5 | 5.65 | 0.55 | 0.62 | NSBB-48 |
| 2H-1 | 2H | 4004 | 29.4 | 8.3 | 0.56 | 0.93 | NSBB-612 |
| 3C-1 | 3C | 3212 | 19.7 | 9.17 | 0.33 | 0.61 | NSBB-816 |
| 3D-1 | 3D | 3222 | 55.6 | 15.23 | 0.43 | 1.31 | NSBB-612 |

Note:

1) C values were determined from an area weighted runoff factors based on overall DMA in Worksheet 7.4

| SITE SPECIFIC DATA | | | |
|---|---|---|---|
| Structure ID | | | Basin 1A-1 |
| Water Quality Flow Rate (cfs) | | | 4.22 |
| Peak Flow Rate (cfs) | | | 142.60 |
| Rim Elevation | | | 245.60' |
| Top of Vault Elevation | | | 235.68' |
| **Pipe Data** | **Pipe Size** | **Pipe Type** | **Invert Elevation** |
| Inlet | 54" | HDPE | 229.30' |
| Outlet | 54" | RCP | 229.10' |
| Notes: | | | |

| PERFORMANCE SPECIFICATIONS | |
|---|---|
| Screen System Storage Volume | 197.22 cf |
| Total Sump Volume | 1440.83 cf |
| NJDEP Sediment Storage Volume | 95.00 cf |
| Peak Flow Capacity* | 182.60 cfs |
| Treatment Flow Capacities:* | |
| NJDEP 50% Removal, 75 micron | 15.56 cfs |
| 80% Removal, 150 micron | 45.40 cfs |

*Contact Oldcastle for additional treatment and peak flow capacities.

**ALL PIPE ANGLES TO BE IMMEDIATELY OUTSIDE OF THE STRUCTURE, BY OTHERS.**

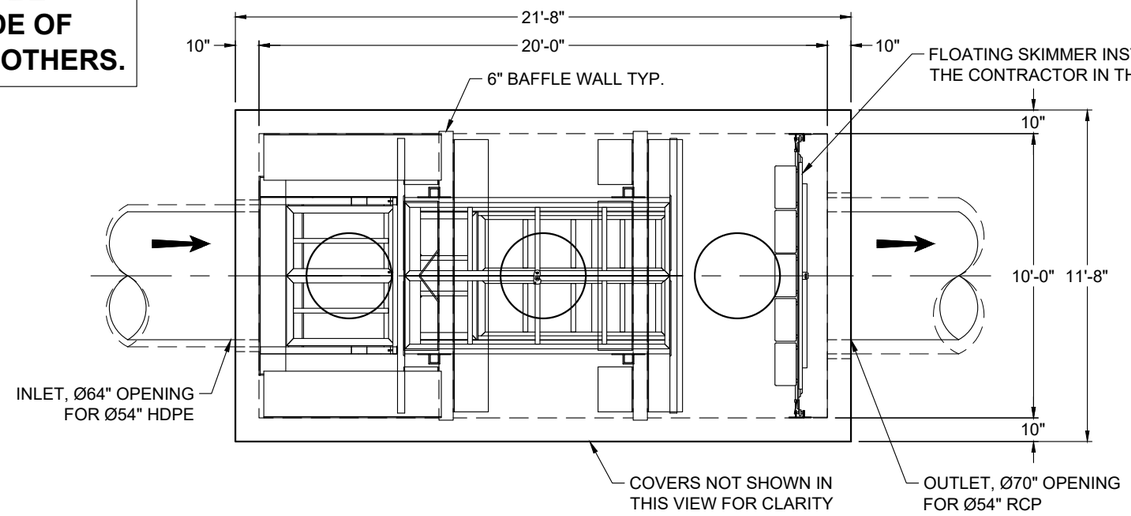


PLAN VIEW

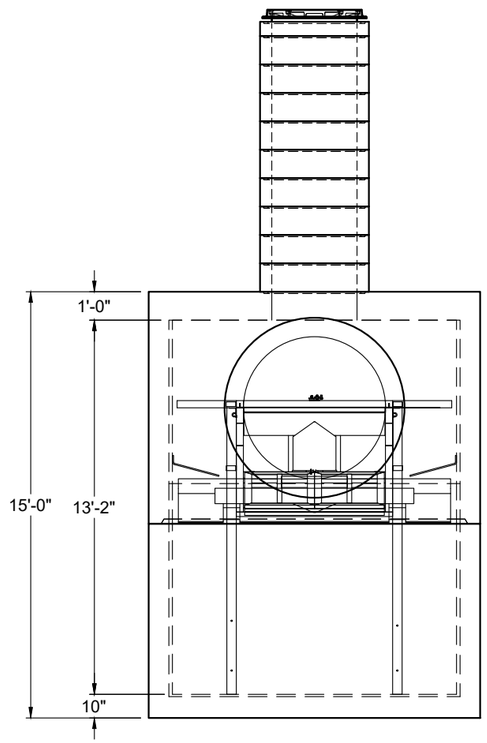


LEFT END VIEW

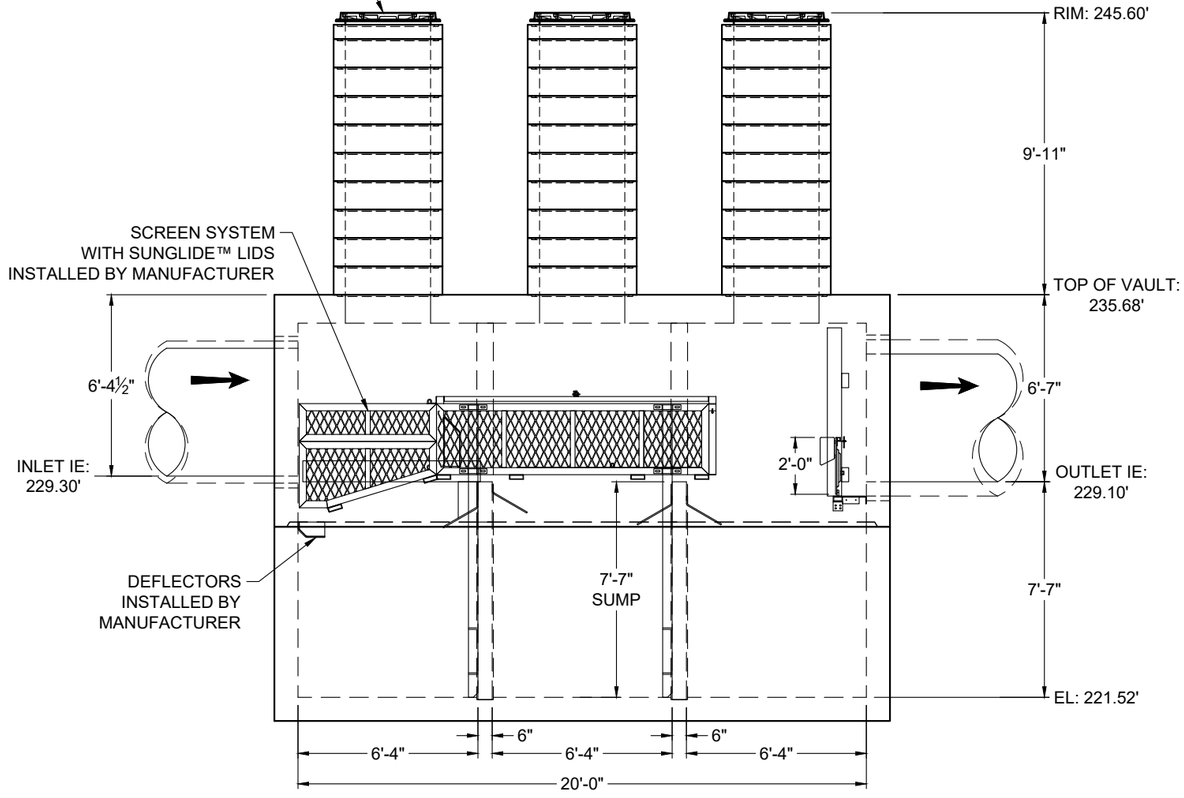


ELEVATION VIEW

NOTES:

1. DESIGN LOADINGS:
   A. AASHTO HS-20-44 (WITH IMPACT)
   B. DESIGN SOIL COVER: 10'-0" MAXIMUM
   C. ASSUMED WATER TABLE: BELOW BASE OF PRECAST (ENGINEER-OF-RECORD TO CONFIRM SITE WATER TABLE ELEVATION)
   D. LATERAL EARTH PRESSURE: 45 PCF (DRAINED)
   E. LATERAL LIVE LOAD SURCHARGE: 80 PSF (APPLIED TO 8'-0" BELOW GRADE)
   F. NO LATERAL SURCHARGE FROM ADJACENT BUILDINGS, WALLS, PIERS, OR FOUNDATIONS.
2. CONCRETE 28-DAY MINIMUM COMPRESSIVE STRENGTH: 5,000 PSI MINIMUM.
3. REINFORCING: REBAR, ASTM A615/A706, GRADE 60
4. CEMENT: ASTM C150
5. REQ'D ALLOWABLE SOIL BEARING CAPACITY: 2,500 PSF
6. REFERENCE STANDARD:
   A. ASTM C890
   B. ASTM C913
   C. ACI 318-14
7. THIS STRUCTURE IS DESIGNED TO THE PARAMETERS NOTED HEREIN. ENGINEER-OF-RECORD SHALL VERIFY THAT NOTED PARAMETERS MEET OR EXCEED PROJECT REQUIREMENTS. IF DESIGN PARAMETERS ARE INCORRECT, REVIEWING ENGINEER/AUTHORITY SHALL NOTIFY OLDCASTLE INFRASTRUCTURE UPON REVIEW OF THIS SUBMITTAL.
8. OVERSIZED HOLES TO ACCOMMODATE SPECIFIC PIPE TYPE MUST BE CONCENTRIC TO PIPE ID. AFTER PIPES ARE INSTALLED, ALL ANNULAR SPACES SHALL BE FILLED WITH A MINIMUM OF 3,000 PSI CONCRETE FOR FULL THICKNESS OF PRECAST WALLS. PIPES ARE TO BE FLUSH WITH THE INSIDE SURFACE OF THE CONCRETE STRUCTURE.
9. CONTRACTOR RESPONSIBLE TO VERIFY ALL SIZES, LOCATIONS, AND ELEVATIONS OF OPENINGS.
10. CONTRACTOR RESPONSIBLE TO ENSURE ADEQUATE BEARING SURFACE IS PROVIDED (I.E. COMPACTED AND LEVEL PER PROJECT SPECIFICATIONS).
11. SECTION HEIGHTS, SLAB/WALL THICKNESSES, AND KEYWAYS ARE SUBJECT TO CHANGE AS REQUIRED FOR SITE REQUIREMENTS AND/OR DUE TO PRODUCT AVAILABILITY AND PRODUCTION FACILITY CONSTRAINTS.
12. FOR SITE SPECIFIC DRAWINGS WITH DETAILED STRUCTURE DIMENSIONS AND WEIGHTS, PLEASE CONTACT OLDCASTLE INFRASTRUCTURE.
13. MAXIMUM PICK WEIGHT: 79,400 LBS. (* COMBINED WEIGHT INCLUDES BAFFLE WALLS AND PRODUCT INTERNALS.)
14. INTERNALS SHALL CONSIST OF A FLOATING SKIMMER, FLOW DEFLECTORS, ELEVATED CENTRAL SCREEN SYSTEM AND SLIDING LIDS. THESE COMPONENTS EFFECTIVELY REDUCE HEAD LOSS, INCREASE POLLUTANT REMOVAL AND SIMPLIFY MAINTENANCE.

**- PRELIMINARY - NOT FOR CONSTRUCTION**

THIS PRODUCT IS PROTECTED BY ONE OR MORE OF THE FOLLOWING US PATENT(S): 6,428,692; 7,270,747; 7,981,283; 8,142,666; 8,366,923; 8,491,797; 7,846,327; 8,034,236; RELATED FOREIGN PATENTS, OR OTHER PATENTS PENDING.

Oldcastle Infrastructure™ A CRH COMPANY
Ph: 800.579.8819 | www.oldcastleinfrastructure.com/stormwater

THIS DOCUMENT IS THE PROPERTY OF OLDCASTLE INFRASTRUCTURE, INC. IT IS CONFIDENTIAL, SUBMITTED FOR REFERENCE PURPOSES ONLY AND SHALL NOT BE USED IN ANY WAY INJURIOUS TO THE INTERESTS OF, OR WITHOUT THE WRITTEN PERMISSION OF OLDCASTLE INFRASTRUCTURE, INC. COPYRIGHT © 2024 OLDCASTLE INFRASTRUCTURE, INC. ALL RIGHTS RESERVED.

Nutrient Separating Baffle Box®
NSBB-1020

CUSTOMER: Bowman

PROJECT NAME: Ocean Breeze Ranch (OBR) - Bonsall,CA

| DATE | MFG | DRAWN | ENGINEER | CHECKED | SALES ORDER |
|---|---|---|---|---|---|
| 6/6/24 | 070-FO | PPS | HMF | HMF | - |

| SHEET NAME | REVISION | SHEET |
|---|---|---|
| 21-603205-NSBB-1020_Basin 1A-1 | 1<br>REV DATE 10/28/24 | 1 OF 1 |

21-603205-NSBB-1020_Basin 1A-1.dwg, 2024-10-28 4:49 PM,Akshata Savant,38.9165

| SITE SPECIFIC DATA | |
|---|---|
| Structure ID | Basin 1A-2 |
| Water Quality Flow Rate (cfs) | 0.63 |
| Peak Flow Rate (cfs) | - |
| Rim Elevation | 244.50' |
| Top of Vault Elevation | 240.06' |

| Pipe Data | Pipe Size | Pipe Type | Invert Elevation |
|---|---|---|---|
| Inlet | 18" | RCP | 232.56' |
| Outlet | 18" | RCP | 232.39' |

Notes:

| PERFORMANCE SPECIFICATIONS | |
|---|---|
| Screen System Storage Volume | 25.66 cf |
| Total Sump Volume | 88.00 cf |
| NJDEP Sediment Storage Volume | 30.00 cf |
| Peak Flow Capacity* | 26.20 cfs |
| Treatment Flow Capacities:* | |
| NJDEP 50% Removal, 75 micron | 2.49 cfs |
| 80% Removal, 150 micron | 4.60 cfs |

*Contact Oldcastle for additional treatment and peak flow capacities.

**ALL PIPE ANGLES TO BE IMMEDIATELY OUTSIDE OF THE STRUCTURE, BY OTHERS.**

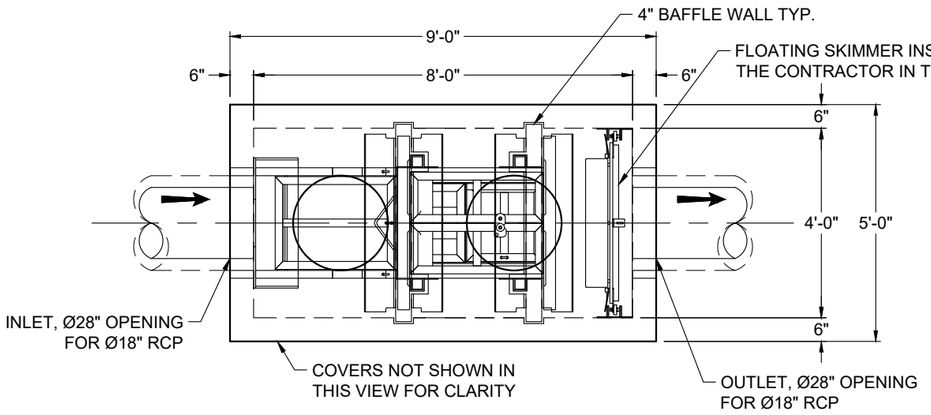


PLAN VIEW

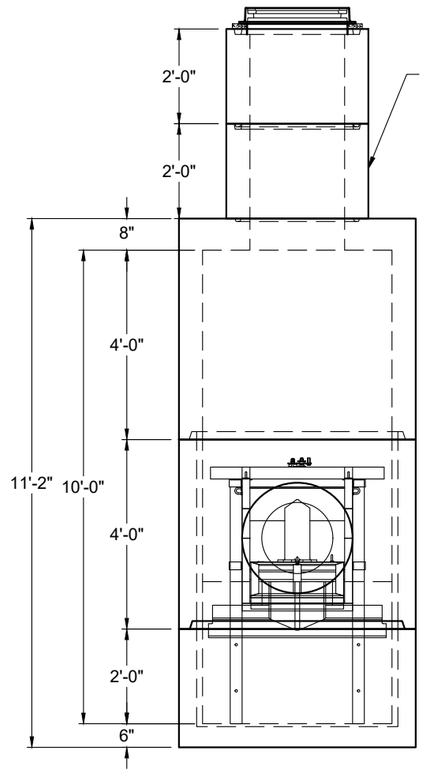


LEFT END VIEW

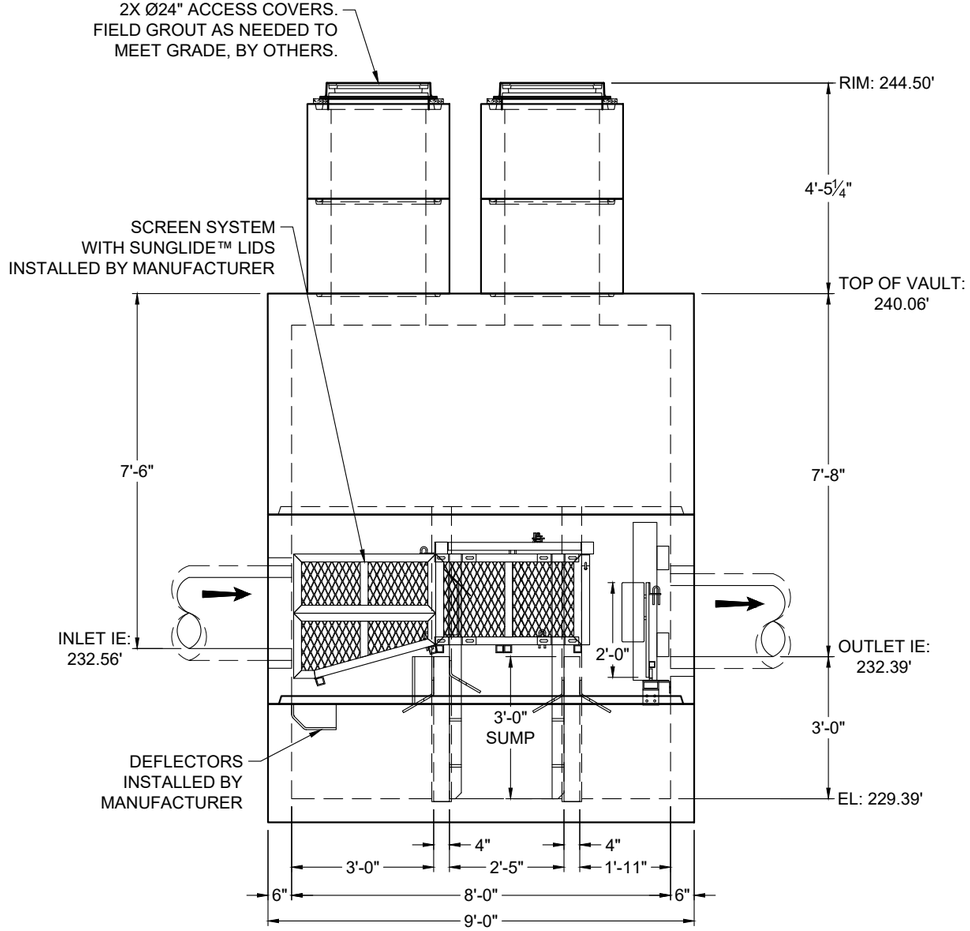


ELEVATION VIEW

NOTES:

1. DESIGN LOADINGS:
   A. AASHTO HS-20-44 (WITH IMPACT)
   B. DESIGN SOIL COVER: 5'-0" MAXIMUM
   C. ASSUMED WATER TABLE: BELOW BASE OF PRECAST (ENGINEER-OF-RECORD TO CONFIRM SITE WATER TABLE ELEVATION)
   D. LATERAL EARTH PRESSURE: 45 PCF (DRAINED)
   E. LATERAL LIVE LOAD SURCHARGE: 80 PSF (APPLIED TO 8'-0" BELOW GRADE)
   F. NO LATERAL SURCHARGE FROM ADJACENT BUILDINGS, WALLS, PIERS, OR FOUNDATIONS.
2. CONCRETE 28-DAY MINIMUM COMPRESSIVE STRENGTH: 5,000 PSI MINIMUM.
3. REINFORCING: REBAR, ASTM A615/A706, GRADE 60
4. CEMENT: ASTM C150
5. REQ'D ALLOWABLE SOIL BEARING CAPACITY: 2,500 PSF
6. REFERENCE STANDARD:
   A. ASTM C890
   B. ASTM C913
   C. ACI 318-14
7. THIS STRUCTURE IS DESIGNED TO THE PARAMETERS NOTED HEREIN. ENGINEER-OF-RECORD SHALL VERIFY THAT NOTED PARAMETERS MEET OR EXCEED PROJECT REQUIREMENTS. IF DESIGN PARAMETERS ARE INCORRECT, REVIEWING ENGINEER/AUTHORITY SHALL NOTIFY OLDCASTLE INFRASTRUCTURE UPON REVIEW OF THIS SUBMITTAL.
8. OVERSIZED HOLES TO ACCOMMODATE SPECIFIC PIPE TYPE MUST BE CONCENTRIC TO PIPE ID. AFTER PIPES ARE INSTALLED, ALL ANNULAR SPACES SHALL BE FILLED WITH A MINIMUM OF 3,000 PSI CONCRETE FOR FULL THICKNESS OF PRECAST WALLS. PIPES ARE TO BE FLUSH WITH THE INSIDE SURFACE OF THE CONCRETE STRUCTURE.
9. CONTRACTOR RESPONSIBLE TO VERIFY ALL SIZES, LOCATIONS, AND ELEVATIONS OF OPENINGS.
10. CONTRACTOR RESPONSIBLE TO ENSURE ADEQUATE BEARING SURFACE IS PROVIDED (I.E. COMPACTED AND LEVEL PER PROJECT SPECIFICATIONS).
11. SECTION HEIGHTS, SLAB/WALL THICKNESSES, AND KEYWAYS ARE SUBJECT TO CHANGE AS REQUIRED FOR SITE REQUIREMENTS AND/OR DUE TO PRODUCT AVAILABILITY AND PRODUCTION FACILITY CONSTRAINTS.
12. FOR SITE SPECIFIC DRAWINGS WITH DETAILED STRUCTURE DIMENSIONS AND WEIGHTS, PLEASE CONTACT OLDCASTLE INFRASTRUCTURE.
13. MAXIMUM PICK WEIGHT: 10,500 LBS. (* COMBINED WEIGHT INCLUDES BAFFLE WALLS AND PRODUCT INTERNALS.)
14. INTERNALS SHALL CONSIST OF A FLOATING SKIMMER, FLOW DEFLECTORS, ELEVATED CENTRAL SCREEN SYSTEM AND SLIDING LIDS. THESE COMPONENTS EFFECTIVELY REDUCE HEAD LOSS, INCREASE POLLUTANT REMOVAL AND SIMPLIFY MAINTENANCE.

- PRELIMINARY -
NOT FOR CONSTRUCTION

| REV | DESCRIPTION | BY | DATE |
|---|---|---|---|
| | | | |

THIS PRODUCT IS PROTECTED BY ONE OR MORE OF THE FOLLOWING US PATENT(S): 6,428,692; 7,270,747; 7,981,283; 8,142,666; 8,366,923; 8,491,797; 7,846,327; 8,034,236; RELATED FOREIGN PATENTS, OR OTHER PATENTS PENDING.

Oldcastle Infrastructure™
A CRH COMPANY
Ph: 800.579.8819 | www.oldcastleinfrastructure.com/stormwater

THIS DOCUMENT IS THE PROPERTY OF OLDCASTLE INFRASTRUCTURE, INC. IT IS CONFIDENTIAL, SUBMITTED FOR REFERENCE PURPOSES ONLY AND SHALL NOT BE USED IN ANY WAY INJURIOUS TO THE INTERESTS OF, OR WITHOUT THE WRITTEN PERMISSION OF OLDCASTLE INFRASTRUCTURE, INC. COPYRIGHT © 2024 OLDCASTLE INFRASTRUCTURE, INC. ALL RIGHTS RESERVED.

Nutrient Separating Baffle Box®
NSBB-48

CUSTOMER
-

PROJECT NAME
Ocean Breeze Ranch (OBR) - Bonsall, CA

| DATE | MFG | DRAWN | ENGINEER | CHECKED | SALES ORDER |
|---|---|---|---|---|---|
| 10/1/24 | 070-FO | PPS | HMF | HMF | - |

| SHEET NAME | REVISION 1 | SHEET |
|---|---|---|
| 21-603205-NSBB-48_Basin 1A-2 | REV DATE 10/28/24 | 1 OF 1 |

21-603205-NSBB-48_Basin 1A-2.dwg, 2024-10-28 4:35 PM Akshata Savant 47 3829

| SITE SPECIFIC DATA | | | |
|---|---|---|---|
| Structure ID | | | Basin 1A-3 |
| Water Quality Flow Rate (cfs) | | | 0.90 |
| Peak Flow Rate (cfs) | | | - |
| Rim Elevation | | | 236.20' |
| Top of Vault Elevation | | | 234.38' |
| **Pipe Data** | **Pipe Size** | **Pipe Type** | **Invert Elevation** |
| Inlet | 42" | RCP | 229.05' |
| Outlet | 42" | RCP | 228.88' |
| Notes: | | | |

| PERFORMANCE SPECIFICATIONS | |
|---|---|
| Screen System Storage Volume | 126.49 cf |
| Total Sump Volume | 750.00 cf |
| NJDEP Sediment Storage Volume | 122.60 cf |
| Peak Flow Capacity* | 102.70 cfs |
| Treatment Flow Capacities:* | |
| NJDEP 50% Removal, 75 micron | 9.96 cfs |
| 80% Removal, 150 micron | 26.00 cfs |
| *Contact Oldcastle for additional treatment and peak flow capacities. | |

**ALL PIPE ANGLES TO BE IMMEDIATELY OUTSIDE OF THE STRUCTURE, BY OTHERS.**

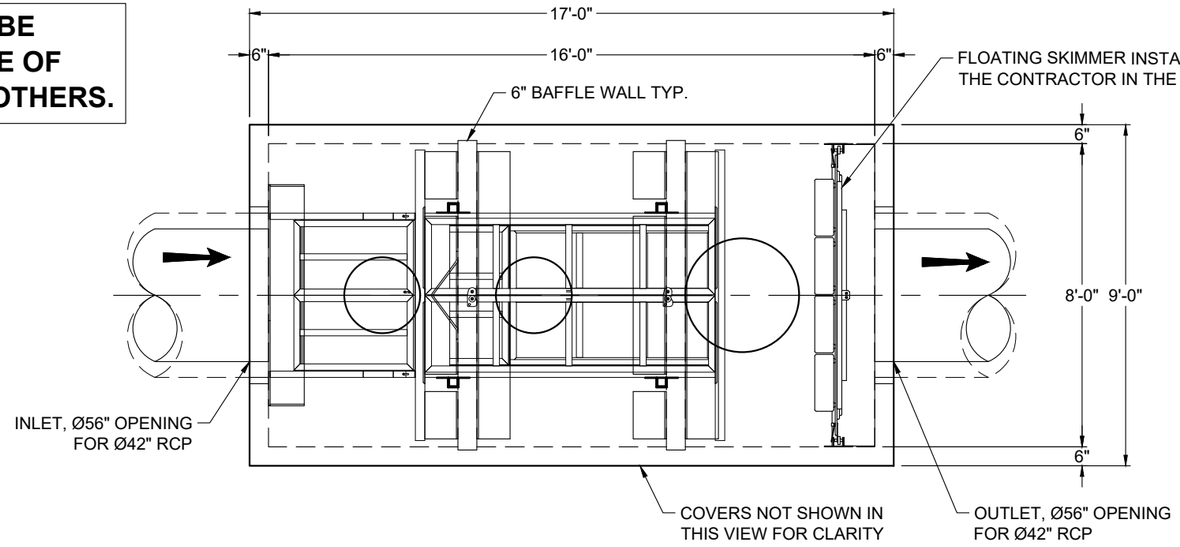


PLAN VIEW

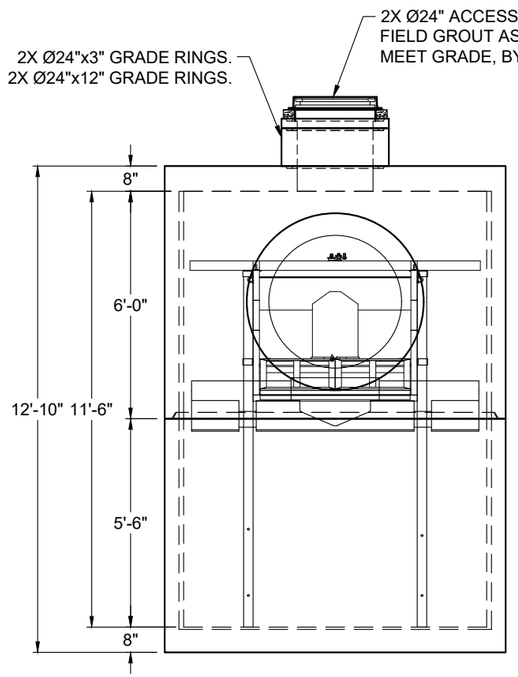


LEFT END VIEW

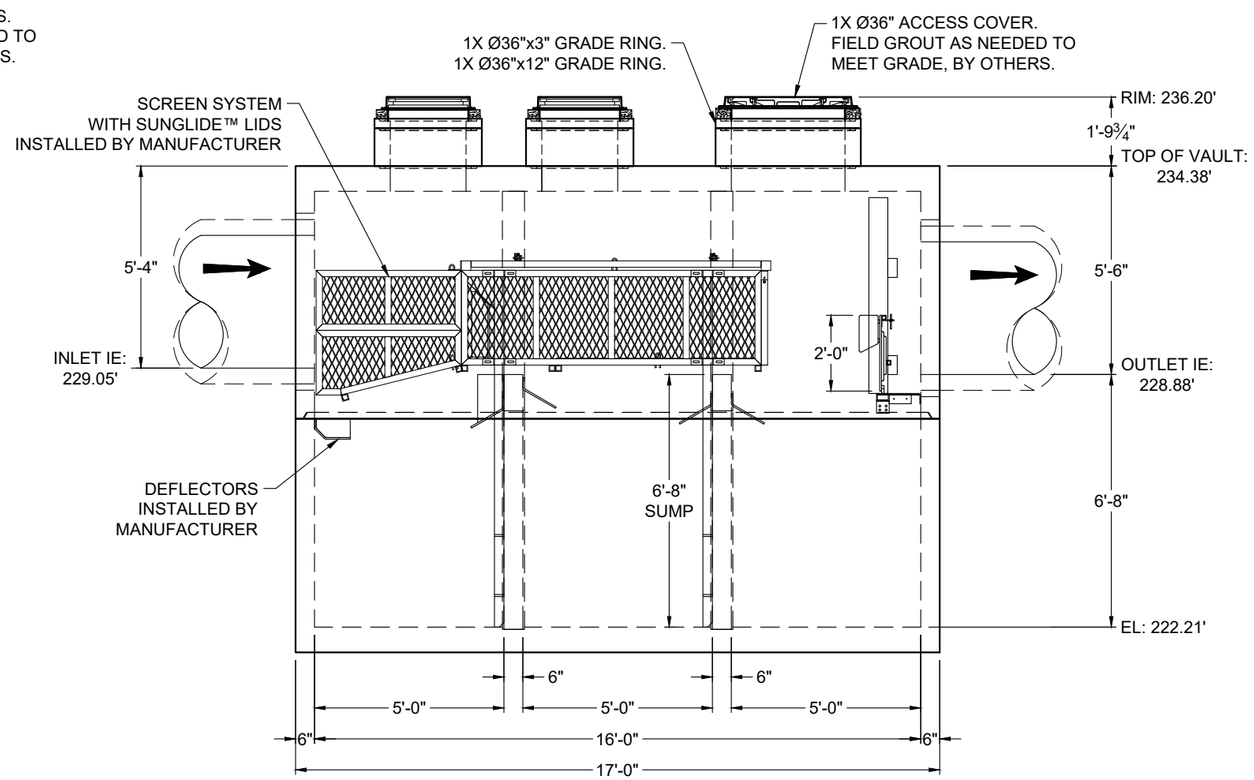


ELEVATION VIEW

THIS PRODUCT IS PROTECTED BY ONE OR MORE OF THE FOLLOWING US PATENT(S): 6,428,692; 7,270,747; 7,981,283; 8,142,666; 8,366,923; 8,491,797; 7,846,327; 8,034,236; RELATED FOREIGN PATENTS, OR OTHER PATENTS PENDING.

NOTES:

1. DESIGN LOADINGS:
   A. AASHTO HS-20-44 (WITH IMPACT)
   B. DESIGN SOIL COVER: 5'-0" MAXIMUM
   C. ASSUMED WATER TABLE: BELOW BASE OF PRECAST (ENGINEER-OF-RECORD TO CONFIRM SITE WATER TABLE ELEVATION)
   D. LATERAL EARTH PRESSURE: 45 PCF (DRAINED)
   E. LATERAL LIVE LOAD SURCHARGE: 80 PSF (APPLIED TO 8'-0" BELOW GRADE)
   F. NO LATERAL SURCHARGE FROM ADJACENT BUILDINGS, WALLS, PIERS, OR FOUNDATIONS.
2. CONCRETE 28-DAY MINIMUM COMPRESSIVE STRENGTH: 5,000 PSI MINIMUM.
3. REINFORCING: REBAR, ASTM A615/A706, GRADE 60
4. CEMENT: ASTM C150
5. REQ'D ALLOWABLE SOIL BEARING CAPACITY: 2,500 PSF
6. REFERENCE STANDARD:
   A. ASTM C890
   B. ASTM C913
   C. ACI 318-14
7. THIS STRUCTURE IS DESIGNED TO THE PARAMETERS NOTED HEREIN. ENGINEER-OF-RECORD SHALL VERIFY THAT NOTED PARAMETERS MEET OR EXCEED PROJECT REQUIREMENTS. IF DESIGN PARAMETERS ARE INCORRECT, REVIEWING ENGINEER/AUTHORITY SHALL NOTIFY OLDCASTLE INFRASTRUCTURE UPON REVIEW OF THIS SUBMITTAL.
8. OVERSIZED HOLES TO ACCOMMODATE SPECIFIC PIPE TYPE MUST BE CONCENTRIC TO PIPE ID. AFTER PIPES ARE INSTALLED, ALL ANNULAR SPACES SHALL BE FILLED WITH A MINIMUM OF 3,000 PSI CONCRETE FOR FULL THICKNESS OF PRECAST WALLS. PIPES ARE TO BE FLUSH WITH THE INSIDE SURFACE OF THE CONCRETE STRUCTURE.
9. CONTRACTOR RESPONSIBLE TO VERIFY ALL SIZES, LOCATIONS, AND ELEVATIONS OF OPENINGS.
10. CONTRACTOR RESPONSIBLE TO ENSURE ADEQUATE BEARING SURFACE IS PROVIDED (I.E. COMPACTED AND LEVEL PER PROJECT SPECIFICATIONS).
11. SECTION HEIGHTS, SLAB/WALL THICKNESSES, AND KEYWAYS ARE SUBJECT TO CHANGE AS REQUIRED FOR SITE REQUIREMENTS AND/OR DUE TO PRODUCT AVAILABILITY AND PRODUCTION FACILITY CONSTRAINTS.
12. FOR SITE SPECIFIC DRAWINGS WITH DETAILED STRUCTURE DIMENSIONS AND WEIGHTS, PLEASE CONTACT OLDCASTLE INFRASTRUCTURE.
13. MAXIMUM PICK WEIGHT: 45,500 LBS. (* COMBINED WEIGHT INCLUDES BAFFLE WALLS AND PRODUCT INTERNALS.)
14. INTERNALS SHALL CONSIST OF A FLOATING SKIMMER, FLOW DEFLECTORS, ELEVATED CENTRAL SCREEN SYSTEM AND SLIDING LIDS. THESE COMPONENTS EFFECTIVELY REDUCE HEAD LOSS, INCREASE POLLUTANT REMOVAL AND SIMPLIFY MAINTENANCE.

- PRELIMINARY -
NOT FOR CONSTRUCTION

Oldcastle Infrastructure™
A CRH COMPANY

Ph: 800.579.8819 | www.oldcastleinfrastructure.com/stormwater

THIS DOCUMENT IS THE PROPERTY OF OLDCASTLE INFRASTRUCTURE, INC. IT IS CONFIDENTIAL, SUBMITTED FOR REFERENCE PURPOSES ONLY AND SHALL NOT BE USED IN ANY WAY INJURIOUS TO THE INTERESTS OF, OR WITHOUT THE WRITTEN PERMISSION OF OLDCASTLE INFRASTRUCTURE, INC. COPYRIGHT © 2024 OLDCASTLE INFRASTRUCTURE, INC. ALL RIGHTS RESERVED.

Nutrient Separating Baffle Box®
NSBB-816

CUSTOMER
-

PROJECT NAME
Ocean Breeze Ranch (OBR) - Bonsall, CA

| DATE | MFG | DRAWN | ENGINEER | CHECKED | SALES ORDER |
|---|---|---|---|---|---|
| 8/1/24 | 070-FO | PPS | HMF | HMF | - |

| SHEET NAME | REVISION | SHEET |
|---|---|---|
| 21-603205-NSBB-816_Basin 1A-3 | 2<br>REV DATE 10/28/24 | 1 OF 1 |

21-603205-NSBB-816_Basin 1A-3.dwg, 2024-10-28 4:56 PM,Akansha Savant 38.3818

| SITE SPECIFIC DATA | |
|---|---|
| Structure ID | Basin 1B-1 |
| Water Quality Flow Rate (cfs) | 0.52 |
| Peak Flow Rate (cfs) | 13.50 |
| Rim Elevation | 311.04' |
| Top of Vault Elevation | 306.93' |

| Pipe Data | Pipe Size | Pipe Type | Invert Elevation |
|---|---|---|---|
| Inlet | 24" | RCP | 303.36' |
| Outlet | 24" | RCP | 303.26' |

Notes:

| PERFORMANCE SPECIFICATIONS | |
|---|---|
| Screen System Storage Volume | 25.66 cf |
| Total Sump Volume | 88.00 cf |
| NJDEP Sediment Storage Volume | 30.00 cf |
| Peak Flow Capacity* | 26.20 cfs |
| Treatment Flow Capacities:* | |
| NJDEP 50% Removal, 75 micron | 2.49 cfs |
| 80% Removal, 150 micron | 4.60 cfs |

*Contact Oldcastle for additional treatment and peak flow capacities.

**ALL PIPE ANGLES TO BE IMMEDIATELY OUTSIDE OF THE STRUCTURE, BY OTHERS.**

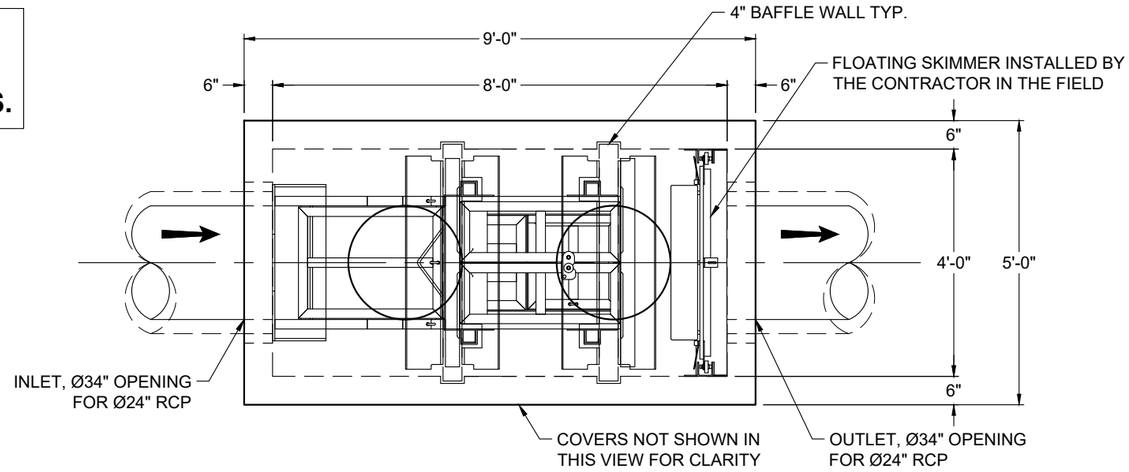


PLAN VIEW

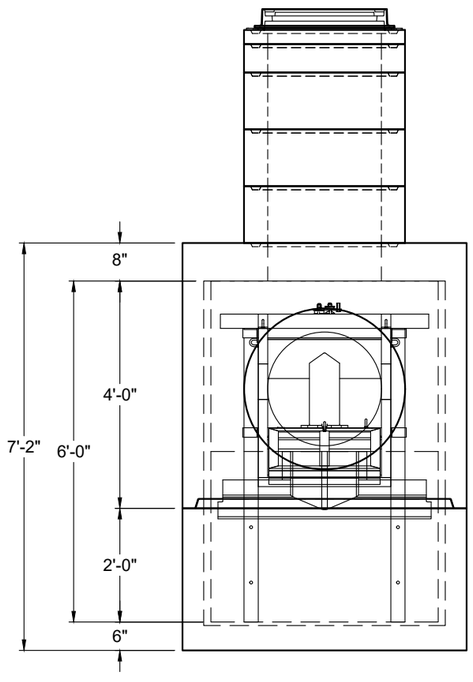


LEFT END VIEW

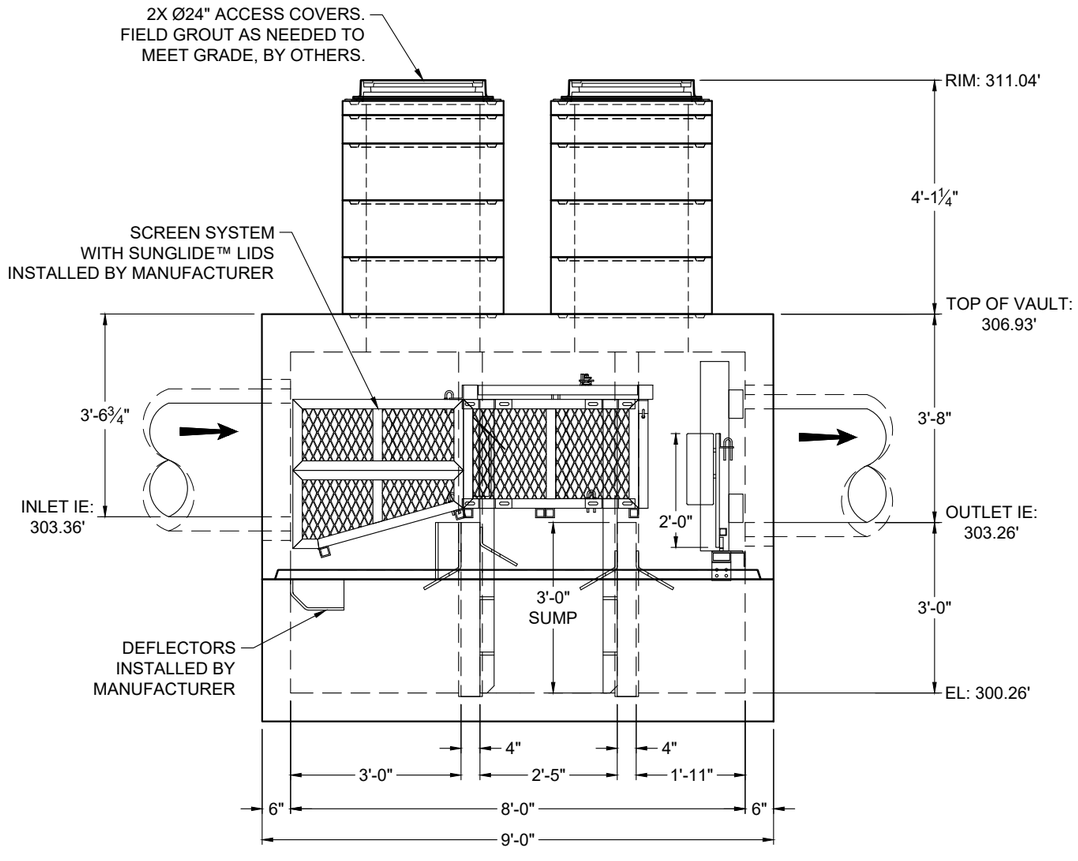


ELEVATION VIEW

NOTES:

1. DESIGN LOADINGS:
   A. AASHTO HS-20-44 (WITH IMPACT)
   B. DESIGN SOIL COVER: 5'-0" MAXIMUM
   C. ASSUMED WATER TABLE: BELOW BASE OF PRECAST (ENGINEER-OF-RECORD TO CONFIRM SITE WATER TABLE ELEVATION)
   D. LATERAL EARTH PRESSURE: 45 PCF (DRAINED)
   E. LATERAL LIVE LOAD SURCHARGE: 80 PSF (APPLIED TO 8'-0" BELOW GRADE)
   F. NO LATERAL SURCHARGE FROM ADJACENT BUILDINGS, WALLS, PIERS, OR FOUNDATIONS.
2. CONCRETE 28-DAY MINIMUM COMPRESSIVE STRENGTH: 5,000 PSI MINIMUM.
3. REINFORCING: REBAR, ASTM A615/A706, GRADE 60
4. CEMENT: ASTM C150
5. REQ'D ALLOWABLE SOIL BEARING CAPACITY: 2,500 PSF
6. REFERENCE STANDARD:
   A. ASTM C890
   B. ASTM C913
   C. ACI 318-14
7. THIS STRUCTURE IS DESIGNED TO THE PARAMETERS NOTED HEREIN. ENGINEER-OF-RECORD SHALL VERIFY THAT NOTED PARAMETERS MEET OR EXCEED PROJECT REQUIREMENTS. IF DESIGN PARAMETERS ARE INCORRECT, REVIEWING ENGINEER/AUTHORITY SHALL NOTIFY OLDCASTLE INFRASTRUCTURE UPON REVIEW OF THIS SUBMITTAL.
8. OVERSIZED HOLES TO ACCOMMODATE SPECIFIC PIPE TYPE MUST BE CONCENTRIC TO PIPE ID. AFTER PIPES ARE INSTALLED, ALL ANNULAR SPACES SHALL BE FILLED WITH A MINIMUM OF 3,000 PSI CONCRETE FOR FULL THICKNESS OF PRECAST WALLS. PIPES ARE TO BE FLUSH WITH THE INSIDE SURFACE OF THE CONCRETE STRUCTURE.
9. CONTRACTOR RESPONSIBLE TO VERIFY ALL SIZES, LOCATIONS, AND ELEVATIONS OF OPENINGS.
10. CONTRACTOR RESPONSIBLE TO ENSURE ADEQUATE BEARING SURFACE IS PROVIDED (I.E. COMPACTED AND LEVEL PER PROJECT SPECIFICATIONS).
11. SECTION HEIGHTS, SLAB/WALL THICKNESSES, AND KEYWAYS ARE SUBJECT TO CHANGE AS REQUIRED FOR SITE REQUIREMENTS AND/OR DUE TO PRODUCT AVAILABILITY AND PRODUCTION FACILITY CONSTRAINTS.
12. FOR SITE SPECIFIC DRAWINGS WITH DETAILED STRUCTURE DIMENSIONS AND WEIGHTS, PLEASE CONTACT OLDCASTLE INFRASTRUCTURE.
13. MAXIMUM PICK WEIGHT: 10,500 LBS. (* COMBINED WEIGHT INCLUDES BAFFLE WALLS AND PRODUCT INTERNALS.)
14. INTERNALS SHALL CONSIST OF A FLOATING SKIMMER, FLOW DEFLECTORS, ELEVATED CENTRAL SCREEN SYSTEM AND SLIDING LIDS. THESE COMPONENTS EFFECTIVELY REDUCE HEAD LOSS, INCREASE POLLUTANT REMOVAL AND SIMPLIFY MAINTENANCE.

- PRELIMINARY -
NOT FOR CONSTRUCTION


Oldcastle Infrastructure™ A CRH COMPANY
Ph: 800.579.8819 | www.oldcastleinfrastructure.com/stormwater



THIS DOCUMENT IS THE PROPERTY OF OLDCASTLE INFRASTRUCTURE, INC. IT IS CONFIDENTIAL, SUBMITTED FOR REFERENCE PURPOSES ONLY AND SHALL NOT BE USED IN ANY WAY INJURIOUS TO THE INTERESTS OF, OR WITHOUT THE WRITTEN PERMISSION OF OLDCASTLE INFRASTRUCTURE, INC. COPYRIGHT © 2024 OLDCASTLE INFRASTRUCTURE, INC. ALL RIGHTS RESERVED.


Nutrient Separating Baffle Box®
NSBB-48

CUSTOMER: Bowman

PROJECT NAME: Ocean Breeze Ranch (OBR) - Bonsall, CA

| DATE | MFG | DRAWN | ENGINEER | CHECKED | SALES ORDER |
|---|---|---|---|---|---|
| 6/6/24 | 070-FO | PPS | HMF | HMF | - |

| SHEET NAME | REVISION / REV DATE | SHEET |
|---|---|---|
| 21-603205-NSBB-48_Basin 1B-1 | 1 / 10/28/24 | 1 OF 1 |

THIS PRODUCT IS PROTECTED BY ONE OR MORE OF THE FOLLOWING US PATENT(S): 6,428,692; 7,270,747; 7,981,283; 8,142,666; 8,366,923; 8,491,797; 7,846,327; 8,034,236; RELATED FOREIGN PATENTS, OR OTHER PATENTS PENDING.


21-603205-NSBB-48_Basin 1B-1.dwg, 2024-10-28 4:45 PM, Akshath Sawant,46.0509

| SITE SPECIFIC DATA | |
|---|---|
| Structure ID | Basin 2A-1 |
| Water Quality Flow Rate (cfs) | 1.30 |
| Peak Flow Rate (cfs) | 42.20 |
| Rim Elevation | 194.50' |
| Top of Vault Elevation | 192.44' |

| Pipe Data | Pipe Size | Pipe Type | Invert Elevation |
|---|---|---|---|
| Inlet | 42" | RCP | 186.95' |
| Outlet | 42" | RCP | 186.94' |

Notes:

| PERFORMANCE SPECIFICATIONS | |
|---|---|
| Screen System Storage Volume | 126.49 cf |
| Total Sump Volume | 750.00 cf |
| NJDEP Sediment Storage Volume | 122.60 cf |
| Peak Flow Capacity* | 102.70 cfs |
| Treatment Flow Capacities:* | |
| NJDEP 50% Removal, 75 micron | 9.96 cfs |
| 80% Removal, 150 micron | 26.00 cfs |

*Contact Oldcastle for additional treatment and peak flow capacities.

**ALL PIPE ANGLES TO BE IMMEDIATELY OUTSIDE OF THE STRUCTURE, BY OTHERS.**

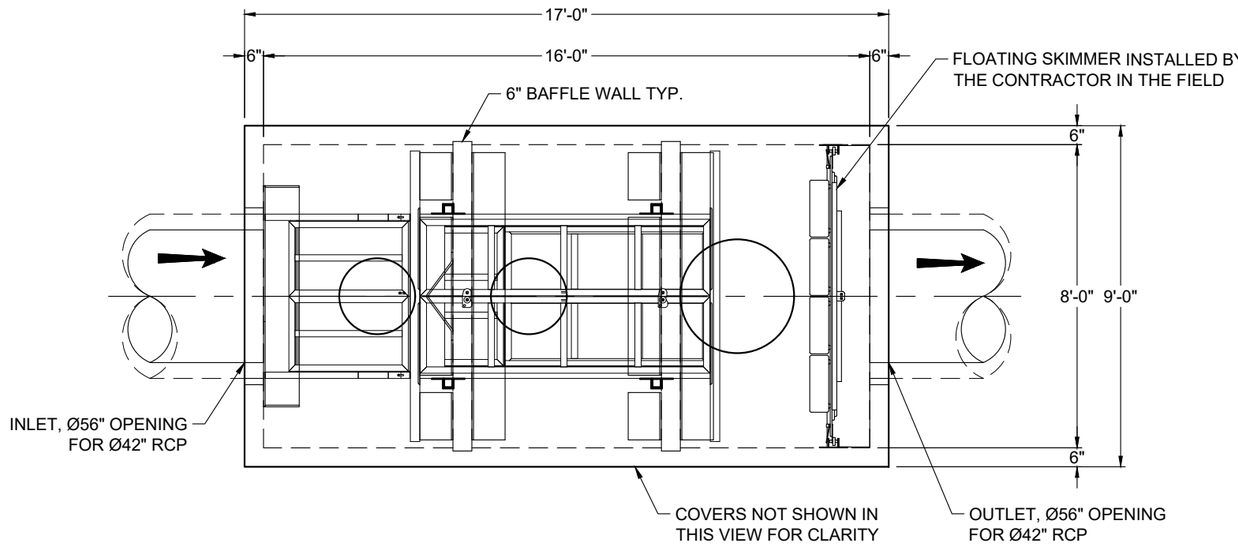


PLAN VIEW

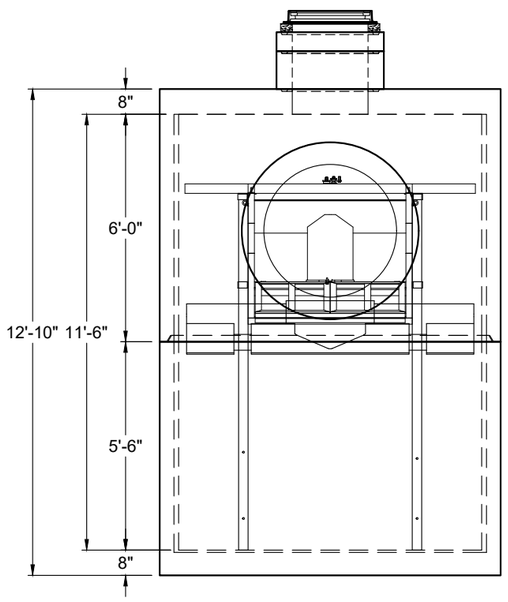


LEFT END VIEW

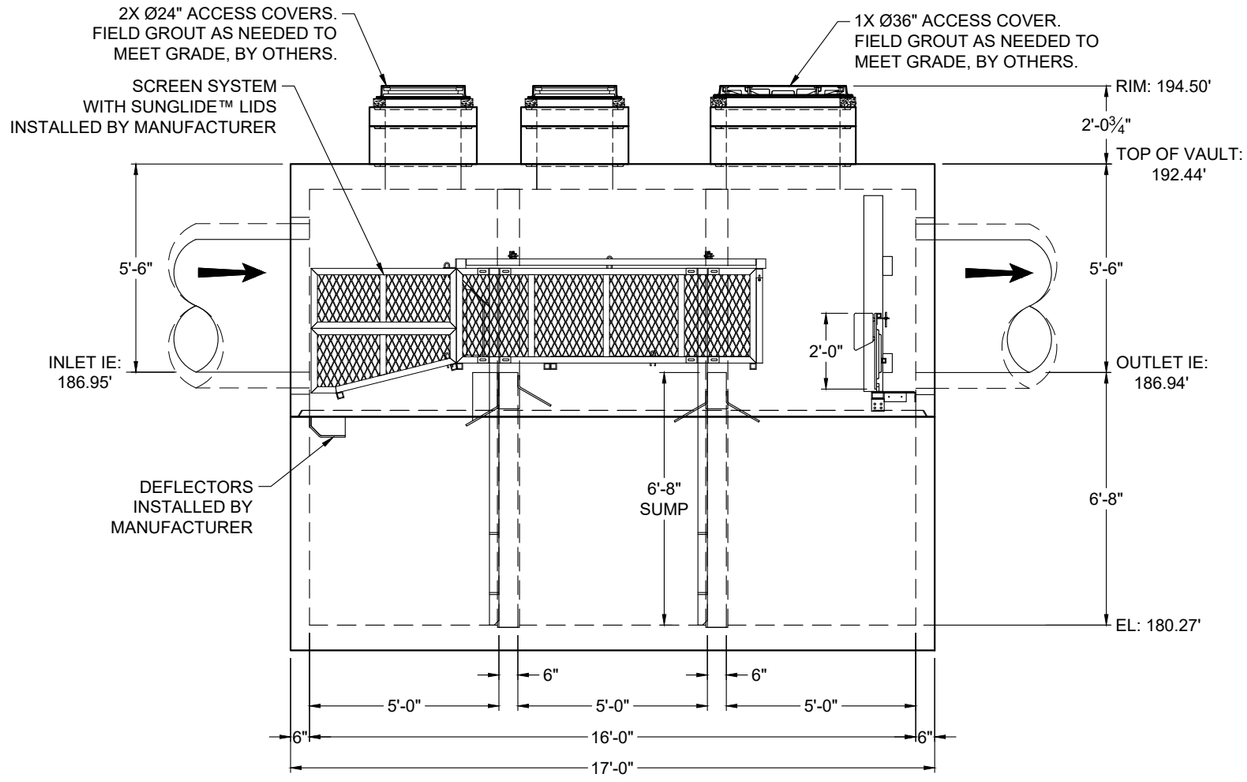


ELEVATION VIEW

NOTES:

1. DESIGN LOADINGS:
   A. AASHTO HS-20-44 (WITH IMPACT)
   B. DESIGN SOIL COVER: 5'-0" MAXIMUM
   C. ASSUMED WATER TABLE: BELOW BASE OF PRECAST (ENGINEER-OF-RECORD TO CONFIRM SITE WATER TABLE ELEVATION)
   D. LATERAL EARTH PRESSURE: 45 PCF (DRAINED)
   E. LATERAL LIVE LOAD SURCHARGE: 80 PSF (APPLIED TO 8'-0" BELOW GRADE)
   F. NO LATERAL SURCHARGE FROM ADJACENT BUILDINGS, WALLS, PIERS, OR FOUNDATIONS.
2. CONCRETE 28-DAY MINIMUM COMPRESSIVE STRENGTH: 5,000 PSI MINIMUM.
3. REINFORCING: REBAR, ASTM A615/A706, GRADE 60
4. CEMENT: ASTM C150
5. REQ'D ALLOWABLE SOIL BEARING CAPACITY: 2,500 PSF
6. REFERENCE STANDARD:
   A. ASTM C890
   B. ASTM C913
   C. ACI 318-14
7. THIS STRUCTURE IS DESIGNED TO THE PARAMETERS NOTED HEREIN. ENGINEER-OF-RECORD SHALL VERIFY THAT NOTED PARAMETERS MEET OR EXCEED PROJECT REQUIREMENTS. IF DESIGN PARAMETERS ARE INCORRECT, REVIEWING ENGINEER/AUTHORITY SHALL NOTIFY OLDCASTLE INFRASTRUCTURE UPON REVIEW OF THIS SUBMITTAL.
8. OVERSIZED HOLES TO ACCOMMODATE SPECIFIC PIPE TYPE MUST BE CONCENTRIC TO PIPE ID. AFTER PIPES ARE INSTALLED, ALL ANNULAR SPACES SHALL BE FILLED WITH A MINIMUM OF 3,000 PSI CONCRETE FOR FULL THICKNESS OF PRECAST WALLS. PIPES ARE TO BE FLUSH WITH THE INSIDE SURFACE OF THE CONCRETE STRUCTURE.
9. CONTRACTOR RESPONSIBLE TO VERIFY ALL SIZES, LOCATIONS, AND ELEVATIONS OF OPENINGS.
10. CONTRACTOR RESPONSIBLE TO ENSURE ADEQUATE BEARING SURFACE IS PROVIDED (I.E. COMPACTED AND LEVEL PER PROJECT SPECIFICATIONS).
11. SECTION HEIGHTS, SLAB/WALL THICKNESSES, AND KEYWAYS ARE SUBJECT TO CHANGE AS REQUIRED FOR SITE REQUIREMENTS AND/OR DUE TO PRODUCT AVAILABILITY AND PRODUCTION FACILITY CONSTRAINTS.
12. FOR SITE SPECIFIC DRAWINGS WITH DETAILED STRUCTURE DIMENSIONS AND WEIGHTS, PLEASE CONTACT OLDCASTLE INFRASTRUCTURE.
13. MAXIMUM PICK WEIGHT: 45,600 LBS. (* COMBINED WEIGHT INCLUDES BAFFLE WALLS AND PRODUCT INTERNALS.)
14. INTERNALS SHALL CONSIST OF A FLOATING SKIMMER, FLOW DEFLECTORS, ELEVATED CENTRAL SCREEN SYSTEM AND SLIDING LIDS. THESE COMPONENTS EFFECTIVELY REDUCE HEAD LOSS, INCREASE POLLUTANT REMOVAL AND SIMPLIFY MAINTENANCE.

- PRELIMINARY -
NOT FOR CONSTRUCTION

THIS PRODUCT IS PROTECTED BY ONE OR MORE OF THE FOLLOWING US PATENT(S): 6,428,692; 7,270,747; 7,981,283; 8,142,666; 8,366,923; 8,491,797; 7,846,327; 8,034,236; RELATED FOREIGN PATENTS, OR OTHER PATENTS PENDING.

Oldcastle Infrastructure™
A CRH COMPANY
Ph: 800.579.8819 | www.oldcastleinfrastructure.com/stormwater

THIS DOCUMENT IS THE PROPERTY OF OLDCASTLE INFRASTRUCTURE, INC. IT IS CONFIDENTIAL, SUBMITTED FOR REFERENCE PURPOSES ONLY AND SHALL NOT BE USED IN ANY WAY INJURIOUS TO THE INTERESTS OF, OR WITHOUT THE WRITTEN PERMISSION OF OLDCASTLE INFRASTRUCTURE, INC. COPYRIGHT © 2024 OLDCASTLE INFRASTRUCTURE, INC. ALL RIGHTS RESERVED.

Nutrient Separating Baffle Box®
NSBB-816

CUSTOMER
Bowman

PROJECT NAME
Ocean Breeze Ranch (OBR) - Bonsall, CA

| DATE | MFG | DRAWN | ENGINEER | CHECKED | SALES ORDER |
|---|---|---|---|---|---|
| 6/6/24 | 070-FO | PPS | HMF | HMF | - |

| SHEET NAME | REVISION | SHEET |
|---|---|---|
| 21-603205-NSBB-816_Basin 2A-1 | 1<br>REV DATE 10/28/24 | 1 OF 1 |

21-603205-NSBB-816_Basin 2A-1.dwg, 2024-10-28 4:57 PM,Akshata Savant 37.6134

| SITE SPECIFIC DATA | |
|---|---|
| Structure ID | Basin 2A-2 |
| Water Quality Flow Rate (cfs) | 0.79 |
| Peak Flow Rate (cfs) | 26.30 |
| Rim Elevation | 194.48' |
| Top of Vault Elevation | 192.17' |

| Pipe Data | Pipe Size | Pipe Type | Invert Elevation |
|---|---|---|---|
| Inlet | 30" | HDPE | 187.58' |
| Outlet | 30" | RCP | 187.50' |

Notes:

| PERFORMANCE SPECIFICATIONS | |
|---|---|
| Screen System Storage Volume | 55.63 cf |
| Total Sump Volume | 328.67 cf |
| NJDEP Sediment Storage Volume | 68.60 cf |
| Peak Flow Capacity* | 62.00 cfs |
| Treatment Flow Capacities:* | |
| NJDEP **50% Removal, 75 micron** | 5.60 cfs |
| 80% Removal, 150 micron | 12.70 cfs |

*Contact Oldcastle for additional treatment and peak flow capacities.

**ALL PIPE ANGLES TO BE IMMEDIATELY OUTSIDE OF THE STRUCTURE, BY OTHERS.**

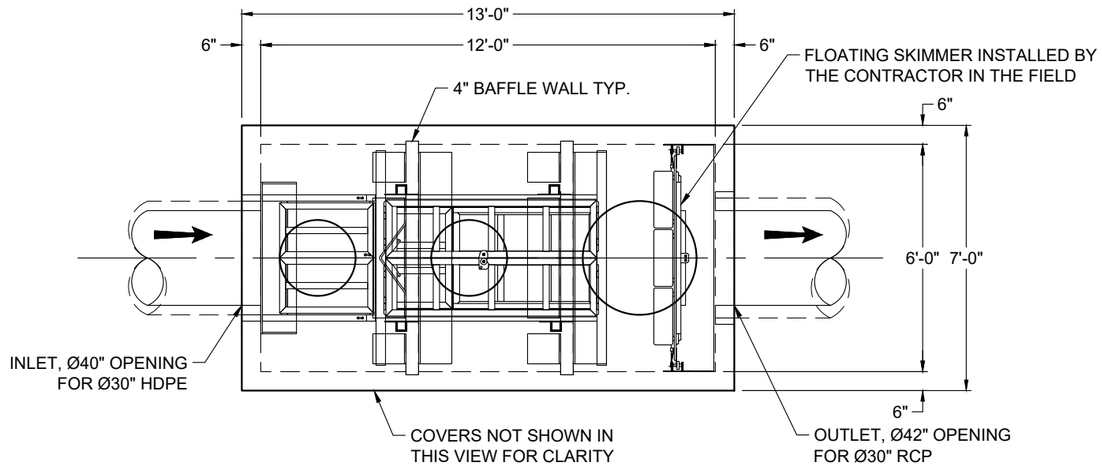


PLAN VIEW

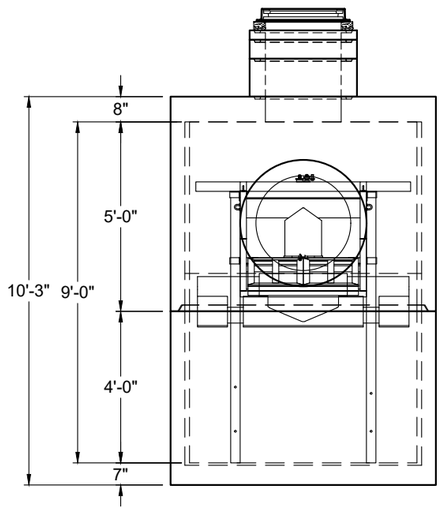


LEFT END VIEW

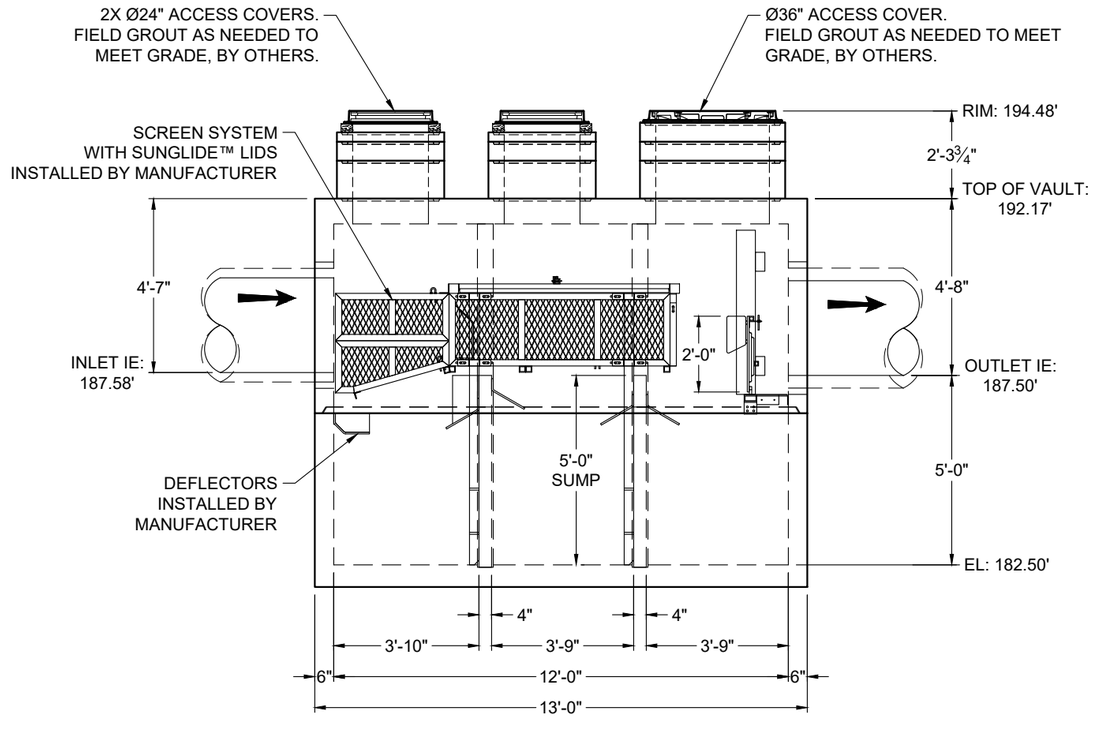


ELEVATION VIEW

NOTES:

1. DESIGN LOADINGS:
   A. AASHTO HS-20-44 (WITH IMPACT)
   B. DESIGN SOIL COVER: 5'-0" MAXIMUM
   C. ASSUMED WATER TABLE: BELOW BASE OF PRECAST (ENGINEER-OF-RECORD TO CONFIRM SITE WATER TABLE ELEVATION)
   D. LATERAL EARTH PRESSURE: 45 PCF (DRAINED)
   E. LATERAL LIVE LOAD SURCHARGE: 80 PSF (APPLIED TO 8'-0" BELOW GRADE)
   F. NO LATERAL SURCHARGE FROM ADJACENT BUILDINGS, WALLS, PIERS, OR FOUNDATIONS.
2. CONCRETE 28-DAY MINIMUM COMPRESSIVE STRENGTH: 5,000 PSI MINIMUM.
3. REINFORCING: REBAR, ASTM A615/A706, GRADE 60
4. CEMENT: ASTM C150
5. REQ'D ALLOWABLE SOIL BEARING CAPACITY: 2,500 PSF
6. REFERENCE STANDARD:
   A. ASTM C890
   B. ASTM C913
   C. ACI 318-14
7. THIS STRUCTURE IS DESIGNED TO THE PARAMETERS NOTED HEREIN. ENGINEER-OF-RECORD SHALL VERIFY THAT NOTED PARAMETERS MEET OR EXCEED PROJECT REQUIREMENTS. IF DESIGN PARAMETERS ARE INCORRECT, REVIEWING ENGINEER/AUTHORITY SHALL NOTIFY OLDCASTLE INFRASTRUCTURE UPON REVIEW OF THIS SUBMITTAL.
8. OVERSIZED HOLES TO ACCOMMODATE SPECIFIC PIPE TYPE MUST BE CONCENTRIC TO PIPE ID. AFTER PIPES ARE INSTALLED, ALL ANNULAR SPACES SHALL BE FILLED WITH A MINIMUM OF 3,000 PSI CONCRETE FOR FULL THICKNESS OF PRECAST WALLS. PIPES ARE TO BE FLUSH WITH THE INSIDE SURFACE OF THE CONCRETE STRUCTURE.
9. CONTRACTOR RESPONSIBLE TO VERIFY ALL SIZES, LOCATIONS, AND ELEVATIONS OF OPENINGS.
10. CONTRACTOR RESPONSIBLE TO ENSURE ADEQUATE BEARING SURFACE IS PROVIDED (I.E. COMPACTED AND LEVEL PER PROJECT SPECIFICATIONS).
11. SECTION HEIGHTS, SLAB/WALL THICKNESSES, AND KEYWAYS ARE SUBJECT TO CHANGE AS REQUIRED FOR SITE REQUIREMENTS AND/OR DUE TO PRODUCT AVAILABILITY AND PRODUCTION FACILITY CONSTRAINTS.
12. FOR SITE SPECIFIC DRAWINGS WITH DETAILED STRUCTURE DIMENSIONS AND WEIGHTS, PLEASE CONTACT OLDCASTLE INFRASTRUCTURE.
13. MAXIMUM PICK WEIGHT: 23,750 LBS. (* COMBINED WEIGHT INCLUDES BAFFLE WALLS AND PRODUCT INTERNALS.)
14. INTERNALS SHALL CONSIST OF A FLOATING SKIMMER, FLOW DEFLECTORS, ELEVATED CENTRAL SCREEN SYSTEM AND SLIDING LIDS. THESE COMPONENTS EFFECTIVELY REDUCE HEAD LOSS, INCREASE POLLUTANT REMOVAL AND SIMPLIFY MAINTENANCE.

- PRELIMINARY -
NOT FOR CONSTRUCTION

THIS PRODUCT IS PROTECTED BY ONE OR MORE OF THE FOLLOWING US PATENT(S): 6,428,692; 7,270,747; 7,981,283; 8,142,666; 8,366,923; 8,491,797; 7,846,327; 8,034,236; RELATED FOREIGN PATENTS, OR OTHER PATENTS PENDING.

Oldcastle Infrastructure™ A CRH COMPANY
Ph: 800.579.8819 | www.oldcastleinfrastructure.com/stormwater

THIS DOCUMENT IS THE PROPERTY OF OLDCASTLE INFRASTRUCTURE, INC. IT IS CONFIDENTIAL, SUBMITTED FOR REFERENCE PURPOSES ONLY AND SHALL NOT BE USED IN ANY WAY INJURIOUS TO THE INTERESTS OF, OR WITHOUT THE WRITTEN PERMISSION OF OLDCASTLE INFRASTRUCTURE, INC. COPYRIGHT © 2024 OLDCASTLE INFRASTRUCTURE, INC. ALL RIGHTS RESERVED.

Nutrient Separating Baffle Box®
NSBB-612

CUSTOMER: Bowman

PROJECT NAME: Ocean Breeze Ranch (OBR) - Bonsall, CA

| DATE | MFG | DRAWN | ENGINEER | CHECKED | SALES ORDER |
|---|---|---|---|---|---|
| 6/6/24 | 070-FO | PPS | HMF | HMF | - |

| SHEET NAME | REVISION 1 | SHEET |
|---|---|---|
| 21-603205-NSBB-612_Basin 2A-2 | REV DATE 10/28/24 | 1 OF 1 |

21-603205-NSBB-612_Basin 2A-2.dwg, 2024-10-28 5:05 PM Akshata Savant 47.5096

| SITE SPECIFIC DATA | |
|---|---|
| Structure ID | Basin 2B-1 |
| Water Quality Flow Rate (cfs) | 1.33 |
| Peak Flow Rate (cfs) | 40.40 |
| Rim Elevation | 201.21' |
| Top of Vault Elevation | 198.30' |

| Pipe Data | Pipe Size | Pipe Type | Invert Elevation |
|---|---|---|---|
| Inlet | 36" | RCP | 193.73' |
| Outlet | 36" | RCP | 193.63' |

Notes:

| PERFORMANCE SPECIFICATIONS | |
|---|---|
| Screen System Storage Volume | 55.63 cf |
| Total Sump Volume | 328.67 cf |
| NJDEP Sediment Storage Volume | 68.60 cf |
| Peak Flow Capacity* | 62.00 cfs |
| Treatment Flow Capacities:* | |
| NJDEP **50% Removal, 75 micron** | 5.60 cfs |
| 80% Removal, 150 micron | 12.70 cfs |

*Contact Oldcastle for additional treatment and peak flow capacities.

**ALL PIPE ANGLES TO BE IMMEDIATELY OUTSIDE OF THE STRUCTURE, BY OTHERS.**

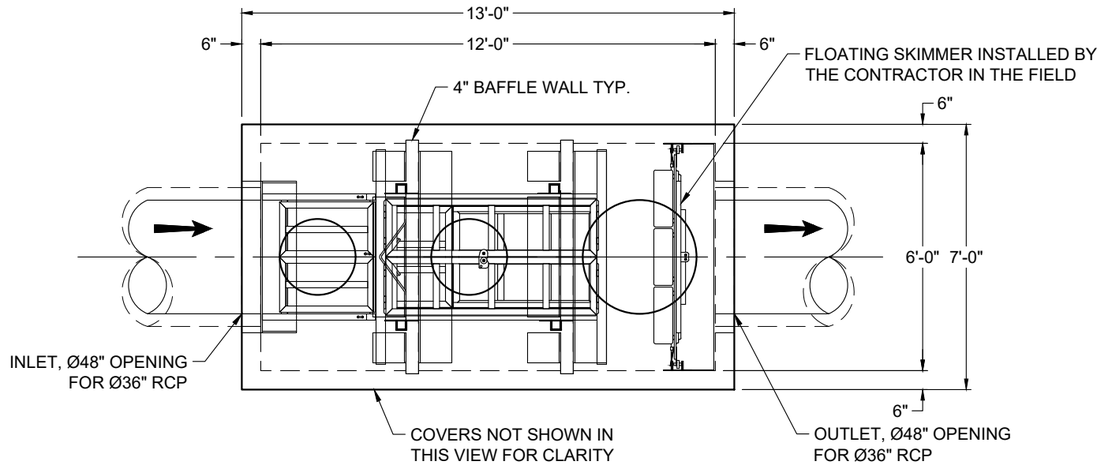


PLAN VIEW

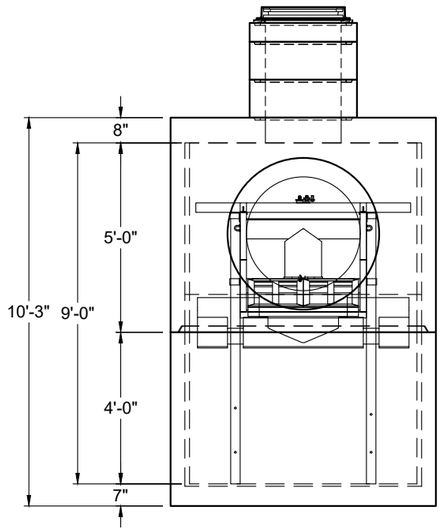


LEFT END VIEW

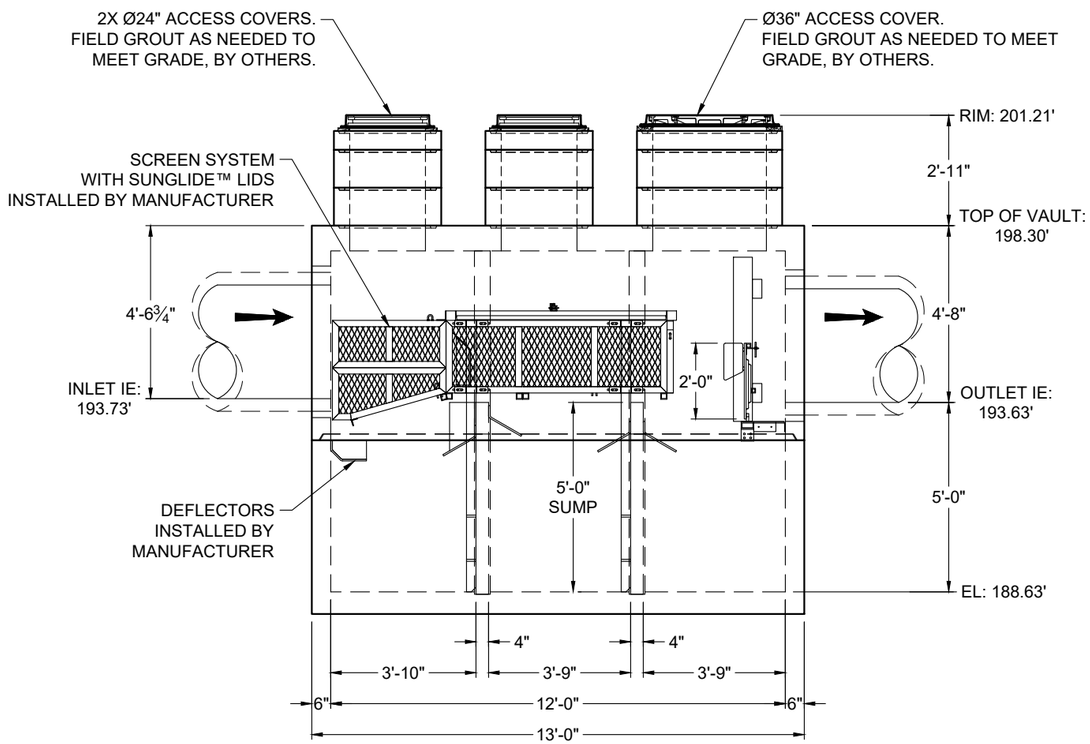


ELEVATION VIEW

NOTES:

1. DESIGN LOADINGS:
   A. AASHTO HS-20-44 (WITH IMPACT)
   B. DESIGN SOIL COVER: 5'-0" MAXIMUM
   C. ASSUMED WATER TABLE: BELOW BASE OF PRECAST (ENGINEER-OF-RECORD TO CONFIRM SITE WATER TABLE ELEVATION)
   D. LATERAL EARTH PRESSURE: 45 PCF (DRAINED)
   E. LATERAL LIVE LOAD SURCHARGE: 80 PSF (APPLIED TO 8'-0" BELOW GRADE)
   F. NO LATERAL SURCHARGE FROM ADJACENT BUILDINGS, WALLS, PIERS, OR FOUNDATIONS.
2. CONCRETE 28-DAY MINIMUM COMPRESSIVE STRENGTH: 5,000 PSI MINIMUM.
3. REINFORCING: REBAR, ASTM A615/A706, GRADE 60
4. CEMENT: ASTM C150
5. REQ'D ALLOWABLE SOIL BEARING CAPACITY: 2,500 PSF
6. REFERENCE STANDARD:
   A. ASTM C890
   B. ASTM C913
   C. ACI 318-14
7. THIS STRUCTURE IS DESIGNED TO THE PARAMETERS NOTED HEREIN. ENGINEER-OF-RECORD SHALL VERIFY THAT NOTED PARAMETERS MEET OR EXCEED PROJECT REQUIREMENTS. IF DESIGN PARAMETERS ARE INCORRECT, REVIEWING ENGINEER/AUTHORITY SHALL NOTIFY OLDCASTLE INFRASTRUCTURE UPON REVIEW OF THIS SUBMITTAL.
8. OVERSIZED HOLES TO ACCOMMODATE SPECIFIC PIPE TYPE MUST BE CONCENTRIC TO PIPE ID. AFTER PIPES ARE INSTALLED, ALL ANNULAR SPACES SHALL BE FILLED WITH A MINIMUM OF 3,000 PSI CONCRETE FOR FULL THICKNESS OF PRECAST WALLS. PIPES ARE TO BE FLUSH WITH THE INSIDE SURFACE OF THE CONCRETE STRUCTURE.
9. CONTRACTOR RESPONSIBLE TO VERIFY ALL SIZES, LOCATIONS, AND ELEVATIONS OF OPENINGS.
10. CONTRACTOR RESPONSIBLE TO ENSURE ADEQUATE BEARING SURFACE IS PROVIDED (I.E. COMPACTED AND LEVEL PER PROJECT SPECIFICATIONS).
11. SECTION HEIGHTS, SLAB/WALL THICKNESSES, AND KEYWAYS ARE SUBJECT TO CHANGE AS REQUIRED FOR SITE REQUIREMENTS AND/OR DUE TO PRODUCT AVAILABILITY AND PRODUCTION FACILITY CONSTRAINTS.
12. FOR SITE SPECIFIC DRAWINGS WITH DETAILED STRUCTURE DIMENSIONS AND WEIGHTS, PLEASE CONTACT OLDCASTLE INFRASTRUCTURE.
13. MAXIMUM PICK WEIGHT: 23,750 LBS. (* COMBINED WEIGHT INCLUDES BAFFLE WALLS AND PRODUCT INTERNALS.)
14. INTERNALS SHALL CONSIST OF A FLOATING SKIMMER, FLOW DEFLECTORS, ELEVATED CENTRAL SCREEN SYSTEM AND SLIDING LIDS. THESE COMPONENTS EFFECTIVELY REDUCE HEAD LOSS, INCREASE POLLUTANT REMOVAL AND SIMPLIFY MAINTENANCE.

- PRELIMINARY -
NOT FOR CONSTRUCTION

THIS PRODUCT IS PROTECTED BY ONE OR MORE OF THE FOLLOWING US PATENT(S): 6,428,692; 7,270,747; 7,981,283; 8,142,666; 8,366,923; 8,491,797; 7,846,327; 8,034,236; RELATED FOREIGN PATENTS, OR OTHER PATENTS PENDING.

Oldcastle Infrastructure™ A CRH COMPANY
Ph: 800.579.8819 | www.oldcastleinfrastructure.com/stormwater

THIS DOCUMENT IS THE PROPERTY OF OLDCASTLE INFRASTRUCTURE, INC. IT IS CONFIDENTIAL, SUBMITTED FOR REFERENCE PURPOSES ONLY AND SHALL NOT BE USED IN ANY WAY INJURIOUS TO THE INTERESTS OF, OR WITHOUT THE WRITTEN PERMISSION OF OLDCASTLE INFRASTRUCTURE, INC. COPYRIGHT © 2024 OLDCASTLE INFRASTRUCTURE, INC. ALL RIGHTS RESERVED.

Nutrient Separating Baffle Box®
NSBB-612

CUSTOMER: Bowman

PROJECT NAME: Ocean Breeze Ranch (OBR) - Bonsall, CA

| DATE | MFG | DRAWN | ENGINEER | CHECKED | SALES ORDER |
|---|---|---|---|---|---|
| 6/6/24 | 070-FO | PPS | HMF | HMF | - |

| SHEET NAME | REVISION 1 | SHEET |
|---|---|---|
| 21-603205-NSBB-612_Basin 2B-1 | REV DATE 10/28/24 | 1 OF 1 |

21-603205-NSBB-612_Basin 2B-1.dwg, 2024-10-28 5:23 PM Akshata Savant 4K 7#590

| SITE SPECIFIC DATA | |
|---|---|
| Structure ID | Basin 2B-2 |
| Water Quality Flow Rate (cfs) | 0.68 |
| Peak Flow Rate (cfs) | 25.20 |
| Rim Elevation | 201.88' |
| Top of Vault Elevation | 198.33' |

| Pipe Data | Pipe Size | Pipe Type | Invert Elevation |
|---|---|---|---|
| Inlet | 30" | RCP | 193.76' |
| Outlet | 30" | RCP | 193.66' |

Notes:

| PERFORMANCE SPECIFICATIONS | |
|---|---|
| Screen System Storage Volume | 55.63 cf |
| Total Sump Volume | 328.67 cf |
| NJDEP Sediment Storage Volume | 68.60 cf |
| Peak Flow Capacity* | 62.00 cfs |
| Treatment Flow Capacities:* | |
| NJDEP **50% Removal, 75 micron** | 5.60 cfs |
| 80% Removal, 150 micron | 12.70 cfs |

*Contact Oldcastle for additional treatment and peak flow capacities.

**ALL PIPE ANGLES TO BE IMMEDIATELY OUTSIDE OF THE STRUCTURE, BY OTHERS.**

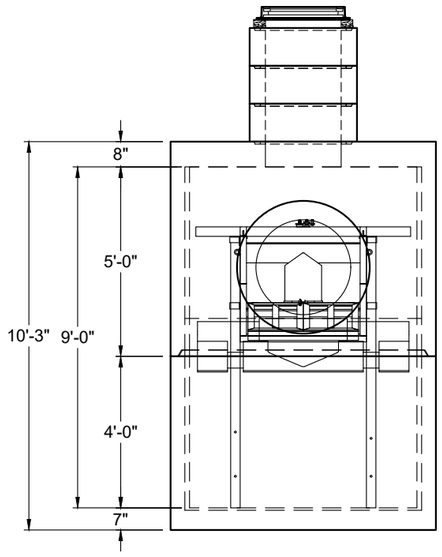


LEFT END VIEW

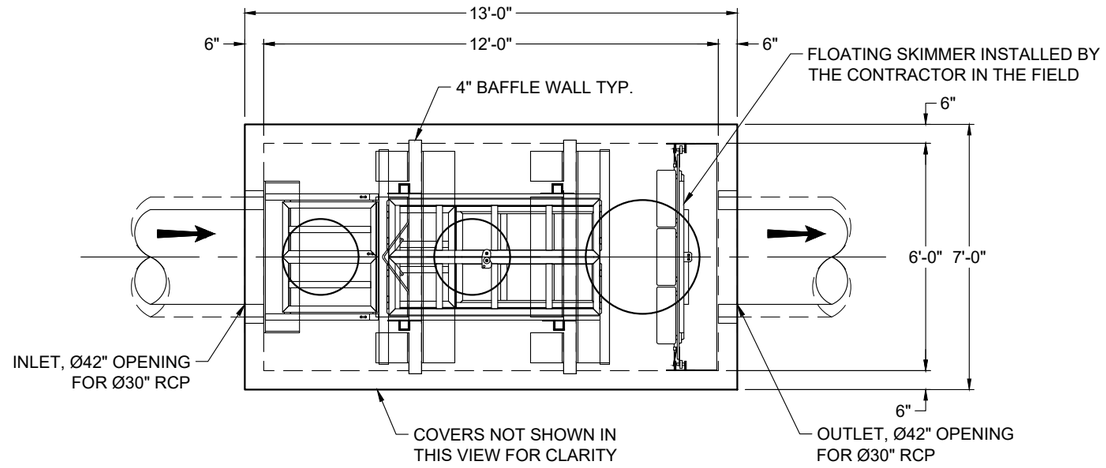


PLAN VIEW

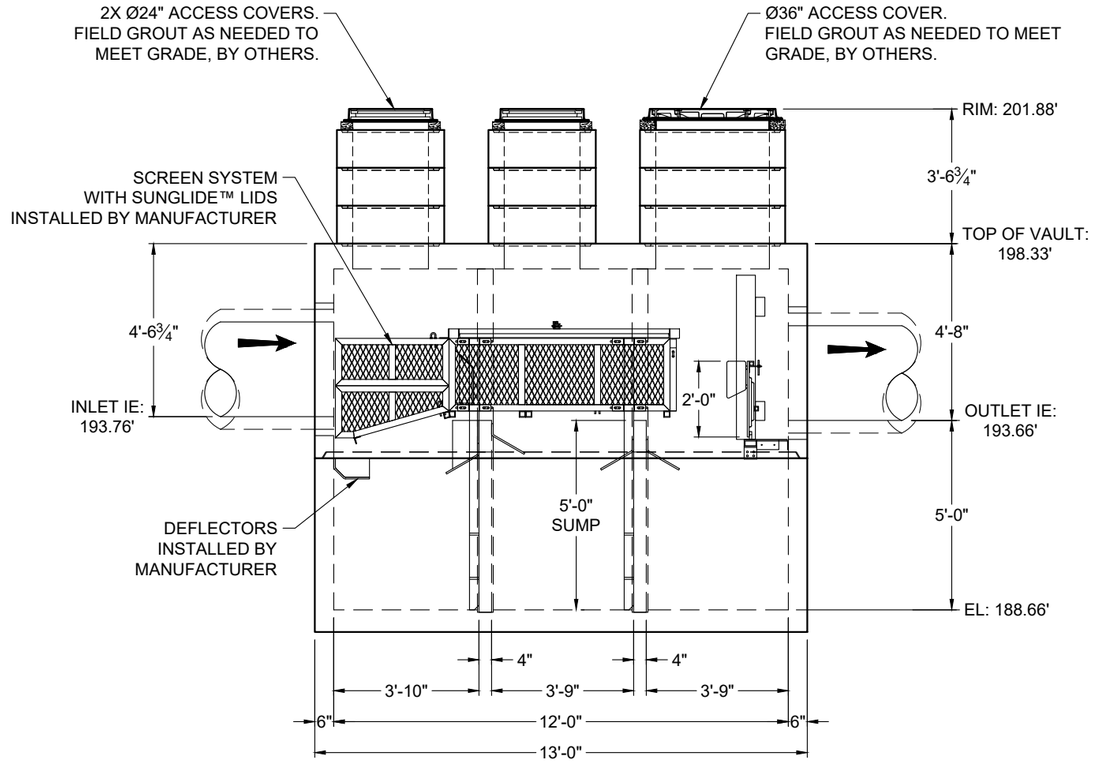


ELEVATION VIEW

NOTES:

1. DESIGN LOADINGS:
   A. AASHTO HS-20-44 (WITH IMPACT)
   B. DESIGN SOIL COVER: 5'-0" MAXIMUM
   C. ASSUMED WATER TABLE: BELOW BASE OF PRECAST (ENGINEER-OF-RECORD TO CONFIRM SITE WATER TABLE ELEVATION)
   D. LATERAL EARTH PRESSURE: 45 PCF (DRAINED)
   E. LATERAL LIVE LOAD SURCHARGE: 80 PSF (APPLIED TO 8'-0" BELOW GRADE)
   F. NO LATERAL SURCHARGE FROM ADJACENT BUILDINGS, WALLS, PIERS, OR FOUNDATIONS.
2. CONCRETE 28-DAY MINIMUM COMPRESSIVE STRENGTH: 5,000 PSI MINIMUM.
3. REINFORCING: REBAR, ASTM A615/A706, GRADE 60
4. CEMENT: ASTM C150
5. REQ'D ALLOWABLE SOIL BEARING CAPACITY: 2,500 PSF
6. REFERENCE STANDARD:
   A. ASTM C890
   B. ASTM C913
   C. ACI 318-14
7. THIS STRUCTURE IS DESIGNED TO THE PARAMETERS NOTED HEREIN. ENGINEER-OF-RECORD SHALL VERIFY THAT NOTED PARAMETERS MEET OR EXCEED PROJECT REQUIREMENTS. IF DESIGN PARAMETERS ARE INCORRECT, REVIEWING ENGINEER/AUTHORITY SHALL NOTIFY OLDCASTLE INFRASTRUCTURE UPON REVIEW OF THIS SUBMITTAL.
8. OVERSIZED HOLES TO ACCOMMODATE SPECIFIC PIPE TYPE MUST BE CONCENTRIC TO PIPE ID. AFTER PIPES ARE INSTALLED, ALL ANNULAR SPACES SHALL BE FILLED WITH A MINIMUM OF 3,000 PSI CONCRETE FOR FULL THICKNESS OF PRECAST WALLS. PIPES ARE TO BE FLUSH WITH THE INSIDE SURFACE OF THE CONCRETE STRUCTURE.
9. CONTRACTOR RESPONSIBLE TO VERIFY ALL SIZES, LOCATIONS, AND ELEVATIONS OF OPENINGS.
10. CONTRACTOR RESPONSIBLE TO ENSURE ADEQUATE BEARING SURFACE IS PROVIDED (I.E. COMPACTED AND LEVEL PER PROJECT SPECIFICATIONS).
11. SECTION HEIGHTS, SLAB/WALL THICKNESSES, AND KEYWAYS ARE SUBJECT TO CHANGE AS REQUIRED FOR SITE REQUIREMENTS AND/OR DUE TO PRODUCT AVAILABILITY AND PRODUCTION FACILITY CONSTRAINTS.
12. FOR SITE SPECIFIC DRAWINGS WITH DETAILED STRUCTURE DIMENSIONS AND WEIGHTS, PLEASE CONTACT OLDCASTLE INFRASTRUCTURE.
13. MAXIMUM PICK WEIGHT: 23,750 LBS. (* COMBINED WEIGHT INCLUDES BAFFLE WALLS AND PRODUCT INTERNALS.)
14. INTERNALS SHALL CONSIST OF A FLOATING SKIMMER, FLOW DEFLECTORS, ELEVATED CENTRAL SCREEN SYSTEM AND SLIDING LIDS. THESE COMPONENTS EFFECTIVELY REDUCE HEAD LOSS, INCREASE POLLUTANT REMOVAL AND SIMPLIFY MAINTENANCE.

- PRELIMINARY -
NOT FOR CONSTRUCTION

THIS PRODUCT IS PROTECTED BY ONE OR MORE OF THE FOLLOWING US PATENT(S): 6,428,692; 7,270,747; 7,981,283; 8,142,666; 8,366,923; 8,491,797; 7,846,327; 8,034,236; RELATED FOREIGN PATENTS, OR OTHER PATENTS PENDING.

Oldcastle Infrastructure™
A CRH COMPANY
Ph: 800.579.8819 | www.oldcastleinfrastructure.com/stormwater

THIS DOCUMENT IS THE PROPERTY OF OLDCASTLE INFRASTRUCTURE, INC. IT IS CONFIDENTIAL, SUBMITTED FOR REFERENCE PURPOSES ONLY AND SHALL NOT BE USED IN ANY WAY INJURIOUS TO THE INTERESTS OF, OR WITHOUT THE WRITTEN PERMISSION OF OLDCASTLE INFRASTRUCTURE, INC. COPYRIGHT © 2024 OLDCASTLE INFRASTRUCTURE, INC. ALL RIGHTS RESERVED.

Nutrient Separating Baffle Box®
NSBB-612

CUSTOMER: Bowman

PROJECT NAME: Ocean Breeze Ranch (OBR) - Bonsall, CA

| DATE | MFG | DRAWN | ENGINEER | CHECKED | SALES ORDER |
|---|---|---|---|---|---|
| 6/6/24 | 070-FO | PPS | HMF | HMF | - |

| SHEET NAME | REVISION | SHEET |
|---|---|---|
| 21-603205-NSBB-612_Basin 2B-2 | 1 | 1 OF 1 |
| | REV DATE 10/28/24 | |

21-603205-NSBB-612_Basin 2B-2.dwg, 2024-10-28 5:11 PM, Akshata Savant, ak.5712

| SITE SPECIFIC DATA | |
|---|---|
| Structure ID | Basin 2C-1 |
| Water Quality Flow Rate (cfs) | 0.67 |
| Peak Flow Rate (cfs) | 20.40 |
| Rim Elevation | 197.19' |
| Top of Vault Elevation | 195.45' |

| Pipe Data | Pipe Size | Pipe Type | Invert Elevation |
|---|---|---|---|
| Inlet | 30" | HDPE | 190.88' |
| Outlet | 30" | HDPE | 190.78' |

Notes:

| PERFORMANCE SPECIFICATIONS | |
|---|---|
| Screen System Storage Volume | 55.63 cf |
| Total Sump Volume | 328.67 cf |
| NJDEP Sediment Storage Volume | 68.60 cf |
| Peak Flow Capacity* | 62.00 cfs |
| Treatment Flow Capacities:* | |
| NJDEP **50% Removal, 75 micron** | 5.60 cfs |
| 80% Removal, 150 micron | 12.70 cfs |

*Contact Oldcastle for additional treatment and peak flow capacities.

**ALL PIPE ANGLES TO BE IMMEDIATELY OUTSIDE OF THE STRUCTURE, BY OTHERS.**

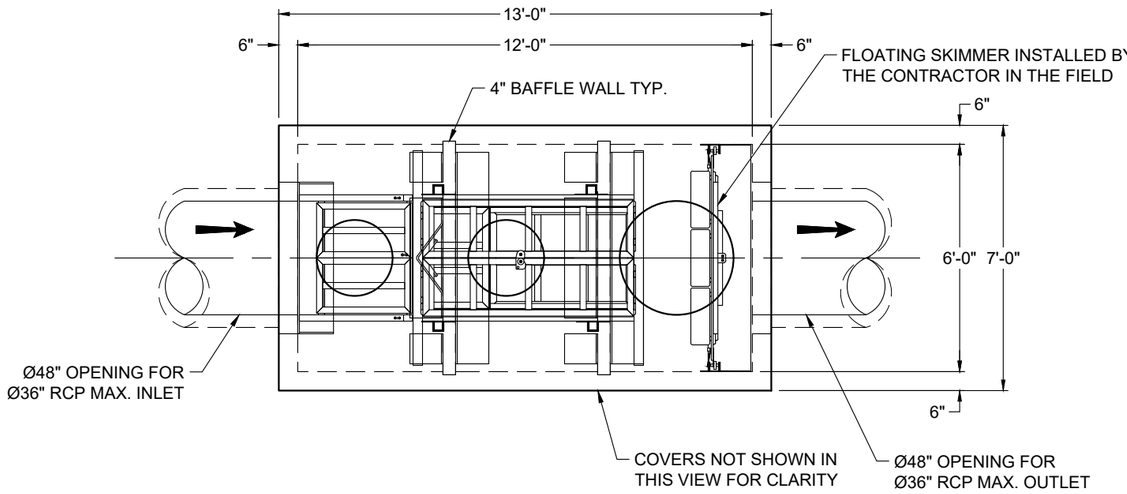


PLAN VIEW

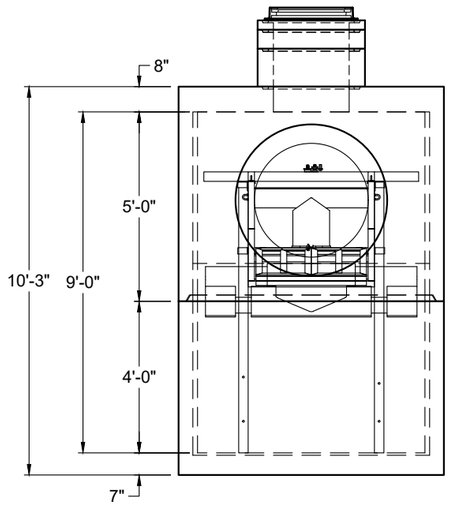


LEFT END VIEW

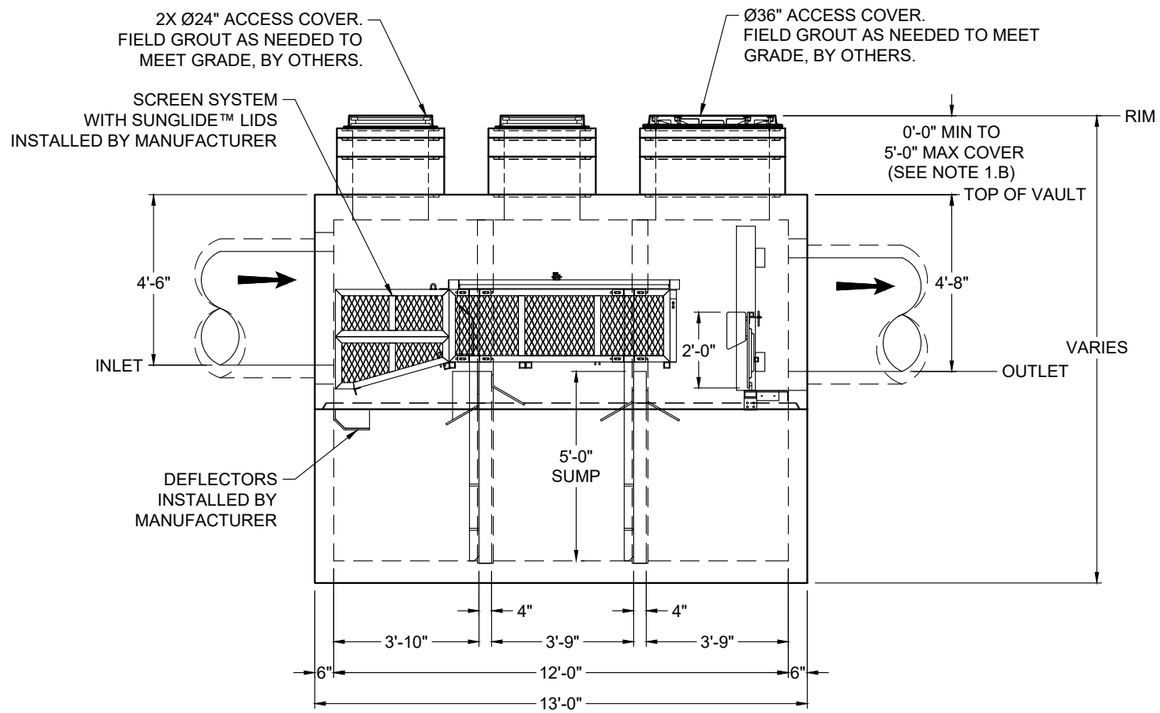


ELEVATION VIEW

NOTES:

1. DESIGN LOADINGS:
   A. AASHTO HS-20-44 (WITH IMPACT)
   B. DESIGN SOIL COVER: 5'-0" MAXIMUM
   C. ASSUMED WATER TABLE: BELOW BASE OF PRECAST (ENGINEER-OF-RECORD TO CONFIRM SITE WATER TABLE ELEVATION)
   D. LATERAL EARTH PRESSURE: 45 PCF (DRAINED)
   E. LATERAL LIVE LOAD SURCHARGE: 80 PSF (APPLIED TO 8'-0" BELOW GRADE)
   F. NO LATERAL SURCHARGE FROM ADJACENT BUILDINGS, WALLS, PIERS, OR FOUNDATIONS.
2. CONCRETE 28-DAY MINIMUM COMPRESSIVE STRENGTH: 5,000 PSI MINIMUM.
3. REINFORCING: REBAR, ASTM A615/A706, GRADE 60
4. CEMENT: ASTM C150
5. REQ'D ALLOWABLE SOIL BEARING CAPACITY: 2,500 PSF
6. REFERENCE STANDARD:
   A. ASTM C890
   B. ASTM C913
   C. ACI 318-14
7. THIS STRUCTURE IS DESIGNED TO THE PARAMETERS NOTED HEREIN. ENGINEER-OF-RECORD SHALL VERIFY THAT NOTED PARAMETERS MEET OR EXCEED PROJECT REQUIREMENTS. IF DESIGN PARAMETERS ARE INCORRECT, REVIEWING ENGINEER/AUTHORITY SHALL NOTIFY OLDCASTLE INFRASTRUCTURE UPON REVIEW OF THIS SUBMITTAL.
8. OVERSIZED HOLES TO ACCOMMODATE SPECIFIC PIPE TYPE MUST BE CONCENTRIC TO PIPE ID. AFTER PIPES ARE INSTALLED, ALL ANNULAR SPACES SHALL BE FILLED WITH A MINIMUM OF 3,000 PSI CONCRETE FOR FULL THICKNESS OF PRECAST WALLS. PIPES ARE TO BE FLUSH WITH THE INSIDE SURFACE OF THE CONCRETE STRUCTURE.
9. CONTRACTOR RESPONSIBLE TO VERIFY ALL SIZES, LOCATIONS, AND ELEVATIONS OF OPENINGS.
10. CONTRACTOR RESPONSIBLE TO ENSURE ADEQUATE BEARING SURFACE IS PROVIDED (I.E. COMPACTED AND LEVEL PER PROJECT SPECIFICATIONS).
11. SECTION HEIGHTS, SLAB/WALL THICKNESSES, AND KEYWAYS ARE SUBJECT TO CHANGE AS REQUIRED FOR SITE REQUIREMENTS AND/OR DUE TO PRODUCT AVAILABILITY AND PRODUCTION FACILITY CONSTRAINTS.
12. FOR SITE SPECIFIC DRAWINGS WITH DETAILED STRUCTURE DIMENSIONS AND WEIGHTS, PLEASE CONTACT OLDCASTLE INFRASTRUCTURE.
13. MAXIMUM PICK WEIGHT: 23,750 LBS. (* COMBINED WEIGHT INCLUDES BAFFLE WALLS AND PRODUCT INTERNALS.)
14. INTERNALS SHALL CONSIST OF A FLOATING SKIMMER, FLOW DEFLECTORS, ELEVATED CENTRAL SCREEN SYSTEM AND SLIDING LIDS. THESE COMPONENTS EFFECTIVELY REDUCE HEAD LOSS, INCREASE POLLUTANT REMOVAL AND SIMPLIFY MAINTENANCE.

- PRELIMINARY -
NOT FOR CONSTRUCTION

THIS PRODUCT IS PROTECTED BY ONE OR MORE OF THE FOLLOWING US PATENT(S): 6,428,692; 7,270,747; 7,981,283; 8,142,666; 8,366,923; 8,491,797; 7,846,327; 8,034,236; RELATED FOREIGN PATENTS, OR OTHER PATENTS PENDING.

Oldcastle Infrastructure™
A CRH COMPANY
Ph: 800.579.8819 | www.oldcastleinfrastructure.com/stormwater

THIS DOCUMENT IS THE PROPERTY OF OLDCASTLE INFRASTRUCTURE, INC. IT IS CONFIDENTIAL, SUBMITTED FOR REFERENCE PURPOSES ONLY AND SHALL NOT BE USED IN ANY WAY INJURIOUS TO THE INTERESTS OF, OR WITHOUT THE WRITTEN PERMISSION OF OLDCASTLE INFRASTRUCTURE, INC. COPYRIGHT © 2024 OLDCASTLE INFRASTRUCTURE, INC. ALL RIGHTS RESERVED.

Nutrient Separating Baffle Box®
NSBB-612

CUSTOMER: Bowman

PROJECT NAME: Ocean Breeze Ranch (OBR) - Bonsall, CA

| DATE | MFG | DRAWN | ENGINEER | CHECKED | SALES ORDER |
|---|---|---|---|---|---|
| 6/6/24 | 070-FO | PPS | AFD | AFD | - |

| SHEET NAME | REVISION | SHEET |
|---|---|---|
| 21-603205-NSBB-612_Basin 2C-1 | - | 1 OF 1 |
| | REV DATE: - | |

21-603205-NSBB-612_Basin 2C-1.dwg, 2024-06-06 4:58 PM Pravin Ghadge,46.3243

| SITE SPECIFIC DATA | |
|---|---|
| Structure ID | Basin 2H-1 |
| Water Quality Flow Rate (cfs) | 0.90 |
| Peak Flow Rate (cfs) | 29.60 |
| Rim Elevation | 203.98' |
| Top of Vault Elevation | 197.87' |

| Pipe Data | Pipe Size | Pipe Type | Invert Elevation |
|---|---|---|---|
| Inlet | 30" | HDPE | 193.53' |
| Outlet | 30" | HDPE | 193.20' |

Notes:

| PERFORMANCE SPECIFICATIONS | |
|---|---|
| Screen System Storage Volume | 55.63 cf |
| Total Sump Volume | 328.67 cf |
| NJDEP Sediment Storage Volume | 68.60 cf |
| Peak Flow Capacity* | 62.00 cfs |
| Treatment Flow Capacities:* | |
| NJDEP **50% Removal, 75 micron** | 5.60 cfs |
| 80% Removal, 150 micron | 12.70 cfs |

*Contact Oldcastle for additional treatment and peak flow capacities.

**ALL PIPE ANGLES TO BE IMMEDIATELY OUTSIDE OF THE STRUCTURE, BY OTHERS.**

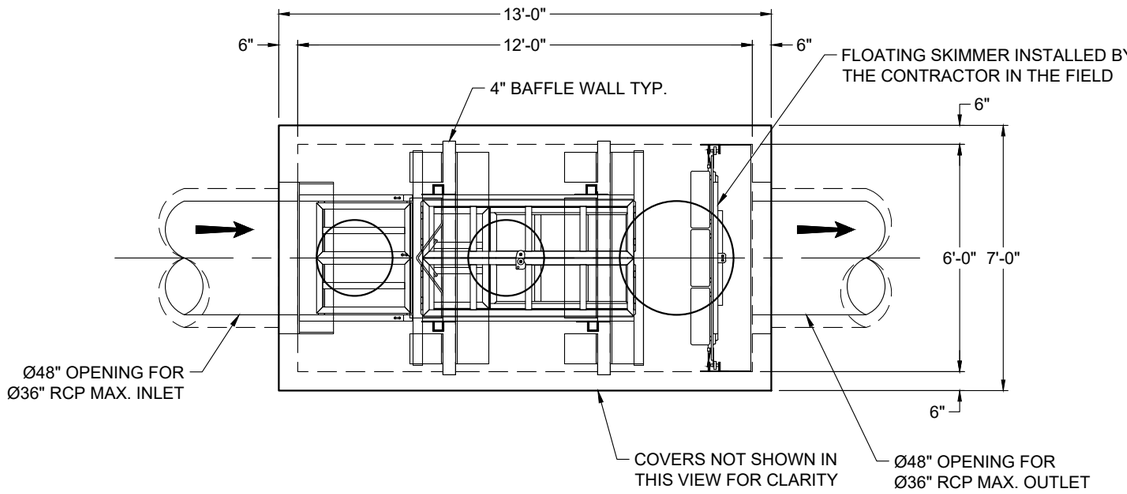


PLAN VIEW

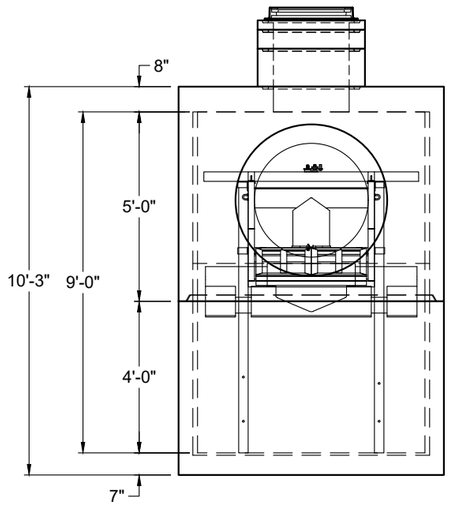


LEFT END VIEW

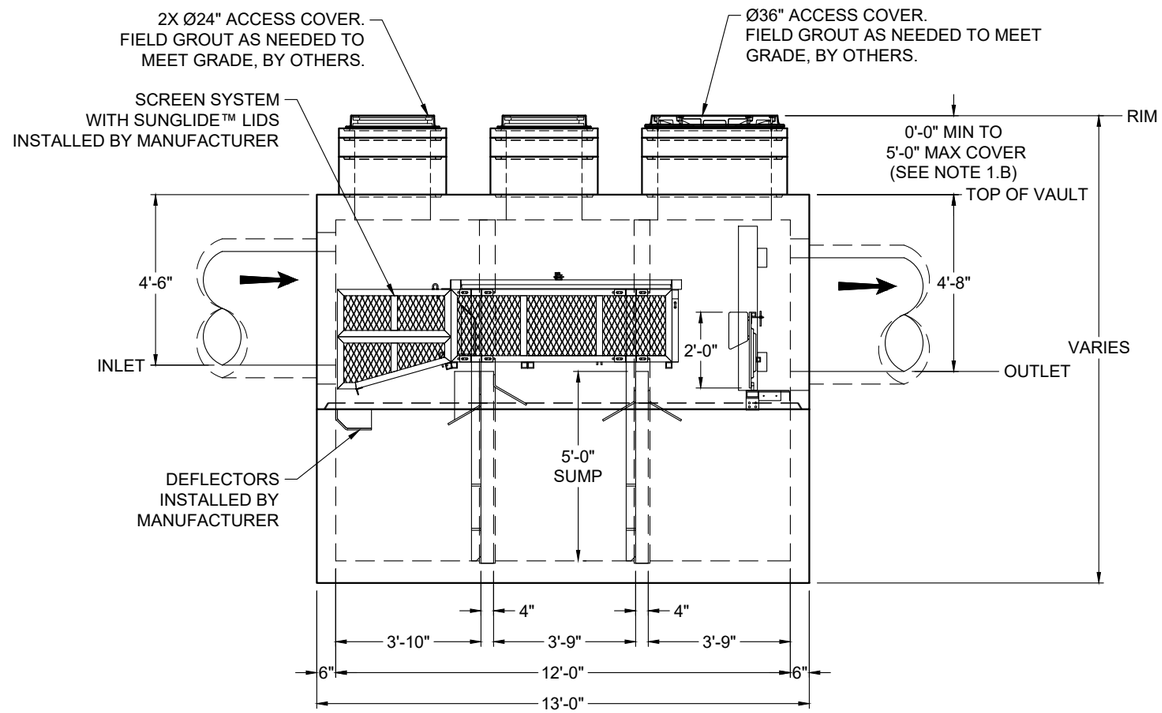


ELEVATION VIEW

NOTES:

1. DESIGN LOADINGS:
   A. AASHTO HS-20-44 (WITH IMPACT)
   B. DESIGN SOIL COVER: 5'-0" MAXIMUM
   C. ASSUMED WATER TABLE: BELOW BASE OF PRECAST (ENGINEER-OF-RECORD TO CONFIRM SITE WATER TABLE ELEVATION)
   D. LATERAL EARTH PRESSURE: 45 PCF (DRAINED)
   E. LATERAL LIVE LOAD SURCHARGE: 80 PSF (APPLIED TO 8'-0" BELOW GRADE)
   F. NO LATERAL SURCHARGE FROM ADJACENT BUILDINGS, WALLS, PIERS, OR FOUNDATIONS.
2. CONCRETE 28-DAY MINIMUM COMPRESSIVE STRENGTH: 5,000 PSI MINIMUM.
3. REINFORCING: REBAR, ASTM A615/A706, GRADE 60
4. CEMENT: ASTM C150
5. REQ'D ALLOWABLE SOIL BEARING CAPACITY: 2,500 PSF
6. REFERENCE STANDARD:
   A. ASTM C890
   B. ASTM C913
   C. ACI 318-14
7. THIS STRUCTURE IS DESIGNED TO THE PARAMETERS NOTED HEREIN. ENGINEER-OF-RECORD SHALL VERIFY THAT NOTED PARAMETERS MEET OR EXCEED PROJECT REQUIREMENTS. IF DESIGN PARAMETERS ARE INCORRECT, REVIEWING ENGINEER/AUTHORITY SHALL NOTIFY OLDCASTLE INFRASTRUCTURE UPON REVIEW OF THIS SUBMITTAL.
8. OVERSIZED HOLES TO ACCOMMODATE SPECIFIC PIPE TYPE MUST BE CONCENTRIC TO PIPE ID. AFTER PIPES ARE INSTALLED, ALL ANNULAR SPACES SHALL BE FILLED WITH A MINIMUM OF 3,000 PSI CONCRETE FOR FULL THICKNESS OF PRECAST WALLS. PIPES ARE TO BE FLUSH WITH THE INSIDE SURFACE OF THE CONCRETE STRUCTURE.
9. CONTRACTOR RESPONSIBLE TO VERIFY ALL SIZES, LOCATIONS, AND ELEVATIONS OF OPENINGS.
10. CONTRACTOR RESPONSIBLE TO ENSURE ADEQUATE BEARING SURFACE IS PROVIDED (I.E. COMPACTED AND LEVEL PER PROJECT SPECIFICATIONS).
11. SECTION HEIGHTS, SLAB/WALL THICKNESSES, AND KEYWAYS ARE SUBJECT TO CHANGE AS REQUIRED FOR SITE REQUIREMENTS AND/OR DUE TO PRODUCT AVAILABILITY AND PRODUCTION FACILITY CONSTRAINTS.
12. FOR SITE SPECIFIC DRAWINGS WITH DETAILED STRUCTURE DIMENSIONS AND WEIGHTS, PLEASE CONTACT OLDCASTLE INFRASTRUCTURE.
13. MAXIMUM PICK WEIGHT: 23,750 LBS. (* COMBINED WEIGHT INCLUDES BAFFLE WALLS AND PRODUCT INTERNALS.)
14. INTERNALS SHALL CONSIST OF A FLOATING SKIMMER, FLOW DEFLECTORS, ELEVATED CENTRAL SCREEN SYSTEM AND SLIDING LIDS. THESE COMPONENTS EFFECTIVELY REDUCE HEAD LOSS, INCREASE POLLUTANT REMOVAL AND SIMPLIFY MAINTENANCE.

- PRELIMINARY -
NOT FOR CONSTRUCTION

THIS PRODUCT IS PROTECTED BY ONE OR MORE OF THE FOLLOWING US PATENT(S): 6,428,692; 7,270,747; 7,981,283; 8,142,666; 8,366,923; 8,491,797; 7,846,327; 8,034,236; RELATED FOREIGN PATENTS, OR OTHER PATENTS PENDING.

Oldcastle Infrastructure™
A CRH COMPANY
Ph: 800.579.8819 | www.oldcastleinfrastructure.com/stormwater

THIS DOCUMENT IS THE PROPERTY OF OLDCASTLE INFRASTRUCTURE, INC. IT IS CONFIDENTIAL, SUBMITTED FOR REFERENCE PURPOSES ONLY AND SHALL NOT BE USED IN ANY WAY INJURIOUS TO THE INTERESTS OF, OR WITHOUT THE WRITTEN PERMISSION OF OLDCASTLE INFRASTRUCTURE, INC. COPYRIGHT © 2024 OLDCASTLE INFRASTRUCTURE, INC. ALL RIGHTS RESERVED.

Nutrient Separating Baffle Box®
NSBB-612

CUSTOMER: Bowman

PROJECT NAME: Ocean Breeze Ranch (OBR) - Bonsall, CA

| DATE | MFG | DRAWN | ENGINEER | CHECKED | SALES ORDER |
|---|---|---|---|---|---|
| 6/6/24 | 070-FO | PPS | AFD | AFD | - |

| SHEET NAME | REVISION | SHEET |
|---|---|---|
| 21-603205-NSBB-612_Basin 2H-1 | - | 1 OF 1 |
| | REV DATE: - | |

21-603205-NSBB-612_Basin 2H-1.dwg, 2024-06-06 4:58 PM Prawin Ghadge,46.3632

| SITE SPECIFIC DATA | |
|---|---|
| Structure ID | Basin 3C-1 |
| Water Quality Flow Rate (cfs) | 0.75 |
| Peak Flow Rate (cfs) | 19.00 |
| Rim Elevation | 244.06' |
| Top of Vault Elevation | 243.68' |

| Pipe Data | Pipe Size | Pipe Type | Invert Elevation |
|---|---|---|---|
| Inlet | 30" | HDPE | 239.15' |
| Outlet | 30" | RCP | 239.10' |

Notes:

| PERFORMANCE SPECIFICATIONS | |
|---|---|
| Screen System Storage Volume | 55.63 cf |
| Total Sump Volume | 328.67 cf |
| NJDEP Sediment Storage Volume | 68.60 cf |
| Peak Flow Capacity* | 62.00 cfs |
| Treatment Flow Capacities:* | |
| NJDEP **50% Removal, 75 micron** | 5.60 cfs |
| 80% Removal, 150 micron | 12.70 cfs |

*Contact Oldcastle for additional treatment and peak flow capacities.

**ALL PIPE ANGLES TO BE IMMEDIATELY OUTSIDE OF THE STRUCTURE, BY OTHERS.**

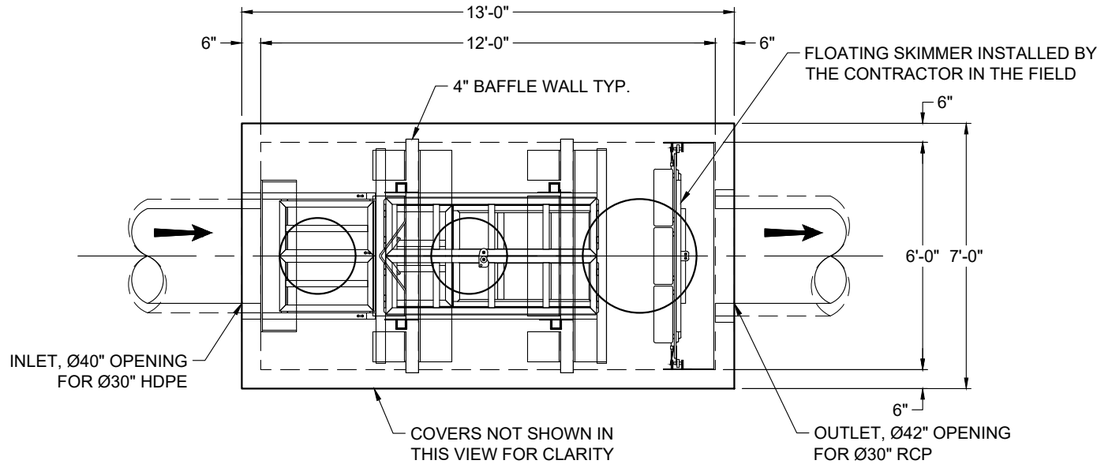


PLAN VIEW

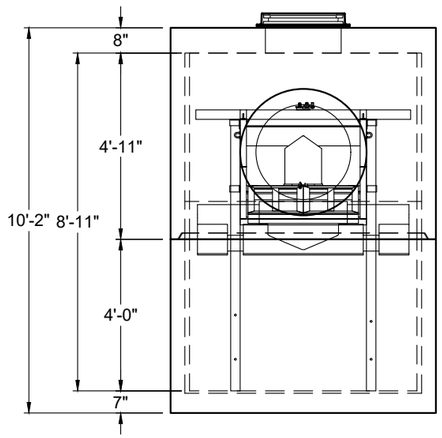


LEFT END VIEW

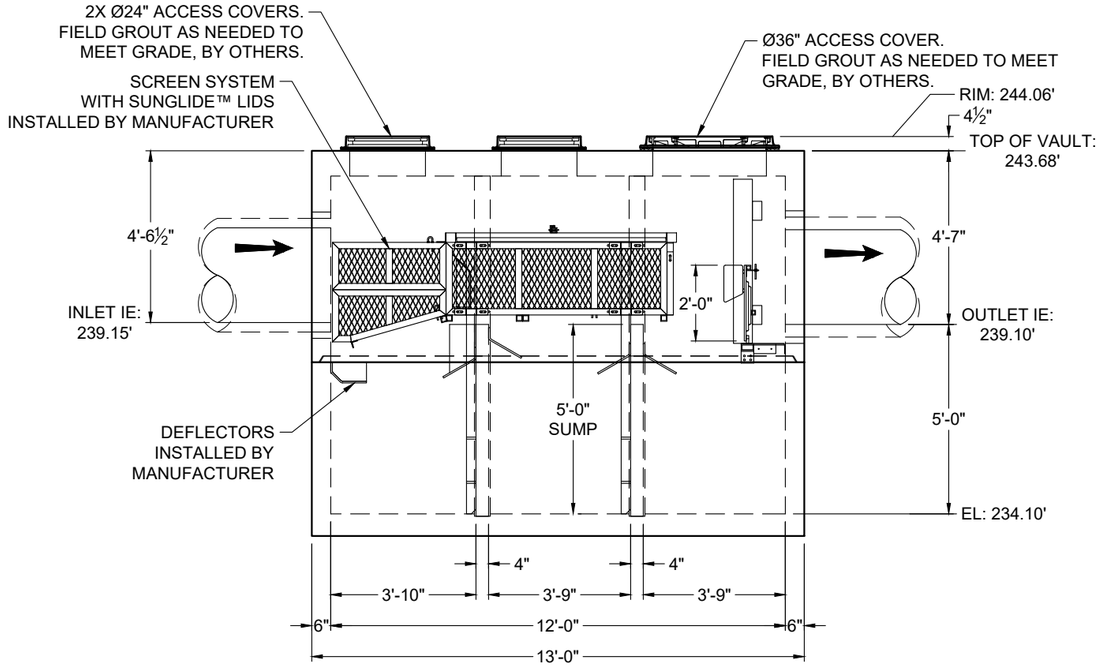


ELEVATION VIEW

NOTES:

1. DESIGN LOADINGS:
   A. AASHTO HS-20-44 (WITH IMPACT)
   B. DESIGN SOIL COVER: 5'-0" MAXIMUM
   C. ASSUMED WATER TABLE: BELOW BASE OF PRECAST (ENGINEER-OF-RECORD TO CONFIRM SITE WATER TABLE ELEVATION)
   D. LATERAL EARTH PRESSURE: 45 PCF (DRAINED)
   E. LATERAL LIVE LOAD SURCHARGE: 80 PSF (APPLIED TO 8'-0" BELOW GRADE)
   F. NO LATERAL SURCHARGE FROM ADJACENT BUILDINGS, WALLS, PIERS, OR FOUNDATIONS.
2. CONCRETE 28-DAY MINIMUM COMPRESSIVE STRENGTH: 5,000 PSI MINIMUM.
3. REINFORCING: REBAR, ASTM A615/A706, GRADE 60
4. CEMENT: ASTM C150
5. REQ'D ALLOWABLE SOIL BEARING CAPACITY: 2,500 PSF
6. REFERENCE STANDARD:
   A. ASTM C890
   B. ASTM C913
   C. ACI 318-14
7. THIS STRUCTURE IS DESIGNED TO THE PARAMETERS NOTED HEREIN. ENGINEER-OF-RECORD SHALL VERIFY THAT NOTED PARAMETERS MEET OR EXCEED PROJECT REQUIREMENTS. IF DESIGN PARAMETERS ARE INCORRECT, REVIEWING ENGINEER/AUTHORITY SHALL NOTIFY OLDCASTLE INFRASTRUCTURE UPON REVIEW OF THIS SUBMITTAL.
8. OVERSIZED HOLES TO ACCOMMODATE SPECIFIC PIPE TYPE MUST BE CONCENTRIC TO PIPE ID. AFTER PIPES ARE INSTALLED, ALL ANNULAR SPACES SHALL BE FILLED WITH A MINIMUM OF 3,000 PSI CONCRETE FOR FULL THICKNESS OF PRECAST WALLS. PIPES ARE TO BE FLUSH WITH THE INSIDE SURFACE OF THE CONCRETE STRUCTURE.
9. CONTRACTOR RESPONSIBLE TO VERIFY ALL SIZES, LOCATIONS, AND ELEVATIONS OF OPENINGS.
10. CONTRACTOR RESPONSIBLE TO ENSURE ADEQUATE BEARING SURFACE IS PROVIDED (I.E. COMPACTED AND LEVEL PER PROJECT SPECIFICATIONS).
11. SECTION HEIGHTS, SLAB/WALL THICKNESSES, AND KEYWAYS ARE SUBJECT TO CHANGE AS REQUIRED FOR SITE REQUIREMENTS AND/OR DUE TO PRODUCT AVAILABILITY AND PRODUCTION FACILITY CONSTRAINTS.
12. FOR SITE SPECIFIC DRAWINGS WITH DETAILED STRUCTURE DIMENSIONS AND WEIGHTS, PLEASE CONTACT OLDCASTLE INFRASTRUCTURE.
13. MAXIMUM PICK WEIGHT: 23,750 LBS. (* COMBINED WEIGHT INCLUDES BAFFLE WALLS AND PRODUCT INTERNALS.)
14. INTERNALS SHALL CONSIST OF A FLOATING SKIMMER, FLOW DEFLECTORS, ELEVATED CENTRAL SCREEN SYSTEM AND SLIDING LIDS. THESE COMPONENTS EFFECTIVELY REDUCE HEAD LOSS, INCREASE POLLUTANT REMOVAL AND SIMPLIFY MAINTENANCE.

**- PRELIMINARY - NOT FOR CONSTRUCTION**

THIS PRODUCT IS PROTECTED BY ONE OR MORE OF THE FOLLOWING US PATENT(S): 6,428,692; 7,270,747; 7,981,283; 8,142,666; 8,366,923; 8,491,797; 7,846,327; 8,034,236; RELATED FOREIGN PATENTS, OR OTHER PATENTS PENDING.

Oldcastle Infrastructure™ A CRH COMPANY
Ph: 800.579.8819 | www.oldcastleinfrastructure.com/stormwater

THIS DOCUMENT IS THE PROPERTY OF OLDCASTLE INFRASTRUCTURE, INC. IT IS CONFIDENTIAL, SUBMITTED FOR REFERENCE PURPOSES ONLY AND SHALL NOT BE USED IN ANY WAY INJURIOUS TO THE INTERESTS OF, OR WITHOUT THE WRITTEN PERMISSION OF OLDCASTLE INFRASTRUCTURE, INC. COPYRIGHT © 2024 OLDCASTLE INFRASTRUCTURE, INC. ALL RIGHTS RESERVED.

Nutrient Separating Baffle Box®
NSBB-612

CUSTOMER: Bowman

PROJECT NAME: Ocean Breeze Ranch (OBR) - Bonsall, CA

| DATE | MFG | DRAWN | ENGINEER | CHECKED | SALES ORDER |
|---|---|---|---|---|---|
| 6/6/24 | 070-FO | PPS | HMF | HMF | - |

| SHEET NAME | REVISION | SHEET |
|---|---|---|
| 21-603205-NSBB-612_Basin 3C-1 | 1<br>REV DATE 10/28/24 | 1 OF 1 |

21-603205-NSBB-612_Basin 3C-1.dwg, 2024-10-28 5:30 PM Akshata Savant 46 6646

| SITE SPECIFIC DATA | |
|---|---|
| Structure ID | Basin 3D-1 |
| Water Quality Flow Rate (cfs) | 1.73 |
| Peak Flow Rate (cfs) | 48.00 |
| Rim Elevation | 231.13' |
| Top of Vault Elevation | 229.48' |

| Pipe Data | Pipe Size | Pipe Type | Invert Elevation |
|---|---|---|---|
| Inlet | 36" | HDPE | 224.91' |
| Outlet | 36" | RCP | 224.81' |

Notes:

| PERFORMANCE SPECIFICATIONS | |
|---|---|
| Screen System Storage Volume | 55.63 cf |
| Total Sump Volume | 328.67 cf |
| NJDEP Sediment Storage Volume | 68.60 cf |
| Peak Flow Capacity* | 62.00 cfs |
| Treatment Flow Capacities:* | |
| NJDEP **50% Removal, 75 micron** | 5.60 cfs |
| 80% Removal, 150 micron | 12.70 cfs |

*Contact Oldcastle for additional treatment and peak flow capacities.

**ALL PIPE ANGLES TO BE IMMEDIATELY OUTSIDE OF THE STRUCTURE, BY OTHERS.**

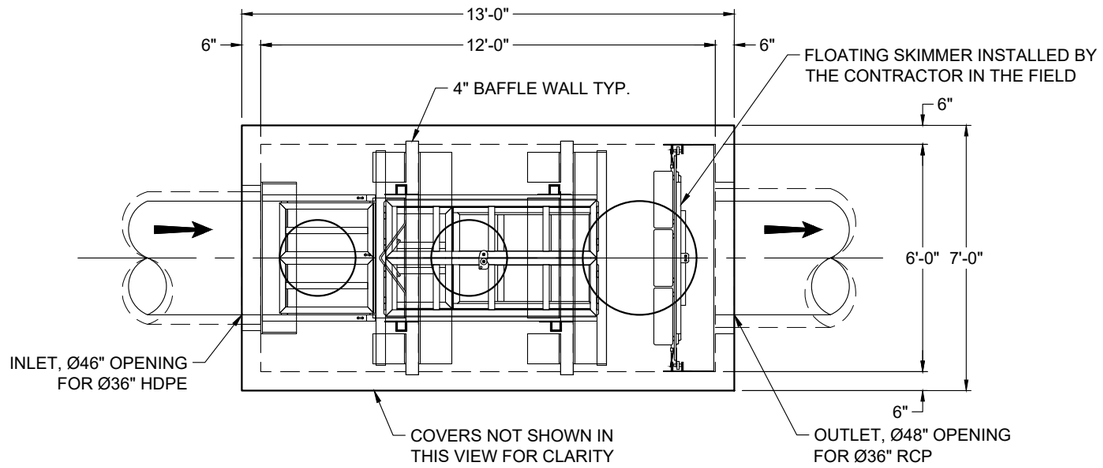


PLAN VIEW

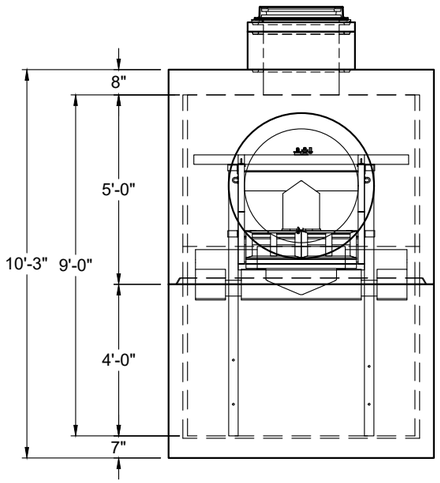


LEFT END VIEW

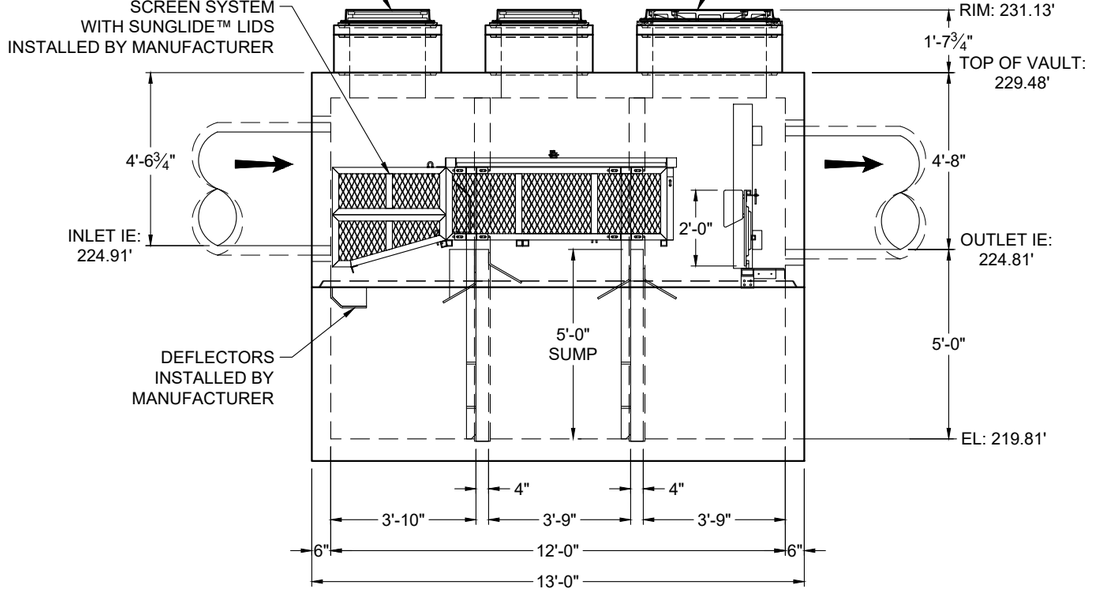


ELEVATION VIEW

NOTES:

1. DESIGN LOADINGS:
   A. AASHTO HS-20-44 (WITH IMPACT)
   B. DESIGN SOIL COVER: 5'-0" MAXIMUM
   C. ASSUMED WATER TABLE: BELOW BASE OF PRECAST (ENGINEER-OF-RECORD TO CONFIRM SITE WATER TABLE ELEVATION)
   D. LATERAL EARTH PRESSURE: 45 PCF (DRAINED)
   E. LATERAL LIVE LOAD SURCHARGE: 80 PSF (APPLIED TO 8'-0" BELOW GRADE)
   F. NO LATERAL SURCHARGE FROM ADJACENT BUILDINGS, WALLS, PIERS, OR FOUNDATIONS.
2. CONCRETE 28-DAY MINIMUM COMPRESSIVE STRENGTH: 5,000 PSI MINIMUM.
3. REINFORCING: REBAR, ASTM A615/A706, GRADE 60
4. CEMENT: ASTM C150
5. REQ'D ALLOWABLE SOIL BEARING CAPACITY: 2,500 PSF
6. REFERENCE STANDARD:
   A. ASTM C890
   B. ASTM C913
   C. ACI 318-14
7. THIS STRUCTURE IS DESIGNED TO THE PARAMETERS NOTED HEREIN. ENGINEER-OF-RECORD SHALL VERIFY THAT NOTED PARAMETERS MEET OR EXCEED PROJECT REQUIREMENTS. IF DESIGN PARAMETERS ARE INCORRECT, REVIEWING ENGINEER/AUTHORITY SHALL NOTIFY OLDCASTLE INFRASTRUCTURE UPON REVIEW OF THIS SUBMITTAL.
8. OVERSIZED HOLES TO ACCOMMODATE SPECIFIC PIPE TYPE MUST BE CONCENTRIC TO PIPE ID. AFTER PIPES ARE INSTALLED, ALL ANNULAR SPACES SHALL BE FILLED WITH A MINIMUM OF 3,000 PSI CONCRETE FOR FULL THICKNESS OF PRECAST WALLS. PIPES ARE TO BE FLUSH WITH THE INSIDE SURFACE OF THE CONCRETE STRUCTURE.
9. CONTRACTOR RESPONSIBLE TO VERIFY ALL SIZES, LOCATIONS, AND ELEVATIONS OF OPENINGS.
10. CONTRACTOR RESPONSIBLE TO ENSURE ADEQUATE BEARING SURFACE IS PROVIDED (I.E. COMPACTED AND LEVEL PER PROJECT SPECIFICATIONS).
11. SECTION HEIGHTS, SLAB/WALL THICKNESSES, AND KEYWAYS ARE SUBJECT TO CHANGE AS REQUIRED FOR SITE REQUIREMENTS AND/OR DUE TO PRODUCT AVAILABILITY AND PRODUCTION FACILITY CONSTRAINTS.
12. FOR SITE SPECIFIC DRAWINGS WITH DETAILED STRUCTURE DIMENSIONS AND WEIGHTS, PLEASE CONTACT OLDCASTLE INFRASTRUCTURE.
13. MAXIMUM PICK WEIGHT: 23,750 LBS. (* COMBINED WEIGHT INCLUDES BAFFLE WALLS AND PRODUCT INTERNALS.)
14. INTERNALS SHALL CONSIST OF A FLOATING SKIMMER, FLOW DEFLECTORS, ELEVATED CENTRAL SCREEN SYSTEM AND SLIDING LIDS. THESE COMPONENTS EFFECTIVELY REDUCE HEAD LOSS, INCREASE POLLUTANT REMOVAL AND SIMPLIFY MAINTENANCE.

- PRELIMINARY -
NOT FOR CONSTRUCTION

THIS PRODUCT IS PROTECTED BY ONE OR MORE OF THE FOLLOWING US PATENT(S): 6,428,692; 7,270,747; 7,981,283; 8,142,666; 8,366,923; 8,491,797; 7,846,327; 8,034,236; RELATED FOREIGN PATENTS, OR OTHER PATENTS PENDING.

Oldcastle Infrastructure™
A CRH COMPANY
Ph: 800.579.8819 | www.oldcastleinfrastructure.com/stormwater

THIS DOCUMENT IS THE PROPERTY OF OLDCASTLE INFRASTRUCTURE, INC. IT IS CONFIDENTIAL, SUBMITTED FOR REFERENCE PURPOSES ONLY AND SHALL NOT BE USED IN ANY WAY INJURIOUS TO THE INTERESTS OF, OR WITHOUT THE WRITTEN PERMISSION OF OLDCASTLE INFRASTRUCTURE, INC. COPYRIGHT © 2024 OLDCASTLE INFRASTRUCTURE, INC. ALL RIGHTS RESERVED.

Nutrient Separating Baffle Box®
NSBB-612

CUSTOMER: Bowman

PROJECT NAME: Ocean Breeze Ranch (OBR) - Bonsall, CA

| DATE | MFG | DRAWN | ENGINEER | CHECKED | SALES ORDER |
|---|---|---|---|---|---|
| 6/6/24 | 070-FO | PPS | HMF | HMF | - |

| SHEET NAME | REVISION | SHEET |
|---|---|---|
| 21-603205-NSBB-612_Basin 3D-1 | 1<br>REV DATE 10/28/24 | 1 OF 1 |

21-603205-NSBB-612_Basin 3D-1.dwg, 2024-10-28 5:34 PM, Akshata Savant 46 7468

# ONSITE ALTERNATIVE COMPLIANCE CALCULATIONS

**Automated Spreadsheet Calculation for Worksheet A.2: Biofiltration BMP Efficacy Factor Determination for Water Quality Equivalency (Version 1.0)**

| Category | # | Description | Value | Units | Notes |
|---|---|---|---|---|---|
| BMP Inputs | 0 | Effective Tributary Area | 434,402 | sq-ft | User Input (Tributary Runoff Coefficient x Tributary Area) |
| | 1 | Design Capture Volume Tributary to BMP | 8,165 | cubic-feet | User Input from BMPDM |
| | 2 | Provided BMP Surface Area | 11175 | sq-ft | User Input, must be ≥ 3% of Effective Tributary Area. |
| | 3 | Provided Surface Ponding Depth | 9 | inches | User Input |
| | 4 | Provided Soil Media Thickness | 21 | inches | User Input, 18 inches minimum |
| | 5 | Provided Gravel Storage Thickness | 15 | inches | User Input, use a value of zero if gravel does not cover entire bottom. |
| | 6 | Hydromodification Orifice Diameter of Underdrain | 2.0 | inches | User Input, Select n/a if no hydromodification flow control is provided |
| Biofiltration Calculations | 7 | Max Hydromod Flow Rate through Underdrain | 0.201 | CFS | If flow controls are provided, calculate per orifice equation below |
| | 8 | Max Soil Filtration Rate Allowed by Underdrain Orifice | 0.78 | in/hr | If flow controls are provided, calculate as [(Line 7 x 12 x 3600)/Line 2] |
| | 9 | Soil Media Filtration Rate | 5.00 | in/hr | Default = 5.00 |
| | 10 | Soil Media Filtration Rate to be used for Sizing | 0.78 | in/hr | Minimum of Line 8 or Line 9 |
| | 11 | Depth Biofiltered Over 6 Hour Storm | 4.67 | inches | [Line 10 x 6 Hours] |
| | 12 | Soil Media Pore Space | 0.30 | - | Default = 0.30 for Biofiltration-Only BMPs |
| | 13 | Gravel Pore Space | 0.40 | - | Default = 0.40 |
| | 14 | Effective Depth of Biofiltration Storage | 21.3 | inches | [Line 3 + (Line 4 x Line 12) + (Line 5 x Line 13)] |
| | 15 | Drawdown Time for Surface Ponding | 12 | hours | [Line 3 / Line 10] |
| | 16 | Drawdown Time for Entire Biofiltration Basin | 27 | hours | [Line 14 / Line 10] |
| | 17 | Total Depth Biofiltered | 25.97 | inches | [Line 11 + Line 14] |
| | 18 | Option 1 - Biofilter 1.50 DCV: Target Volume | 12,248 | cubic-feet | [1.50 x Line 1] |
| | 19 | Option 1 - Provided Biofiltration Volume | 12,248 | cubic-feet | [Minimum of Line 18 or [(Line 17/12) x Line 2]] |
| | 20 | Option 2 - Store 0.75 DCV: Target Volume | 6,124 | cubic-feet | [0.75 x Line 1] |
| | 21 | Option 2 - Provided Storage Volume | 6,124 | cubic-feet | [Minimum of Line 20 or [(Line 14/12) x Line 2]] |
| | 22 | Provided Capture for Biofiltration BMP | 1.50 | ratio | [Maximum of (1.50 x Line 19/Line 18) or (1.50 x Line 21/Line 20)] |
| | 23 | **Biofiltration BMP Efficacy Factor for Use in WQE Formula** | 1.00 | ratio | [Line 22 x 0.666] |

**Illustration of Biofiltration Characteristics**

| | |
|---|---|
| Surface Ponding Depth | 9.00 in. |
| Surface Ponding Volume | 8,381 cf |
| Soil Media Thickness | 21.00 in. |
| Soil Storage Volume | 5,867 cf |
| Gravel Storage Thickness | 15.00 in. |
| Gravel Storage Volume | 5,588 cf |
| **Opt 1. Volume Biofiltered** | **12,248 cf** |
| **Opt 2. Volume Stored** | **6,124 cf** |

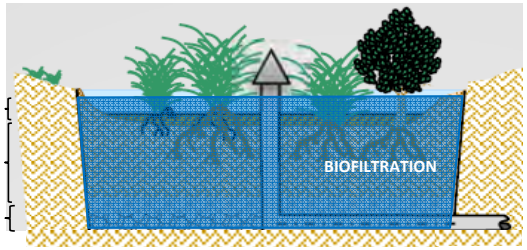


**Notes:**

1. Applicants must provide user input for yellow shaded cells. Values for all other cells will be automatically generated.
2. Refer to **Section 2.3.1.3** of the guidance document for additional discussion of BMP Efficacy Factors.
3. Orifice Equation: $Q = CA\sqrt{2gh}$

   Where Q: Flow Rate (cfs), C: Discharge Coefficient (0.60), A: Area of Orifice Opening ($ft^2$), g: acceleration of gravity ($ft/s^2$), and h: head difference across orifice (ft)

**Automated Spreadsheet Calculation for Worksheet A.5: Land Use Factor Determination (Version 1.0)**

| Land Use Designation | ACP Tributary Characteristics | | Reference Tributary Characteristics [2] | | Relative Pollutant Concentrations by Land Use [3] | | | | | | |
|---|---|---|---|---|---|---|---|---|---|---|---|
| | Area (Acres) | Runoff Factor [1] | Area (Acres) | Runoff Factor [1] | TSS | TP | TN | TCu | TPb | TZn | FC |
| Agriculture | | 0.10 | | 0.10 | 0.45 | 1.00 | 1.00 | 1.00 | 1.00 | 0.59 | 1.00 |
| Commercial | | 0.80 | | 0.80 | 0.13 | 0.16 | 0.16 | 0.56 | 0.48 | 1.00 | 0.87 |
| Education | | 0.50 | | 0.50 | 0.13 | 0.20 | 0.11 | 0.14 | 0.25 | 0.39 | 0.13 |
| Industrial | | 0.90 | | 0.90 | 0.13 | 0.19 | 0.15 | 0.54 | 0.68 | 0.89 | 0.49 |
| Multi Family Residential | | 0.60 | | 0.60 | 0.10 | 0.13 | 0.13 | 0.14 | 0.15 | 0.29 | 0.27 |
| Orchard | | 0.10 | | 0.10 | 0.18 | 0.17 | 0.67 | 1.00 | 1.00 | 0.59 | 0.11 |
| Rural Residential | 2.39 | 0.30 | | 0.30 | 1.00 | 0.51 | 0.14 | 0.10 | 0.71 | 0.13 | 0.19 |
| Single Family Residential | | 0.40 | | 0.40 | 0.13 | 0.20 | 0.15 | 0.27 | 0.43 | 0.35 | 0.63 |
| Transportation | 0.71 | 0.90 | 3.12 | 0.90 | 0.11 | 0.26 | 0.12 | 0.53 | 0.31 | 0.62 | 0.12 |
| Vacant / Open Space | 7.98 | 0.10 | 0.40 | 0.19 | 0.16 | 0.10 | 0.10 | 0.12 | 0.10 | 0.10 | 0.10 |
| Water | | 0.00 | | 0.00 | 0.00 | 0.00 | 0.00 | 0.00 | 0.00 | 0.00 | 0.00 |
| Total | 11.08 | - | 3.52 | - | - | - | - | - | - | - | - |
| Relative Pollutant Concentration for ACP Tributary [4] | | | | | 0.42 | 0.28 | 0.12 | 0.23 | 0.37 | 0.26 | 0.14 |
| Relative Pollutant Concentration for Reference Tributary [4] | | | | | 0.11 | 0.26 | 0.12 | 0.52 | 0.30 | 0.61 | 0.12 |
| Watershed Management Area | | | | | San Luis Rey | | | | | | |
| Hydrologic Unit | | | | | San Luis Rey (903.00) | | | | | | |
| Land Use Factor [5] | | | | | - | 1.11 | 1.00 | - | - | - | 1.14 |

*Effective area composition graphics are for illustrative purposes only.*

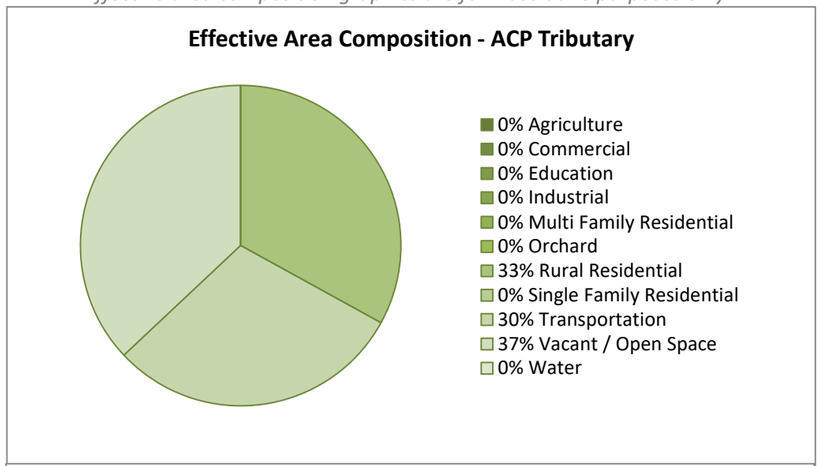


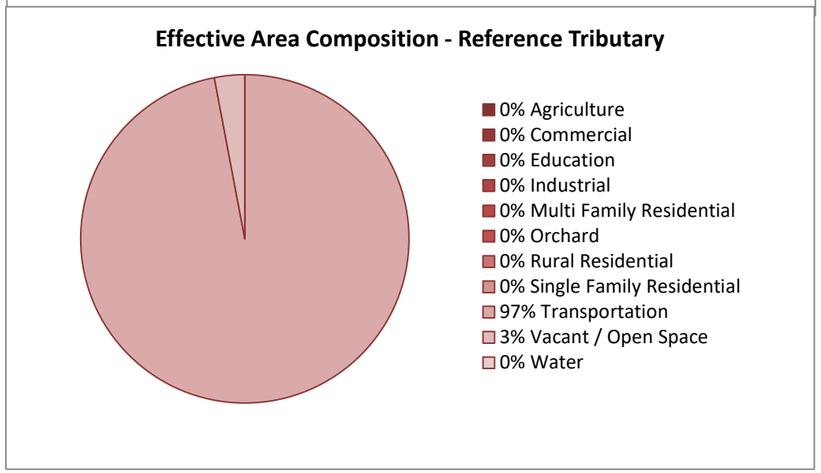


**Notes:**

* Applicants must provide user input for yellow shaded cells. Values for all other cells will be automatically generated.

1. Revisions to default runoff factors must be supported to the satisfaction of the applicable Copermittee.
2. Applicant-Implemented ACPs must identify reference tributary characteristics that are representative of their specific PDP. Independent ACPs must reference **Table 2-3** for appropriate area and runoff factor information applicable to their watershed management area.
3. Relative Pollutant Concentrations by Land Use have been identified through examination of available EMC data. Additional information on how these relative concentrations were developed is provided in **Appendix B**.
4. Relative Pollutant Concentrations for ACP and Reference Tributaries are calculated for each WQE Pollutant of Concern per **Equation 2-2**.
5. Calculate the Land Use Factor for each priority pollutant by dividing the Relative Pollutant Concentration for the ACP Tributary by the Relative Pollutant Concentration for the Reference Tributary. Land Use Factors may never be lower than 0.10 and may never exceed 10.0.

**Example:** An ACP Tributary with 5.25 acres of Commercial, 1.63 Acres of Education, and 2.65 acres of Transportation land uses produces a relative pollutant concentration 0.12 for Total Suspended Solids (assumes default runoff factors are applied).

Equation 2-2:

$$P_1 = \frac{\sum P_{1a}A_aC_a + P_{1b}A_bC_b + \ldots\ldots P_{1k}A_kC_k}{\sum A_aC_a + A_bC_b + \ldots\ldots A_kC_k}$$

Equation 2-2 Applied to Example:

$$P_{TSS} = \frac{(0.13x5.25x0.80) + (0.13x1.63x0.50) + (0.11x2.65x0.90)}{(5.25x0.80) + (1.63x0.50) + (2.65x0.90)} = 0.12$$

## Automated Worksheet B.1: Calculation of Design Capture Volume (V2.0)

| Category | # | Description | *i* | *ii* | *iii* | *iv* | *v* | *vi* | *vii* | *viii* | *ix* | *x* | Units |
|---|---|---|---|---|---|---|---|---|---|---|---|---|---|
| Standard Drainage Basin Inputs | 1 | Drainage Basin ID or Name | REFERENCE TRIBUTARY | ACP TRIBUTARY | | | | | | | | | unitless |
| | 2 | 85th Percentile 24-hr Storm Depth | 0.70 | 0.70 | | | | | | | | | inches |
| | 3 | Impervious Surfaces Not Directed to Dispersion Area (C=0.90) | 136,128 | 57,913 | | | | | | | | | sq-ft |
| | 4 | Semi-Pervious Surfaces Not Serving as Dispersion Area (C=0.30) | 17,638 | 7,054 | | | | | | | | | sq-ft |
| | 5 | Engineered Pervious Surfaces Not Serving as Dispersion Area (C=0.10) | | 9,052 | | | | | | | | | sq-ft |
| | 6 | Natural Type A Soil Not Serving as Dispersion Area (C=0.10) | | | | | | | | | | | sq-ft |
| | 7 | Natural Type B Soil Not Serving as Dispersion Area (C=0.14) | | 249,061 | | | | | | | | | sq-ft |
| | 8 | Natural Type C Soil Not Serving as Dispersion Area (C=0.23) | | | | | | | | | | | sq-ft |
| | 9 | Natural Type D Soil Not Serving as Dispersion Area (C=0.30) | | 159,589 | | | | | | | | | sq-ft |
| Dispersion Area, Tree Well & Rain Barrel Inputs (Optional) | 10 | Does Tributary Incorporate Dispersion, Tree Wells, and/or Rain Barrels? | | | | | | | | | | | yes/no |
| | 11 | Impervious Surfaces **Directed to Dispersion Area** per SD-B (Ci=0.90) | | | | | | | | | | | sq-ft |
| | 12 | Semi-Pervious Surfaces **Serving as Dispersion Area** per SD-B (Ci=0.30) | | | | | | | | | | | sq-ft |
| | 13 | Engineered Pervious Surfaces **Serving as Dispersion Area** per SD-B (Ci=0.10) | | | | | | | | | | | sq-ft |
| | 14 | Natural Type A Soil **Serving as Dispersion Area** per SD-B (Ci=0.10) | | | | | | | | | | | sq-ft |
| | 15 | Natural Type B Soil **Serving as Dispersion Area** per SD-B (Ci=0.14) | | | | | | | | | | | sq-ft |
| | 16 | Natural Type C Soil **Serving as Dispersion Area** per SD-B (Ci=0.23) | | | | | | | | | | | sq-ft |
| | 17 | Natural Type D Soil **Serving as Dispersion Area** per SD-B (Ci=0.30) | | | | | | | | | | | sq-ft |
| | 18 | Number of Tree Wells Proposed per SD-A | | | | | | | | | | | # |
| | 19 | Average Mature Tree Canopy Diameter | | | | | | | | | | | ft |
| | 20 | Number of Rain Barrels Proposed per SD-E | | | | | | | | | | | # |
| | 21 | Average Rain Barrel Size | | | | | | | | | | | gal |
| Initial Runoff Factor Calculation | 22 | Total Tributary Area | 153,766 | 482,669 | 0 | 0 | 0 | 0 | 0 | 0 | 0 | 0 | sq-ft |
| | 23 | Initial Runoff Factor for Standard Drainage Areas | 0.83 | 0.29 | 0.00 | 0.00 | 0.00 | 0.00 | 0.00 | 0.00 | 0.00 | 0.00 | unitless |
| | 24 | Initial Runoff Factor for Dispersed & Dispersion Areas | 0.00 | 0.00 | 0.00 | 0.00 | 0.00 | 0.00 | 0.00 | 0.00 | 0.00 | 0.00 | unitless |
| | 25 | Initial Weighted Runoff Factor | 0.83 | 0.29 | 0.00 | 0.00 | 0.00 | 0.00 | 0.00 | 0.00 | 0.00 | 0.00 | unitless |
| | 26 | Initial Design Capture Volume | 7,445 | 8,165 | 0 | 0 | 0 | 0 | 0 | 0 | 0 | 0 | cubic-feet |
| Dispersion Area Adjustments | 27 | Total Impervious Area Dispersed to Pervious Surface | 0 | 0 | 0 | 0 | 0 | 0 | 0 | 0 | 0 | 0 | sq-ft |
| | 28 | Total Pervious Dispersion Area | 0 | 0 | 0 | 0 | 0 | 0 | 0 | 0 | 0 | 0 | sq-ft |
| | 29 | Ratio of Dispersed Impervious Area to Pervious Dispersion Area | n/a | n/a | n/a | n/a | n/a | n/a | n/a | n/a | n/a | n/a | ratio |
| | 30 | Adjustment Factor for Dispersed & Dispersion Areas | 1.00 | 1.00 | 1.00 | 1.00 | 1.00 | 1.00 | 1.00 | 1.00 | 1.00 | 1.00 | ratio |
| | 31 | Runoff Factor After Dispersion Techniques | 0.83 | 0.29 | n/a | n/a | n/a | n/a | n/a | n/a | n/a | n/a | unitless |
| | 32 | Design Capture Volume After Dispersion Techniques | 7,445 | 8,165 | 0 | 0 | 0 | 0 | 0 | 0 | 0 | 0 | cubic-feet |
| Tree & Barrel Adjustments | 33 | Total Tree Well Volume Reduction | 0 | 0 | 0 | 0 | 0 | 0 | 0 | 0 | 0 | 0 | cubic-feet |
| | 34 | Total Rain Barrel Volume Reduction | 0 | 0 | 0 | 0 | 0 | 0 | 0 | 0 | 0 | 0 | cubic-feet |
| Results | 35 | Final Adjusted Runoff Factor | 0.83 | 0.29 | 0.00 | 0.00 | 0.00 | 0.00 | 0.00 | 0.00 | 0.00 | 0.00 | unitless |
| | 36 | Final Effective Tributary Area | 127,626 | 139,974 | 0 | 0 | 0 | 0 | 0 | 0 | 0 | 0 | sq-ft |
| | 37 | Initial Design Capture Volume Retained by Site Design Elements | 0 | 0 | 0 | 0 | 0 | 0 | 0 | 0 | 0 | 0 | cubic-feet |
| | 38 | Final Design Capture Volume Tributary to BMP | 7,445 | 8,165 | 0 | 0 | 0 | 0 | 0 | 0 | 0 | 0 | cubic-feet |

**No Warning Messages**

TOTAL PROPOSED UNTREATED DCV

IMPACTED DCV (V1) =MITIGATED DCV (V2) SINCE RUNOFF COEFFICIENTS REMAIN UNCHANGED IN PROPOSED CONDITIONS WITH PROPOSED BMP

| | | | | |
|---|---|---|---|---|
| Untreated DCV from "required area" | | = | 7445 | CF |
| & Remaining untreated DCV from SDD BMP | | + | 426 | CF |
| | | | **7871** | **CF** |
| Impacted DCV (V1)= | 8165 | CF | (DCV prior to construction of pollution control BMP) | |
| Mitigated DCV (V2)= | 8165 | CF | (V2=V1 since runoff coefficients remain unchanged with proposed BMP) | |
| Change in DCV (Vchange) = | 0 | CF | | |

| | | | |
|---|---|---|---|
| ACP Tributary = | 11.08 | acres | Refer to Worksheet A.5 |
| Reference Tributary = | 3.52 | acres | |
| L (Land Use Factor) = | 1.00 | | |

| | | |
|---|---|---|
| Impacted BMP Efficacy Factor (B1) = | 0 | (since it doesn't have an existing BMP) |
| Mitigated BMP Efficacy Factor (B2)= | 1 | (Per Worksheet A.1) |

ACP Earned Stormwater Pollutant Control Volume:

VE = L (Vchange + V2B2 - V1B1)
VE = 1.03 ( 0 + (7212*1) - (7212*0))
VE = 8165 CF (ACP water quality benefits)

| | | |
|---|---|---|
| 8165 | > | 7871 |

## LEGEND

- DRAINAGE MANAGEMENT AREA
- ALTERNATIVE COMPLIANCE EXCESS AREA TREATED BY POLLUTION CONTROL BMP: 11.08 AC
- BIOFILTRATION BASIN BMP HATCH
- PROPOSED AREA NOT TRIBUTARY TO PROPOSED BMP (TRANSPORTATION: 3.12 AC)
- PROPOSED AREA NOT TRIBUTARY TO PROPOSED BMP (LANDSCAPING/OPEN SPACE/DG: 0.40 AC)
- REFERENCE TRIBUTARY AREA/DISTURBED AREA NOT TRIBUTARY TO PROPOSED BMP: 3.52 AC

N

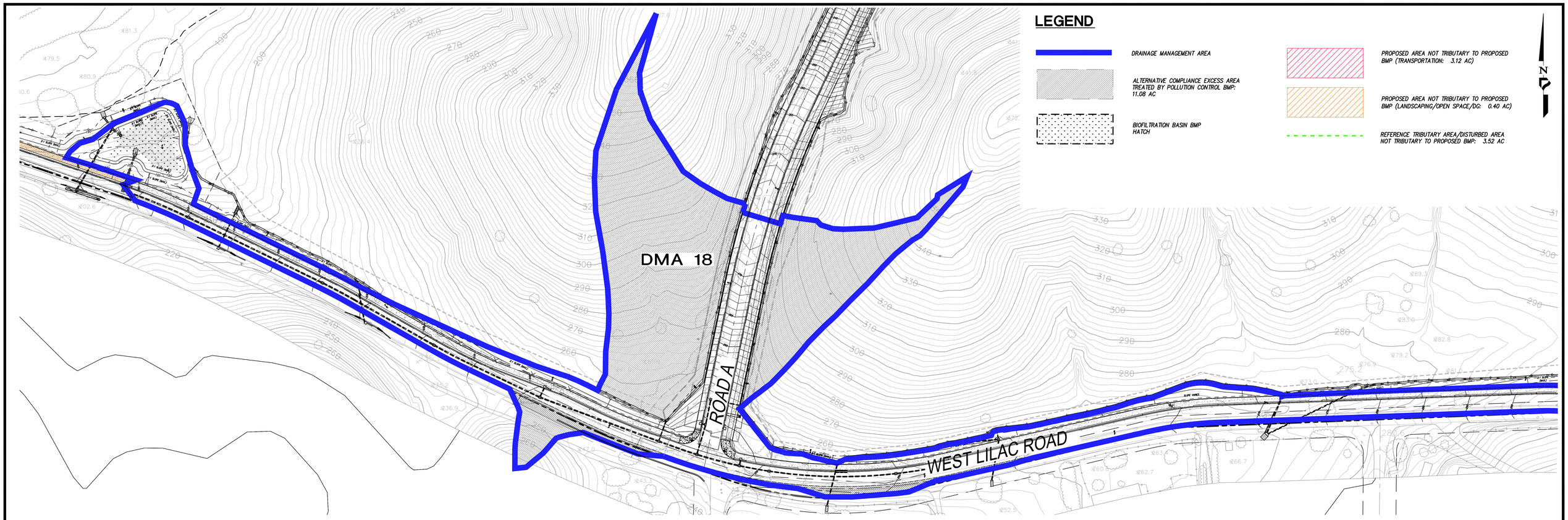


## DMA 18 - ACP TRIBUTARY

1" = 60'

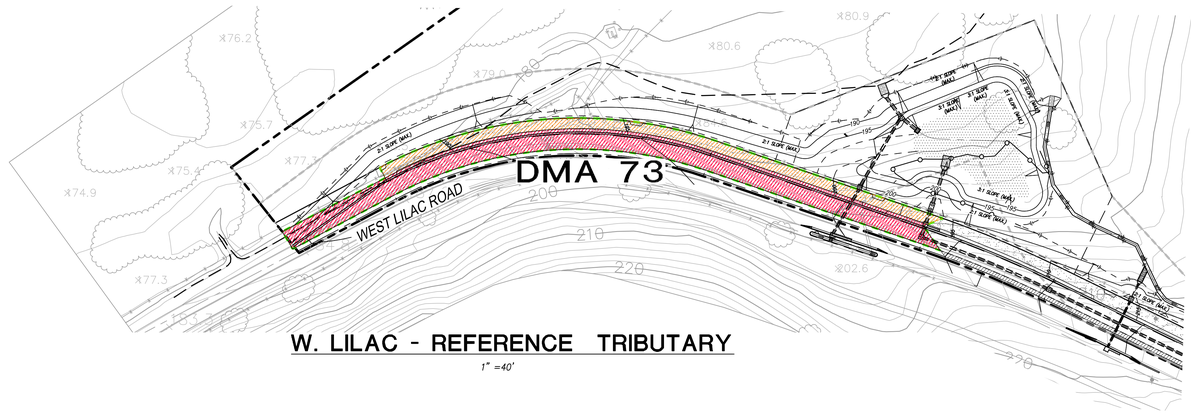


## W. LILAC - REFERENCE TRIBUTARY

1" =40'

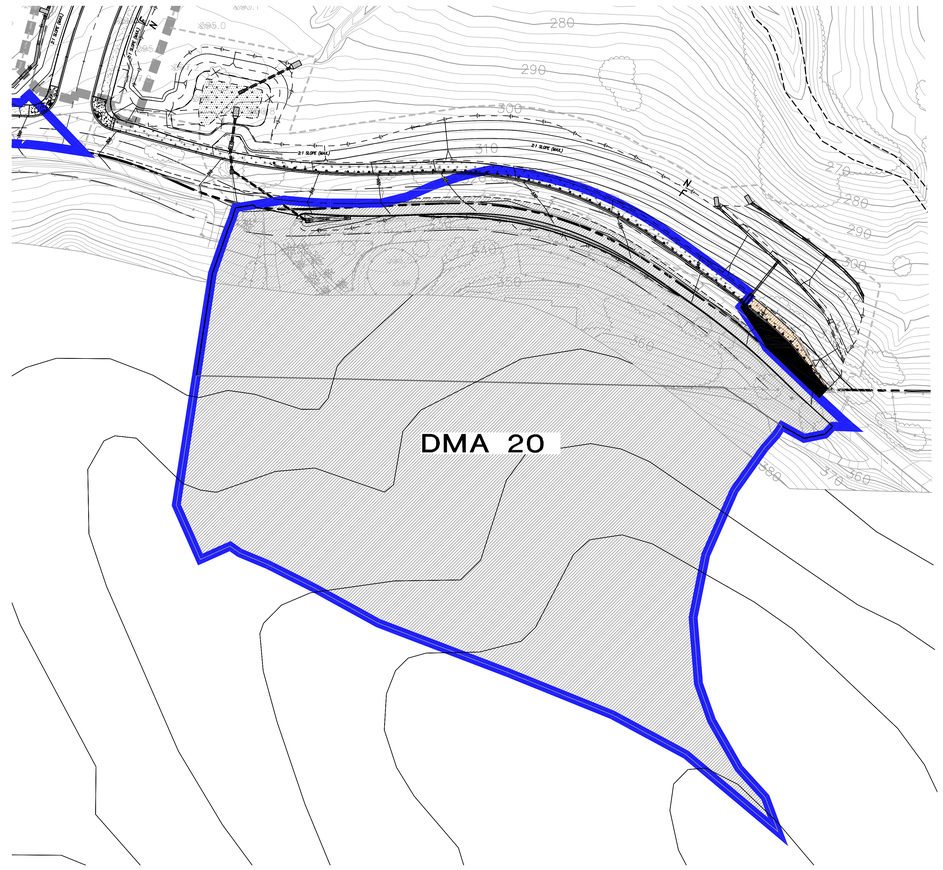


## DMA 20 - ACP TRIBUTARY

1" = 60'

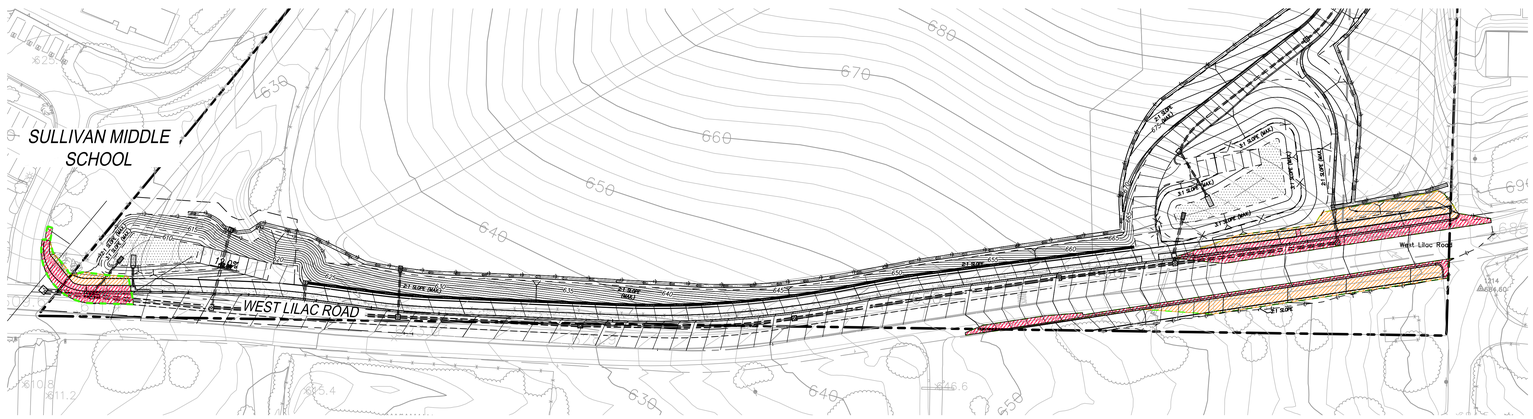


## W. LILAC - REFERENCE TRIBUTARY

1" = 50'

| | | |
|---|---|---|
| JOB #: 4192.10<br>CREATED: 7/23/19 | PREPARED BY:<br>PROJECT DESIGN CONSULTANTS<br>Planning \| Landscape Architecture \| Engineering \| Survey<br>701 B Street, Suite 800<br>San Diego, CA 92101<br>619.235.6471 Tel<br>619.234.0349 Fax | COUNTY OF SAN DIEGO<br>OCEAN BREEZE RANCH<br>SWQMP ATTACHMENT 1A<br>ONSITE ALTERNATIVE COMPLIANCE EXHIBIT (1 OF 3) |

Last save by JEFF NOVOA, File Name Q:\CA-SAND-PD\Projects\4192.10\Engr\Reports\SWQMP-FE\ATTACHMENTS\A7- DOCUMENTATION OF DMAs WITH STRUCTURAL POLLUTANT CONTROL BMPs\ACP\4192.10 ALT COMP.dwg, Date Last Saved 10/30/2024 11:45:48 AM, Date Plotted Last 10/30/2024 11:47:46 AM

## LEGEND

- DRAINAGE MANAGEMENT AREA
- ALTERNATIVE COMPLIANCE EXCESS AREA TREATED BY POLLUTION CONTROL BMP: 11.08 AC
- BIOFILTRATION BASIN BMP HATCH
- PROPOSED AREA NOT TRIBUTARY TO PROPOSED BMP (TRANSPORTATION: 3.12 AC)
- PROPOSED AREA NOT TRIBUTARY TO PROPOSED BMP (LANDSCAPING/OPEN SPACE/DG: 0.40 AC)
- REFERENCE TRIBUTARY AREA/DISTURBED AREA NOT TRIBUTARY TO PROPOSED BMP: 3.52 AC

N

MATCH LINE SEE BELOW

## EQUESTRIAN ROAD - REFERENCE TRIBUTARY

1" = 60'

MATCH LINE SEE ABOVE

MATCH LINE SEE SHEET 3

## EQUESTRIAN ROAD - REFERENCE TRIBUTARY

1" = 60'

JOB #: 4192.10

CREATED: 7/23/19

PREPARED BY:

PROJECT DESIGN CONSULTANTS
Planning | Landscape Architecture | Engineering | Survey

701 B Street, Suite 800
San Diego, CA 92101
619.236.6471 Tel
619.234.5349 Fax

**COUNTY OF SAN DIEGO**

**OCEAN BREEZE RANCH**

*SWQMP ATTACHMENT 1A*
*ONSITE ALTERNATIVE COMPLIANCE*
*EXHIBIT (2 OF 3)*

*Last save by JEFF NOVOA, File Name Q:\CA-SAND-PD\Projects\4192.10\Engr\Reports\SWQMP-FE\ATTACHMENTS\A7- DOCUMENTATION OF DMAs WITH STRUCTURAL POLLUTANT CONTROL BMPs\ACP\4192.10 ALT COMP.dwg, Date Last Saved 10/30/2024 11:45:48 AM, Date Plotted Last 10/30/2024 11:52:36 AM*

## LEGEND

- DRAINAGE MANAGEMENT AREA
- ALTERNATIVE COMPLIANCE EXCESS AREA TREATED BY POLLUTION CONTROL BMP: 11.08 AC
- BIOFILTRATION BASIN BMP HATCH
- PROPOSED AREA NOT TRIBUTARY TO PROPOSED BMP (TRANSPORTATION: 3.12 AC)
- PROPOSED AREA NOT TRIBUTARY TO PROPOSED BMP (LANDSCAPING/OPEN SPACE/DG: 0.40 AC)
- REFERENCE TRIBUTARY AREA/DISTURBED AREA NOT TRIBUTARY TO PROPOSED BMP: 3.52 AC

N

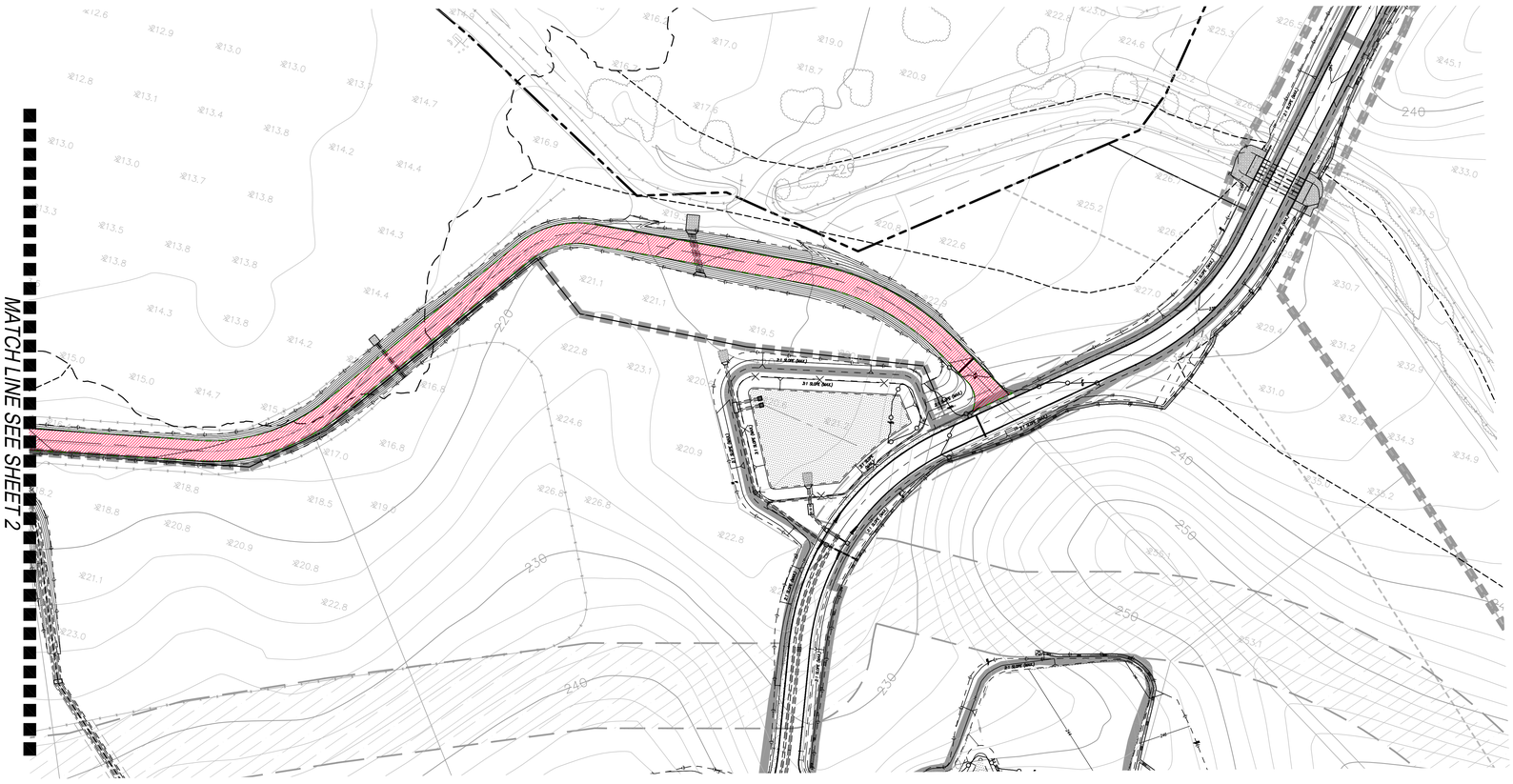


## EQUESTRIAN ROAD - REFERENCE TRIBUTARY

1" = 60'

| | | |
|---|---|---|
| JOB #: 4192.10<br>CREATED: 7/23/19 | PREPARED BY:<br>PROJECT DESIGN CONSULTANTS<br>Planning I Landscape Architecture I Engineering I Survey<br>701 B Street, Suite 800<br>San Diego, CA 92101<br>619.235.6471 Tel<br>619.234.0349 Fax | COUNTY OF SAN DIEGO<br>OCEAN BREEZE RANCH<br>SWQMP ATTACHMENT 1A<br>ONSITE ALTERNATIVE COMPLIANCE EXHIBIT (3 OF 3) |

## 8.0 General Requirements

- Completion of this attachment is required for all PDPs subject to hydromodification management requirements (see PDP SWQMP Form Table 5). Do not submit this attachment if exempt from Hydromodification Management requirements. Document the PDP exemption in Attachment 9.
- Submit this cover page and all required Sub-attachments for all structural hydromodification management BMPs proposed for the project.
- Constructed features must fully satisfy the requirements described in applicable BMPDM sections and appendices, and any other guidance identified by the County.
- DMA Exhibits and Construction Plans: DMAs, features, and BMPs identified and described in this attachment must be shown on DMA Exhibits and all applicable construction plans submitted for the project. See Attachment 2 for additional instruction on exhibits and plans.
- Structural BMP Certification. All structural hydromodification management BMPs documented this attachment must be certified by a registered engineer in Attachment 7, Sub-attachment 7.1.
- Structural BMP Verification. BMP installation must be verified by the County at the completion of construction. Applicants must complete an Installation Verification Form (Attachment 10).

| **Sub-attachments** (check all that are completed) |
|---|
| ☒ **8.1: Flow Control Facility Design** (required)[1]<br>Submit using ☒ the Sub-attachment 8.1 cover sheet provided, or ☐ as a separate stand-alone document labeled Sub-attachment 8.1. |
| ☒ **8.2: Hydromodification Management Points of Compliance** (required)<br>Complete the table provided in Sub-attachment 8.2. |
| **8.3: Geomorphic Assessment of Receiving Channels**<br>1. Has a geomorphic assessment been performed for the receiving channel(s)?<br>☐ No, the low flow threshold is 0.1Q2 (default low flow threshold) |
| ☒ Yes (provide the information below):<br>Low flow threshold: ☒ 0.1Q2 ☐ 0.3Q2 ☒ 0.5Q2 |
| Title: Hydromodification Screening for Ocean Breeze Ranch<br><br>Date: June 5, 2024 Preparer: Chang Consultants |
| Submit using ☒ the Sub-attachment 8.3 cover sheet provided, or ☐ as a separate stand-alone document labeled Sub-attachment 8.3. |
| **8.4: Vector Control Plan** (required if BMPs will not drain in less than 96 hours)<br>☐ Included with this attachment ☒ Not required |

[1] Including Structural BMP Drawdown Calculations and Overflow Design Summary. See BMPDM Chapter 6 and Appendix G for additional design guidance.

## 8.1 Flow Control Facility Design

Insert Flow Control Facility Design behind this cover page or submit as a separate stand-alone document labeled Sub-attachment 8.1.

# Final Hydromodification Management Study

**Ocean Breeze Ranch**
**Tentative Map Tract No. 5615**
**PDS #2020-LDGRMJ-30295**

**County of San Diego, CA**
**October 31st, 2024**

**Prepared for:**
**Ocean Breeze Farms, LLC**
**1550 S. Coast Highway, Suite 201**
**Laguna Beach, CA 92651**

**Prepared By:**

PROJECT DESIGN CONSULTANTS
a Bowman company

701 B Street, Suite 800
San Diego, CA 92101
619.235.6471

PDC Job: 4192.10




Prepared by: J.Novoa, PE
*Under the supervision of*

_____

Chelisa Pack, PE RCE 71026
Registration Expires 06/30/25

## Introduction

This report summarizes the effort to design the hydromodification control measures for the proposed stormwater management basins in the Ocean Breeze Ranch development. The existing and post-developed or proposed conditions were modeled in PCSWMM to determine the orifice configurations that would ensure compliance with the hydromodification management requirements for Priority Development Projects according to the County Model BMP Design Manual.

## Hydromodification Modeling Overview

The Ocean Breeze Ranch project will consist of multiple single-family housing tracts as well as estate lots spread out over a 1402.5 ac property in Bonsall, CA. Presently the site is utilized as a horse ranch and for agricultural production, and while these uses will be maintained to some degree, significant imperviousness will be added. Twenty-two basins have been designed to manage the associated increase in runoff with fourteen of them serving as combined water quality, hydromodification, and peak-flow detention controls, with nine discharging to a hydromodification exempt location.

### Model Description

PCSWMM is a proprietary software which utilizes the EPA's Stormwater Management Model (SWMM) as its computational engine while providing added processing and analytical capabilities to streamline design. PCSWMM is a user-friendly shell for SWMM that allows efficient development of SWMM models.

PCSWMM was used for this study based on the ability to batch create, edit and compare models, perform detention routing with the same software, and moreover, due to the tendency for SWMM to produce results that have been found to more accurately represent San Diego area watersheds than the alternative San Diego Hydrology Model (SDHM).

SWMM is a semi-distributed hydrologic and hydraulic modeling software that simulates the rainfall-runoff response of a watershed based on linear-reservoir overland flow routing. This overland flow routine considers the connectedness of pervious, impervious and Low Impact Development (LID) BMP coverage to the drainage system. The outflow from these watersheds is translated into the hydraulic component of the model that utilizes energy and momentum principles to determine flow through conduits, orifices and other structures. The hydraulics may be computed based on either the kinematic or dynamic-wave equations. In this study the latter was used because there was no need to take downstream hydraulic grade line effects into consideration.

### Hydromodification Criteria

The San Diego Regional Water Quality Control Board (SDRWQCB) requires the exceedance duration of post-developed flow rates be maintained to within 10% of the pre-developed flow durations. This must occur for flow frequencies ranging from a fraction of the 2-year flow (Q2) to the 10-year flow (Q10). These flow frequency values may be calculated directly from SWMM statistics or estimated based on accepted USGS regression equations. These equations estimate flows based on a correlation with watershed area and the mean annual rainfall developed for the region.

The fraction of the Q2 that must be controlled is dependent on the relative erodibility of the channel being discharged to, categorized as either High, Medium, or Low susceptibility. By default, it is assumed that all channels have a High susceptibility, and that therefore 0.1 of the Q2 must be controlled. A Geomorphic

Assessment of Receiving Channels (GARC) may be performed to indicate whether the channel erosion susceptibility can be categorized as Medium or Low, allowing control to 0.3 or 0.5 of the Q2, respectively.

The table below lists all the stormwater basins with the associated point of compliance (POC) and the range of flows to be controlled, depending on if a GARC was performed and whether the USGS equations of SWMM statistics were used to calculate the flow frequencies.

**Table 1 – Hydromodification Flows**

| Chang SCCWRP Analysis | PDC POC ID | Pre-Project Drainage Area (ac) | GARC Results | Q2 Fraction | USGS/ SWMM | Pre-Project Q2 (cfs) | Pre-Project Low Flow Threshold (cfs) | Pre-Project Q10 (cfs) |
|---|---|---|---|---|---|---|---|---|
| YES | 1A | 39.9 | LOW | 0.5 | SWMM | 14.66 | 7.33 | 25.24 |
| | 1B | 7.90 | | 0.1 | SWMM | 2.70 | 0.27 | 5.33 |
| | 1 | | HYDROMOD EXEMPT - DISCHARGE BELOW 10 YR WSE | | | | | |
| | 2H | | HYDROMOD EXEMPT - DISCHARGE BELOW 100 YR WSE | | | | | |
| | 3A | 3.04 | - | 0.1 | SWMM | 1.5 | 0.15 | 2.51 |
| | 3B | 1.21 | - | 0.1 | SWMM | 0.76 | 0.08 | 1.19 |
| | 3C | 8.85 | HIGH | 0.1 | SWMM | 2.91 | 0.29 | 5.19 |
| | 3D | 38.98 | - | 0.1 | SWMM | 10.87 | 1.09 | 20.62 |
| | 3E | 1.45 | - | 0.1 | SWMM | 0.60 | 0.06 | 1.05 |
| | 3F | 7.54 | - | 0.1 | SWMM | 4.34 | 0.43 | 6.80 |
| | 3G | 2.15 | - | 0.1 | SWMM | 0.98 | 0.10 | 1.68 |
| Yes | 3H | 22.52 | Low | 0.5 | SWMM | 8.13 | 4.07 | 14.47 |
| | 3J | 4.89 | | 0.1 | SWMM | 3.06 | 0.31 | 4.74 |
| | EQ | 375.94 | | 0.1 | SWMM | 104.36 | 10.44 | 192.10 |

## Model Development

The inputs required for a SWMM model include rainfall, evapotranspiration rates, watershed characteristics and BMP configurations. For this study the Fallbrook Gage from the Project Clean Water website and the daily evapotranspiration rates from Table G.1-1 in the BMP Design Manual, based on the project location within Zone 6 of the California Irrigation management Information System "Reference Evapotranspiration Zones," were utilized.

Watershed boundaries were delineated based on the existing and proposed models. Some models included runon area and some areas of diversion were not included in the pre-condition and added in the post condition due to grading. Some watershed boundaries located in Planning Area 3 were delineated based on post-developed conditions for both existing and proposed models to ensure a 1:1 comparison between pre-project and post-project conditions for certain POCs. Due the proposed Dulin Road being situated perpendicular to the sheet flow from the hillsides there was no real concentrated point of compliance, so the post condition was utilized in those scenarios. In some cases, the pre-developed basins were split to distinguish between pre-developed slope conditions. Watershed characteristics were assigned appropriate parameter values according to the San Diego County BMP Design Manual and the EPA's SWMM User's

Manual Version 5.1. The N-pervious parameters varied per DMA and values were taken from Table G.1-4 of the County BMP Design Manual and the Supplemental Handout #2. Some DMAs had different N-pervious values found in the Supplemental Handout #2 that were more aligned with the DMA characteristics including poor grass, rough impervious surface, and others. A portion of the north section of Area 1A and 3H does not drain to the POC in the predeveloped conditions, but is being redirected in the proposed condition. This area was not modeled in the predeveloped conditions, but was added in the post condition to show compliance to POC 1A and POC 3H.

The percent imperviousness was calculated based on the known road, landscape, and land use coverages in the site plan to develop the same values used to calculate the Design Capture Volume provided in Attachment 7 of the Storm Water Quality Management Plan (SWQMP). As the site includes all four hydrologic soil groups as well as many different land covers, composite values for the Green-Ampt infiltration parameters, depression storage and overland flow roughness coefficient were calculated based on the soil groups. Attachment 2 of this report provides the calculated parameters for each sub-catchment and the model schematic for both pre and proposed conditions.

### POC 2H Exemption

POC 2H will be HMP exemption with a outfall discharge below the 100 year floodplain water surface elevation. Due to the lot constraints and adjacent BIO-OPEN Space which we were unable to grade in, the outfall was unable to discharge below the 10-year floodplain WSEL similar to POC 1. A WSPG hydraulic model was developed to show non erosive velocities with 10-year flows existing the rip rap pad. The velocities are below 5 fps and will not have a potential for erosion.

## Stormwater Basin Modeling for Hydromodification Compliance

Twenty stormwater basins were sited and conservatively sized to manage water quality and peak flow requirements within the Ocean Breeze Ranch project. Fourteen of these discharge to a point of compliance (POC) requiring hydromodification management as well, and these basins were modelled continuously to ensure compliance could be met. The Status Report SWMM output file for the existing condition is provided in Attachment 3 and the proposed condition is provided in Attachment 4. Onsite alternative compliance was included in this project for small areas of proposed imperviousness due to road. Basin 3H accounted for bypass areas as pervious in the pre-project condition and impervious in the post condition. They are directly tied into the POC and not routed to the basins. See schematic in Attachment 2. POC EQ represents the tributary area to Equestrian Road. This model utilized zero impervious for the area tributary to the Equestrian Road in the pre and post condition (as a conservative assumption) and in the post conditions the 100% impervious Equestrian Road Area was added. The existing access road will be paved, but the existing drainage is mostly sheetflow, and a lot of the drainage patterns lack a well-defined concentration point. The model was created to show that the small increase in impervious area is negligible from a hydromodification perspective, with the large amount of upstream area. Some of the roadway will be addressed via dispersion, but the rest would be addressed from a stormwater water quality perspective via onsite alternative compliance. Output shows this model to be in compliance with the hydromodification flow duration requirements, and onsite alternative compliance calculations are found in Attachment 7 of the SWQMP.

## Flow Frequency Analysis

The range of flows that are managed by each basin are provided in Table 1. This table includes the calculation method used to develop them as well as the erosion susceptibility findings of the Geomorphic Assessment of Receiving Channels, per a separate report from Chang Consultants. These statistics are provided in Attachment 8 of the SWQMP.

## Stormwater Basin Model

The basins were all represented in SWMM using the LID controls and the storage node. This is due to the ability of storage nodes to simulate orifice discharge with stage-storage curves above the ponding depth and the bioretention LID module that represents the outflow and basin geometry and soils. Only the open water storage volumes were accounted for in the stage- storage curves meaning the media storage was neglected and not added in as an equivalent storage depth. The stage-storage curves are input as straight-line interpolations between the top and bottom areas as provided in Table 2.

Table 2 - Basin Storage Curves

| Basin ID /POC ID | Bottom Area of Storage Node (WQ Ponding Depth Elevation) (sf) | Top Area (sf) | Depth (ft) |
|---|---|---|---|
| 1A | 49,238 | 80,471 | 6.25 |
| 1B | 3,253 | 5,413 | 2.25 |
| 2H | 10,118 | 14,500 | 3.25 |
| 3A | 2,912 | 7,701 | 5.25 |
| 3B | 3,886 | 7,463 | 4.25 |
| 3C | 8,029 | 13,157 | 4.25 |
| 3D | 16,500 | 23,731 | 3.75 |
| 3E | 2,069 | 6,449 | 4.25 |
| 3F | 2,207 | 4,160 | 2.25 |
| 3G | 2,425 | 5,256 | 3.25 |
| 3H | 2,273 | 4,374 | 2.75 |
| 3I | 3,678 | 8,631 | 4.25 |
| 3J | 3,096 | 6,351 | 4.25 |
| 3K | 2,968 | 5,310 | 4.25 |

## Orifice Configuration and Sizing

Partial retention and no infiltrations basins were assigned mid, low and/or high orifices as well as an underdrain orifice. Initial sizes and invert depths were based on an estimate of what would be expected to meet peak flow, hydromodification, and water quality control requirements together. These include maintaining a ponded surface of a minimum of 6 inches for water quality, a total drawdown time of less than 96 hours, and reducing peak flows while ensuring appropriate free board. Simulation runs were performed and these sizes and depths were adjusted until the flow duration requirements were met for the flow rates

corresponding to the required control frequencies (fraction of the 2 year to the 10 year). A number of iterations were performed on the outlet configurations between the peak flow and hydromodification SWMM models until all requirements were satisfied. The orifice sizes and configurations are provided in Attachment 6.

### Flow Duration Curves for Hydromodification Compliance

Pre and post developed flow duration exceedance curves were developed for the hourly flow data using an automatic partial duration series calculator in PCSWMM. These curves were graphed over the flow ranges listed in Table 1 and are provided in Attachment 7. Calculations for the flow duration curves have also been provided in Attachment 7. In all cases the duration of post developed flows are brought to within that of the pre developed flows for a fraction of the two year flow to the ten year flow indicating compliance.

### Drawdown

To check that that all the basins would drawdown within the required 96 hour period, drawdown calculations were performed starting from the top of the basin to the finished grade of basin. The basin is modeled as completed full and shows compliance of draining with 96 hours. Drawdown graphs and output of time vs elevation in basin have been provided in Attachment 8. All basins drawdown to the bottom surface area within 48 hours.

## Summary

The pre-developed conditions of the Ocean Breeze Ranch project site were modeled in SWMM to determine a baseline of flow duration and that would need to be controlled in the post-developed conditions. Based on the SWMM model results for this study it is determined that all proposed basins will be able to satisfy the hydromodification criteria, many of which will provide pollutant control and peak flow detention as well. This study is intended to demonstrate that the basins as sized are capable of providing hydromodification compliance.

Attachments

1 – Hydromodification Management Exhibit

2 – SWMM Model w/ Subcatchment Parameters and Schematics

3 – SWMM Output – Existing Condition

4 – SWMM Output – Proposed Conditions

5 – Flow Frequency Statistical Analysis results

6 – Basin Cross Sections

7 – Flow Duration Curves

8 – Drawdown Graphs

9 – POC 2H Exemption Calculations

N

REY RIVER

SAN LUIS

POC #2B
OUTLET ELEV=190.04
*HYDROMOD EXEMPT*
*10 YEAR WSE = 190.73'*

EX 100-YEAR FLOODPLAIN

DMA 3
18.54 AC

DMA 4B

DMA 2
19.37 AC

DMA 4A
3.50 AC

DMA 5
4.13 AC

DMA 16
3.28 AC

DMA 6
2.91 AC

DMA 7
3.73 AC

3.66 AC
DMA 8

POC #1 OUTLET
ELEV= 182.00
*HYDROMOD EXEMPT*
*10 YEAR WSE = 183.24*

EX 100-YEAR FLOODPLAIN

*Note:*
*Groundwater depth varies from 3 to > 20 feet*

POC #2H
OUTLET ELEV= 184.00
*HYDROMOD EXEMPT*
*10 YEAR WSE = 184.10*

SUBCATCHMENT 18
25.23 AC

POC #1A

DMA 1
39.90 AC

DMA 9

AREA NOT INCLUDED IN PRE CONDITION. ADDED IN POST CONDITION DUE TO GRADING

POC #1B

8.11 AC

SELF-MITIGATING SUBCATCHMENT
0.43 AC

SUBCATCHMENT 20

**FOR CONTINUATION SEE EXHIBIT 2 of 3**

**LEGEND**

| | | | |
|---|---|---|---|
| SUBCATCHMENT AREA | X.XX Ac. | SOIL TYPE A | |
| DRAINAGE FLOWPATH | | SOIL TYPE B | |
| SUBCATCHMENT BOUNDARY | | SOIL TYPE C (NO HATCH) | |
| HMP EXEMPT DMA BOUNDARY | | SOIL TYPE D | |
| EXISTING 100-YEAR FLOODPLAIN | | | |


PREPARED BY:
PROJECT DESIGN CONSULTANTS
Planning | Landscape Architecture | Engineering | Survey
701 B Street, Suite 800
San Diego, CA 92101
619.235.6470 Tel
619.234.0349 Fax


| | |
|---|---|
| SCALE: | 1" = 150' |
| JOB #: | 4192.10 |
| CREATED: | 5/18/20 |

**COUNTY OF SAN DIEGO**
**OCEAN BREEZE RANCH**
***PRE-CONDITION HYDROMODIFICATION MGMT Exhibit (1 of 4)***

FOR CONTINUATION SEE EXHIBIT 1 of 3

N

POC #3G

POC #3F

POC #3E

POC #3D

POC #3C

POC #3B

POC #3J

POC #3A

DMA 16 — 2.15 AC

DMA 14 — 1.45 AC

6.09 AC

EXISTING HILLSIDE TRIBUTARY TO POC 3F

1.45 AC

DMA 12 — 38.98 AC

9.05 AC DMA 11

2.37 AC DMA 19

2.52 AC DMA 22

1.21 AC DMA 10

DMA 9

AREA NOT INCLUDED IN PRE CONDITION. ADDED IN POST CONDITION DUE TO GRADING

AREA NOT INCLUDED IN PRE CONDITION. ADDED IN POST CONDITION DUE TO GRADING

NORMAN L. SULLIVAN MIDDLE SCHOOL

17.08 AC

3.47 AC

FOR CONTINUATION SEE EXHIBIT 3 of 3

Note:
Groundwater depth varies from 3 to > 20 feet

## LEGEND

| | | |
|---|---|---|
| SUBCATCHMENT AREA | X.XX Ac. | SOIL TYPE A |
| DRAINAGE FLOWPATH | | SOIL TYPE B |
| SUBCATCHMENT BOUNDARY | | SOIL TYPE C (NO HATCH) |
| HMP EXEMPT DMA BOUNDARY | | SOIL TYPE D |
| EXISTING 100-YEAR FLOODPLAIN | | |


PREPARED BY:
PROJECT DESIGN CONSULTANTS
Planning | Landscape Architecture | Engineering | Survey
701 B Street, Suite 800
San Diego, CA 92101
619.235.6405 Tel
619.234.0349 Fax


| | |
|---|---|
| SCALE: | 1" = 200' |
| JOB #: | 4192.10 |
| CREATED: | 5/18/20 |

**COUNTY OF SAN DIEGO**

**OCEAN BREEZE RANCH**

*PRE-CONDITION HYDROMODIFICATION MGMT*
*Exhibit (2 of 4)*

## LEGEND:

- DRAINAGE MANAGEMENT AREA
- SOIL TYPE A
- SOIL TYPE B
- SOIL TYPE C (NO HATCH)
- SOIL TYPE D

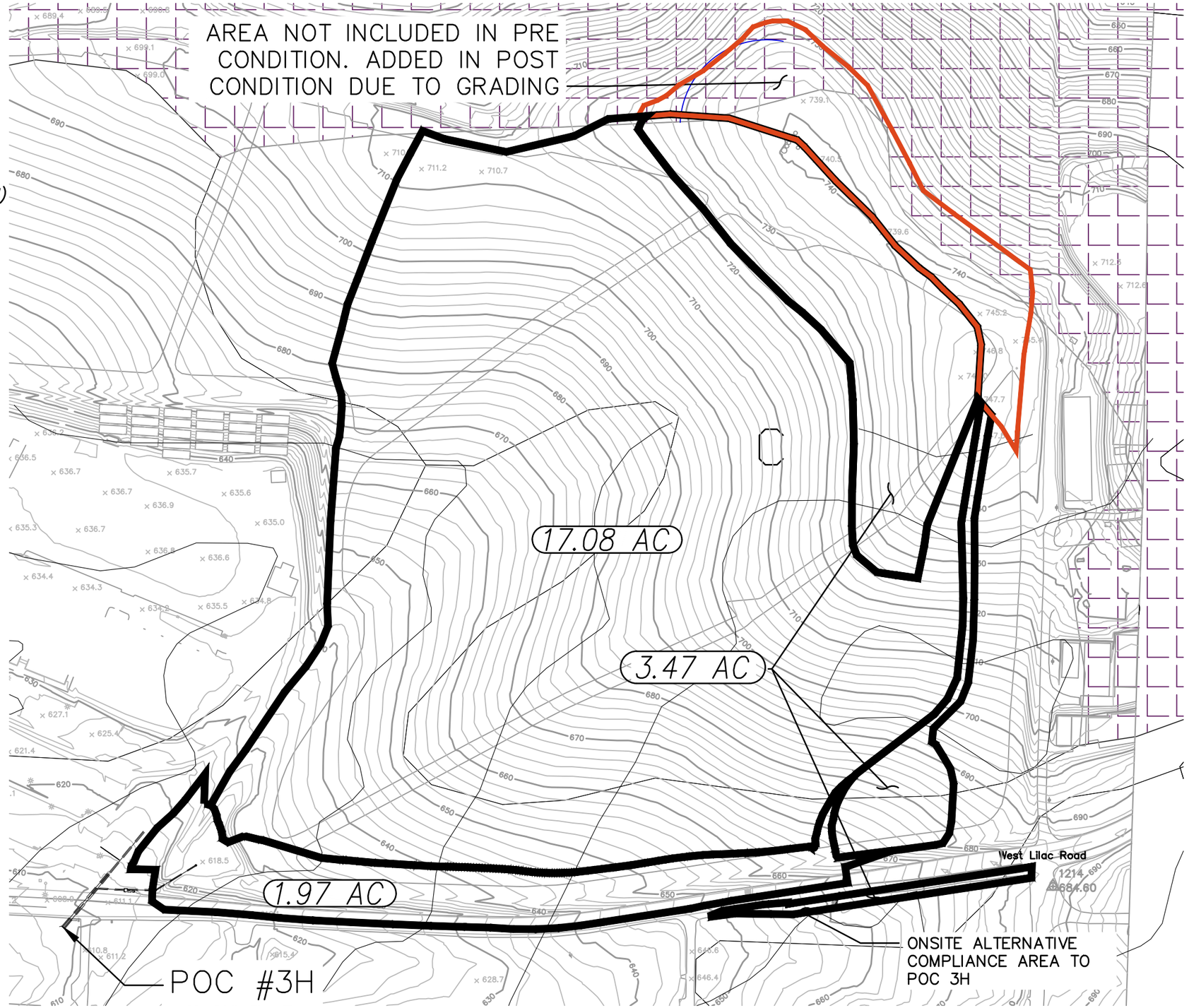


N

| | |
|---|---|
| SCALE: | 1"=150' |
| JOB #: | 4192.10 |
| CREATED: | 5/18/20 |

PREPARED BY:


PROJECT DESIGN CONSULTANTS
Planning | Engineering | Survey
701 B Street, Suite 800
San Diego, CA 92101
619.235.6471 Tel
619.234.0349 Fax


**COUNTY OF SAN DIEGO**

**OCEAN BREEZE RANCH**

***PRE-CONDITION HYDROMODIFICATION MGMT EXHIBIT (3 OF 4)***

POC #2H

OUTLET ELEV= 184.00

*HYDROMOD EXEMPT*

*10 YEAR WSE = 184.10*

**SUBCATCHMENT 18**

25.23 AC

## LEGEND:

| | | | |
|---|---|---|---|
| | HMP EXEMPT DRAINAGE MANAGEMENT AREA | | EXISTING 100-YEAR FLOODPLAIN |
| | SOIL TYPE A | | SOIL TYPE C (NO HATCH) |
| | SOIL TYPE B | | SOIL TYPE D |

N

| | |
|---|---|
| SCALE: | 1"=150' |
| JOB #: | 4192.10 |
| CREATED: | 2/28/24 |

PREPARED BY:

PROJECT DESIGN CONSULTANTS
Planning | Engineering | Survey
701 B Street, Suite 800
San Diego, CA 92101
619.235.6471 Tel
619.234.0349 Fax

**COUNTY OF SAN DIEGO**

**OCEAN BREEZE RANCH**

***PRE-CONDITION HYDROMODIFICATION MGMT EXHIBIT (4 OF 4)***

POC #EQ ROAD

375.94 AC

NORMAN L. SULLIVAN MIDDLE SCHOOL

W LILAC RD

W LILAC RD

W LILAC RD

Note:
Groundwater depth varies from 3 to > 20 feet

**LEGEND**

AREA FROM DRAINAGE MANAGEMENT AREA (X.XX Ac.)

DRAINAGE FLOWPATH

SUBCATCHMENT BOUNDARY

SOIL TYPES D

PREPARED BY:


**PROJECT DESIGN CONSULTANTS**
Planning | Landscape Architecture | Engineering | Survey
701 B Street, Suite 800
San Diego, CA 92101
619.235.6471 Tel
619.234.0349 Fax


| | |
|---|---|
| SCALE: | 1" = 200' |
| JOB #: | 4192.10 |
| CREATED: | 7/1/23 |

**COUNTY OF SAN DIEGO**

**OCEAN BREEZE RANCH**

*HYDROMODIFICATION EXHIBIT*
*PRE CONDITION EQUESTRIAN ROAD EXHIBIT*

POC #2B
OUTLET ELEV=190.04

*HYDROMOD EXEMPT*
*10 YEAR WSE = 190.73'*

PROPOSED
100–YEAR
FLOODPLAIN

PROPOSED
100–YEAR
FLOODPLAIN

POC #1 OUTLET
ELEV= 182.00

*HYDROMOD EXEMPT*
*10 YEAR WSE = 183.24*

PROPOSED
100–YEAR
FLOODPLAIN

*Note:*
*Groundwater depth varies*
*from 3 to > 20 feet*

POC #2H OUTLET
ELEV=184.00

*HYDROMOD EXEMPT*
*100 YEAR WSE = 184.10*

*FOR THIS AREA REFER TO EXHIBIT 5*

BASIN 2B
BASIN 2A
BASIN 2C
BASIN 2D
BASIN 2I
BASIN 2F
BASIN 2G
BASIN 2H
BASIN 1B

DMA 2
DMA 3
DMA 4A
3.50 AC
DMA 4B
DMA 5
DMA 6
DMA 8
3.66 AC
DMA 16
DMA 3.73 AC
DMA 18
8.43 AC
7.05 AC

WILLOW RD
REDONDO DR

**LEGEND**

| | | | |
|---|---|---|---|
| AREA OF DRAINAGE MANAGEMENT AREA | X.XX Ac. | SOIL TYPE A | |
| DRAINAGE FLOWPATH | → | SOIL TYPE B | |
| SUBCATCHMENT BOUNDARY | | SOIL TYPE C (NO HATCH) | |
| HMP EXEMPT DMA BOUNDARY | | SOIL TYPE D | |
| EXISTING 100–YEAR FLOODPLAIN | | PROP. 100–YEAR FLOODPLAIN | |

NOTE: SEDIMENT TRAP BASINS WILL BE REMOVED IN THE ULTIMATE CONDITION

FOR CONTINUATION SEE EXHIBIT 2 of 5

FOR CONTINUATION SEE EXHIBIT 2 of 5

NOTE: DMAs/SUBCATCHMENTS MODELED IN SWMM MIGHT BE DIFFERENT THAN SWQMP DMAs DUE TO DIVERSION AREAS AND SOME BASINS MODELED IN SEPARATE SUBCATCHMENTS THAN OVERALL DMA.


PREPARED BY:

**PROJECT DESIGN CONSULTANTS**
Planning | Landscape Architecture | Engineering | Survey
701 B Street, Suite 800
San Diego, CA 92101
619.235.6471 Tel
619.234.0349 Fax


| | |
|---|---|
| SCALE: | 1" = 100' |
| JOB #: | 4192.10 |
| CREATED: | 5/18/20 |

**COUNTY OF SAN DIEGO**
**OCEAN BREEZE RANCH**
*HYDROMODIFICATION EXHIBIT*
*ULTIMATE CONDITIONS*
*EXHIBIT (1 OF 5)*

Q:\CA-SAND-PD\Projects\4192.10\Engr\Reports\Hydromod-FET\DAY\4192.10 -Hydromod Exhibit.dwg 11/25/2024 5:14:14 PM

N

DMA 3

3.66 AC

DMA 8

DMA 7

3.73 AC

BASIN 2G

BASIN 2F

FOR THIS AREA REFER TO EXHIBIT 1

POC #1A

BYPASS

PORTION OF DMA 1 WHICH EXISTING AREA FLOWS TO POC 1A. AREA NORTH OF THIS RIDGE IS ACCOUNTED FOR AS DISPERSION IN HMP MODEL.

DMA 1

49.32 AC

3.04 AC

DMA 9

BASIN 1A

POC #1B

SELF-MITIGATING SUBCATCHMENT

0.43 AC

BASIN 1B

0.21 AC

7.05 AC

BYPASS TO POC 1B

FOR CONTINUATION SEE EXHIBIT 3 of 5

NOTE: DMAs/SUBCATCHMENTS MODELED IN SWMM MIGHT BE DIFFERENT THAN SWQMP DMAs DUE TO DIVERSION AREAS AND SOME BASINS MODELED IN SEPARATE SUBCATCHMENTS THAN OVERALL DMA.

**LEGEND**

| | | | |
|---|---|---|---|
| AREA OF DRAINAGE MANAGEMENT AREA | X.XX Ac. | SOIL TYPE A | |
| DRAINAGE FLOWPATH | | SOIL TYPE B | |
| SUBCATCHMENT BOUNDARY | | SOIL TYPE C (NO HATCH) | |
| HMP EXEMPT DMA BOUNDARY | | SOIL TYPE D | |
| EXISTING 100-YEAR FLOODPLAIN | | PROP. 100-YEAR FLOODPLAIN | |

NOTE: SEDIMENT TRAP BASINS WILL BE REMOVED IN THE ULTIMATE CONDITION

PREPARED BY:

PROJECT DESIGN CONSULTANTS
Planning | Landscape Architecture | Engineering | Survey

701 B Street, Suite 800
San Diego, CA 92101
619.235.6471 Tel
619.234.0349 Fax

SCALE: 1" = 100'
JOB #: 4192.10
CREATED: 5/18/20

**COUNTY OF SAN DIEGO**
**OCEAN BREEZE RANCH**
*HYDROMODIFICATION EXHIBIT*
*ULTIMATE CONDITIONS*
*EXHIBIT (2 OF 5)*

G:\DA-SAND-PD\Projects\4192.10\Engr\Reports\Hydromod-PE\EXH\4192.10 -Hydromod Exhibit.dwg 10/31/2024 8:40:02 AM

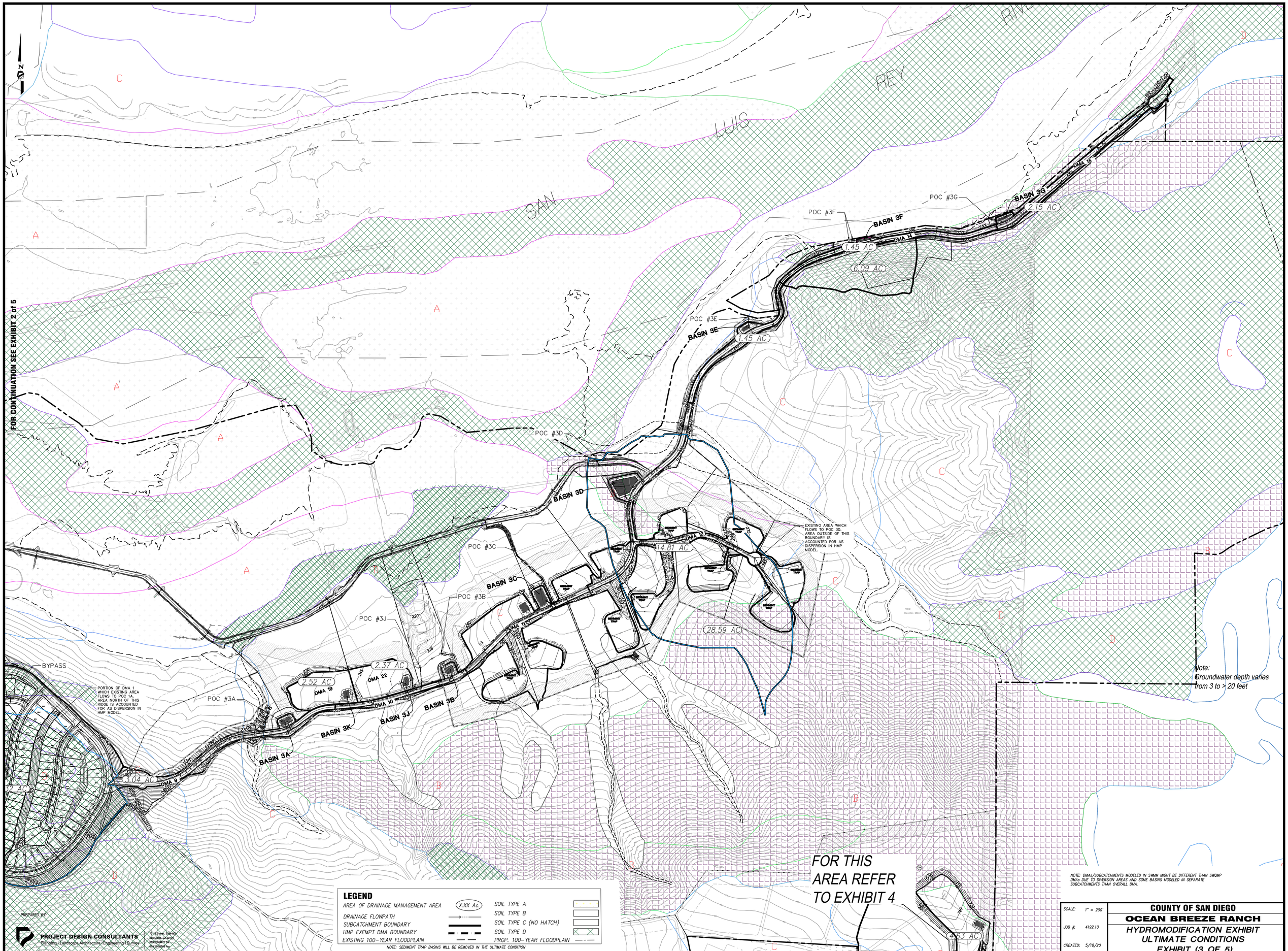


**LEGEND**

| | | | |
|---|---|---|---|
| AREA OF DRAINAGE MANAGEMENT AREA | X.XX Ac. | SOIL TYPE A | |
| DRAINAGE FLOWPATH | | SOIL TYPE B | |
| SUBCATCHMENT BOUNDARY | | SOIL TYPE C (NO HATCH) | |
| HMP EXEMPT DMA BOUNDARY | | SOIL TYPE D | |
| EXISTING 100-YEAR FLOODPLAIN | | PROP. 100-YEAR FLOODPLAIN | |

NOTE: SEDIMENT TRAP BASINS WILL BE REMOVED IN THE ULTIMATE CONDITION

NOTE: DMAs/SUBCATCHMENTS MODELED IN SWMM MIGHT BE DIFFERENT THAN SWQMP DMAs DUE TO DIVERSION AREAS AND SOME BASINS MODELED IN SEPARATE SUBCATCHMENTS THAN OVERALL DMA.

PREPARED BY:

PROJECT DESIGN CONSULTANTS
Planning | Landscape Architecture | Engineering | Survey

701 B Street, Suite 800
San Diego, CA 92101
619.235.6471 Tel
619.235.0389 Fax

| | |
|---|---|
| SCALE: | 1" = 200' |
| JOB #: | 4192.10 |
| CREATED: | 5/18/20 |

**COUNTY OF SAN DIEGO**

**OCEAN BREEZE RANCH**

**HYDROMODIFICATION EXHIBIT**
**ULTIMATE CONDITIONS**
**EXHIBIT (3 OF 5)**

Q:\CA-SAND-PD\Projects\4192.10\Engr\Reports\Hydromod-FE\EXH\4192.10 -Hydromod Exhibit.dwg 10/31/2024 9:11:39 AM

# LEGEND

AREA FROM DRAINAGE MANAGEMENT AREA — X.XX Ac.

DRAINAGE FLOWPATH

SUBCATCHMENT BOUNDARY

HMP EXEMPT DMA BOUNDARY

SOIL TYPE A

SOIL TYPE B

SOIL TYPE C (NO HATCH)

SOIL TYPE D

NOTE: SEDIMENT TRAP BASINS WILL BE REMOVED IN THE ULTIMATE CONDITION

NOTE: DMAs/SUBCATCHMENTS MODELED IN SWMM MIGHT BE DIFFERENT THAN SWQMP DMAs DUE TO DIVERSION AREAS AND SOME BASINS MODELED IN SEPARATE SUBCATCHMENTS THAN OVERALL DMA.

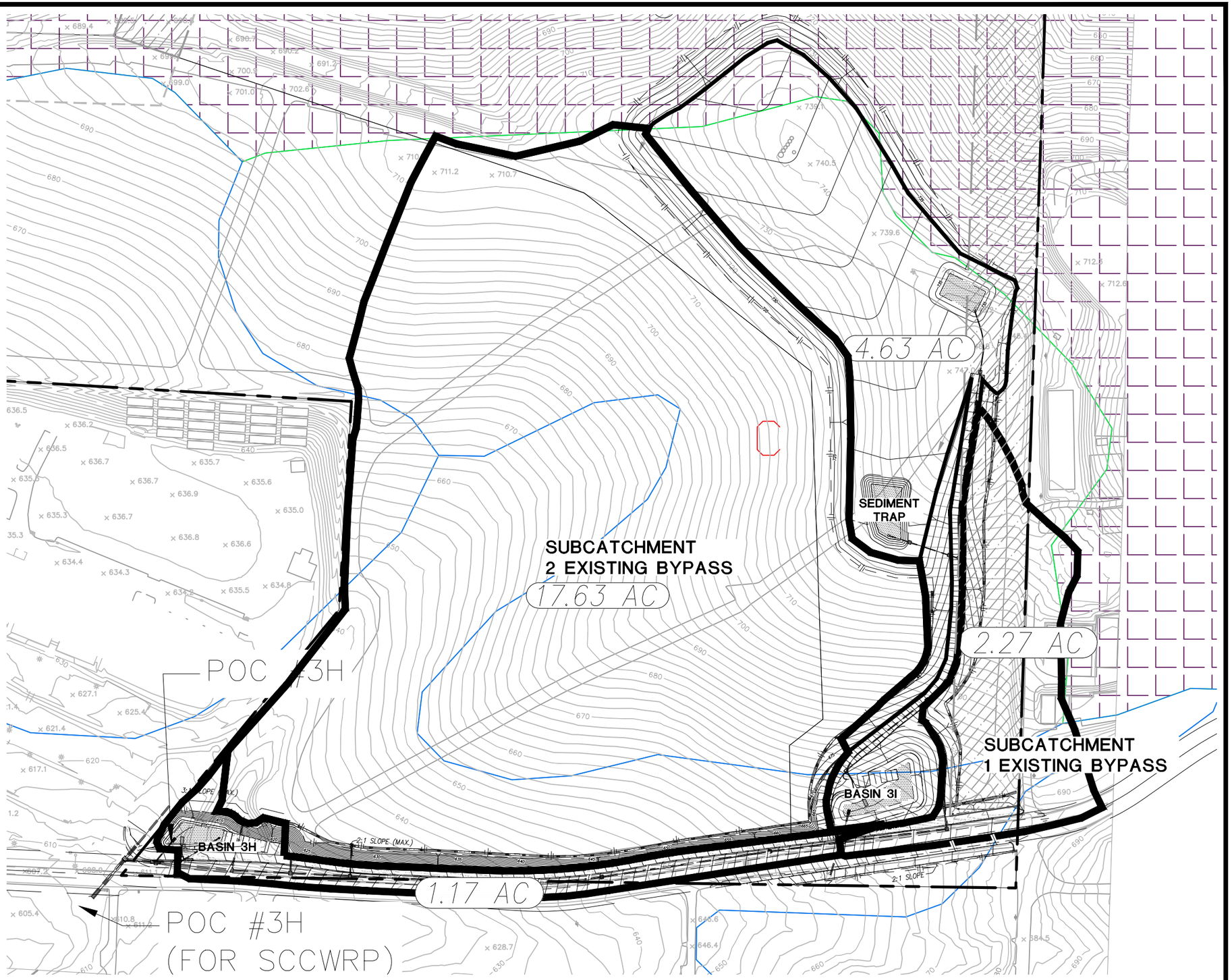


N

| | |
|---|---|
| SCALE: | 1"=150' |
| JOB #: | 4192.10 |
| CREATED: | 5/18/20 |

PREPARED BY:


PROJECT DESIGN CONSULTANTS
Planning | Engineering | Survey
701 B Street, Suite 800
San Diego, CA 92101
619.235.6471 Tel
619.234.0349 Fax


**COUNTY OF SAN DIEGO**

**OCEAN BREEZE RANCH**

*HYDROMODIFICATION EXHIBIT*
*ULTIMATE CONDITIONS*
*EXHIBIT (4 OF 5)*

FOR CONTINUATION SEE EXHIBIT 1 of 5

POC #2H OUTLET
ELEV=184.00

× HYDROMOD EXEMPT
100 YEAR WSE = 184.10

BASIN 2H
DMA 18

8.43 AC

W LILAC RD

BASIN 1B
0.21 AC
7.05 AC

REDONDO DR

CAMINO DEL CIELO

FOR CONTINUATION SEE EXHIBIT 2 of 5

## LEGEND

| | |
|---|---|
| AREA FROM DRAINAGE MANAGEMENT AREA | X.XX Ac. |
| DRAINAGE FLOWPATH | |
| SUBCATCHMENT BOUNDARY | |
| HMP EXEMPT DMA BOUNDARY | |
| SOIL TYPE A | |
| SOIL TYPE B | |
| SOIL TYPE C (NO HATCH) | |
| SOIL TYPE D | |

NOTE: DMAs/SUBCATCHMENTS MODELED IN SWMM MIGHT BE DIFFERENT THAN SWQMP DMAs DUE TO DIVERSION AREAS AND SOME BASINS MODELED IN SEPARATE SUBCATCHMENTS THAN OVERALL DMA.

N

100 50 0 100 200 300

SCALE: 1"=100'

| | |
|---|---|
| SCALE: | 1"=100' |
| JOB #: | 4192.10 |
| CREATED: | 2/28/24 |

PREPARED BY:

**PROJECT DESIGN CONSULTANTS**
Planning | Landscape Architecture | Engineering | Survey
701 B Street, Suite 800
San Diego, CA 92101
619.235.6471 Tel
619.234.0349 Fax

**COUNTY OF SAN DIEGO**
**OCEAN BREEZE RANCH**
*HYDROMODIFICATION EXHIBIT*
*ULTIMATE CONDITIONS*
*EXHIBIT (5 OF 5)*

D:\CA-SAND-PD\Projects\4192.10\Engr\Reports\Hydromod-FE\EXH\4192.10 -Hydromod Exhibit.dwg 10/31/2024 8:41:07 AM




PREPARED BY:


PROJECT DESIGN CONSULTANTS
Planning | Landscape Architecture | Engineering | Survey
701 B Street, Suite 800
San Diego, CA 92101
619.235.6471 Tel
619.234.0349 Fax


| | |
|---|---|
| SCALE: | 1" = 200' |
| JOB #: | 4192.10 |
| CREATED: | 5/18/20 |

**COUNTY OF SAN DIEGO**

**OCEAN BREEZE RANCH**

***HYDROMODIFICATION EXHIBIT***
***PROPOSED CONDITIONS EQ ROAD***
***EXHIBIT***


G:\CA-SAND-PD\Projects\4192.10\Engr\Reports\Hydromod-TM_TE\EXH\4192.10 -Hydromod Exhibit-Prop-EQ Road.dwg 8/7/2024 3:35:29 PM

**LEGEND:**

- DRAINAGE MANAGEMENT AREA
- POST-CONDITION AREA TO POC XX WITH SAME PRE-CONDITION CONCENTRATION POINT
- DIVERTED AREA TO POC XX WITH DIFFERENT PRE-CONDITION CONCENTRATION POINT
- EXISTING CONDITION DRAINAGE SUBAREA

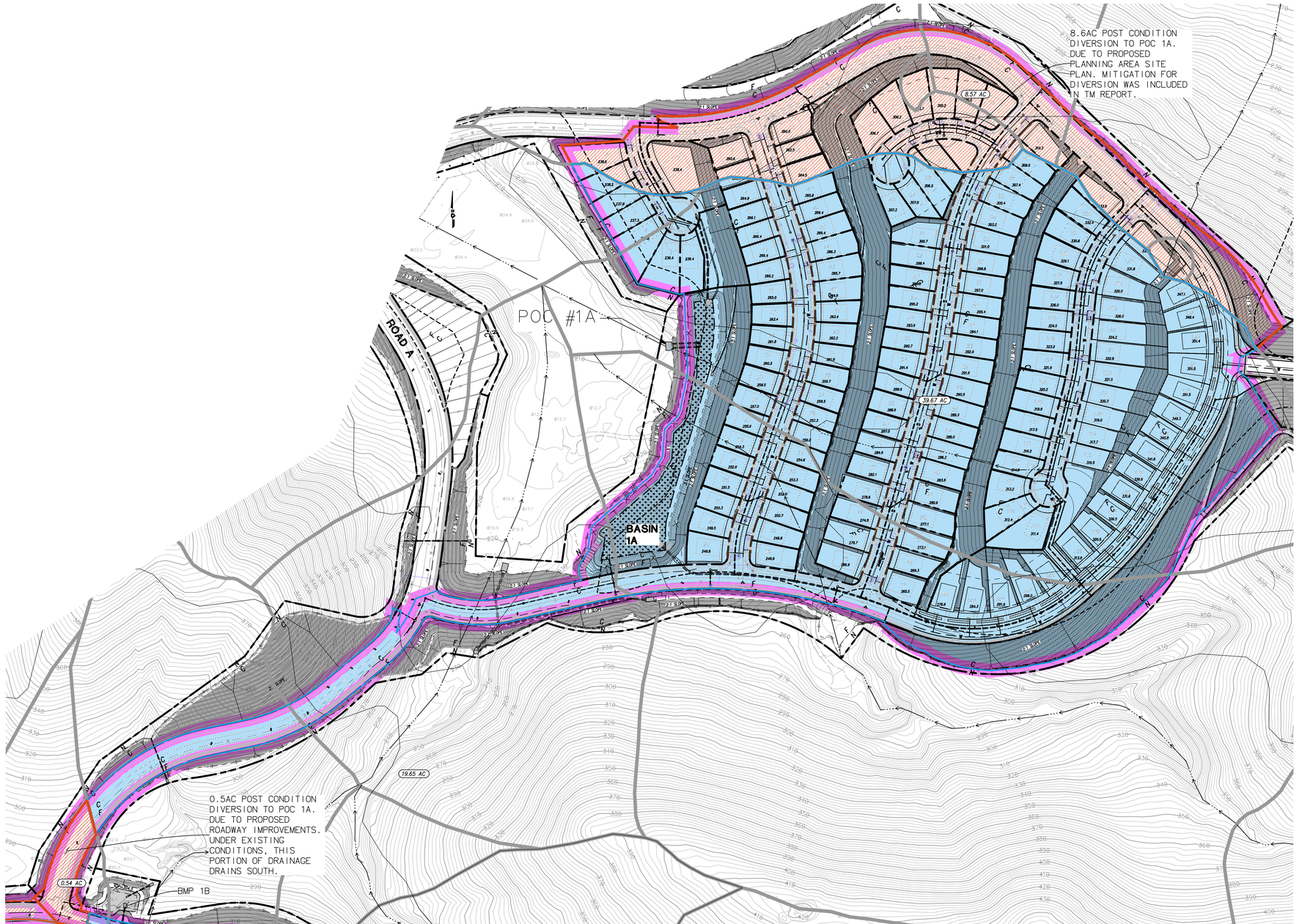


# POC 1A

| | |
|---|---|
| SCALE: | 1" = 100' |
| JOB #: | 4192.10 |
| CREATED: | 12/28/20 |

PREPARED BY:


PROJECT DESIGN CONSULTANTS
Planning | Landscape Architecture | Engineering | Survey
701 B Street, Suite 800
San Diego, CA 92101
619.235.6471 Tel
619.234.0349 Fax


**COUNTY OF SAN DIEGO**

**OCEAN BREEZE RANCH**

*DIVERSION EXHIBIT*
*EXHIBIT 1 OF 2*


Last save by JEFF NOVOA, File Name Q:\CA-SAND-PD\Projects\4192.10\Engr\Reports\Hydromod-FE\EXH\Diversion Exhibit_Comment 1-47.dwg, Date Last Saved 8/8/2024 4:07:54 PM, Date Plotted Last 8/8/2024 4:11:16 PM

**LEGEND:**

- DRAINAGE MANAGEMENT AREA
- POST-CONDITION AREA TO POC XX WITH SAME PRE-CONDITION CONCENTRATION POINT
- DIVERTED AREA TO POC XX WITH DIFFERENT PRE-CONDITION CONCENTRATION POINT
- EXISTING CONDITION DRAINAGE SUBAREA

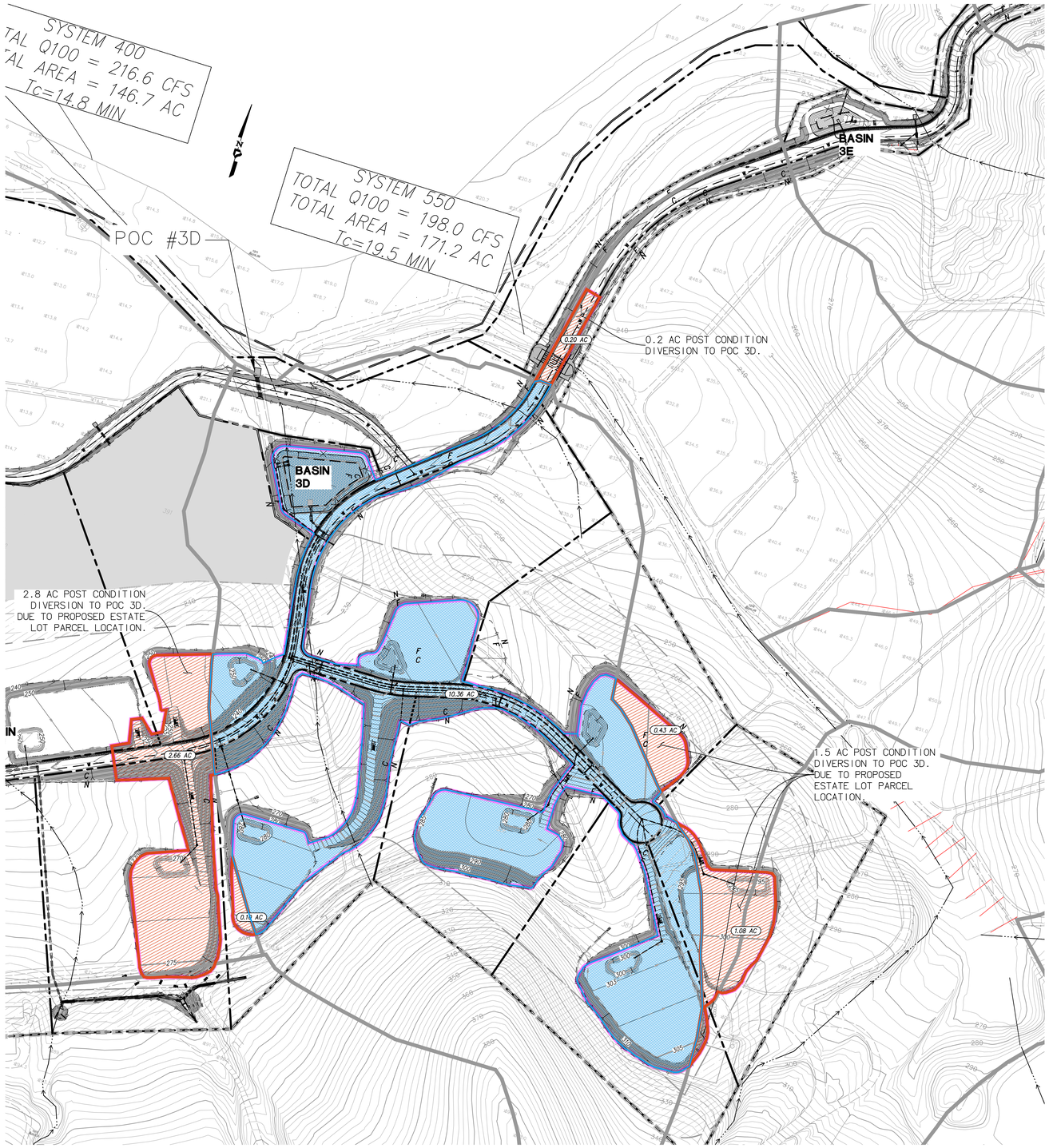


POC 3D

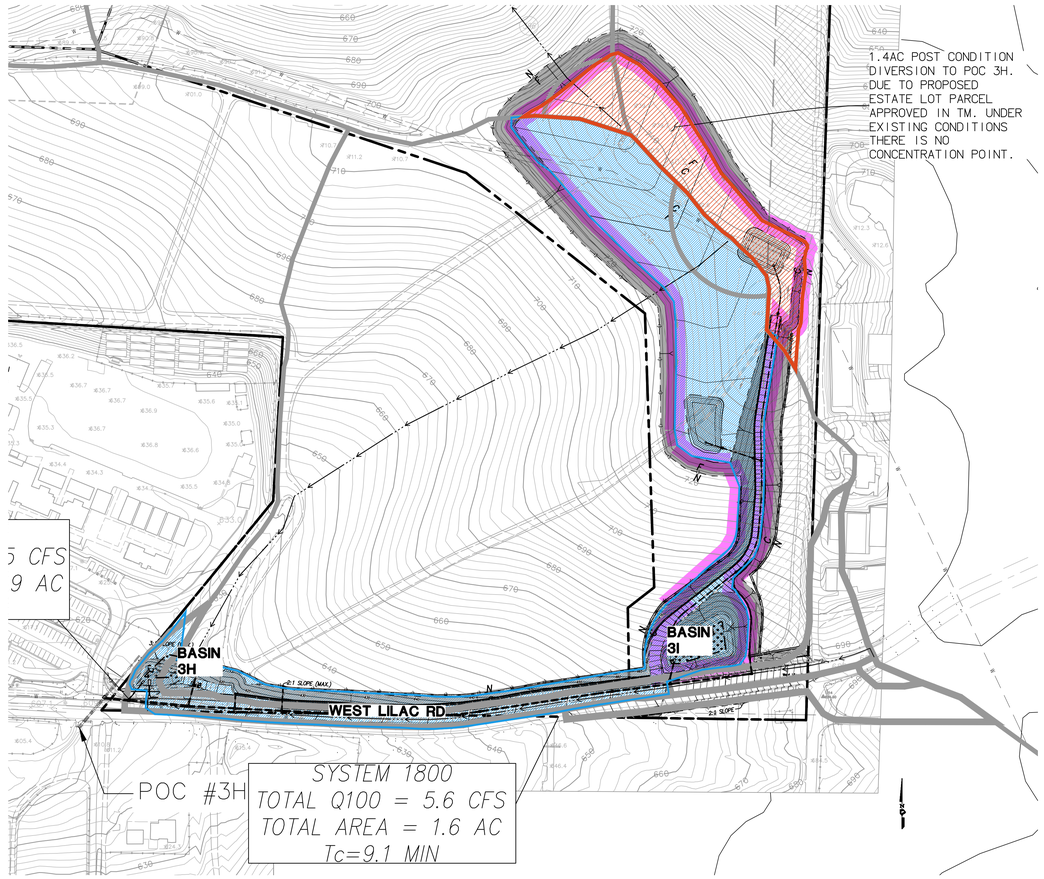


POC 3H

| | |
|---|---|
| SCALE: | 1" = 100' |
| JOB #: | 4192.10 |
| CREATED: | 12/28/20 |

PREPARED BY:


PROJECT DESIGN CONSULTANTS
Planning | Landscape Architecture | Engineering | Survey
701 B Street, Suite 800
San Diego, CA 92101
619.235.6471 Tel
619.234.0349 Fax


**COUNTY OF SAN DIEGO**

**OCEAN BREEZE RANCH**

*DIVERSION EXHIBIT*
*EXHIBIT 2 OF 2*


Last save by JEFF NOVOA, File Name Q:\CA-SAND-PD\Projects\4192.10\Engr\Reports\Hydromod-FE\EXH\Diversion Exhibit_Comment 1-47.dwg, Date Last Saved 10/29/2024 8:19:38 AM, Date Plotted Last 10/29/2024 8:20:48 AM

# ATTACHMENT 2

## SWMM Model with
## Sub-catchment Parameters and Schematic

**DMA Soil Types for SWMM Infiltration Parameters**

**DMA 1 + PRE**

| | SF | % | suction Head | Conductivity | Deficit |
|---|---|---|---|---|---|
| Soil A | 217998 | 0.10 | 1.5 | 0.3 | 0.33 |
| Soil B | 23642 | 0.01 | 3 | 0.2 | 0.32 |
| Soil C | 423157 | 0.20 | 6 | 0.1 | 0.31 |
| Soil D | 1483677 | 0.69 | 9 | 0.025 | 0.3 |
| Total | 2148474 | 100 | 7.582 | 0.070 | 0.305 |

Saturated Hydraulic Conductivity

25%less Cond for Post
0.052201

**Basin 1A**

| | SF | % | suction He | Conductivi | Deficit |
|---|---|---|---|---|---|
| Soil A | 40972 | 0.53 | 1.5 | 0.3 | 0.33 |
| Soil B | 0 | 0.00 | 3 | 0.2 | 0.32 |
| Soil C | 16205 | 0.21 | 6 | 0.1 | 0.31 |
| Soil D | 19782 | 0.26 | 9 | 0.025 | 0.3 |
| Total | 76959 | 100 | 4.375 | 0.187 | 0.318 |

Saturated Hydraulic Conductivity

25%less Cond for Post
0.140399

**Pre DMA 1B**

| | SF | % | suction Head | Conductivity | Deficit |
|---|---|---|---|---|---|
| Soil A | | 0.00 | 1.5 | 0.3 | 0.33 |
| Soil B | 341616 | 0.99 | 3 | 0.2 | 0.32 |
| Soil C | | 0.00 | 6 | 0.1 | 0.31 |
| Soil D | 2336 | 0.01 | 9 | 0.025 | 0.3 |
| Total | 343952 | 100 | 3.041 | 0.199 | 0.320 |

25%less Cond for Post
0.149109

**Post DMA 1B**

| | SF | % | suction He | Conductivi | Deficit |
|---|---|---|---|---|---|
| Soil A | | 0.00 | 1.5 | 0.3 | 0.33 |
| Soil B | 325727 | 1.00 | 3 | 0.2 | 0.32 |
| Soil C | | 0.00 | 6 | 0.1 | 0.31 |
| Soil D | 0 | 0.00 | 9 | 0.025 | 0.3 |
| Total | 325727 | 100 | 3.000 | 0.200 | 0.320 |

25%less Cond for Post
0.150000

**Basin 1B**

| | SF | % | suction He | Conductivi | Deficit |
|---|---|---|---|---|---|
| Soil A | | 0.00 | 1.5 | 0.3 | 0.33 |
| Soil B | 6716 | 0.74 | 3 | 0.2 | 0.32 |
| Soil C | | 0.00 | 6 | 0.1 | 0.31 |
| Soil D | 2336 | 0.26 | 9 | 0.025 | 0.3 |
| Total | 9052 | 100 | 4.548 | 0.155 | 0.315 |

Saturated Hydraulic Conductivity

25%less Cond for Post
0.116129

**DMA 2H**

| | SF | % | Suction Head | Conductivity | Deficit |
|---|---|---|---|---|---|
| Soil A | | 0.00 | 1.5 | 0.3 | 0.33 |
| Soil B | 19795 | 0.06 | 3 | 0.2 | 0.32 |
| Soil C | | 0.00 | 6 | 0.1 | 0.31 |
| Soil D | 292235 | 0.94 | 9 | 0.025 | 0.3 |
| Total | 312030 | 100 | 8.619 | 0.036 | 0.301 |

0.027

**Basin 2H**

| | SF | % | Suction He | Conductivi | Deficit |
|---|---|---|---|---|---|
| Soil A | | 0.00 | 1.5 | 0.3 | 0.33 |
| Soil B | | 0.00 | 3 | 0.2 | 0.32 |
| Soil C | | 0.00 | 6 | 0.1 | 0.31 |
| Soil D | 7191 | 1.00 | 9 | 0.025 | 0.3 |
| Total | 7191 | 100 | 9.000 | 0.025 | 0.300 |

0.019

**Basin 2H Hydromod Update - Pre**

| | SF | % | Suction He | Conductivi | Deficit |
|---|---|---|---|---|---|
| Soil A | 10656 | 0.03 | 1.5 | 0.3 | 0.33 |
| Soil B | | 0.00 | 3 | 0.2 | 0.32 |
| Soil C | 345124 | 31% | 6 | 0.1 | 0.31 |
| Soil D | 738614 | 67% | 9 | 0.025 | 0.3 |
| Total | 1099033 | 100 | 7.984 | 0.058 | 0.310 |

**Basin 2H Hydromod Update - Post - BYPASS ROAD**

| | SF | % | Suction He | Conductivi | Deficit |
|---|---|---|---|---|---|
| Soil A | 9928 | 49% | 1.5 | 0.3 | 0.33 |
| Soil B | | 0.00 | 3 | 0.2 | 0.32 |
| Soil C | 2731 | 14% | 6 | 0.1 | 0.31 |
| Soil D | 7567 | 37% | 9 | 0.025 | 0.3 |
| Total | 20226 | 100% | 4.914 | 0.170 | 0.316 |

**Basin 2H Hydromod Update - DMA 1000 (BYPASS)**

| | SF | % | Suction He | Conductivi | Deficit |
|---|---|---|---|---|---|
| Soil A | | 0% | 1.5 | 0.3 | 0.33 |
| Soil B | | 0.00 | 3 | 0.2 | 0.32 |
| Soil C | 366747 | 78% | 6 | 0.1 | 0.31 |
| Soil D | 105999 | 22% | 9 | 0.025 | 0.3 |
| Total | 472746 | 100% | 6.673 | 0.083 | 0.308 |

**Basin 3A**

| | SF | % | Suction Head | Conductivity | Deficit |
|---|---|---|---|---|---|
| Soil A | | 0.00 | 1.5 | 0.3 | 0.33 |
| Soil B | | 0.00 | 3 | 0.2 | 0.32 |
| Soil C | 128776 | 0.97 | 6 | 0.1 | 0.31 |
| Soil D | 3520 | 0.03 | 9 | 0.025 | 0.3 |
| Total | 132296 | 100 | 6.080 | 0.098 | 0.310 |

0.0735

**Basin 3B**

| | SF | % | Suction Head | Conductivity | Deficit |
|---|---|---|---|---|---|
| Soil A | | 0.00 | 1.5 | 0.3 | 0.33 |
| Soil B | | 0.00 | 3 | 0.2 | 0.32 |
| Soil C | 52600 | 1.00 | 6 | 0.1 | 0.31 |
| Soil D | | 0.00 | 9 | 0.025 | 0.3 |
| Total | 52600 | 100 | 6.00 | 0.10 | 0.31 |

0.075

**Basin 3C**

| | SF | % | Suction Head | Conductivity | Deficit |
|---|---|---|---|---|---|
| Soil A | | 0.00 | 1.5 | 0.3 | 0.33 |
| Soil B | | 0.00 | 3 | 0.2 | 0.32 |
| Soil C | 385552 | 1.00 | 6 | 0.1 | 0.31 |
| Soil D | | 0.00 | 9 | 0.025 | 0.3 |
| Total | 385552 | 100 | 6.00 | 0.10 | 0.31 |

0.08

**DMA for Basin 3D**

| | SF | % | Suction Head | Conductivity | Deficit |
|---|---|---|---|---|---|
| Soil A | | 0.00 | 1.5 | 0.3 | 0.33 |
| Soil B | 7740.47 | 0.51 | 3 | 0.2 | 0.32 |
| Soil C | 7585.22 | 0.49 | 6 | 0.1 | 0.31 |
| Soil D | | 0.00 | 9 | 0.025 | 0.3 |
| Total | 15325.69 | 100 | 4.485 | 0.151 | 0.315 |

0.113

**Basin 3D**

| | SF | % | Suction He | Conductivi | Deficit |
|---|---|---|---|---|---|
| Soil A | 19350.02 | 0.00 | 1.5 | 0.3 | 0.33 |
| Soil B | 72488.57 | 0.12 | 3 | 0.2 | 0.32 |
| Soil C | 538319 | 0.85 | 6 | 0.1 | 0.31 |
| Soil D | | 0.00 | 9 | 0.025 | 0.3 |
| Total | 630157.6 | 100 | 5.471 | 0.108 | 0.302 |

0.081

**Bypass 3D**

| | SF | % | Suction He | Conductivi | Deficit |
|---|---|---|---|---|---|
| Soil A | 210327.81 | 0.00 | 1.5 | 0.3 | 0.33 |
| Soil B | 421614.19 | 0.34 | 3 | 0.2 | 0.32 |
| Soil C | 613608 | 0.49 | 6 | 0.1 | 0.31 |
| Soil D | 0 | 0.00 | 9 | 0.025 | 0.3 |
| Total | 1245550 | 100 | 3.971 | 0.117 | 0.261 |

0.088

**DMA 3D Pre**

| | SF | % | Suction He | Conductivi | Deficit |
|---|---|---|---|---|---|
| Soil A | 221252.3 | 0.00 | 1.5 | 0.3 | 0.33 |
| Soil B | 497312.6 | 0.29 | 3 | 0.2 | 0.32 |
| Soil C | 979345.1 | 0.58 | 6 | 0.1 | 0.31 |
| Soil D | | 0.00 | 9 | 0.025 | 0.3 |
| Total | 1697910 | 100 | 4.339 | 0.116 | 0.273 |

0.087

**DMA for Basin 3E**

| | SF | % | Suction Head | Conductivity | Deficit |
|---|---|---|---|---|---|
| Soil A | 7227 | 0.11 | 1.5 | 0.3 | 0.33 |
| Soil B | | 0.00 | 3 | 0.2 | 0.32 |
| Soil C | 55764 | 0.89 | 6 | 0.1 | 0.31 |
| Soil D | | 0.00 | 9 | 0.025 | 0.3 |
| Total | 62991 | 100 | 5.484 | 0.123 | 0.312 |

0.092

**Basin 3E**

| | SF | % | Suction He | Conductivi | Deficit |
|---|---|---|---|---|---|
| Soil A | | 0.00 | 1.5 | 0.3 | 0.33 |
| Soil B | | 0.00 | 3 | 0.2 | 0.32 |
| Soil C | 1600 | 1.00 | 6 | 0.1 | 0.31 |
| Soil D | | 0.00 | 9 | 0.025 | 0.3 |
| Total | 1600 | 100 | 6.000 | 0.100 | 0.310 |

0.075

**Basin 3F**

| | SF | % | suction Head | Cond | Deficit |
|---|---|---|---|---|---|
| Soil A | 14924.3 | 0.236 | 1.5 | 0.3 | 0.33 |
| Soil B | 15360.3 | 0.243 | 3 | 0.2 | 0.32 |
| Soil C | 5963.4 | 0.094 | 6 | 0.1 | 0.31 |
| Soil | 26924.6 | 0.426 | 9 | 0.025 | 0.3 |
| Total | 63223 | 100 | 5.482 | 0.139 | 0.313 |

**Basin 3F**

| | SF | % | suction He | Cond | Deficit |
|---|---|---|---|---|---|
| Soil A | 1662 | 1.000 | 1.5 | 0.3 | 0.33 |
| Soil B | | 0.000 | 3 | 0.2 | 0.32 |
| Soil C | | 0.000 | 6 | 0.1 | 0.31 |
| Soil | | 0.000 | 9 | 0.025 | 0.3 |
| Total | 1662 | 100 | 1.500 | 0.300 | 0.330 |

0.105

**DMA for Basin 3G**

| | SF | % | Suction Head | Conductivity | Deficit |
|---|---|---|---|---|---|
| Soil A | | 0.000 | 1.5 | 0.3 | 0.33 |
| Soil B | 55715 | 0.594 | 3 | 0.2 | 0.32 |
| Soil C | 18178 | 0.194 | 6 | 0.1 | 0.31 |
| Soil D | 19908 | 0.212 | 9 | 0.025 | 0.3 |
| Total | 93801 | 100 | 4.855 | 0.143 | 0.314 |

0.108

**DMA for Basin 3H**

| | SF | % | Suction Head | Conductivity | Deficit |
|---|---|---|---|---|---|
| Soil A | | 0 | 1.5 | 0.3 | 0.33 |
| Soil B | | 0 | 3 | 0.2 | 0.32 |
| Soil C | 69635 | 1 | 6 | 0.1 | 0.31 |
| Soil D | | 0 | 9 | 0.025 | 0.3 |
| Total | 69635 | 100 | 6 | 0.1 | 0.31 |

0.075

**Basin 3I**

| | SF | % | Suction Head | Conductivity | Deficit |
|---|---|---|---|---|---|
| Soil A | | 0 | 1.5 | 0.3 | 0.33 |
| Soil B | 23183 | 0.12 | 3 | 0.2 | 0.32 |
| Soil C | 178374 | 0.88 | 6 | 0.1 | 0.31 |
| Soil D | 0 | 0 | 9 | 0.025 | 0.3 |
| Total | 201557 | 100 | 5.655 | 0.112 | 0.311 |

0.084

**Basin 3J**

| | SF | % | Suction Head | Conductivity | Deficit |
|---|---|---|---|---|---|
| Soil A | | 0 | 1.5 | 0.3 | 0.33 |
| Soil B | | 0 | 3 | 0.2 | 0.32 |
| Soil C | 197523 | 1 | 6 | 0.1 | 0.31 |
| Soil D | | 0 | 9 | 0.025 | 0.3 |
| Total | 197523 | 100 | 6 | 0.1 | 0.31 |

0.075

0.225

**Basin 3G**

| | SF | % | Suction He | Conductivi | Deficit |
|---|---|---|---|---|---|
| Soil A | | 0.000 | 1.5 | 0.3 | 0.33 |
| Soil B | 1852 | 1.000 | 3 | 0.2 | 0.32 |
| Soil C | | 0.000 | 6 | 0.1 | 0.31 |
| Soil D | | 0.000 | 9 | 0.025 | 0.3 |
| Total | 1852 | 100 | 3.000 | 0.200 | 0.320 |

0.150

**Existing Subcatchment 17 in 3H model**

| | SF | % | Suction He | Conductivi | Deficit |
|---|---|---|---|---|---|
| Soil A | | 0 | 1.5 | 0.3 | 0.33 |
| Soil B | | 0 | 3 | 0.2 | 0.32 |
| Soil C | 148942 | 1 | 6 | 0.1 | 0.31 |
| Soil D | | 0 | 9 | 0.025 | 0.3 |
| Total | 148942 | 100 | 6 | 0.1 | 0.31 |

0.075

**Existing Subcatchment 18(hillside) in 3H model**

| | SF | % | Suction He | Conductivi | Deficit |
|---|---|---|---|---|---|
| Soil A | | 0 | 1.5 | 0.3 | 0.33 |
| Soil B | | 0 | 3 | 0.2 | 0.32 |
| Soil C | 148942 | 1 | 6 | 0.1 | 0.31 |
| Soil D | | 0 | 9 | 0.025 | 0.3 |
| Total | 148942 | 100 | 6 | 0.1 | 0.31 |

0.075

**DMA 17for Basin 3I**

| pr | SF | % | Suction He | Conductivi | Deficit |
|---|---|---|---|---|---|
| Soil A | | 0 | 1.5 | 0.3 | 0.33 |
| Soil B | 23183 | 0.11502 | 3 | 0.2 | 0.32 |
| Soil C | 178374 | 0.88498 | 6 | 0.1 | 0.31 |
| Soil D | | 0 | 9 | 0.025 | 0.3 |
| Total | 201557 | 100 | 5.654941 | 0.111502 | 0.31115 |

0.084

# Manning's *n* Values for Overland Flow[1]

The BMP Design Manuals within the County of San Diego allow for a land surface description other than short prairie grass to be used for hydromodification BMP design only if documentation provided is consistent with Table A.6 of the SWMM 5 User's Manual.

In January 2016, the EPA released the SWMM Reference Manual Volume I – Hydrology (SWMM Hydrology Reference Manual). The SWMM Hydrology Reference Manual complements the SWMM 5 User's Manual by providing an in-depth description of the program's hydrologic components. Table 3-5 of the SWMM Hydrology Reference Manual expounds upon Table A.6 of the SWMM 5 User's Manual by providing Manning's *n* values for additional overland flow surfaces. Therefore, in order to provide SWMM users with a wider range of land surfaces suitable for local application and to provide Copermittees with confidence in the design parameters, we recommend using the values published by Yen and Chow in Table 3-5 of the EPA SWMM Reference Manual Volume I – Hydrology. The values are provided in the table below:

| **Overland Surface** | **Manning value (*n*)** |
|---|---|
| Smooth asphalt pavement | 0.010 |
| Smooth impervious surface | 0.011 |
| Tar and sand pavement | 0.012 |
| Concrete pavement | 0.014 |
| Rough impervious surface | 0.015 |
| Smooth bare packed soil | 0.017 |
| Moderate bare packed soil | 0.025 |
| Rough bare packed soil | 0.032 |
| Gravel soil | 0.025 |
| Mowed poor grass | 0.030 |
| Average grass, closely clipped sod | 0.040 |
| Pasture | 0.040 |
| Timberland | 0.060 |
| Dense grass | 0.060 |
| Shrubs and bushes | 0.080 |
| **Land Use** | |
| Business | 0.014 |
| Semibusiness | 0.022 |
| Industrial | 0.020 |
| Dense residential | 0.025 |
| Suburban residential | 0.030 |
| Parks and lawns | 0.040 |

[1]Content summarized from *Improving Accuracy in Continuous Simulation Modeling: Guidance for Selecting Pervious Overland Flow Manning's n Values in the San Diego Region* (TRWE, 2016).

Pre-development Conditions

POC 1A

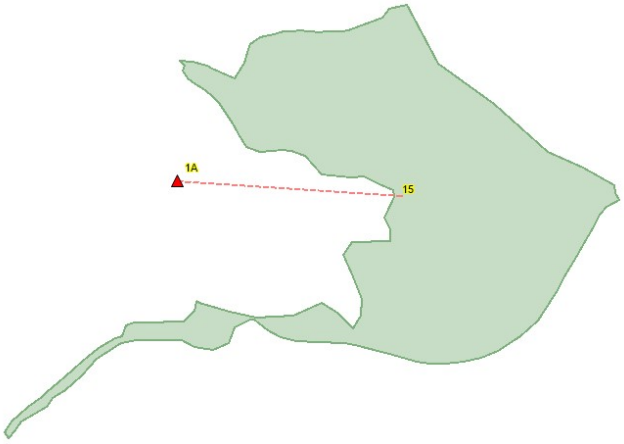


Subcatchments

| | Name | Rain Gage | Outlet | Area (ac) | Width (ft) | Flow Length (ft) | Slope (%) | Imperv. (%) | N Imperv | N Perv | Dstore Imperv (in) | Dstore Perv (in) | Zero Imperv (%) | Infiltration Method | Suction Head (in) | Conductivity (in/hr) | Initial Deficit (frac.) |
|---|---|---|---|---|---|---|---|---|---|---|---|---|---|---|---|---|---|
| ▸ | 15 | Fallbrook | 1A | 39.9 | 1319.045 | 1317.653 | 14.2 | 0 | 0.012 | 0.15 | 0.05 | 0.1 | 25 | GREEN_AMPT | 7.7 | 0.069 | 0.305 |

POC 1B

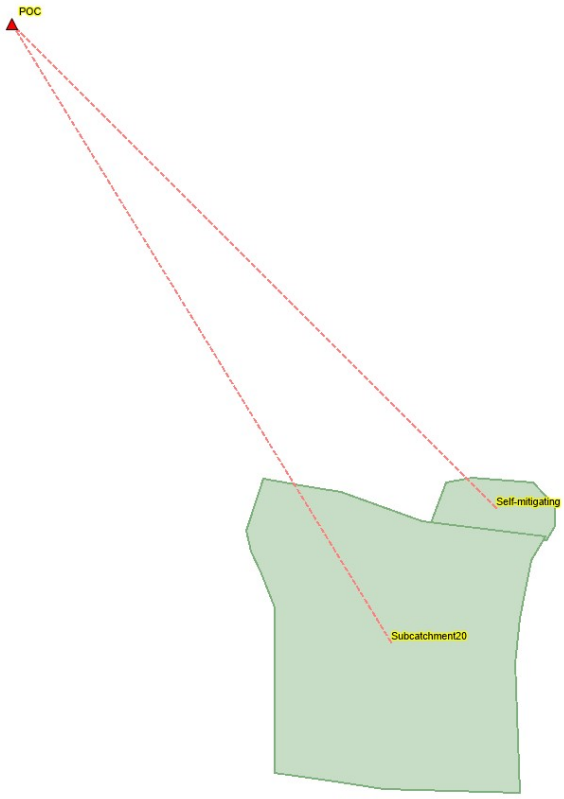


Subcatchments

| | Name | Rain Gage | Outlet | Area (ac) | Width (ft) | Flow Length (ft) | Slope (%) | Imperv. (%) | N Imperv | N Perv | Dstore Imperv (in) | Dstore Perv (in) | Zero Imperv (%) | Subarea Routing | Percent Routed (%) | Suction Head (in) | Conductivity (in/hr) | Initial Deficit (frac.) |
|---|---|---|---|---|---|---|---|---|---|---|---|---|---|---|---|---|---|---|
| ▸ | Self-mitigating | Fallbrook | POC | 0.43 | 215 | 87.12 | 41.6 | 0 | 0.012 | 0.15 | 0.05 | 0.1 | 25 | OUTLET | 100 | 3.041 | 0.199 | 0.32 |
| | Subcatchment20 | Fallbrook | POC | 7.47 | 704 | 462.206 | 6.65 | 13 | 0.012 | 0.15 | 0.05 | 0.1 | 25 | OUTLET | 100 | 3.041 | 0.199 | 0.32 |

POC 3A

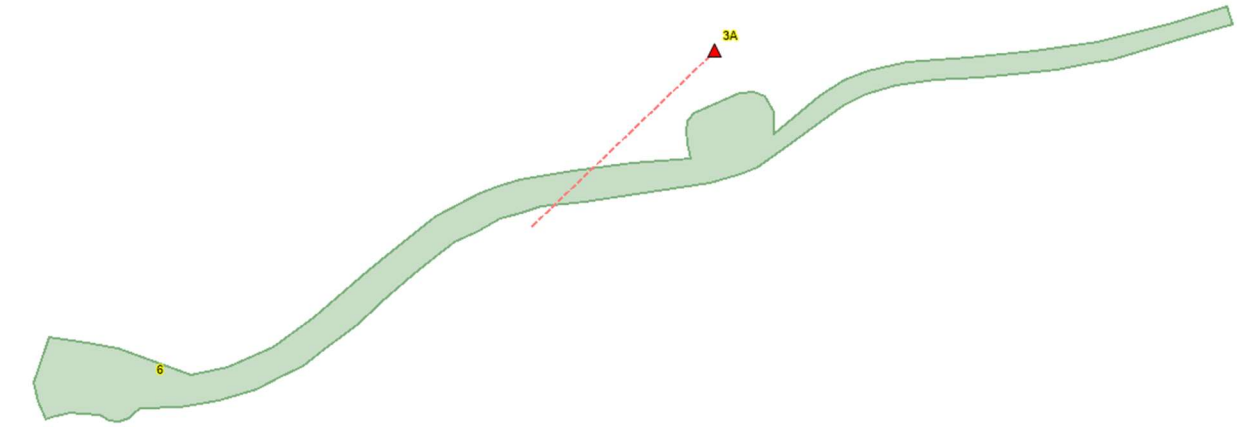


| | Name | Rain Gage | Outlet | Area (ac) | Width (ft) | Flow Length (ft) | Slope (%) | Imperv. (%) | N Imperv | N Perv | Dstore Imperv (in) | Dstore Perv (in) | Zero Imperv (%) | Subarea Routing | Percent Routed (%) | LID Controls | Infiltration Method | Suction Head (in) | Conductivity (in/hr) | Initial Deficit (frac.) |
|---|---|---|---|---|---|---|---|---|---|---|---|---|---|---|---|---|---|---|---|---|
| ▶ | 6 | Fallbrook | 3A | 3.04 | 625.985 | 211.542 | 21.2 | 0 | 0.012 | 0.15 | 0.05 | 0.1 | 25 | OUTLET | 100 | 0 | GREEN_AMPT | 6.1 | 0.098 | 0.31 |

POC 3B

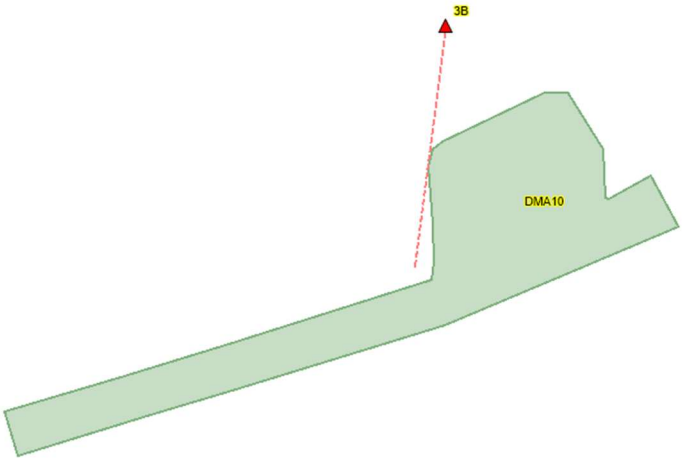


Subcatchments

| | Name | Rain Gage | Outlet | Area (ac) | Width (ft) | Flow Length (ft) | Slope (%) | Imperv. (%) | N Imperv | N Perv | Dstore Imperv (in) | Dstore Perv (in) | Zero Imperv (%) | Subarea Routing | Percent Routed (%) | Suction Head (in) | Conductivity (in/hr) | Initial Deficit (frac.) |
|---|---|---|---|---|---|---|---|---|---|---|---|---|---|---|---|---|---|---|
| ▶ | DMA10 | Fallbrook | 3B | 1.21 | 278.539 | 189.229 | 13.3 | 0 | 0.012 | 0.15 | 0.05 | 0.1 | 25 | OUTLET | 100 | 6 | 0.01 | 0.31 |

POC 3C

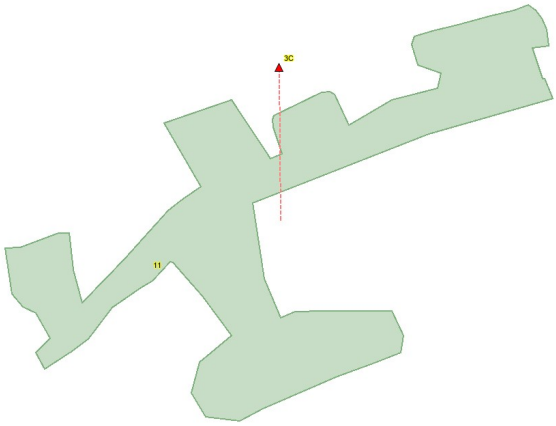


Subcatchments

| | Name | Width (ft) | Flow Length (ft) | Slope (%) | Imperv. (%) | N Imperv | N Perv | Dstore Imperv (in) | Dstore Perv (in) | Zero Imperv (%) | Subarea Routing | Percent Routed (%) | Curb Length | Infiltration Method | Suction Head (in) | Conductivity (in/hr) | Initial Deficit (frac.) |
|---|---|---|---|---|---|---|---|---|---|---|---|---|---|---|---|---|---|
| ▶ | 11 | 464.009 | 830.... | 4.16 | 0 | 0.012 | 0.15 | 0.05 | 0.1 | 25 | OUTLET | 100 | 0 | GREEN_AMPT | 6 | 0.1 | 0.31 |

POC 3D

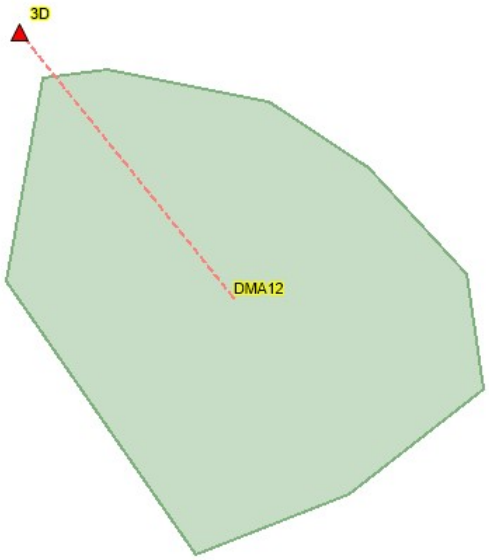


Subcatchments

| | Name | Rain Gage | Outlet | Area (ac) | Width (ft) | Flow Length (ft) | Slope (%) | Imperv. (%) | N Imperv | N Perv | Dstore Imperv (in) | Dstore Perv (in) | Zero Imperv (%) | Subarea Routing | LID ntrc | Infiltration Method | Suction Head (in) | Conductivity (in/hr) | Initial Deficit (frac.) |
|---|---|---|---|---|---|---|---|---|---|---|---|---|---|---|---|---|---|---|---|
| ▶ | DMA12 | Fallbro... | 3D | 38.98 | 1060 | 1601.857 | 8.4 | 0 | 0.012 | 0.15 | 0.05 | 0.1 | 25 | OUTLET | 0 | GREEN_AMPT | 4.339 | 0.116 | 0.273 |

POC 3E

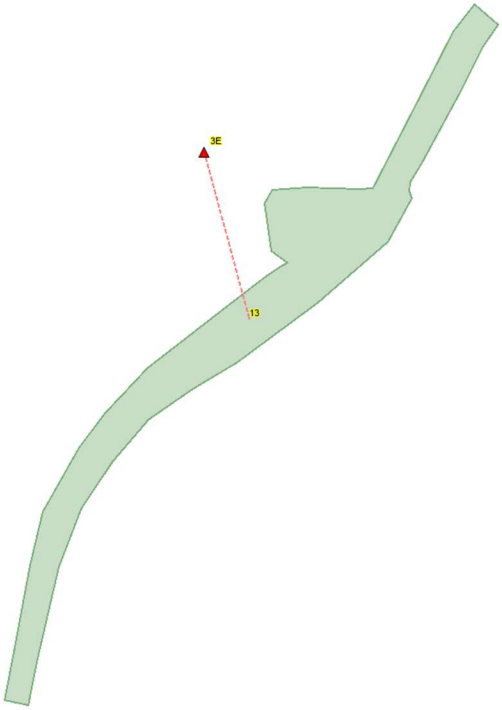


Subcatchments

| | Name | Rain Gage | Outlet | Area (ac) | Width (ft) | Flow Length (ft) | Slope (%) | Imperv. (%) | N Imperv | N Perv | Dstore Imperv (in) | Dstore Perv (in) | Zero Imperv (%) | Subarea Routing | Percent Routed (%) | Infiltration Method | Suction Head (in) | Conductivity (in/hr) | Initial Deficit (frac.) |
|---|---|---|---|---|---|---|---|---|---|---|---|---|---|---|---|---|---|---|---|
| ▶ | 13 | Fallbrook | 3E | 1.45 | 143.126 | 441.303 | 8.26 | 0 | 0.012 | 0.15 | 0.05 | 0.1 | 0 | OUTLET | 100 | GREEN_A... | 5.49 | 0.12 | 0.31 |

POC 3F

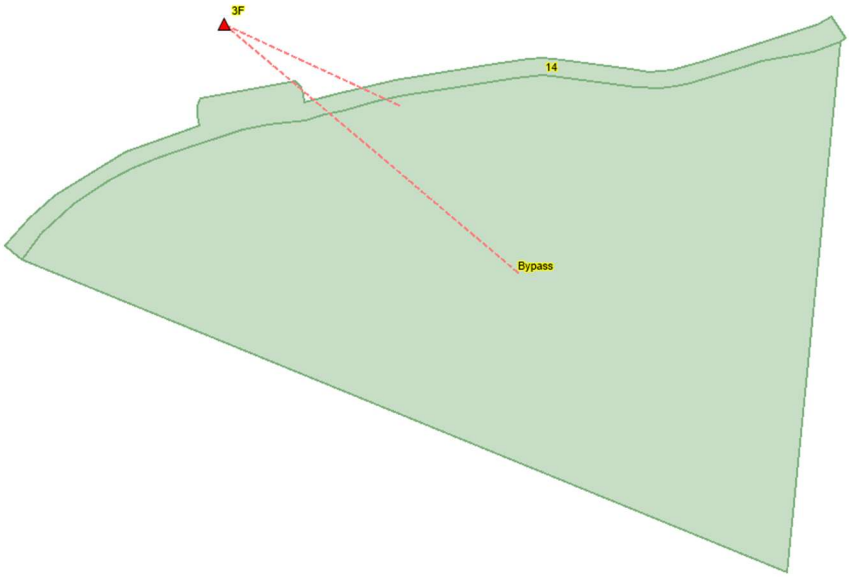


Subcatchments

| | Name | Rain Gage | Outlet | Area (ac) | Width (ft) | Flow Length (ft) | Slope (%) | Imperv. (%) | N Imperv | N Perv | Dstore Imperv (in) | Dstore Perv (in) | Zero Imperv (%) | Subarea Routing | Percent Routed (%) | Infiltration Method | Suction Head (in) | Conductivity (in/hr) | Initial Deficit (frac.) |
|---|---|---|---|---|---|---|---|---|---|---|---|---|---|---|---|---|---|---|---|
| ▶ | 14 | Fallbrook | 3F | 1.45 | 830.4... | 76.057 | 5.12 | 0 | 0.012 | 0.15 | 0.05 | 0.1 | 25 | OUTLET | 100 | GREEN_AMPT | 5.48 | 0.139 | 0.313 |
| | Bypass | Fallbrook | 3F | 6.09 | 788 | 336.65 | 46 | 0 | 0.012 | 0.15 | 0.05 | 0.1 | 25 | OUTLET | 100 | GREEN_AMPT | 9 | 0.025 | 0.3 |

POC 3G

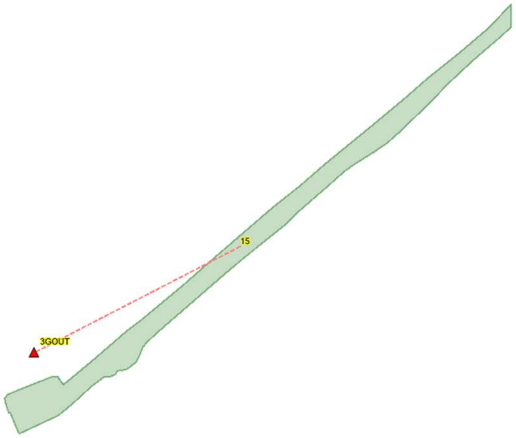


Subcatchments

| Name | Rain Gage | Outlet | Area (ac) | Width (ft) | Flow Length (ft) | Slope (%) | Imperv. (%) | N Imperv | N Perv | Dstore Imperv (in) | Dstore Perv (in) | Zero Imperv (%) | Subarea Routing | Percent Routed (%) | Suction Head (in) | Conductivity (in/hr) | Initial Deficit (frac.) |
|---|---|---|---|---|---|---|---|---|---|---|---|---|---|---|---|---|---|
| 15 | Fallbrook | 3GOUT | 2.15 | 926.223 | 101.114 | 18.9 | 0 | 0.012 | 0.15 | 0.05 | 0.1 | 25 | OUTLET | 100 | 4.86 | 0.143 | 0.314 |

POC 3H

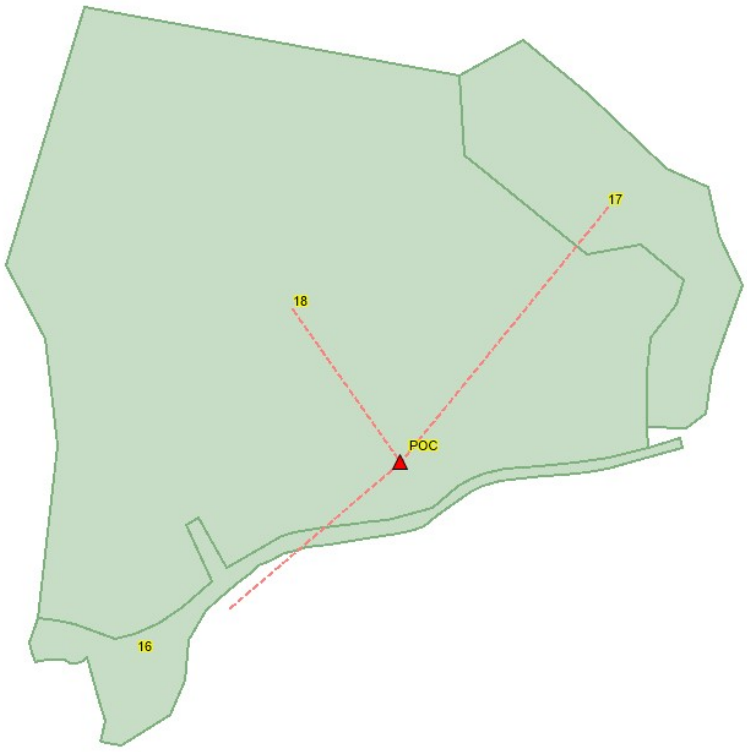


Subcatchments

| Name | Rain Gage | Outlet | Area (ac) | Width (ft) | Flow Length (ft) | Slope (%) | Imperv. (%) | N Imperv | N Perv | Dstore Imperv (in) | Dstore Perv (in) | Zero Imperv (%) | Subarea Routing | Percent Routed (%) | Infiltration Method | Suction Head (in) | Conductivity (in/hr) | Initial Deficit (frac.) |
|---|---|---|---|---|---|---|---|---|---|---|---|---|---|---|---|---|---|---|
| 16 | Fallbrook | POC | 1.97 | 164.525 | 521.582 | 15.1 | 8 | 0.012 | 0.15 | 0.05 | 0.1 | 25 | OUTLET | 100 | GREEN_AMPT | 6 | 0.1 | 0.31 |
| 17 | Fallbrook | POC | 3.47 | 235 | 643.205 | 15 | 0 | 0.012 | 0.15 | 0.05 | 0.1 | 25 | OUTLET | 100 | GREEN_AMPT | 5.69 | 0.11 | 0.311 |
| 18 | Fallbrook | POC | 17.08 | 600 | 1240.008 | 10 | 0 | 0.012 | 0.15 | 0.05 | 0.05 | 25 | OUTLET | 100 | GREEN_AMPT | 6 | 0.1 | 0.31 |

POC 3J

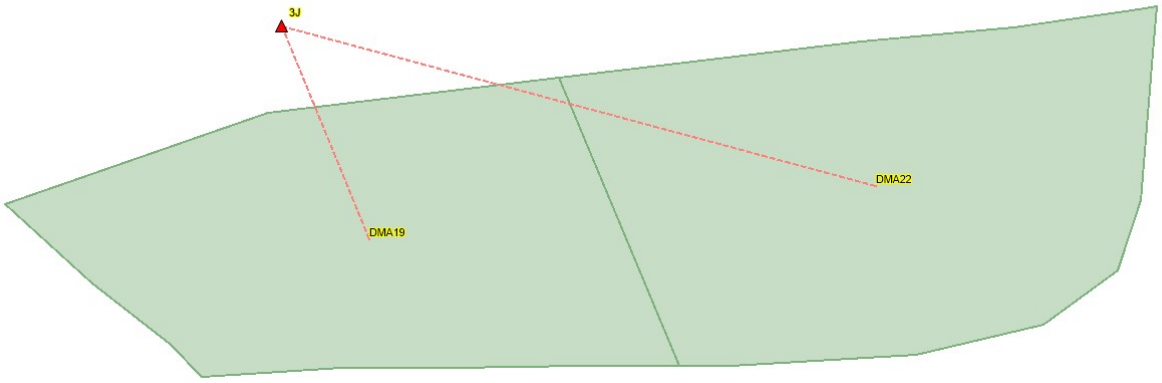


Subcatchments

| | Name | Rain Gage | Outlet | Area (ac) | Width (ft) | Flow Length (ft) | Slope (%) | Imperv. (%) | N Imperv | N Perv | Dstore Imperv (in) | Dstore Perv (in) | Zero Imperv (%) | Subarea Routing | Percent Routed (%) | Suction Head (in) | Conductivity (in/hr) | Initial Deficit (frac.) |
|---|---|---|---|---|---|---|---|---|---|---|---|---|---|---|---|---|---|---|
| ▸ | DMA19 | Fallbrook | 3J | 2.37 | 463 | 222.975 | 7.69 | 0 | 0.012 | 0.15 | 0.05 | 0.1 | 25 | OUTLET | 100 | 6 | 0.01 | 0.31 |
| | DMA22 | Fallbrook | 3J | 2.52 | 430 | 255.282 | 7.69 | 0 | 0.012 | 0.15 | 0.05 | 0.1 | 25 | OUTLET | 100 | 6 | 0.01 | 0.31 |

POC EQ Road

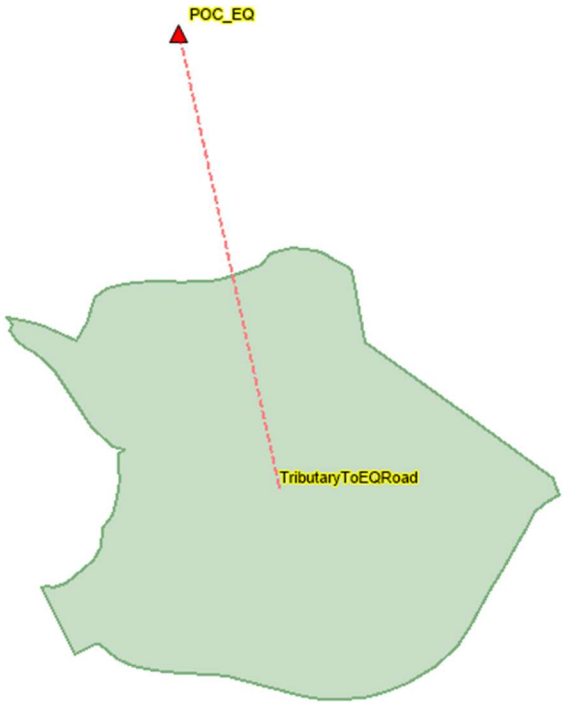


Subcatchments

| | Name | Rain Gage | Outlet | Area (ac) | Width (ft) | Flow Length (ft) | Slope (%) | Imperv. (%) | N Imperv | N Perv | Dstore Imperv (in) | Dstore Perv (in) | LID Controls | Infiltration Method | Suction Head (in) | Conductivity (in/hr) | Initial Deficit (frac.) |
|---|---|---|---|---|---|---|---|---|---|---|---|---|---|---|---|---|---|
| ▸ | TributaryToEQRoad | Fallbrook | POC_EQ | 375.94 | 5178 | 3162.601 | 25 | 0 | 0.012 | 0.15 | 0.05 | 0.1 | 0 | GREEN_AMPT | 7.582 | 0.07 | 0.305 |

Proposed Conditions

POC 1A

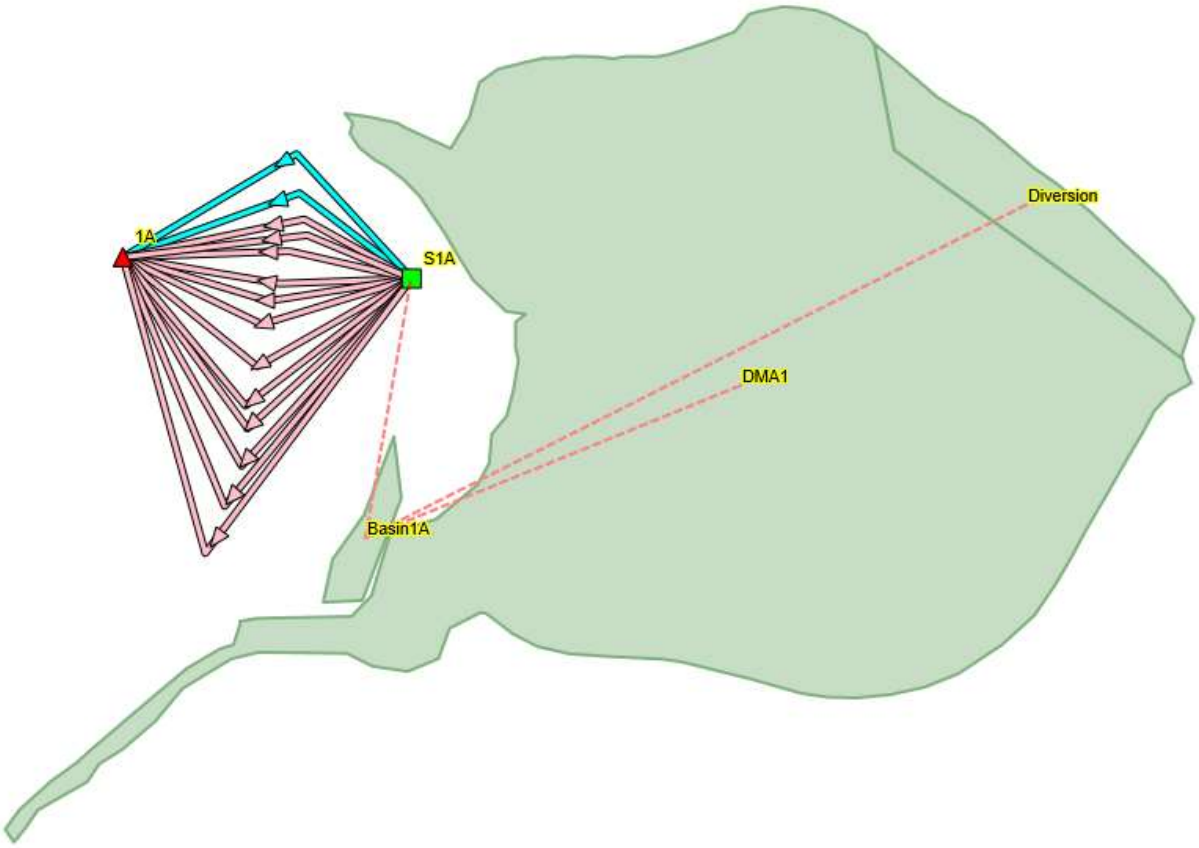


Subcatchments

| | Name | Rain Gage | Outlet | Area (ac) | Width (ft) | Flow Length (ft) | Slope (%) | Imperv. (%) | N Imperv | N Perv | Dstore Imperv (in) | Zero Imperv (%) | LID Controls | LID Names | Infiltration Method | Suction Head (in) | Conductivity (in/hr) | Initial Deficit (frac.) |
|---|---|---|---|---|---|---|---|---|---|---|---|---|---|---|---|---|---|---|
| ▶ | Basin1A | Fallbrook | S1A | 1.05 | 131 | 349.145 | 0.5 | 0 | 0.012 | 0.15 | 0.05 | 25 | 1 | LID1A | GREEN_AMPT | 4.375 | 0.14 | 0.318 |
| | Diversion | Fallbrook | BASIN1A | 9.07 | 1319 | 299.537 | 8.37 | 46.6 | 0.012 | 0.15 | 0.05 | 25 | 0 | | GREEN_AMPT | 7.582 | 0.07 | 0.305 |
| | DMA1 | Fallbrook | BASIN1A | 39.7 | 1402 | 1233.475 | 8.37 | 46.6 | 0.012 | 0.15 | 0.05 | 25 | 0 | | GREEN_AMPT | 7.582 | 0.07 | 0.305 |

POC 1B

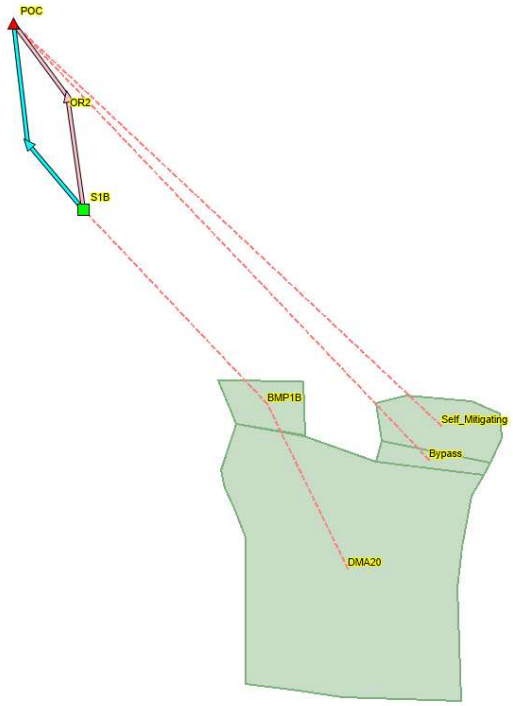


Subcatchments

| | Name | Rain Gage | Outlet | Area (ac) | Width (ft) | Flow Length (ft) | Slope (%) | Imperv. (%) | N Imperv | N Perv | Dstore Imperv (in) | Dstore Perv (in) | Zero Imperv (%) | Subarea Routing | Percent Routed (%) | LID Controls | LID Names | Infiltration Method | Suction Head (in) | Conductivity (in/hr) | Initial Deficit (frac.) |
|---|---|---|---|---|---|---|---|---|---|---|---|---|---|---|---|---|---|---|---|---|---|
| ▸ | BMP1B | Fallbrook | S1B | 0.21 | 100 | 91.476 | 1 | 0 | 0.012 | 0.15 | 0.05 | 0.1 | 25 | OUTLET | 100 | 1 | 1B | GREEN_AMPT | 4.548 | 0.155 | 0.315 |
| | Bypass | Fallbrook | POC | 0.08 | 33 | 105.6 | 1.5 | 76.7 | 0.012 | 0.15 | 0.05 | 0.1 | 25 | OUTLET | 100 | 0 | | GREEN_AMPT | 3 | 0.2 | 0.32 |
| | DMA20 | Fallbrook | BMP... | 7.05 | 704 | 436.219 | 6.65 | 15.3 | 0.012 | 0.15 | 0.05 | 0.1 | 25 | OUTLET | 100 | 0 | | GREEN_AMPT | 3 | 0.2 | 0.32 |
| | Self_Mitigating | Fallbrook | POC | 0.43 | 215 | 87.12 | 50 | 0 | 0.012 | 0.15 | 0.05 | 0.1 | 25 | OUTLET | 100 | 0 | | GREEN_AMPT | 3 | 0.2 | 0.32 |

POC 3A

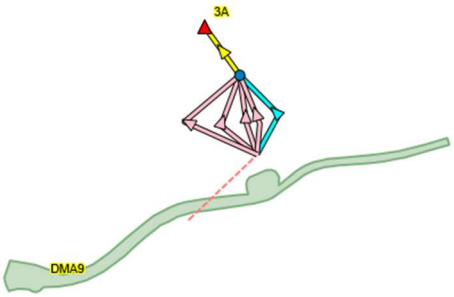


| | Name | Rain Gage | Outlet | Area (ac) | Width (ft) | Flow Length (ft) | Slope (%) | Imperv. (%) | N Imperv | N Perv | Dstore Imperv (in) | Dstore Perv (in) | Zero Imperv (%) | Subarea Routing | Percent Routed (%) | LID Controls | LID Names | Infiltration Method | Suction Head (in) | Conductivity (in/hr) | Initial Deficit (frac.) |
|---|---|---|---|---|---|---|---|---|---|---|---|---|---|---|---|---|---|---|---|---|---|
| ▸ | DMA9 | Fallbrook | S3A | 3.04 | 1005.683 | 131.674 | 2 | 45 | 0.012 | 0.15 | 0.05 | 0.1 | 25 | OUTLET | 100 | 1 | Basin3A | GREE... | 6.1 | 0.074 | 0.31 |

POC 3B

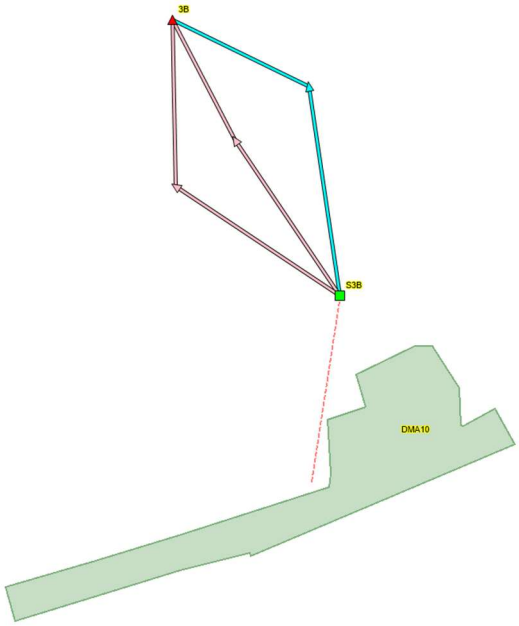


Subcatchments

| | Name | Rain Gage | Outlet | Area (ac) | Width (ft) | Flow Length (ft) | Slope (%) | Imperv. (%) | N Imperv | N Perv | Dstore Imperv (in) | Dstore Perv (in) | Zero Imperv (%) | Subarea Routing | Percent Routed (%) | LID Controls | LID Names | Suction Head (in) | Conductivity (in/hr) | Initial Deficit (frac.) |
|---|---|---|---|---|---|---|---|---|---|---|---|---|---|---|---|---|---|---|---|---|
| ▸ | DMA10 | Fallbrook | S3B | 1.21 | 50.939 | 1034.72 | 1.8 | 59.2 | 0.012 | 0.15 | 0.05 | 0.1 | 25 | OUTLET | 100 | 1 | 3B | 6 | 0.075 | 0.31 |

POC 3C

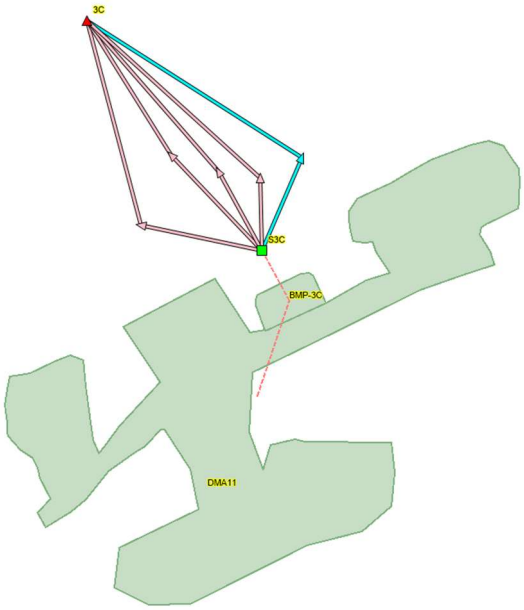


Subcatchments

| | Name | Rain Gage | Outlet | Area (ac) | Width (ft) | Flow Length (ft) | Slope (%) | Imperv. (%) | N Imperv | N Perv | Dstore Imperv (in) | Dstore Perv (in) | Zero Imperv (%) | Subarea Routing | Percent Routed (%) | LID Controls | LID Names | Infiltration Method | Suction Head (in) | Conductivity (in/hr) | Initial Deficit (frac.) |
|---|---|---|---|---|---|---|---|---|---|---|---|---|---|---|---|---|---|---|---|---|---|
| ▶ | BMP-3C | Fallbrook | S3C | 0.167 | 818.53 | 8.887 | 2.5 | 0 | 0.012 | 0.15 | 0.05 | 0.1 | 25 | OUTLET | 100 | 1 | 3C | GREEN_AMPT | 6 | 0.075 | 0.31 |
| | DMA11 | Fallbrook | BMP-3C | 8.683 | 818.53 | 462.086 | 2.5 | 23 | 0.012 | 0.15 | 0.05 | 0.1 | 25 | OUTLET | 100 | 0 | | GREEN_AMPT | 6 | 0.075 | 0.31 |

POC 3D

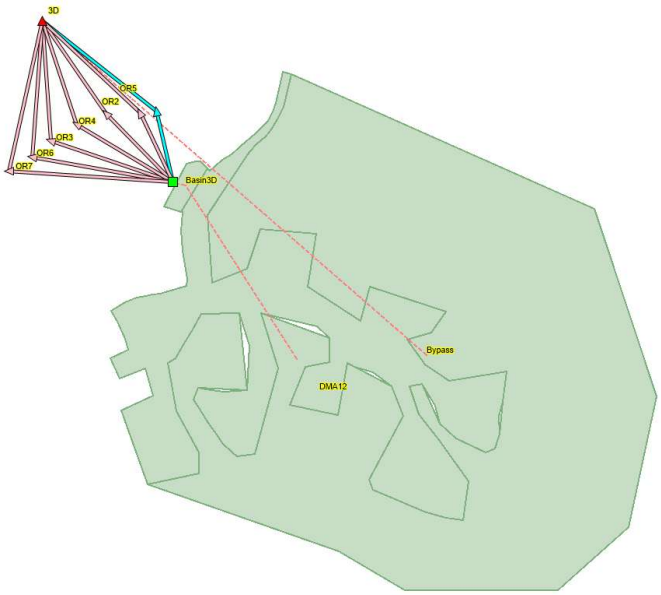


Subcatchments

| | Name | Rain Gage | Outlet | Area (ac) | Width (ft) | Flow Length (ft) | Slope (%) | Imperv. (%) | N Imperv | N Perv | Dstore Imperv (in) | Dstore Perv (in) | Zero Imperv (%) | Subarea Routing | Percent Routed (%) | LID Controls | LID Names | Infiltration Method | Suction Head (in) | Conductivity (in/hr) | Initial Deficit (frac.) |
|---|---|---|---|---|---|---|---|---|---|---|---|---|---|---|---|---|---|---|---|---|---|
| ▶ | Basin3D | Fallbrook | S3D | 0.3518 | 175 | 87.568 | 0.5 | 0 | 0.012 | 0.15 | 0.05 | 0.1 | 25 | OUTLET | 100 | 1 | LID1 | GREEN_AMPT | 4.485 | 0.151 | 0.315 |
| | Bypass | Fallbrook | 3D | 28.59 | 260 | 4789.925 | 5.5 | 0 | 0.012 | 0.15 | 0.05 | 0.1 | 25 | OUTLET | 100 | 0 | | GREEN_AMPT | 3.971 | 0.117 | 0.261 |
| | DMA12 | Fallbrook | Basin3D | 14.46 | 200 | 3149.388 | 3.7 | 32 | 0.012 | 0.15 | 0.05 | 0.1 | 25 | OUTLET | 100 | 0 | | GREEN_AMPT | 5.471 | 0.108 | 0.302 |

POC 3E

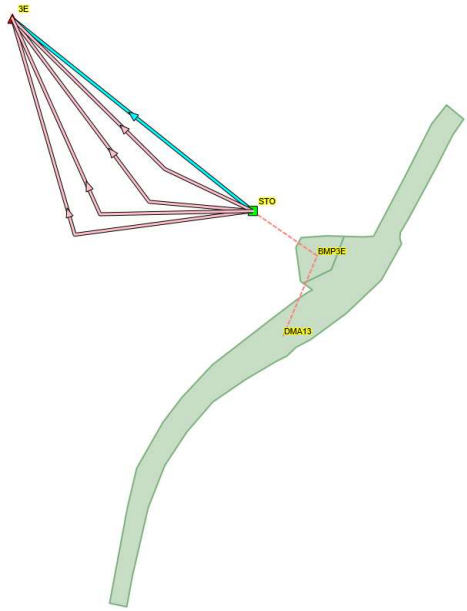


Subcatchments

| | Name | Rain Gage | Outlet | Area (ac) | Width (ft) | Flow Length (ft) | Slope (%) | Imperv. (%) | N Imperv | N Perv | Dstore Imperv (in) | Dstore Perv (in) | Zero Imperv (%) | Subarea Routing | Percent Routed (%) | Infiltration Method | Suction Head (in) | Conductivity (in/hr) | Initial Deficit (frac.) |
|---|---|---|---|---|---|---|---|---|---|---|---|---|---|---|---|---|---|---|---|
| ▶ | BMP3E | Fallbrook | STO | 0.037 | 1.08099 | 1490.967 | 2.55 | 0 | 0.012 | 0.15 | 0.05 | 0.1 | 25 | OUTLET | 100 | GREEN_AMPT | 6 | 0.075 | 0.31 |
| | DMA13 | Fallbrook | BMP3E | 1.409 | 89 | 689.618 | 2.55 | 58 | 0.012 | 0.15 | 0.05 | 0.1 | 25 | OUTLET | 100 | GREEN_AMPT | 5.48 | 0.092 | 0.312 |

POC 3F

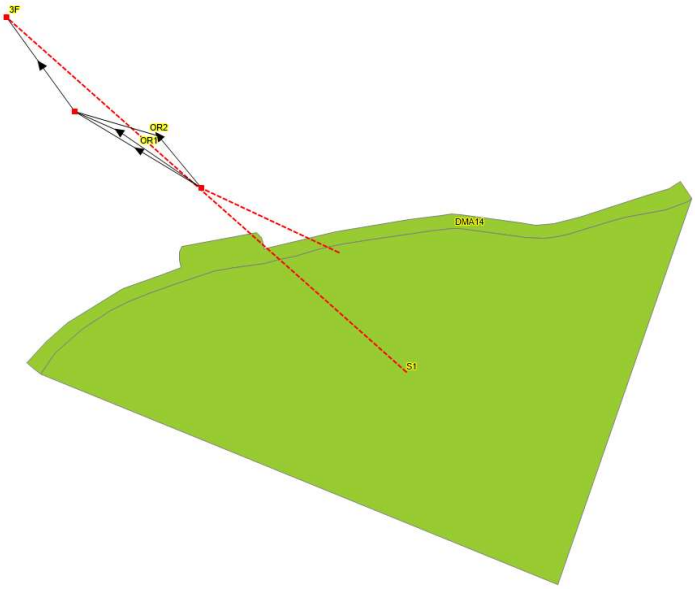


Subcatchments

| | Name | Rain Gage | Outlet | Area (ac) | Width (ft) | Flow Length (ft) | Slope (%) | Imperv. (%) | N Imperv | N Perv | Dstore Imperv (in) | Dstore Perv (in) | Subarea Routing | LID Controls | LID Names | Infiltration Method | Suction Head (in) | Conductivity (in/hr) | Initial Deficit (frac.) |
|---|---|---|---|---|---|---|---|---|---|---|---|---|---|---|---|---|---|---|---|
| ▶ | DMA14 | Fallbrook | S3f | 1.46 | 38 | 1673.621 | 1.5 | 86.9 | 0.012 | 0.15 | 0.05 | 0.1 | OUTLET | 1 | LID1 | GREEN_A... | 5.48 | 0.105 | 0.313 |
| | S1 | Fallbrook | 3F | 6.09 | 714 | 371.541 | 47.3 | 0 | 0.012 | 0.15 | 0.05 | 0.1 | OUTLET | 0 | | GREEN_A... | 9 | 0.025 | 0.31 |

POC 3G

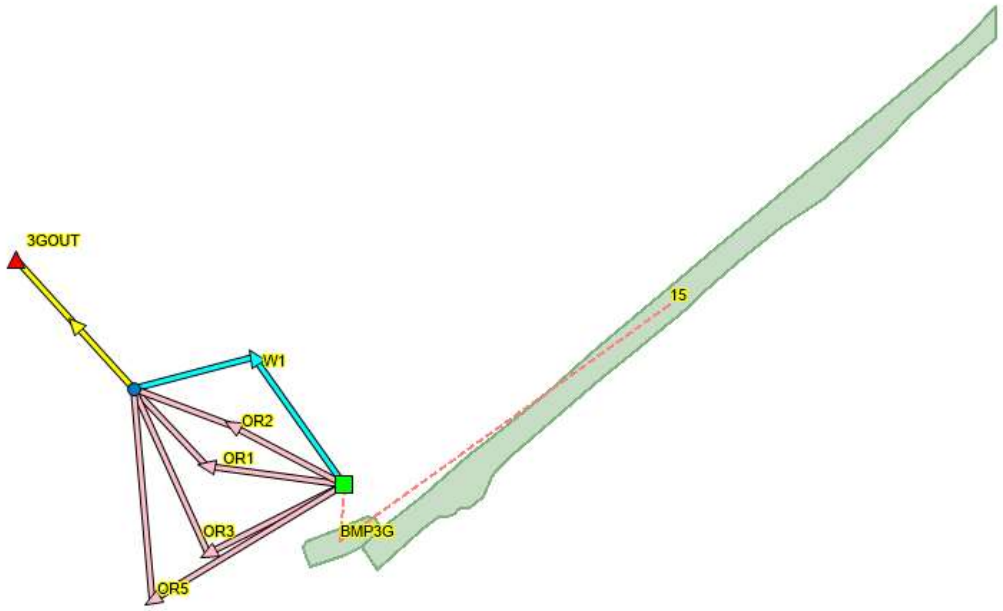


Subcatchments

| | Name | Rain Gage | Outlet | Area (ac) | Width (ft) | Flow Length (ft) | Slope (%) | Imperv. (%) | N Imperv | N Perv | Dstore Imperv (in) | Dstore Perv (in) | Zero Imperv (%) | Subarea Routing | Percent Routed (%) | LID Controls | LID Names | Infiltration Method | Suction Head (in) | Conductivity (in/hr) | Initial Deficit (frac.) |
|---|---|---|---|---|---|---|---|---|---|---|---|---|---|---|---|---|---|---|---|---|---|
| ▸ | 15 | Fallbrook | bmp3G | 2.11 | 60.696 | 1514.294 | 1.76 | 54.5 | 0.012 | 0.15 | 0.05 | 0.1 | 25 | OUTLET | 100 | 0 | | GREEN_AMPT | 4.86 | 0.108 | 0.314 |
| | BMP3G | Fallbrook | 3G | 0.042... | 17.816 | 103.961 | 0.1 | 0 | 0.012 | 0.15 | 0.05 | 0.1 | 25 | OUTLET | 100 | 1 | 3G | GREEN_AMPT | 3 | 0.15 | 0.32 |

POC 3H

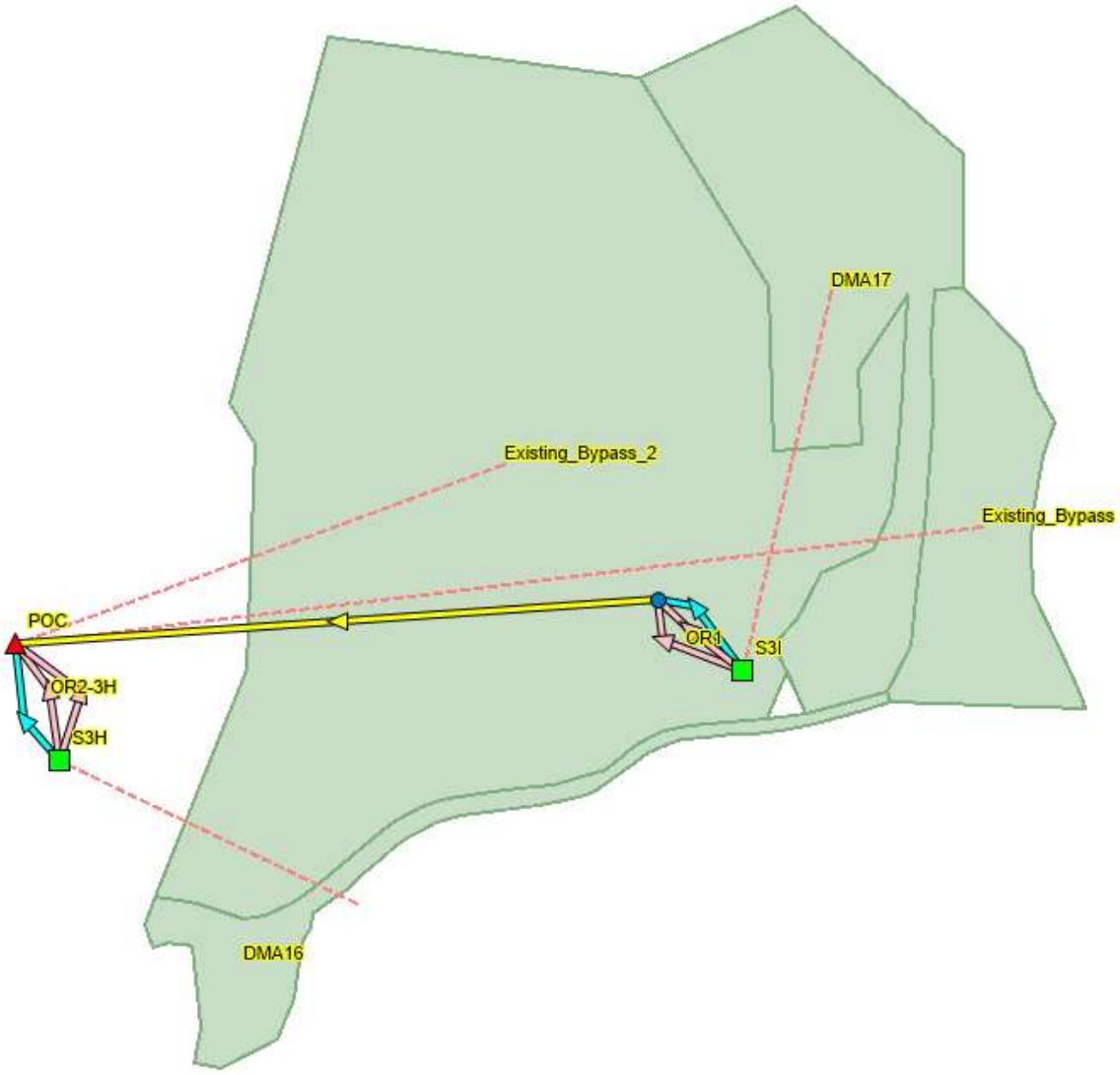


| | Name | Rain Gage | Outlet | Area (ac) | Width (ft) | Flow Length (ft) | Slope (%) | Imperv. (%) | N Imperv | N Perv | Dstore Imperv (in) | Dstore Perv (in) | Zero Imperv (%) | Subarea Routing | Percent Routed (%) | LID Controls | LID Names | Infiltration Method | Suction Head (in) | Conductivity (in/hr) | Initial Deficit (frac.) |
|---|---|---|---|---|---|---|---|---|---|---|---|---|---|---|---|---|---|---|---|---|---|
| ▸ | DMA16 | Fallbrook | S3H | 1.6 | 55.339 | 1259.437 | 6.65 | 51.1 | 0.012 | 0.15 | 0.05 | 0.1 | 25 | OUTLET | 100 | 1 | 3H | GREEN_AMPT | 6 | 0.1 | 0.3 |
| | DMA17 | Fallbrook | S3I | 4.63 | 233 | 865.591 | 0.5 | 15 | 0.012 | 0.15 | 0.05 | 0.1 | 25 | OUTLET | 100 | 1 | 3I | GREEN_AMPT | 5.65 | 0.11 | 0.311 |
| | Existing_Bypass | Fallbrook | POC | 2.27 | 205 | 482.347 | 6.8 | 43 | 0.012 | 0.15 | 0.05 | 0.1 | 25 | OUTLET | 100 | 0 | | GREEN_AMPT | 5.95 | 0.1 | 0.31 |
| | Existing_Bypass_2 | Fallbrook | POC | 17.2 | 600 | 1248.72 | 10 | 0 | 0.012 | 0.15 | 0.05 | 0.1 | 25 | OUTLET | 100 | 0 | | GREEN_AMPT | 6 | 0.1 | 0.3 |

POC 3J

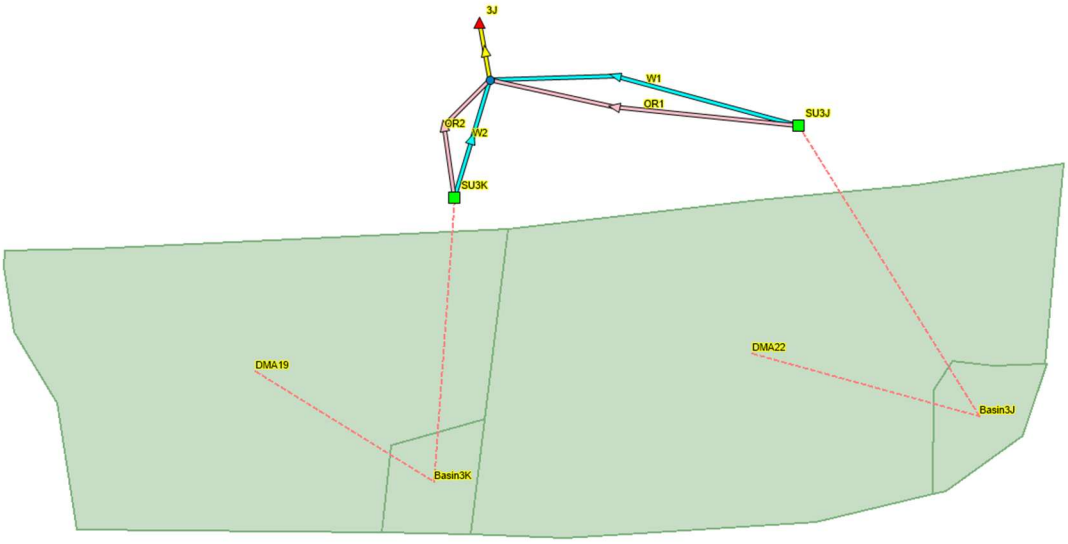


Subcatchments

| Name | Rain Gage | Outlet | Area (ac) | Width (ft) | Flow Length (ft) | Slope (%) | Imperv. (%) | N Imperv | N Perv | Dstore Imperv (in) | Dstore Perv (in) | Zero Imperv (%) | Subarea Routing | Percent Routed (%) | LID Controls | LID Names | Suction Head (in) | Conductivity (in/hr) | Initial Deficit (frac.) |
|---|---|---|---|---|---|---|---|---|---|---|---|---|---|---|---|---|---|---|---|
| Basin3J | Fallbrook | SU3J | 0.061 | 118 | 22.518 | 1 | 0 | 0.012 | 0.15 | 0.05 | 0.1 | 25 | OUTLET | 100 | 1 | 3J | 6 | 0.075 | 0.31 |
| Basin3K | Fallbrook | SU3K | 0.06 | 500 | 5.227 | 1 | 0 | 0.012 | 0.15 | 0.05 | 0.1 | 25 | OUTLET | 100 | 1 | 3K | 6 | 0.075 | 0.31 |
| DMA19 | Fallbrook | Basin3K | 2.46 | 175 | 612.329 | 1 | 10 | 0.012 | 0.15 | 0.05 | 0.1 | 25 | OUTLET | 100 | 0 | | 6 | 0.075 | 0.31 |
| DMA22 | Fallbrook | Basin3J | 2.309 | 325 | 309.477 | 1 | 11 | 0.012 | 0.15 | 0.05 | 0.1 | 25 | OUTLET | 100 | 0 | | 6 | 0.075 | 0.31 |

POC EQ Road

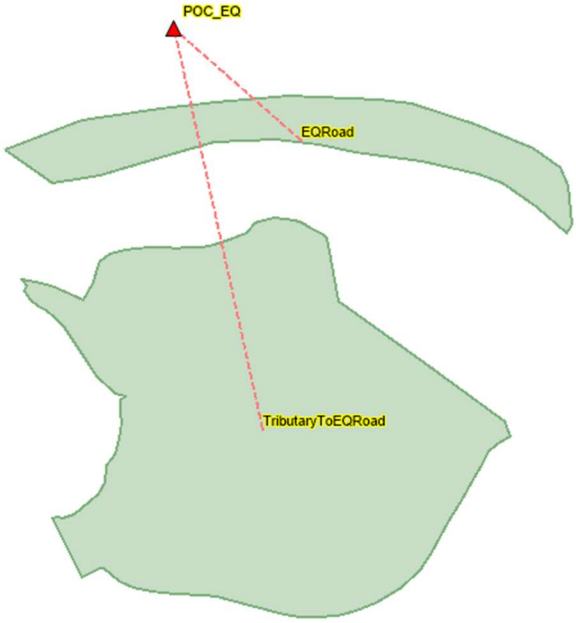


Subcatchments

| Name | Outlet | Area (ac) | Width (ft) | Flow Length (ft) | Slope (%) | Imperv. (%) | N Imperv | N Perv | Dstore Imperv (in) | Dstore Perv (in) | Zero Imperv (%) | Subarea Routing | Percent Routed (%) | LID Controls | Infiltration Method | Suction Head (in) | Conductivity (in/hr) | Initial Deficit (frac.) |
|---|---|---|---|---|---|---|---|---|---|---|---|---|---|---|---|---|---|---|
| EQRoad | POC_EQ | 4.49 | 1200 | 162.987 | 1 | 100 | 0.012 | 0.15 | 0.05 | 0.1 | 25 | OUTLET | 100 | 0 | GREEN_A... | 7.582 | 0.052 | 0.305 |
| TributaryToEQRoad | POC_EQ | 371.45 | 5138 | 3149.156 | 25 | 0 | 0.012 | 0.15 | 0.05 | 0.1 | 25 | OUTLET | 100 | 0 | GREEN_A... | 7.582 | 0.07 | 0.305 |

# SWMM Flow Coefficient Calculation

**SWMM Model Flow Coefficient Calculation**

Basin 1A

| PARAMETER | ABBREV. | Bio-Retention Cell | |
|---|---|---|---|
| Ponding Depth | PD | 9 | in |
| Bioretention Soil Layer | S | 21 | in |
| Gravel Layer | G | 15 | in |
| TOTAL | | 3.8 | ft |
| | | 45 | in |
| Orifice Coefficient | $c_g$ | 0.6 | -- |
| Low Flow Orifice Diameter | D | 7 | in |
| Drain exponent | n | 0.5 | -- |
| Flow Rate (volumetric) | Q | 2.393 | cfs |
| Ponding Depth Surface Area | $A_{PD}$ | 49238 | $ft^2$ |
| Bioretention Surface Area | $A_S$, $A_G$ | 45538 | $ft^2$ |
| | $A_S$, $A_G$ | 1.0454 | ac |
| Porosity of Bioretention Soil | n | 1.00 | - |
| Flow Rate (per unit area) | q | 2.270 | in/hr |
| Effective Ponding Depth | $PD_{eff}$ | **9.37** | in |
| Flow Coefficient | C | **0.3524** | -- |

**SWMM Model Flow Coefficient Calculation**

Basin 1B

| PARAMETER | ABBREV. | Bio-Retention Cell | |
|---|---|---|---|
| Ponding Depth | PD | 9 | in |
| Bioretention Soil Layer | S | 21 | in |
| Gravel Layer | G | 15 | in |
| TOTAL | | 3.8 | ft |
| | | 45 | in |
| Orifice Coefficient | $c_g$ | 0.6 | -- |
| Low Flow Orifice Diameter | D | 1.5 | in |
| Drain exponent | n | 0.5 | -- |
| Flow Rate (volumetric) | Q | 0.113 | cfs |
| Ponding Depth Surface Area | $A_{PD}$ | 3263 | $ft^2$ |
| Bioretention Surface Area | $A_S$, $A_G$ | 2615 | $ft^2$ |
| | $A_S$, $A_G$ | 0.0600 | ac |
| Porosity of Bioretention Soil | n | 1.00 | - |
| Flow Rate (per unit area) | q | 1.874 | in/hr |
| Effective Ponding Depth | $PD_{eff}$ | **10.12** | in |
| Flow Coefficient | C | **0.2818** | -- |

**SWMM Model Flow Coefficient Calculation**

Basin 2H

| PARAMETER | ABBREV. | Bio-Retention Cell | |
|---|---|---|---|
| Ponding Depth | PD | 9 | in |
| Bioretention Soil Layer | S | 21 | in |
| Gravel Layer | G | 15 | in |
| TOTAL | | 3.8 | ft |
| | | 45 | in |
| Orifice Coefficient | $c_g$ | 0.6 | -- |
| Low Flow Orifice Diameter | D | 2 | in |
| Drain exponent | n | 0.5 | -- |
| Flow Rate (volumetric) | Q | 0.201 | cfs |
| Ponding Depth Surface Area | $A_{PD}$ | 10118 | $ft^2$ |
| Bioretention Surface Area | $A_S$, $A_G$ | 9160 | $ft^2$ |
| | $A_S$, $A_G$ | 0.2103 | ac |
| Porosity of Bioretention Soil | n | 1.00 | - |
| Flow Rate (per unit area) | q | 0.949 | in/hr |
| Effective Ponding Depth | $PD_{eff}$ | **9.47** | in |
| Flow Coefficient | C | **0.1430** | -- |

**SWMM Model Flow Coefficient Calculation**

Basin 3A

| PARAMETER | ABBREV. | Bio-Retention Cell | |
|---|---|---|---|
| Ponding Depth | PD | 9 | in |
| Bioretention Soil Layer | S | 21 | in |
| Gravel Layer | G | 15 | in |
| TOTAL | | 3.8 | ft |
| | | 45 | in |
| Orifice Coefficient | $c_g$ | 0.6 | -- |
| Low Flow Orifice Diameter | D | 3 | in |
| Drain exponent | n | 0.5 | -- |
| Flow Rate (volumetric) | Q | 0.450 | cfs |
| Ponding Depth Surface Area | $A_{PD}$ | 2912 | $ft^2$ |
| Bioretention Surface Area | $A_S$, $A_G$ | 2422 | $ft^2$ |
| | $A_S$, $A_G$ | 0.0556 | ac |
| Porosity of Bioretention Soil | n | 1.00 | - |
| Flow Rate (per unit area) | q | 5.000 | in/hr |
| Effective Ponding Depth | $PD_{eff}$ | **9.91** | in |
| Flow Coefficient | C | **0.7581** | -- |

**SWMM Model Flow Coefficient Calculation**

Basin 3B

| PARAMETER | ABBREV. | Bio-Retention Cell | |
|---|---|---|---|
| Ponding Depth | PD | 9 | in |
| Bioretention Soil Layer | S | 21 | in |
| Gravel Layer | G | 15 | in |
| TOTAL | | 3.8 | ft |
| | | 45 | in |
| Orifice Coefficient | $c_g$ | 0.6 | -- |
| Low Flow Orifice Diameter | D | 2 | in |
| Drain exponent | n | 0.5 | -- |
| Flow Rate (volumetric) | Q | 0.201 | cfs |
| Ponding Depth Surface Area | $A_{PD}$ | 3886 | $ft^2$ |
| Bioretention Surface Area | $A_S, A_G$ | 3361 | $ft^2$ |
| | $A_S, A_G$ | 0.0772 | ac |
| Porosity of Bioretention Soil | n | 1.00 | - |
| Flow Rate (per unit area) | q | 2.585 | in/hr |
| Effective Ponding Depth | $PD_{eff}$ | **9.70** | in |
| Flow Coefficient | C | **0.3898** | -- |

**SWMM Model Flow Coefficient Calculation**

Basin 3C

| PARAMETER | ABBREV. | Bio-Retention Cell | |
|---|---|---|---|
| Ponding Depth | PD | 9 | in |
| Bioretention Soil Layer | S | 21 | in |
| Gravel Layer | G | 15 | in |
| TOTAL | | 3.8 | ft |
| | | 45 | in |
| Orifice Coefficient | $c_g$ | 0.6 | -- |
| Low Flow Orifice Diameter | D | 2 | in |
| Drain exponent | n | 0.5 | -- |
| Flow Rate (volumetric) | Q | 0.201 | cfs |
| Ponding Depth Surface Area | $A_{PD}$ | 8029 | $ft^2$ |
| Bioretention Surface Area | $A_S, A_G$ | 7232 | $ft^2$ |
| | $A_S, A_G$ | 0.1660 | ac |
| Porosity of Bioretention Soil | n | 1.00 | - |
| Flow Rate (per unit area) | q | 1.202 | in/hr |
| Effective Ponding Depth | $PD_{eff}$ | **9.50** | in |
| Flow Coefficient | C | **0.1811** | -- |

**SWMM Model Flow Coefficient Calculation**

Basin 3D

| PARAMETER | ABBREV. | Bio-Retention Cell | |
|---|---|---|---|
| Ponding Depth | PD | 9 | in |
| Bioretention Soil Layer | S | 21 | in |
| Gravel Layer | G | 15 | in |
| TOTAL | | 3.8 | ft |
| | | 45 | in |
| Orifice Coefficient | $c_g$ | 0.6 | -- |
| Low Flow Orifice Diameter | D | 1 | in |
| Drain exponent | n | 0.5 | -- |
| Flow Rate (volumetric) | Q | 0.051 | cfs |
| Ponding Depth Surface Area | $A_{PD}$ | 16500 | $ft^2$ |
| Bioretention Surface Area | $A_S, A_G$ | 15325 | $ft^2$ |
| | $A_S, A_G$ | 0.3518 | ac |
| Porosity of Bioretention Soil | n | 1.00 | - |
| Flow Rate (per unit area) | q | 0.143 | in/hr |
| Effective Ponding Depth | $PD_{eff}$ | **9.35** | in |
| Flow Coefficient | C | **0.0214** | -- |

**SWMM Model Flow Coefficient Calculation**

Basin 3E

| PARAMETER | ABBREV. | Bio-Retention Cell | |
|---|---|---|---|
| Ponding Depth | PD | 9 | in |
| Bioretention Soil Layer | S | 21 | in |
| Gravel Layer | G | 15 | in |
| TOTAL | | 3.8 | ft |
| | | 45 | in |
| Orifice Coefficient | $c_g$ | 0.6 | -- |
| Low Flow Orifice Diameter | D | 0.6 | in |
| Drain exponent | n | 0.5 | -- |
| Flow Rate (volumetric) | Q | 0.018 | cfs |
| Ponding Depth Surface Area | $A_{PD}$ | 2069 | $ft^2$ |
| Bioretention Surface Area | $A_S, A_G$ | 1600 | $ft^2$ |
| | $A_S, A_G$ | 0.0367 | ac |
| Porosity of Bioretention Soil | n | 1.00 | - |
| Flow Rate (per unit area) | q | 0.493 | in/hr |
| Effective Ponding Depth | $PD_{eff}$ | **10.32** | in |
| Flow Coefficient | C | **0.0737** | -- |

## SWMM Model Flow Coefficient Calculation

Basin 3F

| PARAMETER | ABBREV. | Bio-Retention Cell | |
|---|---|---|---|
| Ponding Depth | PD | 9 | in |
| Bioretention Soil Layer | S | 21 | in |
| Gravel Layer | G | 15 | in |
| TOTAL | | 3.8 | ft |
| | | 45 | in |
| Orifice Coefficient | $c_g$ | 0.6 | -- |
| Low Flow Orifice Diameter | D | 0.6 | in |
| Drain exponent | n | 0.5 | -- |
| Flow Rate (volumetric) | Q | 0.018 | cfs |
| Ponding Depth Surface Area | $A_{PD}$ | 2207 | $ft^2$ |
| Bioretention Surface Area | $A_S, A_G$ | 1619 | $ft^2$ |
| | $A_S, A_G$ | 0.0372 | ac |
| Porosity of Bioretention Soil | n | 1.00 | - |
| Flow Rate (per unit area) | q | 0.487 | in/hr |
| Effective Ponding Depth | $PD_{eff}$ | **10.63** | in |
| Flow Coefficient | C | **0.0728** | -- |

## SWMM Model Flow Coefficient Calculation

Basin 3G

| PARAMETER | ABBREV. | Bio-Retention Cell | |
|---|---|---|---|
| Ponding Depth | PD | 9 | in |
| Bioretention Soil Layer | S | 21 | in |
| Gravel Layer | G | 15 | in |
| TOTAL | | 3.8 | ft |
| | | 45 | in |
| Orifice Coefficient | $c_g$ | 0.6 | -- |
| Low Flow Orifice Diameter | D | 1.2 | in |
| Drain exponent | n | 0.5 | -- |
| Flow Rate (volumetric) | Q | 0.073 | cfs |
| Ponding Depth Surface Area | $A_{PD}$ | 2425 | $ft^2$ |
| Bioretention Surface Area | $A_S, A_G$ | 1852 | $ft^2$ |
| | $A_S, A_G$ | 0.0425 | ac |
| Porosity of Bioretention Soil | n | 1.00 | - |
| Flow Rate (per unit area) | q | 1.697 | in/hr |
| Effective Ponding Depth | $PD_{eff}$ | **10.39** | in |
| Flow Coefficient | C | **0.2546** | -- |

## SWMM Model Flow Coefficient Calculation

Basin 3H

| PARAMETER | ABBREV. | Bio-Retention Cell | |
|---|---|---|---|
| Ponding Depth | PD | 9 | in |
| Bioretention Soil Layer | S | 21 | in |
| Gravel Layer | G | 15 | in |
| TOTAL | | 3.8 | ft |
| | | 45 | in |
| Orifice Coefficient | $c_g$ | 0.6 | -- |
| Low Flow Orifice Diameter | D | 2 | in |
| Drain exponent | n | 0.5 | -- |
| Flow Rate (volumetric) | Q | 0.201 | cfs |
| Ponding Depth Surface Area | $A_{PD}$ | 2265 | $ft^2$ |
| Bioretention Surface Area | $A_S, A_G$ | 1846 | $ft^2$ |
| | $A_S, A_G$ | 0.0424 | ac |
| Porosity of Bioretention Soil | n | 1.00 | - |
| Flow Rate (per unit area) | q | 4.707 | in/hr |
| Effective Ponding Depth | $PD_{eff}$ | **10.02** | in |
| Flow Coefficient | C | **0.7096** | -- |

## SWMM Model Flow Coefficient Calculation

Basin 3I

| PARAMETER | ABBREV. | Bio-Retention Cell | |
|---|---|---|---|
| Ponding Depth | PD | 9 | in |
| Bioretention Soil Layer | S | 21 | in |
| Gravel Layer | G | 15 | in |
| TOTAL | | 3.8 | ft |
| | | 45 | in |
| Orifice Coefficient | $c_g$ | 0.6 | -- |
| Low Flow Orifice Diameter | D | 4 | in |
| Drain exponent | n | 0.5 | -- |
| Flow Rate (volumetric) | Q | 0.795 | cfs |
| Ponding Depth Surface Area | $A_{PD}$ | 3678 | $ft^2$ |
| Bioretention Surface Area | $A_S, A_G$ | 2992 | $ft^2$ |
| | $A_S, A_G$ | 0.0687 | ac |
| Porosity of Bioretention Soil | n | 1.00 | - |
| Flow Rate (per unit area) | q | 5.000 | in/hr |
| Effective Ponding Depth | $PD_{eff}$ | **10.03** | in |
| Flow Coefficient | C | **0.7625** | -- |

**SWMM Model Flow Coefficient Calculation**

Basin 3J

| PARAMETER | ABBREV. | Bio-Retention Cell | |
|---|---|---|---|
| Ponding Depth | PD | 9 | in |
| Bioretention Soil Layer | S | 21 | in |
| Gravel Layer | G | 15 | in |
| TOTAL | | 3.8 | ft |
| | | 45 | in |
| Orifice Coefficient | $c_g$ | 0.6 | -- |
| Low Flow Orifice Diameter | D | 2 | in |
| Drain exponent | n | 0.5 | -- |
| Flow Rate (volumetric) | Q | 0.201 | cfs |
| Ponding Depth Surface Area | $A_{PD}$ | 3096 | $ft^2$ |
| Bioretention Surface Area | $A_S, A_G$ | 2628 | $ft^2$ |
| | $A_S, A_G$ | 0.0603 | ac |
| Porosity of Bioretention Soil | n | 1.00 | - |
| Flow Rate (per unit area) | q | 3.307 | in/hr |
| Effective Ponding Depth | $PD_{eff}$ | **9.80** | in |
| Flow Coefficient | C | **0.4985** | -- |

**SWMM Model Flow Coefficient Calculation**

Basin 3K

| PARAMETER | ABBREV. | Bio-Retention Cell | |
|---|---|---|---|
| Ponding Depth | PD | 9 | in |
| Bioretention Soil Layer | S | 21 | in |
| Gravel Layer | G | 15 | in |
| TOTAL | | 3.8 | ft |
| | | 45 | in |
| Orifice Coefficient | $c_g$ | 0.6 | -- |
| Low Flow Orifice Diameter | D | 2 | in |
| Drain exponent | n | 0.5 | -- |
| Flow Rate (volumetric) | Q | 0.201 | cfs |
| Ponding Depth Surface Area | $A_{PD}$ | 2968 | $ft^2$ |
| Bioretention Surface Area | $A_S, A_G$ | 2512 | $ft^2$ |
| | $A_S, A_G$ | 0.0577 | ac |
| Porosity of Bioretention Soil | n | 1.00 | - |
| Flow Rate (per unit area) | q | 3.459 | in/hr |
| Effective Ponding Depth | $PD_{eff}$ | **9.82** | in |
| Flow Coefficient | C | **0.5215** | -- |

# Attachment 3

## SWMM Output – Existing Conditions

EPA STORM WATER MANAGEMENT MODEL - VERSION 5.2 (Build 5.2.3)
---

Pre Condition 1A

**********
Element Count
**********
Number of rain gages ..... 1
Number of subcatchments ... 1
Number of nodes ..... 1
Number of links ..... 0
Number of pollutants ..... 0
Number of land uses ..... 0

**********
Raingage Summary
**********

| Name | Data Source | Data Type | Recording Interval |
|---|---|---|---|
| Fallbrook | FallbrookHourly | INTENSITY | 60 min. |

**********
Subcatchment Summary
**********

| Name | Area | Width | %Imperv | %Slope | Rain Gage | Outlet |
|---|---|---|---|---|---|---|
| 15 | 39.90 | 1319.05 | 0.00 | 14.2000 | Fallbrook | 1A |

**********
Node Summary
**********

| Name | Type | Invert Elev. | Max. Depth | Ponded Area | External Inflow |
|---|---|---|---|---|---|
| 1A | OUTFALL | 0.00 | 0.00 | 0.0 | |

**********
Analysis Options
**********
Flow Units ..... CFS
Process Models:
  Rainfall/Runoff ..... YES
  RDII ..... NO
  Snowmelt ..... NO
  Groundwater ..... NO
  Flow Routing ..... NO
  Water Quality ..... NO
Infiltration Method ..... GREEN_AMPT
Surcharge Method ..... EXTRAN
Starting Date ..... 07/25/1951 04:00:00
Ending Date ..... 05/26/2008 08:00:00
Antecedent Dry Days ..... 0.0
Report Time Step ..... 01:00:00
Wet Time Step ..... 00:30:00
Dry Time Step ..... 00:30:00

| Runoff Quantity Continuity | Volume acre-feet | Depth inches |
|---|---|---|
| Total Precipitation ..... | 2897.405 | 871.400 |
| Evaporation Loss ..... | 31.417 | 9.449 |
| Infiltration Loss ..... | 2550.867 | 767.178 |
| Surface Runoff ..... | 328.893 | 98.915 |
| Final Storage ..... | 0.000 | 0.000 |
| Continuity Error (%) ..... | -0.475 | |

| Flow Routing Continuity | Volume acre-feet | Volume 10^6 gal |
|---|---|---|
| Dry Weather Inflow ..... | 0.000 | 0.000 |
| Wet Weather Inflow ..... | 328.893 | 107.175 |
| Groundwater Inflow ..... | 0.000 | 0.000 |
| RDII Inflow ..... | 0.000 | 0.000 |
| External Inflow ..... | 0.000 | 0.000 |
| External Outflow ..... | 328.893 | 107.175 |
| Flooding Loss ..... | 0.000 | 0.000 |
| Evaporation Loss ..... | 0.000 | 0.000 |
| Exfiltration Loss ..... | 0.000 | 0.000 |
| Initial Stored Volume .... | 0.000 | 0.000 |
| Final Stored Volume ..... | 0.000 | 0.000 |
| Continuity Error (%) ..... | 0.000 | |

**********
Subcatchment Runoff Summary
**********

| Subcatchment | Total Precip in | Total Runon in | Total Evap in | Total Infil in | Imperv Runoff in | Perv Runoff in | Total Runoff in | Total Runoff 10^6 gal | Peak Runoff CFS | Runoff Coeff |
|---|---|---|---|---|---|---|---|---|---|---|
| 15 | 871.40 | 0.00 | 9.45 | 767.18 | 0.00 | 98.92 | 98.92 | 107.17 | 49.89 | 0.114 |

Analysis begun on:  Mon Sep 16 08:05:40 2024
Analysis ended on:  Mon Sep 16 08:06:04 2024
Total elapsed time: 00:00:24

EPA STORM WATER MANAGEMENT MODEL - VERSION 5.1 (Build 5.1.015)
---
Pre Condition 2H

**********
Element Count
**********
Number of rain gages ..... 1
Number of subcatchments ... 1
Number of nodes ..... 1
Number of links ..... 0
Number of pollutants ..... 0
Number of land uses ..... 0

**********
Raingage Summary
**********

| Name | Data Source | Data Type | Recording Interval |
|---|---|---|---|
| Fallbrook | FallbrookHourly | INTENSITY | 60 min. |

**********
Subcatchment Summary
**********

| Name | Area | Width | %Imperv | %Slope | Rain Gage | Outlet |
|---|---|---|---|---|---|---|
| 18 | 25.23 | 400.00 | 0.00 | 18.0000 | Fallbrook | 2H |

**********
Node Summary
**********

| Name | Type | Invert Elev. | Max. Depth | Ponded Area | External Inflow |
|---|---|---|---|---|---|
| 2H | OUTFALL | 0.00 | 0.00 | 0.0 | |

**********
NOTE: The summary statistics displayed in this report are
based on results found at every computational time step,
not just on results from each reporting time step.
**********

**********
Analysis Options
**********
Flow Units ..... CFS
Process Models:
  Rainfall/Runoff ..... YES
  RDII ..... NO
  Snowmelt ..... NO
  Groundwater ..... NO
  Flow Routing ..... NO
  Water Quality ..... NO
Infiltration Method ..... GREEN_AMPT
Surcharge Method ..... EXTRAN
Starting Date ..... 07/25/1951 04:00:00
Ending Date ..... 05/26/2008 08:00:00
Antecedent Dry Days ..... 0.0
Report Time Step ..... 01:00:00
Wet Time Step ..... 00:30:00
Dry Time Step ..... 00:30:00

| Runoff Quantity Continuity | Volume acre-feet | Depth inches |
|---|---|---|
| Total Precipitation ..... | 1832.118 | 871.400 |
| Evaporation Loss ..... | 23.431 | 11.144 |
| Infiltration Loss ..... | 1547.006 | 735.794 |
| Surface Runoff ..... | 277.753 | 132.106 |
| Final Storage ..... | 0.000 | 0.000 |
| Continuity Error (%) ..... | -0.877 | |

| Flow Routing Continuity | Volume acre-feet | Volume 10^6 gal |
|---|---|---|
| Dry Weather Inflow ..... | 0.000 | 0.000 |
| Wet Weather Inflow ..... | 277.753 | 90.510 |
| Groundwater Inflow ..... | 0.000 | 0.000 |
| RDII Inflow ..... | 0.000 | 0.000 |
| External Inflow ..... | 0.000 | 0.000 |
| External Outflow ..... | 277.753 | 90.510 |
| Flooding Loss ..... | 0.000 | 0.000 |
| Evaporation Loss ..... | 0.000 | 0.000 |
| Exfiltration Loss ..... | 0.000 | 0.000 |
| Initial Stored Volume .... | 0.000 | 0.000 |
| Final Stored Volume ..... | 0.000 | 0.000 |

Continuity Error (%) .....         0.000

**************************
Subcatchment Runoff Summary
**************************

| Subcatchment | Total Precip in | Total Runon in | Total Evap in | Total Infil in | Imperv Runoff in | Perv Runoff in | Total Runoff in | Total Runoff 10^6 gal | Peak Runoff CFS | Runoff Coeff |
|---|---|---|---|---|---|---|---|---|---|---|
| 18 | 871.40 | 0.00 | 11.14 | 735.79 | 0.00 | 132.11 | 132.11 | 90.50 | 33.27 | 0.152 |

Analysis begun on:  Wed May  8 14:56:49 2024
Analysis ended on:  Wed May  8 14:57:16 2024
Total elapsed time: 00:00:27

EPA STORM WATER MANAGEMENT MODEL - VERSION 5.1 (Build 5.1.015)
---

Pre Condition DMA 3A

**********
Element Count
**********
Number of rain gages ..... 1
Number of subcatchments ... 1
Number of nodes ..... 1
Number of links ..... 0
Number of pollutants ..... 0
Number of land uses ..... 0

**********
Raingage Summary
**********

| Name | Data Source | Data Type | Recording Interval |
|---|---|---|---|
| Fallbrook | FallbrookHourly | INTENSITY | 60 min. |

**********
Subcatchment Summary
**********

| Name | Area | Width | %Imperv | %Slope | Rain Gage | Outlet |
|---|---|---|---|---|---|---|
| 6 | 3.04 | 625.99 | 0.00 | 21.2000 | Fallbrook | 3A |

**********
Node Summary
**********

| Name | Type | Invert Elev. | Max. Depth | Ponded Area | External Inflow |
|---|---|---|---|---|---|
| 3A | OUTFALL | 0.00 | 0.00 | 0.0 | |

**********
NOTE: The summary statistics displayed in this report are
based on results found at every computational time step,
not just on results from each reporting time step.
**********

**********
Analysis Options
**********
Flow Units ..... CFS
Process Models:
  Rainfall/Runoff ..... YES
  RDII ..... NO
  Snowmelt ..... NO
  Groundwater ..... NO
  Flow Routing ..... NO
  Water Quality ..... NO
Infiltration Method ..... GREEN_AMPT
Surcharge Method ..... EXTRAN
Starting Date ..... 07/25/1951 04:00:00
Ending Date ..... 05/26/2008 08:00:00
Antecedent Dry Days ..... 0.0
Report Time Step ..... 01:00:00
Wet Time Step ..... 00:30:00
Dry Time Step ..... 00:30:00

| Runoff Quantity Continuity | Volume acre-feet | Depth inches |
|---|---|---|
| Total Precipitation ..... | 220.755 | 871.400 |
| Evaporation Loss ..... | 1.424 | 5.620 |
| Infiltration Loss ..... | 198.074 | 781.869 |
| Surface Runoff ..... | 23.634 | 93.292 |
| Final Storage ..... | 0.000 | 0.000 |
| Continuity Error (%) ..... | -1.077 | |

| Flow Routing Continuity | Volume acre-feet | Volume 10^6 gal |
|---|---|---|
| Dry Weather Inflow ..... | 0.000 | 0.000 |
| Wet Weather Inflow ..... | 23.634 | 7.701 |
| Groundwater Inflow ..... | 0.000 | 0.000 |
| RDII Inflow ..... | 0.000 | 0.000 |
| External Inflow ..... | 0.000 | 0.000 |
| External Outflow ..... | 23.634 | 7.701 |
| Flooding Loss ..... | 0.000 | 0.000 |
| Evaporation Loss ..... | 0.000 | 0.000 |
| Exfiltration Loss ..... | 0.000 | 0.000 |
| Initial Stored Volume .... | 0.000 | 0.000 |
| Final Stored Volume ..... | 0.000 | 0.000 |

Continuity Error (%) .....  0.000

**************************
Subcatchment Runoff Summary
**************************

| Subcatchment | Total Precip in | Total Runon in | Total Evap in | Total Infil in | Imperv Runoff in | Perv Runoff in | Total Runoff in | Total Runoff 10^6 gal | Peak Runoff CFS | Runoff Coeff |
|---|---|---|---|---|---|---|---|---|---|---|
| 6 | 871.40 | 0.00 | 5.62 | 781.87 | 0.00 | 93.29 | 93.29 | 7.70 | 3.89 | 0.107 |

Analysis begun on:  Sun May 26 08:44:52 2024
Analysis ended on:  Sun May 26 08:45:07 2024
Total elapsed time: 00:00:15

EPA STORM WATER MANAGEMENT MODEL - VERSION 5.1 (Build 5.1.015)
---
Pre Project 3B

**********
Element Count
**********
Number of rain gages ..... 1
Number of subcatchments ... 1
Number of nodes ..... 1
Number of links ..... 0
Number of pollutants ..... 0
Number of land uses ..... 0

**********
Raingage Summary
**********

| Name | Data Source | Data Type | Recording Interval |
|---|---|---|---|
| Fallbrook | FallbrookHourly | INTENSITY | 60 min. |

**********
Subcatchment Summary
**********

| Name | Area | Width | %Imperv | %Slope | Rain Gage | Outlet |
|---|---|---|---|---|---|---|
| DMA10 | 1.21 | 278.54 | 0.00 | 13.3000 | Fallbrook | 3B |

**********
Node Summary
**********

| Name | Type | Invert Elev. | Max. Depth | Ponded Area | External Inflow |
|---|---|---|---|---|---|
| 3B | OUTFALL | 0.00 | 0.00 | 0.0 | |

**********
NOTE: The summary statistics displayed in this report are
based on results found at every computational time step,
not just on results from each reporting time step.
**********

**********
Analysis Options
**********
Flow Units ..... CFS
Process Models:
  Rainfall/Runoff ..... YES
  RDII ..... NO
  Snowmelt ..... NO
  Groundwater ..... NO
  Flow Routing ..... NO
  Water Quality ..... NO
Infiltration Method ..... GREEN_AMPT
Surcharge Method ..... EXTRAN
Starting Date ..... 07/25/1951 04:00:00
Ending Date ..... 05/26/2008 08:00:00
Antecedent Dry Days ..... 0.0
Report Time Step ..... 01:00:00
Wet Time Step ..... 00:30:00
Dry Time Step ..... 00:30:00

| Runoff Quantity Continuity | Volume acre-feet | Depth inches |
|---|---|---|
| Total Precipitation ..... | 87.866 | 871.400 |
| Evaporation Loss ..... | 5.340 | 52.956 |
| Infiltration Loss ..... | 40.910 | 405.715 |
| Surface Runoff ..... | 43.561 | 432.011 |
| Final Storage ..... | 0.000 | 0.000 |
| Continuity Error (%) ..... | -2.213 | |

| Flow Routing Continuity | Volume acre-feet | Volume 10^6 gal |
|---|---|---|
| Dry Weather Inflow ..... | 0.000 | 0.000 |
| Wet Weather Inflow ..... | 43.561 | 14.195 |
| Groundwater Inflow ..... | 0.000 | 0.000 |
| RDII Inflow ..... | 0.000 | 0.000 |
| External Inflow ..... | 0.000 | 0.000 |
| External Outflow ..... | 43.561 | 14.195 |
| Flooding Loss ..... | 0.000 | 0.000 |
| Evaporation Loss ..... | 0.000 | 0.000 |
| Exfiltration Loss ..... | 0.000 | 0.000 |
| Initial Stored Volume .... | 0.000 | 0.000 |
| Final Stored Volume ..... | 0.000 | 0.000 |

Continuity Error (%) .....         0.000

**************************
Subcatchment Runoff Summary
**************************

| Subcatchment | Total Precip in | Total Runon in | Total Evap in | Total Infil in | Imperv Runoff in | Perv Runoff in | Total Runoff in | Total Runoff 10^6 gal | Peak Runoff CFS | Runoff Coeff |
|---|---|---|---|---|---|---|---|---|---|---|
| DMA10 | 871.40 | 0.00 | 52.96 | 405.72 | 0.00 | 432.01 | 432.01 | 14.19 | 1.69 | 0.496 |

Analysis begun on:  Fri Jun 16 07:10:05 2023
Analysis ended on:  Fri Jun 16 07:10:26 2023
Total elapsed time: 00:00:21

EPA STORM WATER MANAGEMENT MODEL - VERSION 5.2 (Build 5.2.3)
--------------------------------------------------------------
Pre POC 3C

*************
Element Count
*************
Number of rain gages ...... 1
Number of subcatchments ... 1
Number of nodes ........... 1
Number of links ........... 0
Number of pollutants ...... 0
Number of land uses ....... 0


***************
Raingage Summary
***************

| Name | Data Source | Data Type | Recording Interval |
|---|---|---|---|
| Fallbrook | FallbrookHourly | INTENSITY | 60 min. |


*******************
Subcatchment Summary
*******************

| Name | Area | Width | %Imperv | %Slope | Rain Gage | Outlet |
|---|---|---|---|---|---|---|
| 11 | 8.85 | 464.01 | 0.00 | 4.1600 | Fallbrook | 3C |


************
Node Summary
************

| Name | Type | Invert Elev. | Max. Depth | Ponded Area | External Inflow |
|---|---|---|---|---|---|
| 3C | OUTFALL | 0.00 | 0.00 | 0.0 | |


***************
Analysis Options
***************
Flow Units ..... CFS
Process Models:
  Rainfall/Runoff ..... YES
  RDII ..... NO
  Snowmelt ..... NO
  Groundwater ..... NO
  Flow Routing ..... NO
  Water Quality ..... NO
Infiltration Method ..... GREEN_AMPT
Surcharge Method ..... EXTRAN
Starting Date ..... 07/25/1951 04:00:00
Ending Date ..... 05/26/2008 08:00:00
Antecedent Dry Days ..... 0.0
Report Time Step ..... 01:00:00
Wet Time Step ..... 00:30:00
Dry Time Step ..... 00:30:00


| Runoff Quantity Continuity | Volume acre-feet | Depth inches |
|---|---|---|
| Total Precipitation ..... | 642.657 | 871.400 |
| Evaporation Loss ..... | 5.438 | 7.374 |
| Infiltration Loss ..... | 578.136 | 783.913 |
| Surface Runoff ..... | 61.627 | 83.562 |
| Final Storage ..... | 0.000 | 0.000 |
| Continuity Error (%) ..... | -0.396 | |


| Flow Routing Continuity | Volume acre-feet | Volume 10^6 gal |
|---|---|---|
| Dry Weather Inflow ..... | 0.000 | 0.000 |
| Wet Weather Inflow ..... | 61.627 | 20.082 |
| Groundwater Inflow ..... | 0.000 | 0.000 |
| RDII Inflow ..... | 0.000 | 0.000 |
| External Inflow ..... | 0.000 | 0.000 |
| External Outflow ..... | 61.627 | 20.082 |
| Flooding Loss ..... | 0.000 | 0.000 |
| Evaporation Loss ..... | 0.000 | 0.000 |
| Exfiltration Loss ..... | 0.000 | 0.000 |
| Initial Stored Volume .... | 0.000 | 0.000 |
| Final Stored Volume ..... | 0.000 | 0.000 |
| Continuity Error (%) ..... | 0.000 | |


**************************
Subcatchment Runoff Summary
**************************

| Subcatchment | Total Precip in | Total Runon in | Total Evap in | Total Infil in | Imperv Runoff in | Perv Runoff in | Total Runoff in | Total Runoff 10^6 gal | Peak Runoff CFS | Runoff Coeff |
|---|---|---|---|---|---|---|---|---|---|---|
| 11 | 871.40 | 0.00 | 7.37 | 783.91 | 0.00 | 83.56 | 83.56 | 20.08 | 10.88 | 0.096 |

Analysis begun on:  Tue Oct 29 08:52:00 2024
Analysis ended on:  Tue Oct 29 08:52:22 2024
Total elapsed time: 00:00:22

EPA STORM WATER MANAGEMENT MODEL - VERSION 5.2 (Build 5.2.4)
---

Pre Condition 3D

```
*************
Element Count
*************
Number of rain gages ...... 1
Number of subcatchments ... 1
Number of nodes ........... 1
Number of links ........... 0
Number of pollutants ...... 0
Number of land uses ....... 0


****************
Raingage Summary
****************
                                                 Data       Recording
Name                 Data Source                 Type       Interval
----------------------------------------------------------------------
Fallbrook            FallbrookHourly             INTENSITY   60 min.


********************
Subcatchment Summary
********************
Name                        Area     Width   %Imperv    %Slope Rain Gage            Outlet
-------------------------------------------------------------------------------------------------
DMA12                      38.98   1060.00      0.00    8.4000 Fallbrook            3D


************
Node Summary
************
                                      Invert      Max.    Ponded    External
Name                 Type                Elev.     Depth      Area    Inflow
-------------------------------------------------------------------------------
3D                   OUTFALL             0.00      0.00       0.0


****************
Analysis Options
****************
Flow Units ............... CFS
Process Models:
  Rainfall/Runoff ........ YES
  RDII ................... NO
  Snowmelt ............... NO
  Groundwater ............ NO
  Flow Routing ........... NO
  Water Quality .......... NO
Infiltration Method ...... GREEN_AMPT
Surcharge Method ......... EXTRAN
Starting Date ............ 07/25/1951 04:00:00
Ending Date .............. 05/26/2008 08:00:00
Antecedent Dry Days ...... 0.0
Report Time Step ......... 01:00:00
Wet Time Step ............ 00:30:00
Dry Time Step ............ 00:30:00


*************************        Volume         Depth
Runoff Quantity Continuity     acre-feet        inches
*************************     ---------       -------
Total Precipitation ......      2830.598       871.400
Evaporation Loss .........        22.769         7.009
Infiltration Loss ........      2592.365       798.060
Surface Runoff ...........       225.059        69.285
Final Storage ............         0.000         0.000
Continuity Error (%) .....        -0.339


*************************        Volume        Volume
Flow Routing Continuity        acre-feet      10^6 gal
*************************     ---------     ---------
Dry Weather Inflow .......         0.000         0.000
Wet Weather Inflow .......       225.059        73.339
Groundwater Inflow .......         0.000         0.000
RDII Inflow ..............         0.000         0.000
External Inflow ..........         0.000         0.000
External Outflow .........       225.059        73.339
```

| | | |
|---|---|---|
| Flooding Loss ..... | 0.000 | 0.000 |
| Evaporation Loss ..... | 0.000 | 0.000 |
| Exfiltration Loss ..... | 0.000 | 0.000 |
| Initial Stored Volume .... | 0.000 | 0.000 |
| Final Stored Volume ..... | 0.000 | 0.000 |
| Continuity Error (%) ..... | 0.000 | |

**********
Subcatchment Runoff Summary
**********

| Subcatchment | Total Precip in | Total Runon in | Total Evap in | Total Infil in | Imperv Runoff in | Perv Runoff in | Total Runoff in | Total Runoff 10^6 gal | Peak Runoff CFS | Runoff Coeff |
|---|---|---|---|---|---|---|---|---|---|---|
| DMA12 | 871.40 | 0.00 | 7.01 | 798.06 | 0.00 | 69.28 | 69.28 | 73.33 | 45.59 | 0.080 |

Analysis begun on:  Tue May 28 16:48:22 2024
Analysis ended on:  Tue May 28 16:48:40 2024
Total elapsed time: 00:00:18

EPA STORM WATER MANAGEMENT MODEL - VERSION 5.2 (Build 5.2.3)
---

Pre Condition 3E

**********
Element Count
**********
Number of rain gages ..... 1
Number of subcatchments ... 1
Number of nodes ..... 1
Number of links ..... 0
Number of pollutants ..... 0
Number of land uses ..... 0

**********
Raingage Summary
**********

| Name | Data Source | Data Type | Recording Interval |
|---|---|---|---|
| Fallbrook | FallbrookHourly | INTENSITY | 60 min. |

**********
Subcatchment Summary
**********

| Name | Area | Width | %Imperv | %Slope | Rain Gage | Outlet |
|---|---|---|---|---|---|---|
| 13 | 1.45 | 143.13 | 0.00 | 8.2600 | Fallbrook | 3E |

**********
Node Summary
**********

| Name | Type | Invert Elev. | Max. Depth | Ponded Area | External Inflow |
|---|---|---|---|---|---|
| 3E | OUTFALL | 0.00 | 0.00 | 0.0 | |

**********
Analysis Options
**********
Flow Units ..... CFS
Process Models:
  Rainfall/Runoff ..... YES
  RDII ..... NO
  Snowmelt ..... NO
  Groundwater ..... NO
  Flow Routing ..... NO
  Water Quality ..... NO
Infiltration Method ..... GREEN_AMPT
Surcharge Method ..... EXTRAN
Starting Date ..... 07/25/1951 04:00:00
Ending Date ..... 05/26/2008 08:00:00
Antecedent Dry Days ..... 0.0
Report Time Step ..... 01:00:00
Wet Time Step ..... 00:30:00
Dry Time Step ..... 00:30:00

| Runoff Quantity Continuity | Volume acre-feet | Depth inches |
|---|---|---|
| Total Precipitation ..... | 105.294 | 871.400 |
| Evaporation Loss ..... | 0.675 | 5.585 |
| Infiltration Loss ..... | 95.712 | 792.101 |
| Surface Runoff ..... | 9.543 | 78.980 |
| Final Storage ..... | 0.000 | 0.000 |
| Continuity Error (%) ..... | -0.604 | |

| Flow Routing Continuity | Volume acre-feet | Volume 10^6 gal |
|---|---|---|
| Dry Weather Inflow ..... | 0.000 | 0.000 |
| Wet Weather Inflow ..... | 9.543 | 3.110 |
| Groundwater Inflow ..... | 0.000 | 0.000 |
| RDII Inflow ..... | 0.000 | 0.000 |
| External Inflow ..... | 0.000 | 0.000 |
| External Outflow ..... | 9.543 | 3.110 |
| Flooding Loss ..... | 0.000 | 0.000 |
| Evaporation Loss ..... | 0.000 | 0.000 |
| Exfiltration Loss ..... | 0.000 | 0.000 |
| Initial Stored Volume .... | 0.000 | 0.000 |
| Final Stored Volume ..... | 0.000 | 0.000 |
| Continuity Error (%) ..... | 0.000 | |

**********
Subcatchment Runoff Summary
**********

| Subcatchment | Total Precip in | Total Runon in | Total Evap in | Total Infil in | Imperv Runoff in | Perv Runoff in | Total Runoff in | Total Runoff 10^6 gal | Peak Runoff CFS | Runoff Coeff |
|---|---|---|---|---|---|---|---|---|---|---|
| 13 | 871.40 | 0.00 | 5.59 | 792.10 | 0.00 | 78.98 | 78.98 | 3.11 | 1.85 | 0.091 |

Analysis begun on:  Tue Sep 10 17:17:32 2024
Analysis ended on:  Tue Sep 10 17:17:49 2024
Total elapsed time: 00:00:17

EPA STORM WATER MANAGEMENT MODEL - VERSION 5.1 (Build 5.1.015)
---

Pre Condition 3F

**********
Element Count
**********
Number of rain gages ...... 1
Number of subcatchments ... 2
Number of nodes ........... 1
Number of links ........... 0
Number of pollutants ...... 0
Number of land uses ....... 0

***************
Raingage Summary
***************

| Name | Data Source | Data Type | Recording Interval |
|---|---|---|---|
| Fallbrook | FallbrookHourly | INTENSITY | 60 min. |

******************
Subcatchment Summary
******************

| Name | Area | Width | %Imperv | %Slope | Rain Gage | Outlet |
|---|---|---|---|---|---|---|
| 14 | 1.46 | 830.45 | 0.00 | 5.1200 | Fallbrook | 3F |
| Bypass | 6.09 | 714.00 | 0.00 | 47.3000 | Fallbrook | 3F |

***********
Node Summary
***********

| Name | Type | Invert Elev. | Max. Depth | Ponded Area | External Inflow |
|---|---|---|---|---|---|
| 3F | OUTFALL | 0.00 | 0.00 | 0.0 | |

**********
NOTE: The summary statistics displayed in this report are
based on results found at every computational time step,
not just on results from each reporting time step.
**********

***************
Analysis Options
***************
Flow Units ..... CFS
Process Models:
  Rainfall/Runoff ..... YES
  RDII ..... NO
  Snowmelt ..... NO
  Groundwater ..... NO
  Flow Routing ..... NO
  Water Quality ..... NO
Infiltration Method ..... GREEN_AMPT
Surcharge Method ..... EXTRAN
Starting Date ..... 07/25/1951 04:00:00
Ending Date ..... 05/26/2008 08:00:00
Antecedent Dry Days ..... 0.0
Report Time Step ..... 01:00:00
Wet Time Step ..... 00:30:00
Dry Time Step ..... 00:30:00

| Runoff Quantity Continuity | Volume acre-feet | Depth inches |
|---|---|---|
| Total Precipitation ..... | 548.256 | 871.400 |
| Evaporation Loss ..... | 12.921 | 20.537 |
| Infiltration Loss ..... | 404.279 | 642.562 |
| Surface Runoff ..... | 140.058 | 222.608 |
| Final Storage ..... | 0.000 | 0.000 |
| Continuity Error (%) ..... | -1.642 | |

| Flow Routing Continuity | Volume acre-feet | Volume 10^6 gal |
|---|---|---|
| Dry Weather Inflow ..... | 0.000 | 0.000 |
| Wet Weather Inflow ..... | 140.058 | 45.640 |
| Groundwater Inflow ..... | 0.000 | 0.000 |
| RDII Inflow ..... | 0.000 | 0.000 |
| External Inflow ..... | 0.000 | 0.000 |
| External Outflow ..... | 140.058 | 45.640 |
| Flooding Loss ..... | 0.000 | 0.000 |
| Evaporation Loss ..... | 0.000 | 0.000 |
| Exfiltration Loss ..... | 0.000 | 0.000 |
| Initial Stored Volume .... | 0.000 | 0.000 |

| | | |
|---|---|---|
| Final Stored Volume ..... | 0.000 | 0.000 |
| Continuity Error (%) ..... | 0.000 | |

**********
Subcatchment Runoff Summary
**********

| Subcatchment | Total Precip in | Total Runon in | Total Evap in | Total Infil in | Imperv Runoff in | Perv Runoff in | Total Runoff in | Total Runoff 10^6 gal | Peak Runoff CFS | Runoff Coeff |
|---|---|---|---|---|---|---|---|---|---|---|
| 14 | 871.40 | 0.00 | 4.24 | 800.72 | 0.00 | 76.31 | 76.31 | 3.03 | 1.85 | 0.088 |
| Bypass | 871.40 | 0.00 | 24.44 | 604.65 | 0.00 | 257.68 | 257.68 | 42.61 | 8.34 | 0.296 |

Analysis begun on:  Fri Jul 21 09:53:44 2023
Analysis ended on:  Fri Jul 21 09:54:05 2023
Total elapsed time: 00:00:21

EPA STORM WATER MANAGEMENT MODEL - VERSION 5.1 (Build 5.1.015)
---

OBR Pre Condition Basin 3G
**********
Element Count
**********
Number of rain gages ..... 1
Number of subcatchments ... 1
Number of nodes ..... 1
Number of links ..... 0
Number of pollutants ..... 0
Number of land uses ..... 0

**********
Raingage Summary
**********

| Name | Data Source | Data Type | Recording Interval |
|---|---|---|---|
| Fallbrook | FallbrookHourly | INTENSITY | 60 min. |

**********
Subcatchment Summary
**********

| Name | Area | Width | %Imperv | %Slope | Rain Gage | Outlet |
|---|---|---|---|---|---|---|
| 15 | 2.15 | 926.22 | 0.00 | 18.9000 | Fallbrook | 3GOUT |

**********
Node Summary
**********

| Name | Type | Invert Elev. | Max. Depth | Ponded Area | External Inflow |
|---|---|---|---|---|---|
| 3GOUT | OUTFALL | 0.00 | 0.00 | 0.0 | |

**********
NOTE: The summary statistics displayed in this report are
based on results found at every computational time step,
not just on results from each reporting time step.
**********

**********
Analysis Options
**********
Flow Units ..... CFS
Process Models:
  Rainfall/Runoff ..... YES
  RDII ..... NO
  Snowmelt ..... NO
  Groundwater ..... NO
  Flow Routing ..... NO
  Water Quality ..... NO
Infiltration Method ..... GREEN_AMPT
Surcharge Method ..... EXTRAN
Starting Date ..... 07/25/1951 04:00:00
Ending Date ..... 05/26/2008 08:00:00
Antecedent Dry Days ..... 0.0
Report Time Step ..... 01:00:00
Wet Time Step ..... 00:30:00
Dry Time Step ..... 00:30:00

| Runoff Quantity Continuity | Volume acre-feet | Depth inches |
|---|---|---|
| Total Precipitation ..... | 156.126 | 871.400 |
| Evaporation Loss ..... | 0.762 | 4.251 |
| Infiltration Loss ..... | 143.542 | 801.162 |
| Surface Runoff ..... | 13.851 | 77.307 |
| Final Storage ..... | 0.000 | 0.000 |
| Continuity Error (%) ..... | -1.299 | |

| Flow Routing Continuity | Volume acre-feet | Volume 10^6 gal |
|---|---|---|
| Dry Weather Inflow ..... | 0.000 | 0.000 |
| Wet Weather Inflow ..... | 13.851 | 4.514 |
| Groundwater Inflow ..... | 0.000 | 0.000 |
| RDII Inflow ..... | 0.000 | 0.000 |
| External Inflow ..... | 0.000 | 0.000 |
| External Outflow ..... | 13.851 | 4.514 |
| Flooding Loss ..... | 0.000 | 0.000 |
| Evaporation Loss ..... | 0.000 | 0.000 |
| Exfiltration Loss ..... | 0.000 | 0.000 |
| Initial Stored Volume .... | 0.000 | 0.000 |
| Final Stored Volume ..... | 0.000 | 0.000 |

Continuity Error (%) .....         0.000

**************************
Subcatchment Runoff Summary
**************************

| Subcatchment | Total Precip in | Total Runon in | Total Evap in | Total Infil in | Imperv Runoff in | Perv Runoff in | Total Runoff in | Total Runoff 10^6 gal | Peak Runoff CFS | Runoff Coeff |
|---|---|---|---|---|---|---|---|---|---|---|
| 15 | 871.40 | 0.00 | 4.25 | 801.16 | 0.00 | 77.31 | 77.31 | 4.51 | 2.72 | 0.089 |

Analysis begun on:  Thu Feb 29 10:25:06 2024
Analysis ended on:  Thu Feb 29 10:25:18 2024
Total elapsed time: 00:00:12

EPA STORM WATER MANAGEMENT MODEL - VERSION 5.1 (Build 5.1.015)
---
Pre Condition POC 3H

**********
Element Count
**********
Number of rain gages ..... 1
Number of subcatchments ... 3
Number of nodes ..... 1
Number of links ..... 0
Number of pollutants ..... 0
Number of land uses ..... 0

***************
Raingage Summary
***************

| Name | Data Source | Data Type | Recording Interval |
|---|---|---|---|
| Fallbrook | FallbrookHourly | INTENSITY | 60 min. |

******************
Subcatchment Summary
******************

| Name | Area | Width | %Imperv | %Slope | Rain Gage | Outlet |
|---|---|---|---|---|---|---|
| 16 | 1.60 | 164.53 | 8.00 | 15.1000 | Fallbrook | POC |
| 17 | 3.42 | 235.00 | 0.00 | 15.0000 | Fallbrook | POC |
| 18 | 17.20 | 600.00 | 0.00 | 10.0000 | Fallbrook | POC |

************
Node Summary
************

| Name | Type | Invert Elev. | Max. Depth | Ponded Area | External Inflow |
|---|---|---|---|---|---|
| POC | OUTFALL | 0.00 | 0.00 | 0.0 | |

**********
NOTE: The summary statistics displayed in this report are
based on results found at every computational time step,
not just on results from each reporting time step.
**********

***************
Analysis Options
***************
Flow Units ..... CFS
Process Models:
  Rainfall/Runoff ..... YES
  RDII ..... NO
  Snowmelt ..... NO
  Groundwater ..... NO
  Flow Routing ..... NO
  Water Quality ..... NO
Infiltration Method ..... GREEN_AMPT
Surcharge Method ..... EXTRAN
Starting Date ..... 07/25/1951 04:00:00
Ending Date ..... 05/26/2008 08:00:00
Antecedent Dry Days ..... 0.0
Report Time Step ..... 01:00:00
Wet Time Step ..... 00:30:00
Dry Time Step ..... 00:30:00

| Runoff Quantity Continuity | Volume acre-feet | Depth inches |
|---|---|---|
| Total Precipitation ..... | 1613.542 | 871.400 |
| Evaporation Loss ..... | 13.766 | 7.434 |
| Infiltration Loss ..... | 1421.824 | 767.862 |
| Surface Runoff ..... | 186.293 | 100.608 |
| Final Storage ..... | 0.000 | 0.000 |
| Continuity Error (%) ..... | -0.517 | |

| Flow Routing Continuity | Volume acre-feet | Volume 10^6 gal |
|---|---|---|
| Dry Weather Inflow ..... | 0.000 | 0.000 |
| Wet Weather Inflow ..... | 186.293 | 60.706 |
| Groundwater Inflow ..... | 0.000 | 0.000 |
| RDII Inflow ..... | 0.000 | 0.000 |
| External Inflow ..... | 0.000 | 0.000 |
| External Outflow ..... | 186.293 | 60.706 |
| Flooding Loss ..... | 0.000 | 0.000 |
| Evaporation Loss ..... | 0.000 | 0.000 |
| Exfiltration Loss ..... | 0.000 | 0.000 |

| | | |
|---|---|---|
| Initial Stored Volume .... | 0.000 | 0.000 |
| Final Stored Volume ..... | 0.000 | 0.000 |
| Continuity Error (%) ..... | 0.000 | |

**********
Subcatchment Runoff Summary
**********

| Subcatchment | Total Precip in | Total Runon in | Total Evap in | Total Infil in | Imperv Runoff in | Perv Runoff in | Total Runoff in | Total Runoff 10^6 gal | Peak Runoff CFS | Runoff Coeff |
|---|---|---|---|---|---|---|---|---|---|---|
| 16 | 871.40 | 0.00 | 14.35 | 707.60 | 63.74 | 94.57 | 158.31 | 6.88 | 2.10 | 0.182 |
| 17 | 871.40 | 0.00 | 6.95 | 773.35 | 0.00 | 96.75 | 96.75 | 8.98 | 4.43 | 0.111 |
| 18 | 871.40 | 0.00 | 6.89 | 772.38 | 0.00 | 96.01 | 96.01 | 44.84 | 21.22 | 0.110 |

Analysis begun on: Wed Aug 7 11:19:24 2024
Analysis ended on: Wed Aug 7 11:19:59 2024
Total elapsed time: 00:00:35

EPA STORM WATER MANAGEMENT MODEL - VERSION 5.1 (Build 5.1.015)
---
Pre Condition 3J

**********
Element Count
**********
Number of rain gages ..... 1
Number of subcatchments ... 2
Number of nodes ..... 1
Number of links ..... 0
Number of pollutants ..... 0
Number of land uses ..... 0

**********
Raingage Summary
**********

| Name | Data Source | Data Type | Recording Interval |
|---|---|---|---|
| Fallbrook | FallbrookHourly | INTENSITY | 60 min. |

**********
Subcatchment Summary
**********

| Name | Area | Width | %Imperv | %Slope | Rain Gage | Outlet |
|---|---|---|---|---|---|---|
| DMA19 | 2.37 | 463.00 | 0.00 | 7.6900 | Fallbrook | 3J |
| DMA22 | 2.52 | 430.00 | 0.00 | 7.6900 | Fallbrook | 3J |

**********
Node Summary
**********

| Name | Type | Invert Elev. | Max. Depth | Ponded Area | External Inflow |
|---|---|---|---|---|---|
| 3J | OUTFALL | 0.00 | 0.00 | 0.0 | |

**********
NOTE: The summary statistics displayed in this report are
based on results found at every computational time step,
not just on results from each reporting time step.
**********

**********
Analysis Options
**********
Flow Units ..... CFS
Process Models:
  Rainfall/Runoff ..... YES
  RDII ..... NO
  Snowmelt ..... NO
  Groundwater ..... NO
  Flow Routing ..... NO
  Water Quality ..... NO
Infiltration Method ..... GREEN_AMPT
Surcharge Method ..... EXTRAN
Starting Date ..... 07/25/1951 04:00:00
Ending Date ..... 05/26/2008 08:00:00
Antecedent Dry Days ..... 0.0
Report Time Step ..... 01:00:00
Wet Time Step ..... 00:30:00
Dry Time Step ..... 00:30:00

| Runoff Quantity Continuity | Volume acre-feet | Depth inches |
|---|---|---|
| Total Precipitation ..... | 355.096 | 871.400 |
| Evaporation Loss ..... | 22.055 | 54.122 |
| Infiltration Loss ..... | 167.122 | 410.115 |
| Surface Runoff ..... | 172.198 | 422.571 |
| Final Storage ..... | 0.000 | 0.000 |
| Continuity Error (%) ..... | -1.768 | |

| Flow Routing Continuity | Volume acre-feet | Volume 10^6 gal |
|---|---|---|
| Dry Weather Inflow ..... | 0.000 | 0.000 |
| Wet Weather Inflow ..... | 172.198 | 56.113 |
| Groundwater Inflow ..... | 0.000 | 0.000 |
| RDII Inflow ..... | 0.000 | 0.000 |
| External Inflow ..... | 0.000 | 0.000 |
| External Outflow ..... | 172.198 | 56.113 |
| Flooding Loss ..... | 0.000 | 0.000 |
| Evaporation Loss ..... | 0.000 | 0.000 |
| Exfiltration Loss ..... | 0.000 | 0.000 |
| Initial Stored Volume .... | 0.000 | 0.000 |

| | | |
|---|---|---|
| Final Stored Volume ..... | 0.000 | 0.000 |
| Continuity Error (%) ..... | 0.000 | |

**********
Subcatchment Runoff Summary
**********

| Subcatchment | Total Precip in | Total Runon in | Total Evap in | Total Infil in | Imperv Runoff in | Perv Runoff in | Total Runoff in | Total Runoff 10^6 gal | Peak Runoff CFS | Runoff Coeff |
|---|---|---|---|---|---|---|---|---|---|---|
| DMA19 | 871.40 | 0.00 | 54.20 | 407.99 | 0.00 | 425.14 | 425.14 | 27.36 | 3.31 | 0.488 |
| DMA22 | 871.40 | 0.00 | 54.05 | 412.11 | 0.00 | 420.15 | 420.15 | 28.75 | 3.51 | 0.482 |

Analysis begun on:  Mon Jul 17 08:48:04 2023
Analysis ended on:  Mon Jul 17 08:48:16 2023
Total elapsed time: 00:00:12

EPA STORM WATER MANAGEMENT MODEL - VERSION 5.1 (Build 5.1.015)
---
Pre Project EQ Road

**********
Element Count
**********
Number of rain gages ..... 1
Number of subcatchments ... 1
Number of nodes ..... 1
Number of links ..... 0
Number of pollutants ..... 0
Number of land uses ..... 0

**********
Raingage Summary
**********

| Name | Data Source | Data Type | Recording Interval |
|---|---|---|---|
| Fallbrook | Fallbrook | INTENSITY | 60 min. |

**********
Subcatchment Summary
**********

| Name | Area | Width | %Imperv | %Slope | Rain Gage | Outlet |
|---|---|---|---|---|---|---|
| TributaryToEQRoad | 375.94 | 5178.00 | 0.00 | 25.0000 | Fallbrook | POC_EQ |

**********
Node Summary
**********

| Name | Type | Invert Elev. | Max. Depth | Ponded Area | External Inflow |
|---|---|---|---|---|---|
| POC_EQ | OUTFALL | 0.00 | 0.00 | 0.0 | |

**********
NOTE: The summary statistics displayed in this report are
based on results found at every computational time step,
not just on results from each reporting time step.
**********

**********
Analysis Options
**********
Flow Units ..... CFS
Process Models:
  Rainfall/Runoff ..... YES
  RDII ..... NO
  Snowmelt ..... NO
  Groundwater ..... NO
  Flow Routing ..... NO
  Water Quality ..... NO
Infiltration Method ..... GREEN_AMPT
Starting Date ..... 07/25/1951 04:00:00
Ending Date ..... 05/26/2008 08:00:00
Antecedent Dry Days ..... 0.0
Report Time Step ..... 01:00:00
Wet Time Step ..... 00:30:00
Dry Time Step ..... 00:30:00

| Runoff Quantity Continuity | Volume acre-feet | Depth inches |
|---|---|---|
| Total Precipitation ..... | 27299.510 | 871.400 |
| Evaporation Loss ..... | 307.404 | 9.812 |
| Infiltration Loss ..... | 24317.494 | 776.214 |
| Surface Runoff ..... | 2770.695 | 88.441 |
| Final Storage ..... | 0.000 | 0.000 |
| Continuity Error (%) ..... | -0.352 | |

| Flow Routing Continuity | Volume acre-feet | Volume 10^6 gal |
|---|---|---|
| Dry Weather Inflow ..... | 0.000 | 0.000 |
| Wet Weather Inflow ..... | 2770.695 | 902.872 |
| Groundwater Inflow ..... | 0.000 | 0.000 |
| RDII Inflow ..... | 0.000 | 0.000 |
| External Inflow ..... | 0.000 | 0.000 |
| External Outflow ..... | 2770.695 | 902.872 |
| Flooding Loss ..... | 0.000 | 0.000 |
| Evaporation Loss ..... | 0.000 | 0.000 |
| Exfiltration Loss ..... | 0.000 | 0.000 |
| Initial Stored Volume .... | 0.000 | 0.000 |
| Final Stored Volume ..... | 0.000 | 0.000 |
| Continuity Error (%) ..... | 0.000 | |

**************************
Subcatchment Runoff Summary
**************************

| Subcatchment | Total Precip in | Total Runon in | Total Evap in | Total Infil in | Imperv Runoff in | Perv Runoff in | Total Runoff in | Total Runoff 10^6 gal | Peak Runoff CFS | Runoff Coeff |
|---|---|---|---|---|---|---|---|---|---|---|
| TributaryToEQRoad | 871.40 | 0.00 | 9.81 | 776.21 | 0.00 | 88.44 | 88.44 | 902.81 | 438.13 | 0.101 |

Analysis begun on:  Thu Jul 20 17:24:17 2023
Analysis ended on:  Thu Jul 20 17:24:28 2023
Total elapsed time: 00:00:11

# Attachment 4

# SWMM Output – Proposed Conditions

EPA STORM WATER MANAGEMENT MODEL - VERSION 5.2 (Build 5.2.3)
---
Post 1A

**********
Element Count
**********
Number of rain gages ..... 1
Number of subcatchments ... 3
Number of nodes ..... 2
Number of links ..... 14
Number of pollutants ..... 0
Number of land uses ..... 0

***************
Raingage Summary
***************

| Name | Data Source | Data Type | Recording Interval |
|---|---|---|---|
| Fallbrook | Fallbrook | INTENSITY | 60 min. |

******************
Subcatchment Summary
******************

| Name | Area | Width | %Imperv | %Slope | Rain Gage | Outlet |
|---|---|---|---|---|---|---|
| Basin1A | 1.05 | 131.00 | 0.00 | 0.5000 | Fallbrook | S1A |
| Diversion | 9.07 | 1319.00 | 46.60 | 8.3700 | Fallbrook | Basin1A |
| DMA1 | 39.70 | 1402.00 | 46.60 | 8.3700 | Fallbrook | Basin1A |

******************
LID Control Summary
******************

| Subcatchment | LID Control | No. of Units | Unit Area | Unit Width | % Area Covered | % Imperv Treated | % Perv Treated |
|---|---|---|---|---|---|---|---|
| Basin1A | LID1A | 1 | 45538.00 | 0.00 | 99.56 | 100.00 | 0.00 |

************
Node Summary
************

| Name | Type | Invert Elev. | Max. Depth | Ponded Area | External Inflow |
|---|---|---|---|---|---|
| 1A | OUTFALL | 0.00 | 0.00 | 0.0 | |
| S1A | STORAGE | 0.00 | 6.25 | 0.0 | |

************
Link Summary
************

| Name | From Node | To Node | Type | Length | %Slope | Roughness |
|---|---|---|---|---|---|---|
| OR1 | S1A | 1A | ORIFICE | | | |
| OR10 | S1A | 1A | ORIFICE | | | |
| OR11 | S1A | 1A | ORIFICE | | | |
| OR12 | S1A | 1A | ORIFICE | | | |
| OR2 | S1A | 1A | ORIFICE | | | |
| OR3 | S1A | 1A | ORIFICE | | | |
| OR4 | S1A | 1A | ORIFICE | | | |
| OR5 | S1A | 1A | ORIFICE | | | |
| OR6 | S1A | 1A | ORIFICE | | | |
| OR7 | S1A | 1A | ORIFICE | | | |
| OR8 | S1A | 1A | ORIFICE | | | |
| OR9 | S1A | 1A | ORIFICE | | | |
| W1 | S1A | 1A | WEIR | | | |
| W2 | S1A | 1A | WEIR | | | |

**********************
Cross Section Summary
**********************

| Conduit | Shape | Full Depth | Full Area | Hyd. Rad. | Max. Width | No. of Barrels | Full Flow |
|---|---|---|---|---|---|---|---|

***************
Analysis Options
***************
Flow Units ..... CFS
Process Models:
  Rainfall/Runoff ..... YES
  RDII ..... NO
  Snowmelt ..... NO
  Groundwater ..... NO
  Flow Routing ..... YES
  Ponding Allowed ..... YES
  Water Quality ..... NO

```
Infiltration Method ...... GREEN_AMPT
Flow Routing Method ...... KINWAVE
Starting Date ............ 07/25/1951 04:00:00
Ending Date .............. 05/26/2008 08:00:00
Antecedent Dry Days ...... 0.0
Report Time Step ......... 01:00:00
Wet Time Step ............ 00:30:00
Dry Time Step ............ 00:30:00
Routing Time Step ........ 30.00 sec
```

| Runoff Quantity Continuity | Volume acre-feet | Depth inches |
|---|---|---|
| Initial LID Storage ..... | 0.183 | 0.044 |
| Total Precipitation ..... | 3617.762 | 871.400 |
| Evaporation Loss ..... | 279.057 | 67.216 |
| Infiltration Loss ..... | 1652.019 | 397.917 |
| Surface Runoff ..... | 1726.322 | 415.814 |
| LID Drainage ..... | 22.118 | 5.327 |
| Final Storage ..... | 0.188 | 0.045 |
| Continuity Error (%) ..... | -1.707 | |

| Flow Routing Continuity | Volume acre-feet | Volume 10^6 gal |
|---|---|---|
| Dry Weather Inflow ..... | 0.000 | 0.000 |
| Wet Weather Inflow ..... | 1748.440 | 569.755 |
| Groundwater Inflow ..... | 0.000 | 0.000 |
| RDII Inflow ..... | 0.000 | 0.000 |
| External Inflow ..... | 0.000 | 0.000 |
| External Outflow ..... | 1748.381 | 569.736 |
| Flooding Loss ..... | 0.000 | 0.000 |
| Evaporation Loss ..... | 0.000 | 0.000 |
| Exfiltration Loss ..... | 0.000 | 0.000 |
| Initial Stored Volume .... | 0.000 | 0.000 |
| Final Stored Volume ..... | 0.003 | 0.001 |
| Continuity Error (%) ..... | 0.003 | |

```
*******************************
Highest Flow Instability Indexes
*******************************
All links are stable.
```

```
************************
Routing Time Step Summary
************************
Minimum Time Step           :    30.00 sec
Average Time Step           :    30.00 sec
Maximum Time Step           :    30.00 sec
% of Time in Steady State   :     0.00
Average Iterations per Step :     1.00
% of Steps Not Converging   :     0.00
```

```
***************************
Subcatchment Runoff Summary
***************************
```

| Subcatchment | Total Precip in | Total Runon in | Total Evap in | Total Infil in | Imperv Runoff in | Perv Runoff in | Total Runoff in | Total Runoff 10^6 gal | Peak Runoff CFS | Runoff Coeff |
|---|---|---|---|---|---|---|---|---|---|---|
| Basin1A | 871.40 | 19740.11 | 614.96 | 15.24 | 0.00 | 19729.39 | 19982.17 | 569.71 | 66.25 | 0.969 |
| Diversion | 871.40 | 0.00 | 53.07 | 401.07 | 369.61 | 65.11 | 434.72 | 107.06 | 12.30 | 0.499 |
| DMA1 | 871.40 | 0.00 | 55.96 | 407.32 | 366.93 | 55.85 | 422.78 | 455.75 | 53.28 | 0.485 |

```
***********************
LID Performance Summary
***********************
```

| Subcatchment | LID Control | Total Inflow in | Evap Loss in | Infil Loss in | Surface Outflow in | Drain Outflow in | Initial Storage in | Final Storage in | Continuity Error % |
|---|---|---|---|---|---|---|---|---|---|
| Basin1A | LID1A | 871.40 | 617.45 | 0.00 | 0.00 | 253.90 | 2.10 | 2.16 | -0.00 |

```
******************
Node Depth Summary
******************
```

| Node | Type | Average Depth Feet | Maximum Depth Feet | Maximum HGL Feet | Time of Max Occurrence days hr:min | Reported Max Depth Feet |
|---|---|---|---|---|---|---|
| 1A | OUTFALL | 0.00 | 0.00 | 0.00 | 0 00:00 | 0.00 |
| S1A | STORAGE | 0.01 | 4.23 | 4.23 | 9672 17:37 | 3.87 |

**********
Node Inflow Summary
**********

| Node | Type | Maximum Lateral Inflow CFS | Maximum Total Inflow CFS | Time of Max Occurrence days hr:min | Lateral Inflow Volume 10^6 gal | Total Inflow Volume 10^6 gal | Flow Balance Error Percent |
|---|---|---|---|---|---|---|---|
| 1A | OUTFALL | 0.76 | 52.45 | 9672 17:37 | 7.21 | 570 | 0.000 |
| S1A | STORAGE | 65.58 | 65.58 | 9672 17:30 | 563 | 563 | 0.003 |

**********
Node Flooding Summary
**********

No nodes were flooded.

**********
Storage Volume Summary
**********

| Storage Unit | Average Volume 1000 ft³ | Avg Pcnt Full | Evap Pcnt Loss | Exfil Pcnt Loss | Maximum Volume 1000 ft³ | Max Pcnt Full | Time of Max Occurrence days hr:min | Maximum Outflow CFS |
|---|---|---|---|---|---|---|---|---|
| S1A | 0.582 | 0.1 | 0.0 | 0.0 | 253.064 | 62.4 | 9672 17:37 | 51.76 |

**********
Outfall Loading Summary
**********

| Outfall Node | Flow Freq Pcnt | Avg Flow CFS | Max Flow CFS | Total Volume 10^6 gal |
|---|---|---|---|---|
| 1A | 16.65 | 0.25 | 52.45 | 569.694 |
| System | 16.65 | 0.25 | 52.45 | 569.694 |

**********
Link Flow Summary
**********

| Link | Type | Maximum \|Flow\| CFS | Time of Max Occurrence days hr:min | Maximum \|Veloc\| ft/sec | Max/ Full Flow | Max/ Full Depth |
|---|---|---|---|---|---|---|
| OR1 | ORIFICE | 4.39 | 9672 17:37 | | | 0.00 |
| OR10 | ORIFICE | 4.39 | 9672 17:37 | | | 0.00 |
| OR11 | ORIFICE | 4.39 | 9672 17:37 | | | 0.00 |
| OR12 | ORIFICE | 4.39 | 9672 17:37 | | | 0.00 |
| OR2 | ORIFICE | 1.89 | 9672 17:37 | | | 0.00 |
| OR3 | ORIFICE | 1.89 | 9672 17:37 | | | 0.00 |
| OR4 | ORIFICE | 1.89 | 9672 17:37 | | | 0.00 |
| OR5 | ORIFICE | 1.89 | 9672 17:37 | | | 0.00 |
| OR6 | ORIFICE | 1.89 | 9672 17:37 | | | 0.00 |
| OR7 | ORIFICE | 1.89 | 9672 17:37 | | | 0.00 |
| OR8 | ORIFICE | 5.86 | 9672 17:37 | | | 0.00 |
| OR9 | ORIFICE | 5.86 | 9672 17:37 | | | 0.00 |
| W1 | WEIR | 5.57 | 9672 17:37 | | | 0.00 |
| W2 | WEIR | 5.57 | 9672 17:37 | | | 0.00 |

**********
Conduit Surcharge Summary
**********

No conduits were surcharged.

Analysis begun on:  Tue Oct 29 14:25:42 2024
Analysis ended on:  Tue Oct 29 14:26:57 2024
Total elapsed time: 00:01:15

EPA STORM WATER MANAGEMENT MODEL - VERSION 5.1 (Build 5.1.015)
---
Post Condition 1B

**********
Element Count
**********
Number of rain gages ..... 1
Number of subcatchments ... 4
Number of nodes ..... 2
Number of links ..... 2
Number of pollutants ..... 0
Number of land uses ..... 0

**********
Raingage Summary
**********

| Name | Data Source | Data Type | Recording Interval |
|---|---|---|---|
| Fallbrook | Fallbrook | INTENSITY | 60 min. |

**********
Subcatchment Summary
**********

| Name | Area | Width | %Imperv | %Slope | Rain Gage | Outlet |
|---|---|---|---|---|---|---|
| BMP1B | 0.21 | 100.00 | 0.00 | 1.0000 | Fallbrook | S1B |
| Bypass | 0.08 | 33.00 | 76.70 | 1.5000 | Fallbrook | POC |
| DMA20 | 7.05 | 704.00 | 15.30 | 6.6500 | Fallbrook | BMP1B |
| Self_Mitigating | 0.43 | 215.00 | 0.00 | 50.0000 | Fallbrook | POC |

**********
LID Control Summary
**********

| Subcatchment | LID Control | No. of Units | Unit Area | Unit Width | % Area Covered | % Imperv Treated | % Perv Treated |
|---|---|---|---|---|---|---|---|
| BMP1B | 1B | 1 | 2615.00 | 0.00 | 28.59 | 100.00 | 0.00 |

**********
Node Summary
**********

| Name | Type | Invert Elev. | Max. Depth | Ponded Area | External Inflow |
|---|---|---|---|---|---|
| POC | OUTFALL | 0.00 | 0.00 | 0.0 | |
| S1B | STORAGE | 0.00 | 2.25 | 0.0 | |

**********
Link Summary
**********

| Name | From Node | To Node | Type | Length | %Slope | Roughness |
|---|---|---|---|---|---|---|
| OR2 | S1B | POC | ORIFICE | | | |
| W1 | S1B | POC | WEIR | | | |

**********
Cross Section Summary
**********

| Conduit | Shape | Full Depth | Full Area | Hyd. Rad. | Max. Width | No. of Barrels | Full Flow |
|---|---|---|---|---|---|---|---|

**********
NOTE: The summary statistics displayed in this report are
based on results found at every computational time step,
not just on results from each reporting time step.
**********

**********
Analysis Options
**********
Flow Units ..... CFS
Process Models:
  Rainfall/Runoff ..... YES
  RDII ..... NO
  Snowmelt ..... NO
  Groundwater ..... NO
  Flow Routing ..... YES
  Ponding Allowed ..... YES
  Water Quality ..... NO
Infiltration Method ..... GREEN_AMPT
Flow Routing Method ..... KINWAVE
Starting Date ..... 07/25/1951 04:00:00
Ending Date ..... 05/26/2008 08:00:00

```
Antecedent Dry Days ...... 0.0
Report Time Step ......... 01:00:00
Wet Time Step ............ 00:30:00
Dry Time Step ............ 00:30:00
Routing Time Step ........ 30.00 sec


**************************        Volume         Depth
Runoff Quantity Continuity     acre-feet        inches
**************************     ---------       -------
Initial LID Storage ......         0.011         0.016
Total Precipitation ......       564.232       871.400
Evaporation Loss .........        14.517        22.419
Infiltration Loss ........       475.329       734.099
Surface Runoff ...........        80.396       124.164
LID Drainage .............         1.270         1.962
Final Storage ............         0.011         0.017
Continuity Error (%) .....        -1.290


**************************        Volume        Volume
Flow Routing Continuity        acre-feet      10^6 gal
**************************     ---------     ---------
Dry Weather Inflow .......         0.000         0.000
Wet Weather Inflow .......        81.666        26.612
Groundwater Inflow .......         0.000         0.000
RDII Inflow ..............         0.000         0.000
External Inflow ..........         0.000         0.000
External Outflow .........        81.654        26.608
Flooding Loss ............         0.000         0.000
Evaporation Loss .........         0.000         0.000
Exfiltration Loss ........         0.000         0.000
Initial Stored Volume ....         0.000         0.000
Final Stored Volume ......         0.000         0.000
Continuity Error (%) .....         0.015


********************************
Highest Flow Instability Indexes
********************************
All links are stable.


*************************
Routing Time Step Summary
*************************
Minimum Time Step           :    30.00 sec
Average Time Step           :    30.00 sec
Maximum Time Step           :    30.00 sec
Percent in Steady State     :     0.00
Average Iterations per Step :     1.00
Percent Not Converging      :     0.00


***************************
Subcatchment Runoff Summary
***************************
```

| Subcatchment | Total Precip in | Total Runon in | Total Evap in | Total Infil in | Imperv Runoff in | Perv Runoff in | Total Runoff in | Total Runoff 10^6 gal | Peak Runoff CFS | Runoff Coeff |
|---|---|---|---|---|---|---|---|---|---|---|
| BMP1B | 871.40 | 5219.35 | 198.43 | 1721.41 | 0.00 | 4248.03 | 4320.60 | 24.64 | 8.68 | 0.709 |
| Bypass | 871.40 | 0.00 | 80.98 | 192.49 | 607.92 | 12.09 | 620.01 | 1.35 | 0.11 | 0.712 |
| DMA20 | 871.40 | 0.00 | 17.74 | 705.28 | 121.57 | 33.90 | 155.47 | 29.76 | 8.67 | 0.178 |
| Self_Mitigating | 871.40 | 0.00 | 2.24 | 825.14 | 0.00 | 53.65 | 53.65 | 0.63 | 0.52 | 0.062 |

```
***********************
LID Performance Summary
***********************
```

| Subcatchment | LID Control | Total Inflow in | Evap Loss in | Infil Loss in | Surface Outflow in | Drain Outflow in | Initial Storage in | Final Storage in | Continuity Error % |
|---|---|---|---|---|---|---|---|---|---|
| BMP1B | 1B | 871.40 | 617.45 | 0.00 | 0.00 | 253.90 | 2.10 | 2.16 | -0.00 |

```
******************
Node Depth Summary
******************
```

| Node | Type | Average Depth Feet | Maximum Depth Feet | Maximum HGL Feet | Time of Max Occurrence days hr:min | Reported Max Depth Feet |
|---|---|---|---|---|---|---|
| POC | OUTFALL | 0.00 | 0.00 | 0.00 | 0 00:00 | 0.00 |
| S1B | STORAGE | 0.01 | 1.07 | 1.07 | 9672 17:30 | 1.06 |

```
*******************
Node Inflow Summary
```

**********

| Node | Type | Maximum Lateral Inflow CFS | Maximum Total Inflow CFS | Time of Max Occurrence days hr:min | Lateral Inflow Volume 10^6 gal | Total Inflow Volume 10^6 gal | Flow Balance Error Percent |
|---|---|---|---|---|---|---|---|
| POC | OUTFALL | 0.66 | 8.95 | 9672 17:04 | 2.39 | 26.6 | 0.000 |
| S1B | STORAGE | 8.64 | 8.64 | 9672 17:30 | 24.2 | 24.2 | 0.017 |

**********
Node Flooding Summary
**********

No nodes were flooded.

**********
Storage Volume Summary
**********

| Storage Unit | Average Volume 1000 ft3 | Avg Pcnt Full | Evap Pcnt Loss | Exfil Pcnt Loss | Maximum Volume 1000 ft3 | Max Pcnt Full | Time of Max Occurrence days hr:min | Maximum Outflow CFS |
|---|---|---|---|---|---|---|---|---|
| S1B | 0.031 | 0 | 0 | 0 | 4.036 | 41 | 9672 17:30 | 8.63 |

**********
Outfall Loading Summary
**********

| Outfall Node | Flow Freq Pcnt | Avg Flow CFS | Max Flow CFS | Total Volume 10^6 gal |
|---|---|---|---|---|
| POC | 6.11 | 0.03 | 8.95 | 26.606 |
| System | 6.11 | 0.03 | 8.95 | 26.606 |

**********
Link Flow Summary
**********

| Link | Type | Maximum \|Flow\| CFS | Time of Max Occurrence days hr:min | Maximum \|Veloc\| ft/sec | Max/ Full Flow | Max/ Full Depth |
|---|---|---|---|---|---|---|
| OR2 | ORIFICE | 0.10 | 9672 17:30 | | | 0.00 |
| W1 | WEIR | 8.52 | 9672 17:30 | | | 0.00 |

**********
Conduit Surcharge Summary
**********

No conduits were surcharged.

Analysis begun on:  Thu May 23 09:53:09 2024
Analysis ended on:  Thu May 23 09:53:42 2024
Total elapsed time: 00:00:33

EPA STORM WATER MANAGEMENT MODEL - VERSION 5.2 (Build 5.2.3)
---
Post Condition 2H

**********
Element Count
**********
Number of rain gages ..... 1
Number of subcatchments ... 6
Number of nodes ..... 2
Number of links ..... 6
Number of pollutants ..... 0
Number of land uses ..... 0

**********
Raingage Summary
**********

| Name | Data Source | Data Type | Recording Interval |
|---|---|---|---|
| Fallbrook | Fallbrook | INTENSITY | 60 min. |

**********
Subcatchment Summary
**********

| Name | Area | Width | %Imperv | %Slope | Rain Gage | Outlet |
|---|---|---|---|---|---|---|
| 1000 | 11.03 | 675.00 | 2.00 | 22.0000 | Fallbrook | 2H |
| 2000 | 6.25 | 320.00 | 0.00 | 19.0000 | Fallbrook | 2H |
| 3000 | 3.56 | 215.00 | 0.00 | 17.0000 | Fallbrook | BMP-2H |
| BMP-2H | 0.21 | 27.00 | 0.00 | 4.1000 | Fallbrook | S2H |
| Bypass_Road | 0.47 | 55.00 | 65.00 | 0.5000 | Fallbrook | 2H |
| DMA18 | 4.51 | 38.00 | 59.00 | 6.6500 | Fallbrook | BMP-2H |

**********
LID Control Summary
**********

| Subcatchment | LID Control | No. of Units | Unit Area | Unit Width | % Area Covered | % Imperv Treated | % Perv Treated |
|---|---|---|---|---|---|---|---|
| BMP-2H | 2H | 1 | 9147.60 | 0.00 | 100.00 | 0.00 | 0.00 |

**********
Node Summary
**********

| Name | Type | Invert Elev. | Max. Depth | Ponded Area | External Inflow |
|---|---|---|---|---|---|
| 2H | OUTFALL | 0.00 | 0.00 | 0.0 | |
| S2H | STORAGE | 0.00 | 3.25 | 0.0 | |

**********
Link Summary
**********

| Name | From Node | To Node | Type | Length | %Slope | Roughness |
|---|---|---|---|---|---|---|
| OR1 | S2H | 2H | ORIFICE | | | |
| OR2 | S2H | 2H | ORIFICE | | | |
| OR3 | S2H | 2H | ORIFICE | | | |
| OR4 | S2H | 2H | ORIFICE | | | |
| OR5 | S2H | 2H | ORIFICE | | | |
| W1 | S2H | 2H | WEIR | | | |

**********
Cross Section Summary
**********

| Conduit | Shape | Full Depth | Full Area | Hyd. Rad. | Max. Width | No. of Barrels | Full Flow |
|---|---|---|---|---|---|---|---|

**********
Analysis Options
**********
Flow Units ..... CFS
Process Models:
  Rainfall/Runoff ..... YES
  RDII ..... NO
  Snowmelt ..... NO
  Groundwater ..... NO
  Flow Routing ..... YES
  Ponding Allowed ..... YES
  Water Quality ..... NO
Infiltration Method ..... GREEN_AMPT
Flow Routing Method ..... KINWAVE
Starting Date ..... 07/25/1951 04:00:00
Ending Date ..... 05/26/2008 08:00:00
Antecedent Dry Days ..... 0.0
Report Time Step ..... 01:00:00
Wet Time Step ..... 00:30:00
Dry Time Step ..... 00:30:00
Routing Time Step ..... 15.00 sec

| Runoff Quantity Continuity | Volume acre-feet | Depth inches |
|---|---|---|
| Initial LID Storage ..... | 0.037 | 0.017 |
| Total Precipitation ..... | 1890.212 | 871.400 |
| Evaporation Loss ..... | 83.101 | 38.310 |
| Infiltration Loss ..... | 1311.772 | 604.735 |
| Surface Runoff ..... | 325.859 | 150.223 |
| LID Drainage ..... | 187.006 | 86.211 |
| Final Storage ..... | 0.088 | 0.040 |
| Continuity Error (%) ..... | -0.930 | |

| Flow Routing Continuity | Volume acre-feet | Volume 10^6 gal |
|---|---|---|
| Dry Weather Inflow ..... | 0.000 | 0.000 |
| Wet Weather Inflow ..... | 512.866 | 167.125 |
| Groundwater Inflow ..... | 0.000 | 0.000 |
| RDII Inflow ..... | 0.000 | 0.000 |
| External Inflow ..... | 0.000 | 0.000 |
| External Outflow ..... | 512.865 | 167.125 |
| Flooding Loss ..... | 0.000 | 0.000 |
| Evaporation Loss ..... | 0.000 | 0.000 |
| Exfiltration Loss ..... | 0.000 | 0.000 |
| Initial Stored Volume .... | 0.000 | 0.000 |
| Final Stored Volume ..... | 0.000 | 0.000 |
| Continuity Error (%) ..... | 0.000 | |

## Highest Flow Instability Indexes

All links are stable.

## Routing Time Step Summary

| | | |
|---|---|---|
| Minimum Time Step | : | 15.00 sec |
| Average Time Step | : | 15.00 sec |
| Maximum Time Step | : | 15.00 sec |
| % of Time in Steady State | : | 0.00 |
| Average Iterations per Step | : | 1.00 |
| % of Steps Not Converging | : | 0.00 |

## Subcatchment Runoff Summary

| Subcatchment | Total Precip in | Total Runon in | Total Evap in | Total Infil in | Imperv Runoff in | Perv Runoff in | Total Runoff in | Total Runoff 10^6 gal | Peak Runoff CFS | Runoff Coeff |
|---|---|---|---|---|---|---|---|---|---|---|
| 1000 | 871.40 | 0.00 | 9.48 | 754.73 | 15.97 | 97.78 | 113.75 | 34.07 | 14.21 | 0.131 |
| 2000 | 871.40 | 0.00 | 25.80 | 620.40 | 0.00 | 233.83 | 233.83 | 39.68 | 8.46 | 0.268 |
| 3000 | 871.40 | 0.00 | 25.58 | 618.72 | 0.00 | 236.21 | 236.21 | 22.83 | 4.83 | 0.271 |
| BMP-2H | 871.40 | 15390.11 | 1056.29 | 0.00 | 0.00 | 0.00 | 15202.36 | 86.69 | 10.78 | 0.935 |
| Bypass_Road | 871.40 | 0.00 | 74.54 | 290.15 | 507.98 | 14.92 | 522.90 | 6.67 | 0.63 | 0.600 |
| DMA18 | 871.40 | 0.00 | 85.03 | 266.10 | 448.77 | 81.39 | 530.16 | 64.92 | 5.95 | 0.608 |

## LID Performance Summary

| Subcatchment | LID Control | Total Inflow in | Evap Loss in | Infil Loss in | Surface Outflow in | Drain Outflow in | Initial Storage in | Final Storage in | Continuity Error % |
|---|---|---|---|---|---|---|---|---|---|
| BMP-2H | 2H | 16261.51 | 1056.33 | 0.00 | 4516.45 | 10686.47 | 2.10 | 5.01 | -0.00 |

## Node Depth Summary

| Node | Type | Average Depth Feet | Maximum Depth Feet | Maximum HGL Feet | Time of Max Occurrence days hr:min | Reported Max Depth Feet |
|---|---|---|---|---|---|---|
| 2H | OUTFALL | 0.00 | 0.00 | 0.00 | 0 00:00 | 0.00 |
| S2H | STORAGE | 0.00 | 1.15 | 1.15 | 9672 17:31 | 1.05 |

## Node Inflow Summary

| Node | Type | Maximum Lateral Inflow CFS | Maximum Total Inflow CFS | Time of Max Occurrence days hr:min | Lateral Inflow Volume 10^6 gal | Total Inflow Volume 10^6 gal | Flow Balance Error Percent |
|---|---|---|---|---|---|---|---|
| 2H | OUTFALL | 23.49 | 32.37 | 9672 17:00 | 141 | 167 | 0.000 |
| S2H | STORAGE | 10.59 | 10.59 | 9672 17:30 | 25.8 | 25.8 | 0.000 |

## Node Flooding Summary

No nodes were flooded.

## Storage Volume Summary

| Storage Unit | Average Volume 1000 ft³ | Avg Pcnt Full | Evap Pcnt Loss | Exfil Pcnt Loss | Maximum Volume 1000 ft³ | Max Pcnt Full | Time of Max Occurrence days hr:min | Maximum Outflow CFS |
|---|---|---|---|---|---|---|---|---|
| S2H | 0.050 | 0.1 | 0.0 | 0.0 | 12.475 | 31.2 | 9672 17:31 | 10.30 |

## Outfall Loading Summary

| Flow | Avg | Max | Total |
|---|---|---|---|

| Outfall Node | Freq Pcnt | Flow CFS | Flow CFS | Volume 10^6 gal |
|---|---|---|---|---|
| 2H | 7.18 | 0.17 | 32.37 | 167.112 |
| System | 7.18 | 0.17 | 32.37 | 167.112 |

**********
Link Flow Summary
**********

| Link | Type | Maximum \|Flow\| CFS | Time of Max Occurrence days | hr:min | Maximum \|Veloc\| ft/sec | Max/ Full Flow | Max/ Full Depth |
|---|---|---|---|---|---|---|---|
| OR1 | ORIFICE | 2.55 | 9672 | 17:31 | | | 0.00 |
| OR2 | ORIFICE | 0.11 | 9672 | 17:31 | | | 0.00 |
| OR3 | ORIFICE | 2.55 | 9672 | 17:31 | | | 0.00 |
| OR4 | ORIFICE | 2.55 | 9672 | 17:31 | | | 0.00 |
| OR5 | ORIFICE | 2.55 | 9672 | 17:31 | | | 0.00 |
| W1 | WEIR | 0.00 | 0 | 00:00 | | | 0.00 |

**********
Conduit Surcharge Summary
**********

No conduits were surcharged.

Analysis begun on: Wed Jun 5 16:53:46 2024
Analysis ended on: Wed Jun 5 16:54:50 2024
Total elapsed time: 00:01:04

EPA STORM WATER MANAGEMENT MODEL - VERSION 5.1 (Build 5.1.015)
---
Post Condition 3A

**********
Element Count
**********
Number of rain gages ...... 1
Number of subcatchments ... 1
Number of nodes ........... 3
Number of links ........... 6
Number of pollutants ...... 0
Number of land uses ....... 0

***************
Raingage Summary
***************

| Name | Data Source | Data Type | Recording Interval |
|---|---|---|---|
| Fallbrook | Fallbrook | INTENSITY | 60 min. |

******************
Subcatchment Summary
******************

| Name | Area | Width | %Imperv | %Slope | Rain Gage | Outlet |
|---|---|---|---|---|---|---|
| DMA9 | 3.04 | 1005.68 | 45.00 | 2.0000 | Fallbrook | S3A |

******************
LID Control Summary
******************

| Subcatchment | LID Control | No. of Units | Unit Area | Unit Width | % Area Covered | % Imperv Treated | % Perv Treated |
|---|---|---|---|---|---|---|---|
| DMA9 | Basin3A | 1 | 2422.00 | 0.00 | 1.83 | 0.00 | 0.00 |

************
Node Summary
************

| Name | Type | Invert Elev. | Max. Depth | Ponded Area | External Inflow |
|---|---|---|---|---|---|
| R5A | JUNCTION | 1.00 | 10.00 | 0.0 | |
| 3A | OUTFALL | 0.00 | 4.00 | 0.0 | |
| S3A | STORAGE | 2.00 | 5.25 | 0.0 | |

************
Link Summary
************

| Name | From Node | To Node | Type | Length | %Slope | Roughness |
|---|---|---|---|---|---|---|
| C6 | R5A | 3A | CONDUIT | 10.0 | 10.0504 | 0.1000 |
| OR14 | S3A | R5A | ORIFICE | | | |
| OR2 | S3A | R5A | ORIFICE | | | |
| OR3 | S3A | R5A | ORIFICE | | | |
| OR4 | S3A | R5A | ORIFICE | | | |
| OR1 | S3A | R5A | WEIR | | | |

**********
Cross Section Summary
**********

| Conduit | Shape | Full Depth | Full Area | Hyd. Rad. | Max. Width | No. of Barrels | Full Flow |
|---|---|---|---|---|---|---|---|
| C6 | CIRCULAR | 4.00 | 12.57 | 1.00 | 4.00 | 1 | 59.20 |

**********
NOTE: The summary statistics displayed in this report are
based on results found at every computational time step,
not just on results from each reporting time step.
**********

***************
Analysis Options
***************
Flow Units ..... CFS
Process Models:
  Rainfall/Runoff ..... YES
  RDII ..... NO
  Snowmelt ..... NO
  Groundwater ..... NO
  Flow Routing ..... YES
  Ponding Allowed ..... YES
  Water Quality ..... NO
Infiltration Method ..... GREEN_AMPT

```
Flow Routing Method ...... KINWAVE
Starting Date ............ 07/25/1951 04:00:00
Ending Date .............. 05/26/2008 08:00:00
Antecedent Dry Days ...... 0.0
Report Time Step ......... 01:00:00
Wet Time Step ............ 01:00:00
Dry Time Step ............ 01:00:00
Routing Time Step ........ 60.00 sec


**************************        Volume         Depth
Runoff Quantity Continuity     acre-feet        inches
**************************     ---------       -------
Initial LID Storage ......         0.010         0.038
Total Precipitation ......       220.755       871.400
Evaporation Loss .........        15.290        60.355
Infiltration Loss ........       103.106       406.999
Surface Runoff ...........       111.312       439.388
LID Drainage .............         1.176         4.642
Final Storage ............         0.010         0.040
Continuity Error (%) .....        -4.588


**************************        Volume        Volume
Flow Routing Continuity        acre-feet      10^6 gal
**************************     ---------     ---------
Dry Weather Inflow .......         0.000         0.000
Wet Weather Inflow .......       112.488        36.656
Groundwater Inflow .......         0.000         0.000
RDII Inflow ..............         0.000         0.000
External Inflow ..........         0.000         0.000
External Outflow .........       112.339        36.607
Flooding Loss ............         0.000         0.000
Evaporation Loss .........         0.000         0.000
Exfiltration Loss ........         0.000         0.000
Initial Stored Volume ....         0.000         0.000
Final Stored Volume ......         0.000         0.000
Continuity Error (%) .....         0.131


********************************
Highest Flow Instability Indexes
********************************
All links are stable.


*************************
Routing Time Step Summary
*************************
Minimum Time Step           :    60.00 sec
Average Time Step           :    60.00 sec
Maximum Time Step           :    60.00 sec
Percent in Steady State     :     0.00
Average Iterations per Step :     1.00
Percent Not Converging      :     0.00


***************************
Subcatchment Runoff Summary
***************************
```

| Subcatchment | Total Precip in | Total Runon in | Total Evap in | Total Infil in | Imperv Runoff in | Perv Runoff in | Total Runoff in | Total Runoff 10^6 gal | Peak Runoff CFS | Runoff Coeff |
|---|---|---|---|---|---|---|---|---|---|---|
| DMA9 | 871.40 | 0.00 | 60.35 | 407.00 | 365.08 | 74.31 | 444.03 | 36.65 | 4.07 | 0.510 |

```
***********************
LID Performance Summary
***********************
```

| Subcatchment | LID Control | Total Inflow in | Evap Loss in | Infil Loss in | Surface Outflow in | Drain Outflow in | Initial Storage in | Final Storage in | Continuity Error % |
|---|---|---|---|---|---|---|---|---|---|
| DMA9 | Basin3A | 871.40 | 617.53 | 0.00 | 0.00 | 253.81 | 2.10 | 2.16 | -0.00 |

```
******************
Node Depth Summary
******************
```

| Node | Type | Average Depth Feet | Maximum Depth Feet | Maximum HGL Feet | Time of Max Occurrence days hr:min | Reported Max Depth Feet |
|---|---|---|---|---|---|---|
| R5A | JUNCTION | 0.01 | 0.60 | 1.60 | 9672 17:18 | 0.58 |
| 3A | OUTFALL | 0.01 | 0.60 | 0.60 | 9672 17:18 | 0.58 |
| S3A | STORAGE | 0.03 | 3.45 | 5.45 | 9672 17:18 | 3.33 |

```
*******************
```

Node Inflow Summary
******************

| Node | Type | Maximum Lateral Inflow CFS | Maximum Total Inflow CFS | Time of Max Occurrence days hr:min | Lateral Inflow Volume 10^6 gal | Total Inflow Volume 10^6 gal | Flow Balance Error Percent |
|---|---|---|---|---|---|---|---|
| R5A | JUNCTION | 0.00 | 2.92 | 9672 17:18 | 0 | 36.3 | 0.000 |
| 3A | OUTFALL | 0.08 | 2.96 | 9672 17:19 | 0.383 | 36.6 | 0.000 |
| S3A | STORAGE | 4.04 | 4.04 | 9672 17:01 | 36.3 | 36.3 | 0.014 |

**********
Node Flooding Summary
**********

No nodes were flooded.

**********
Storage Volume Summary
**********

| Storage Unit | Average Volume 1000 ft3 | Avg Pcnt Full | Evap Pcnt Loss | Exfil Pcnt Loss | Maximum Volume 1000 ft3 | Max Pcnt Full | Time of Max Occurrence days hr:min | Maximum Outflow CFS |
|---|---|---|---|---|---|---|---|---|
| S3A | 0.092 | 0 | 0 | 0 | 14.965 | 56 | 9672 17:18 | 2.92 |

**********
Outfall Loading Summary
**********

| Outfall Node | Flow Freq Pcnt | Avg Flow CFS | Max Flow CFS | Total Volume 10^6 gal |
|---|---|---|---|---|
| 3A | 8.83 | 0.03 | 2.96 | 36.605 |
| System | 8.83 | 0.03 | 2.96 | 36.605 |

**********
Link Flow Summary
**********

| Link | Type | Maximum \|Flow\| CFS | Time of Max Occurrence days hr:min | Maximum \|Veloc\| ft/sec | Max/ Full Flow | Max/ Full Depth |
|---|---|---|---|---|---|---|
| C6 | CONDUIT | 2.92 | 9672 17:18 | 2.45 | 0.05 | 0.15 |
| OR14 | ORIFICE | 0.16 | 9672 17:18 | | | 0.00 |
| OR2 | ORIFICE | 0.92 | 9672 17:18 | | | 0.00 |
| OR3 | ORIFICE | 0.92 | 9672 17:18 | | | 0.00 |
| OR4 | ORIFICE | 0.92 | 9672 17:18 | | | 0.00 |
| OR1 | WEIR | 0.00 | 0 00:00 | | | 0.00 |

**********
Conduit Surcharge Summary
**********

No conduits were surcharged.

Analysis begun on:  Thu Jun  6 16:24:52 2024
Analysis ended on:  Thu Jun  6 16:25:24 2024
Total elapsed time: 00:00:32

EPA STORM WATER MANAGEMENT MODEL - VERSION 5.1 (Build 5.1.015)
---
Post Condition 3B

**********
Element Count
**********
Number of rain gages ..... 1
Number of subcatchments ... 1
Number of nodes ..... 2
Number of links ..... 3
Number of pollutants ..... 0
Number of land uses ..... 0

**********
Raingage Summary
**********

| Name | Data Source | Data Type | Recording Interval |
|---|---|---|---|
| Fallbrook | Fallbrook | INTENSITY | 60 min. |

**********
Subcatchment Summary
**********

| Name | Area | Width | %Imperv | %Slope | Rain Gage | Outlet |
|---|---|---|---|---|---|---|
| DMA10 | 1.21 | 50.94 | 59.20 | 1.8000 | Fallbrook | S3B |

**********
LID Control Summary
**********

| Subcatchment | LID Control | No. of Units | Unit Area | Unit Width | % Area Covered | % Imperv Treated | % Perv Treated |
|---|---|---|---|---|---|---|---|
| DMA10 | 3B | 1 | 3361.00 | 0.00 | 6.38 | 100.00 | 0.00 |

**********
Node Summary
**********

| Name | Type | Invert Elev. | Max. Depth | Ponded Area | External Inflow |
|---|---|---|---|---|---|
| 3B | OUTFALL | 0.00 | 0.00 | 0.0 | |
| S3B | STORAGE | 2.00 | 4.25 | 0.0 | |

**********
Link Summary
**********

| Name | From Node | To Node | Type | Length | %Slope | Roughness |
|---|---|---|---|---|---|---|
| OR1 | S3B | 3B | ORIFICE | | | |
| OR2 | S3B | 3B | ORIFICE | | | |
| W1 | S3B | 3B | WEIR | | | |

**********
Cross Section Summary
**********

| Conduit | Shape | Full Depth | Full Area | Hyd. Rad. | Max. Width | No. of Barrels | Full Flow |
|---|---|---|---|---|---|---|---|

**********
NOTE: The summary statistics displayed in this report are
based on results found at every computational time step,
not just on results from each reporting time step.
**********

**********
Analysis Options
**********
Flow Units ..... CFS
Process Models:
  Rainfall/Runoff ..... YES
  RDII ..... NO
  Snowmelt ..... NO
  Groundwater ..... NO
  Flow Routing ..... YES
  Ponding Allowed ..... YES
  Water Quality ..... NO
Infiltration Method ..... GREEN_AMPT
Flow Routing Method ..... KINWAVE
Starting Date ..... 07/25/1951 04:00:00
Ending Date ..... 05/26/2008 08:00:00
Antecedent Dry Days ..... 0.0
Report Time Step ..... 01:00:00

Wet Time Step ..... 00:30:00
Dry Time Step ..... 00:30:00
Routing Time Step ..... 15.00 sec

| Runoff Quantity Continuity | Volume acre-feet | Depth inches |
|---|---|---|
| Initial LID Storage ..... | 0.014 | 0.134 |
| Total Precipitation ..... | 87.866 | 871.400 |
| Evaporation Loss ..... | 13.384 | 132.735 |
| Infiltration Loss ..... | 29.592 | 293.474 |
| Surface Runoff ..... | 3.924 | 38.914 |
| LID Drainage ..... | 42.329 | 419.792 |
| Final Storage ..... | 0.032 | 0.319 |
| Continuity Error (%) ..... | -1.572 | |

| Flow Routing Continuity | Volume acre-feet | Volume 10^6 gal |
|---|---|---|
| Dry Weather Inflow ..... | 0.000 | 0.000 |
| Wet Weather Inflow ..... | 46.253 | 15.072 |
| Groundwater Inflow ..... | 0.000 | 0.000 |
| RDII Inflow ..... | 0.000 | 0.000 |
| External Inflow ..... | 0.000 | 0.000 |
| External Outflow ..... | 46.253 | 15.072 |
| Flooding Loss ..... | 0.000 | 0.000 |
| Evaporation Loss ..... | 0.000 | 0.000 |
| Exfiltration Loss ..... | 0.000 | 0.000 |
| Initial Stored Volume .... | 0.000 | 0.000 |
| Final Stored Volume ..... | 0.000 | 0.000 |
| Continuity Error (%) ..... | 0.000 | |

**********
Highest Flow Instability Indexes
**********
All links are stable.

**********
Routing Time Step Summary
**********
Minimum Time Step : 15.00 sec
Average Time Step : 15.00 sec
Maximum Time Step : 15.00 sec
Percent in Steady State : 0.00
Average Iterations per Step : 1.00
Percent Not Converging : 0.00

**********
Subcatchment Runoff Summary
**********

| Subcatchment | Total Precip in | Total Runon in | Total Evap in | Total Infil in | Imperv Runoff in | Perv Runoff in | Total Runoff in | Total Runoff 10^6 gal | Peak Runoff CFS | Runoff Coeff |
|---|---|---|---|---|---|---|---|---|---|---|
| DMA10 | 871.40 | 0.00 | 132.74 | 293.47 | 431.42 | 37.63 | 458.71 | 15.07 | 1.64 | 0.526 |

**********
LID Performance Summary
**********

| Subcatchment | LID Control | Total Inflow in | Evap Loss in | Infil Loss in | Surface Outflow in | Drain Outflow in | Initial Storage in | Final Storage in | Continuity Error % |
|---|---|---|---|---|---|---|---|---|---|
| DMA10 | 3B | 7637.29 | 1030.95 | 0.00 | 20.09 | 6583.47 | 2.10 | 5.00 | -0.00 |

**********
Node Depth Summary
**********

| Node | Type | Average Depth Feet | Maximum Depth Feet | Maximum HGL Feet | Time of Max Occurrence days hr:min | Reported Max Depth Feet |
|---|---|---|---|---|---|---|
| 3B | OUTFALL | 0.00 | 0.00 | 0.00 | 0 00:00 | 0.00 |
| S3B | STORAGE | 0.00 | 1.18 | 3.18 | 9672 17:24 | 1.07 |

**********
Node Inflow Summary
**********

| | Maximum Lateral | Maximum Total | Time of Max | Lateral Inflow | Total Inflow | Flow Balance |
|---|---|---|---|---|---|---|

| Node | Type | Inflow CFS | Inflow CFS | Occurrence days hr:min | Volume 10^6 gal | Volume 10^6 gal | Error Percent |
|---|---|---|---|---|---|---|---|
| 3B | OUTFALL | 0.20 | 0.60 | 9672 17:24 | 13.8 | 15.1 | 0.000 |
| S3B | STORAGE | 1.44 | 1.44 | 9672 17:00 | 1.28 | 1.28 | 0.000 |

**********
Node Flooding Summary
**********

No nodes were flooded.

**********
Storage Volume Summary
**********

| Storage Unit | Average Volume 1000 ft3 | Avg Pcnt Full | Evap Pcnt Loss | Exfil Pcnt Loss | Maximum Volume 1000 ft3 | Max Pcnt Full | Time of Max Occurrence days hr:min | Maximum Outflow CFS |
|---|---|---|---|---|---|---|---|---|
| S3B | 0.004 | 0 | 0 | 0 | 5.182 | 21 | 9672 17:24 | 0.41 |

**********
Outfall Loading Summary
**********

| Outfall Node | Flow Freq Pcnt | Avg Flow CFS | Max Flow CFS | Total Volume 10^6 gal |
|---|---|---|---|---|
| 3B | 2.72 | 0.04 | 0.60 | 15.071 |
| System | 2.72 | 0.04 | 0.60 | 15.071 |

**********
Link Flow Summary
**********

| Link | Type | Maximum \|Flow\| CFS | Time of Max Occurrence days hr:min | Maximum \|Veloc\| ft/sec | Max/ Full Flow | Max/ Full Depth |
|---|---|---|---|---|---|---|
| OR1 | ORIFICE | 0.11 | 9672 17:24 | | | 0.00 |
| OR2 | ORIFICE | 0.30 | 9672 17:24 | | | 0.00 |
| W1 | WEIR | 0.00 | 0 00:00 | | | 0.00 |

**********
Conduit Surcharge Summary
**********

No conduits were surcharged.

Analysis begun on: Wed Jul 26 07:59:11 2023
Analysis ended on: Wed Jul 26 08:00:12 2023
Total elapsed time: 00:01:01

EPA STORM WATER MANAGEMENT MODEL - VERSION 5.2 (Build 5.2.3)
---
Post Condition 3C

**********
Element Count
**********
Number of rain gages ..... 1
Number of subcatchments ... 2
Number of nodes ..... 2
Number of links ..... 7
Number of pollutants ..... 0
Number of land uses ..... 0

**********
Raingage Summary
**********

| Name | Data Source | Data Type | Recording Interval |
|---|---|---|---|
| Fallbrook | Fallbrook | INTENSITY | 60 min. |

**********
Subcatchment Summary
**********

| Name | Area | Width | %Imperv | %Slope | Rain Gage | Outlet |
|---|---|---|---|---|---|---|
| BMP-3C | 0.17 | 818.53 | 0.00 | 2.5000 | Fallbrook | S3C |
| DMA11 | 8.68 | 818.53 | 23.00 | 2.5000 | Fallbrook | BMP-3C |

**********
LID Control Summary
**********

| Subcatchment | LID Control | No. of Units | Unit Area | Unit Width | % Area Covered | % Imperv Treated | % Perv Treated |
|---|---|---|---|---|---|---|---|
| BMP-3C | 3C | 1 | 7232.00 | 0.00 | 99.41 | 0.00 | 0.00 |

**********
Node Summary
**********

| Name | Type | Invert Elev. | Max. Depth | Ponded Area | External Inflow |
|---|---|---|---|---|---|
| 3C | OUTFALL | 0.00 | 0.00 | 0.0 | |
| S3C | STORAGE | 2.00 | 4.25 | 0.0 | |

**********
Link Summary
**********

| Name | From Node | To Node | Type | Length | %Slope | Roughness |
|---|---|---|---|---|---|---|
| OR18 | S3C | 3C | ORIFICE | | | |
| OR2 | S3C | 3C | ORIFICE | | | |
| OR3 | S3C | 3C | ORIFICE | | | |
| OR4 | S3C | 3C | ORIFICE | | | |
| OR5 | S3C | 3C | ORIFICE | | | |
| OR6 | S3C | 3C | ORIFICE | | | |
| OR1 | S3C | 3C | WEIR | | | |

**********
Cross Section Summary
**********

| Conduit | Shape | Full Depth | Full Area | Hyd. Rad. | Max. Width | No. of Barrels | Full Flow |
|---|---|---|---|---|---|---|---|

**********
Analysis Options
**********
Flow Units ..... CFS
Process Models:
  Rainfall/Runoff ..... YES
  RDII ..... NO
  Snowmelt ..... NO
  Groundwater ..... NO
  Flow Routing ..... YES
  Ponding Allowed ..... YES
  Water Quality ..... NO
Infiltration Method ..... GREEN_AMPT
Flow Routing Method ..... KINWAVE
Starting Date ..... 07/25/1951 04:00:00
Ending Date ..... 05/26/2008 08:00:00
Antecedent Dry Days ..... 0.0
Report Time Step ..... 01:00:00
Wet Time Step ..... 00:30:00
Dry Time Step ..... 00:30:00

Routing Time Step ........ 15.00 sec

| Runoff Quantity Continuity | Volume acre-feet | Depth inches |
|---|---|---|
| Initial LID Storage ..... | 0.029 | 0.039 |
| Total Precipitation ..... | 642.658 | 871.400 |
| Evaporation Loss ..... | 30.160 | 40.895 |
| Infiltration Loss ..... | 430.846 | 584.198 |
| Surface Runoff ..... | 188.961 | 256.219 |
| Final Storage ..... | 0.030 | 0.041 |
| Continuity Error (%) ..... | -1.138 | |

| Flow Routing Continuity | Volume acre-feet | Volume 10^6 gal |
|---|---|---|
| Dry Weather Inflow ..... | 0.000 | 0.000 |
| Wet Weather Inflow ..... | 188.961 | 61.576 |
| Groundwater Inflow ..... | 0.000 | 0.000 |
| RDII Inflow ..... | 0.000 | 0.000 |
| External Inflow ..... | 0.000 | 0.000 |
| External Outflow ..... | 188.958 | 61.575 |
| Flooding Loss ..... | 0.000 | 0.000 |
| Evaporation Loss ..... | 0.000 | 0.000 |
| Exfiltration Loss ..... | 0.000 | 0.000 |
| Initial Stored Volume .... | 0.000 | 0.000 |
| Final Stored Volume ..... | 0.003 | 0.001 |
| Continuity Error (%) ..... | 0.000 | |

**********
Highest Flow Instability Indexes
**********
All links are stable.

**********
Routing Time Step Summary
**********

| | | |
|---|---|---|
| Minimum Time Step | : | 15.00 sec |
| Average Time Step | : | 15.00 sec |
| Maximum Time Step | : | 15.00 sec |
| % of Time in Steady State | : | 0.00 |
| Average Iterations per Step | : | 1.00 |
| % of Steps Not Converging | : | 0.00 |

**********
Subcatchment Runoff Summary
**********

| Subcatchment | Total Precip in | Total Runon in | Total Evap in | Total Infil in | Imperv Runoff in | Perv Runoff in | Total Runoff in | Total Runoff 10^6 gal | Peak Runoff CFS | Runoff Coeff |
|---|---|---|---|---|---|---|---|---|---|---|
| BMP-3C | 871.40 | 13583.31 | 549.56 | 329.22 | 0.00 | 13578.06 | 13578.06 | 61.57 | 11.38 | 0.939 |
| DMA11 | 871.40 | 0.00 | 31.11 | 589.10 | 182.28 | 78.96 | 261.25 | 61.60 | 11.38 | 0.300 |

**********
LID Performance Summary
**********

| Subcatchment | LID Control | Total Inflow in | Evap Loss in | Infil Loss in | Surface Outflow in | Drain Outflow in | Initial Storage in | Final Storage in | Continuity Error % |
|---|---|---|---|---|---|---|---|---|---|
| BMP-3C | 3C | 871.40 | 552.52 | 318.82 | 0.00 | 0.00 | 2.10 | 2.16 | -0.00 |

**********
Node Depth Summary
**********

| Node | Type | Average Depth Feet | Maximum Depth Feet | Maximum HGL Feet | Time of Max Occurrence days hr:min | Reported Max Depth Feet |
|---|---|---|---|---|---|---|
| 3C | OUTFALL | 0.00 | 0.00 | 0.00 | 0 00:00 | 0.00 |
| S3C | STORAGE | 0.03 | 3.39 | 5.39 | 9672 17:31 | 3.27 |

**********
Node Inflow Summary
**********

| Node | Type | Maximum Lateral Inflow CFS | Maximum Total Inflow CFS | Time of Max Occurrence days hr:min | Lateral Inflow Volume 10^6 gal | Total Inflow Volume 10^6 gal | Flow Balance Error Percent |
|---|---|---|---|---|---|---|---|

| | | | | | | | | | |
|---|---|---|---|---|---|---|---|---|---|
| 3C | OUTFALL | 0.00 | 11.15 | 9672 | 17:31 | 0 | 61.6 | 0.000 |
| S3C | STORAGE | 11.38 | 11.38 | 9672 | 17:30 | 61.6 | 61.6 | 0.000 |

**********
Node Flooding Summary
**********

No nodes were flooded.

**********
Storage Volume Summary
**********

| Storage Unit | Average Volume 1000 ft³ | Avg Pcnt Full | Evap Pcnt Loss | Exfil Pcnt Loss | Maximum Volume 1000 ft³ | Max Pcnt Full | Time of Max Occurrence days hr:min | Maximum Outflow CFS |
|---|---|---|---|---|---|---|---|---|
| S3C | 0.251 | 0.6 | 0.0 | 0.0 | 34.107 | 75.8 | 9672 17:31 | 11.15 |

**********
Outfall Loading Summary
**********

| Outfall Node | Flow Freq Pcnt | Avg Flow CFS | Max Flow CFS | Total Volume 10^6 gal |
|---|---|---|---|---|
| 3C | 14.31 | 0.03 | 11.15 | 61.570 |
| System | 14.31 | 0.03 | 11.15 | 61.570 |

**********
Link Flow Summary
**********

| Link | Type | Maximum \|Flow\| CFS | Time of Max Occurrence days hr:min | Maximum \|Veloc\| ft/sec | Max/ Full Flow | Max/ Full Depth |
|---|---|---|---|---|---|---|
| OR18 | ORIFICE | 0.20 | 9672 17:31 | | | 0.00 |
| OR2 | ORIFICE | 0.86 | 9672 17:31 | | | 0.00 |
| OR3 | ORIFICE | 0.86 | 9672 17:31 | | | 0.00 |
| OR4 | ORIFICE | 0.86 | 9672 17:31 | | | 0.00 |
| OR5 | ORIFICE | 0.86 | 9672 17:31 | | | 0.00 |
| OR6 | ORIFICE | 0.86 | 9672 17:31 | | | 0.00 |
| OR1 | WEIR | 6.63 | 9672 17:31 | | | 0.00 |

**********
Conduit Surcharge Summary
**********

No conduits were surcharged.

Analysis begun on: Sat Jun 1 20:02:06 2024
Analysis ended on: Sat Jun 1 20:03:07 2024
Total elapsed time: 00:01:01

EPA STORM WATER MANAGEMENT MODEL - VERSION 5.2 (Build 5.2.4)
---
Post Condition 3D

**********
Element Count
**********
Number of rain gages ...... 1
Number of subcatchments ... 3
Number of nodes ........... 2
Number of links ........... 7
Number of pollutants ...... 0
Number of land uses ....... 0

***************
Raingage Summary
***************

| Name | Data Source | Data Type | Recording Interval |
|---|---|---|---|
| Fallbrook | Fallbrook | INTENSITY | 60 min. |

*******************
Subcatchment Summary
*******************

| Name | Area | Width | %Imperv | %Slope | Rain Gage | Outlet |
|---|---|---|---|---|---|---|
| Basin3D | 0.35 | 175.00 | 0.00 | 0.5000 | Fallbrook | S3D |
| Bypass | 28.59 | 260.00 | 0.00 | 5.5000 | Fallbrook | 3D |
| DMA12 | 14.46 | 200.00 | 32.00 | 3.7000 | Fallbrook | Basin3D |

******************
LID Control Summary
******************

| Subcatchment | LID Control | No. of Units | Unit Area | Unit Width | % Area Covered | % Imperv Treated | % Perv Treated |
|---|---|---|---|---|---|---|---|
| Basin3D | LID1 | 1 | 15325.00 | 0.00 | 100.00 | 100.00 | 0.00 |

************
Node Summary
************

| Name | Type | Invert Elev. | Max. Depth | Ponded Area | External Inflow |
|---|---|---|---|---|---|
| 3D | OUTFALL | 0.00 | 0.00 | 0.0 | |
| S3D | STORAGE | 0.00 | 3.75 | 0.0 | |

************
Link Summary
************

| Name | From Node | To Node | Type | Length | %Slope | Roughness |
|---|---|---|---|---|---|---|
| OR2 | S3D | 3D | ORIFICE | | | |
| OR3 | S3D | 3D | ORIFICE | | | |
| OR4 | S3D | 3D | ORIFICE | | | |
| OR5 | S3D | 3D | ORIFICE | | | |
| OR6 | S3D | 3D | ORIFICE | | | |
| OR7 | S3D | 3D | ORIFICE | | | |
| OR1 | S3D | 3D | WEIR | | | |

**********************
Cross Section Summary
**********************

| Conduit | Shape | Full Depth | Full Area | Hyd. Rad. | Max. Width | No. of Barrels | Full Flow |
|---|---|---|---|---|---|---|---|

***************
Analysis Options
***************
Flow Units ..... CFS
Process Models:
  Rainfall/Runoff ..... YES
  RDII ..... NO

```
  Snowmelt ............... NO
  Groundwater ............ NO
  Flow Routing ........... YES
  Ponding Allowed ........ YES
  Water Quality .......... NO
Infiltration Method ...... GREEN_AMPT
Flow Routing Method ...... KINWAVE
Starting Date ............ 07/25/1951 04:00:00
Ending Date .............. 05/26/2008 08:00:00
Antecedent Dry Days ...... 0.0
Report Time Step ......... 01:00:00
Wet Time Step ............ 00:30:00
Dry Time Step ............ 00:30:00
Routing Time Step ........ 60.00 sec
```

| Runoff Quantity Continuity | Volume acre-feet | Depth inches |
|---|---|---|
| Initial LID Storage ..... | 0.062 | 0.017 |
| Total Precipitation ..... | 3151.694 | 871.400 |
| Evaporation Loss ..... | 102.044 | 28.214 |
| Infiltration Loss ..... | 2606.272 | 720.598 |
| Surface Runoff ..... | 248.204 | 68.625 |
| LID Drainage ..... | 208.544 | 57.660 |
| Final Storage ..... | 0.157 | 0.043 |
| Continuity Error (%) ..... | -0.427 | |

| Flow Routing Continuity | Volume acre-feet | Volume 10^6 gal |
|---|---|---|
| Dry Weather Inflow ..... | 0.000 | 0.000 |
| Wet Weather Inflow ..... | 456.748 | 148.838 |
| Groundwater Inflow ..... | 0.000 | 0.000 |
| RDII Inflow ..... | 0.000 | 0.000 |
| External Inflow ..... | 0.000 | 0.000 |
| External Outflow ..... | 456.705 | 148.824 |
| Flooding Loss ..... | 0.000 | 0.000 |
| Evaporation Loss ..... | 0.000 | 0.000 |
| Exfiltration Loss ..... | 0.000 | 0.000 |
| Initial Stored Volume .... | 0.000 | 0.000 |
| Final Stored Volume ..... | 0.000 | 0.000 |
| Continuity Error (%) ..... | 0.009 | |

## Highest Flow Instability Indexes

All links are stable.

## Routing Time Step Summary

| | | |
|---|---|---|
| Minimum Time Step | : | 60.00 sec |
| Average Time Step | : | 60.00 sec |
| Maximum Time Step | : | 60.00 sec |
| % of Time in Steady State | : | 0.00 |
| Average Iterations per Step | : | 1.00 |
| % of Steps Not Converging | : | 0.00 |

## Subcatchment Runoff Summary

| Subcatchment | Total Precip in | Total Runon in | Total Evap in | Total Infil in | Imperv Runoff in | Perv Runoff in | Total Runoff in | Total Runoff 10^6 gal | Peak Runoff CFS | Runoff Coeff |
|---|---|---|---|---|---|---|---|---|---|---|
| Basin3D | 871.40 | 11890.24 | 1109.97 | 0.00 | 0.00 | 0.00 | 11649.03 | 111.28 | 16.64 | 0.913 |
| Bypass | 871.40 | 0.00 | 7.83 | 816.88 | 0.00 | 48.37 | 48.37 | 37.55 | 23.72 | 0.056 |
| DMA12 | 871.40 | 0.00 | 42.19 | 547.75 | 248.08 | 41.20 | 289.28 | 113.58 | 16.64 | 0.332 |

## LID Performance Summary

| | Total | Evap | Infil | Surface | Drain | Initial | Final | Continuity |
|---|---|---|---|---|---|---|---|---|

| Subcatchment | LID Control | Inflow in | Loss in | Loss in | Outflow in | Outflow in | Storage in | Storage in | Error % |
|---|---|---|---|---|---|---|---|---|---|
| Basin3D | LID1 | 12761.64 | 1109.97 | 0.00 | 4535.52 | 7113.49 | 2.10 | 5.36 | -0.00 |

**********
Node Depth Summary
**********

| Node | Type | Average Depth Feet | Maximum Depth Feet | Maximum HGL Feet | Time of Max Occurrence days hr:min | Reported Max Depth Feet |
|---|---|---|---|---|---|---|
| 3D | OUTFALL | 0.00 | 0.00 | 0.00 | 0 00:00 | 0.00 |
| S3D | STORAGE | 0.01 | 1.49 | 1.49 | 9672 17:32 | 1.46 |

**********
Node Inflow Summary
**********

| Node | Type | Maximum Lateral Inflow CFS | Maximum Total Inflow CFS | Time of Max Occurrence days hr:min | Lateral Inflow Volume 10^6 gal | Total Inflow Volume 10^6 gal | Flow Balance Error Percent |
|---|---|---|---|---|---|---|---|
| 3D | OUTFALL | 23.77 | 37.85 | 9672 17:01 | 106 | 149 | 0.000 |
| S3D | STORAGE | 16.59 | 16.59 | 9672 17:31 | 43.3 | 43.3 | 0.032 |

**********
Node Flooding Summary
**********

No nodes were flooded.

**********
Storage Volume Summary
**********

| Storage Unit | Average Volume 1000 ft | Avg Pcnt Full | Evap Pcnt Loss | Exfil Pcnt Loss | Maximum Volume 1000 ft | Max Pcnt Full | Time of Max Occurrence days hr:min | Maximum Outflow CFS |
|---|---|---|---|---|---|---|---|---|
| S3D | 0.125 | 0.2 | 0.0 | 0.0 | 26.567 | 36.0 | 9672 17:32 | 16.40 |

**********
Outfall Loading Summary
**********

| Outfall Node | Flow Freq Pcnt | Avg Flow CFS | Max Flow CFS | Total Volume 10^6 gal |
|---|---|---|---|---|
| 3D | 20.59 | 0.05 | 37.85 | 148.813 |
| System | 20.59 | 0.05 | 37.85 | 148.813 |

**********
Link Flow Summary
**********

| Link | Type | Maximum \|Flow\| CFS | Time of Max Occurrence days hr:min | Maximum \|Veloc\| ft/sec | Max/ Full Flow | Max/ Full Depth |
|---|---|---|---|---|---|---|
| OR2 | ORIFICE | 11.45 | 9672 17:32 | | 0.00 | |
| OR3 | ORIFICE | 0.37 | 9672 17:32 | | 0.00 | |
| OR4 | ORIFICE | 1.14 | 9672 17:32 | | 0.00 | |
| OR5 | ORIFICE | 1.14 | 9672 17:32 | | 0.00 | |
| OR6 | ORIFICE | 1.14 | 9672 17:32 | | 0.00 | |
| OR7 | ORIFICE | 1.14 | 9672 17:32 | | 0.00 | |
| OR1 | WEIR | 0.00 | 0 00:00 | | 0.00 | |

**********
Conduit Surcharge Summary
**********

No conduits were surcharged.


Analysis begun on:  Tue May 28 17:11:42 2024
Analysis ended on:  Tue May 28 17:12:11 2024
Total elapsed time: 00:00:29

EPA STORM WATER MANAGEMENT MODEL - VERSION 5.2 (Build 5.2.3)
---

OBR Post Condition Basin 3E

**********
Element Count
**********
Number of rain gages ..... 1
Number of subcatchments ... 2
Number of nodes ..... 2
Number of links ..... 5
Number of pollutants ..... 0
Number of land uses ..... 0

**********
Raingage Summary
**********

| Name | Data Source | Data Type | Recording Interval |
|---|---|---|---|
| Fallbrook | Fallbrook | INTENSITY | 60 min. |

**********
Subcatchment Summary
**********

| Name | Area | Width | %Imperv | %Slope | Rain Gage | Outlet |
|---|---|---|---|---|---|---|
| BMP3E | 0.04 | 1.08 | 0.00 | 2.5500 | Fallbrook | STO |
| DMA13 | 1.41 | 89.00 | 58.00 | 2.5500 | Fallbrook | BMP3E |

**********
LID Control Summary
**********

| Subcatchment | LID Control | No. of Units | Unit Area | Unit Width | % Area Covered | % Imperv Treated | % Perv Treated |
|---|---|---|---|---|---|---|---|
| BMP3E | 3E | 1 | 1600.00 | 0.00 | 99.27 | 0.00 | 0.00 |

**********
Node Summary
**********

| Name | Type | Invert Elev. | Max. Depth | Ponded Area | External Inflow |
|---|---|---|---|---|---|
| 3E | OUTFALL | 0.00 | 0.00 | 0.0 | |
| STO | STORAGE | 0.00 | 4.25 | 0.0 | |

**********
Link Summary
**********

| Name | From Node | To Node | Type | Length | %Slope | Roughness |
|---|---|---|---|---|---|---|
| OR1 | STO | 3E | ORIFICE | | | |
| OR2 | STO | 3E | ORIFICE | | | |
| OR3 | STO | 3E | ORIFICE | | | |
| OR4 | STO | 3E | ORIFICE | | | |
| WR1 | STO | 3E | WEIR | | | |

**********
Cross Section Summary
**********

| Conduit | Shape | Full Depth | Full Area | Hyd. Rad. | Max. Width | No. of Barrels | Full Flow |
|---|---|---|---|---|---|---|---|

**********
Analysis Options
**********
Flow Units ..... CFS
Process Models:
  Rainfall/Runoff ..... YES
  RDII ..... NO
  Snowmelt ..... NO

```
  Groundwater ..... NO
  Flow Routing ..... YES
  Ponding Allowed ..... YES
  Water Quality ..... NO
Infiltration Method ..... GREEN_AMPT
Flow Routing Method ..... KINWAVE
Starting Date ..... 07/25/1951 04:00:00
Ending Date ..... 05/26/2008 08:00:00
Antecedent Dry Days ..... 0.0
Report Time Step ..... 01:00:00
Wet Time Step ..... 00:30:00
Dry Time Step ..... 00:30:00
Routing Time Step ..... 30.00 sec
```

| Runoff Quantity Continuity | Volume acre-feet | Depth inches |
|---|---|---|
| Initial LID Storage ..... | 0.007 | 0.061 |
| Total Precipitation ..... | 105.004 | 871.400 |
| Evaporation Loss ..... | 9.818 | 81.476 |
| Infiltration Loss ..... | 38.606 | 320.382 |
| Surface Runoff ..... | 57.787 | 479.560 |
| LID Drainage ..... | 0.739 | 6.129 |
| Final Storage ..... | 0.008 | 0.063 |
| Continuity Error (%) ..... | -1.853 | |

| Flow Routing Continuity | Volume acre-feet | Volume 10^6 gal |
|---|---|---|
| Dry Weather Inflow ..... | 0.000 | 0.000 |
| Wet Weather Inflow ..... | 58.526 | 19.071 |
| Groundwater Inflow ..... | 0.000 | 0.000 |
| RDII Inflow ..... | 0.000 | 0.000 |
| External Inflow ..... | 0.000 | 0.000 |
| External Outflow ..... | 58.525 | 19.071 |
| Flooding Loss ..... | 0.000 | 0.000 |
| Evaporation Loss ..... | 0.000 | 0.000 |
| Exfiltration Loss ..... | 0.000 | 0.000 |
| Initial Stored Volume .... | 0.000 | 0.000 |
| Final Stored Volume ..... | 0.001 | 0.000 |
| Continuity Error (%) ..... | 0.001 | |

```
Highest Flow Instability Indexes
All links are stable.
```

```
Routing Time Step Summary
Minimum Time Step           :    30.00 sec
Average Time Step           :    30.00 sec
Maximum Time Step           :    30.00 sec
% of Time in Steady State   :     0.00
Average Iterations per Step :     1.00
% of Steps Not Converging   :     0.00
```

```
Subcatchment Runoff Summary
```

| Subcatchment | Total Precip in | Total Runon in | Total Evap in | Total Infil in | Imperv Runoff in | Perv Runoff in | Total Runoff in | Total Runoff 10^6 gal | Peak Runoff CFS | Runoff Coeff |
|---|---|---|---|---|---|---|---|---|---|---|
| BMP3E | 871.40 | 18752.10 | 625.88 | 18.06 | 0.00 | 18741.71 | 18981.25 | 19.07 | 1.91 | 0.967 |
| DMA13 | 871.40 | 0.00 | 67.18 | 328.32 | 455.41 | 37.01 | 492.43 | 18.84 | 1.90 | 0.565 |

**********
LID Performance Summary
**********

| Subcatchment | LID Control | Total Inflow in | Evap Loss in | Infil Loss in | Surface Outflow in | Drain Outflow in | Initial Storage in | Final Storage in | Continuity Error % |
|---|---|---|---|---|---|---|---|---|---|
| BMP3E | 3E | 871.40 | 630.04 | 0.00 | 0.00 | 241.30 | 2.40 | 2.46 | -0.00 |

**********
Node Depth Summary
**********

| Node | Type | Average Depth Feet | Maximum Depth Feet | Maximum HGL Feet | Time of Max Occurrence days hr:min | Reported Max Depth Feet |
|---|---|---|---|---|---|---|
| 3E | OUTFALL | 0.00 | 0.00 | 0.00 | 0 00:00 | 0.00 |
| STO | STORAGE | 0.04 | 2.34 | 2.34 | 9672 17:37 | 2.15 |

**********
Node Inflow Summary
**********

| Node | Type | Maximum Lateral Inflow CFS | Maximum Total Inflow CFS | Time of Max Occurrence days hr:min | Lateral Inflow Volume 10^6 gal | Total Inflow Volume 10^6 gal | Flow Balance Error Percent |
|---|---|---|---|---|---|---|---|
| 3E | OUTFALL | 0.01 | 1.53 | 9672 17:37 | 0.241 | 19.1 | 0.000 |
| STO | STORAGE | 1.90 | 1.90 | 9672 17:30 | 18.8 | 18.8 | 0.001 |

**********
Node Flooding Summary
**********

No nodes were flooded.

**********
Storage Volume Summary
**********

| Storage Unit | Average Volume 1000 ft³ | Avg Pcnt Full | Evap Pcnt Loss | Exfil Pcnt Loss | Maximum Volume 1000 ft³ | Max Pcnt Full | Time of Max Occurrence days hr:min | Maximum Outflow CFS |
|---|---|---|---|---|---|---|---|---|
| STO | 0.105 | 0.6 | 0.0 | 0.0 | 7.644 | 42.2 | 9672 17:37 | 1.52 |

**********
Outfall Loading Summary
**********

| Outfall Node | Flow Freq Pcnt | Avg Flow CFS | Max Flow CFS | Total Volume 10^6 gal |
|---|---|---|---|---|
| 3E | 11.64 | 0.01 | 1.53 | 19.070 |
| System | 11.64 | 0.01 | 1.53 | 19.070 |

**********
Link Flow Summary
**********

| Link | Type | Maximum \|Flow\| CFS | Time of Max Occurrence days | hr:min | Maximum \|Veloc\| ft/sec | Max/ Full Flow | Max/ Full Depth |
|---|---|---|---|---|---|---|---|
| OR1 | ORIFICE | 0.72 | 9672 | 17:37 | | | 0.00 |
| OR2 | ORIFICE | 0.03 | 9672 | 17:37 | | | 0.00 |
| OR3 | ORIFICE | 0.05 | 9672 | 17:37 | | | 0.00 |
| OR4 | ORIFICE | 0.72 | 9672 | 17:37 | | | 0.00 |
| WR1 | WEIR | 0.00 | 0 | 00:00 | | | 0.00 |

**********
Conduit Surcharge Summary
**********

No conduits were surcharged.

Analysis begun on:  Tue Sep 10 17:21:33 2024
Analysis ended on:  Tue Sep 10 17:22:18 2024
Total elapsed time: 00:00:45

EPA STORM WATER MANAGEMENT MODEL - VERSION 5.1 (Build 5.1.015)
---
Post Condition 3F

**********
Element Count
**********
Number of rain gages ..... 1
Number of subcatchments ... 2
Number of nodes ..... 3
Number of links ..... 4
Number of pollutants ..... 0
Number of land uses ..... 0

**********
Raingage Summary
**********

| Name | Data Source | Data Type | Recording Interval |
|---|---|---|---|
| Fallbrook | Fallbrook | INTENSITY | 60 min. |

**********
Subcatchment Summary
**********

| Name | Area | Width | %Imperv | %Slope | Rain Gage | Outlet |
|---|---|---|---|---|---|---|
| DMA14 | 1.46 | 38.00 | 86.90 | 1.5000 | Fallbrook | S3F |
| S1 | 6.09 | 714.00 | 0.00 | 47.3000 | Fallbrook | 3F |

**********
LID Control Summary
**********

| Subcatchment | LID Control | No. of Units | Unit Area | Unit Width | % Area Covered | % Imperv Treated | % Perv Treated |
|---|---|---|---|---|---|---|---|
| DMA14 | LID1 | 1 | 1619.00 | 0.00 | 2.55 | 100.00 | 0.00 |

**********
Node Summary
**********

| Name | Type | Invert Elev. | Max. Depth | Ponded Area | External Inflow |
|---|---|---|---|---|---|
| J1 | JUNCTION | 1.00 | 10.00 | 0.0 | |
| 3F | OUTFALL | 0.00 | 4.00 | 0.0 | |
| S3F | STORAGE | 0.00 | 2.25 | 0.0 | |

**********
Link Summary
**********

| Name | From Node | To Node | Type | Length | %Slope | Roughness |
|---|---|---|---|---|---|---|
| C11 | J1 | 3F | CONDUIT | 10.0 | 10.0504 | 0.1200 |
| OR1 | S3F | J1 | ORIFICE | | | |
| OR2 | S3F | J1 | ORIFICE | | | |
| W1 | S3F | J1 | WEIR | | | |

**********
Cross Section Summary
**********

| Conduit | Shape | Full Depth | Full Area | Hyd. Rad. | Max. Width | No. of Barrels | Full Flow |
|---|---|---|---|---|---|---|---|
| C11 | CIRCULAR | 4.00 | 12.57 | 1.00 | 4.00 | 1 | 49.33 |

**********
NOTE: The summary statistics displayed in this report are
based on results found at every computational time step,
not just on results from each reporting time step.
**********

**********
Analysis Options
**********
Flow Units ..... CFS
Process Models:
  Rainfall/Runoff ..... YES
  RDII ..... NO
  Snowmelt ..... NO
  Groundwater ..... NO
  Flow Routing ..... YES
  Ponding Allowed ..... YES
  Water Quality ..... NO
Infiltration Method ..... GREEN_AMPT
Flow Routing Method ..... KINWAVE

```
Starting Date ............ 07/25/1951 04:00:00
Ending Date .............. 05/26/2008 08:00:00
Antecedent Dry Days ...... 0.0
Report Time Step ......... 01:00:00
Wet Time Step ............ 00:30:00
Dry Time Step ............ 00:30:00
Routing Time Step ........ 15.00 sec
```

| Runoff Quantity Continuity | Volume acre-feet | Depth inches |
|---|---|---|
| Initial LID Storage ..... | 0.007 | 0.010 |
| Total Precipitation ..... | 548.256 | 871.400 |
| Evaporation Loss ..... | 28.790 | 45.759 |
| Infiltration Loss ..... | 322.416 | 512.449 |
| Surface Runoff ..... | 161.012 | 255.914 |
| LID Drainage ..... | 45.288 | 71.981 |
| Final Storage ..... | 0.016 | 0.025 |
| Continuity Error (%) ..... | -1.689 | |

| Flow Routing Continuity | Volume acre-feet | Volume 10^6 gal |
|---|---|---|
| Dry Weather Inflow ..... | 0.000 | 0.000 |
| Wet Weather Inflow ..... | 206.301 | 67.226 |
| Groundwater Inflow ..... | 0.000 | 0.000 |
| RDII Inflow ..... | 0.000 | 0.000 |
| External Inflow ..... | 0.000 | 0.000 |
| External Outflow ..... | 206.256 | 67.212 |
| Flooding Loss ..... | 0.000 | 0.000 |
| Evaporation Loss ..... | 0.000 | 0.000 |
| Exfiltration Loss ..... | 0.000 | 0.000 |
| Initial Stored Volume .... | 0.000 | 0.000 |
| Final Stored Volume ..... | 0.000 | 0.000 |
| Continuity Error (%) ..... | 0.022 | |

```
*********************************
Highest Flow Instability Indexes
*********************************
All links are stable.
```

```
************************
Routing Time Step Summary
************************
Minimum Time Step           :    15.00 sec
Average Time Step           :    15.00 sec
Maximum Time Step           :    15.00 sec
Percent in Steady State     :     0.00
Average Iterations per Step :     1.00
Percent Not Converging      :     0.00
```

```
*****************************
Subcatchment Runoff Summary
*****************************
```

| Subcatchment | Total Precip in | Total Runon in | Total Evap in | Total Infil in | Imperv Runoff in | Perv Runoff in | Total Runoff in | Total Runoff 10^6 gal | Peak Runoff CFS | Runoff Coeff |
|---|---|---|---|---|---|---|---|---|---|---|
| DMA14 | 871.40 | 0.00 | 136.50 | 99.56 | 644.52 | 11.52 | 647.69 | 25.68 | 2.03 | 0.743 |
| S1 | 871.40 | 0.00 | 24.00 | 611.43 | 0.00 | 251.23 | 251.23 | 41.54 | 8.34 | 0.288 |

```
***********************
LID Performance Summary
***********************
```

| Subcatchment | LID Control | Total Inflow in | Evap Loss in | Infil Loss in | Surface Outflow in | Drain Outflow in | Initial Storage in | Final Storage in | Continuity Error % |
|---|---|---|---|---|---|---|---|---|---|
| DMA14 | LID1 | 26190.25 | 1197.56 | 0.00 | 10368.39 | 14622.60 | 2.10 | 5.01 | -0.00 |

```
******************
Node Depth Summary
******************
```

| Node | Type | Average Depth Feet | Maximum Depth Feet | Maximum HGL Feet | Time of Max Occurrence days hr:min | Reported Max Depth Feet |
|---|---|---|---|---|---|---|
| J1 | JUNCTION | 0.00 | 0.55 | 1.55 | 9672 17:00 | 0.55 |
| 3F | OUTFALL | 0.00 | 0.55 | 0.55 | 9672 17:00 | 0.55 |
| S3F | STORAGE | 0.01 | 1.42 | 1.42 | 9672 17:00 | 1.42 |

```
******************
```

Node Inflow Summary
******************

| Node | Type | Maximum Lateral Inflow CFS | Maximum Total Inflow CFS | Time of Max Occurrence days hr:min | Lateral Inflow Volume 10^6 gal | Total Inflow Volume 10^6 gal | Flow Balance Error Percent |
|---|---|---|---|---|---|---|---|
| J1 | JUNCTION | 0.00 | 2.01 | 9672 17:00 | 0 | 10.9 | 0.000 |
| 3F | OUTFALL | 8.36 | 10.37 | 9672 17:00 | 56.3 | 67.2 | 0.000 |
| S3F | STORAGE | 2.01 | 2.01 | 9672 17:00 | 10.9 | 10.9 | 0.000 |

**********
Node Flooding Summary
**********

No nodes were flooded.

**********
Storage Volume Summary
**********

| Storage Unit | Average Volume 1000 ft3 | Avg Pcnt Full | Evap Pcnt Loss | Exfil Pcnt Loss | Maximum Volume 1000 ft3 | Max Pcnt Full | Time of Max Occurrence days hr:min | Maximum Outflow CFS |
|---|---|---|---|---|---|---|---|---|
| S3F | 0.035 | 0 | 0 | 0 | 4.008 | 56 | 9672 17:00 | 2.01 |

**********
Outfall Loading Summary
**********

| Outfall Node | Flow Freq Pcnt | Avg Flow CFS | Max Flow CFS | Total Volume 10^6 gal |
|---|---|---|---|---|
| 3F | 11.06 | 0.05 | 10.37 | 67.207 |
| System | 11.06 | 0.05 | 10.37 | 67.207 |

**********
Link Flow Summary
**********

| Link | Type | Maximum \|Flow\| CFS | Time of Max Occurrence days hr:min | Maximum \|Veloc\| ft/sec | Max/ Full Flow | Max/ Full Depth |
|---|---|---|---|---|---|---|
| C11 | CONDUIT | 2.01 | 9672 17:00 | 1.93 | 0.04 | 0.14 |
| OR1 | ORIFICE | 0.03 | 9672 17:00 | | | 0.00 |
| OR2 | ORIFICE | 0.05 | 9672 17:00 | | | 0.00 |
| W1 | WEIR | 1.93 | 9672 17:00 | | | 0.00 |

**********
Conduit Surcharge Summary
**********

No conduits were surcharged.

Analysis begun on:  Thu Jun  6 17:01:28 2024
Analysis ended on:  Thu Jun  6 17:02:33 2024
Total elapsed time: 00:01:05

EPA STORM WATER MANAGEMENT MODEL - VERSION 5.1 (Build 5.1.015)
---
OBR Post Condition Basin 3G

**********
Element Count
**********
Number of rain gages ..... 1
Number of subcatchments ... 2
Number of nodes ..... 3
Number of links ..... 6
Number of pollutants ..... 0
Number of land uses ..... 0

**********
Raingage Summary
**********

| Name | Data Source | Data Type | Recording Interval |
|---|---|---|---|
| Fallbrook | Fallbrook | INTENSITY | 60 min. |

**********
Subcatchment Summary
**********

| Name | Area | Width | %Imperv | %Slope | Rain Gage | Outlet |
|---|---|---|---|---|---|---|
| 15 | 2.11 | 60.70 | 54.50 | 1.7600 | Fallbrook | BMP3G |
| BMP3G | 0.04 | 17.82 | 0.00 | 0.1000 | Fallbrook | 3G |

**********
LID Control Summary
**********

| Subcatchment | LID Control | No. of Units | Unit Area | Unit Width | % Area Covered | % Imperv Treated | % Perv Treated |
|---|---|---|---|---|---|---|---|
| BMP3G | 3G | 1 | 1852.00 | 0.00 | 99.99 | 100.00 | 0.00 |

**********
Node Summary
**********

| Name | Type | Invert Elev. | Max. Depth | Ponded Area | External Inflow |
|---|---|---|---|---|---|
| R5I | JUNCTION | 1.00 | 10.00 | 0.0 | |
| 3GOUT | OUTFALL | 0.00 | 4.00 | 0.0 | |
| 3G | STORAGE | 1.00 | 3.25 | 0.0 | |

**********
Link Summary
**********

| Name | From Node | To Node | Type | Length | %Slope | Roughness |
|---|---|---|---|---|---|---|
| C12 | R5I | 3GOUT | CONDUIT | 10.0 | 10.0504 | 0.1300 |
| OR1 | 3G | R5I | ORIFICE | | | |
| OR2 | 3G | R5I | ORIFICE | | | |
| OR3 | 3G | R5I | ORIFICE | | | |
| OR5 | 3G | R5I | ORIFICE | | | |
| W1 | 3G | R5I | WEIR | | | |

**********
Cross Section Summary
**********

| Conduit | Shape | Full Depth | Full Area | Hyd. Rad. | Max. Width | No. of Barrels | Full Flow |
|---|---|---|---|---|---|---|---|
| C12 | CIRCULAR | 4.00 | 12.57 | 1.00 | 4.00 | 1 | 45.54 |

**********
NOTE: The summary statistics displayed in this report are
based on results found at every computational time step,
not just on results from each reporting time step.
**********

**********
Analysis Options
**********
Flow Units ..... CFS
Process Models:
  Rainfall/Runoff ..... YES
  RDII ..... NO
  Snowmelt ..... NO
  Groundwater ..... NO
  Flow Routing ..... YES
  Ponding Allowed ..... YES

```
  Water Quality ..... NO
Infiltration Method ..... GREEN_AMPT
Flow Routing Method ..... KINWAVE
Starting Date ..... 07/25/1951 04:00:00
Ending Date ..... 05/26/2008 08:00:00
Antecedent Dry Days ..... 0.0
Report Time Step ..... 01:00:00
Wet Time Step ..... 00:30:00
Dry Time Step ..... 00:30:00
Routing Time Step ..... 30.00 sec
```

| Runoff Quantity Continuity | Volume acre-feet | Depth inches |
|---|---|---|
| Initial LID Storage ..... | 0.007 | 0.041 |
| Total Precipitation ..... | 156.309 | 871.400 |
| Evaporation Loss ..... | 15.990 | 89.142 |
| Infiltration Loss ..... | 63.589 | 354.502 |
| Surface Runoff ..... | 17.529 | 97.723 |
| LID Drainage ..... | 61.217 | 341.278 |
| Final Storage ..... | 0.018 | 0.099 |
| Continuity Error (%) ..... | -1.297 | |

| Flow Routing Continuity | Volume acre-feet | Volume 10^6 gal |
|---|---|---|
| Dry Weather Inflow ..... | 0.000 | 0.000 |
| Wet Weather Inflow ..... | 78.747 | 25.661 |
| Groundwater Inflow ..... | 0.000 | 0.000 |
| RDII Inflow ..... | 0.000 | 0.000 |
| External Inflow ..... | 0.000 | 0.000 |
| External Outflow ..... | 78.712 | 25.650 |
| Flooding Loss ..... | 0.000 | 0.000 |
| Evaporation Loss ..... | 0.000 | 0.000 |
| Exfiltration Loss ..... | 0.000 | 0.000 |
| Initial Stored Volume .... | 0.000 | 0.000 |
| Final Stored Volume ..... | 0.000 | 0.000 |
| Continuity Error (%) ..... | 0.043 | |

```
*******************************
Highest Flow Instability Indexes
*******************************
All links are stable.
```

```
************************
Routing Time Step Summary
************************
Minimum Time Step           :    30.00 sec
Average Time Step           :    30.00 sec
Maximum Time Step           :    30.00 sec
Percent in Steady State     :     0.00
Average Iterations per Step :     1.00
Percent Not Converging      :     0.00
```

```
*************************
Subcatchment Runoff Summary
*************************
```

| Subcatchment | Total Precip in | Total Runon in | Total Evap in | Total Infil in | Imperv Runoff in | Perv Runoff in | Total Runoff in | Total Runoff 10^6 gal | Peak Runoff CFS | Runoff Coeff |
|---|---|---|---|---|---|---|---|---|---|---|
| 15 | 871.40 | 0.00 | 67.34 | 361.65 | 420.96 | 33.03 | 453.99 | 26.01 | 2.76 | 0.521 |
| BMP3G | 871.40 | 22528.44 | 1171.20 | 0.00 | 0.00 | 0.00 | 22223.86 | 25.66 | 2.76 | 0.950 |

```
**********************
LID Performance Summary
**********************
```

| Subcatchment | LID Control | Total Inflow in | Evap Loss in | Infil Loss in | Surface Outflow in | Drain Outflow in | Initial Storage in | Final Storage in | Continuity Error % |
|---|---|---|---|---|---|---|---|---|---|
| BMP3G | 3G | 23399.84 | 1171.35 | 0.00 | 4947.76 | 17278.96 | 2.10 | 5.01 | -0.00 |

```
******************
Node Depth Summary
******************
```

| Node | Type | Average Depth Feet | Maximum Depth Feet | Maximum HGL Feet | Time of Max Occurrence days hr:min | Reported Max Depth Feet |
|---|---|---|---|---|---|---|
| R5I | JUNCTION | 0.00 | 0.64 | 1.64 | 9672 17:33 | 0.57 |
| 3GOUT | OUTFALL | 0.00 | 0.64 | 0.64 | 9672 17:33 | 0.57 |
| 3G | STORAGE | 0.01 | 1.35 | 2.35 | 9672 17:33 | 1.18 |

**********
Node Inflow Summary
**********

| Node | Type | Maximum Lateral Inflow CFS | Maximum Total Inflow CFS | Time of Max Occurrence days hr:min | Lateral Inflow Volume 10^6 gal | Total Inflow Volume 10^6 gal | Flow Balance Error Percent |
|---|---|---|---|---|---|---|---|
| R5I | JUNCTION | 0.00 | 2.51 | 9672 17:33 | 0 | 5.71 | 0.000 |
| 3GOUT | OUTFALL | 0.07 | 2.58 | 9672 17:33 | 19.9 | 25.6 | 0.000 |
| 3G | STORAGE | 2.69 | 2.69 | 9672 17:30 | 5.71 | 5.71 | 0.010 |

**********
Node Flooding Summary
**********

No nodes were flooded.

**********
Storage Volume Summary
**********

| Storage Unit | Average Volume 1000 ft3 | Avg Pcnt Full | Evap Pcnt Loss | Exfil Pcnt Loss | Maximum Volume 1000 ft3 | Max Pcnt Full | Time of Max Occurrence days hr:min | Maximum Outflow CFS |
|---|---|---|---|---|---|---|---|---|
| 3G | 0.019 | 0 | 0 | 0 | 4.072 | 33 | 9672 17:33 | 2.51 |

**********
Outfall Loading Summary
**********

| Outfall Node | Flow Freq Pcnt | Avg Flow CFS | Max Flow CFS | Total Volume 10^6 gal |
|---|---|---|---|---|
| 3GOUT | 5.63 | 0.03 | 2.58 | 25.648 |
| System | 5.63 | 0.03 | 2.58 | 25.648 |

**********
Link Flow Summary
**********

| Link | Type | Maximum \|Flow\| CFS | Time of Max Occurrence days hr:min | Maximum \|Veloc\| ft/sec | Max/ Full Flow | Max/ Full Depth |
|---|---|---|---|---|---|---|
| C12 | CONDUIT | 2.51 | 9672 17:33 | 1.95 | 0.06 | 0.16 |
| OR1 | ORIFICE | 0.02 | 9672 17:33 | | | 0.00 |
| OR2 | ORIFICE | 0.83 | 9672 17:33 | | | 0.00 |
| OR3 | ORIFICE | 0.83 | 9672 17:33 | | | 0.00 |
| OR5 | ORIFICE | 0.83 | 9672 17:33 | | | 0.00 |
| W1 | WEIR | 0.00 | 0 00:00 | | | 0.00 |

**********
Conduit Surcharge Summary
**********

No conduits were surcharged.

Analysis begun on:  Mon Feb 26 09:05:01 2024
Analysis ended on:  Mon Feb 26 09:05:52 2024
Total elapsed time: 00:00:51

EPA STORM WATER MANAGEMENT MODEL - VERSION 5.1 (Build 5.1.015)
---
OBR Post Condition Basin 3H

**********
Element Count
**********
Number of rain gages ..... 1
Number of subcatchments ... 4
Number of nodes ..... 4
Number of links ..... 7
Number of pollutants ..... 0
Number of land uses ..... 0

**********
Raingage Summary
**********

| Name | Data Source | Data Type | Recording Interval |
|---|---|---|---|
| Fallbrook | Fallbrook | INTENSITY | 60 min. |

**********
Subcatchment Summary
**********

| Name | Area | Width | %Imperv | %Slope | Rain Gage | Outlet |
|---|---|---|---|---|---|---|
| DMA16 | 1.97 | 55.34 | 51.10 | 6.6500 | Fallbrook | S3H |
| DMA17 | 4.78 | 233.00 | 15.00 | 0.5000 | Fallbrook | S3I |
| Existing_Bypass | 2.27 | 205.00 | 43.00 | 6.8000 | Fallbrook | POC |
| Existing_Bypass_2 | 17.08 | 600.00 | 0.00 | 10.0000 | Fallbrook | POC |

**********
LID Control Summary
**********

| Subcatchment | LID Control | No. of Units | Unit Area | Unit Width | % Area Covered | % Imperv Treated | % Perv Treated |
|---|---|---|---|---|---|---|---|
| DMA16 | 3H | 1 | 1757.00 | 0.00 | 2.05 | 100.00 | 0.00 |
| DMA17 | 3I | 1 | 2992.00 | 0.00 | 1.44 | 100.00 | 0.00 |

**********
Node Summary
**********

| Name | Type | Invert Elev. | Max. Depth | Ponded Area | External Inflow |
|---|---|---|---|---|---|
| J1 | JUNCTION | 0.00 | 4.00 | 0.0 | |
| POC | OUTFALL | 0.00 | 2.00 | 0.0 | |
| S3H | STORAGE | 0.00 | 2.75 | 0.0 | |
| S3I | STORAGE | 0.00 | 4.25 | 0.0 | |

**********
Link Summary
**********

| Name | From Node | To Node | Type | Length | %Slope | Roughness |
|---|---|---|---|---|---|---|
| C1 | J1 | POC | CONDUIT | 300.0 | 0.6667 | 0.0120 |
| OR1 | S3I | J1 | ORIFICE | | | |
| OR2-3H | S3H | POC | ORIFICE | | | |
| OR3 | S3I | J1 | ORIFICE | | | |
| OR4-3H | S3H | POC | ORIFICE | | | |
| W1-3H | S3H | POC | WEIR | | | |
| W2 | S3I | J1 | WEIR | | | |

**********
Cross Section Summary
**********

| Conduit | Shape | Full Depth | Full Area | Hyd. Rad. | Max. Width | No. of Barrels | Full Flow |
|---|---|---|---|---|---|---|---|
| C1 | CIRCULAR | 2.00 | 3.14 | 0.50 | 2.00 | 1 | 20.01 |

**********
NOTE: The summary statistics displayed in this report are
based on results found at every computational time step,
not just on results from each reporting time step.
**********

**********
Analysis Options
**********
Flow Units ..... CFS
Process Models:
  Rainfall/Runoff ..... YES
  RDII ..... NO

```
  Snowmelt ............... NO
  Groundwater ............ NO
  Flow Routing ........... YES
  Ponding Allowed ........ YES
  Water Quality .......... NO
Infiltration Method ...... GREEN_AMPT
Flow Routing Method ...... KINWAVE
Starting Date ............ 07/25/1951 04:00:00
Ending Date .............. 05/26/2008 08:00:00
Antecedent Dry Days ...... 0.0
Report Time Step ......... 01:00:00
Wet Time Step ............ 00:30:00
Dry Time Step ............ 00:30:00
Routing Time Step ........ 30.00 sec
```

| Runoff Quantity Continuity | Volume acre-feet | Depth inches |
|---|---|---|
| Initial LID Storage ..... | 0.019 | 0.009 |
| Total Precipitation ..... | 1895.295 | 871.400 |
| Evaporation Loss ..... | 48.571 | 22.332 |
| Infiltration Loss ..... | 1527.166 | 702.145 |
| Surface Runoff ..... | 226.339 | 104.064 |
| LID Drainage ..... | 105.671 | 48.584 |
| Final Storage ..... | 0.045 | 0.021 |
| Continuity Error (%) ..... | -0.658 | |

| Flow Routing Continuity | Volume acre-feet | Volume 10^6 gal |
|---|---|---|
| Dry Weather Inflow ..... | 0.000 | 0.000 |
| Wet Weather Inflow ..... | 332.010 | 108.190 |
| Groundwater Inflow ..... | 0.000 | 0.000 |
| RDII Inflow ..... | 0.000 | 0.000 |
| External Inflow ..... | 0.000 | 0.000 |
| External Outflow ..... | 331.999 | 108.187 |
| Flooding Loss ..... | 0.000 | 0.000 |
| Evaporation Loss ..... | 0.000 | 0.000 |
| Exfiltration Loss ..... | 0.000 | 0.000 |
| Initial Stored Volume .... | 0.000 | 0.000 |
| Final Stored Volume ..... | 0.000 | 0.000 |
| Continuity Error (%) ..... | 0.003 | |

```
*********************************
Highest Flow Instability Indexes
*********************************
All links are stable.
```

```
*************************
Routing Time Step Summary
*************************
Minimum Time Step           :    30.00 sec
Average Time Step           :    30.00 sec
Maximum Time Step           :    30.00 sec
Percent in Steady State     :     0.00
Average Iterations per Step :     1.00
Percent Not Converging      :     0.00
```

```
****************************
Subcatchment Runoff Summary
****************************
```

| Subcatchment | Total Precip in | Total Runon in | Total Evap in | Total Infil in | Imperv Runoff in | Perv Runoff in | Total Runoff in | Total Runoff 10^6 gal | Peak Runoff CFS | Runoff Coeff |
|---|---|---|---|---|---|---|---|---|---|---|
| DMA16 | 871.40 | 0.00 | 83.65 | 372.89 | 391.98 | 43.04 | 428.75 | 22.93 | 2.64 | 0.492 |
| DMA17 | 871.40 | 0.00 | 37.33 | 676.50 | 116.49 | 49.41 | 163.01 | 21.16 | 5.26 | 0.187 |
| Existing_Bypass | 871.40 | 0.00 | 49.24 | 438.58 | 340.62 | 58.31 | 398.92 | 24.59 | 3.06 | 0.458 |
| Existing_Bypass_2 | 871.40 | 0.00 | 7.49 | 782.33 | 0.00 | 85.17 | 85.17 | 39.50 | 21.08 | 0.098 |

```
***********************
LID Performance Summary
***********************
```

| Subcatchment | LID Control | Total Inflow in | Evap Loss in | Infil Loss in | Surface Outflow in | Drain Outflow in | Initial Storage in | Final Storage in | Continuity Error % |
|---|---|---|---|---|---|---|---|---|---|
| DMA16 | 3H | 20016.49 | 1175.47 | 0.00 | 839.58 | 17999.45 | 2.10 | 5.00 | -0.00 |
| DMA17 | 3I | 8978.21 | 1070.01 | 0.00 | 13.27 | 7892.19 | 2.10 | 5.00 | -0.00 |

```
******************
Node Depth Summary
******************
```

| Node | Type | Average Depth Feet | Maximum Depth Feet | Maximum HGL Feet | Time of Max Occurrence days hr:min | Reported Max Depth Feet |
|---|---|---|---|---|---|---|
| J1 | JUNCTION | 2.00 | 2.66 | 2.66 | 9672 17:04 | 2.65 |
| POC | OUTFALL | 0.00 | 0.66 | 0.66 | 9672 17:04 | 0.65 |
| S3H | STORAGE | 0.00 | 1.59 | 1.59 | 9672 17:01 | 1.59 |
| S3I | STORAGE | 0.00 | 3.16 | 3.16 | 9672 17:04 | 3.14 |

**********
Node Inflow Summary
**********

| Node | Type | Maximum Lateral Inflow CFS | Maximum Total Inflow CFS | Time of Max Occurrence days hr:min | Lateral Inflow Volume 10^6 gal | Total Inflow Volume 10^6 gal | Flow Balance Error Percent |
|---|---|---|---|---|---|---|---|
| J1 | JUNCTION | 0.00 | 4.65 | 9672 17:04 | 0 | 6.44 | 0.000 |
| POC | OUTFALL | 24.67 | 31.66 | 9672 17:00 | 98.5 | 108 | 0.000 |
| S3H | STORAGE | 2.45 | 2.45 | 9672 17:00 | 3.22 | 3.22 | 0.016 |
| S3I | STORAGE | 4.91 | 4.91 | 9672 17:00 | 6.44 | 6.44 | 0.012 |

**********
Node Flooding Summary
**********

No nodes were flooded.

**********
Storage Volume Summary
**********

| Storage Unit | Average Volume 1000 ft3 | Avg Pcnt Full | Evap Pcnt Loss | Exfil Pcnt Loss | Maximum Volume 1000 ft3 | Max Pcnt Full | Time of Max Occurrence days hr:min | Maximum Outflow CFS |
|---|---|---|---|---|---|---|---|---|
| S3H | 0.002 | 0 | 0 | 0 | 4.305 | 52 | 9672 17:01 | 2.43 |
| S3I | 0.003 | 0 | 0 | 0 | 9.902 | 68 | 9672 17:03 | 4.65 |

**********
Outfall Loading Summary
**********

| Outfall Node | Flow Freq Pcnt | Avg Flow CFS | Max Flow CFS | Total Volume 10^6 gal |
|---|---|---|---|---|
| POC | 3.42 | 0.24 | 31.66 | 108.179 |
| System | 3.42 | 0.24 | 31.66 | 108.179 |

**********
Link Flow Summary
**********

| Link | Type | Maximum \|Flow\| CFS | Time of Max Occurrence days hr:min | Maximum \|Veloc\| ft/sec | Max/ Full Flow | Max/ Full Depth |
|---|---|---|---|---|---|---|
| C1 | CONDUIT | 4.65 | 9672 17:04 | 5.19 | 0.23 | 0.33 |
| OR1 | ORIFICE | 1.14 | 9672 17:04 | | | 0.00 |
| OR2-3H | ORIFICE | 0.25 | 9672 17:01 | | | 0.00 |
| OR3 | ORIFICE | 0.50 | 9672 17:04 | | | 0.00 |
| OR4-3H | ORIFICE | 0.19 | 9672 17:01 | | | 0.00 |
| W1-3H | WEIR | 2.00 | 9672 17:01 | | | 0.00 |
| W2 | WEIR | 3.00 | 9672 17:04 | | | 0.00 |

**********
Conduit Surcharge Summary
**********

No conduits were surcharged.

Analysis begun on:  Thu Feb 29 10:21:20 2024
Analysis ended on:  Thu Feb 29 10:22:36 2024
Total elapsed time: 00:01:16

EPA STORM WATER MANAGEMENT MODEL - VERSION 5.1 (Build 5.1.015)
---
Post Condition 3J

**********
Element Count
**********
Number of rain gages ..... 1
Number of subcatchments ... 4
Number of nodes ..... 4
Number of links ..... 5
Number of pollutants ..... 0
Number of land uses ..... 0

**********
Raingage Summary
**********

| Name | Data Source | Data Type | Recording Interval |
|---|---|---|---|
| Fallbrook | FallbrookHourly | INTENSITY | 60 min. |

**********
Subcatchment Summary
**********

| Name | Area | Width | %Imperv | %Slope | Rain Gage | Outlet |
|---|---|---|---|---|---|---|
| Basin3J | 0.06 | 118.00 | 0.00 | 1.0000 | Fallbrook | SU3J |
| Basin3K | 0.06 | 500.00 | 0.00 | 1.0000 | Fallbrook | SU3K |
| DMA19 | 2.46 | 175.00 | 10.00 | 1.0000 | Fallbrook | Basin3K |
| DMA22 | 2.31 | 325.00 | 11.00 | 1.0000 | Fallbrook | Basin3J |

**********
LID Control Summary
**********

| Subcatchment | LID Control | No. of Units | Unit Area | Unit Width | % Area Covered | % Imperv Treated | % Perv Treated |
|---|---|---|---|---|---|---|---|
| Basin3J | 3J | 1 | 2628.00 | 0.00 | 98.90 | 100.00 | 0.00 |
| Basin3K | 3K | 1 | 2512.00 | 0.00 | 96.11 | 100.00 | 0.00 |

**********
Node Summary
**********

| Name | Type | Invert Elev. | Max. Depth | Ponded Area | External Inflow |
|---|---|---|---|---|---|
| J1 | JUNCTION | 0.00 | 8.00 | 0.0 | |
| 3J | OUTFALL | 0.00 | 3.00 | 0.0 | |
| SU3J | STORAGE | 2.00 | 4.25 | 0.0 | |
| SU3K | STORAGE | 0.00 | 4.25 | 0.0 | |

**********
Link Summary
**********

| Name | From Node | To Node | Type | Length | %Slope | Roughness |
|---|---|---|---|---|---|---|
| C1 | J1 | 3J | CONDUIT | 100.0 | 0.5000 | 0.0120 |
| OR1 | SU3J | J1 | ORIFICE | | | |
| OR2 | SU3K | J1 | ORIFICE | | | |
| W1 | SU3J | J1 | WEIR | | | |
| W2 | SU3K | J1 | WEIR | | | |

**********
Cross Section Summary
**********

| Conduit | Shape | Full Depth | Full Area | Hyd. Rad. | Max. Width | No. of Barrels | Full Flow |
|---|---|---|---|---|---|---|---|
| C1 | CIRCULAR | 3.00 | 7.07 | 0.75 | 3.00 | 1 | 51.09 |

**********
NOTE: The summary statistics displayed in this report are
based on results found at every computational time step,
not just on results from each reporting time step.
**********

**********
Analysis Options
**********
Flow Units ..... CFS
Process Models:
  Rainfall/Runoff ..... YES
  RDII ..... NO
  Snowmelt ..... NO
  Groundwater ..... NO

```
  Flow Routing ........... YES
  Ponding Allowed ........ NO
  Water Quality .......... NO
Infiltration Method ...... GREEN_AMPT
Flow Routing Method ...... DYNWAVE
Surcharge Method ......... EXTRAN
Starting Date ............ 07/25/1951 04:00:00
Ending Date .............. 05/26/2008 08:00:00
Antecedent Dry Days ...... 0.0
Report Time Step ......... 01:00:00
Wet Time Step ............ 00:30:00
Dry Time Step ............ 00:30:00
Routing Time Step ........ 30.00 sec
Variable Time Step ....... YES
Maximum Trials ........... 8
Number of Threads ........ 1
Head Tolerance ........... 0.005000 ft


*************************        Volume         Depth
Runoff Quantity Continuity     acre-feet        inches
*************************     ---------       -------
Initial LID Storage ......         0.021         0.051
Total Precipitation ......       355.096       871.400
Evaporation Loss .........        13.739        33.716
Infiltration Loss ........       275.169       675.261
Surface Runoff ...........        66.272       162.630
LID Drainage .............         2.497         6.126
Final Storage ............         0.021         0.052
Continuity Error (%) .....        -0.727


*************************        Volume        Volume
Flow Routing Continuity        acre-feet      10^6 gal
*************************     ---------      ---------
Dry Weather Inflow .......         0.000         0.000
Wet Weather Inflow .......        68.732        22.397
Groundwater Inflow .......         0.000         0.000
RDII Inflow ..............         0.000         0.000
External Inflow ..........         0.000         0.000
External Outflow .........        67.869        22.116
Flooding Loss ............         0.000         0.000
Evaporation Loss .........         0.000         0.000
Exfiltration Loss ........         0.000         0.000
Initial Stored Volume ....         0.000         0.000
Final Stored Volume ......         0.035         0.011
Continuity Error (%) .....         1.205


*************************
Highest Continuity Errors
*************************
Node J1 (-1.35%)


***************************
Time-Step Critical Elements
***************************
Link C1 (1.28%)


*******************************
Highest Flow Instability Indexes
*******************************
Link OR2 (17)
Link C1 (3)


************************
Routing Time Step Summary
************************
Minimum Time Step           :     0.50 sec
Average Time Step           :    29.92 sec
Maximum Time Step           :    30.00 sec
Percent in Steady State     :     0.00
Average Iterations per Step :     3.57
Percent Not Converging      :     0.00
Time Step Frequencies       :
   30.000 - 13.228 sec      :    99.96 %
   13.228 -  5.833 sec      :     0.03 %
    5.833 -  2.572 sec      :     0.00 %
    2.572 -  1.134 sec      :     0.00 %
    1.134 -  0.500 sec      :     0.00 %


***************************
Subcatchment Runoff Summary
***************************
```

| Subcatchment | Total Precip in | Total Runon in | Total Evap in | Total Infil in | Imperv Runoff in | Perv Runoff in | Total Runoff in | Total Runoff 10^6 gal | Peak Runoff CFS | Runoff Coeff |
|---|---|---|---|---|---|---|---|---|---|---|
| Basin3J | 871.40 | 6673.62 | 611.16 | 22.24 | 0.00 | 6664.44 | 6915.54 | 11.45 | 3.01 | 0.917 |

| | | | | | | | | | | |
|---|---|---|---|---|---|---|---|---|---|---|
| Basin3K | 871.40 | 6512.95 | 595.22 | 78.10 | 0.00 | 6478.81 | 6722.82 | 10.95 | 3.02 | 0.910 |
| DMA19 | 871.40 | 0.00 | 19.02 | 699.12 | 79.27 | 79.58 | 158.85 | 10.61 | 2.97 | 0.182 |
| DMA22 | 871.40 | 0.00 | 19.53 | 682.62 | 87.33 | 88.98 | 176.31 | 11.05 | 2.96 | 0.202 |

**********
LID Performance Summary
**********

| Subcatchment | LID Control | Total Inflow in | Evap Loss in | Infil Loss in | Surface Outflow in | Drain Outflow in | Initial Storage in | Final Storage in | Continuity Error % |
|---|---|---|---|---|---|---|---|---|---|
| Basin3J | 3J | 871.40 | 617.45 | 0.00 | 0.00 | 253.90 | 2.10 | 2.16 | -0.00 |
| Basin3K | 3K | 871.40 | 617.45 | 0.00 | 0.00 | 253.90 | 2.10 | 2.16 | -0.00 |

**********
Node Depth Summary
**********

| Node | Type | Average Depth Feet | Maximum Depth Feet | Maximum HGL Feet | Time of Max Occurrence days hr:min | Reported Max Depth Feet |
|---|---|---|---|---|---|---|
| J1 | JUNCTION | 0.49 | 1.18 | 1.18 | 9672 17:31 | 1.11 |
| 3J | OUTFALL | 0.00 | 0.68 | 0.68 | 9672 17:31 | 0.61 |
| SU3J | STORAGE | 0.00 | 0.96 | 2.96 | 9672 17:30 | 0.94 |
| SU3K | STORAGE | 0.49 | 1.21 | 1.21 | 9672 17:31 | 1.13 |

**********
Node Inflow Summary
**********

| Node | Type | Maximum Lateral Inflow CFS | Maximum Total Inflow CFS | Time of Max Occurrence days hr:min | Lateral Inflow Volume 10^6 gal | Total Inflow Volume 10^6 gal | Flow Balance Error Percent |
|---|---|---|---|---|---|---|---|
| J1 | JUNCTION | 0.00 | 6.12 | 9672 17:31 | 0 | 28.3 | -1.337 |
| 3J | OUTFALL | 0.11 | 5.93 | 9672 17:31 | 0.813 | 22.1 | 0.000 |
| SU3J | STORAGE | 2.96 | 2.96 | 9672 17:30 | 11 | 11 | 0.001 |
| SU3K | STORAGE | 2.97 | 2.97 | 9672 17:30 | 10.6 | 17.9 | 3.786 |

**********
Node Surcharge Summary
**********

No nodes were surcharged.

**********
Node Flooding Summary
**********

No nodes were flooded.

**********
Storage Volume Summary
**********

| Storage Unit | Average Volume 1000 ft3 | Avg Pcnt Full | Evap Pcnt Loss | Exfil Pcnt Loss | Maximum Volume 1000 ft3 | Max Pcnt Full | Time of Max Occurrence days hr:min | Maximum Outflow CFS |
|---|---|---|---|---|---|---|---|---|
| SU3J | 0.015 | 0 | 0 | 0 | 3.337 | 17 | 9672 17:30 | 2.93 |
| SU3K | 1.524 | 9 | 0 | 0 | 3.979 | 23 | 9672 17:31 | 3.21 |

**********
Outfall Loading Summary
**********

| Outfall Node | Flow Freq Pcnt | Avg Flow CFS | Max Flow CFS | Total Volume 10^6 gal |
|---|---|---|---|---|
| 3J | 6.25 | 0.04 | 5.93 | 22.114 |
| System | 6.25 | 0.04 | 5.93 | 22.114 |

**********
Link Flow Summary
**********

| | Maximum | Time of Max | Maximum | Max/ | Max/ |
|---|---|---|---|---|---|

| Link | Type | \|Flow\| CFS | Occurrence days | hr:min | \|Veloc\| ft/sec | Full Flow | Full Depth |
|---|---|---|---|---|---|---|---|
| C1 | CONDUIT | 5.84 | 9672 | 17:31 | 4.80 | 0.11 | 0.23 |
| OR1 | ORIFICE | 0.22 | 9672 | 17:30 | | | 1.00 |
| OR2 | ORIFICE | 0.09 | 11543 | 12:42 | | | 1.00 |
| W1 | WEIR | 2.72 | 9672 | 17:30 | | | 0.21 |
| W2 | WEIR | 3.17 | 9672 | 17:33 | | | 0.46 |

**********
Flow Classification Summary
**********

| Conduit | Adjusted /Actual Length | Fraction of Time in Flow Class: Dry | Up Dry | Down Dry | Sub Crit | Sup Crit | Up Crit | Down Crit | Norm Ltd | Inlet Ctrl |
|---|---|---|---|---|---|---|---|---|---|---|
| C1 | 1.00 | 0.90 | 0.02 | 0.00 | 0.02 | 0.05 | 0.00 | 0.00 | 0.00 | 0.00 |

**********
Conduit Surcharge Summary
**********

No conduits were surcharged.

Analysis begun on: Mon Jul 17 08:43:23 2023
Analysis ended on: Mon Jul 17 08:46:24 2023
Total elapsed time: 00:03:01

EPA STORM WATER MANAGEMENT MODEL - VERSION 5.1 (Build 5.1.015)
---
Post Condition EQ Road

**********
Element Count
**********
Number of rain gages ..... 1
Number of subcatchments ... 2
Number of nodes ..... 1
Number of links ..... 0
Number of pollutants ..... 0
Number of land uses ..... 0

**********
Raingage Summary
**********

| Name | Data Source | Data Type | Recording Interval |
|---|---|---|---|
| Fallbrook | Fallbrook | INTENSITY | 60 min. |

**********
Subcatchment Summary
**********

| Name | Area | Width | %Imperv | %Slope | Rain Gage | Outlet |
|---|---|---|---|---|---|---|
| EQRoad | 4.49 | 1200.00 | 100.00 | 1.0000 | Fallbrook | POC_EQ |
| TributaryToEQRoad | 371.45 | 5138.00 | 0.00 | 25.0000 | Fallbrook | POC_EQ |

**********
Node Summary
**********

| Name | Type | Invert Elev. | Max. Depth | Ponded Area | External Inflow |
|---|---|---|---|---|---|
| POC_EQ | OUTFALL | 0.00 | 0.00 | 0.0 | |

**********
NOTE: The summary statistics displayed in this report are
based on results found at every computational time step,
not just on results from each reporting time step.
**********

**********
Analysis Options
**********
Flow Units ..... CFS
Process Models:
  Rainfall/Runoff ..... YES
  RDII ..... NO
  Snowmelt ..... NO
  Groundwater ..... NO
  Flow Routing ..... NO
  Water Quality ..... NO
Infiltration Method ..... GREEN_AMPT
Starting Date ..... 07/25/1951 04:00:00
Ending Date ..... 05/26/2008 08:00:00
Antecedent Dry Days ..... 0.0
Report Time Step ..... 01:00:00
Wet Time Step ..... 00:30:00
Dry Time Step ..... 00:30:00

| Runoff Quantity Continuity | Volume acre-feet | Depth inches |
|---|---|---|
| Total Precipitation ..... | 27299.510 | 871.400 |
| Evaporation Loss ..... | 344.638 | 11.001 |
| Infiltration Loss ..... | 24025.051 | 766.879 |
| Surface Runoff ..... | 3035.041 | 96.878 |
| Final Storage ..... | 0.000 | 0.000 |
| Continuity Error (%) ..... | -0.385 | |

| Flow Routing Continuity | Volume acre-feet | Volume 10^6 gal |
|---|---|---|
| Dry Weather Inflow ..... | 0.000 | 0.000 |
| Wet Weather Inflow ..... | 3035.041 | 989.014 |
| Groundwater Inflow ..... | 0.000 | 0.000 |
| RDII Inflow ..... | 0.000 | 0.000 |
| External Inflow ..... | 0.000 | 0.000 |
| External Outflow ..... | 3035.041 | 989.014 |
| Flooding Loss ..... | 0.000 | 0.000 |
| Evaporation Loss ..... | 0.000 | 0.000 |
| Exfiltration Loss ..... | 0.000 | 0.000 |
| Initial Stored Volume .... | 0.000 | 0.000 |
| Final Stored Volume ..... | 0.000 | 0.000 |

Continuity Error (%) .....         0.000

**************************
Subcatchment Runoff Summary
**************************

| Subcatchment | Total Precip in | Total Runon in | Total Evap in | Total Infil in | Imperv Runoff in | Perv Runoff in | Total Runoff in | Total Runoff 10^6 gal | Peak Runoff CFS | Runoff Coeff |
|---|---|---|---|---|---|---|---|---|---|---|
| EQRoad | 871.40 | 0.00 | 108.52 | 0.00 | 788.91 | 0.00 | 788.91 | 96.18 | 6.33 | 0.905 |
| TributaryToEQRoad | 871.40 | 0.00 | 9.82 | 776.15 | 0.00 | 88.51 | 88.51 | 892.76 | 433.18 | 0.102 |

Analysis begun on:  Tue Jul  4 13:57:28 2023
Analysis ended on:  Tue Jul  4 13:57:39 2023
Total elapsed time: 00:00:11

# Attachment 5

# Flow Frequency Statistical Analysis

**Pre Condition**

Statistics - Node 1A Total Inflow

| Rank | Start Date | Event Duration (hours) | Event Peak (CFS) | Exceedance Frequency (percent) | Return Period (years) | (years) |
|---|---|---|---|---|---|---|
| 1 | 1/16/1978 | 7 | 49.756 | 0.41 | 58 | |
| 2 | 1/1/1982 | 25 | 45.994 | 0.81 | 29 | |
| 3 | 1/4/1995 | 11 | 32.968 | 1.22 | 19.33 | |
| 4 | 1/10/1978 | 4 | 32.378 | 1.63 | 14.5 | |
| 5 | 10/1/1983 | 10 | 30.166 | 2.03 | 11.6 | |
| 6 | 3/5/1995 | 24 | 24.226 | 2.44 | 9.67 | |
| 7 | 4/5/1967 | 2 | 24.176 | 2.85 | 8.29 | |
| 8 | 1/20/1982 | 7 | 23.099 | 3.25 | 7.25 | |
| 9 | 2/22/1998 | 45 | 21.605 | 3.66 | 6.44 | |
| 10 | 2/16/1980 | 106 | 21.11 | 4.07 | 5.8 | |
| 11 | 2/10/1963 | 2 | 21.059 | 4.47 | 5.27 | |
| 12 | 2/22/2004 | 4 | 20.479 | 4.88 | 4.83 | |
| 13 | 1/4/1978 | 10 | 20.145 | 5.28 | 4.46 | |
| 14 | 1/28/1980 | 11 | 19.702 | 5.69 | 4.14 | |
| 15 | 2/7/1978 | 72 | 19.241 | 6.1 | 3.87 | |
| 16 | 12/5/1966 | 46 | 19.01 | 6.5 | 3.63 | |
| 17 | 3/15/1986 | 12 | 18.899 | 6.91 | 3.41 | |
| 18 | 2/25/1969 | 16 | 17.68 | 7.32 | 3.22 | |
| 19 | 1/9/1998 | 4 | 17.029 | 7.72 | 3.05 | |
| 20 | 2/15/1992 | 5 | 16.823 | 8.13 | 2.9 | |
| 21 | 11/22/1965 | 20 | 16.797 | 8.54 | 2.76 | |
| 22 | 1/9/1980 | 55 | 16.622 | 8.94 | 2.64 | |
| 23 | 2/11/1959 | 3 | 16.574 | 9.35 | 2.52 | |
| 24 | 1/25/1969 | 14 | 15.593 | 9.76 | 2.42 | |
| 25 | 1/14/1993 | 3 | 15.49 | 10.16 | 2.32 | |
| 26 | 1/15/1993 | 38 | 15.213 | 10.57 | 2.23 | |
| 27 | 3/17/1982 | 16 | 15.213 | 10.98 | 2.15 | |
| 28 | 3/11/1995 | 7 | 15.187 | 11.38 | 2.07 | |
| 29 | 2/14/1986 | 9 | 14.665 | 11.79 | 2 | |
| 30 | 2/12/1978 | 4 | 13.855 | 12.2 | 1.93 | |
| 31 | 1/11/2005 | 8 | 13.663 | 12.6 | 1.87 | |
| 32 | 2/27/1983 | 14 | 13.564 | 13.01 | 1.81 | |
| 33 | 1/14/1978 | 8 | 13.304 | 13.41 | 1.76 | |
| 34 | 2/11/1973 | 7 | 12.765 | 13.82 | 1.71 | |
| 35 | 2/6/1969 | 8 | 12.755 | 14.23 | 1.66 | |
| 36 | 9/10/1976 | 3 | 12.745 | 14.63 | 1.61 | |
| 37 | 1/6/1993 | 26 | 12.689 | 15.04 | 1.57 | |
| 38 | 2/12/1992 | 22 | 12.599 | 15.45 | 1.53 | |
| 39 | 3/26/1991 | 8 | 11.633 | 15.85 | 1.49 | |
| 40 | 1/9/2005 | 20 | 11.611 | 16.26 | 1.45 | |
| 41 | 1/13/1957 | 6 | 11.458 | 16.67 | 1.41 | |
| 42 | 3/24/1983 | 2 | 11.305 | 17.07 | 1.38 | |
| 43 | 11/24/1983 | 2 | 11.257 | 17.48 | 1.35 | |
| 44 | 1/18/1955 | 4 | 11.179 | 17.89 | 1.32 | |
| 45 | 3/15/1952 | 10 | 11.095 | 18.29 | 1.29 | |
| 46 | 3/8/1968 | 3 | 10.934 | 18.7 | 1.26 | |
| 47 | 2/7/1994 | 5 | 10.866 | 19.11 | 1.23 | |
| 48 | 11/29/1970 | 6 | 10.757 | 19.51 | 1.21 | |
| 49 | 2/14/1980 | 24 | 10.597 | 19.92 | 1.18 | |
| 50 | 3/1/1983 | 46 | 10.549 | 20.33 | 1.16 | |
| 51 | 2/21/2005 | 51 | 10.378 | 20.73 | 1.14 | |
| 52 | 2/13/1954 | 10 | 10.366 | 21.14 | 1.12 | |
| 53 | 1/12/1960 | 6 | 10.362 | 21.54 | 1.09 | |
| 54 | 12/24/1971 | 26 | 10.328 | 21.95 | 1.07 | |
| 55 | 11/30/2007 | 7 | 10.298 | 22.36 | 1.05 | |
| 56 | 2/8/1998 | 7 | 10.111 | 22.76 | 1.04 | |

**10-year Q:** 25.242 cfs
**5-year Q:** 20.703 cfs
**2-year Q:** 14.665 cfs

**Lower Flow Threshold:** 50%

0.5xQ2 : 7.333 cfs

| | | | | | |
|---|---|---|---|---|---|
| 57 | 1/29/1981 | 3 | 9.832 | 23.17 | 1.02 |
| 58 | 1/22/1964 | 4 | 9.817 | 23.58 | 1 |
| 59 | 1/29/1983 | 5 | 9.648 | 23.98 | 0.98 |
| 60 | 11/21/1963 | 3 | 9.63 | 24.39 | 0.97 |
| 61 | 10/19/2004 | 23 | 9.618 | 24.8 | 0.95 |
| 62 | 11/15/1952 | 19 | 9.555 | 25.2 | 0.94 |
| 63 | 1/20/1962 | 6 | 9.555 | 25.61 | 0.92 |
| 64 | 6/10/1990 | 1 | 9.402 | 26.02 | 0.91 |
| 65 | 12/18/1967 | 3 | 9.158 | 26.42 | 0.89 |
| 66 | 1/18/1973 | 4 | 9.158 | 26.83 | 0.88 |
| 67 | 11/29/1985 | 7 | 9.02 | 27.24 | 0.87 |
| 68 | 1/11/2001 | 5 | 9.004 | 27.64 | 0.85 |
| 69 | 4/3/1958 | 4 | 8.334 | 28.05 | 0.84 |
| 70 | 1/16/1952 | 9 | 8.258 | 28.46 | 0.83 |
| 71 | 3/1/1991 | 19 | 8.088 | 28.86 | 0.82 |
| 72 | 1/6/1977 | 32 | 8.025 | 29.27 | 0.81 |
| 73 | 11/14/1972 | 2 | 7.896 | 29.67 | 0.79 |
| 74 | 3/15/1958 | 17 | 7.878 | 30.08 | 0.78 |
| 75 | 12/24/1988 | 5 | 7.849 | 30.49 | 0.77 |
| 76 | 4/1/1982 | 2 | 7.784 | 30.89 | 0.76 |
| 77 | 2/8/1993 | 10 | 7.762 | 31.3 | 0.75 |
| 78 | 12/6/1997 | 7 | 7.572 | 31.71 | 0.74 |
| 79 | 1/15/1979 | 2 | 7.427 | 32.11 | 0.73 |
| 80 | 2/28/1970 | 36 | 7.375 | 32.52 | 0.73 |
| 81 | 2/1/1960 | 3 | 7.348 | 32.93 | 0.72 |
| 82 | 10/18/2004 | 2 | 6.998 | 33.33 | 0.71 |
| 83 | 1/26/1997 | 6 | 6.768 | 33.74 | 0.7 |
| 84 | 2/19/2005 | 2 | 6.598 | 34.15 | 0.69 |
| 85 | 4/11/1967 | 2 | 6.562 | 34.55 | 0.68 |
| 86 | 12/2/1952 | 4 | 6.514 | 34.96 | 0.67 |
| 87 | 1/16/1973 | 2 | 6.481 | 35.37 | 0.67 |
| 88 | 1/27/2008 | 33 | 6.463 | 35.77 | 0.66 |
| 89 | 1/7/1987 | 2 | 6.34 | 36.18 | 0.65 |
| 90 | 2/26/2004 | 7 | 6.292 | 36.59 | 0.64 |
| 91 | 1/10/1995 | 8 | 6.281 | 36.99 | 0.64 |
| 92 | 1/28/1957 | 32 | 6.278 | 37.4 | 0.63 |
| 93 | 3/1/1978 | 12 | 6.266 | 37.8 | 0.62 |
| 94 | 1/6/1974 | 37 | 6.191 | 38.21 | 0.62 |
| 95 | 12/2/1961 | 3 | 6.174 | 38.62 | 0.61 |
| 96 | 3/11/2006 | 3 | 6.171 | 39.02 | 0.6 |
| 97 | 12/18/1984 | 22 | 6.069 | 39.43 | 0.6 |
| 98 | 12/24/1959 | 4 | 6.066 | 39.84 | 0.59 |
| 99 | 12/27/1984 | 3 | 6.047 | 40.24 | 0.59 |
| 100 | 1/7/2008 | 6 | 5.824 | 40.65 | 0.58 |

**Pre Condition POC 1B**

Statistics - Node POC Total Inflow

| Rank | Start Date | Event Duration (hours) | Event Peak (CFS) | Exceedance Frequency (percent) | Return Period (years) | (years) |
|---|---|---|---|---|---|---|
| 1 | 1/16/1978 | 10 | 9.61 | 0.06 | 58 | |
| 2 | 1/1/1982 | 7 | 9.526 | 0.12 | 29 | |
| 3 | 10/1/1983 | 2 | 7.394 | 0.19 | 19.33 | |
| 4 | 1/9/1978 | 22 | 6.341 | 0.25 | 14.5 | |
| 5 | 1/4/1995 | 17 | 5.861 | 0.31 | 11.6 | |
| 6 | 4/5/1967 | 1 | 5.216 | 0.37 | 9.67 | |
| 7 | 1/20/1982 | 34 | 5.214 | 0.43 | 8.29 | |
| 8 | 2/9/1963 | 37 | 4.373 | 0.49 | 7.25 | |
| 9 | 2/9/1978 | 11 | 4.311 | 0.56 | 6.44 | |
| 10 | 3/5/1995 | 27 | 4.302 | 0.62 | 5.8 | |
| 11 | 3/15/1986 | 30 | 4.244 | 0.68 | 5.27 | |
| 12 | 1/4/1978 | 14 | 4.045 | 0.74 | 4.83 | |
| 13 | 2/23/1998 | 19 | 3.941 | 0.8 | 4.46 | |
| 14 | 1/28/1980 | 28 | 3.914 | 0.87 | 4.14 | |
| 15 | 9/9/1976 | 30 | 3.893 | 0.93 | 3.87 | |
| 16 | 2/20/1980 | 17 | 3.74 | 0.99 | 3.63 | |
| 17 | 2/11/1959 | 6 | 3.482 | 1.05 | 3.41 | |
| 18 | 1/10/1980 | 16 | 3.465 | 1.11 | 3.22 | |
| 19 | 2/16/1980 | 17 | 3.46 | 1.17 | 3.05 | |
| 20 | 2/17/1980 | 13 | 3.46 | 1.24 | 2.9 | |
| 21 | 3/17/1982 | 32 | 3.452 | 1.3 | 2.76 | |
| 22 | 12/4/1966 | 50 | 3.363 | 1.36 | 2.64 | |
| 23 | 1/18/1955 | 11 | 3.124 | 1.42 | 2.52 | |
| 24 | 2/19/1980 | 24 | 3.084 | 1.48 | 2.42 | |
| 25 | 2/24/1969 | 28 | 2.953 | 1.55 | 2.32 | |
| 26 | 1/13/1993 | 17 | 2.953 | 1.61 | 2.23 | |
| 27 | 2/12/1992 | 22 | 2.947 | 1.67 | 2.15 | |
| 28 | 2/12/1978 | 9 | 2.929 | 1.73 | 2.07 | |
| 29 | 2/11/1973 | 14 | 2.703 | 1.79 | 2 | |
| 30 | 11/22/1965 | 25 | 2.602 | 1.85 | 1.93 | |
| 31 | 3/24/1983 | 6 | 2.598 | 1.92 | 1.87 | |
| 32 | 11/24/1983 | 4 | 2.569 | 1.98 | 1.81 | |
| 33 | 1/24/1969 | 45 | 2.479 | 2.04 | 1.76 | |
| 34 | 1/9/1998 | 20 | 2.456 | 2.1 | 1.71 | |
| 35 | 2/15/1992 | 8 | 2.383 | 2.16 | 1.66 | |
| 36 | 2/27/1983 | 15 | 2.372 | 2.22 | 1.61 | |
| 37 | 3/7/1968 | 18 | 2.362 | 2.29 | 1.57 | |
| 38 | 1/15/1993 | 51 | 2.264 | 2.35 | 1.53 | |
| 39 | 11/30/2007 | 20 | 2.258 | 2.41 | 1.49 | |
| 40 | 1/21/1964 | 31 | 2.218 | 2.47 | 1.45 | |
| 41 | 6/10/1990 | 8 | 2.202 | 2.53 | 1.41 | |
| 42 | 2/14/1980 | 6 | 2.177 | 2.6 | 1.38 | |
| 43 | 1/28/1983 | 5 | 2.117 | 2.66 | 1.35 | |
| 44 | 1/10/2005 | 21 | 2.072 | 2.72 | 1.32 | |
| 45 | 1/14/1978 | 17 | 2.03 | 2.78 | 1.29 | |
| 46 | 3/11/1995 | 11 | 1.986 | 2.84 | 1.26 | |
| 47 | 1/29/1981 | 4 | 1.927 | 2.9 | 1.23 | |
| 48 | 11/20/1963 | 7 | 1.912 | 2.97 | 1.21 | |
| 49 | 10/19/2004 | 42 | 1.906 | 3.03 | 1.18 | |
| 50 | 3/25/1991 | 54 | 1.843 | 3.09 | 1.16 | |
| 51 | 1/18/1973 | 9 | 1.834 | 3.15 | 1.14 | |
| 52 | 1/10/2001 | 21 | 1.77 | 3.21 | 1.12 | |
| 53 | 1/9/1980 | 18 | 1.758 | 3.28 | 1.09 | |
| 54 | 2/21/2004 | 11 | 1.757 | 3.34 | 1.07 | |
| 55 | 3/1/1970 | 23 | 1.746 | 3.4 | 1.05 | |
| 56 | 10/25/1951 | 6 | 1.744 | 3.46 | 1.04 | |
| 57 | 1/5/1977 | 37 | 1.695 | 3.52 | 1.02 | |

**10-year Q:** 5.326 cfs
**5-year Q:** 4.122 cfs
**2-year Q:** 2.703 cfs

**Lower Flow Threshold:** 10%

0.1xQ2 : 0.270 cfs

| | | | | | |
|---|---|---|---|---|---|
| 58 | 12/6/1997 | 21 | 1.671 | 3.58 | 1 |
| 59 | 11/29/1970 | 17 | 1.647 | 3.65 | 0.98 |
| 60 | 2/7/1998 | 9 | 1.63 | 3.71 | 0.97 |
| 61 | 1/12/1960 | 8 | 1.617 | 3.77 | 0.95 |
| 62 | 2/14/1986 | 20 | 1.612 | 3.83 | 0.94 |
| 63 | 1/8/2005 | 42 | 1.592 | 3.89 | 0.92 |
| 64 | 6/1/1996 | 1 | 1.586 | 3.96 | 0.91 |
| 65 | 2/18/2005 | 19 | 1.584 | 4.02 | 0.89 |
| 66 | 2/7/1994 | 25 | 1.584 | 4.08 | 0.88 |
| 67 | 11/15/1952 | 4 | 1.567 | 4.14 | 0.87 |
| 68 | 11/14/1972 | 4 | 1.554 | 4.2 | 0.85 |
| 69 | 11/30/1982 | 15 | 1.522 | 4.26 | 0.84 |
| 70 | 2/21/2005 | 9 | 1.499 | 4.33 | 0.83 |
| 71 | 3/15/1952 | 12 | 1.493 | 4.39 | 0.82 |
| 72 | 2/27/1991 | 46 | 1.466 | 4.45 | 0.81 |
| 73 | 1/10/1980 | 10 | 1.458 | 4.51 | 0.79 |
| 74 | 11/29/1985 | 18 | 1.457 | 4.57 | 0.78 |
| 75 | 1/13/1957 | 6 | 1.421 | 4.64 | 0.77 |
| 76 | 12/24/1971 | 30 | 1.42 | 4.7 | 0.76 |
| 77 | 3/1/1983 | 5 | 1.4 | 4.76 | 0.75 |
| 78 | 4/1/1982 | 10 | 1.318 | 4.82 | 0.74 |
| 79 | 1/6/1993 | 47 | 1.311 | 4.88 | 0.73 |
| 80 | 2/7/1993 | 38 | 1.306 | 4.94 | 0.73 |
| 81 | 1/27/2008 | 21 | 1.256 | 5.01 | 0.72 |
| 82 | 2/28/1957 | 19 | 1.251 | 5.07 | 0.71 |
| 83 | 3/10/1986 | 27 | 1.244 | 5.13 | 0.7 |
| 84 | 3/15/1958 | 22 | 1.163 | 5.19 | 0.69 |
| 85 | 1/15/1979 | 13 | 1.133 | 5.25 | 0.68 |
| 86 | 1/22/1967 | 13 | 1.127 | 5.32 | 0.67 |
| 87 | 12/24/2003 | 21 | 1.091 | 5.38 | 0.67 |
| 88 | 1/5/1979 | 26 | 1.052 | 5.44 | 0.66 |
| 89 | 5/8/1977 | 27 | 1.038 | 5.5 | 0.65 |
| 90 | 1/6/1987 | 15 | 1.017 | 5.56 | 0.64 |
| 91 | 2/1/1960 | 7 | 1.017 | 5.62 | 0.64 |
| 92 | 12/19/1984 | 3 | 0.933 | 5.69 | 0.63 |
| 93 | 2/27/1978 | 69 | 0.931 | 5.75 | 0.62 |
| 94 | 2/6/1969 | 11 | 0.927 | 5.81 | 0.62 |
| 95 | 1/25/1956 | 43 | 0.918 | 5.87 | 0.61 |
| 96 | 12/21/1970 | 13 | 0.906 | 5.93 | 0.6 |
| 97 | 4/2/1958 | 17 | 0.862 | 6 | 0.6 |
| 98 | 12/27/1984 | 5 | 0.844 | 6.06 | 0.59 |
| 99 | 2/3/1958 | 43 | 0.785 | 6.12 | 0.59 |
| 100 | 1/16/1973 | 7 | 0.773 | 6.18 | 0.58 |

**Pre Condition POC 3A**

Statistics - Node 3A Total Inflow

| Rank | Start Date | Event Duration (hours) | Event Peak (CFS) | Exceedance Frequency (percent) | Return Period (years) |
|---|---|---|---|---|---|
| 1 | 1/16/1978 | 4 | 3.888 | 0.45 | 58 |
| 2 | 1/1/1982 | 3 | 3.842 | 0.89 | 29 |
| 3 | 10/1/1983 | 9 | 2.955 | 1.34 | 19.33 |
| 4 | 1/10/1978 | 2 | 2.621 | 1.79 | 14.5 |
| 5 | 4/5/1967 | 1 | 2.517 | 2.23 | 11.6 |
| 6 | 1/4/1995 | 6 | 2.512 | 2.68 | 9.67 |
| 7 | 1/20/1982 | 6 | 2.369 | 3.13 | 8.29 |
| 8 | 3/5/1995 | 22 | 2.135 | 3.57 | 7.25 |
| 9 | 3/15/1986 | 10 | 2.124 | 4.02 | 6.44 |
| 10 | 2/10/1978 | 3 | 2.09 | 4.46 | 5.8 |
| 11 | 2/10/1963 | 1 | 2.069 | 4.91 | 5.27 |
| 12 | 2/11/1959 | 2 | 2.044 | 5.36 | 4.83 |
| 13 | 2/20/1980 | 3 | 1.813 | 5.8 | 4.46 |
| 14 | 1/9/1980 | 49 | 1.801 | 6.25 | 4.14 |
| 15 | 2/17/1980 | 36 | 1.793 | 6.7 | 3.87 |
| 16 | 2/22/1998 | 39 | 1.788 | 7.14 | 3.63 |
| 17 | 3/17/1982 | 15 | 1.752 | 7.59 | 3.41 |
| 18 | 2/16/1980 | 3 | 1.739 | 8.04 | 3.22 |
| 19 | 1/18/1955 | 3 | 1.703 | 8.48 | 3.05 |
| 20 | 2/22/2004 | 2 | 1.676 | 8.93 | 2.9 |
| 21 | 2/12/1978 | 1 | 1.657 | 9.38 | 2.76 |
| 22 | 1/14/1993 | 1 | 1.639 | 9.82 | 2.64 |
| 23 | 1/28/1980 | 9 | 1.632 | 10.27 | 2.52 |
| 24 | 2/12/1992 | 21 | 1.628 | 10.71 | 2.42 |
| 25 | 1/9/1998 | 2 | 1.619 | 11.16 | 2.32 |
| 26 | 1/4/1978 | 9 | 1.583 | 11.61 | 2.23 |
| 27 | 2/11/1973 | 1 | 1.536 | 12.05 | 2.15 |
| 28 | 12/5/1966 | 45 | 1.522 | 12.5 | 2.07 |
| 29 | 2/25/1969 | 6 | 1.504 | 12.95 | 2 |
| 30 | 2/15/1992 | 2 | 1.503 | 13.39 | 1.93 |
| 31 | 11/22/1965 | 19 | 1.484 | 13.84 | 1.87 |
| 32 | 11/15/1952 | 17 | 1.443 | 14.29 | 1.81 |
| 33 | 11/24/1983 | 1 | 1.394 | 14.73 | 1.76 |
| 34 | 2/8/1993 | 10 | 1.38 | 15.18 | 1.71 |
| 35 | 1/11/2001 | 5 | 1.377 | 15.63 | 1.66 |
| 36 | 2/6/1969 | 7 | 1.375 | 16.07 | 1.61 |
| 37 | 11/30/2007 | 6 | 1.347 | 16.52 | 1.57 |
| 38 | 3/24/1983 | 1 | 1.346 | 16.96 | 1.53 |
| 39 | 3/11/1995 | 3 | 1.331 | 17.41 | 1.49 |
| 40 | 1/29/1981 | 1 | 1.289 | 17.86 | 1.45 |
| 41 | 9/10/1976 | 1 | 1.288 | 18.3 | 1.41 |
| 42 | 1/15/1993 | 34 | 1.283 | 18.75 | 1.38 |
| 43 | 2/14/1986 | 7 | 1.28 | 19.2 | 1.35 |
| 44 | 6/10/1990 | 1 | 1.273 | 19.64 | 1.32 |
| 45 | 2/14/1980 | 24 | 1.258 | 20.09 | 1.29 |
| 46 | 1/22/1964 | 3 | 1.251 | 20.54 | 1.26 |
| 47 | 12/18/1967 | 2 | 1.241 | 20.98 | 1.23 |
| 48 | 10/19/2004 | 22 | 1.237 | 21.43 | 1.21 |
| 49 | 1/25/1969 | 9 | 1.179 | 21.88 | 1.18 |
| 50 | 1/11/2005 | 6 | 1.161 | 22.32 | 1.16 |
| 51 | 2/27/1983 | 14 | 1.151 | 22.77 | 1.14 |
| 52 | 2/21/2005 | 49 | 1.149 | 23.21 | 1.12 |
| 53 | 1/9/2005 | 18 | 1.143 | 23.66 | 1.09 |
| 54 | 2/7/1994 | 1 | 1.141 | 24.11 | 1.07 |
| 55 | 1/15/1979 | 2 | 1.137 | 24.55 | 1.05 |
| 56 | 3/15/1952 | 7 | 1.118 | 25 | 1.04 |

**10-year Q:** 2.513 cfs
**5-year Q:** 2.054 cfs
**2-year Q:** 1.504 cfs

**Lower Flow Threshold:** 10%

0.1xQ2 : 0.150 cfs

| | | | | | |
|---|---|---|---|---|---|
| 57 | 1/14/1978 | 6 | 1.113 | 25.45 | 1.02 |
| 58 | 10/18/2004 | 1 | 1.108 | 25.89 | 1 |
| 59 | 4/1/1982 | 2 | 1.095 | 26.34 | 0.98 |
| 60 | 12/6/1997 | 7 | 1.09 | 26.79 | 0.97 |
| 61 | 11/14/1972 | 1 | 1.09 | 27.23 | 0.95 |
| 62 | 6/1/1996 | 1 | 1.047 | 27.68 | 0.94 |
| 63 | 2/19/2005 | 1 | 1.044 | 28.13 | 0.92 |
| 64 | 1/29/1983 | 3 | 1.037 | 28.57 | 0.91 |
| 65 | 12/2/1961 | 8 | 1.033 | 29.02 | 0.89 |
| 66 | 3/26/1991 | 7 | 1.033 | 29.46 | 0.88 |
| 67 | 1/13/1957 | 4 | 1.019 | 29.91 | 0.87 |
| 68 | 1/18/1973 | 2 | 1.012 | 30.36 | 0.85 |
| 69 | 1/27/2008 | 32 | 1.003 | 30.8 | 0.84 |
| 70 | 3/1/1983 | 29 | 0.992 | 31.25 | 0.83 |
| 71 | 3/10/1986 | 1 | 0.974 | 31.7 | 0.82 |
| 72 | 3/11/2006 | 2 | 0.963 | 32.14 | 0.81 |
| 73 | 1/6/1977 | 4 | 0.959 | 32.59 | 0.79 |
| 74 | 1/12/1960 | 4 | 0.947 | 33.04 | 0.78 |
| 75 | 3/15/1958 | 15 | 0.94 | 33.48 | 0.77 |
| 76 | 3/1/1970 | 19 | 0.939 | 33.93 | 0.76 |
| 77 | 1/6/1993 | 20 | 0.939 | 34.38 | 0.75 |
| 78 | 3/8/1968 | 2 | 0.938 | 34.82 | 0.74 |
| 79 | 11/21/1963 | 2 | 0.907 | 35.27 | 0.73 |
| 80 | 1/6/1987 | 2 | 0.88 | 35.71 | 0.73 |
| 81 | 11/29/1985 | 6 | 0.872 | 36.16 | 0.72 |
| 82 | 1/6/1979 | 6 | 0.864 | 36.61 | 0.71 |
| 83 | 12/24/1971 | 3 | 0.859 | 37.05 | 0.7 |
| 84 | 12/18/1984 | 21 | 0.849 | 37.5 | 0.69 |
| 85 | 12/20/1952 | 4 | 0.842 | 37.95 | 0.68 |
| 86 | 2/8/1998 | 5 | 0.833 | 38.39 | 0.67 |
| 87 | 3/1/1991 | 18 | 0.831 | 38.84 | 0.67 |
| 88 | 1/22/1967 | 7 | 0.811 | 39.29 | 0.66 |
| 89 | 12/29/1965 | 1 | 0.793 | 39.73 | 0.65 |
| 90 | 11/29/1970 | 5 | 0.792 | 40.18 | 0.64 |
| 91 | 12/27/1984 | 3 | 0.787 | 40.63 | 0.64 |
| 92 | 12/21/1970 | 5 | 0.785 | 41.07 | 0.63 |
| 93 | 12/25/2003 | 2 | 0.779 | 41.52 | 0.62 |
| 94 | 1/20/1962 | 5 | 0.777 | 41.96 | 0.62 |
| 95 | 4/11/1967 | 2 | 0.752 | 42.41 | 0.61 |
| 96 | 1/16/1973 | 1 | 0.733 | 42.86 | 0.6 |
| 97 | 1/21/1969 | 1 | 0.714 | 43.3 | 0.6 |
| 98 | 1/7/2008 | 5 | 0.712 | 43.75 | 0.59 |
| 99 | 2/26/1983 | 1 | 0.708 | 44.2 | 0.59 |
| 100 | 3/23/1964 | 2 | 0.675 | 44.64 | 0.58 |
| 101 | 12/24/1988 | 4 | 0.66 | 45.09 | 0.57 |
| 102 | 4/3/1958 | 3 | 0.66 | 45.54 | 0.57 |
| 103 | 11/19/1967 | 13 | 0.653 | 45.98 | 0.56 |
| 104 | 3/5/2000 | 1 | 0.652 | 46.43 | 0.56 |
| 105 | 12/2/1952 | 3 | 0.637 | 46.88 | 0.55 |
| 106 | 12/28/2004 | 24 | 0.628 | 47.32 | 0.55 |
| 107 | 12/17/1957 | 1 | 0.619 | 47.77 | 0.54 |
| 108 | 1/26/1956 | 8 | 0.607 | 48.21 | 0.54 |
| 109 | 2/28/1957 | 1 | 0.601 | 48.66 | 0.53 |
| 110 | 12/7/1992 | 1 | 0.59 | 49.11 | 0.53 |
| 111 | 10/25/1951 | 1 | 0.588 | 49.55 | 0.52 |
| 112 | 1/6/1974 | 34 | 0.564 | 50 | 0.52 |
| 113 | 3/12/1986 | 1 | 0.549 | 50.45 | 0.51 |
| 114 | 12/24/1959 | 3 | 0.545 | 50.89 | 0.51 |
| 115 | 1/16/1952 | 8 | 0.544 | 51.34 | 0.5 |
| 116 | 1/26/1997 | 4 | 0.54 | 51.79 | 0.5 |
| 117 | 1/10/1995 | 7 | 0.539 | 52.23 | 0.5 |
| 118 | 12/11/1984 | 2 | 0.538 | 52.68 | 0.49 |
| 119 | 1/7/2005 | 3 | 0.536 | 53.13 | 0.49 |
| 120 | 11/21/1996 | 24 | 0.536 | 53.57 | 0.48 |
| 121 | 2/8/1976 | 2 | 0.535 | 54.02 | 0.48 |

| | | | | | |
|---|---|---|---|---|---|
| 122 | 2/2/1960 | 1 | 0.535 | 54.46 | 0.48 |
| 125 | 4/26/1994 | 1 | 0.526 | 55.8 | 0.46 |
| 125 | 4/7/1958 | 13 | 0.526 | 55.8 | 0.46 |
| 125 | 9/18/1963 | 1 | 0.526 | 55.8 | 0.46 |
| 126 | 3/20/1991 | 2 | 0.525 | 56.25 | 0.46 |
| 127 | 5/8/1977 | 2 | 0.525 | 56.7 | 0.46 |
| 128 | 3/7/1994 | 1 | 0.522 | 57.14 | 0.45 |
| 129 | 3/1/1978 | 12 | 0.507 | 57.59 | 0.45 |
| 130 | 2/6/1978 | 2 | 0.496 | 58.04 | 0.45 |
| 131 | 1/26/1958 | 1 | 0.495 | 58.48 | 0.44 |
| 132 | 2/4/1958 | 3 | 0.493 | 58.93 | 0.44 |
| 133 | 1/24/1967 | 7 | 0.486 | 59.38 | 0.44 |
| 134 | 12/6/1998 | 1 | 0.48 | 59.82 | 0.43 |
| 135 | 1/25/1954 | 6 | 0.474 | 60.27 | 0.43 |
| 136 | 3/23/1992 | 1 | 0.469 | 60.71 | 0.43 |
| 137 | 1/28/1957 | 30 | 0.455 | 61.16 | 0.42 |
| 138 | 2/26/2004 | 5 | 0.425 | 61.61 | 0.42 |
| 139 | 10/27/2004 | 4 | 0.423 | 62.05 | 0.42 |
| 140 | 11/13/1978 | 1 | 0.418 | 62.5 | 0.41 |
| 141 | 12/29/1991 | 9 | 0.412 | 62.95 | 0.41 |
| 142 | 1/18/1993 | 3 | 0.405 | 63.39 | 0.41 |
| 143 | 3/30/1954 | 1 | 0.403 | 63.84 | 0.41 |
| 144 | 3/29/1998 | 2 | 0.397 | 64.29 | 0.4 |
| 145 | 1/18/1954 | 19 | 0.395 | 64.73 | 0.4 |
| 146 | 11/30/1982 | 8 | 0.388 | 65.18 | 0.4 |
| 147 | 1/14/1960 | 1 | 0.383 | 65.63 | 0.39 |
| 148 | 3/8/1974 | 1 | 0.38 | 66.07 | 0.39 |
| 149 | 2/14/1998 | 2 | 0.367 | 66.52 | 0.39 |
| 150 | 11/16/1972 | 1 | 0.356 | 66.96 | 0.39 |
| 151 | 2/4/1994 | 1 | 0.345 | 67.41 | 0.38 |
| 152 | 1/3/1977 | 1 | 0.342 | 67.86 | 0.38 |
| 153 | 2/13/1973 | 1 | 0.341 | 68.3 | 0.38 |
| 154 | 11/25/2001 | 1 | 0.337 | 68.75 | 0.38 |
| 155 | 1/4/1974 | 1 | 0.334 | 69.2 | 0.37 |
| 156 | 3/11/1975 | 1 | 0.324 | 69.64 | 0.37 |
| 157 | 2/21/2000 | 1 | 0.313 | 70.09 | 0.37 |
| 158 | 12/3/1966 | 2 | 0.31 | 70.54 | 0.37 |
| 159 | 2/17/1990 | 1 | 0.3 | 70.98 | 0.36 |
| 160 | 3/21/2006 | 1 | 0.296 | 71.43 | 0.36 |
| 161 | 4/10/1952 | 1 | 0.29 | 71.88 | 0.36 |
| 162 | 3/3/1992 | 1 | 0.289 | 72.32 | 0.36 |
| 163 | 12/30/1951 | 11 | 0.287 | 72.77 | 0.36 |
| 164 | 1/5/1992 | 1 | 0.271 | 73.21 | 0.35 |
| 165 | 3/4/1978 | 1 | 0.257 | 73.66 | 0.35 |
| 166 | 4/21/1988 | 1 | 0.256 | 74.11 | 0.35 |
| 167 | 1/7/1995 | 3 | 0.255 | 74.55 | 0.35 |
| 168 | 9/17/1963 | 1 | 0.253 | 75 | 0.35 |
| 169 | 1/26/1999 | 1 | 0.249 | 75.45 | 0.34 |
| 170 | 2/23/1993 | 1 | 0.243 | 75.89 | 0.34 |
| 171 | 2/9/1985 | 3 | 0.234 | 76.34 | 0.34 |
| 172 | 4/8/1965 | 2 | 0.227 | 76.79 | 0.34 |
| 173 | 2/7/1978 | 2 | 0.222 | 77.23 | 0.34 |
| 174 | 2/13/1954 | 2 | 0.222 | 77.68 | 0.33 |
| 175 | 12/31/2004 | 2 | 0.219 | 78.13 | 0.33 |
| 176 | 12/13/1995 | 1 | 0.218 | 78.57 | 0.33 |
| 177 | 1/3/2005 | 2 | 0.218 | 79.02 | 0.33 |
| 178 | 12/27/1971 | 1 | 0.214 | 79.46 | 0.33 |
| 179 | 11/28/1981 | 3 | 0.213 | 79.91 | 0.32 |
| 180 | 12/18/1977 | 1 | 0.209 | 80.36 | 0.32 |
| 181 | 3/7/1952 | 4 | 0.208 | 80.8 | 0.32 |
| 182 | 2/27/1991 | 1 | 0.192 | 81.25 | 0.32 |
| 183 | 11/4/1987 | 3 | 0.178 | 81.7 | 0.32 |
| 184 | 12/21/1988 | 4 | 0.171 | 82.14 | 0.32 |
| 185 | 1/10/1955 | 1 | 0.17 | 82.59 | 0.31 |
| 186 | 4/8/1975 | 1 | 0.167 | 83.04 | 0.31 |

| | | | | | |
|---|---|---|---|---|---|
| 187 | 1/26/1995 | 1 | 0.161 | 83.48 | 0.31 |
| 188 | 2/8/1978 | 2 | 0.15 | 83.93 | 0.31 |
| 189 | 2/19/1962 | 1 | 0.144 | 84.38 | 0.31 |
| 190 | 12/4/1974 | 1 | 0.143 | 84.82 | 0.31 |
| 191 | 12/27/1964 | 1 | 0.139 | 85.27 | 0.3 |
| 192 | 2/13/1989 | 1 | 0.13 | 85.71 | 0.3 |
| 193 | 3/28/1979 | 1 | 0.129 | 86.16 | 0.3 |
| 194 | 2/23/1969 | 1 | 0.129 | 86.61 | 0.3 |
| 195 | 3/6/1980 | 1 | 0.126 | 87.05 | 0.3 |
| 196 | 2/7/1973 | 2 | 0.123 | 87.5 | 0.3 |
| 197 | 1/2/2006 | 1 | 0.116 | 87.95 | 0.29 |
| 198 | 3/13/1967 | 2 | 0.112 | 88.39 | 0.29 |
| 199 | 2/25/1987 | 1 | 0.109 | 88.84 | 0.29 |
| 200 | 3/21/1983 | 1 | 0.105 | 89.29 | 0.29 |
| 201 | 12/19/1970 | 1 | 0.095 | 89.73 | 0.29 |
| 202 | 2/19/1993 | 1 | 0.093 | 90.18 | 0.29 |
| 203 | 3/29/2006 | 1 | 0.091 | 90.63 | 0.29 |
| 204 | 1/13/1952 | 2 | 0.085 | 91.07 | 0.28 |
| 205 | 2/3/1998 | 1 | 0.084 | 91.52 | 0.28 |
| 206 | 11/18/1986 | 1 | 0.077 | 91.96 | 0.28 |
| 207 | 11/16/1965 | 1 | 0.076 | 92.41 | 0.28 |
| 208 | 3/13/1996 | 1 | 0.071 | 92.86 | 0.28 |
| 209 | 3/2/1953 | 1 | 0.065 | 93.3 | 0.28 |
| 210 | 12/22/1982 | 1 | 0.062 | 93.75 | 0.28 |
| 211 | 2/12/2000 | 1 | 0.061 | 94.2 | 0.27 |
| 212 | 1/18/1952 | 2 | 0.059 | 94.64 | 0.27 |
| 213 | 4/20/1983 | 1 | 0.059 | 95.09 | 0.27 |
| 214 | 4/4/2006 | 1 | 0.051 | 95.54 | 0.27 |
| 215 | 11/21/1967 | 1 | 0.048 | 95.98 | 0.27 |
| 216 | 10/18/2005 | 2 | 0.047 | 96.43 | 0.27 |
| 217 | 3/28/1993 | 1 | 0.043 | 96.88 | 0.27 |
| 218 | 1/27/1994 | 1 | 0.041 | 97.32 | 0.27 |
| 219 | 4/1/1958 | 3 | 0.029 | 97.77 | 0.26 |
| 220 | 5/13/1998 | 1 | 0.024 | 98.21 | 0.26 |
| 221 | 12/10/1965 | 1 | 0.022 | 98.66 | 0.26 |
| 222 | 1/27/1983 | 1 | 0.011 | 99.11 | 0.26 |
| 223 | 11/20/1961 | 1 | 0.011 | 99.55 | 0.26 |
| 224 | 3/20/1992 | 1 | 0.065 | 96.97 | 0.26 |
| 225 | 10/18/2005 | 3 | 0.065 | 97.4 | 0.26 |
| 226 | 4/13/1956 | 1 | 0.023 | 97.84 | 0.26 |
| 227 | 3/18/1973 | 1 | 0.019 | 98.27 | 0.26 |
| 228 | 2/6/1976 | 1 | 0.014 | 98.7 | 0.25 |
| 229 | 10/14/1957 | 1 | 0.01 | 99.13 | 0.25 |
| 230 | 11/20/1983 | 1 | 0.007 | 99.57 | 0.25 |

**Pre Condition POC 3B**

| Statistics Rank | Event Duration Start | Node Event Peak Date | 3B Exceedance Frequency (hours) | Total Return Period (CFS) | Inflow (percent) | (years) |
|---|---|---|---|---|---|---|
| 1 | 1/16/1978 | 9 | 1.688 | 0.16 | 58 | |
| 2 | 1/1/1982 | 26 | 1.666 | 0.32 | 29 | |
| 3 | 10/1/1983 | 11 | 1.412 | 0.47 | 19.33 | |
| 4 | 1/9/1978 | 34 | 1.199 | 0.63 | 14.5 | |
| 5 | 4/4/1967 | 25 | 1.189 | 0.79 | 11.6 | |
| 6 | 1/20/1982 | 31 | 1.184 | 0.95 | 9.67 | |
| 7 | 1/3/1995 | 40 | 1.096 | 1.11 | 8.29 | |
| 8 | 2/9/1963 | 38 | 1.027 | 1.26 | 7.25 | |
| 9 | 2/7/1978 | 79 | 0.955 | 1.42 | 6.44 | |
| 10 | 3/15/1986 | 29 | 0.951 | 1.58 | 5.8 | |
| 11 | 3/5/1995 | 26 | 0.941 | 1.74 | 5.27 | |
| 12 | 6/1/1996 | 1 | 0.932 | 1.9 | 4.83 | |
| 13 | 6/9/1990 | 19 | 0.912 | 2.05 | 4.46 | |
| 14 | 2/11/1959 | 26 | 0.909 | 2.21 | 4.14 | |
| 15 | 2/22/2004 | 26 | 0.898 | 2.37 | 3.87 | |
| 16 | 2/22/1998 | 50 | 0.836 | 2.53 | 3.63 | |
| 17 | 1/8/1980 | 143 | 0.834 | 2.69 | 3.41 | |
| 18 | 2/12/1978 | 19 | 0.833 | 2.84 | 3.22 | |
| 19 | 2/13/1980 | 187 | 0.833 | 3 | 3.05 | |
| 20 | 2/11/1973 | 45 | 0.831 | 3.16 | 2.9 | |
| 21 | 1/4/1978 | 51 | 0.83 | 3.32 | 2.76 | |
| 22 | 1/28/1980 | 40 | 0.828 | 3.48 | 2.64 | |
| 23 | 1/9/1998 | 20 | 0.828 | 3.63 | 2.52 | |
| 24 | 9/10/1976 | 25 | 0.821 | 3.79 | 2.42 | |
| 25 | 11/24/1983 | 3 | 0.818 | 3.95 | 2.32 | |
| 26 | 3/17/1982 | 23 | 0.815 | 4.11 | 2.23 | |
| 27 | 12/6/1997 | 38 | 0.797 | 4.27 | 2.15 | |
| 28 | 1/18/1955 | 7 | 0.784 | 4.42 | 2.07 | |
| 29 | 1/12/1993 | 36 | 0.762 | 4.58 | 2 | |
| 30 | 2/15/1992 | 8 | 0.762 | 4.74 | 1.93 | |
| 31 | 9/17/1963 | 43 | 0.758 | 4.9 | 1.87 | |
| 32 | 2/12/1992 | 22 | 0.756 | 5.06 | 1.81 | |
| 33 | 11/30/2007 | 18 | 0.734 | 5.21 | 1.76 | |
| 34 | 2/23/1969 | 51 | 0.714 | 5.37 | 1.71 | |
| 35 | 3/24/1983 | 17 | 0.711 | 5.53 | 1.66 | |
| 36 | 11/22/1965 | 25 | 0.709 | 5.69 | 1.61 | |
| 37 | 12/5/1966 | 49 | 0.707 | 5.85 | 1.57 | |
| 38 | 12/18/1967 | 25 | 0.707 | 6 | 1.53 | |
| 39 | 4/1/1982 | 10 | 0.705 | 6.16 | 1.49 | |
| 40 | 1/15/1979 | 9 | 0.7 | 6.32 | 1.45 | |
| 41 | 3/11/1995 | 24 | 0.699 | 6.48 | 1.41 | |
| 42 | 2/6/1969 | 11 | 0.698 | 6.64 | 1.38 | |
| 43 | 12/29/1965 | 4 | 0.696 | 6.79 | 1.35 | |
| 44 | 11/14/1972 | 3 | 0.695 | 6.95 | 1.32 | |
| 45 | 1/29/1981 | 4 | 0.692 | 7.11 | 1.29 | |
| 46 | 1/22/1967 | 12 | 0.649 | 7.27 | 1.26 | |
| 47 | 1/11/2001 | 32 | 0.645 | 7.42 | 1.23 | |
| 48 | 3/16/1963 | 5 | 0.644 | 7.58 | 1.21 | |
| 49 | 2/8/1993 | 15 | 0.644 | 7.74 | 1.18 | |
| 50 | 11/14/1952 | 41 | 0.639 | 7.9 | 1.16 | |
| 51 | 12/28/2004 | 25 | 0.617 | 8.06 | 1.14 | |
| 52 | 1/15/1993 | 79 | 0.617 | 8.21 | 1.12 | |
| 53 | 2/14/1986 | 14 | 0.607 | 8.37 | 1.09 | |
| 54 | 1/21/1964 | 27 | 0.602 | 8.53 | 1.07 | |
| 55 | 12/4/1987 | 2 | 0.599 | 8.69 | 1.05 | |
| 56 | 10/19/2004 | 26 | 0.593 | 8.85 | 1.04 | |
| 57 | 1/24/1969 | 62 | 0.592 | 9 | 1.02 | |
| 58 | 3/7/1968 | 17 | 0.591 | 9.16 | 1 | |

**10-year Q:** 1.185 cfs
**5-year Q:** 0.935 cfs
**2-year Q:** 0.762 cfs

**Lower Flow Threshold:** 10%

0.1xQ2 : 0.076 cfs

| | | | | | |
|---|---|---|---|---|---|
| 59 | 1/29/1983 | 5 | 0.589 | 9.32 | 0.98 |
| 60 | 3/18/1973 | 15 | 0.587 | 9.48 | 0.97 |
| 61 | 1/14/1978 | 17 | 0.586 | 9.64 | 0.95 |
| 62 | 4/11/1967 | 24 | 0.584 | 9.79 | 0.94 |
| 63 | 1/18/1973 | 8 | 0.584 | 9.95 | 0.92 |
| 64 | 2/26/1983 | 124 | 0.584 | 10.11 | 0.91 |
| 65 | 1/5/1977 | 35 | 0.583 | 10.27 | 0.89 |
| 66 | 2/28/1970 | 41 | 0.576 | 10.43 | 0.88 |
| 67 | 1/16/1973 | 5 | 0.574 | 10.58 | 0.87 |
| 68 | 11/29/1982 | 26 | 0.574 | 10.74 | 0.85 |
| 69 | 1/5/1979 | 26 | 0.572 | 10.9 | 0.84 |
| 70 | 2/3/1998 | 27 | 0.57 | 11.06 | 0.83 |
| 71 | 1/7/2005 | 93 | 0.568 | 11.22 | 0.82 |
| 72 | 11/19/1967 | 24 | 0.566 | 11.37 | 0.81 |
| 73 | 2/20/2005 | 70 | 0.565 | 11.53 | 0.79 |
| 74 | 2/7/1994 | 22 | 0.561 | 11.69 | 0.78 |
| 75 | 2/18/2005 | 34 | 0.559 | 11.85 | 0.77 |
| 76 | 3/15/1952 | 23 | 0.553 | 12.01 | 0.76 |
| 77 | 12/2/1961 | 29 | 0.551 | 12.16 | 0.75 |
| 78 | 11/20/1963 | 23 | 0.541 | 12.32 | 0.74 |
| 79 | 10/25/1951 | 5 | 0.539 | 12.48 | 0.73 |
| 80 | 11/18/1986 | 6 | 0.534 | 12.64 | 0.73 |
| 81 | 1/13/1957 | 7 | 0.533 | 12.8 | 0.72 |
| 82 | 1/28/1981 | 2 | 0.522 | 12.95 | 0.71 |
| 83 | 2/2/2004 | 3 | 0.519 | 13.11 | 0.7 |
| 84 | 2/28/1957 | 19 | 0.517 | 13.27 | 0.69 |
| 85 | 3/25/1991 | 53 | 0.517 | 13.43 | 0.68 |
| 86 | 1/27/2008 | 33 | 0.514 | 13.59 | 0.67 |
| 87 | 2/1/1960 | 6 | 0.513 | 13.74 | 0.67 |
| 88 | 10/18/2004 | 2 | 0.51 | 13.9 | 0.66 |
| 89 | 1/6/1993 | 46 | 0.509 | 14.06 | 0.65 |
| 90 | 3/10/1986 | 20 | 0.506 | 14.22 | 0.64 |
| 91 | 3/11/2006 | 6 | 0.505 | 14.38 | 0.64 |
| 92 | 11/13/1984 | 1 | 0.503 | 14.53 | 0.63 |
| 93 | 1/20/1962 | 10 | 0.502 | 14.69 | 0.62 |
| 94 | 2/27/1991 | 52 | 0.499 | 14.85 | 0.62 |
| 95 | 3/15/1958 | 18 | 0.497 | 15.01 | 0.61 |
| 96 | 3/12/1996 | 18 | 0.494 | 15.17 | 0.6 |
| 97 | 4/28/2005 | 6 | 0.492 | 15.32 | 0.6 |
| 98 | 2/7/1998 | 28 | 0.47 | 15.48 | 0.59 |
| 99 | 1/12/1960 | 7 | 0.467 | 15.64 | 0.59 |
| 100 | 11/28/1970 | 33 | 0.467 | 15.8 | 0.58 |
| 101 | 1/19/1969 | 60 | 0.466 | 15.96 | 0.57 |
| 102 | 12/24/1971 | 41 | 0.466 | 16.11 | 0.57 |
| 103 | 11/20/1961 | 2 | 0.464 | 16.27 | 0.56 |
| 104 | 12/18/1984 | 39 | 0.462 | 16.43 | 0.56 |
| 105 | 12/21/1970 | 24 | 0.461 | 16.59 | 0.55 |
| 106 | 3/21/1983 | 8 | 0.46 | 16.75 | 0.55 |
| 107 | 2/27/1978 | 64 | 0.459 | 16.9 | 0.54 |
| 108 | 11/29/1985 | 17 | 0.458 | 17.06 | 0.54 |
| 109 | 1/4/1974 | 18 | 0.457 | 17.22 | 0.53 |
| 110 | 11/13/1978 | 3 | 0.45 | 17.38 | 0.53 |
| 111 | 3/20/1992 | 16 | 0.448 | 17.54 | 0.52 |
| 112 | 12/4/1972 | 6 | 0.447 | 17.69 | 0.52 |
| 113 | 1/6/1987 | 13 | 0.446 | 17.85 | 0.51 |
| 114 | 3/25/1977 | 6 | 0.445 | 18.01 | 0.51 |
| 115 | 1/30/2007 | 2 | 0.445 | 18.17 | 0.5 |
| 116 | 12/22/1982 | 6 | 0.443 | 18.33 | 0.5 |
| 117 | 10/27/2004 | 33 | 0.441 | 18.48 | 0.5 |
| 118 | 2/7/1973 | 3 | 0.441 | 18.64 | 0.49 |
| 119 | 4/15/1978 | 4 | 0.437 | 18.8 | 0.49 |
| 120 | 5/7/1977 | 36 | 0.435 | 18.96 | 0.48 |
| 121 | 10/29/2000 | 3 | 0.435 | 19.12 | 0.48 |
| 122 | 11/7/1966 | 7 | 0.434 | 19.27 | 0.48 |
| 123 | 1/26/1995 | 2 | 0.431 | 19.43 | 0.47 |
| 124 | 12/29/1991 | 11 | 0.429 | 19.59 | 0.47 |

| | | | | | |
|---|---|---|---|---|---|
| 125 | 12/27/1964 | 25 | 0.428 | 19.75 | 0.46 |
| 126 | 12/4/1974 | 9 | 0.425 | 19.91 | 0.46 |
| 127 | 1/25/1956 | 41 | 0.423 | 20.06 | 0.46 |
| 128 | 12/20/1952 | 11 | 0.418 | 20.22 | 0.45 |
| 129 | 1/10/1995 | 50 | 0.417 | 20.38 | 0.45 |
| 130 | 12/7/1992 | 9 | 0.415 | 20.54 | 0.45 |
| 131 | 12/27/1984 | 17 | 0.414 | 20.7 | 0.44 |
| 132 | 12/25/2003 | 11 | 0.413 | 20.85 | 0.44 |
| 133 | 4/27/1953 | 3 | 0.409 | 21.01 | 0.44 |
| 134 | 4/10/1952 | 8 | 0.409 | 21.17 | 0.43 |
| 135 | 3/4/2000 | 31 | 0.406 | 21.33 | 0.43 |
| 136 | 1/5/2008 | 52 | 0.398 | 21.48 | 0.43 |
| 137 | 2/19/1958 | 8 | 0.39 | 21.64 | 0.42 |
| 138 | 2/18/1993 | 7 | 0.39 | 21.8 | 0.42 |
| 139 | 1/17/1988 | 12 | 0.379 | 21.96 | 0.42 |
| 140 | 3/22/1964 | 29 | 0.379 | 22.12 | 0.41 |
| 141 | 2/13/1954 | 22 | 0.378 | 22.27 | 0.41 |
| 142 | 3/2/1992 | 30 | 0.377 | 22.43 | 0.41 |
| 143 | 12/17/1957 | 2 | 0.375 | 22.59 | 0.41 |
| 144 | 12/10/2006 | 1 | 0.373 | 22.75 | 0.4 |
| 145 | 11/21/1996 | 31 | 0.372 | 22.91 | 0.4 |
| 146 | 12/24/1988 | 7 | 0.37 | 23.06 | 0.4 |
| 147 | 2/3/1958 | 42 | 0.368 | 23.22 | 0.39 |
| 148 | 1/7/1995 | 18 | 0.367 | 23.38 | 0.39 |
| 149 | 4/1/2004 | 2 | 0.366 | 23.54 | 0.39 |
| 150 | 4/3/1958 | 34 | 0.365 | 23.7 | 0.39 |
| 151 | 3/28/1961 | 9 | 0.365 | 23.85 | 0.38 |
| 152 | 3/12/1986 | 4 | 0.364 | 24.01 | 0.38 |
| 153 | 4/7/1958 | 15 | 0.361 | 24.17 | 0.38 |
| 154 | 1/25/1958 | 14 | 0.358 | 24.33 | 0.38 |
| 155 | 12/2/1952 | 4 | 0.356 | 24.49 | 0.37 |
| 156 | 1/16/1952 | 10 | 0.355 | 24.64 | 0.37 |
| 157 | 12/9/1996 | 51 | 0.354 | 24.8 | 0.37 |
| 158 | 2/17/1990 | 12 | 0.353 | 24.96 | 0.37 |
| 159 | 4/26/1994 | 3 | 0.353 | 25.12 | 0.36 |
| 160 | 12/11/1984 | 3 | 0.353 | 25.28 | 0.36 |
| 161 | 3/27/1958 | 5 | 0.352 | 25.43 | 0.36 |
| 162 | 1/12/1997 | 41 | 0.348 | 25.59 | 0.36 |
| 163 | 1/6/1974 | 41 | 0.347 | 25.75 | 0.36 |
| 164 | 1/31/1979 | 68 | 0.344 | 25.91 | 0.35 |
| 165 | 2/6/1998 | 9 | 0.342 | 26.07 | 0.35 |
| 166 | 1/24/1954 | 25 | 0.342 | 26.22 | 0.35 |
| 167 | 11/16/1972 | 33 | 0.342 | 26.38 | 0.35 |
| 168 | 4/20/1983 | 24 | 0.341 | 26.54 | 0.35 |
| 169 | 2/5/1978 | 27 | 0.341 | 26.7 | 0.34 |
| 170 | 1/2/1977 | 8 | 0.34 | 26.86 | 0.34 |
| 171 | 3/7/1974 | 20 | 0.34 | 27.01 | 0.34 |
| 172 | 12/27/1971 | 27 | 0.339 | 27.17 | 0.34 |
| 173 | 3/6/1958 | 10 | 0.339 | 27.33 | 0.34 |
| 174 | 12/19/1970 | 13 | 0.339 | 27.49 | 0.33 |
| 175 | 3/27/1979 | 31 | 0.338 | 27.65 | 0.33 |
| 176 | 2/8/1976 | 42 | 0.337 | 27.8 | 0.33 |
| 177 | 3/13/1967 | 13 | 0.337 | 27.96 | 0.33 |
| 178 | 12/24/1983 | 20 | 0.336 | 28.12 | 0.33 |
| 179 | 6/5/1993 | 4 | 0.335 | 28.28 | 0.32 |
| 180 | 11/20/1983 | 11 | 0.335 | 28.44 | 0.32 |
| 181 | 12/9/1965 | 34 | 0.335 | 28.59 | 0.32 |
| 182 | 2/14/1998 | 8 | 0.334 | 28.75 | 0.32 |
| 183 | 11/21/1967 | 3 | 0.334 | 28.91 | 0.32 |
| 184 | 3/19/1991 | 55 | 0.334 | 29.07 | 0.32 |
| 185 | 1/27/1983 | 11 | 0.332 | 29.23 | 0.31 |
| 186 | 2/3/1975 | 51 | 0.332 | 29.38 | 0.31 |
| 187 | 11/14/1965 | 51 | 0.331 | 29.54 | 0.31 |
| 188 | 7/13/1954 | 2 | 0.33 | 29.7 | 0.31 |
| 189 | 2/10/1982 | 18 | 0.33 | 29.86 | 0.31 |
| 190 | 1/26/2005 | 10 | 0.33 | 30.02 | 0.31 |

| | | | | | |
|---|---|---|---|---|---|
| 191 | 2/28/2007 | 2 | 0.33 | 30.17 | 0.3 |
| 192 | 3/4/1978 | 31 | 0.329 | 30.33 | 0.3 |
| 193 | 12/22/1971 | 17 | 0.329 | 30.49 | 0.3 |
| 194 | 1/17/1990 | 11 | 0.329 | 30.65 | 0.3 |
| 195 | 11/22/1973 | 3 | 0.329 | 30.81 | 0.3 |
| 196 | 5/4/1998 | 6 | 0.328 | 30.96 | 0.3 |
| 197 | 1/24/1967 | 8 | 0.327 | 31.12 | 0.29 |
| 198 | 2/21/1979 | 9 | 0.326 | 31.28 | 0.29 |
| 199 | 3/10/1975 | 30 | 0.326 | 31.44 | 0.29 |
| 200 | 1/14/1960 | 4 | 0.326 | 31.6 | 0.29 |
| 201 | 10/11/1987 | 25 | 0.325 | 31.75 | 0.29 |
| 202 | 12/3/1966 | 13 | 0.324 | 31.91 | 0.29 |
| 203 | 1/14/1969 | 9 | 0.322 | 32.07 | 0.29 |
| 204 | 11/30/1952 | 6 | 0.321 | 32.23 | 0.28 |
| 205 | 1/30/1966 | 18 | 0.32 | 32.39 | 0.28 |
| 206 | 3/5/1980 | 16 | 0.32 | 32.54 | 0.28 |
| 207 | 1/28/2005 | 3 | 0.319 | 32.7 | 0.28 |
| 208 | 1/25/1997 | 34 | 0.318 | 32.86 | 0.28 |
| 209 | 3/1/1976 | 6 | 0.315 | 33.02 | 0.28 |
| 210 | 9/24/1986 | 14 | 0.314 | 33.18 | 0.28 |
| 211 | 1/3/2005 | 31 | 0.314 | 33.33 | 0.27 |
| 212 | 3/2/1976 | 4 | 0.314 | 33.49 | 0.27 |
| 213 | 12/24/1959 | 5 | 0.314 | 33.65 | 0.27 |
| 214 | 3/22/1992 | 18 | 0.314 | 33.81 | 0.27 |
| 215 | 5/12/1998 | 24 | 0.313 | 33.97 | 0.27 |
| 216 | 2/4/1976 | 68 | 0.311 | 34.12 | 0.27 |
| 217 | 12/6/1998 | 3 | 0.311 | 34.28 | 0.27 |
| 218 | 4/12/1976 | 9 | 0.309 | 34.44 | 0.27 |
| 219 | 2/20/2000 | 75 | 0.309 | 34.6 | 0.26 |
| 220 | 12/16/1978 | 49 | 0.306 | 34.76 | 0.26 |
| 221 | 4/4/2006 | 19 | 0.306 | 34.91 | 0.26 |
| 222 | 12/18/1977 | 6 | 0.305 | 35.07 | 0.26 |
| 223 | 4/1/1968 | 12 | 0.305 | 35.23 | 0.26 |
| 224 | 4/7/1965 | 67 | 0.302 | 35.39 | 0.26 |
| 225 | 3/2/1974 | 26 | 0.302 | 35.55 | 0.26 |
| 226 | 2/25/1958 | 4 | 0.302 | 35.7 | 0.26 |
| 227 | 11/25/1985 | 17 | 0.302 | 35.86 | 0.26 |
| 228 | 3/11/1978 | 17 | 0.302 | 36.02 | 0.25 |
| 229 | 12/7/1971 | 2 | 0.301 | 36.18 | 0.25 |
| 230 | 3/19/1979 | 25 | 0.301 | 36.33 | 0.25 |
| 231 | 3/31/1965 | 35 | 0.298 | 36.49 | 0.25 |
| 232 | 3/8/1986 | 6 | 0.297 | 36.65 | 0.25 |
| 233 | 3/29/1998 | 2 | 0.295 | 36.81 | 0.25 |
| 234 | 1/18/1954 | 34 | 0.295 | 36.97 | 0.25 |
| 235 | 3/14/1982 | 6 | 0.295 | 37.12 | 0.25 |
| 236 | 1/31/1993 | 2 | 0.295 | 37.28 | 0.25 |
| 237 | 1/15/1997 | 2 | 0.295 | 37.44 | 0.24 |
| 238 | 2/17/1994 | 3 | 0.294 | 37.6 | 0.24 |
| 239 | 2/4/1994 | 10 | 0.293 | 37.76 | 0.24 |
| 240 | 1/13/1952 | 11 | 0.293 | 37.91 | 0.24 |
| 241 | 10/20/1979 | 5 | 0.292 | 38.07 | 0.24 |
| 242 | 9/5/1978 | 5 | 0.291 | 38.23 | 0.24 |
| 243 | 1/28/1957 | 43 | 0.288 | 38.39 | 0.24 |
| 244 | 3/2/1980 | 17 | 0.288 | 38.55 | 0.24 |
| 245 | 3/7/1994 | 6 | 0.287 | 38.7 | 0.24 |
| 246 | 3/30/1954 | 2 | 0.287 | 38.86 | 0.24 |
| 247 | 3/11/1965 | 2 | 0.287 | 39.02 | 0.23 |
| 248 | 1/27/1994 | 1 | 0.287 | 39.18 | 0.23 |
| 249 | 2/19/1962 | 46 | 0.281 | 39.34 | 0.23 |
| 250 | 4/11/1998 | 8 | 0.281 | 39.49 | 0.23 |
| 251 | 11/25/2001 | 3 | 0.28 | 39.65 | 0.23 |
| 252 | 5/28/1990 | 5 | 0.279 | 39.81 | 0.23 |
| 253 | 3/24/1994 | 4 | 0.277 | 39.97 | 0.23 |
| 254 | 2/27/1996 | 4 | 0.275 | 40.13 | 0.23 |
| 255 | 3/19/1981 | 7 | 0.274 | 40.28 | 0.23 |
| 256 | 2/26/2004 | 11 | 0.274 | 40.44 | 0.23 |

| | | | | | |
|---|---|---|---|---|---|
| 257 | 4/20/1988 | 45 | 0.272 | 40.6 | 0.23 |
| 258 | 4/1/1958 | 11 | 0.272 | 40.76 | 0.22 |
| 259 | 1/5/1992 | 17 | 0.27 | 40.92 | 0.22 |
| 260 | 12/5/1980 | 6 | 0.27 | 41.07 | 0.22 |
| 261 | 12/30/1952 | 2 | 0.269 | 41.23 | 0.22 |
| 262 | 1/26/1999 | 16 | 0.267 | 41.39 | 0.22 |
| 263 | 2/11/2005 | 39 | 0.266 | 41.55 | 0.22 |
| 264 | 11/20/1990 | 4 | 0.266 | 41.71 | 0.22 |
| 265 | 12/30/1981 | 5 | 0.265 | 41.86 | 0.22 |
| 266 | 4/16/1995 | 5 | 0.265 | 42.02 | 0.22 |
| 267 | 3/16/1954 | 5 | 0.265 | 42.18 | 0.22 |
| 268 | 3/21/1969 | 10 | 0.265 | 42.34 | 0.22 |
| 269 | 3/7/1952 | 13 | 0.261 | 42.5 | 0.22 |
| 270 | 3/21/2006 | 4 | 0.26 | 42.65 | 0.21 |
| 271 | 4/17/1963 | 6 | 0.259 | 42.81 | 0.21 |
| 272 | 2/27/2006 | 11 | 0.258 | 42.97 | 0.21 |
| 273 | 2/19/1993 | 13 | 0.257 | 43.13 | 0.21 |
| 274 | 12/21/1988 | 5 | 0.257 | 43.29 | 0.21 |
| 275 | 3/19/2005 | 1 | 0.254 | 43.44 | 0.21 |
| 276 | 3/16/1957 | 2 | 0.254 | 43.6 | 0.21 |
| 277 | 1/23/1997 | 6 | 0.254 | 43.76 | 0.21 |
| 278 | 2/16/1959 | 19 | 0.253 | 43.92 | 0.21 |
| 279 | 2/29/1960 | 26 | 0.253 | 44.08 | 0.21 |
| 280 | 2/23/1993 | 3 | 0.253 | 44.23 | 0.21 |
| 281 | 11/24/1984 | 6 | 0.252 | 44.39 | 0.21 |
| 282 | 12/31/2004 | 4 | 0.252 | 44.55 | 0.21 |
| 283 | 4/12/1956 | 24 | 0.247 | 44.71 | 0.2 |
| 284 | 2/11/2000 | 28 | 0.246 | 44.87 | 0.2 |
| 285 | 1/16/1955 | 6 | 0.245 | 45.02 | 0.2 |
| 286 | 10/14/2006 | 3 | 0.244 | 45.18 | 0.2 |
| 287 | 12/29/1951 | 34 | 0.242 | 45.34 | 0.2 |
| 288 | 3/25/1998 | 3 | 0.241 | 45.5 | 0.2 |
| 289 | 3/13/1991 | 2 | 0.24 | 45.66 | 0.2 |
| 290 | 11/8/1998 | 20 | 0.238 | 45.81 | 0.2 |
| 291 | 1/9/2004 | 1 | 0.236 | 45.97 | 0.2 |
| 292 | 2/25/1987 | 26 | 0.232 | 46.13 | 0.2 |
| 293 | 4/18/1995 | 8 | 0.228 | 46.29 | 0.2 |
| 294 | 12/19/1951 | 4 | 0.227 | 46.45 | 0.2 |
| 295 | 2/22/1969 | 7 | 0.225 | 46.6 | 0.2 |
| 296 | 1/13/1962 | 2 | 0.225 | 46.76 | 0.2 |
| 297 | 2/8/1962 | 19 | 0.224 | 46.92 | 0.2 |
| 298 | 4/27/1960 | 7 | 0.224 | 47.08 | 0.19 |
| 299 | 2/6/1966 | 9 | 0.224 | 47.24 | 0.19 |
| 300 | 1/17/1952 | 16 | 0.223 | 47.39 | 0.19 |
| 301 | 2/13/1989 | 7 | 0.222 | 47.55 | 0.19 |
| 302 | 3/22/1983 | 5 | 0.221 | 47.71 | 0.19 |
| 303 | 3/19/1973 | 4 | 0.22 | 47.87 | 0.19 |
| 304 | 4/8/1975 | 19 | 0.22 | 48.03 | 0.19 |
| 305 | 4/20/1957 | 3 | 0.22 | 48.18 | 0.19 |
| 306 | 1/31/1996 | 23 | 0.219 | 48.34 | 0.19 |
| 307 | 3/6/1973 | 5 | 0.218 | 48.5 | 0.19 |
| 308 | 3/1/1981 | 29 | 0.217 | 48.66 | 0.19 |
| 309 | 3/17/1979 | 5 | 0.217 | 48.82 | 0.19 |
| 310 | 1/19/1978 | 5 | 0.216 | 48.97 | 0.19 |
| 311 | 2/23/1979 | 4 | 0.216 | 49.13 | 0.19 |
| 312 | 1/24/1983 | 3 | 0.216 | 49.29 | 0.19 |
| 313 | 1/21/1996 | 2 | 0.216 | 49.45 | 0.19 |
| 314 | 2/9/1985 | 8 | 0.216 | 49.61 | 0.18 |
| 315 | 3/9/1973 | 11 | 0.216 | 49.76 | 0.18 |
| 316 | 2/17/1998 | 10 | 0.215 | 49.92 | 0.18 |
| 317 | 1/8/1982 | 7 | 0.215 | 50.08 | 0.18 |
| 318 | 12/28/1977 | 8 | 0.215 | 50.24 | 0.18 |
| 319 | 4/5/1998 | 1 | 0.214 | 50.39 | 0.18 |
| 320 | 11/17/1964 | 8 | 0.213 | 50.55 | 0.18 |
| 321 | 2/18/1969 | 46 | 0.211 | 50.71 | 0.18 |
| 322 | 12/3/1983 | 3 | 0.211 | 50.87 | 0.18 |

| | | | | | |
|---|---|---|---|---|---|
| 323 | 1/13/1990 | 13 | 0.211 | 51.03 | 0.18 |
| 324 | 2/8/1981 | 14 | 0.211 | 51.18 | 0.18 |
| 325 | 5/7/1971 | 5 | 0.21 | 51.34 | 0.18 |
| 326 | 11/11/1972 | 3 | 0.209 | 51.5 | 0.18 |
| 327 | 2/22/2008 | 10 | 0.209 | 51.66 | 0.18 |
| 328 | 11/12/1960 | 4 | 0.209 | 51.82 | 0.18 |
| 329 | 3/28/2006 | 13 | 0.209 | 51.97 | 0.18 |
| 330 | 11/11/1954 | 10 | 0.208 | 52.13 | 0.18 |
| 331 | 11/2/1957 | 15 | 0.208 | 52.29 | 0.18 |
| 332 | 3/4/1973 | 6 | 0.208 | 52.45 | 0.17 |
| 333 | 3/8/1975 | 7 | 0.208 | 52.61 | 0.17 |
| 334 | 3/31/1978 | 3 | 0.207 | 52.76 | 0.17 |
| 335 | 3/17/1983 | 37 | 0.207 | 52.92 | 0.17 |
| 336 | 2/12/1968 | 8 | 0.206 | 53.08 | 0.17 |
| 337 | 12/25/1968 | 12 | 0.206 | 53.24 | 0.17 |
| 338 | 11/5/1960 | 2 | 0.203 | 53.4 | 0.17 |
| 339 | 3/1/1979 | 5 | 0.203 | 53.55 | 0.17 |
| 340 | 11/10/1997 | 4 | 0.202 | 53.71 | 0.17 |
| 341 | 10/14/1957 | 4 | 0.2 | 53.87 | 0.17 |
| 342 | 11/26/1981 | 53 | 0.2 | 54.03 | 0.17 |
| 343 | 1/26/1961 | 6 | 0.198 | 54.19 | 0.17 |
| 344 | 11/19/1982 | 9 | 0.198 | 54.34 | 0.17 |
| 345 | 4/29/1983 | 3 | 0.196 | 54.5 | 0.17 |
| 346 | 3/22/2005 | 4 | 0.194 | 54.66 | 0.17 |
| 347 | 11/14/1955 | 2 | 0.192 | 54.82 | 0.17 |
| 348 | 4/7/1978 | 2 | 0.192 | 54.98 | 0.17 |
| 349 | 11/21/1978 | 4 | 0.192 | 55.13 | 0.17 |
| 350 | 8/17/1977 | 20 | 0.19 | 55.29 | 0.17 |
| 351 | 11/20/1951 | 2 | 0.189 | 55.45 | 0.17 |
| 352 | 12/28/1974 | 11 | 0.188 | 55.61 | 0.16 |
| 353 | 12/12/1951 | 10 | 0.188 | 55.77 | 0.16 |
| 354 | 3/27/1998 | 6 | 0.187 | 55.92 | 0.16 |
| 355 | 11/11/1983 | 27 | 0.186 | 56.08 | 0.16 |
| 356 | 3/5/1975 | 10 | 0.185 | 56.24 | 0.16 |
| 357 | 3/5/1981 | 13 | 0.185 | 56.4 | 0.16 |
| 358 | 12/30/1976 | 23 | 0.184 | 56.56 | 0.16 |
| 359 | 12/13/1995 | 3 | 0.183 | 56.71 | 0.16 |
| 360 | 11/11/1985 | 25 | 0.182 | 56.87 | 0.16 |
| 361 | 12/1/1955 | 7 | 0.182 | 57.03 | 0.16 |
| 362 | 12/8/1984 | 2 | 0.182 | 57.19 | 0.16 |
| 363 | 1/10/1955 | 4 | 0.181 | 57.35 | 0.16 |
| 364 | 1/4/1987 | 12 | 0.181 | 57.5 | 0.16 |
| 365 | 1/16/1970 | 8 | 0.18 | 57.66 | 0.16 |
| 366 | 1/27/1968 | 16 | 0.179 | 57.82 | 0.16 |
| 367 | 9/25/1997 | 8 | 0.178 | 57.98 | 0.16 |
| 368 | 12/17/1952 | 4 | 0.177 | 58.14 | 0.16 |
| 369 | 5/22/2008 | 1 | 0.177 | 58.29 | 0.16 |
| 370 | 11/10/1994 | 2 | 0.176 | 58.45 | 0.16 |
| 371 | 1/7/1957 | 7 | 0.174 | 58.61 | 0.16 |
| 372 | 11/30/1967 | 1 | 0.173 | 58.77 | 0.16 |
| 373 | 11/14/1988 | 4 | 0.173 | 58.93 | 0.16 |
| 374 | 1/24/1965 | 1 | 0.172 | 59.08 | 0.16 |
| 375 | 3/25/1980 | 3 | 0.172 | 59.24 | 0.15 |
| 376 | 11/4/1987 | 35 | 0.169 | 59.4 | 0.15 |
| 377 | 3/23/1995 | 4 | 0.169 | 59.56 | 0.15 |
| 378 | 12/16/1984 | 2 | 0.166 | 59.72 | 0.15 |
| 379 | 8/28/1951 | 5 | 0.165 | 59.87 | 0.15 |
| 380 | 4/30/1955 | 18 | 0.164 | 60.03 | 0.15 |
| 381 | 10/11/1957 | 4 | 0.163 | 60.19 | 0.15 |
| 382 | 3/7/1992 | 1 | 0.162 | 60.35 | 0.15 |
| 383 | 2/21/1996 | 14 | 0.162 | 60.51 | 0.15 |
| 384 | 2/21/1959 | 10 | 0.162 | 60.66 | 0.15 |
| 385 | 2/27/1955 | 4 | 0.159 | 60.82 | 0.15 |
| 386 | 12/16/1987 | 20 | 0.159 | 60.98 | 0.15 |
| 387 | 1/30/1986 | 8 | 0.157 | 61.14 | 0.15 |
| 388 | 2/3/2008 | 14 | 0.157 | 61.3 | 0.15 |

| | | | | | |
|---|---|---|---|---|---|
| 389 | 10/9/1986 | 10 | 0.155 | 61.45 | 0.15 |
| 390 | 4/17/2000 | 17 | 0.155 | 61.61 | 0.15 |
| 391 | 1/2/2006 | 4 | 0.154 | 61.77 | 0.15 |
| 392 | 2/7/1986 | 13 | 0.154 | 61.93 | 0.15 |
| 393 | 2/10/1960 | 2 | 0.152 | 62.09 | 0.15 |
| 394 | 4/5/1969 | 2 | 0.152 | 62.24 | 0.15 |
| 395 | 4/26/1963 | 1 | 0.151 | 62.4 | 0.15 |
| 396 | 2/13/1995 | 24 | 0.151 | 62.56 | 0.15 |
| 397 | 1/17/1979 | 25 | 0.149 | 62.72 | 0.15 |
| 398 | 3/13/1971 | 1 | 0.149 | 62.88 | 0.15 |
| 399 | 3/28/1993 | 2 | 0.149 | 63.03 | 0.15 |
| 400 | 4/20/2007 | 1 | 0.149 | 63.19 | 0.14 |
| 401 | 3/1/1953 | 3 | 0.149 | 63.35 | 0.14 |
| 402 | 3/22/1954 | 74 | 0.147 | 63.51 | 0.14 |
| 403 | 2/14/1979 | 3 | 0.147 | 63.67 | 0.14 |
| 404 | 1/10/1993 | 6 | 0.147 | 63.82 | 0.14 |
| 405 | 2/15/1962 | 18 | 0.146 | 63.98 | 0.14 |
| 406 | 1/9/1991 | 2 | 0.146 | 64.14 | 0.14 |
| 407 | 10/18/2005 | 3 | 0.146 | 64.3 | 0.14 |
| 408 | 2/7/1966 | 2 | 0.145 | 64.45 | 0.14 |
| 409 | 10/28/1974 | 26 | 0.145 | 64.61 | 0.14 |
| 410 | 12/9/1954 | 4 | 0.144 | 64.77 | 0.14 |
| 411 | 11/9/1982 | 20 | 0.144 | 64.93 | 0.14 |
| 412 | 3/21/1987 | 5 | 0.144 | 65.09 | 0.14 |
| 413 | 11/25/1988 | 6 | 0.143 | 65.24 | 0.14 |
| 414 | 3/21/1979 | 5 | 0.142 | 65.4 | 0.14 |
| 415 | 3/19/1962 | 6 | 0.141 | 65.56 | 0.14 |
| 416 | 1/6/1953 | 34 | 0.14 | 65.72 | 0.14 |
| 417 | 1/12/1954 | 5 | 0.14 | 65.88 | 0.14 |
| 418 | 3/15/1965 | 2 | 0.14 | 66.03 | 0.14 |
| 419 | 3/10/1980 | 4 | 0.139 | 66.19 | 0.14 |
| 420 | 2/25/1996 | 21 | 0.139 | 66.35 | 0.14 |
| 421 | 3/20/1958 | 31 | 0.136 | 66.51 | 0.14 |
| 422 | 3/4/1996 | 7 | 0.136 | 66.67 | 0.14 |
| 423 | 1/18/1980 | 2 | 0.136 | 66.82 | 0.14 |
| 424 | 4/7/1999 | 7 | 0.136 | 66.98 | 0.14 |
| 425 | 12/10/2001 | 3 | 0.135 | 67.14 | 0.14 |
| 426 | 12/15/1957 | 5 | 0.134 | 67.3 | 0.14 |
| 427 | 3/31/1998 | 6 | 0.134 | 67.46 | 0.14 |
| 428 | 2/6/1992 | 19 | 0.134 | 67.61 | 0.14 |
| 429 | 2/2/1985 | 2 | 0.133 | 67.77 | 0.14 |
| 430 | 2/17/2000 | 3 | 0.131 | 67.93 | 0.13 |
| 431 | 3/10/1952 | 14 | 0.131 | 68.09 | 0.13 |
| 432 | 6/10/1957 | 5 | 0.131 | 68.25 | 0.13 |
| 433 | 3/13/1965 | 5 | 0.131 | 68.4 | 0.13 |
| 434 | 1/5/1989 | 8 | 0.13 | 68.56 | 0.13 |
| 435 | 12/18/1988 | 1 | 0.13 | 68.72 | 0.13 |
| 436 | 3/27/1985 | 23 | 0.128 | 68.88 | 0.13 |
| 437 | 4/1/1999 | 1 | 0.128 | 69.04 | 0.13 |
| 438 | 1/7/1992 | 7 | 0.126 | 69.19 | 0.13 |
| 439 | 3/8/2000 | 3 | 0.126 | 69.35 | 0.13 |
| 440 | 1/23/1995 | 44 | 0.124 | 69.51 | 0.13 |
| 441 | 2/29/1952 | 17 | 0.123 | 69.67 | 0.13 |
| 442 | 1/22/1962 | 17 | 0.123 | 69.83 | 0.13 |
| 443 | 9/24/1958 | 1 | 0.122 | 69.98 | 0.13 |
| 444 | 2/23/1953 | 1 | 0.12 | 70.14 | 0.13 |
| 445 | 4/14/1971 | 3 | 0.119 | 70.3 | 0.13 |
| 446 | 4/16/1990 | 3 | 0.118 | 70.46 | 0.13 |
| 447 | 11/25/1961 | 4 | 0.118 | 70.62 | 0.13 |
| 448 | 1/30/1955 | 4 | 0.118 | 70.77 | 0.13 |
| 449 | 12/5/1951 | 6 | 0.116 | 70.93 | 0.13 |
| 450 | 11/26/1960 | 9 | 0.114 | 71.09 | 0.13 |
| 451 | 1/26/1957 | 5 | 0.114 | 71.25 | 0.13 |
| 452 | 11/21/1955 | 4 | 0.114 | 71.41 | 0.13 |
| 453 | 10/30/1996 | 3 | 0.113 | 71.56 | 0.13 |
| 454 | 3/13/1986 | 9 | 0.113 | 71.72 | 0.13 |

| | | | | | |
|---|---|---|---|---|---|
| 455 | 11/8/1979 | 1 | 0.113 | 71.88 | 0.13 |
| 456 | 2/14/1963 | 3 | 0.11 | 72.04 | 0.13 |
| 457 | 12/7/2007 | 4 | 0.11 | 72.2 | 0.13 |
| 458 | 2/10/1970 | 7 | 0.11 | 72.35 | 0.13 |
| 459 | 1/10/1960 | 5 | 0.11 | 72.51 | 0.13 |
| 460 | 11/15/1963 | 4 | 0.108 | 72.67 | 0.13 |
| 461 | 2/4/1999 | 4 | 0.108 | 72.83 | 0.13 |
| 462 | 12/25/1994 | 2 | 0.108 | 72.99 | 0.13 |
| 463 | 10/31/1987 | 12 | 0.107 | 73.14 | 0.13 |
| 464 | 2/10/1992 | 2 | 0.106 | 73.3 | 0.13 |
| 465 | 3/26/1992 | 2 | 0.105 | 73.46 | 0.12 |
| 466 | 2/20/1994 | 2 | 0.103 | 73.62 | 0.12 |
| 467 | 12/26/1977 | 20 | 0.102 | 73.78 | 0.12 |
| 468 | 4/25/1994 | 2 | 0.102 | 73.93 | 0.12 |
| 469 | 5/21/1957 | 1 | 0.101 | 74.09 | 0.12 |
| 470 | 2/19/1998 | 5 | 0.101 | 74.25 | 0.12 |
| 471 | 2/7/1983 | 30 | 0.101 | 74.41 | 0.12 |
| 472 | 12/16/1965 | 7 | 0.101 | 74.57 | 0.12 |
| 473 | 10/22/1987 | 6 | 0.1 | 74.72 | 0.12 |
| 474 | 1/25/1952 | 5 | 0.099 | 74.88 | 0.12 |
| 475 | 11/25/1965 | 3 | 0.099 | 75.04 | 0.12 |
| 476 | 3/21/1995 | 5 | 0.099 | 75.2 | 0.12 |
| 477 | 12/14/1965 | 5 | 0.098 | 75.36 | 0.12 |
| 478 | 4/18/1983 | 10 | 0.098 | 75.51 | 0.12 |
| 479 | 4/1/1967 | 4 | 0.097 | 75.67 | 0.12 |
| 480 | 2/9/1975 | 7 | 0.096 | 75.83 | 0.12 |
| 481 | 4/3/1965 | 4 | 0.096 | 75.99 | 0.12 |
| 482 | 4/17/2004 | 3 | 0.095 | 76.15 | 0.12 |
| 483 | 4/12/1999 | 5 | 0.094 | 76.3 | 0.12 |
| 484 | 3/19/1994 | 10 | 0.094 | 76.46 | 0.12 |
| 485 | 4/2/1978 | 2 | 0.088 | 76.62 | 0.12 |
| 486 | 12/3/1992 | 1 | 0.087 | 76.78 | 0.12 |
| 487 | 11/10/1964 | 2 | 0.086 | 76.94 | 0.12 |
| 488 | 12/28/1952 | 2 | 0.085 | 77.09 | 0.12 |
| 489 | 4/1/1992 | 2 | 0.085 | 77.25 | 0.12 |
| 490 | 3/2/2004 | 3 | 0.084 | 77.41 | 0.12 |
| 491 | 11/13/1997 | 6 | 0.084 | 77.57 | 0.12 |
| 492 | 4/4/1965 | 7 | 0.084 | 77.73 | 0.12 |
| 493 | 9/26/1982 | 8 | 0.084 | 77.88 | 0.12 |
| 494 | 3/28/1960 | 2 | 0.083 | 78.04 | 0.12 |
| 495 | 1/16/1996 | 2 | 0.083 | 78.2 | 0.12 |
| 496 | 4/14/1988 | 3 | 0.082 | 78.36 | 0.12 |
| 497 | 4/2/1974 | 4 | 0.082 | 78.52 | 0.12 |
| 498 | 1/5/1982 | 3 | 0.081 | 78.67 | 0.12 |
| 499 | 3/14/1975 | 2 | 0.081 | 78.83 | 0.12 |
| 500 | 3/15/1991 | 1 | 0.081 | 78.99 | 0.12 |
| 501 | 4/2/1981 | 1 | 0.08 | 79.15 | 0.12 |
| 502 | 3/9/1978 | 2 | 0.08 | 79.3 | 0.12 |
| 503 | 12/5/1957 | 18 | 0.079 | 79.46 | 0.12 |
| 504 | 11/12/1976 | 1 | 0.079 | 79.62 | 0.12 |
| 505 | 11/18/1973 | 7 | 0.079 | 79.78 | 0.11 |
| 506 | 3/20/1954 | 3 | 0.079 | 79.94 | 0.11 |
| 507 | 1/5/1997 | 7 | 0.078 | 80.09 | 0.11 |
| 508 | 4/11/1965 | 42 | 0.077 | 80.25 | 0.11 |
| 509 | 12/11/1993 | 2 | 0.077 | 80.41 | 0.11 |
| 510 | 11/24/1978 | 3 | 0.077 | 80.57 | 0.11 |
| 511 | 2/24/1977 | 5 | 0.076 | 80.73 | 0.11 |
| 512 | 1/25/1994 | 3 | 0.076 | 80.88 | 0.11 |
| 513 | 2/3/1973 | 2 | 0.076 | 81.04 | 0.11 |
| 514 | 1/30/1978 | 5 | 0.075 | 81.2 | 0.11 |
| 515 | 12/5/2004 | 7 | 0.075 | 81.36 | 0.11 |
| 516 | 12/7/1972 | 28 | 0.074 | 81.52 | 0.11 |
| 517 | 3/6/1962 | 1 | 0.073 | 81.67 | 0.11 |
| 518 | 1/10/1957 | 4 | 0.072 | 81.83 | 0.11 |
| 519 | 12/9/1983 | 2 | 0.071 | 81.99 | 0.11 |
| 520 | 2/15/1969 | 3 | 0.07 | 82.15 | 0.11 |

| | | | | | |
|---|---|---|---|---|---|
| 521 | 3/29/1982 | 5 | 0.069 | 82.31 | 0.11 |
| 522 | 3/13/1969 | 1 | 0.068 | 82.46 | 0.11 |
| 523 | 12/27/1996 | 14 | 0.068 | 82.62 | 0.11 |
| 524 | 1/3/1997 | 1 | 0.068 | 82.78 | 0.11 |
| 525 | 3/26/1982 | 5 | 0.067 | 82.94 | 0.11 |
| 526 | 2/10/1989 | 1 | 0.066 | 83.1 | 0.11 |
| 527 | 4/19/1981 | 1 | 0.066 | 83.25 | 0.11 |
| 528 | 1/26/2001 | 6 | 0.066 | 83.41 | 0.11 |
| 529 | 3/22/1975 | 4 | 0.066 | 83.57 | 0.11 |
| 530 | 11/11/1978 | 23 | 0.065 | 83.73 | 0.11 |
| 531 | 12/21/1959 | 3 | 0.064 | 83.89 | 0.11 |
| 532 | 12/1/1973 | 2 | 0.064 | 84.04 | 0.11 |
| 533 | 10/31/1957 | 1 | 0.063 | 84.2 | 0.11 |
| 534 | 3/22/1962 | 1 | 0.063 | 84.36 | 0.11 |
| 535 | 2/2/1988 | 12 | 0.063 | 84.52 | 0.11 |
| 536 | 4/21/1963 | 2 | 0.062 | 84.68 | 0.11 |
| 537 | 12/15/1988 | 24 | 0.062 | 84.83 | 0.11 |
| 538 | 11/9/1964 | 2 | 0.062 | 84.99 | 0.11 |
| 539 | 1/2/2004 | 1 | 0.061 | 85.15 | 0.11 |
| 540 | 4/15/1976 | 1 | 0.061 | 85.31 | 0.11 |
| 541 | 7/29/1965 | 1 | 0.06 | 85.47 | 0.11 |
| 542 | 3/15/1987 | 2 | 0.06 | 85.62 | 0.11 |
| 543 | 12/27/1983 | 1 | 0.06 | 85.78 | 0.11 |
| 544 | 1/28/1969 | 2 | 0.059 | 85.94 | 0.11 |
| 545 | 2/25/1981 | 5 | 0.059 | 86.1 | 0.11 |
| 546 | 1/12/1971 | 1 | 0.058 | 86.26 | 0.11 |
| 547 | 1/23/2008 | 2 | 0.057 | 86.41 | 0.11 |
| 548 | 11/2/1974 | 1 | 0.057 | 86.57 | 0.11 |
| 549 | 3/5/1990 | 1 | 0.057 | 86.73 | 0.11 |
| 550 | 11/6/1969 | 2 | 0.056 | 86.89 | 0.11 |
| 551 | 3/24/1987 | 2 | 0.056 | 87.05 | 0.11 |
| 552 | 4/17/1975 | 5 | 0.054 | 87.2 | 0.11 |
| 553 | 4/22/1967 | 1 | 0.054 | 87.36 | 0.1 |
| 554 | 1/21/1995 | 2 | 0.054 | 87.52 | 0.1 |
| 555 | 1/31/1990 | 2 | 0.052 | 87.68 | 0.1 |
| 556 | 4/6/1986 | 2 | 0.052 | 87.84 | 0.1 |
| 557 | 11/30/1993 | 1 | 0.052 | 87.99 | 0.1 |
| 558 | 12/3/1954 | 1 | 0.052 | 88.15 | 0.1 |
| 559 | 4/19/1984 | 2 | 0.051 | 88.31 | 0.1 |
| 560 | 1/2/1990 | 7 | 0.051 | 88.47 | 0.1 |
| 561 | 7/25/1951 | 1 | 0.051 | 88.63 | 0.1 |
| 562 | 2/28/1969 | 1 | 0.051 | 88.78 | 0.1 |
| 563 | 4/25/1952 | 1 | 0.051 | 88.94 | 0.1 |
| 564 | 2/28/1973 | 7 | 0.05 | 89.1 | 0.1 |
| 565 | 11/27/1975 | 26 | 0.05 | 89.26 | 0.1 |
| 566 | 12/28/1992 | 2 | 0.048 | 89.42 | 0.1 |
| 567 | 3/17/2002 | 3 | 0.048 | 89.57 | 0.1 |
| 568 | 10/30/1992 | 1 | 0.047 | 89.73 | 0.1 |
| 569 | 12/21/1979 | 1 | 0.047 | 89.89 | 0.1 |
| 570 | 4/19/1967 | 1 | 0.047 | 90.05 | 0.1 |
| 571 | 12/8/1982 | 1 | 0.046 | 90.21 | 0.1 |
| 572 | 12/22/1965 | 1 | 0.046 | 90.36 | 0.1 |
| 573 | 1/8/1985 | 2 | 0.046 | 90.52 | 0.1 |
| 574 | 2/25/2005 | 2 | 0.044 | 90.68 | 0.1 |
| 575 | 3/16/1977 | 3 | 0.042 | 90.84 | 0.1 |
| 576 | 12/17/1970 | 1 | 0.042 | 91 | 0.1 |
| 577 | 11/14/1953 | 2 | 0.042 | 91.15 | 0.1 |
| 578 | 2/17/1971 | 1 | 0.042 | 91.31 | 0.1 |
| 579 | 3/3/1995 | 2 | 0.041 | 91.47 | 0.1 |
| 580 | 4/18/1996 | 2 | 0.041 | 91.63 | 0.1 |
| 581 | 4/26/1959 | 2 | 0.039 | 91.79 | 0.1 |
| 582 | 2/17/1955 | 4 | 0.039 | 91.94 | 0.1 |
| 583 | 12/30/1977 | 1 | 0.037 | 92.1 | 0.1 |
| 584 | 1/9/1973 | 1 | 0.036 | 92.26 | 0.1 |
| 585 | 3/25/1989 | 11 | 0.035 | 92.42 | 0.1 |
| 586 | 2/20/1985 | 1 | 0.033 | 92.58 | 0.1 |

| | | | | | |
|---|---|---|---|---|---|
| 587 | 10/10/1966 | 2 | 0.032 | 92.73 | 0.1 |
| 588 | 12/17/1967 | 1 | 0.032 | 92.89 | 0.1 |
| 589 | 2/26/1993 | 1 | 0.031 | 93.05 | 0.1 |
| 590 | 3/28/1963 | 3 | 0.028 | 93.21 | 0.1 |
| 591 | 11/23/1952 | 2 | 0.028 | 93.36 | 0.1 |
| 592 | 5/6/1971 | 1 | 0.028 | 93.52 | 0.1 |
| 593 | 4/5/1975 | 1 | 0.027 | 93.68 | 0.1 |
| 595 | 12/14/2001 | 3 | 0.027 | 94 | 0.1 |
| 595 | 1/31/2000 | 3 | 0.027 | 94 | 0.1 |
| 596 | 11/18/1983 | 1 | 0.025 | 94.15 | 0.1 |
| 597 | 11/10/1969 | 1 | 0.025 | 94.31 | 0.1 |
| 598 | 2/11/2007 | 1 | 0.024 | 94.47 | 0.1 |
| 599 | 2/23/1957 | 1 | 0.023 | 94.63 | 0.1 |
| 600 | 2/10/1997 | 2 | 0.023 | 94.79 | 0.1 |
| 601 | 1/19/1983 | 1 | 0.023 | 94.94 | 0.1 |
| 602 | 5/10/1980 | 1 | 0.022 | 95.1 | 0.1 |
| 603 | 2/5/1972 | 1 | 0.022 | 95.26 | 0.1 |
| 604 | 2/8/1959 | 1 | 0.02 | 95.42 | 0.1 |
| 605 | 1/31/1956 | 2 | 0.02 | 95.58 | 0.1 |
| 606 | 1/4/1998 | 1 | 0.019 | 95.73 | 0.1 |
| 607 | 3/26/1993 | 1 | 0.019 | 95.89 | 0.1 |
| 608 | 12/31/2005 | 1 | 0.018 | 96.05 | 0.1 |
| 609 | 4/27/1994 | 3 | 0.018 | 96.21 | 0.1 |
| 610 | 12/27/2006 | 1 | 0.018 | 96.37 | 0.1 |
| 611 | 1/6/1955 | 2 | 0.018 | 96.52 | 0.09 |
| 612 | 2/24/2008 | 3 | 0.015 | 96.68 | 0.09 |
| 613 | 4/1/1964 | 2 | 0.015 | 96.84 | 0.09 |
| 614 | 3/31/1967 | 1 | 0.013 | 97 | 0.09 |
| 615 | 2/22/2007 | 2 | 0.013 | 97.16 | 0.09 |
| 616 | 10/17/1971 | 1 | 0.013 | 97.31 | 0.09 |
| 617 | 12/31/2001 | 2 | 0.012 | 97.47 | 0.09 |
| 618 | 3/6/1983 | 1 | 0.012 | 97.63 | 0.09 |
| 619 | 2/19/1971 | 1 | 0.011 | 97.79 | 0.09 |
| 620 | 1/4/1989 | 1 | 0.011 | 97.95 | 0.09 |
| 621 | 3/11/1990 | 1 | 0.011 | 98.1 | 0.09 |
| 622 | 2/6/1965 | 1 | 0.01 | 98.26 | 0.09 |
| 623 | 2/6/1973 | 1 | 0.009 | 98.42 | 0.09 |
| 624 | 4/14/2006 | 1 | 0.007 | 98.58 | 0.09 |
| 625 | 2/2/1983 | 1 | 0.007 | 98.74 | 0.09 |
| 626 | 6/15/1995 | 1 | 0.006 | 98.89 | 0.09 |
| 627 | 3/14/1984 | 1 | 0.006 | 99.05 | 0.09 |
| 628 | 10/16/2005 | 1 | 0.005 | 99.21 | 0.09 |
| 629 | 12/3/1985 | 1 | 0.004 | 99.37 | 0.09 |
| 630 | 7/23/1977 | 1 | 0.004 | 99.53 | 0.09 |
| 631 | 2/18/1994 | 1 | 0.003 | 99.68 | 0.09 |
| 632 | 3/14/1983 | 1 | 0.003 | 99.84 | 0.09 |
| 633 | 2/24/2008 | 4 | 0.021 | 98.14 | 0.09 |
| 634 | 12/3/1985 | 1 | 0.015 | 98.29 | 0.09 |
| 635 | 12/4/1975 | 1 | 0.01 | 98.45 | 0.09 |
| 636 | 2/18/1994 | 1 | 0.009 | 98.6 | 0.09 |
| 637 | 12/19/1987 | 1 | 0.007 | 98.76 | 0.09 |
| 638 | 10/8/1961 | 1 | 0.007 | 98.91 | 0.09 |
| 639 | 2/8/1960 | 1 | 0.007 | 99.07 | 0.09 |
| 640 | 5/19/1957 | 1 | 0.004 | 99.22 | 0.09 |
| 641 | 10/1/1959 | 1 | 0.002 | 99.38 | 0.09 |
| 642 | 11/21/2004 | 1 | 0.002 | 99.53 | 0.09 |
| 643 | 1/1/1955 | 1 | 0 | 99.69 | 0.09 |
| 644 | 1/19/1998 | 1 | 0 | 99.84 | 0.09 |

**Pre Condition POC 3C**

Statistics - Node 3C Total Inflow

| Rank | Start Date | Event Duration (hours) | Event Peak (CFS) | Exceedance Frequency (percent) | Return Period (years) | (years) |
|---|---|---|---|---|---|---|
| 1 | 1/16/1978 | 7 | 10.869 | 0.41 | 58 | |
| 2 | 1/1/1982 | 4 | 10.109 | 0.83 | 29 | |
| 3 | 10/1/1983 | 12 | 7.084 | 1.24 | 19.33 | |
| 4 | 1/10/1978 | 4 | 7.03 | 1.66 | 14.5 | |
| 5 | 1/4/1995 | 7 | 6.982 | 2.07 | 11.6 | |
| 6 | 1/4/1978 | 10 | 4.822 | 2.49 | 9.67 | |
| 7 | 1/20/1982 | 7 | 4.794 | 2.9 | 8.29 | |
| 8 | 3/5/1995 | 24 | 4.765 | 3.32 | 7.25 | |
| 9 | 4/5/1967 | 2 | 4.411 | 3.73 | 6.44 | |
| 10 | 12/5/1966 | 46 | 4.367 | 4.15 | 5.8 | |
| 11 | 1/28/1980 | 12 | 4.356 | 4.56 | 5.27 | |
| 12 | 2/20/1980 | 5 | 4.314 | 4.98 | 4.83 | |
| 13 | 2/22/1998 | 42 | 4.298 | 5.39 | 4.46 | |
| 14 | 9/10/1976 | 4 | 4.15 | 5.81 | 4.14 | |
| 15 | 2/11/1959 | 3 | 3.976 | 6.22 | 3.87 | |
| 16 | 2/17/1980 | 37 | 3.846 | 6.64 | 3.63 | |
| 17 | 2/10/1978 | 4 | 3.705 | 7.05 | 3.41 | |
| 18 | 3/15/1986 | 12 | 3.698 | 7.47 | 3.22 | |
| 19 | 2/10/1963 | 2 | 3.54 | 7.88 | 3.05 | |
| 20 | 11/24/1983 | 2 | 3.43 | 8.3 | 2.9 | |
| 21 | 1/11/2001 | 8 | 3.367 | 8.71 | 2.76 | |
| 22 | 11/22/1965 | 20 | 3.351 | 9.13 | 2.64 | |
| 23 | 2/25/1969 | 6 | 3.269 | 9.54 | 2.52 | |
| 24 | 1/25/1969 | 10 | 3.217 | 9.96 | 2.42 | |
| 25 | 3/8/1968 | 8 | 3.097 | 10.37 | 2.32 | |
| 26 | 2/14/1986 | 9 | 3.045 | 10.79 | 2.23 | |
| 27 | 1/9/1998 | 3 | 2.981 | 11.2 | 2.15 | |
| 28 | 1/9/1980 | 51 | 2.914 | 11.62 | 2.07 | |
| 29 | 2/16/1980 | 4 | 2.91 | 12.03 | 2 | |
| 30 | 3/17/1982 | 16 | 2.904 | 12.45 | 1.93 | |
| 31 | 1/18/1955 | 4 | 2.874 | 12.86 | 1.87 | |
| 32 | 1/15/1993 | 33 | 2.788 | 13.28 | 1.81 | |
| 33 | 1/14/1978 | 8 | 2.74 | 13.69 | 1.76 | |
| 34 | 2/8/1993 | 10 | 2.733 | 14.11 | 1.71 | |
| 35 | 2/27/1983 | 14 | 2.713 | 14.52 | 1.66 | |
| 36 | 2/15/1992 | 4 | 2.709 | 14.94 | 1.61 | |
| 37 | 1/16/1973 | 4 | 2.676 | 15.35 | 1.57 | |
| 38 | 3/24/1983 | 2 | 2.663 | 15.77 | 1.53 | |
| 39 | 2/11/1973 | 7 | 2.654 | 16.18 | 1.49 | |
| 40 | 1/14/1993 | 3 | 2.653 | 16.6 | 1.45 | |
| 41 | 1/15/1979 | 3 | 2.546 | 17.01 | 1.41 | |
| 42 | 2/12/1978 | 4 | 2.497 | 17.43 | 1.38 | |
| 43 | 1/11/2005 | 8 | 2.497 | 17.84 | 1.35 | |
| 44 | 2/12/1992 | 21 | 2.45 | 18.26 | 1.32 | |
| 45 | 3/26/1991 | 8 | 2.442 | 18.67 | 1.29 | |
| 46 | 1/22/1964 | 4 | 2.427 | 19.09 | 1.26 | |
| 47 | 2/22/2004 | 2 | 2.406 | 19.5 | 1.23 | |
| 49 | 1/18/1973 | 4 | 2.394 | 20.33 | 1.18 | |
| 49 | 1/29/1983 | 5 | 2.394 | 20.33 | 1.18 | |
| 50 | 1/5/1977 | 6 | 2.363 | 20.75 | 1.16 | |
| 51 | 3/11/1995 | 3 | 2.338 | 21.16 | 1.14 | |
| 52 | 11/29/1970 | 6 | 2.337 | 21.58 | 1.12 | |
| 53 | 11/30/1982 | 9 | 2.296 | 21.99 | 1.09 | |
| 54 | 1/9/2005 | 19 | 2.188 | 22.41 | 1.07 | |
| 55 | 2/6/1969 | 7 | 2.172 | 22.82 | 1.05 | |
| 56 | 12/4/1974 | 5 | 2.172 | 23.24 | 1.04 | |
| 57 | 12/29/1965 | 3 | 2.155 | 23.65 | 1.02 | |
| 58 | 1/12/1960 | 5 | 2.131 | 24.07 | 1 | |

**10-year Q:** 5.191 cfs
**5-year Q:** 4.330 cfs
**2-year Q:** 2.910 cfs

**Lower Flow Threshold:** 10%

0.1xQ2 : 0.291 cfs

| | | | | | |
|---|---|---|---|---|---|
| 59 | 2/14/1980 | 24 | 2.122 | 24.48 | 0.98 |
| 60 | 11/15/1952 | 19 | 2.101 | 24.9 | 0.97 |
| 61 | 2/8/1998 | 7 | 2.033 | 25.31 | 0.95 |
| 62 | 3/1/1970 | 19 | 1.949 | 25.73 | 0.94 |
| 63 | 6/10/1990 | 1 | 1.918 | 26.14 | 0.92 |
| 64 | 11/14/1972 | 2 | 1.911 | 26.56 | 0.91 |
| 65 | 1/6/1993 | 21 | 1.876 | 26.97 | 0.89 |
| 66 | 3/1/1983 | 32 | 1.875 | 27.39 | 0.88 |
| 67 | 11/29/1985 | 7 | 1.875 | 27.8 | 0.87 |
| 68 | 3/15/1952 | 7 | 1.863 | 28.22 | 0.85 |
| 69 | 12/24/1971 | 5 | 1.85 | 28.63 | 0.84 |
| 70 | 2/21/2005 | 50 | 1.823 | 29.05 | 0.83 |
| 71 | 10/19/2004 | 22 | 1.809 | 29.46 | 0.82 |
| 72 | 11/30/2007 | 7 | 1.796 | 29.88 | 0.81 |
| 73 | 2/7/1994 | 2 | 1.786 | 30.29 | 0.79 |
| 74 | 2/28/1978 | 39 | 1.691 | 30.71 | 0.78 |
| 75 | 1/13/1957 | 4 | 1.642 | 31.12 | 0.77 |
| 76 | 1/29/1981 | 3 | 1.619 | 31.54 | 0.76 |
| 77 | 3/1/1991 | 19 | 1.563 | 31.95 | 0.75 |
| 78 | 12/18/1967 | 3 | 1.5 | 32.37 | 0.74 |
| 79 | 11/21/1963 | 3 | 1.498 | 32.78 | 0.73 |
| 80 | 1/6/1987 | 3 | 1.453 | 33.2 | 0.73 |
| 81 | 11/18/1986 | 6 | 1.441 | 33.61 | 0.72 |
| 82 | 12/25/2003 | 3 | 1.433 | 34.02 | 0.71 |
| 83 | 4/3/1958 | 4 | 1.433 | 34.44 | 0.7 |
| 84 | 12/2/1961 | 3 | 1.399 | 34.85 | 0.69 |
| 86 | 12/22/1971 | 8 | 1.367 | 35.68 | 0.67 |
| 86 | 1/12/1997 | 16 | 1.367 | 35.68 | 0.67 |
| 87 | 1/16/1952 | 9 | 1.357 | 36.1 | 0.67 |
| 88 | 12/24/1988 | 4 | 1.334 | 36.51 | 0.66 |
| 89 | 1/20/1962 | 4 | 1.319 | 36.93 | 0.65 |
| 90 | 1/27/2008 | 32 | 1.309 | 37.34 | 0.64 |
| 91 | 10/18/2004 | 2 | 1.3 | 37.76 | 0.64 |
| 92 | 12/27/1984 | 3 | 1.236 | 38.17 | 0.63 |
| 93 | 3/23/1964 | 3 | 1.2 | 38.59 | 0.62 |
| 94 | 4/1/1982 | 2 | 1.171 | 39 | 0.62 |
| 95 | 2/19/2005 | 2 | 1.16 | 39.42 | 0.61 |
| 96 | 12/6/1997 | 7 | 1.159 | 39.83 | 0.6 |
| 97 | 4/11/1967 | 2 | 1.152 | 40.25 | 0.6 |
| 98 | 3/13/1967 | 4 | 1.12 | 40.66 | 0.59 |
| 99 | 2/6/1978 | 4 | 1.098 | 41.08 | 0.59 |
| 100 | 12/2/1952 | 3 | 1.056 | 41.49 | 0.58 |

**Pre Condition POC 3D**

Statistics - Node 3D Total Inflow

| Rank | Start Date | Event Duration (hours) | Event Peak (CFS) | Exceedance Frequency (percent) | Return Period (years) |
|---|---|---|---|---|---|
| 1 | 1/16/1978 | 8 | 45.33 | 0.32 | 58 |
| 2 | 1/1/1982 | 5 | 39.61 | 0.63 | 29 |
| 3 | 1/4/1995 | 9 | 29.348 | 0.95 | 19.33 |
| 4 | 1/10/1978 | 5 | 27.614 | 1.26 | 14.5 |
| 5 | 10/1/1983 | 4 | 26.027 | 1.58 | 11.6 |
| 6 | 1/4/1978 | 5 | 19.499 | 1.89 | 9.67 |
| 7 | 12/5/1966 | 25 | 18.283 | 2.21 | 8.29 |
| 8 | 2/20/1980 | 6 | 17.505 | 2.52 | 7.25 |
| 9 | 1/20/1982 | 3 | 17.418 | 2.84 | 6.44 |
| 10 | 3/5/1995 | 24 | 17.365 | 3.15 | 5.8 |
| 11 | 1/28/1980 | 12 | 17.262 | 3.47 | 5.27 |
| 12 | 2/23/1998 | 8 | 16.299 | 3.79 | 4.83 |
| 13 | 12/6/1966 | 13 | 16.215 | 4.1 | 4.46 |
| 14 | 4/5/1967 | 3 | 15.979 | 4.42 | 4.14 |
| 15 | 9/10/1976 | 5 | 15.311 | 4.73 | 3.87 |
| 16 | 2/17/1980 | 12 | 14.204 | 5.05 | 3.63 |
| 17 | 2/11/1959 | 4 | 13.837 | 5.36 | 3.41 |
| 18 | 3/16/1986 | 4 | 13.834 | 5.68 | 3.22 |
| 19 | 2/10/1963 | 3 | 12.95 | 5.99 | 3.05 |
| 20 | 2/10/1978 | 4 | 12.869 | 6.31 | 2.9 |
| 21 | 1/25/1969 | 10 | 12.766 | 6.62 | 2.76 |
| 22 | 1/11/2001 | 8 | 12.667 | 6.94 | 2.64 |
| 23 | 2/19/1980 | 4 | 12.548 | 7.26 | 2.52 |
| 24 | 11/22/1965 | 21 | 12.425 | 7.57 | 2.42 |
| 25 | 3/8/1968 | 8 | 11.753 | 7.89 | 2.32 |
| 26 | 2/14/1986 | 9 | 11.752 | 8.2 | 2.23 |
| 27 | 11/24/1983 | 3 | 11.748 | 8.52 | 2.15 |
| 28 | 2/25/1969 | 7 | 11.434 | 8.83 | 2.07 |
| 29 | 1/18/1955 | 5 | 10.871 | 9.15 | 2 |
| 30 | 1/9/1998 | 4 | 10.848 | 9.46 | 1.93 |
| 31 | 1/11/1980 | 10 | 10.674 | 9.78 | 1.87 |
| 32 | 1/14/1978 | 8 | 10.63 | 10.09 | 1.81 |
| 33 | 2/8/1993 | 4 | 10.262 | 10.41 | 1.76 |
| 34 | 2/16/1980 | 4 | 9.889 | 10.73 | 1.71 |
| 35 | 3/17/1982 | 11 | 9.869 | 11.04 | 1.66 |
| 36 | 2/27/1983 | 4 | 9.757 | 11.36 | 1.61 |
| 37 | 2/15/1992 | 5 | 9.667 | 11.67 | 1.57 |
| 38 | 2/11/1973 | 4 | 9.438 | 11.99 | 1.53 |
| 39 | 1/16/1973 | 4 | 9.418 | 12.3 | 1.49 |
| 40 | 2/22/2004 | 3 | 9.229 | 12.62 | 1.45 |
| 41 | 1/16/1993 | 8 | 9.141 | 12.93 | 1.41 |
| 42 | 11/29/1970 | 7 | 9.123 | 13.25 | 1.38 |
| 43 | 3/24/1983 | 3 | 8.86 | 13.56 | 1.35 |
| 44 | 3/26/1991 | 9 | 8.754 | 13.88 | 1.32 |
| 45 | 2/12/1978 | 4 | 8.661 | 14.2 | 1.29 |
| 46 | 1/11/2005 | 8 | 8.644 | 14.51 | 1.26 |
| 47 | 1/15/1979 | 4 | 8.501 | 14.83 | 1.23 |
| 48 | 11/30/1982 | 9 | 8.493 | 15.14 | 1.21 |
| 49 | 3/11/1995 | 4 | 8.34 | 15.46 | 1.18 |
| 50 | 1/22/1964 | 5 | 8.289 | 15.77 | 1.16 |
| 51 | 1/14/1993 | 3 | 8.273 | 16.09 | 1.14 |
| 53 | 1/18/1973 | 5 | 8.201 | 16.72 | 1.09 |
| 53 | 1/29/1983 | 6 | 8.201 | 16.72 | 1.09 |
| 54 | 2/12/1992 | 6 | 8.19 | 17.03 | 1.07 |
| 55 | 1/9/2005 | 7 | 8.149 | 17.35 | 1.05 |
| 56 | 12/4/1974 | 6 | 7.882 | 17.67 | 1.04 |
| 57 | 1/5/1977 | 7 | 7.843 | 17.98 | 1.02 |
| 58 | 6/10/1990 | 2 | 7.707 | 18.3 | 1 |
| 59 | 11/29/1985 | 8 | 7.43 | 18.61 | 0.98 |

**10-year Q:** 20.615 cfs
**5-year Q:** 16.671 cfs
**2-year Q:** 10.871 cfs

**Lower Flow Threshold:** 10%

0.1xQ2 : 1.087 cfs

| | | | | | |
|---|---|---|---|---|---|
| 60 | 1/12/1960 | 6 | 7.42 | 18.93 | 0.97 |
| 61 | 2/14/1980 | 3 | 7.388 | 19.24 | 0.95 |
| 62 | 2/6/1969 | 4 | 7.386 | 19.56 | 0.94 |
| 63 | 2/8/1998 | 7 | 7.178 | 19.87 | 0.92 |
| 64 | 10/1/1983 | 4 | 7.125 | 20.19 | 0.91 |
| 65 | 12/29/1965 | 4 | 7.114 | 20.5 | 0.89 |
| 66 | 3/1/1983 | 5 | 7.047 | 20.82 | 0.88 |
| 67 | 11/21/1963 | 4 | 6.841 | 21.14 | 0.87 |
| 68 | 3/1/1978 | 8 | 6.814 | 21.45 | 0.85 |
| 69 | 10/20/2004 | 7 | 6.697 | 21.77 | 0.84 |
| 70 | 12/24/1971 | 5 | 6.588 | 22.08 | 0.83 |
| 71 | 11/15/1952 | 3 | 6.586 | 22.4 | 0.82 |
| 72 | 1/6/1993 | 4 | 6.543 | 22.71 | 0.81 |
| 73 | 11/30/2007 | 3 | 6.405 | 23.03 | 0.79 |
| 74 | 11/14/1972 | 3 | 6.341 | 23.34 | 0.78 |
| 75 | 3/1/1970 | 4 | 6.229 | 23.66 | 0.77 |
| 76 | 3/15/1986 | 4 | 6.17 | 23.97 | 0.76 |
| 77 | 1/13/1957 | 5 | 5.976 | 24.29 | 0.75 |
| 78 | 3/1/1991 | 8 | 5.854 | 24.61 | 0.74 |
| 79 | 2/22/2005 | 4 | 5.775 | 24.92 | 0.73 |
| 80 | 3/15/1952 | 7 | 5.677 | 25.24 | 0.73 |
| 81 | 2/7/1994 | 3 | 5.665 | 25.55 | 0.72 |
| 82 | 1/29/1981 | 3 | 5.551 | 25.87 | 0.71 |
| 83 | 12/6/1997 | 8 | 5.27 | 26.18 | 0.7 |
| 84 | 12/2/1961 | 4 | 5.068 | 26.5 | 0.69 |
| 85 | 1/20/1962 | 6 | 5.023 | 26.81 | 0.68 |
| 86 | 1/16/1952 | 5 | 4.932 | 27.13 | 0.67 |
| 87 | 12/18/1967 | 4 | 4.839 | 27.44 | 0.67 |
| 88 | 12/25/2003 | 4 | 4.745 | 27.76 | 0.66 |
| 89 | 1/9/1980 | 4 | 4.574 | 28.08 | 0.65 |
| 90 | 11/18/1986 | 6 | 4.563 | 28.39 | 0.64 |
| 92 | 12/22/1971 | 4 | 4.531 | 29.02 | 0.63 |
| 92 | 1/12/1997 | 4 | 4.531 | 29.02 | 0.63 |
| 93 | 1/15/1993 | 7 | 4.525 | 29.34 | 0.62 |
| 94 | 4/3/1958 | 5 | 4.416 | 29.65 | 0.62 |
| 95 | 12/24/1988 | 4 | 4.365 | 29.97 | 0.61 |
| 96 | 3/13/1967 | 5 | 4.355 | 30.28 | 0.6 |
| 97 | 1/6/1987 | 4 | 4.293 | 30.6 | 0.6 |
| 98 | 12/3/1966 | 7 | 4.28 | 30.91 | 0.59 |
| 99 | 4/1/1982 | 3 | 4.193 | 31.23 | 0.59 |
| 100 | 2/23/2005 | 4 | 4.135 | 31.55 | 0.58 |
| 101 | 4/11/1967 | 3 | 4.11 | 31.86 | 0.57 |
| 102 | 2/19/2005 | 3 | 4.093 | 32.18 | 0.57 |
| 103 | 10/18/2004 | 3 | 4.072 | 32.49 | 0.56 |
| 104 | 5/8/1977 | 4 | 4.021 | 32.81 | 0.56 |
| 105 | 10/25/1951 | 2 | 3.912 | 33.12 | 0.55 |
| 106 | 1/27/2008 | 3 | 3.858 | 33.44 | 0.55 |
| 107 | 12/27/1984 | 4 | 3.784 | 33.75 | 0.54 |
| 108 | 1/10/1980 | 3 | 3.731 | 34.07 | 0.54 |
| 109 | 1/4/1978 | 4 | 3.726 | 34.38 | 0.53 |
| 110 | 1/4/1974 | 7 | 3.698 | 34.7 | 0.53 |
| 111 | 1/22/1967 | 8 | 3.636 | 35.02 | 0.52 |
| 112 | 3/23/1964 | 4 | 3.571 | 35.33 | 0.52 |
| 113 | 6/1/1996 | 2 | 3.563 | 35.65 | 0.51 |
| 114 | 2/22/1998 | 12 | 3.494 | 35.96 | 0.51 |
| 115 | 2/26/2004 | 6 | 3.455 | 36.28 | 0.5 |
| 116 | 2/6/1978 | 4 | 3.452 | 36.59 | 0.5 |
| 117 | 1/20/1982 | 3 | 3.363 | 36.91 | 0.5 |
| 118 | 3/16/1958 | 6 | 3.337 | 37.22 | 0.49 |
| 119 | 1/29/1957 | 8 | 3.234 | 37.54 | 0.49 |
| 120 | 12/2/1952 | 4 | 3.228 | 37.85 | 0.48 |
| 121 | 2/28/1957 | 2 | 3.196 | 38.17 | 0.48 |
| 122 | 3/10/1986 | 3 | 3.182 | 38.49 | 0.48 |
| 123 | 10/12/1987 | 5 | 3.111 | 38.8 | 0.47 |
| 124 | 1/6/1979 | 7 | 2.979 | 39.12 | 0.47 |
| 125 | 1/31/1979 | 6 | 2.937 | 39.43 | 0.46 |
| 126 | 12/4/1972 | 3 | 2.93 | 39.75 | 0.46 |

**Pre Condition POC 3E**

Statistics - Node 3E Total Inflow

| Rank | Start Date | Event Duration (hours) | Event Peak (CFS) | Exceedance Frequency (percent) | Return Period (years) | (years) |
|---|---|---|---|---|---|---|
| 1 | 1/16/1978 | 5 | 1.848 | 0.46 | 58 | |
| 2 | 1/1/1982 | 3 | 1.834 | 0.92 | 29 | |
| 3 | 10/1/1983 | 11 | 1.475 | 1.38 | 19.33 | |
| 4 | 1/10/1978 | 3 | 1.261 | 1.83 | 14.5 | |
| 5 | 1/4/1995 | 6 | 1.156 | 2.29 | 11.6 | |
| 6 | 1/20/1982 | 6 | 1.026 | 2.75 | 9.67 | |
| 7 | 4/5/1967 | 1 | 1.008 | 3.21 | 8.29 | |
| 8 | 3/5/1995 | 22 | 0.93 | 3.67 | 7.25 | |
| 9 | 2/10/1978 | 3 | 0.857 | 4.13 | 6.44 | |
| 10 | 3/15/1986 | 11 | 0.856 | 4.59 | 5.8 | |
| 11 | 2/11/1959 | 3 | 0.853 | 5.05 | 5.27 | |
| 12 | 1/4/1978 | 10 | 0.823 | 5.5 | 4.83 | |
| 13 | 2/10/1963 | 1 | 0.811 | 5.96 | 4.46 | |
| 14 | 2/22/1998 | 41 | 0.803 | 6.42 | 4.14 | |
| 15 | 9/10/1976 | 4 | 0.801 | 6.88 | 3.87 | |
| 16 | 2/20/1980 | 4 | 0.783 | 7.34 | 3.63 | |
| 17 | 2/17/1980 | 36 | 0.76 | 7.8 | 3.41 | |
| 18 | 1/28/1980 | 10 | 0.758 | 8.26 | 3.22 | |
| 19 | 11/24/1983 | 2 | 0.748 | 8.72 | 3.05 | |
| 20 | 2/16/1980 | 3 | 0.7 | 9.17 | 2.9 | |
| 21 | 3/17/1982 | 15 | 0.699 | 9.63 | 2.76 | |
| 22 | 12/5/1966 | 45 | 0.697 | 10.09 | 2.64 | |
| 23 | 1/9/1980 | 49 | 0.697 | 10.55 | 2.52 | |
| 24 | 11/22/1965 | 20 | 0.64 | 11.01 | 2.42 | |
| 25 | 2/25/1969 | 6 | 0.635 | 11.47 | 2.32 | |
| 26 | 1/9/1998 | 2 | 0.627 | 11.93 | 2.23 | |
| 27 | 2/11/1973 | 1 | 0.613 | 12.39 | 2.15 | |
| 28 | 1/18/1955 | 3 | 0.606 | 12.84 | 2.07 | |
| 29 | 1/14/1993 | 2 | 0.606 | 13.3 | 2 | |
| 30 | 2/12/1992 | 21 | 0.605 | 13.76 | 1.93 | |
| 31 | 2/12/1978 | 2 | 0.602 | 14.22 | 1.87 | |
| 32 | 3/24/1983 | 2 | 0.595 | 14.68 | 1.81 | |
| 33 | 1/11/2001 | 5 | 0.58 | 15.14 | 1.76 | |
| 34 | 1/15/1979 | 2 | 0.579 | 15.6 | 1.71 | |
| 35 | 2/15/1992 | 2 | 0.564 | 16.06 | 1.66 | |
| 36 | 2/14/1986 | 8 | 0.543 | 16.51 | 1.61 | |
| 37 | 12/29/1965 | 3 | 0.542 | 16.97 | 1.57 | |
| 38 | 1/25/1969 | 9 | 0.539 | 17.43 | 1.53 | |
| 39 | 3/8/1968 | 6 | 0.534 | 17.89 | 1.49 | |
| 40 | 1/15/1993 | 33 | 0.531 | 18.35 | 1.45 | |
| 41 | 2/27/1983 | 14 | 0.522 | 18.81 | 1.41 | |
| 42 | 11/15/1952 | 17 | 0.509 | 19.27 | 1.38 | |
| 43 | 1/22/1964 | 3 | 0.509 | 19.72 | 1.35 | |
| 44 | 2/22/2004 | 2 | 0.499 | 20.18 | 1.32 | |
| 46 | 1/29/1983 | 4 | 0.498 | 21.1 | 1.26 | |
| 46 | 1/18/1973 | 4 | 0.498 | 21.1 | 1.26 | |
| 47 | 1/5/1977 | 6 | 0.489 | 21.56 | 1.23 | |
| 48 | 3/11/1995 | 2 | 0.488 | 22.02 | 1.21 | |
| 49 | 1/11/2005 | 6 | 0.485 | 22.48 | 1.18 | |
| 50 | 2/14/1980 | 24 | 0.482 | 22.94 | 1.16 | |
| 51 | 1/14/1978 | 7 | 0.48 | 23.39 | 1.14 | |
| 52 | 2/8/1993 | 10 | 0.478 | 23.85 | 1.12 | |
| 53 | 6/10/1990 | 1 | 0.455 | 24.31 | 1.09 | |
| 54 | 11/30/2007 | 1 | 0.451 | 24.77 | 1.07 | |
| 55 | 1/6/1993 | 24 | 0.449 | 25.23 | 1.05 | |
| 56 | 11/21/1963 | 2 | 0.447 | 25.69 | 1.04 | |
| 57 | 3/1/1970 | 19 | 0.446 | 26.15 | 1.02 | |
| 58 | 3/26/1991 | 7 | 0.438 | 26.61 | 1 | |

**10-year Q:** 1.048 cfs
**5-year Q:** 0.835 cfs
**2-year Q:** 0.606 cfs

**Lower Flow Threshold:** 10%

0.1xQ2 : 0.061 cfs

| | | | | | |
|---|---|---|---|---|---|
| 59 | 11/14/1972 | 2 | 0.424 | 27.06 | 0.98 |
| 61 | 2/21/2005 | 49 | 0.418 | 27.98 | 0.95 |
| 61 | 2/7/1994 | 1 | 0.418 | 27.98 | 0.95 |
| 62 | 10/19/2004 | 20 | 0.411 | 28.44 | 0.94 |
| 63 | 1/29/1981 | 2 | 0.41 | 28.9 | 0.92 |
| 64 | 3/15/1952 | 6 | 0.405 | 29.36 | 0.91 |
| 65 | 11/30/1982 | 8 | 0.403 | 29.82 | 0.89 |
| 66 | 1/9/2005 | 18 | 0.398 | 30.28 | 0.88 |
| 67 | 1/12/1960 | 5 | 0.397 | 30.73 | 0.87 |
| 68 | 2/8/1998 | 5 | 0.385 | 31.19 | 0.85 |
| 69 | 11/29/1970 | 5 | 0.384 | 31.65 | 0.84 |
| 70 | 11/18/1986 | 4 | 0.382 | 32.11 | 0.83 |
| 71 | 2/6/1969 | 7 | 0.37 | 32.57 | 0.82 |
| 72 | 11/29/1985 | 7 | 0.362 | 33.03 | 0.81 |
| 73 | 2/19/2005 | 2 | 0.35 | 33.49 | 0.79 |
| 74 | 12/24/1971 | 3 | 0.349 | 33.94 | 0.78 |
| 75 | 10/18/2004 | 2 | 0.348 | 34.4 | 0.77 |
| 76 | 1/16/1973 | 2 | 0.343 | 34.86 | 0.76 |
| 77 | 5/8/1977 | 3 | 0.336 | 35.32 | 0.75 |
| 78 | 3/1/1983 | 30 | 0.333 | 35.78 | 0.74 |
| 79 | 12/4/1974 | 2 | 0.321 | 36.24 | 0.73 |
| 80 | 3/1/1991 | 18 | 0.316 | 36.7 | 0.73 |
| 81 | 1/7/1987 | 1 | 0.31 | 37.16 | 0.72 |
| 82 | 1/26/1956 | 10 | 0.303 | 37.61 | 0.71 |
| 83 | 12/25/2003 | 2 | 0.297 | 38.07 | 0.7 |
| 84 | 4/1/1982 | 2 | 0.293 | 38.53 | 0.69 |
| 85 | 12/6/1997 | 7 | 0.292 | 38.99 | 0.68 |
| 86 | 1/27/2008 | 32 | 0.289 | 39.45 | 0.67 |
| 87 | 2/28/1957 | 1 | 0.286 | 39.91 | 0.67 |
| 88 | 3/10/1986 | 2 | 0.285 | 40.37 | 0.66 |
| 89 | 2/28/1978 | 39 | 0.284 | 40.83 | 0.65 |
| 90 | 12/27/1984 | 3 | 0.275 | 41.28 | 0.64 |
| 91 | 3/16/1958 | 4 | 0.269 | 41.74 | 0.64 |
| 92 | 1/13/1957 | 4 | 0.263 | 42.2 | 0.63 |
| 93 | 12/2/1961 | 2 | 0.255 | 42.66 | 0.62 |
| 94 | 4/3/1958 | 3 | 0.254 | 43.12 | 0.62 |
| 95 | 3/11/2006 | 2 | 0.254 | 43.58 | 0.61 |
| 96 | 1/20/1962 | 3 | 0.233 | 44.04 | 0.6 |
| 97 | 12/2/1952 | 3 | 0.225 | 44.5 | 0.6 |
| 98 | 12/18/1984 | 21 | 0.224 | 44.95 | 0.59 |
| 99 | 12/24/1988 | 3 | 0.224 | 45.41 | 0.59 |
| 100 | 2/6/1978 | 2 | 0.224 | 45.87 | 0.58 |

**Pre Condition POC 3F**

Statistics - Node 3F Total Inflow

| Rank | Start Date | Event Duration (hours) | Event Peak (CFS) | Exceedance Frequency (percent) | Return Period (years) | Inflow (CFS) |
|---|---|---|---|---|---|---|
| 1 | 1/16/1978 | 1/8/1900 | 10.181 | 0.24 | 58 | |
| 2 | 1/1/1982 | 1/26/1900 | 10.156 | 0.48 | 29 | |
| 3 | 10/1/1983 | 1/11/1900 | 8.304 | 0.72 | 19.33 | |
| 4 | 1/9/1978 | 2/1/1900 | 7.152 | 0.95 | 14.5 | |
| 5 | 4/5/1967 | 1/1/1900 | 6.933 | 1.19 | 11.6 | |
| 6 | 1/20/1982 | 1/22/1900 | 6.769 | 1.43 | 9.67 | |
| 7 | 1/4/1995 | 1/8/1900 | 6.442 | 1.67 | 8.29 | |
| 8 | 2/9/1963 | 1/24/1900 | 5.78 | 1.91 | 7.25 | |
| 9 | 2/7/1978 | 3/14/1900 | 5.627 | 2.15 | 6.44 | |
| 10 | 3/15/1986 | 1/24/1900 | 5.58 | 2.39 | 5.8 | |
| 11 | 3/5/1995 | 1/24/1900 | 5.365 | 2.63 | 5.27 | |
| 12 | 2/11/1959 | 1/4/1900 | 5.206 | 2.86 | 4.83 | |
| 13 | 2/16/1980 | 4/19/1900 | 4.901 | 3.1 | 4.46 | |
| 14 | 3/17/1982 | 1/23/1900 | 4.899 | 3.34 | 4.14 | |
| 15 | 2/22/1998 | 2/18/1900 | 4.891 | 3.58 | 3.87 | |
| 16 | 1/9/1980 | 3/20/1900 | 4.852 | 3.82 | 3.63 | |
| 17 | 2/22/2004 | 1/3/1900 | 4.84 | 4.06 | 3.41 | |
| 18 | 1/4/1978 | 1/23/1900 | 4.784 | 4.3 | 3.22 | |
| 19 | 1/28/1980 | 2/4/1900 | 4.733 | 4.53 | 3.05 | |
| 20 | 2/12/1978 | 1/13/1900 | 4.728 | 4.77 | 2.9 | |
| 21 | 6/10/1990 | 1/1/1900 | 4.711 | 5.01 | 2.76 | |
| 22 | 9/10/1976 | 1/16/1900 | 4.707 | 5.25 | 2.64 | |
| 23 | 1/9/1998 | 1/13/1900 | 4.647 | 5.49 | 2.52 | |
| 24 | 11/24/1983 | 1/2/1900 | 4.613 | 5.73 | 2.42 | |
| 25 | 2/11/1973 | 1/7/1900 | 4.611 | 5.97 | 2.32 | |
| 26 | 1/14/1993 | 1/5/1900 | 4.43 | 6.21 | 2.23 | |
| 27 | 2/12/1992 | 1/21/1900 | 4.354 | 6.44 | 2.15 | |
| 28 | 1/18/1955 | 1/4/1900 | 4.344 | 6.68 | 2.07 | |
| 29 | 2/15/1992 | 1/8/1900 | 4.335 | 6.92 | 2 | |
| 30 | 6/1/1996 | 1/1/1900 | 4.177 | 7.16 | 1.93 | |
| 31 | 2/23/1969 | 2/15/1900 | 4.136 | 7.4 | 1.87 | |
| 32 | 3/24/1983 | 1/5/1900 | 4.113 | 7.64 | 1.81 | |
| 33 | 11/22/1965 | 1/21/1900 | 4.103 | 7.88 | 1.76 | |
| 34 | 12/5/1966 | 2/16/1900 | 4.078 | 8.11 | 1.71 | |
| 35 | 11/30/2007 | 1/17/1900 | 4.022 | 8.35 | 1.66 | |
| 36 | 2/13/1980 | 2/16/1900 | 4.013 | 8.59 | 1.61 | |
| 37 | 3/11/1995 | 1/23/1900 | 3.869 | 8.83 | 1.57 | |
| 38 | 12/6/1997 | 1/7/1900 | 3.852 | 9.07 | 1.53 | |
| 39 | 1/15/1979 | 1/9/1900 | 3.831 | 9.31 | 1.49 | |
| 40 | 12/29/1965 | 1/3/1900 | 3.788 | 9.55 | 1.45 | |
| 41 | 11/14/1972 | 1/2/1900 | 3.74 | 9.79 | 1.41 | |
| 42 | 1/29/1981 | 1/3/1900 | 3.647 | 10.02 | 1.38 | |
| 43 | 4/1/1982 | 1/4/1900 | 3.599 | 10.26 | 1.35 | |
| 44 | 2/6/1969 | 1/8/1900 | 3.561 | 10.5 | 1.32 | |
| 45 | 1/15/1993 | 3/16/1900 | 3.553 | 10.74 | 1.29 | |
| 46 | 12/18/1967 | 1/22/1900 | 3.497 | 10.98 | 1.26 | |
| 47 | 2/8/1993 | 1/10/1900 | 3.455 | 11.22 | 1.23 | |
| 48 | 2/14/1986 | 1/8/1900 | 3.391 | 11.46 | 1.21 | |
| 49 | 1/24/1969 | 2/27/1900 | 3.389 | 11.69 | 1.18 | |
| 50 | 2/26/1983 | 5/1/1900 | 3.371 | 11.93 | 1.16 | |
| 51 | 1/29/1983 | 1/4/1900 | 3.355 | 12.17 | 1.14 | |
| 52 | 1/21/1964 | 1/24/1900 | 3.355 | 12.41 | 1.12 | |
| 53 | 1/11/2001 | 1/8/1900 | 3.346 | 12.65 | 1.09 | |
| 54 | 1/14/1978 | 1/15/1900 | 3.294 | 12.89 | 1.07 | |
| 55 | 11/15/1952 | 1/19/1900 | 3.291 | 13.13 | 1.05 | |
| 56 | 10/19/2004 | 1/22/1900 | 3.266 | 13.37 | 1.04 | |

**10-year Q:** 6.797 cfs
**5-year Q:** 5.267 cfs
**2-year Q:** 4.335 cfs

**Lower Flow Threshold:** 10%

0.1xQ2 : 0.434 cfs

| | | | | | |
|---|---|---|---|---|---|
| 57 | 1/18/1973 | 1/4/1900 | 3.261 | 13.6 | 1.02 |
| 58 | 1/5/1977 | 2/3/1900 | 3.259 | 13.84 | 1 |
| 59 | 1/9/2005 | 2/22/1900 | 3.246 | 14.08 | 0.98 |
| 60 | 3/8/1968 | 1/9/1900 | 3.204 | 14.32 | 0.97 |
| 61 | 2/21/2005 | 2/27/1900 | 3.188 | 14.56 | 0.95 |
| 62 | 2/28/1970 | 2/9/1900 | 3.17 | 14.8 | 0.94 |
| 63 | 3/15/1952 | 1/11/1900 | 3.161 | 15.04 | 0.92 |
| 64 | 2/7/1994 | 1/17/1900 | 3.155 | 15.27 | 0.91 |
| 65 | 1/22/1967 | 1/9/1900 | 3.142 | 15.51 | 0.89 |
| 66 | 1/5/1979 | 1/26/1900 | 3.13 | 15.75 | 0.88 |
| 67 | 2/18/2005 | 1/31/1900 | 3.086 | 15.99 | 0.87 |
| 68 | 11/20/1963 | 1/22/1900 | 3.026 | 16.23 | 0.85 |
| 69 | 9/17/1963 | 1/3/1900 | 3.001 | 16.47 | 0.84 |
| 70 | 1/13/1957 | 1/6/1900 | 2.998 | 16.71 | 0.83 |
| 71 | 11/30/1982 | 1/8/1900 | 2.981 | 16.95 | 0.82 |
| 72 | 3/25/1991 | 2/17/1900 | 2.925 | 17.18 | 0.81 |
| 73 | 2/28/1957 | 1/18/1900 | 2.923 | 17.42 | 0.79 |
| 74 | 1/16/1973 | 1/4/1900 | 2.918 | 17.66 | 0.78 |
| 75 | 4/11/1967 | 1/4/1900 | 2.833 | 17.9 | 0.77 |
| 76 | 1/27/2008 | 2/1/1900 | 2.819 | 18.14 | 0.76 |
| 77 | 3/15/1958 | 1/17/1900 | 2.816 | 18.38 | 0.75 |
| 78 | 3/10/1986 | 1/14/1900 | 2.812 | 18.62 | 0.74 |
| 79 | 1/6/1993 | 2/14/1900 | 2.81 | 18.85 | 0.73 |
| 80 | 12/2/1961 | 1/13/1900 | 2.807 | 19.09 | 0.73 |
| 81 | 1/12/1960 | 1/7/1900 | 2.739 | 19.33 | 0.72 |
| 82 | 11/19/1967 | 1/21/1900 | 2.651 | 19.57 | 0.71 |
| 83 | 3/11/2006 | 1/2/1900 | 2.651 | 19.81 | 0.7 |
| 84 | 10/25/1951 | 1/5/1900 | 2.646 | 20.05 | 0.69 |
| 85 | 2/27/1991 | 2/19/1900 | 2.637 | 20.29 | 0.68 |
| 86 | 2/7/1998 | 1/27/1900 | 2.61 | 20.53 | 0.67 |
| 87 | 2/3/1998 | 1/10/1900 | 2.605 | 20.76 | 0.67 |
| 88 | 11/29/1970 | 1/14/1900 | 2.577 | 21 | 0.66 |
| 89 | 1/20/1962 | 1/9/1900 | 2.559 | 21.24 | 0.65 |
| 90 | 11/18/1986 | 1/4/1900 | 2.557 | 21.48 | 0.64 |
| 91 | 12/18/1984 | 1/31/1900 | 2.542 | 21.72 | 0.64 |
| 92 | 12/28/2004 | 1/24/1900 | 2.541 | 21.96 | 0.63 |
| 93 | 12/24/1971 | 2/9/1900 | 2.534 | 22.2 | 0.62 |
| 94 | 11/29/1985 | 1/8/1900 | 2.493 | 22.43 | 0.62 |
| 95 | 1/6/1987 | 1/2/1900 | 2.491 | 22.67 | 0.61 |
| 96 | 12/21/1970 | 1/6/1900 | 2.48 | 22.91 | 0.6 |
| 97 | 1/20/1969 | 2/1/1900 | 2.457 | 23.15 | 0.6 |
| 98 | 2/28/1978 | 3/3/1900 | 2.45 | 23.39 | 0.59 |
| 99 | 10/18/2004 | 1/1/1900 | 2.436 | 23.63 | 0.59 |
| 100 | 2/1/1960 | 1/4/1900 | 2.38 | 23.87 | 0.58 |
| 101 | 1/4/1974 | 1/8/1900 | 2.302 | 24.11 | 0.57 |
| 102 | 1/26/1956 | 2/2/1900 | 2.28 | 24.34 | 0.57 |
| 103 | 3/18/1973 | 1/13/1900 | 2.251 | 24.58 | 0.56 |
| 104 | 5/8/1977 | 1/9/1900 | 2.222 | 24.82 | 0.56 |
| 105 | 12/27/1984 | 1/16/1900 | 2.212 | 25.06 | 0.55 |
| 106 | 3/17/1963 | 1/2/1900 | 2.205 | 25.3 | 0.55 |
| 107 | 3/4/2000 | 1/28/1900 | 2.201 | 25.54 | 0.54 |
| 108 | 12/7/1992 | 1/6/1900 | 2.184 | 25.78 | 0.54 |
| 109 | 12/4/1987 | 1/2/1900 | 2.17 | 26.01 | 0.53 |
| 110 | 4/28/2005 | 1/4/1900 | 2.134 | 26.25 | 0.53 |
| 111 | 3/13/1996 | 1/3/1900 | 2.062 | 26.49 | 0.52 |
| 112 | 1/26/1995 | 1/2/1900 | 2.046 | 26.73 | 0.52 |
| 113 | 12/4/1974 | 1/3/1900 | 2.029 | 26.97 | 0.51 |
| 114 | 1/6/2008 | 1/6/1900 | 2.026 | 27.21 | 0.51 |
| 115 | 3/21/1983 | 1/1/1900 | 2.017 | 27.45 | 0.5 |
| 116 | 11/13/1978 | 1/1/1900 | 2.009 | 27.68 | 0.5 |
| 117 | 11/20/1961 | 1/1/1900 | 1.997 | 27.92 | 0.5 |
| 118 | 2/7/1973 | 1/2/1900 | 1.986 | 28.16 | 0.49 |
| 119 | 4/10/1952 | 1/8/1900 | 1.986 | 28.4 | 0.49 |
| 120 | 12/22/1982 | 1/4/1900 | 1.971 | 28.64 | 0.48 |

**Pre Condition POC 3G**

| Statistics - Rank | Event Duration Start | Node Event Peak Date | 3GOUT Exceedance Frequency (hours) | Total Return Period (CFS) | Inflow (percent) | (years) |
|---|---|---|---|---|---|---|
| 1 | 1/1/1982 | 3 | 2.72 | 0.5 | 58 | |
| 2 | 1/16/1978 | 4 | 2.716 | 1 | 29 | |
| 3 | 10/1/1983 | 10 | 2.28 | 1.5 | 19.33 | |
| 4 | 1/10/1978 | 2 | 1.852 | 2 | 14.5 | |
| 5 | 1/4/1995 | 6 | 1.679 | 2.5 | 11.6 | |
| 6 | 4/5/1967 | 1 | 1.676 | 3 | 9.67 | |
| 7 | 1/20/1982 | 5 | 1.624 | 3.5 | 8.29 | |
| 8 | 2/10/1978 | 3 | 1.416 | 4 | 7.25 | |
| 9 | 3/5/1995 | 22 | 1.414 | 4.5 | 6.44 | |
| 10 | 3/15/1986 | 10 | 1.413 | 5 | 5.8 | |
| 11 | 2/10/1963 | 1 | 1.34 | 5.5 | 5.27 | |
| 12 | 2/11/1959 | 2 | 1.291 | 6 | 4.83 | |
| 13 | 1/4/1978 | 9 | 1.202 | 6.5 | 4.46 | |
| 14 | 1/9/1980 | 49 | 1.2 | 7 | 4.14 | |
| 15 | 2/17/1980 | 35 | 1.199 | 7.5 | 3.87 | |
| 16 | 2/16/1980 | 2 | 1.199 | 8 | 3.63 | |
| 17 | 2/20/1980 | 3 | 1.197 | 8.5 | 3.41 | |
| 18 | 3/17/1982 | 14 | 1.196 | 9 | 3.22 | |
| 19 | 9/10/1976 | 2 | 1.193 | 9.5 | 3.05 | |
| 20 | 2/22/1998 | 39 | 1.183 | 10 | 2.9 | |
| 21 | 1/28/1980 | 9 | 1.116 | 10.5 | 2.76 | |
| 22 | 11/24/1983 | 1 | 1.108 | 11 | 2.64 | |
| 23 | 1/14/1993 | 1 | 1.07 | 11.5 | 2.52 | |
| 24 | 2/12/1992 | 21 | 1.068 | 12 | 2.42 | |
| 25 | 2/12/1978 | 1 | 1.055 | 12.5 | 2.32 | |
| 26 | 2/11/1973 | 1 | 1.037 | 13 | 2.23 | |
| 27 | 1/18/1955 | 2 | 1.015 | 13.5 | 2.15 | |
| 28 | 12/5/1966 | 45 | 0.985 | 14 | 2.07 | |
| 29 | 2/25/1969 | 5 | 0.983 | 14.5 | 2 | |
| 30 | 11/22/1965 | 18 | 0.982 | 15 | 1.93 | |
| 31 | 3/24/1983 | 1 | 0.98 | 15.5 | 1.87 | |
| 32 | 1/9/1998 | 1 | 0.972 | 16 | 1.81 | |
| 33 | 11/15/1952 | 17 | 0.936 | 16.5 | 1.76 | |
| 34 | 2/15/1992 | 1 | 0.922 | 17 | 1.71 | |
| 35 | 12/29/1965 | 1 | 0.915 | 17.5 | 1.66 | |
| 36 | 6/10/1990 | 1 | 0.876 | 18 | 1.61 | |
| 37 | 2/22/2004 | 1 | 0.873 | 18.5 | 1.57 | |
| 38 | 2/8/1993 | 10 | 0.865 | 19 | 1.53 | |
| 39 | 1/15/1979 | 2 | 0.863 | 19.5 | 1.49 | |
| 40 | 2/14/1980 | 24 | 0.855 | 20 | 1.45 | |
| 41 | 11/30/2007 | 1 | 0.845 | 20.5 | 1.41 | |
| 42 | 1/15/1993 | 31 | 0.812 | 21 | 1.38 | |
| 43 | 3/11/1995 | 1 | 0.807 | 21.5 | 1.35 | |
| 44 | 1/29/1981 | 1 | 0.803 | 22 | 1.32 | |
| 45 | 10/19/2004 | 20 | 0.799 | 22.5 | 1.29 | |
| 46 | 1/22/1964 | 3 | 0.79 | 23 | 1.26 | |
| 47 | 2/15/1986 | 6 | 0.777 | 23.5 | 1.23 | |
| 48 | 11/14/1972 | 1 | 0.772 | 24 | 1.21 | |
| 49 | 1/25/1969 | 8 | 0.768 | 24.5 | 1.18 | |
| 51 | 1/18/1973 | 3 | 0.768 | 25.5 | 1.14 | |
| 51 | 1/29/1983 | 4 | 0.768 | 25.5 | 1.14 | |
| 52 | 1/5/1977 | 5 | 0.768 | 26 | 1.12 | |
| 53 | 2/27/1983 | 14 | 0.767 | 26.5 | 1.09 | |
| 54 | 3/8/1968 | 5 | 0.764 | 27 | 1.07 | |
| 55 | 3/1/1970 | 19 | 0.762 | 27.5 | 1.05 | |
| 57 | 11/18/1986 | 4 | 0.76 | 28.5 | 1.02 | |
| 57 | 11/30/1982 | 8 | 0.76 | 28.5 | 1.02 | |
| 58 | 10/25/1951 | 5 | 0.756 | 29 | 1 | |
| 59 | 1/11/2001 | 3 | 0.726 | 29.5 | 0.98 | |
| 60 | 1/11/2005 | 6 | 0.725 | 30 | 0.97 | |
| 61 | 2/7/1994 | 1 | 0.721 | 30.5 | 0.95 | |

**10-year Q:** 1.677 cfs
**5-year Q:** 1.310 cfs
**2-year Q:** 0.983 cfs

**Lower Flow Threshold:** 10%

0.1xQ2 : 0.098 cfs

| | | | | | |
|---|---|---|---|---|---|
| 62 | 1/9/2005 | 18 | 0.719 | 31 | 0.94 |
| 63 | 1/14/1978 | 6 | 0.717 | 31.5 | 0.92 |
| 64 | 2/19/2005 | 1 | 0.715 | 32 | 0.91 |
| 65 | 10/18/2004 | 1 | 0.711 | 32.5 | 0.89 |
| 66 | 2/21/2005 | 49 | 0.692 | 33 | 0.88 |
| 67 | 3/15/1952 | 1 | 0.682 | 33.5 | 0.87 |
| 68 | 11/21/1963 | 2 | 0.68 | 34 | 0.85 |
| 69 | 12/6/1997 | 7 | 0.651 | 34.5 | 0.84 |
| 70 | 4/1/1982 | 1 | 0.646 | 35 | 0.83 |
| 71 | 6/1/1996 | 1 | 0.639 | 35.5 | 0.82 |
| 72 | 3/26/1991 | 7 | 0.634 | 36 | 0.81 |
| 73 | 1/6/1993 | 20 | 0.633 | 36.5 | 0.79 |
| 74 | 2/6/1969 | 7 | 0.632 | 37 | 0.78 |
| 76 | 3/1/1991 | 18 | 0.624 | 38 | 0.76 |
| 76 | 2/28/1957 | 1 | 0.624 | 38 | 0.76 |
| 77 | 3/10/1986 | 1 | 0.622 | 38.5 | 0.75 |
| 78 | 3/1/1983 | 3 | 0.606 | 39 | 0.74 |
| 79 | 3/16/1958 | 4 | 0.599 | 39.5 | 0.73 |
| 80 | 3/11/2006 | 1 | 0.595 | 40 | 0.73 |
| 81 | 1/12/1960 | 4 | 0.573 | 40.5 | 0.72 |
| 82 | 1/27/2008 | 32 | 0.571 | 41 | 0.71 |
| 83 | 2/1/1960 | 2 | 0.562 | 41.5 | 0.7 |
| 84 | 2/8/1998 | 5 | 0.55 | 42 | 0.69 |
| 85 | 11/29/1985 | 6 | 0.549 | 42.5 | 0.68 |
| 86 | 11/29/1970 | 5 | 0.541 | 43 | 0.67 |
| 87 | 1/13/1957 | 3 | 0.541 | 43.5 | 0.67 |
| 88 | 12/18/1984 | 20 | 0.532 | 44 | 0.66 |
| 89 | 1/7/1987 | 1 | 0.528 | 44.5 | 0.65 |
| 90 | 3/1/1978 | 12 | 0.526 | 45 | 0.64 |
| 91 | 12/21/1970 | 4 | 0.523 | 45.5 | 0.64 |
| 92 | 1/22/1967 | 1 | 0.516 | 46 | 0.63 |
| 93 | 1/6/1979 | 1 | 0.512 | 46.5 | 0.62 |
| 94 | 12/2/1961 | 2 | 0.507 | 47 | 0.62 |
| 95 | 12/24/1971 | 3 | 0.496 | 47.5 | 0.61 |
| 96 | 1/26/1956 | 8 | 0.485 | 48 | 0.6 |
| 97 | 1/16/1973 | 1 | 0.483 | 48.5 | 0.6 |
| 98 | 12/27/1984 | 1 | 0.463 | 49 | 0.59 |
| 99 | 12/25/2003 | 2 | 0.456 | 49.5 | 0.59 |
| 100 | 4/11/1967 | 1 | 0.445 | 50 | 0.58 |

**Pre Condition POC 3H**

Statistics - Node POC Total Inflow

| Rank | Start Date | Event Duration (hours) | Event Peak (CFS) | Exceedance Frequency (percent) | Return Period (years) | (years) |
|---|---|---|---|---|---|---|
| 1 | 1/16/1978 | 8 | 27.714 | 0.33 | 58 | |
| 2 | 1/1/1982 | 26 | 26.401 | 0.66 | 29 | |
| 3 | 10/1/1983 | 12 | 19.693 | 0.99 | 19.33 | |
| 4 | 1/9/1978 | 16 | 18.386 | 1.32 | 14.5 | |
| 5 | 1/4/1995 | 9 | 17.716 | 1.65 | 11.6 | |
| 6 | 1/20/1982 | 7 | 13.795 | 1.98 | 9.67 | |
| 7 | 4/5/1967 | 2 | 13.002 | 2.31 | 8.29 | |
| 8 | 3/5/1995 | 24 | 12.83 | 2.64 | 7.25 | |
| 9 | 1/4/1978 | 21 | 12.414 | 2.97 | 6.44 | |
| 10 | 2/22/1998 | 49 | 11.545 | 3.3 | 5.8 | |
| 11 | 2/11/1959 | 4 | 11.416 | 3.63 | 5.27 | |
| 12 | 1/28/1980 | 12 | 11.365 | 3.96 | 4.83 | |
| 13 | 9/10/1976 | 13 | 11.291 | 4.29 | 4.46 | |
| 14 | 12/5/1966 | 48 | 11.026 | 4.62 | 4.14 | |
| 15 | 2/7/1978 | 73 | 11.011 | 4.95 | 3.87 | |
| 16 | 2/16/1980 | 104 | 11.001 | 5.28 | 3.63 | |
| 17 | 3/15/1986 | 12 | 10.993 | 5.61 | 3.41 | |
| 18 | 2/10/1963 | 18 | 10.595 | 5.94 | 3.22 | |
| 19 | 11/24/1983 | 3 | 9.987 | 6.27 | 3.05 | |
| 20 | 2/25/1969 | 15 | 9.023 | 6.6 | 2.9 | |
| 21 | 1/11/2001 | 8 | 9.011 | 6.93 | 2.76 | |
| 22 | 11/22/1965 | 21 | 8.947 | 7.26 | 2.64 | |
| 23 | 3/17/1982 | 16 | 8.901 | 7.59 | 2.52 | |
| 24 | 1/9/1980 | 58 | 8.883 | 7.92 | 2.42 | |
| 25 | 1/9/1998 | 4 | 8.752 | 8.25 | 2.32 | |
| 26 | 1/18/1955 | 4 | 8.682 | 8.58 | 2.23 | |
| 27 | 1/24/1969 | 28 | 8.271 | 8.91 | 2.15 | |
| 28 | 2/11/1973 | 7 | 8.217 | 9.24 | 2.07 | |
| 29 | 1/14/1993 | 3 | 8.133 | 9.57 | 2 | |
| 30 | 3/8/1968 | 9 | 8.052 | 9.9 | 1.93 | |
| 31 | 2/15/1992 | 4 | 8.029 | 10.23 | 1.87 | |
| 32 | 2/14/1986 | 9 | 7.976 | 10.56 | 1.81 | |
| 33 | 3/24/1983 | 3 | 7.962 | 10.89 | 1.76 | |
| 34 | 2/12/1978 | 4 | 7.831 | 11.22 | 1.71 | |
| 35 | 1/15/1979 | 4 | 7.72 | 11.55 | 1.66 | |
| 36 | 2/12/1992 | 21 | 7.689 | 11.88 | 1.61 | |
| 37 | 1/15/1993 | 34 | 7.664 | 12.21 | 1.57 | |
| 38 | 2/22/2004 | 2 | 7.636 | 12.54 | 1.53 | |
| 39 | 2/27/1983 | 14 | 7.505 | 12.87 | 1.49 | |
| 40 | 1/16/1973 | 5 | 7.375 | 13.2 | 1.45 | |
| 41 | 2/8/1993 | 10 | 7.222 | 13.53 | 1.41 | |
| 42 | 1/14/1978 | 9 | 7.206 | 13.86 | 1.38 | |
| 43 | 1/22/1964 | 4 | 7.025 | 14.19 | 1.35 | |
| 44 | 3/11/1995 | 3 | 7.002 | 14.52 | 1.32 | |
| 45 | 1/11/2005 | 7 | 6.96 | 14.85 | 1.29 | |
| 47 | 1/29/1983 | 5 | 6.908 | 15.51 | 1.23 | |
| 47 | 1/18/1973 | 4 | 6.908 | 15.51 | 1.23 | |
| 48 | 12/29/1965 | 3 | 6.893 | 15.84 | 1.21 | |
| 49 | 1/5/1977 | 34 | 6.771 | 16.17 | 1.18 | |
| 50 | 2/6/1969 | 9 | 6.758 | 16.5 | 1.16 | |

**10-year Q:** 14.465
**5-year Q:** 11.385
**2-year Q:** 8.133

**Lower Flow Threshold:** 50%

0.5xQ2 : 4.067

| | | | | | |
|---|---|---|---|---|---|
| 51 | 11/14/1952 | 41 | 6.699 | 16.83 | 1.14 |
| 52 | 2/14/1980 | 24 | 6.645 | 17.16 | 1.12 |
| 53 | 3/26/1991 | 8 | 6.488 | 17.49 | 1.09 |
| 54 | 6/10/1990 | 2 | 6.346 | 17.82 | 1.07 |
| 55 | 11/14/1972 | 2 | 6.214 | 18.15 | 1.05 |
| 56 | 11/30/1982 | 9 | 6.189 | 18.48 | 1.04 |
| 57 | 11/29/1970 | 6 | 6.049 | 18.81 | 1.02 |
| 58 | 2/28/1970 | 37 | 6.041 | 19.14 | 1 |
| 59 | 11/30/2007 | 7 | 5.922 | 19.47 | 0.98 |
| 60 | 1/12/1960 | 6 | 5.892 | 19.8 | 0.97 |
| 61 | 1/9/2005 | 19 | 5.839 | 20.13 | 0.95 |
| 62 | 12/4/1974 | 5 | 5.832 | 20.46 | 0.94 |
| 63 | 2/21/2005 | 51 | 5.697 | 20.79 | 0.92 |
| 64 | 2/8/1998 | 7 | 5.685 | 21.12 | 0.91 |
| 65 | 3/15/1952 | 8 | 5.666 | 21.45 | 0.89 |
| 66 | 12/24/1971 | 40 | 5.63 | 21.78 | 0.88 |
| 67 | 2/7/1994 | 3 | 5.61 | 22.11 | 0.87 |
| 68 | 1/29/1981 | 3 | 5.453 | 22.44 | 0.85 |
| 69 | 1/6/1993 | 21 | 5.418 | 22.77 | 0.84 |
| 70 | 10/19/2004 | 22 | 5.275 | 23.1 | 0.83 |
| 71 | 3/1/1983 | 46 | 5.191 | 23.43 | 0.82 |
| 72 | 12/18/1967 | 3 | 5.129 | 23.76 | 0.81 |
| 73 | 11/29/1985 | 7 | 5.041 | 24.09 | 0.79 |
| 74 | 11/18/1986 | 6 | 4.923 | 24.42 | 0.78 |
| 75 | 11/21/1963 | 3 | 4.65 | 24.75 | 0.77 |
| 76 | 10/18/2004 | 2 | 4.523 | 25.08 | 0.76 |
| 77 | 1/13/1957 | 4 | 4.516 | 25.41 | 0.75 |
| 78 | 1/6/1987 | 3 | 4.51 | 25.74 | 0.74 |
| 79 | 1/27/2008 | 32 | 4.409 | 26.07 | 0.73 |
| 80 | 3/1/1991 | 19 | 4.352 | 26.4 | 0.73 |
| 81 | 12/25/2003 | 3 | 4.311 | 26.73 | 0.72 |
| 82 | 2/27/1978 | 44 | 4.286 | 27.06 | 0.71 |
| 83 | 4/1/1982 | 2 | 4.214 | 27.39 | 0.7 |
| 84 | 12/6/1997 | 7 | 4.197 | 27.72 | 0.69 |
| 85 | 2/19/2005 | 2 | 4.127 | 28.05 | 0.68 |
| 86 | 4/3/1958 | 5 | 4.073 | 28.38 | 0.67 |
| 87 | 12/2/1961 | 10 | 4.028 | 28.71 | 0.67 |
| 88 | 1/20/1962 | 5 | 4.003 | 29.04 | 0.66 |
| 89 | 4/11/1967 | 3 | 3.954 | 29.37 | 0.65 |
| 90 | 12/27/1984 | 16 | 3.938 | 29.7 | 0.64 |
| 92 | 12/22/1971 | 9 | 3.845 | 30.36 | 0.63 |
| 92 | 1/12/1997 | 17 | 3.845 | 30.36 | 0.63 |
| 93 | 3/10/1986 | 2 | 3.783 | 30.69 | 0.62 |
| 94 | 10/25/1951 | 5 | 3.735 | 31.02 | 0.62 |
| 95 | 12/24/1988 | 5 | 3.667 | 31.35 | 0.61 |
| 96 | 3/15/1958 | 17 | 3.601 | 31.68 | 0.6 |
| 97 | 1/16/1952 | 9 | 3.572 | 32.01 | 0.6 |
| 98 | 3/23/1964 | 3 | 3.455 | 32.34 | 0.59 |
| 99 | 3/11/2006 | 2 | 3.447 | 32.67 | 0.59 |
| 100 | 2/6/1978 | 4 | 3.373 | 33 | 0.58 |

**Pre Condition POC 3J**

| Statistics Rank | - Event Duration Start | Node Event Peak Date | 3J Exceedance Frequency (hours) | Total Return Period (CFS) | Inflow (percent) | (years) |
|---|---|---|---|---|---|---|
| 1 | 1/16/1978 | 9 | 6.817 | 0.16 | 58 | |
| 2 | 1/1/1982 | 28 | 6.75 | 0.31 | 29 | |
| 3 | 10/1/1983 | 11 | 5.656 | 0.47 | 19.33 | |
| 4 | 1/9/1978 | 34 | 4.838 | 0.62 | 14.5 | |
| 5 | 1/20/1982 | 34 | 4.812 | 0.78 | 11.6 | |
| 6 | 4/4/1967 | 25 | 4.723 | 0.93 | 9.67 | |
| 7 | 1/3/1995 | 40 | 4.425 | 1.09 | 8.29 | |
| 8 | 2/9/1963 | 38 | 4.125 | 1.24 | 7.25 | |
| 9 | 2/7/1978 | 80 | 3.82 | 1.4 | 6.44 | |
| 10 | 3/15/1986 | 29 | 3.792 | 1.55 | 5.8 | |
| 11 | 3/5/1995 | 26 | 3.778 | 1.71 | 5.27 | |
| 12 | 2/11/1959 | 26 | 3.64 | 1.86 | 4.83 | |
| 13 | 6/1/1996 | 1 | 3.624 | 2.02 | 4.46 | |
| 14 | 6/9/1990 | 19 | 3.597 | 2.17 | 4.14 | |
| 15 | 2/22/2004 | 26 | 3.597 | 2.33 | 3.87 | |
| 16 | 2/22/1998 | 50 | 3.369 | 2.48 | 3.63 | |
| 17 | 2/13/1980 | 188 | 3.348 | 2.64 | 3.41 | |
| 18 | 1/4/1978 | 52 | 3.343 | 2.8 | 3.22 | |
| 19 | 1/8/1980 | 143 | 3.333 | 2.95 | 3.05 | |
| 20 | 2/12/1978 | 19 | 3.332 | 3.11 | 2.9 | |
| 21 | 1/28/1980 | 41 | 3.328 | 3.26 | 2.76 | |
| 22 | 1/9/1998 | 21 | 3.326 | 3.42 | 2.64 | |
| 23 | 9/10/1976 | 26 | 3.303 | 3.57 | 2.52 | |
| 24 | 11/24/1983 | 3 | 3.276 | 3.73 | 2.42 | |
| 25 | 2/11/1973 | 45 | 3.264 | 3.88 | 2.32 | |
| 26 | 3/17/1982 | 24 | 3.259 | 4.04 | 2.23 | |
| 27 | 12/6/1997 | 40 | 3.25 | 4.19 | 2.15 | |
| 28 | 1/18/1955 | 7 | 3.122 | 4.35 | 2.07 | |
| 29 | 2/15/1992 | 9 | 3.062 | 4.5 | 2 | |
| 30 | 1/12/1993 | 37 | 3.048 | 4.66 | 1.93 | |
| 31 | 2/12/1992 | 22 | 2.98 | 4.81 | 1.87 | |
| 32 | 9/17/1963 | 44 | 2.946 | 4.97 | 1.81 | |
| 33 | 11/30/2007 | 18 | 2.924 | 5.12 | 1.76 | |
| 34 | 2/23/1969 | 51 | 2.868 | 5.28 | 1.71 | |
| 35 | 12/5/1966 | 49 | 2.853 | 5.43 | 1.66 | |
| 36 | 3/24/1983 | 17 | 2.846 | 5.59 | 1.61 | |
| 37 | 11/22/1965 | 25 | 2.841 | 5.75 | 1.57 | |
| 38 | 12/29/1965 | 16 | 2.812 | 5.9 | 1.53 | |
| 39 | 3/11/1995 | 24 | 2.808 | 6.06 | 1.49 | |
| 40 | 12/18/1967 | 25 | 2.803 | 6.21 | 1.45 | |
| 41 | 1/15/1979 | 10 | 2.8 | 6.37 | 1.41 | |
| 42 | 2/6/1969 | 12 | 2.797 | 6.52 | 1.38 | |
| 43 | 11/14/1972 | 4 | 2.773 | 6.68 | 1.35 | |
| 44 | 1/29/1981 | 5 | 2.758 | 6.83 | 1.32 | |
| 45 | 4/1/1982 | 10 | 2.735 | 6.99 | 1.29 | |
| 46 | 1/22/1967 | 13 | 2.716 | 7.14 | 1.26 | |
| 47 | 1/11/2001 | 12 | 2.605 | 7.3 | 1.23 | |
| 48 | 2/8/1993 | 15 | 2.558 | 7.45 | 1.21 | |
| 49 | 11/14/1952 | 42 | 2.504 | 7.61 | 1.18 | |
| 50 | 1/15/1993 | 79 | 2.477 | 7.76 | 1.16 | |
| 51 | 12/28/2004 | 26 | 2.462 | 7.92 | 1.14 | |
| 52 | 2/14/1986 | 14 | 2.435 | 8.07 | 1.12 | |
| 53 | 1/21/1964 | 31 | 2.415 | 8.23 | 1.09 | |
| 54 | 1/24/1969 | 62 | 2.388 | 8.39 | 1.07 | |
| 55 | 2/26/1983 | 124 | 2.371 | 8.54 | 1.05 | |
| 56 | 1/29/1983 | 5 | 2.368 | 8.7 | 1.04 | |
| 57 | 1/14/1978 | 17 | 2.347 | 8.85 | 1.02 | |
| 58 | 1/18/1973 | 9 | 2.345 | 9.01 | 1 | |
| 59 | 1/5/1977 | 35 | 2.33 | 9.16 | 0.98 | |

**10-year Q:** 4.738 cfs
**5-year Q:** 3.693 cfs
**2-year Q:** 3.062 cfs

**Lower Flow Threshold:** 10%

0.1xQ2 : 0.306 cfs

| | | | | | |
|---|---|---|---|---|---|
| 60 | 10/19/2004 | 26 | 2.329 | 9.32 | 0.97 |
| 61 | 3/7/1968 | 16 | 2.328 | 9.47 | 0.95 |
| 62 | 4/11/1967 | 25 | 2.308 | 9.63 | 0.94 |
| 63 | 1/16/1973 | 6 | 2.303 | 9.78 | 0.92 |
| 64 | 12/4/1987 | 2 | 2.299 | 9.94 | 0.91 |
| 65 | 2/28/1970 | 42 | 2.298 | 10.09 | 0.89 |
| 66 | 11/19/1967 | 25 | 2.289 | 10.25 | 0.88 |
| 67 | 1/7/2005 | 94 | 2.284 | 10.4 | 0.87 |
| 68 | 2/3/1998 | 28 | 2.274 | 10.56 | 0.85 |
| 69 | 11/29/1982 | 26 | 2.258 | 10.71 | 0.84 |
| 70 | 1/5/1979 | 27 | 2.249 | 10.87 | 0.83 |
| 71 | 2/20/2005 | 70 | 2.246 | 11.02 | 0.82 |
| 72 | 2/7/1994 | 22 | 2.245 | 11.18 | 0.81 |
| 73 | 3/18/1973 | 15 | 2.234 | 11.34 | 0.79 |
| 74 | 3/15/1952 | 24 | 2.208 | 11.49 | 0.78 |
| 75 | 11/17/1986 | 18 | 2.193 | 11.65 | 0.77 |
| 76 | 2/18/2005 | 34 | 2.192 | 11.8 | 0.76 |
| 77 | 12/2/1961 | 29 | 2.185 | 11.96 | 0.75 |
| 78 | 3/17/1963 | 3 | 2.184 | 12.11 | 0.74 |
| 79 | 11/20/1963 | 24 | 2.174 | 12.27 | 0.73 |
| 80 | 1/13/1957 | 7 | 2.13 | 12.42 | 0.73 |
| 81 | 3/25/1991 | 53 | 2.075 | 12.58 | 0.72 |
| 82 | 2/1/1960 | 7 | 2.068 | 12.73 | 0.71 |
| 83 | 1/6/1993 | 46 | 2.05 | 12.89 | 0.7 |
| 84 | 10/25/1951 | 6 | 2.036 | 13.04 | 0.69 |
| 85 | 1/20/1962 | 10 | 2.014 | 13.2 | 0.68 |
| 86 | 1/28/1981 | 2 | 2.01 | 13.35 | 0.67 |
| 87 | 1/27/2008 | 33 | 2.01 | 13.51 | 0.67 |
| 88 | 2/28/1957 | 19 | 2.001 | 13.66 | 0.66 |
| 89 | 3/10/1986 | 20 | 1.985 | 13.82 | 0.65 |
| 90 | 2/2/2004 | 3 | 1.976 | 13.98 | 0.64 |
| 91 | 3/11/2006 | 7 | 1.972 | 14.13 | 0.64 |
| 92 | 2/27/1991 | 53 | 1.967 | 14.29 | 0.63 |
| 93 | 3/15/1958 | 21 | 1.964 | 14.44 | 0.62 |
| 94 | 10/18/2004 | 2 | 1.938 | 14.6 | 0.62 |
| 95 | 4/28/2005 | 6 | 1.93 | 14.75 | 0.61 |
| 96 | 3/12/1996 | 18 | 1.902 | 14.91 | 0.6 |
| 97 | 2/7/1998 | 28 | 1.897 | 15.06 | 0.6 |
| 98 | 1/12/1960 | 7 | 1.883 | 15.22 | 0.59 |
| 99 | 12/24/1971 | 41 | 1.881 | 15.37 | 0.59 |
| 100 | 11/28/1970 | 33 | 1.878 | 15.53 | 0.58 |
| 101 | 11/13/1984 | 2 | 1.872 | 15.68 | 0.57 |
| 102 | 1/19/1969 | 67 | 1.841 | 15.84 | 0.57 |
| 103 | 2/27/1978 | 65 | 1.834 | 15.99 | 0.56 |
| 104 | 11/29/1985 | 18 | 1.832 | 16.15 | 0.56 |
| 105 | 3/20/1992 | 16 | 1.82 | 16.3 | 0.55 |
| 106 | 11/20/1961 | 3 | 1.805 | 16.46 | 0.55 |
| 107 | 12/18/1984 | 40 | 1.797 | 16.61 | 0.54 |
| 108 | 12/21/1970 | 25 | 1.795 | 16.77 | 0.54 |
| 109 | 12/4/1972 | 6 | 1.794 | 16.93 | 0.53 |
| 110 | 1/4/1974 | 18 | 1.788 | 17.08 | 0.53 |
| 111 | 1/6/1987 | 13 | 1.786 | 17.24 | 0.52 |
| 112 | 11/13/1978 | 3 | 1.779 | 17.39 | 0.52 |
| 113 | 10/27/2004 | 34 | 1.774 | 17.55 | 0.51 |
| 114 | 3/21/1983 | 8 | 1.773 | 17.7 | 0.51 |
| 115 | 12/4/1974 | 13 | 1.772 | 17.86 | 0.5 |
| 116 | 5/7/1977 | 36 | 1.756 | 18.01 | 0.5 |
| 117 | 12/22/1982 | 7 | 1.751 | 18.17 | 0.5 |
| 118 | 12/27/1964 | 25 | 1.705 | 18.32 | 0.49 |
| 119 | 1/25/1956 | 42 | 1.693 | 18.48 | 0.49 |
| 120 | 10/29/2000 | 3 | 1.676 | 18.63 | 0.48 |
| 121 | 12/27/1984 | 20 | 1.669 | 18.79 | 0.48 |
| 122 | 12/25/2003 | 11 | 1.658 | 18.94 | 0.48 |
| 123 | 11/7/1966 | 7 | 1.646 | 19.1 | 0.47 |
| 124 | 1/10/1995 | 51 | 1.636 | 19.25 | 0.47 |
| 125 | 4/10/1952 | 8 | 1.631 | 19.41 | 0.46 |

**Pre Condition EQ Road**

| Statistics - Rank | Event Duration Start | Node Event Peak Date | POC_EQ Exceedance Frequency (hours) | Total Return Period (CFS) | Inflow (percent) | (years) |
|---|---|---|---|---|---|---|
| 1 | 1/16/1978 | 8 | 436.815 | 0.41 | 58 | |
| 2 | 1/1/1982 | 5 | 362.435 | 0.82 | 29 | |
| 3 | 1/4/1995 | 12 | 298.554 | 1.23 | 19.33 | |
| 4 | 1/10/1978 | 4 | 259.547 | 1.64 | 14.5 | |
| 5 | 10/1/1983 | 11 | 212.478 | 2.05 | 11.6 | |
| 6 | 2/16/1980 | 107 | 187.892 | 2.46 | 9.67 | |
| 7 | 3/5/1995 | 25 | 185.966 | 2.87 | 8.29 | |
| 8 | 12/5/1966 | 46 | 173.056 | 3.28 | 7.25 | |
| 9 | 1/4/1978 | 11 | 169.13 | 3.69 | 6.44 | |
| 10 | 2/22/1998 | 45 | 168.406 | 4.1 | 5.8 | |
| 11 | 4/5/1967 | 3 | 165.525 | 4.51 | 5.27 | |
| 12 | 1/28/1980 | 12 | 162.535 | 4.92 | 4.83 | |
| 13 | 1/20/1982 | 8 | 158.061 | 5.33 | 4.46 | |
| 14 | 2/11/1959 | 5 | 146.357 | 5.74 | 4.14 | |
| 15 | 2/10/1963 | 3 | 146.201 | 6.15 | 3.87 | |
| 16 | 3/15/1986 | 13 | 144.098 | 6.56 | 3.63 | |
| 17 | 2/22/2004 | 5 | 143.517 | 6.97 | 3.41 | |
| 18 | 2/25/1969 | 16 | 140.191 | 7.38 | 3.22 | |
| 19 | 1/25/1969 | 41 | 135.329 | 7.79 | 3.05 | |
| 20 | 11/22/1965 | 21 | 133.711 | 8.2 | 2.9 | |
| 21 | 2/10/1978 | 6 | 129.117 | 8.61 | 2.76 | |
| 22 | 2/14/1986 | 9 | 121.722 | 9.02 | 2.64 | |
| 23 | 1/9/1980 | 56 | 119.455 | 9.43 | 2.52 | |
| 24 | 2/15/1992 | 7 | 119.383 | 9.84 | 2.42 | |
| 25 | 1/9/1998 | 5 | 119.167 | 10.25 | 2.32 | |
| 26 | 1/15/1993 | 39 | 118.778 | 10.66 | 2.23 | |
| 27 | 3/11/1995 | 6 | 113.541 | 11.07 | 2.15 | |
| 28 | 1/14/1978 | 8 | 111.236 | 11.48 | 2.07 | |
| 29 | 1/14/1993 | 4 | 104.359 | 11.89 | 2 | |
| 30 | 1/11/2005 | 9 | 103.263 | 12.3 | 1.93 | |
| 31 | 1/6/1993 | 30 | 102.018 | 12.7 | 1.87 | |
| 32 | 2/27/1983 | 14 | 100.9 | 13.11 | 1.81 | |
| 33 | 3/17/1982 | 17 | 99.285 | 13.52 | 1.76 | |
| 34 | 1/9/2005 | 20 | 97.323 | 13.93 | 1.71 | |
| 35 | 11/29/1970 | 7 | 91.489 | 14.34 | 1.66 | |
| 36 | 1/18/1955 | 5 | 90.966 | 14.75 | 1.61 | |
| 37 | 3/26/1991 | 8 | 90.425 | 15.16 | 1.57 | |
| 38 | 2/12/1978 | 4 | 89.296 | 15.57 | 1.53 | |
| 39 | 1/13/1957 | 7 | 89.009 | 15.98 | 1.49 | |
| 40 | 9/10/1976 | 4 | 84.979 | 16.39 | 1.45 | |
| 41 | 2/6/1969 | 8 | 84.923 | 16.8 | 1.41 | |
| 42 | 3/1/1983 | 46 | 81.552 | 17.21 | 1.38 | |
| 43 | 2/11/1973 | 7 | 81.527 | 17.62 | 1.35 | |
| 44 | 2/12/1992 | 22 | 80.457 | 18.03 | 1.32 | |
| 45 | 11/29/1985 | 8 | 80.063 | 18.44 | 1.29 | |
| 46 | 12/24/1971 | 6 | 79.059 | 18.85 | 1.26 | |
| 47 | 3/8/1968 | 4 | 78.84 | 19.26 | 1.23 | |
| 48 | 11/15/1952 | 19 | 78.838 | 19.67 | 1.21 | |
| 49 | 2/8/1998 | 7 | 76.88 | 20.08 | 1.18 | |
| 50 | 10/19/2004 | 24 | 76.852 | 20.49 | 1.16 | |
| 51 | 3/15/1952 | 11 | 76.153 | 20.9 | 1.14 | |
| 52 | 1/12/1960 | 6 | 75.862 | 21.31 | 1.12 | |
| 53 | 1/20/1962 | 6 | 73.018 | 21.72 | 1.09 | |
| 54 | 3/24/1983 | 4 | 72.477 | 22.13 | 1.07 | |
| 55 | 2/7/1994 | 5 | 72.431 | 22.54 | 1.05 | |
| 56 | 1/16/1952 | 10 | 71.47 | 22.95 | 1.04 | |

**10-year Q:** 192.096 cfs
**5-year Q:** 163.690 cfs
**2-year Q:** 104.359 cfs

**Lower Flow Threshold:** 10%

0.1xQ2 : 10.436 cfs

| | | | | | |
|---|---|---|---|---|---|
| 57 | 11/24/1983 | 2 | 70.816 | 23.36 | 1.02 |
| 58 | 2/21/2005 | 51 | 68.595 | 23.77 | 1 |
| 59 | 2/14/1980 | 25 | 68.05 | 24.18 | 0.98 |
| 60 | 11/21/1963 | 3 | 65.91 | 24.59 | 0.97 |
| 61 | 1/22/1964 | 4 | 65.177 | 25 | 0.95 |
| 62 | 11/30/2007 | 7 | 64.586 | 25.41 | 0.94 |
| 63 | 1/29/1983 | 5 | 63.513 | 25.82 | 0.92 |
| 64 | 12/24/1988 | 6 | 62.848 | 26.23 | 0.91 |
| 65 | 4/3/1958 | 5 | 62.756 | 26.64 | 0.89 |
| 66 | 1/29/1981 | 4 | 61.3 | 27.05 | 0.88 |
| 67 | 1/11/2001 | 5 | 61.264 | 27.46 | 0.87 |
| 68 | 3/1/1991 | 19 | 61.077 | 27.87 | 0.85 |
| 69 | 3/22/1964 | 5 | 59.867 | 28.28 | 0.84 |
| 70 | 1/18/1973 | 4 | 59.562 | 28.69 | 0.83 |
| 71 | 6/10/1990 | 2 | 57.89 | 29.1 | 0.82 |
| 72 | 12/18/1967 | 5 | 56.53 | 29.51 | 0.81 |
| 73 | 2/8/1993 | 10 | 56.322 | 29.92 | 0.79 |
| 74 | 3/1/1978 | 12 | 54.866 | 30.33 | 0.78 |
| 75 | 12/6/1997 | 8 | 54.279 | 30.74 | 0.77 |
| 76 | 2/26/2004 | 7 | 53.79 | 31.15 | 0.76 |
| 77 | 1/26/1997 | 7 | 51.839 | 31.56 | 0.75 |
| 78 | 1/28/1957 | 32 | 51.175 | 31.97 | 0.74 |
| 79 | 3/15/1958 | 18 | 50.652 | 32.38 | 0.73 |
| 80 | 1/6/1977 | 19 | 50.137 | 32.79 | 0.73 |
| 81 | 11/14/1972 | 2 | 48.005 | 33.2 | 0.72 |
| 82 | 2/1/1960 | 3 | 47.778 | 33.61 | 0.71 |
| 83 | 4/1/1982 | 4 | 47.226 | 34.02 | 0.7 |
| 84 | 12/2/1961 | 3 | 46.36 | 34.43 | 0.69 |
| 85 | 2/28/1970 | 36 | 45.918 | 34.84 | 0.68 |
| 86 | 1/6/1974 | 37 | 45.906 | 35.25 | 0.67 |
| 87 | 1/10/1995 | 9 | 45.449 | 35.66 | 0.67 |
| 88 | 1/15/1979 | 3 | 44.903 | 36.07 | 0.66 |
| 89 | 12/29/1951 | 16 | 44.118 | 36.48 | 0.65 |
| 90 | 12/2/1952 | 4 | 43.985 | 36.89 | 0.64 |
| 91 | 2/14/1998 | 4 | 42.821 | 37.3 | 0.64 |
| 92 | 10/18/2004 | 3 | 42.334 | 37.7 | 0.63 |
| 93 | 12/24/1959 | 5 | 42.304 | 38.11 | 0.62 |
| 94 | 4/11/1967 | 2 | 40.603 | 38.52 | 0.62 |
| 95 | 1/7/1987 | 2 | 40.059 | 38.93 | 0.61 |
| 96 | 4/7/1958 | 15 | 40.028 | 39.34 | 0.6 |
| 97 | 1/16/1973 | 2 | 39.913 | 39.75 | 0.6 |
| 98 | 2/19/2005 | 3 | 39.609 | 40.16 | 0.59 |
| 99 | 1/27/2008 | 33 | 39.565 | 40.57 | 0.59 |
| 100 | 3/7/1952 | 7 | 39.543 | 40.98 | 0.58 |
| 101 | 5/8/1977 | 4 | 38.408 | 41.39 | 0.57 |
| 102 | 12/27/1984 | 4 | 38.351 | 41.8 | 0.57 |
| 103 | 11/30/1982 | 8 | 37.665 | 42.21 | 0.56 |
| 104 | 1/6/1979 | 7 | 37.331 | 42.62 | 0.56 |
| 105 | 3/11/2006 | 3 | 36.982 | 43.03 | 0.55 |
| 106 | 12/18/1984 | 22 | 36.869 | 43.44 | 0.55 |
| 107 | 1/26/1956 | 13 | 36.331 | 43.85 | 0.54 |
| 108 | 1/7/2008 | 7 | 36.079 | 44.26 | 0.54 |
| 109 | 2/4/1958 | 7 | 36 | 44.67 | 0.53 |
| 110 | 1/24/1967 | 8 | 35.809 | 45.08 | 0.53 |
| 111 | 2/26/1983 | 2 | 35.531 | 45.49 | 0.52 |
| 112 | 1/18/1954 | 25 | 35.171 | 45.9 | 0.52 |
| 113 | 12/21/1970 | 6 | 34.311 | 46.31 | 0.51 |
| 114 | 12/3/1966 | 5 | 33.693 | 46.72 | 0.51 |
| 115 | 1/18/1993 | 7 | 33.194 | 47.13 | 0.5 |
| 116 | 12/29/1965 | 2 | 33.07 | 47.54 | 0.5 |
| 117 | 1/5/1992 | 9 | 32.913 | 47.95 | 0.5 |
| 118 | 3/13/1967 | 4 | 32.08 | 48.36 | 0.49 |
| 119 | 1/25/1954 | 7 | 31.781 | 48.77 | 0.49 |

# Attachment 6

# Basin Cross Sections

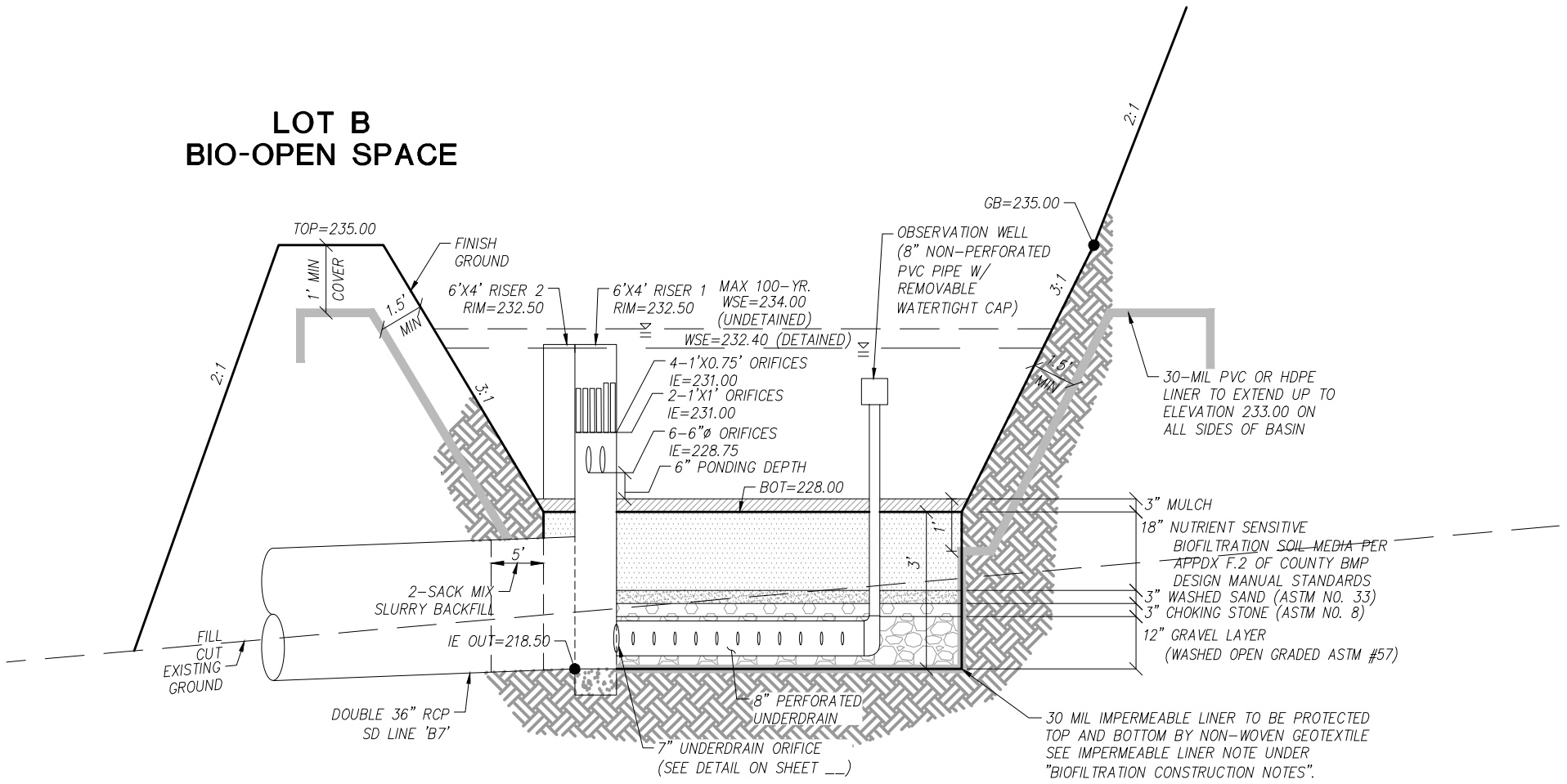


## SECTION 1A-1A: BMP 1A
## LINED BIOFILTRATION (PRIVATE)

NOT TO SCALE

N

| | |
|---|---|
| SCALE: | 1"=60' |
| JOB #: | 4192.10 |
| CREATED: | 5/18/20 |

PREPARED BY:

PROJECT DESIGN CONSULTANTS
Planning | Landscape Architecture | Engineering | Survey
701 B Street, Suite 800
San Diego, CA 92101
619.235.6471 Tel
619.234.0349 Fax

**COUNTY OF SAN DIEGO**

**OCEAN BREEZE RANCH**

***BASIN CROSS SECTIONS***
***EXHIBIT (1 OF 14)***

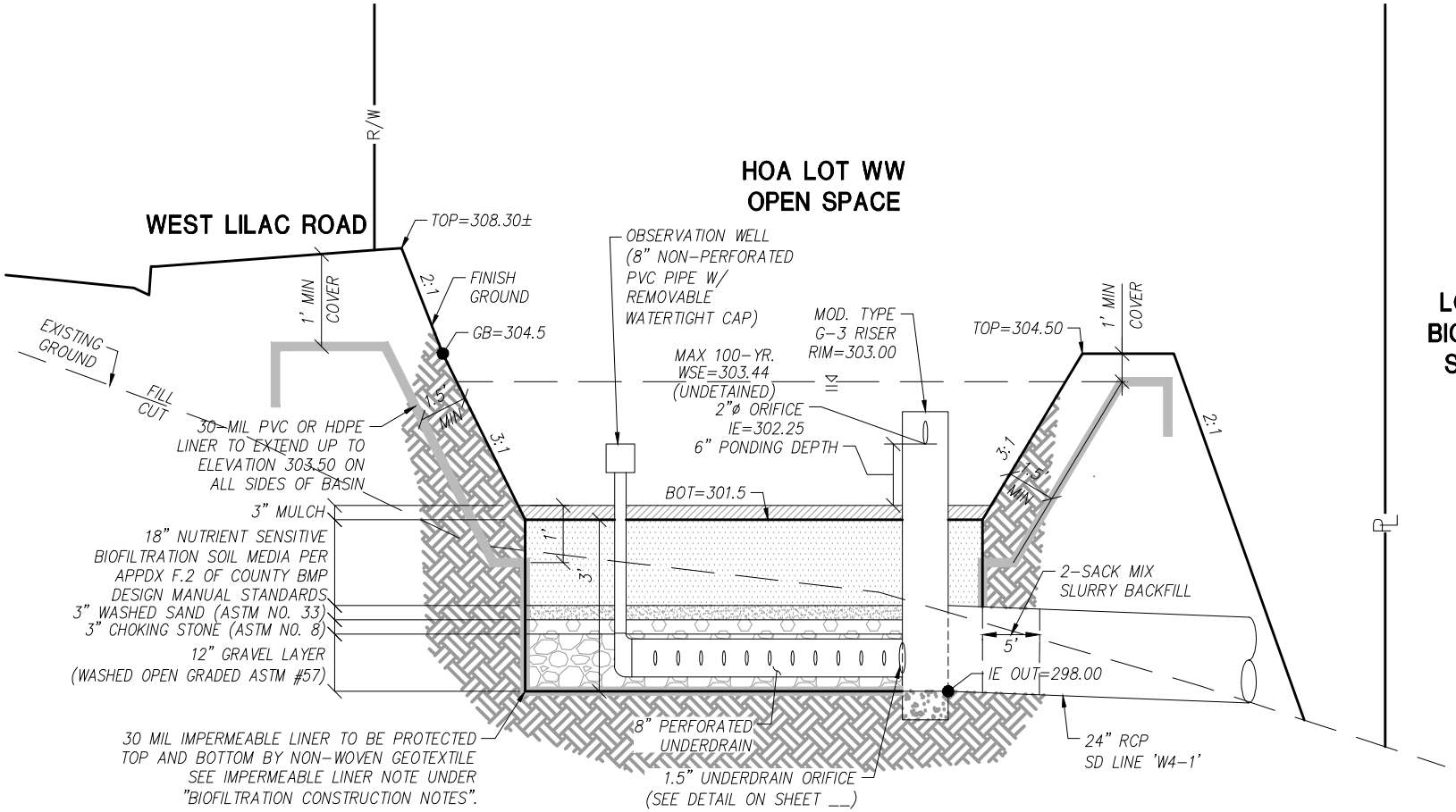


# SECTION 1B-1B: BMP 1B
# LINED BIOFILTRATION (PRIVATE)

NOT TO SCALE

N

| | |
|---|---|
| SCALE: | 1"=60' |
| JOB #: | 4192.10 |
| CREATED: | 5/18/20 |

PREPARED BY:


PROJECT DESIGN CONSULTANTS
Planning | Landscape Architecture | Engineering | Survey
701 B Street, Suite 800
San Diego, CA 92101
619.235.6471 Tel
619.234.0349 Fax


**COUNTY OF SAN DIEGO**

**OCEAN BREEZE RANCH**

*BASIN CROSS SECTIONS*
*EXHIBIT (2 OF 14)*

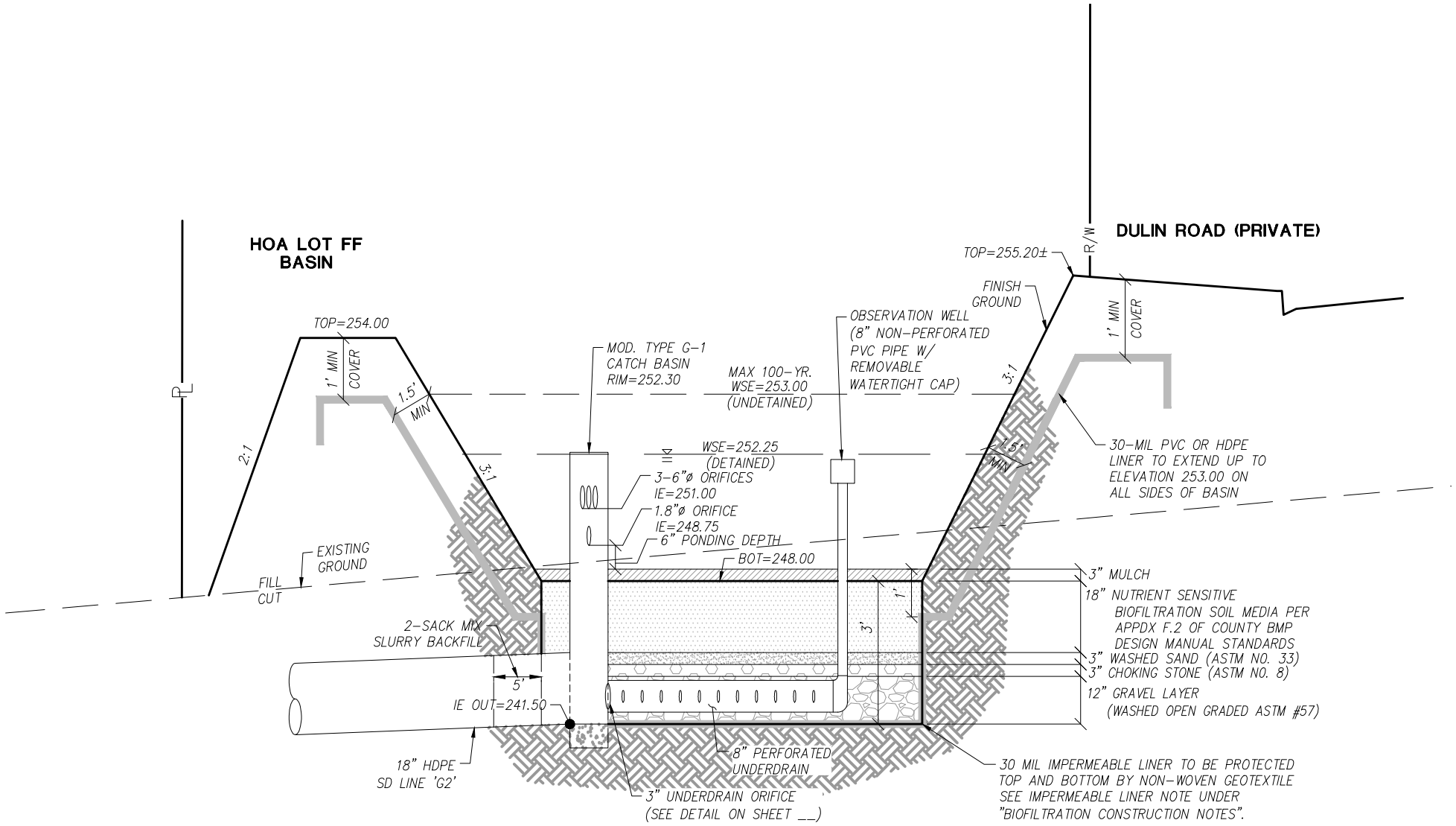


# SECTION 3A-3A: BMP 3A
# LINED BIOFILTRATION (PRIVATE)

NOT TO SCALE

N

| | |
|---|---|
| SCALE: | 1"=60' |
| JOB #: | 4192.10 |
| CREATED: | 5/18/20 |


PREPARED BY:

PROJECT DESIGN CONSULTANTS
Planning | Landscape Architecture | Engineering | Survey

701 B Street, Suite 800
San Diego, CA 92101
619.235.6471 Tel
619.234.0349 Fax


**COUNTY OF SAN DIEGO**

**OCEAN BREEZE RANCH**

***BASIN CROSS SECTIONS***
***EXHIBIT (4 OF 14)***

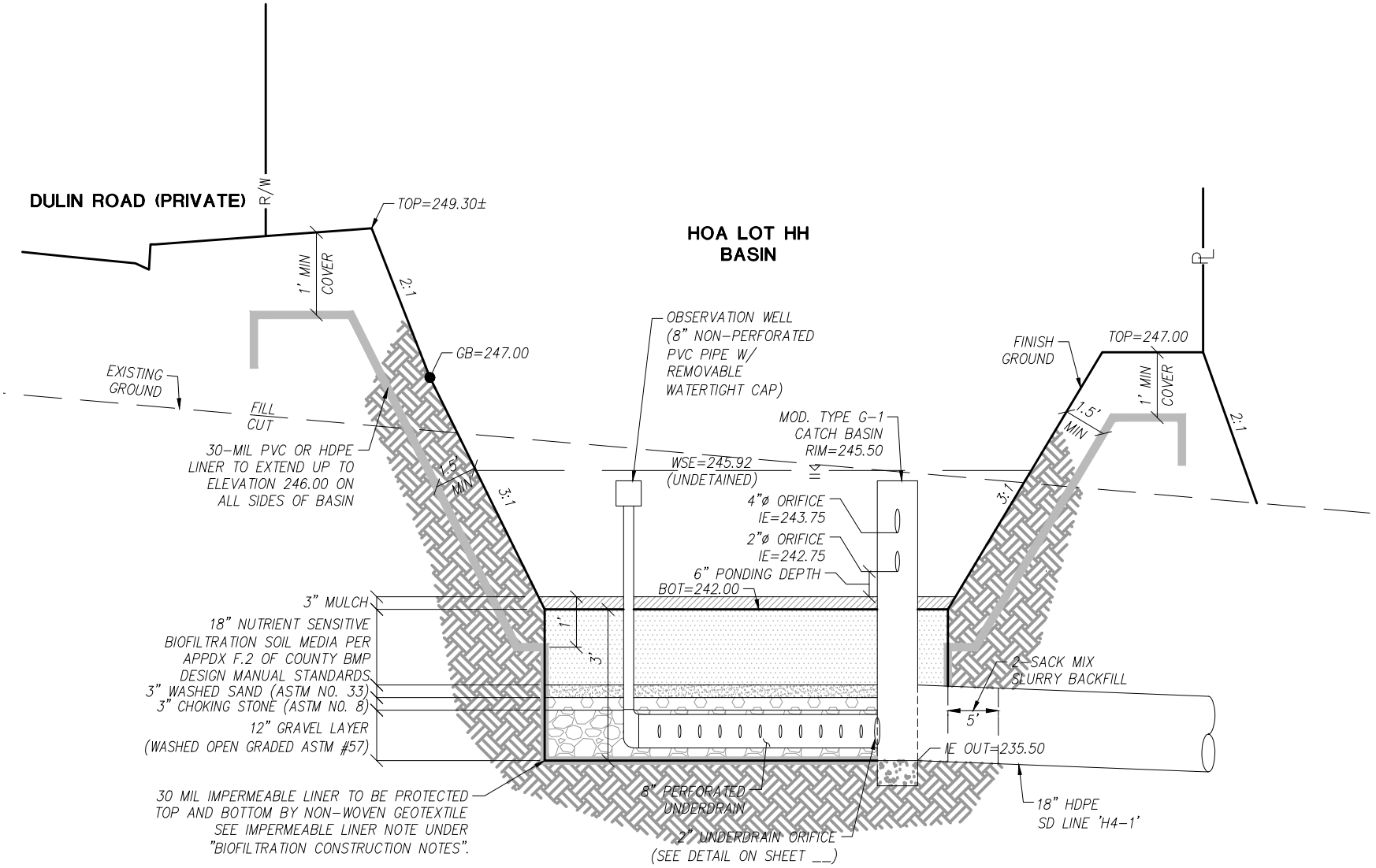


# SECTION 3B-3B: BMP 3B
# LINED BIOFILTRATION (PRIVATE)

NOT TO SCALE

N

| | |
|---|---|
| SCALE: | 1"=60' |
| JOB #: | 4192.10 |
| CREATED: | 5/18/20 |

PREPARED BY:

PROJECT DESIGN CONSULTANTS
Planning | Landscape Architecture | Engineering | Survey
701 B Street, Suite 800
San Diego, CA 92101
619.235.6471 Tel
619.234.0349 Fax

**COUNTY OF SAN DIEGO**

**OCEAN BREEZE RANCH**

***BASIN CROSS SECTIONS***
***EXHIBIT (5 OF 14)***

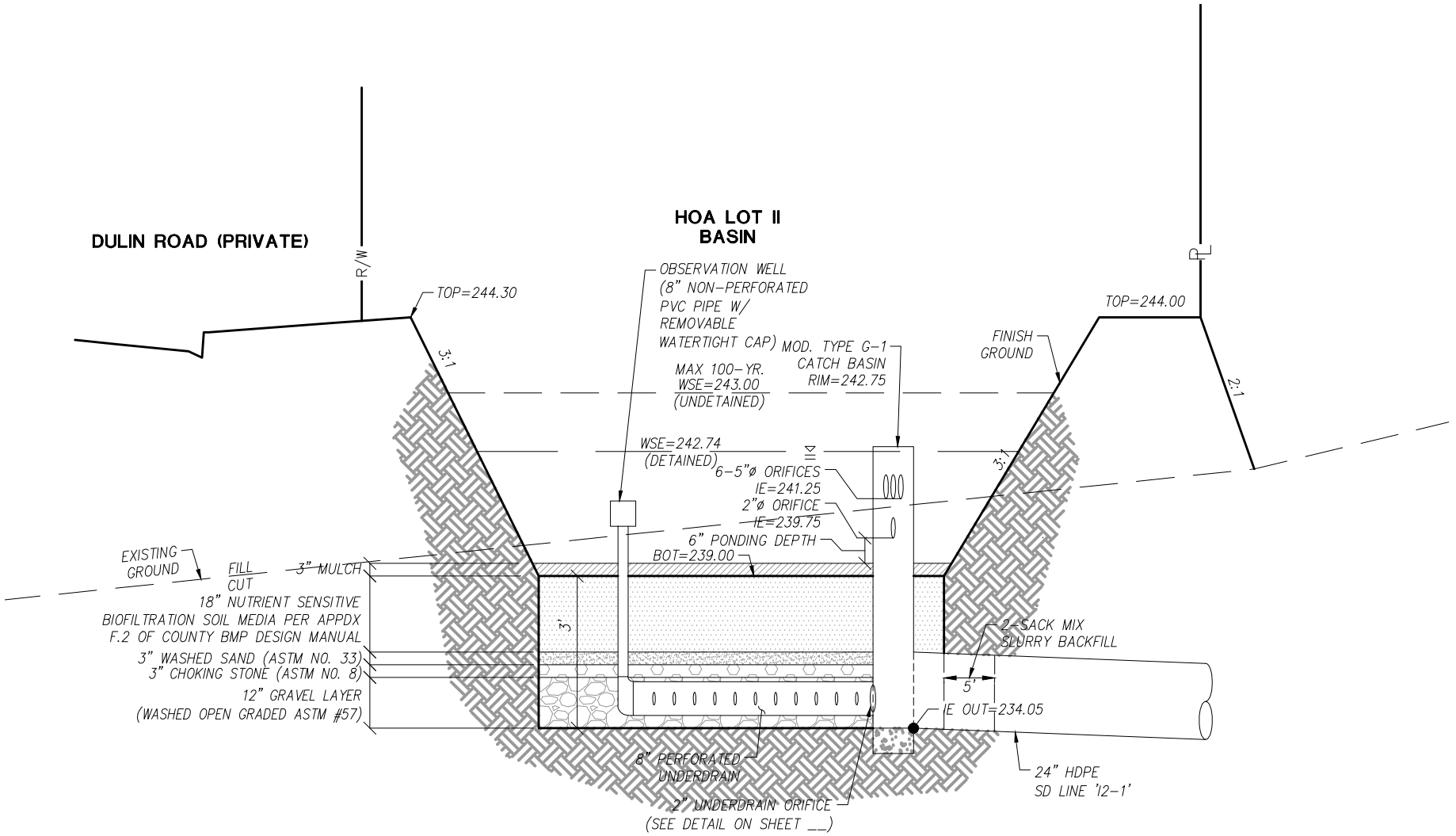


# SECTION 3C-3C: BMP 3C BIOFILTRATION W/ PARTIAL INFILTRATION (PRIVATE)

NOT TO SCALE

N

| | |
|---|---|
| SCALE: | 1"=60' |
| JOB #: | 4192.10 |
| CREATED: | 5/18/20 |

PREPARED BY:

PROJECT DESIGN CONSULTANTS
Planning | Landscape Architecture | Engineering | Survey
701 B Street, Suite 800
San Diego, CA 92101
619.235.6471 Tel
619.234.0349 Fax

**COUNTY OF SAN DIEGO**

**OCEAN BREEZE RANCH**

***BASIN CROSS SECTIONS***
***EXHIBIT (6 OF 14)***

Q:\CA-SAND-PD\Projects\4192.10\Engr\Reports\Hydromod-FE\EXH\4192.10 Hydromod Basin XS.dwg 10/28/2024 1:55:34 PM

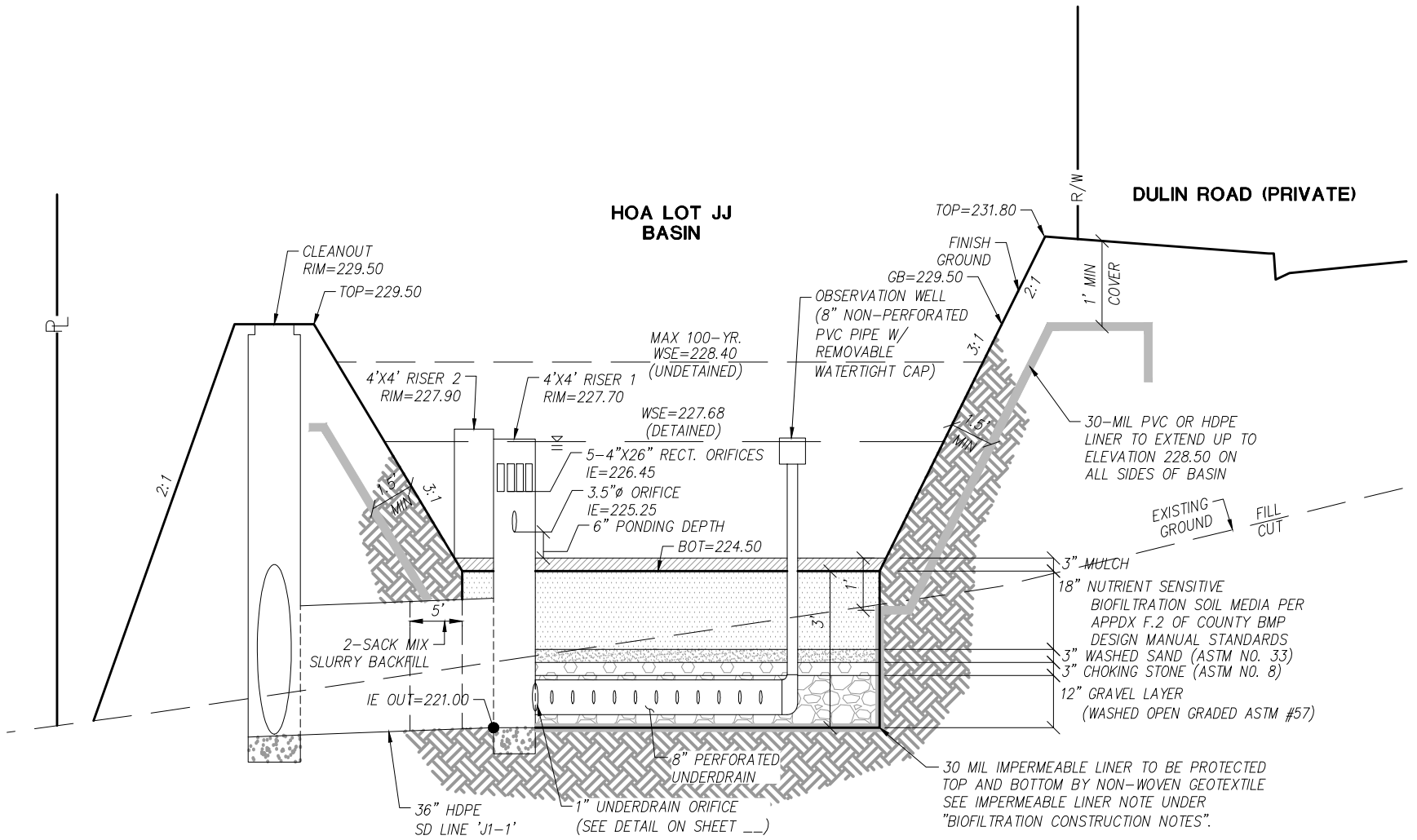


# SECTION 3D-3D: BMP 3D
# LINED BIOFILTRATION (PRIVATE)

NOT TO SCALE

N

| | |
|---|---|
| SCALE: | 1"=60' |
| JOB #: | 4192.10 |
| CREATED: | 5/18/20 |


PREPARED BY:

PROJECT DESIGN CONSULTANTS
Planning | Landscape Architecture | Engineering | Survey

701 B Street, Suite 800
San Diego, CA 92101
619.235.6471 Tel
619.234.0349 Fax


**COUNTY OF SAN DIEGO**

**OCEAN BREEZE RANCH**

***BASIN CROSS SECTIONS***
***EXHIBIT (7 OF 14)***

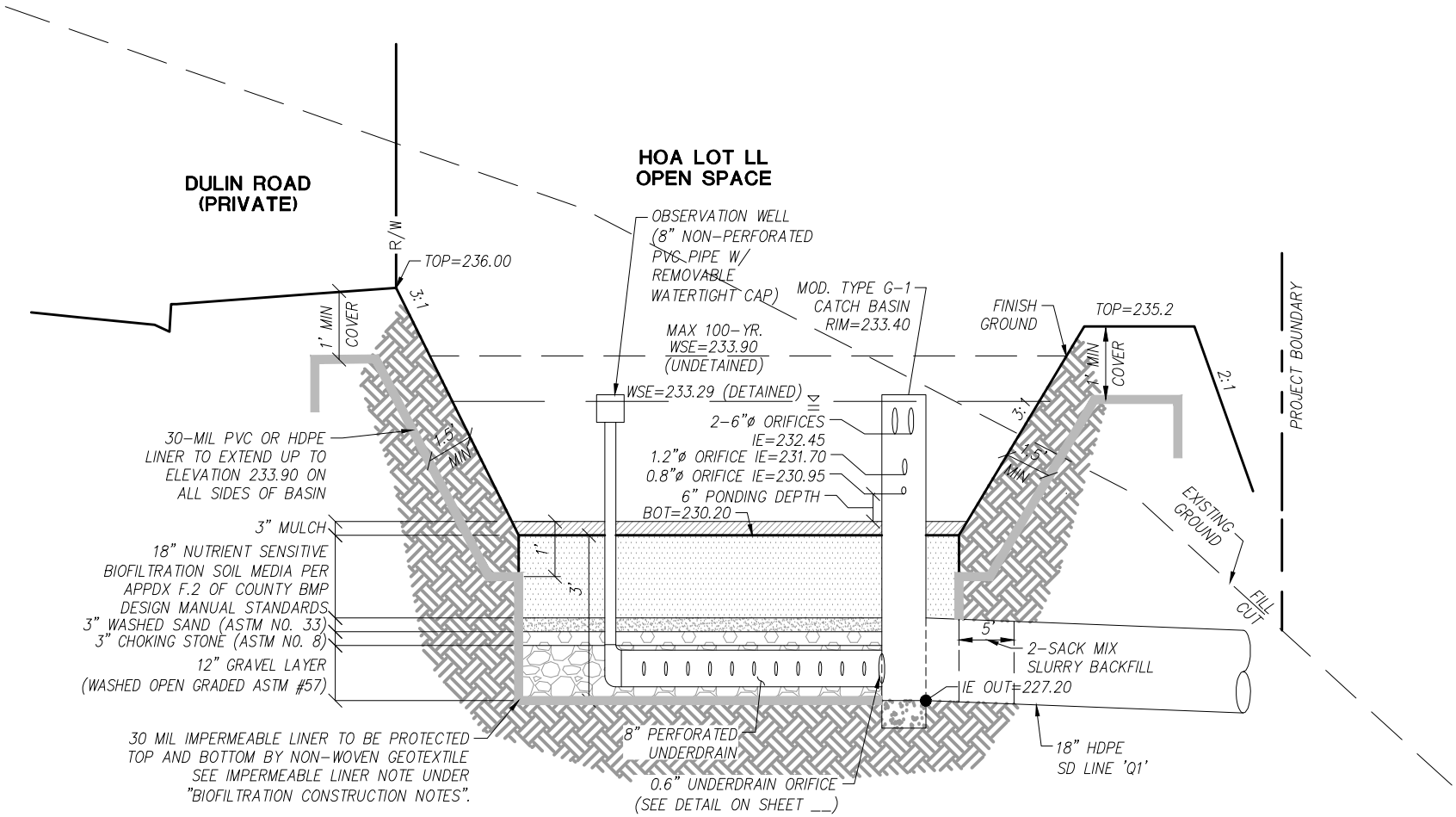


# SECTION 3E-3E: BMP 3E
# LINED BIOFILTRATION (PRIVATE)

NOT TO SCALE

N

| | |
|---|---|
| SCALE: | 1"=60' |
| JOB #: | 4192.10 |
| CREATED: | 5/18/20 |

PREPARED BY:

PROJECT DESIGN CONSULTANTS
Planning | Landscape Architecture | Engineering | Survey
701 B Street, Suite 800
San Diego, CA 92101
619.235.6471 Tel
619.234.0349 Fax

**COUNTY OF SAN DIEGO**

**OCEAN BREEZE RANCH**

***BASIN CROSS SECTIONS***
***EXHIBIT (8 OF 14)***

Q:\CA-SAND-PD\Projects\4192.10\Engr\Reports\Hydromod-FE\EXH\4192.10 Hydromod Basin XS.dwg 6/5/2024 8:37:33 AM

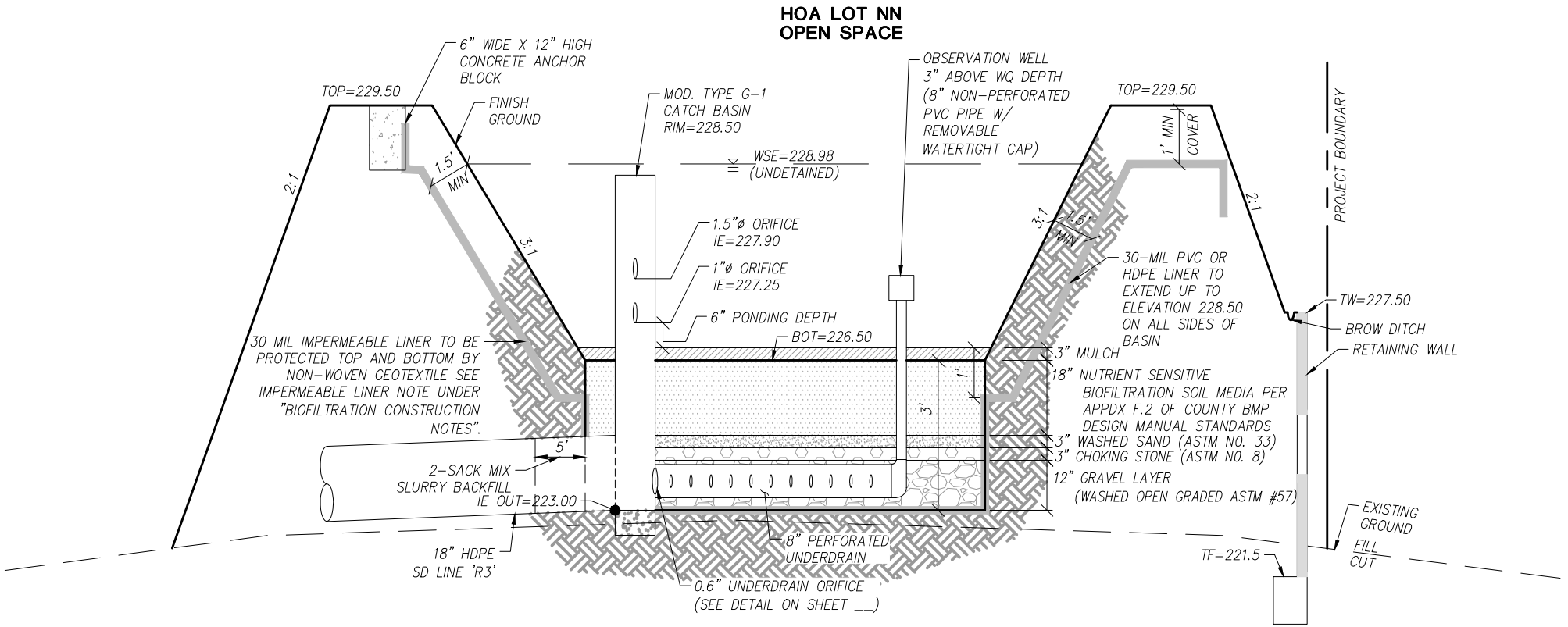


# SECTION 3F-3F: BMP 3F
# LINED BIOFILTRATION (PRIVATE)

NOT TO SCALE

N

| | |
|---|---|
| SCALE: | 1"=60' |
| JOB #: | 4192.10 |
| CREATED: | 5/18/20 |


PREPARED BY:

PROJECT DESIGN CONSULTANTS
Planning | Landscape Architecture | Engineering | Survey

701 B Street, Suite 800
San Diego, CA 92101
619.235.6471 Tel
619.234.0349 Fax


**COUNTY OF SAN DIEGO**

**OCEAN BREEZE RANCH**

***BASIN CROSS SECTIONS***
***EXHIBIT (9 OF 14)***

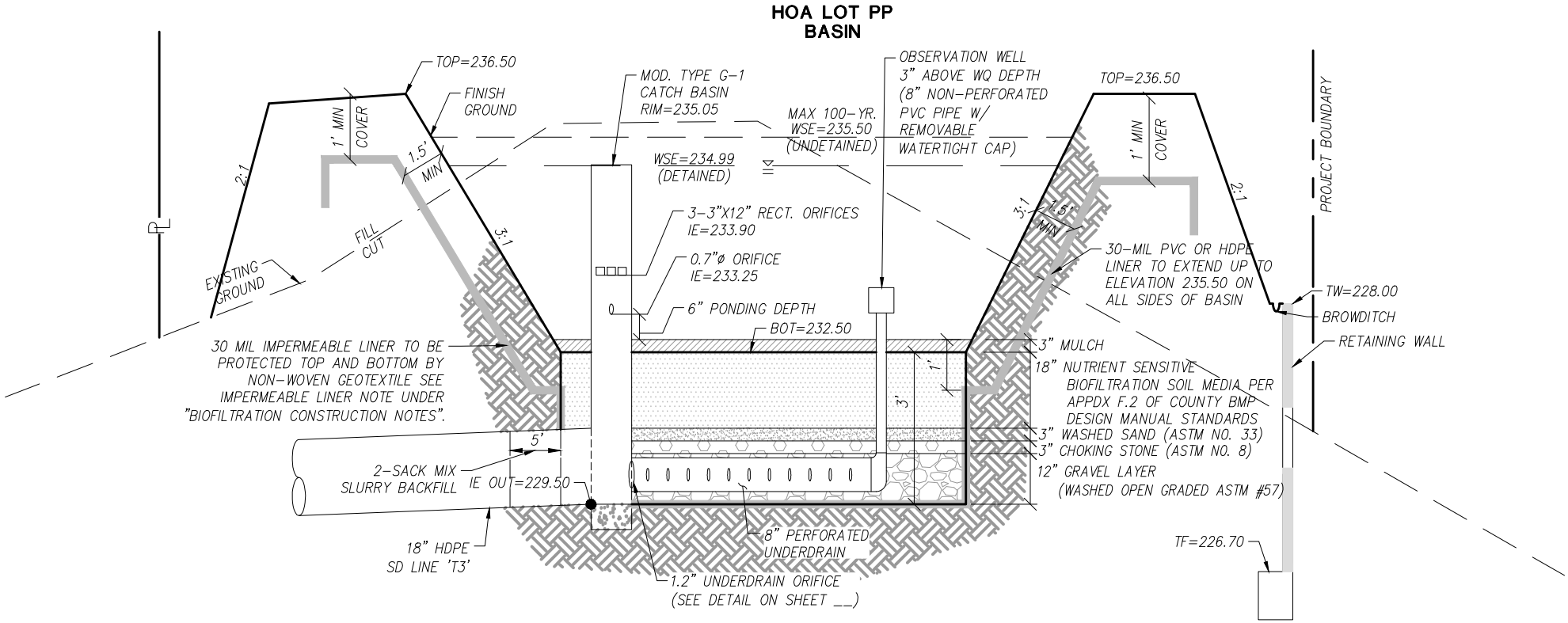


# SECTION 3G-3G: BMP 3G
# LINED BIOFILTRATION (PRIVATE)

NOT TO SCALE

N

| | |
|---|---|
| SCALE: | 1"=60' |
| JOB #: | 4192.10 |
| CREATED: | 5/18/20 |


PREPARED BY:

PROJECT DESIGN CONSULTANTS
Planning | Landscape Architecture | Engineering | Survey

701 B Street, Suite 800
San Diego, CA 92101
619.235.6471 Tel
619.234.0349 Fax


**COUNTY OF SAN DIEGO**

**OCEAN BREEZE RANCH**

***BASIN CROSS SECTIONS***
***EXHIBIT (10 OF 14)***

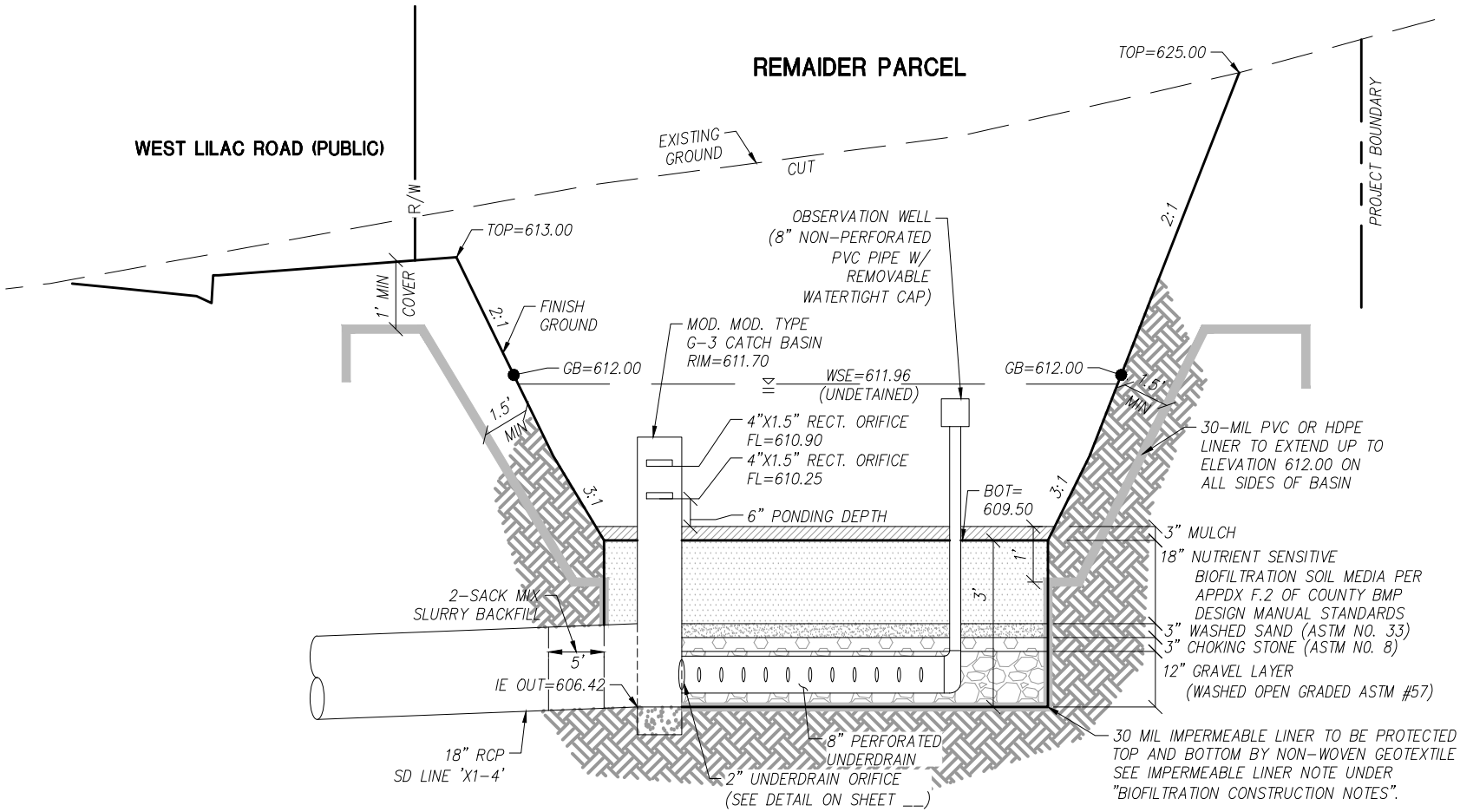


# SECTION 3H-3H: BMP 3H
# LINED BIOFILTRATION (PRIVATE)

NOT TO SCALE

N

| | |
|---|---|
| SCALE: | 1"=60' |
| JOB #: | 4192.10 |
| CREATED: | 5/18/20 |


PREPARED BY:

PROJECT DESIGN CONSULTANTS
Planning | Landscape Architecture | Engineering | Survey

701 B Street, Suite 800
San Diego, CA 92101
619.235.6471 Tel
619.234.0349 Fax


**COUNTY OF SAN DIEGO**

**OCEAN BREEZE RANCH**

***BASIN CROSS SECTIONS***
***EXHIBIT (11 OF 14)***

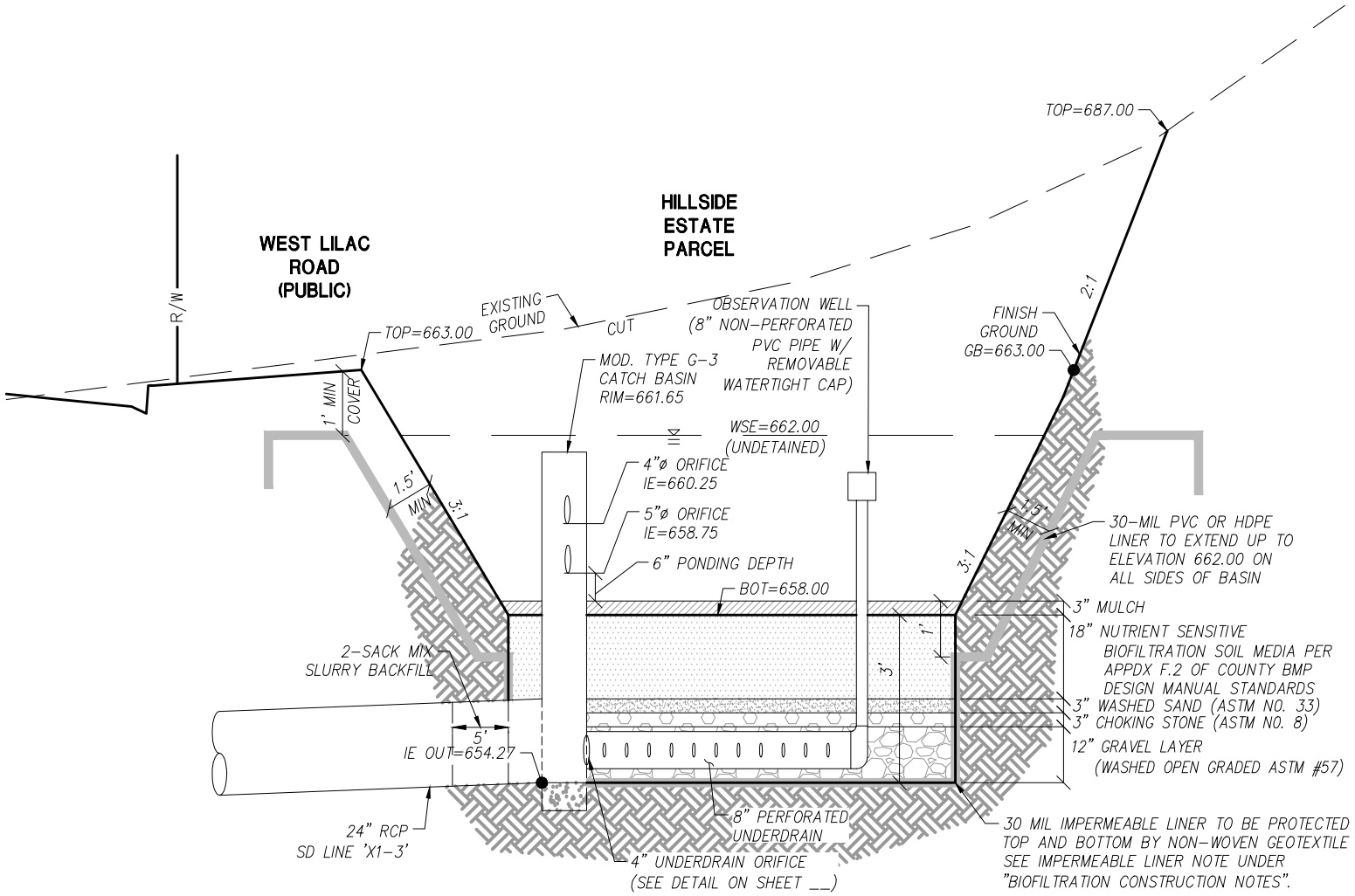


# SECTION 3I-3I: BMP 3I
# LINED BIOFILTRATION (PRIVATE)

NOT TO SCALE

N

| | |
|---|---|
| SCALE: | 1"=60' |
| JOB #: | 4192.10 |
| CREATED: | 5/18/20 |

PREPARED BY:


PROJECT DESIGN CONSULTANTS
Planning | Landscape Architecture | Engineering | Survey
701 B Street, Suite 800
San Diego, CA 92101
619.235.6471 Tel
619.234.0349 Fax


**COUNTY OF SAN DIEGO**

**OCEAN BREEZE RANCH**

***BASIN CROSS SECTIONS***
***EXHIBIT (12 OF 14)***

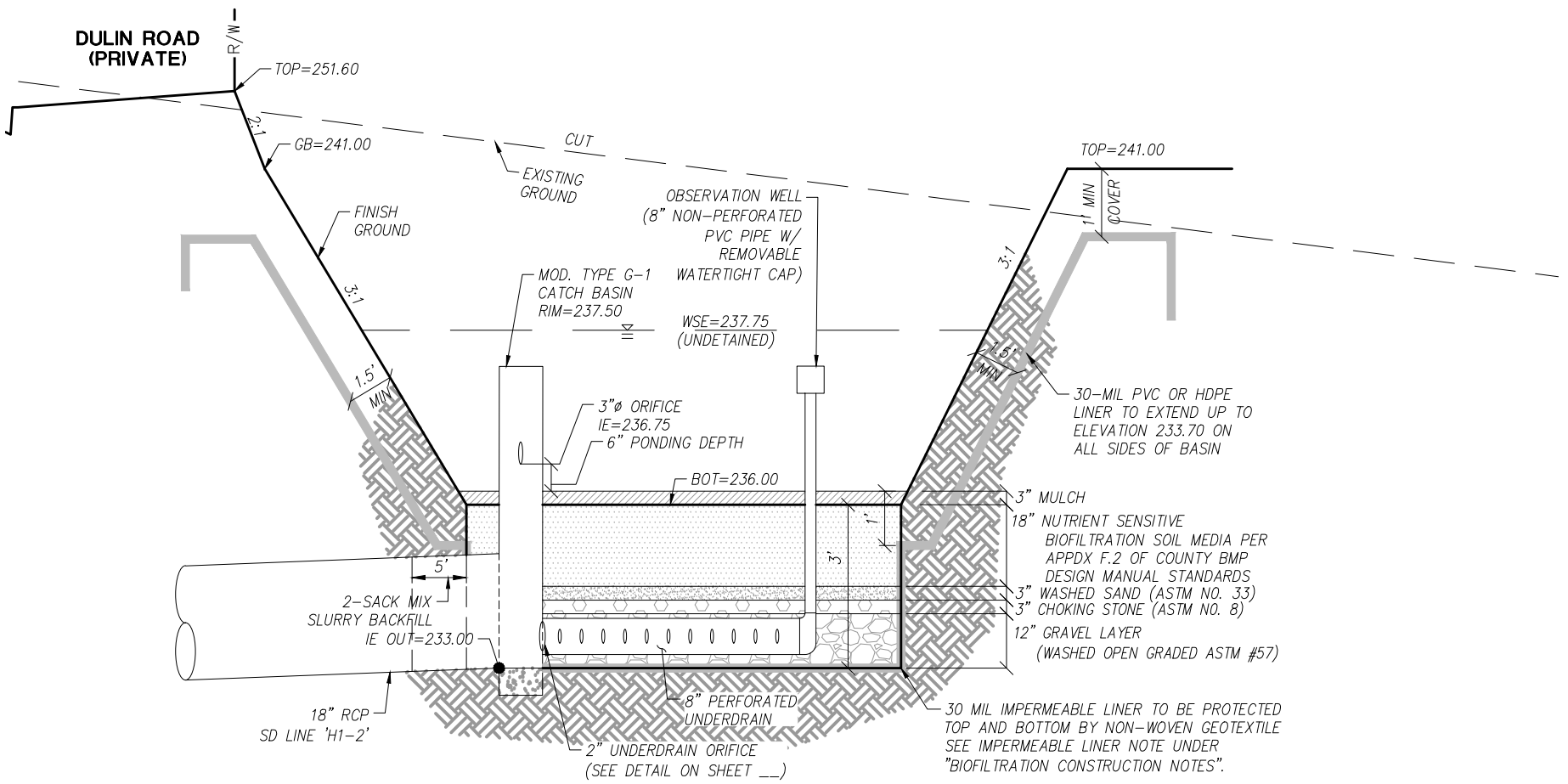


# SECTION 3J-3J: BMP 3J
# LINED BIOFILTRATION (PRIVATE)

NOT TO SCALE

N

| | |
|---|---|
| SCALE: | 1"=60' |
| JOB #: | 4192.10 |
| CREATED: | 5/18/20 |

PREPARED BY:
PROJECT DESIGN CONSULTANTS
Planning | Landscape Architecture | Engineering | Survey
701 B Street, Suite 800
San Diego, CA 92101
619.235.6471 Tel
619.234.0349 Fax

**COUNTY OF SAN DIEGO**

**OCEAN BREEZE RANCH**

***BASIN CROSS SECTIONS***
***EXHIBIT (13 OF 14)***

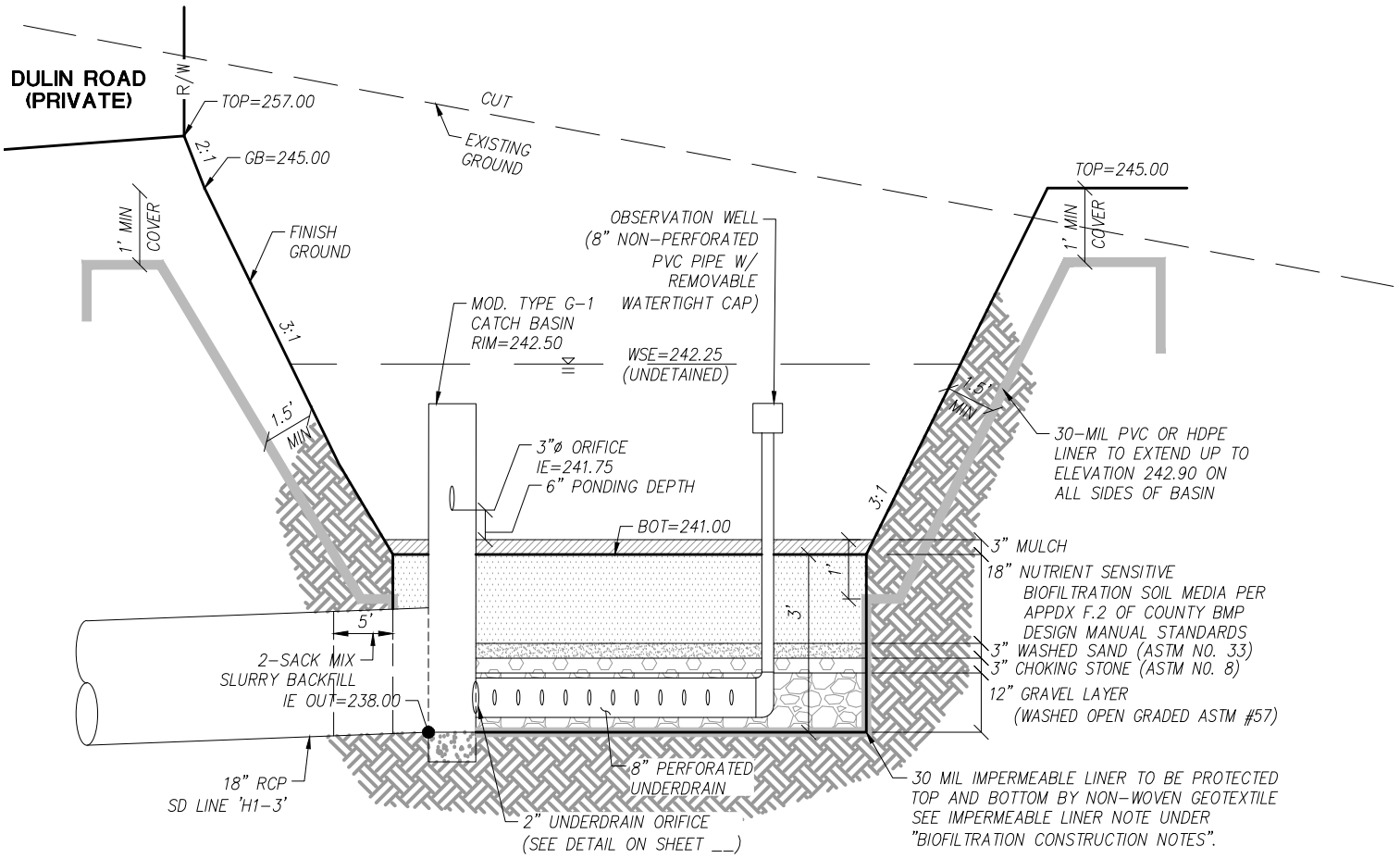


## SECTION 3K-3K: BMP 3K
## LINED BIOFILTRATION (PRIVATE)

NOT TO SCALE

N

| | |
|---|---|
| SCALE: | 1"=60' |
| JOB #: | 4192.10 |
| CREATED: | 5/18/20 |

PREPARED BY:

PROJECT DESIGN CONSULTANTS
Planning | Landscape Architecture | Engineering | Survey
701 B Street, Suite 800
San Diego, CA 92101
619.235.6471 Tel
619.234.0349 Fax

**COUNTY OF SAN DIEGO**

**OCEAN BREEZE RANCH**

*BASIN CROSS SECTIONS*
*EXHIBIT (14 OF 14)*

# Attachment 7

# Flow Duration Curves

# Node 1A

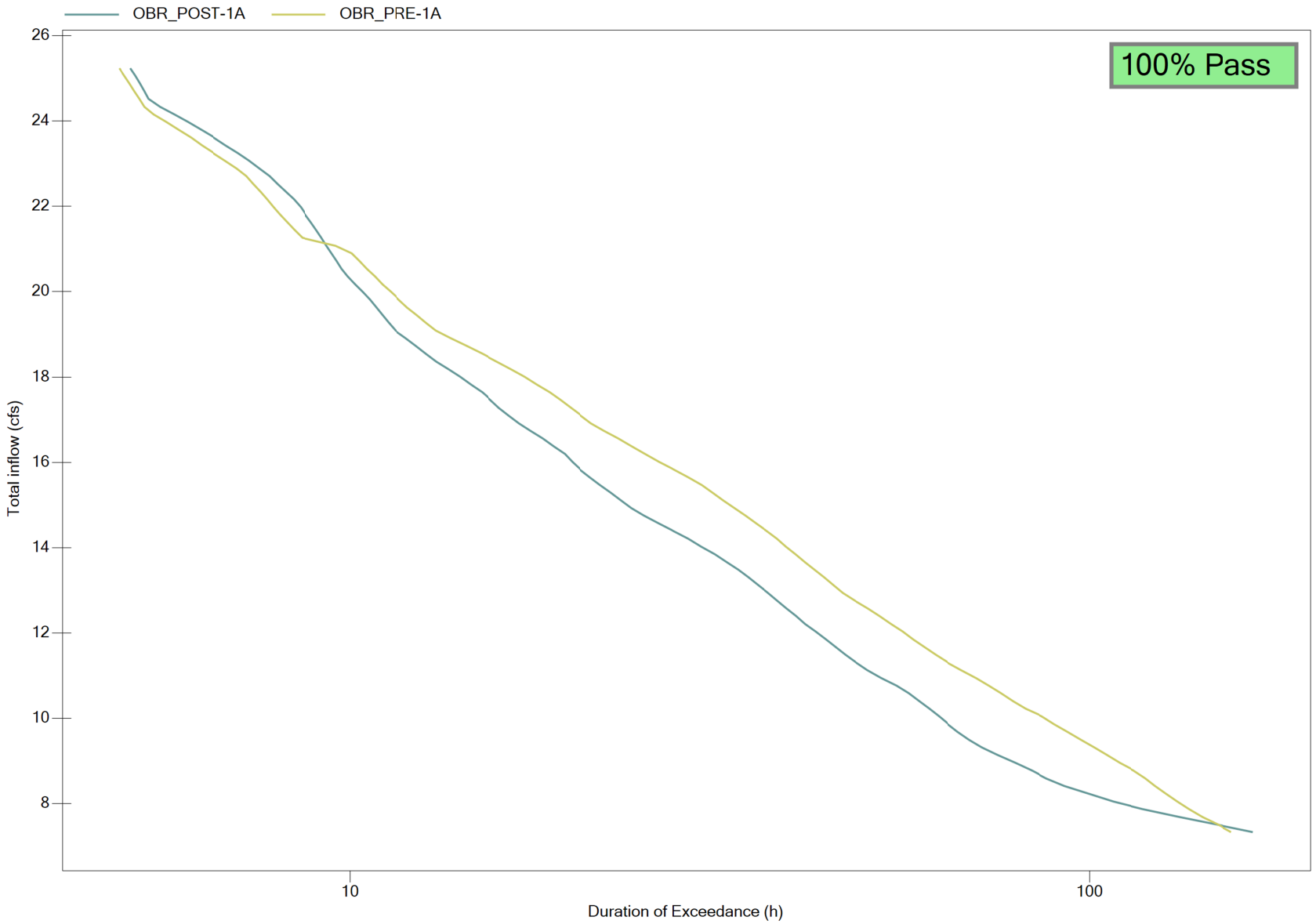
OBR_POST-1A
OBR_PRE-1A
100% Pass
26
24
22
20
18
16
14
12
10
8
Total inflow (cfs)
10
100
Duration of Exceedance (h)

**BASIN 1A**

| | | |
|---|---|---|
| **Lower Flow Threshold:** | 50% | |
| **0.5xQ2 (Pre):** | 7.333 | cfs |
| **Q10 (Pre):** | 25.242 | cfs |
| **# of Ordinates:** | 100 | |
| **Incremental Q (Pre):** | 0.17909 | cfs |
| **Total Hourly Data:** | 498244 | hours |

**The proposed BMP:** PASSED

| Interval | Pre-project Flow (cfs) | Pre-project Hours | Pre-project % Time Exceeding | Post-project Hours | Post-project % Time Exceeding | Percentage | Pass/Fail |
|---|---|---|---|---|---|---|---|
| 0 | 7.333 | 167 | 3.35E-04 | 168 | 3.37E-04 | 101% | Pass |
| 1 | 7.512 | 163 | 3.27E-04 | 151 | 3.03E-04 | 93% | Pass |
| 2 | 7.691 | 157 | 3.15E-04 | 132 | 2.65E-04 | 84% | Pass |
| 3 | 7.870 | 148 | 2.97E-04 | 120 | 2.41E-04 | 81% | Pass |
| 4 | 8.049 | 141 | 2.83E-04 | 106 | 2.13E-04 | 75% | Pass |
| 5 | 8.228 | 139 | 2.79E-04 | 97 | 1.95E-04 | 70% | Pass |
| 6 | 8.407 | 134 | 2.69E-04 | 84 | 1.69E-04 | 63% | Pass |
| 7 | 8.586 | 130 | 2.61E-04 | 77 | 1.55E-04 | 59% | Pass |
| 8 | 8.765 | 126 | 2.53E-04 | 74 | 1.49E-04 | 59% | Pass |
| 9 | 8.944 | 122 | 2.45E-04 | 72 | 1.45E-04 | 59% | Pass |
| 10 | 9.123 | 119 | 2.39E-04 | 69 | 1.38E-04 | 58% | Pass |
| 11 | 9.303 | 113 | 2.27E-04 | 67 | 1.34E-04 | 59% | Pass |
| 12 | 9.482 | 111 | 2.23E-04 | 65 | 1.30E-04 | 59% | Pass |
| 13 | 9.661 | 106 | 2.13E-04 | 62 | 1.24E-04 | 58% | Pass |
| 14 | 9.840 | 103 | 2.07E-04 | 60 | 1.20E-04 | 58% | Pass |
| 15 | 10.019 | 101 | 2.03E-04 | 60 | 1.20E-04 | 59% | Pass |
| 16 | 10.198 | 96 | 1.93E-04 | 59 | 1.18E-04 | 61% | Pass |
| 17 | 10.377 | 88 | 1.77E-04 | 59 | 1.18E-04 | 67% | Pass |
| 18 | 10.556 | 86 | 1.73E-04 | 57 | 1.14E-04 | 66% | Pass |
| 19 | 10.735 | 82 | 1.65E-04 | 54 | 1.08E-04 | 66% | Pass |
| 20 | 10.914 | 76 | 1.53E-04 | 54 | 1.08E-04 | 71% | Pass |
| 21 | 11.093 | 73 | 1.47E-04 | 51 | 1.02E-04 | 70% | Pass |
| 22 | 11.273 | 70 | 1.40E-04 | 50 | 1.00E-04 | 71% | Pass |
| 23 | 11.452 | 68 | 1.36E-04 | 50 | 1.00E-04 | 74% | Pass |
| 24 | 11.631 | 65 | 1.30E-04 | 47 | 9.43E-05 | 72% | Pass |
| 25 | 11.810 | 65 | 1.30E-04 | 45 | 9.03E-05 | 69% | Pass |
| 26 | 11.989 | 65 | 1.30E-04 | 44 | 8.83E-05 | 68% | Pass |
| 27 | 12.168 | 65 | 1.30E-04 | 41 | 8.23E-05 | 63% | Pass |
| 28 | 12.347 | 64 | 1.28E-04 | 40 | 8.03E-05 | 63% | Pass |
| 29 | 12.526 | 62 | 1.24E-04 | 38 | 7.63E-05 | 61% | Pass |
| 30 | 12.705 | 60 | 1.20E-04 | 37 | 7.43E-05 | 62% | Pass |
| 31 | 12.884 | 57 | 1.14E-04 | 36 | 7.23E-05 | 63% | Pass |
| 32 | 13.063 | 55 | 1.10E-04 | 36 | 7.23E-05 | 65% | Pass |
| 33 | 13.243 | 55 | 1.10E-04 | 35 | 7.02E-05 | 64% | Pass |
| 34 | 13.422 | 53 | 1.06E-04 | 35 | 7.02E-05 | 66% | Pass |
| 35 | 13.601 | 51 | 1.02E-04 | 34 | 6.82E-05 | 67% | Pass |
| 36 | 13.780 | 50 | 1.00E-04 | 34 | 6.82E-05 | 68% | Pass |
| 37 | 13.959 | 48 | 9.63E-05 | 32 | 6.42E-05 | 67% | Pass |
| 38 | 14.138 | 47 | 9.43E-05 | 31 | 6.22E-05 | 66% | Pass |
| 39 | 14.317 | 45 | 9.03E-05 | 30 | 6.02E-05 | 67% | Pass |
| 40 | 14.496 | 45 | 9.03E-05 | 29 | 5.82E-05 | 64% | Pass |
| 41 | 14.675 | 44 | 8.83E-05 | 28 | 5.62E-05 | 64% | Pass |
| 42 | 14.854 | 43 | 8.63E-05 | 26 | 5.22E-05 | 60% | Pass |
| 43 | 15.033 | 42 | 8.43E-05 | 25 | 5.02E-05 | 60% | Pass |
| 44 | 15.213 | 39 | 7.83E-05 | 25 | 5.02E-05 | 64% | Pass |
| 45 | 15.392 | 39 | 7.83E-05 | 25 | 5.02E-05 | 64% | Pass |
| 46 | 15.571 | 37 | 7.43E-05 | 25 | 5.02E-05 | 68% | Pass |
| 47 | 15.750 | 36 | 7.23E-05 | 24 | 4.82E-05 | 67% | Pass |
| 48 | 15.929 | 35 | 7.02E-05 | 23 | 4.62E-05 | 66% | Pass |
| 49 | 16.108 | 34 | 6.82E-05 | 23 | 4.62E-05 | 68% | Pass |
| 50 | 16.287 | 33 | 6.62E-05 | 21 | 4.21E-05 | 64% | Pass |
| 51 | 16.466 | 33 | 6.62E-05 | 21 | 4.21E-05 | 64% | Pass |
| 52 | 16.645 | 31 | 6.22E-05 | 20 | 4.01E-05 | 65% | Pass |
| 53 | 16.824 | 28 | 5.62E-05 | 18 | 3.61E-05 | 64% | Pass |

| | | | | | | | |
|---|---|---|---|---|---|---|---|
| 54 | 17.003 | 27 | 5.42E-05 | 17 | 3.41E-05 | 63% | Pass |
| 55 | 17.183 | 26 | 5.22E-05 | 17 | 3.41E-05 | 65% | Pass |
| 56 | 17.362 | 26 | 5.22E-05 | 16 | 3.21E-05 | 62% | Pass |
| 57 | 17.541 | 26 | 5.22E-05 | 16 | 3.21E-05 | 62% | Pass |
| 58 | 17.720 | 24 | 4.82E-05 | 15 | 3.01E-05 | 63% | Pass |
| 59 | 17.899 | 24 | 4.82E-05 | 15 | 3.01E-05 | 63% | Pass |
| 60 | 18.078 | 23 | 4.62E-05 | 15 | 3.01E-05 | 65% | Pass |
| 61 | 18.257 | 23 | 4.62E-05 | 15 | 3.01E-05 | 65% | Pass |
| 62 | 18.436 | 23 | 4.62E-05 | 14 | 2.81E-05 | 61% | Pass |
| 63 | 18.615 | 23 | 4.62E-05 | 14 | 2.81E-05 | 61% | Pass |
| 64 | 18.794 | 23 | 4.62E-05 | 14 | 2.81E-05 | 61% | Pass |
| 65 | 18.973 | 22 | 4.42E-05 | 14 | 2.81E-05 | 64% | Pass |
| 66 | 19.153 | 20 | 4.01E-05 | 13 | 2.61E-05 | 65% | Pass |
| 67 | 19.332 | 19 | 3.81E-05 | 12 | 2.41E-05 | 63% | Pass |
| 68 | 19.511 | 19 | 3.81E-05 | 12 | 2.41E-05 | 63% | Pass |
| 69 | 19.690 | 18 | 3.61E-05 | 12 | 2.41E-05 | 67% | Pass |
| 70 | 19.869 | 17 | 3.41E-05 | 12 | 2.41E-05 | 71% | Pass |
| 71 | 20.048 | 17 | 3.41E-05 | 11 | 2.21E-05 | 65% | Pass |
| 72 | 20.227 | 16 | 3.21E-05 | 11 | 2.21E-05 | 69% | Pass |
| 73 | 20.406 | 16 | 3.21E-05 | 10 | 2.01E-05 | 63% | Pass |
| 74 | 20.585 | 15 | 3.01E-05 | 10 | 2.01E-05 | 67% | Pass |
| 75 | 20.764 | 15 | 3.01E-05 | 9 | 1.81E-05 | 60% | Pass |
| 76 | 20.943 | 15 | 3.01E-05 | 9 | 1.81E-05 | 60% | Pass |
| 77 | 21.123 | 12 | 2.41E-05 | 9 | 1.81E-05 | 75% | Pass |
| 78 | 21.302 | 12 | 2.41E-05 | 9 | 1.81E-05 | 75% | Pass |
| 79 | 21.481 | 12 | 2.41E-05 | 9 | 1.81E-05 | 75% | Pass |
| 80 | 21.660 | 11 | 2.21E-05 | 9 | 1.81E-05 | 82% | Pass |
| 81 | 21.839 | 11 | 2.21E-05 | 9 | 1.81E-05 | 82% | Pass |
| 82 | 22.018 | 11 | 2.21E-05 | 9 | 1.81E-05 | 82% | Pass |
| 83 | 22.197 | 11 | 2.21E-05 | 8 | 1.61E-05 | 73% | Pass |
| 84 | 22.376 | 11 | 2.21E-05 | 8 | 1.61E-05 | 73% | Pass |
| 85 | 22.555 | 11 | 2.21E-05 | 8 | 1.61E-05 | 73% | Pass |
| 86 | 22.734 | 11 | 2.21E-05 | 7 | 1.40E-05 | 64% | Pass |
| 87 | 22.913 | 10 | 2.01E-05 | 7 | 1.40E-05 | 70% | Pass |
| 88 | 23.093 | 9 | 1.81E-05 | 7 | 1.40E-05 | 78% | Pass |
| 89 | 23.272 | 8 | 1.61E-05 | 6 | 1.20E-05 | 75% | Pass |
| 90 | 23.451 | 8 | 1.61E-05 | 6 | 1.20E-05 | 75% | Pass |
| 91 | 23.630 | 8 | 1.61E-05 | 6 | 1.20E-05 | 75% | Pass |
| 92 | 23.809 | 8 | 1.61E-05 | 6 | 1.20E-05 | 75% | Pass |
| 93 | 23.988 | 8 | 1.61E-05 | 6 | 1.20E-05 | 75% | Pass |
| 94 | 24.167 | 8 | 1.61E-05 | 6 | 1.20E-05 | 75% | Pass |
| 95 | 24.346 | 5 | 1.00E-05 | 5 | 1.00E-05 | 100% | Pass |
| 96 | 24.525 | 5 | 1.00E-05 | 5 | 1.00E-05 | 100% | Pass |
| 97 | 24.704 | 5 | 1.00E-05 | 5 | 1.00E-05 | 100% | Pass |
| 98 | 24.883 | 5 | 1.00E-05 | 5 | 1.00E-05 | 100% | Pass |
| 99 | 25.063 | 5 | 1.00E-05 | 5 | 1.00E-05 | 100% | Pass |
| 100 | 25.242 | 5 | 1.00E-05 | 5 | 1.00E-05 | 100% | Pass |

# Node POC

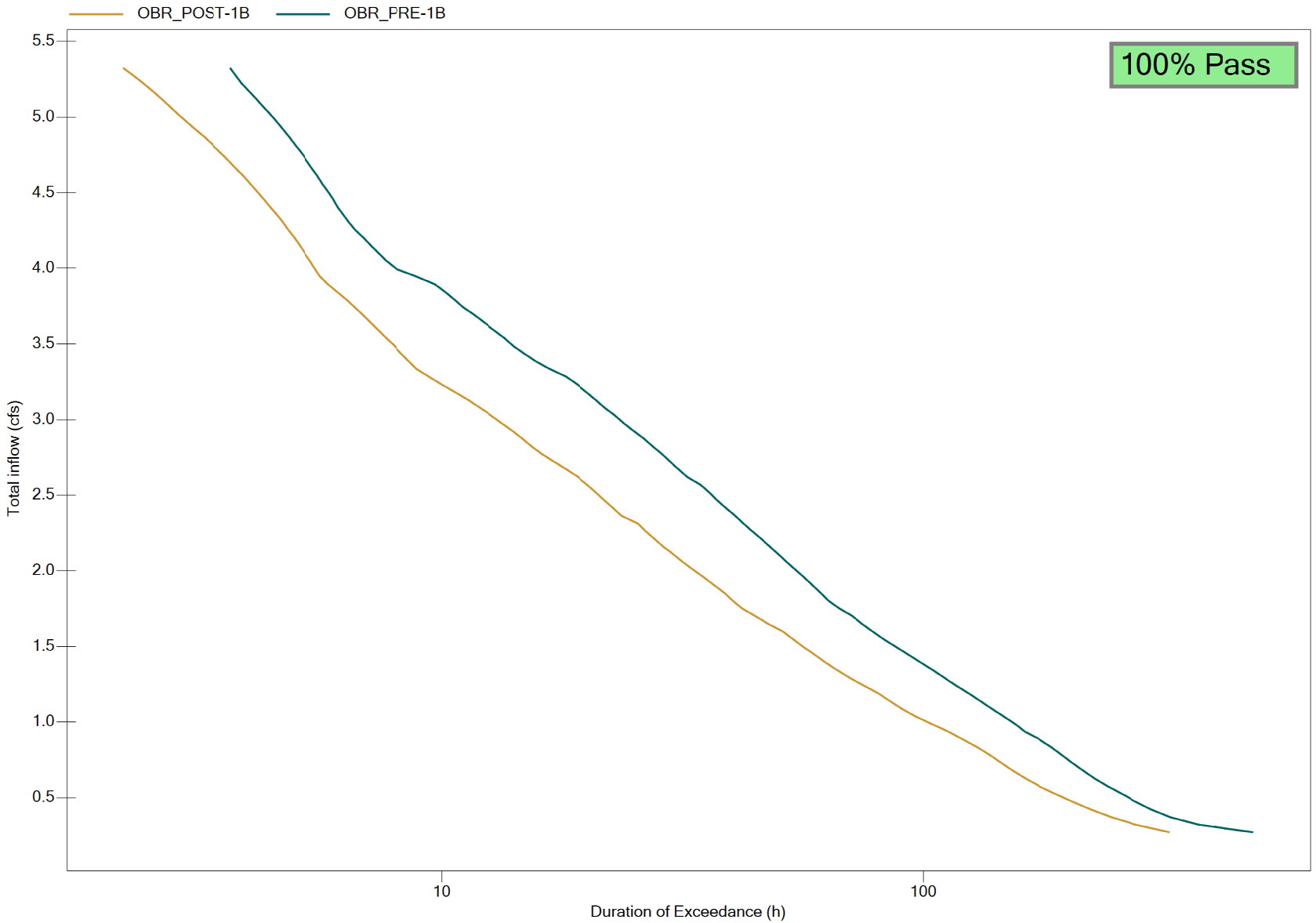
OBR_POST-1B
OBR_PRE-1B
100% Pass
Total inflow (cfs)
5.5
5.0
4.5
4.0
3.5
3.0
2.5
2.0
1.5
1.0
0.5
10
100
Duration of Exceedance (h)

**BASIN 1B**

| | | |
|---|---|---|
| **Lower Flow Threshold:** | 10% | |
| **0.1xQ2 (Pre):** | 0.270 | cfs |
| **Q10 (Pre):** | 5.326 | cfs |
| **# of Ordinates:** | 100 | |
| **Incremental Q (Pre):** | 0.05056 | cfs |
| **Total Hourly Data:** | 498244 | hours |

**The proposed BMP:** **PASSED**

| Interval | Pre-project Flow (cfs) | Pre-project Hours | Pre-project % Time Exceeding | Post-project Hours | Post-project % Time Exceeding | Percentage | Pass/Fail |
|---|---|---|---|---|---|---|---|
| 0 | 0.270 | 533 | 1.07E-03 | 309 | 6.20E-04 | 58% | Pass |
| 1 | 0.321 | 339 | 6.80E-04 | 263 | 5.28E-04 | 78% | Pass |
| 2 | 0.371 | 297 | 5.96E-04 | 226 | 4.54E-04 | 76% | Pass |
| 3 | 0.422 | 259 | 5.20E-04 | 207 | 4.15E-04 | 80% | Pass |
| 4 | 0.473 | 240 | 4.82E-04 | 193 | 3.87E-04 | 80% | Pass |
| 5 | 0.523 | 228 | 4.58E-04 | 177 | 3.55E-04 | 78% | Pass |
| 6 | 0.574 | 215 | 4.32E-04 | 165 | 3.31E-04 | 77% | Pass |
| 7 | 0.624 | 209 | 4.19E-04 | 157 | 3.15E-04 | 75% | Pass |
| 8 | 0.675 | 201 | 4.03E-04 | 147 | 2.95E-04 | 73% | Pass |
| 9 | 0.725 | 193 | 3.87E-04 | 140 | 2.81E-04 | 73% | Pass |
| 10 | 0.776 | 187 | 3.75E-04 | 138 | 2.77E-04 | 74% | Pass |
| 11 | 0.826 | 180 | 3.61E-04 | 130 | 2.61E-04 | 72% | Pass |
| 12 | 0.877 | 177 | 3.55E-04 | 121 | 2.43E-04 | 68% | Pass |
| 13 | 0.928 | 163 | 3.27E-04 | 115 | 2.31E-04 | 71% | Pass |
| 14 | 0.978 | 153 | 3.07E-04 | 108 | 2.17E-04 | 71% | Pass |
| 15 | 1.029 | 147 | 2.95E-04 | 101 | 2.03E-04 | 69% | Pass |
| 16 | 1.079 | 143 | 2.87E-04 | 94 | 1.89E-04 | 66% | Pass |
| 17 | 1.130 | 140 | 2.81E-04 | 88 | 1.77E-04 | 63% | Pass |
| 18 | 1.180 | 129 | 2.59E-04 | 84 | 1.69E-04 | 65% | Pass |
| 19 | 1.231 | 122 | 2.45E-04 | 79 | 1.59E-04 | 65% | Pass |
| 20 | 1.281 | 117 | 2.35E-04 | 76 | 1.53E-04 | 65% | Pass |
| 21 | 1.332 | 114 | 2.29E-04 | 72 | 1.45E-04 | 63% | Pass |
| 22 | 1.383 | 114 | 2.29E-04 | 68 | 1.36E-04 | 60% | Pass |
| 23 | 1.433 | 109 | 2.19E-04 | 66 | 1.32E-04 | 61% | Pass |
| 24 | 1.484 | 105 | 2.11E-04 | 58 | 1.16E-04 | 55% | Pass |
| 25 | 1.534 | 99 | 1.99E-04 | 55 | 1.10E-04 | 56% | Pass |
| 26 | 1.585 | 95 | 1.91E-04 | 54 | 1.08E-04 | 57% | Pass |
| 27 | 1.635 | 89 | 1.79E-04 | 50 | 1.00E-04 | 56% | Pass |
| 28 | 1.686 | 87 | 1.75E-04 | 49 | 9.83E-05 | 56% | Pass |
| 29 | 1.737 | 82 | 1.65E-04 | 46 | 9.23E-05 | 56% | Pass |
| 30 | 1.787 | 73 | 1.47E-04 | 43 | 8.63E-05 | 59% | Pass |
| 31 | 1.838 | 71 | 1.43E-04 | 43 | 8.63E-05 | 61% | Pass |
| 32 | 1.888 | 70 | 1.40E-04 | 42 | 8.43E-05 | 60% | Pass |
| 33 | 1.939 | 64 | 1.28E-04 | 40 | 8.03E-05 | 63% | Pass |
| 34 | 1.989 | 63 | 1.26E-04 | 39 | 7.83E-05 | 62% | Pass |
| 35 | 2.040 | 61 | 1.22E-04 | 37 | 7.43E-05 | 61% | Pass |
| 36 | 2.090 | 59 | 1.18E-04 | 37 | 7.43E-05 | 63% | Pass |
| 37 | 2.141 | 58 | 1.16E-04 | 37 | 7.43E-05 | 64% | Pass |
| 38 | 2.192 | 57 | 1.14E-04 | 34 | 6.82E-05 | 60% | Pass |
| 39 | 2.242 | 55 | 1.10E-04 | 30 | 6.02E-05 | 55% | Pass |
| 40 | 2.293 | 53 | 1.06E-04 | 30 | 6.02E-05 | 57% | Pass |
| 41 | 2.343 | 52 | 1.04E-04 | 29 | 5.82E-05 | 56% | Pass |
| 42 | 2.394 | 48 | 9.63E-05 | 28 | 5.62E-05 | 58% | Pass |
| 43 | 2.444 | 47 | 9.43E-05 | 28 | 5.62E-05 | 60% | Pass |
| 44 | 2.495 | 42 | 8.43E-05 | 27 | 5.42E-05 | 64% | Pass |
| 45 | 2.545 | 42 | 8.43E-05 | 26 | 5.22E-05 | 62% | Pass |
| 46 | 2.596 | 40 | 8.03E-05 | 23 | 4.62E-05 | 58% | Pass |
| 47 | 2.647 | 37 | 7.43E-05 | 22 | 4.42E-05 | 59% | Pass |
| 48 | 2.697 | 37 | 7.43E-05 | 22 | 4.42E-05 | 59% | Pass |
| 49 | 2.748 | 36 | 7.23E-05 | 22 | 4.42E-05 | 61% | Pass |
| 50 | 2.798 | 36 | 7.23E-05 | 19 | 3.81E-05 | 53% | Pass |
| 51 | 2.849 | 36 | 7.23E-05 | 18 | 3.61E-05 | 50% | Pass |
| 52 | 2.899 | 36 | 7.23E-05 | 16 | 3.21E-05 | 44% | Pass |

| | | | | | | | |
|---|---|---|---|---|---|---|---|
| 53 | 2.950 | 35 | 7.02E-05 | 16 | 3.21E-05 | 46% | Pass |
| 54 | 3.001 | 32 | 6.42E-05 | 16 | 3.21E-05 | 50% | Pass |
| 55 | 3.051 | 32 | 6.42E-05 | 16 | 3.21E-05 | 50% | Pass |
| 56 | 3.102 | 31 | 6.22E-05 | 15 | 3.01E-05 | 48% | Pass |
| 57 | 3.152 | 30 | 6.02E-05 | 14 | 2.81E-05 | 47% | Pass |
| 58 | 3.203 | 30 | 6.02E-05 | 13 | 2.61E-05 | 43% | Pass |
| 59 | 3.253 | 28 | 5.62E-05 | 12 | 2.41E-05 | 43% | Pass |
| 60 | 3.304 | 27 | 5.42E-05 | 12 | 2.41E-05 | 44% | Pass |
| 61 | 3.354 | 27 | 5.42E-05 | 10 | 2.01E-05 | 37% | Pass |
| 62 | 3.405 | 25 | 5.02E-05 | 10 | 2.01E-05 | 40% | Pass |
| 63 | 3.456 | 24 | 4.82E-05 | 9 | 1.81E-05 | 38% | Pass |
| 64 | 3.506 | 19 | 3.81E-05 | 8 | 1.61E-05 | 42% | Pass |
| 65 | 3.557 | 19 | 3.81E-05 | 7 | 1.40E-05 | 37% | Pass |
| 66 | 3.607 | 19 | 3.81E-05 | 7 | 1.40E-05 | 37% | Pass |
| 67 | 3.658 | 19 | 3.81E-05 | 7 | 1.40E-05 | 37% | Pass |
| 68 | 3.708 | 19 | 3.81E-05 | 7 | 1.40E-05 | 37% | Pass |
| 69 | 3.759 | 18 | 3.61E-05 | 7 | 1.40E-05 | 39% | Pass |
| 70 | 3.809 | 18 | 3.61E-05 | 7 | 1.40E-05 | 39% | Pass |
| 71 | 3.860 | 18 | 3.61E-05 | 7 | 1.40E-05 | 39% | Pass |
| 72 | 3.911 | 15 | 3.01E-05 | 7 | 1.40E-05 | 47% | Pass |
| 73 | 3.961 | 14 | 2.81E-05 | 5 | 1.00E-05 | 36% | Pass |
| 74 | 4.012 | 13 | 2.61E-05 | 5 | 1.00E-05 | 38% | Pass |
| 75 | 4.062 | 12 | 2.41E-05 | 5 | 1.00E-05 | 42% | Pass |
| 76 | 4.113 | 11 | 2.21E-05 | 5 | 1.00E-05 | 45% | Pass |
| 77 | 4.163 | 11 | 2.21E-05 | 5 | 1.00E-05 | 45% | Pass |
| 78 | 4.214 | 11 | 2.21E-05 | 5 | 1.00E-05 | 45% | Pass |
| 79 | 4.265 | 10 | 2.01E-05 | 5 | 1.00E-05 | 50% | Pass |
| 80 | 4.315 | 8 | 1.61E-05 | 5 | 1.00E-05 | 63% | Pass |
| 81 | 4.366 | 8 | 1.61E-05 | 5 | 1.00E-05 | 63% | Pass |
| 82 | 4.416 | 7 | 1.40E-05 | 5 | 1.00E-05 | 71% | Pass |
| 83 | 4.467 | 7 | 1.40E-05 | 5 | 1.00E-05 | 71% | Pass |
| 84 | 4.517 | 7 | 1.40E-05 | 5 | 1.00E-05 | 71% | Pass |
| 85 | 4.568 | 7 | 1.40E-05 | 5 | 1.00E-05 | 71% | Pass |
| 86 | 4.618 | 7 | 1.40E-05 | 5 | 1.00E-05 | 71% | Pass |
| 87 | 4.669 | 7 | 1.40E-05 | 5 | 1.00E-05 | 71% | Pass |
| 88 | 4.720 | 7 | 1.40E-05 | 5 | 1.00E-05 | 71% | Pass |
| 89 | 4.770 | 7 | 1.40E-05 | 5 | 1.00E-05 | 71% | Pass |
| 90 | 4.821 | 7 | 1.40E-05 | 5 | 1.00E-05 | 71% | Pass |
| 91 | 4.871 | 7 | 1.40E-05 | 5 | 1.00E-05 | 71% | Pass |
| 92 | 4.922 | 7 | 1.40E-05 | 5 | 1.00E-05 | 71% | Pass |
| 93 | 4.972 | 7 | 1.40E-05 | 5 | 1.00E-05 | 71% | Pass |
| 94 | 5.023 | 7 | 1.40E-05 | 4 | 8.03E-06 | 57% | Pass |
| 95 | 5.073 | 7 | 1.40E-05 | 4 | 8.03E-06 | 57% | Pass |
| 96 | 5.124 | 7 | 1.40E-05 | 4 | 8.03E-06 | 57% | Pass |
| 97 | 5.175 | 7 | 1.40E-05 | 4 | 8.03E-06 | 57% | Pass |
| 98 | 5.225 | 5 | 1.00E-05 | 4 | 8.03E-06 | 80% | Pass |
| 99 | 5.276 | 5 | 1.00E-05 | 4 | 8.03E-06 | 80% | Pass |
| 100 | 5.326 | 5 | 1.00E-05 | 4 | 8.03E-06 | 80% | Pass |

# Node 2H

Flow Duration Curve Comparison

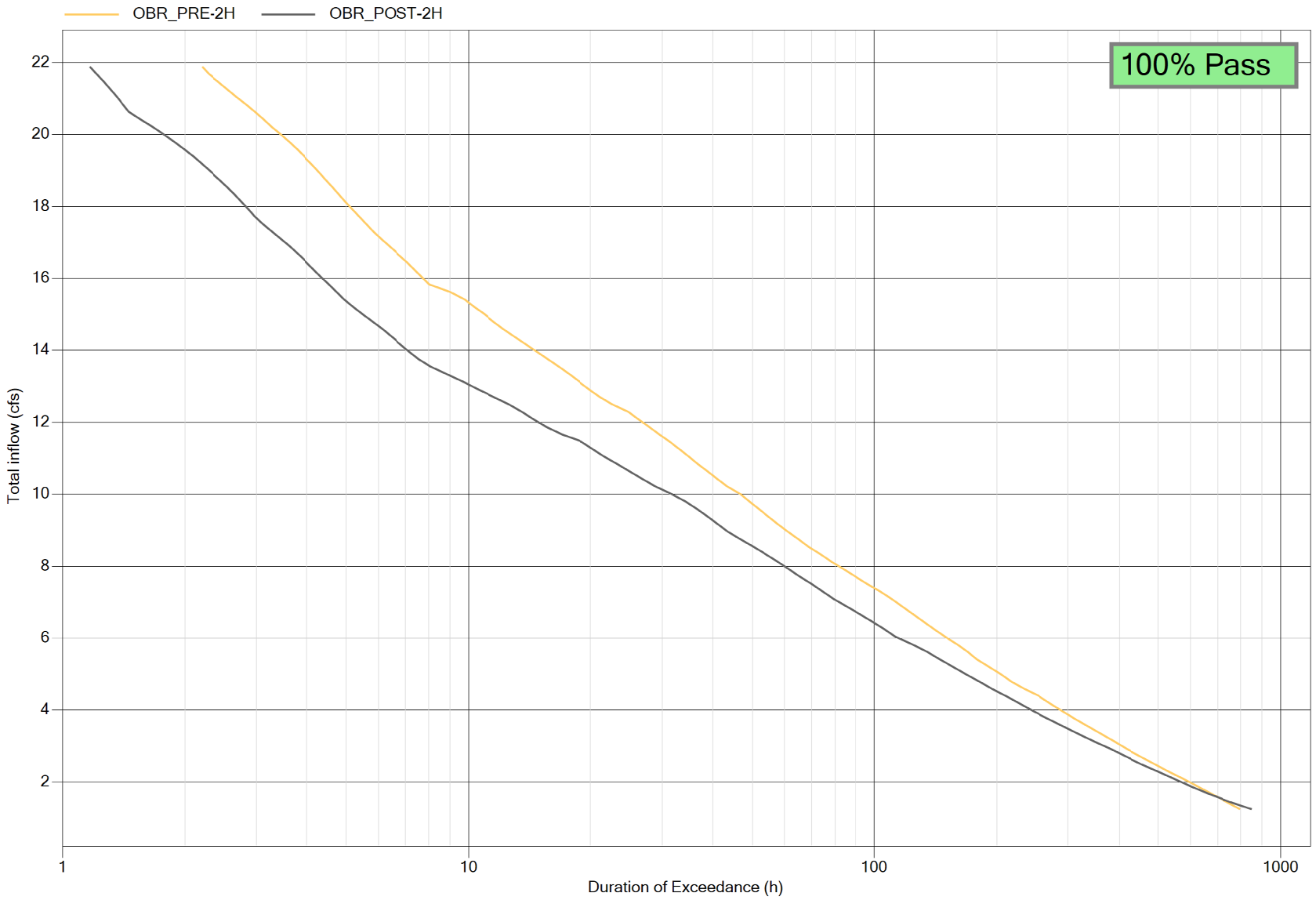

**BASIN 2H**

| | | |
|---|---|---|
| **Lower Flow Threshold:** | 10% | |
| **0.1xQ2 (Pre):** | 1.254 | cfs |
| **Q10 (Pre):** | 21.188 | cfs |
| **# of Ordinates:** | 100 | |
| **Incremental Q (Pre):** | 0.19934 | cfs |
| **Total Hourly Data:** | 498244 | hours |

**The proposed BMP:** **PASSED**

| Interval | Pre-project Flow (cfs) | Pre-project Hours | Pre-project % Time Exceeding | Post-project Hours | Post-project % Time Exceeding | Percentage | Pass/Fail |
|---|---|---|---|---|---|---|---|
| 0 | 1.254 | 724 | 1.45E-03 | 778 | 1.56E-03 | 107% | Pass |
| 1 | 1.454 | 673 | 1.35E-03 | 687 | 1.38E-03 | 102% | Pass |
| 2 | 1.653 | 632 | 1.27E-03 | 615 | 1.23E-03 | 97% | Pass |
| 3 | 1.852 | 590 | 1.18E-03 | 554 | 1.11E-03 | 94% | Pass |
| 4 | 2.052 | 557 | 1.12E-03 | 510 | 1.02E-03 | 92% | Pass |
| 5 | 2.251 | 521 | 1.05E-03 | 463 | 9.29E-04 | 89% | Pass |
| 6 | 2.450 | 487 | 9.77E-04 | 430 | 8.63E-04 | 88% | Pass |
| 7 | 2.650 | 461 | 9.25E-04 | 403 | 8.09E-04 | 87% | Pass |
| 8 | 2.849 | 429 | 8.61E-04 | 362 | 7.27E-04 | 84% | Pass |
| 9 | 3.048 | 399 | 8.01E-04 | 329 | 6.60E-04 | 82% | Pass |
| 10 | 3.248 | 376 | 7.55E-04 | 314 | 6.30E-04 | 84% | Pass |
| 11 | 3.447 | 354 | 7.10E-04 | 296 | 5.94E-04 | 84% | Pass |
| 12 | 3.646 | 330 | 6.62E-04 | 272 | 5.46E-04 | 82% | Pass |
| 13 | 3.846 | 315 | 6.32E-04 | 245 | 4.92E-04 | 78% | Pass |
| 14 | 4.045 | 303 | 6.08E-04 | 221 | 4.44E-04 | 73% | Pass |
| 15 | 4.244 | 282 | 5.66E-04 | 207 | 4.15E-04 | 73% | Pass |
| 16 | 4.444 | 270 | 5.42E-04 | 190 | 3.81E-04 | 70% | Pass |
| 17 | 4.643 | 251 | 5.04E-04 | 181 | 3.63E-04 | 72% | Pass |
| 18 | 4.842 | 236 | 4.74E-04 | 174 | 3.49E-04 | 74% | Pass |
| 19 | 5.042 | 227 | 4.56E-04 | 166 | 3.33E-04 | 73% | Pass |
| 20 | 5.241 | 216 | 4.34E-04 | 158 | 3.17E-04 | 73% | Pass |
| 21 | 5.440 | 201 | 4.03E-04 | 148 | 2.97E-04 | 74% | Pass |
| 22 | 5.640 | 185 | 3.71E-04 | 142 | 2.85E-04 | 77% | Pass |
| 23 | 5.839 | 176 | 3.53E-04 | 131 | 2.63E-04 | 74% | Pass |
| 24 | 6.038 | 165 | 3.31E-04 | 119 | 2.39E-04 | 72% | Pass |
| 25 | 6.238 | 154 | 3.09E-04 | 114 | 2.29E-04 | 74% | Pass |
| 26 | 6.437 | 145 | 2.91E-04 | 109 | 2.19E-04 | 75% | Pass |
| 27 | 6.636 | 141 | 2.83E-04 | 98 | 1.97E-04 | 70% | Pass |
| 28 | 6.836 | 133 | 2.67E-04 | 92 | 1.85E-04 | 69% | Pass |
| 29 | 7.035 | 129 | 2.59E-04 | 85 | 1.71E-04 | 66% | Pass |
| 30 | 7.234 | 125 | 2.51E-04 | 83 | 1.67E-04 | 66% | Pass |
| 31 | 7.434 | 120 | 2.41E-04 | 80 | 1.61E-04 | 67% | Pass |
| 32 | 7.633 | 118 | 2.37E-04 | 76 | 1.53E-04 | 64% | Pass |
| 33 | 7.832 | 111 | 2.23E-04 | 68 | 1.36E-04 | 61% | Pass |
| 34 | 8.032 | 103 | 2.07E-04 | 67 | 1.34E-04 | 65% | Pass |
| 35 | 8.231 | 96 | 1.93E-04 | 63 | 1.26E-04 | 66% | Pass |
| 36 | 8.430 | 93 | 1.87E-04 | 59 | 1.18E-04 | 63% | Pass |
| 37 | 8.630 | 90 | 1.81E-04 | 54 | 1.08E-04 | 60% | Pass |
| 38 | 8.829 | 85 | 1.71E-04 | 53 | 1.06E-04 | 62% | Pass |
| 39 | 9.029 | 81 | 1.63E-04 | 50 | 1.00E-04 | 62% | Pass |
| 40 | 9.228 | 76 | 1.53E-04 | 47 | 9.43E-05 | 62% | Pass |
| 41 | 9.427 | 73 | 1.47E-04 | 45 | 9.03E-05 | 62% | Pass |
| 42 | 9.627 | 71 | 1.43E-04 | 43 | 8.63E-05 | 61% | Pass |
| 43 | 9.826 | 67 | 1.34E-04 | 40 | 8.03E-05 | 60% | Pass |
| 44 | 10.025 | 66 | 1.32E-04 | 38 | 7.63E-05 | 58% | Pass |
| 45 | 10.225 | 61 | 1.22E-04 | 35 | 7.02E-05 | 57% | Pass |
| 46 | 10.424 | 58 | 1.16E-04 | 31 | 6.22E-05 | 53% | Pass |
| 47 | 10.623 | 56 | 1.12E-04 | 30 | 6.02E-05 | 54% | Pass |
| 48 | 10.823 | 52 | 1.04E-04 | 29 | 5.82E-05 | 56% | Pass |
| 49 | 11.022 | 48 | 9.63E-05 | 28 | 5.62E-05 | 58% | Pass |
| 50 | 11.221 | 46 | 9.23E-05 | 26 | 5.22E-05 | 57% | Pass |
| 51 | 11.421 | 44 | 8.83E-05 | 24 | 4.82E-05 | 55% | Pass |
| 52 | 11.620 | 43 | 8.63E-05 | 20 | 4.01E-05 | 47% | Pass |

| | | | | | | | |
|---|---|---|---|---|---|---|---|
| 53 | 11.819 | 43 | 8.63E-05 | 18 | 3.61E-05 | 42% | Pass |
| 54 | 12.019 | 41 | 8.23E-05 | 17 | 3.41E-05 | 41% | Pass |
| 55 | 12.218 | 39 | 7.83E-05 | 17 | 3.41E-05 | 44% | Pass |
| 56 | 12.417 | 37 | 7.43E-05 | 16 | 3.21E-05 | 43% | Pass |
| 57 | 12.617 | 35 | 7.02E-05 | 15 | 3.01E-05 | 43% | Pass |
| 58 | 12.816 | 34 | 6.82E-05 | 15 | 3.01E-05 | 44% | Pass |
| 59 | 13.015 | 32 | 6.42E-05 | 14 | 2.81E-05 | 44% | Pass |
| 60 | 13.215 | 30 | 6.02E-05 | 12 | 2.41E-05 | 40% | Pass |
| 61 | 13.414 | 29 | 5.82E-05 | 12 | 2.41E-05 | 41% | Pass |
| 62 | 13.613 | 28 | 5.62E-05 | 10 | 2.01E-05 | 36% | Pass |
| 63 | 13.813 | 27 | 5.42E-05 | 10 | 2.01E-05 | 37% | Pass |
| 64 | 14.012 | 25 | 5.02E-05 | 9 | 1.81E-05 | 36% | Pass |
| 65 | 14.211 | 24 | 4.82E-05 | 9 | 1.81E-05 | 38% | Pass |
| 66 | 14.411 | 24 | 4.82E-05 | 7 | 1.40E-05 | 29% | Pass |
| 67 | 14.610 | 20 | 4.01E-05 | 6 | 1.20E-05 | 30% | Pass |
| 68 | 14.809 | 19 | 3.81E-05 | 6 | 1.20E-05 | 32% | Pass |
| 69 | 15.009 | 18 | 3.61E-05 | 6 | 1.20E-05 | 33% | Pass |
| 70 | 15.208 | 18 | 3.61E-05 | 6 | 1.20E-05 | 33% | Pass |
| 71 | 15.407 | 17 | 3.41E-05 | 5 | 1.00E-05 | 29% | Pass |
| 72 | 15.607 | 15 | 3.01E-05 | 5 | 1.00E-05 | 33% | Pass |
| 73 | 15.806 | 12 | 2.41E-05 | 5 | 1.00E-05 | 42% | Pass |
| 74 | 16.005 | 12 | 2.41E-05 | 5 | 1.00E-05 | 42% | Pass |
| 75 | 16.205 | 12 | 2.41E-05 | 5 | 1.00E-05 | 42% | Pass |
| 76 | 16.404 | 12 | 2.41E-05 | 5 | 1.00E-05 | 42% | Pass |
| 77 | 16.604 | 12 | 2.41E-05 | 4 | 8.03E-06 | 33% | Pass |
| 78 | 16.803 | 12 | 2.41E-05 | 4 | 8.03E-06 | 33% | Pass |
| 79 | 17.002 | 11 | 2.21E-05 | 4 | 8.03E-06 | 36% | Pass |
| 80 | 17.202 | 11 | 2.21E-05 | 4 | 8.03E-06 | 36% | Pass |
| 81 | 17.401 | 9 | 1.81E-05 | 4 | 8.03E-06 | 44% | Pass |
| 82 | 17.600 | 9 | 1.81E-05 | 3 | 6.02E-06 | 33% | Pass |
| 83 | 17.800 | 9 | 1.81E-05 | 3 | 6.02E-06 | 33% | Pass |
| 84 | 17.999 | 8 | 1.61E-05 | 3 | 6.02E-06 | 38% | Pass |
| 85 | 18.198 | 8 | 1.61E-05 | 3 | 6.02E-06 | 38% | Pass |
| 86 | 18.398 | 7 | 1.40E-05 | 3 | 6.02E-06 | 43% | Pass |
| 87 | 18.597 | 7 | 1.40E-05 | 3 | 6.02E-06 | 43% | Pass |
| 88 | 18.796 | 7 | 1.40E-05 | 3 | 6.02E-06 | 43% | Pass |
| 89 | 18.996 | 7 | 1.40E-05 | 3 | 6.02E-06 | 43% | Pass |
| 90 | 19.195 | 7 | 1.40E-05 | 3 | 6.02E-06 | 43% | Pass |
| 91 | 19.394 | 7 | 1.40E-05 | 3 | 6.02E-06 | 43% | Pass |
| 92 | 19.594 | 7 | 1.40E-05 | 3 | 6.02E-06 | 43% | Pass |
| 93 | 19.793 | 7 | 1.40E-05 | 3 | 6.02E-06 | 43% | Pass |
| 94 | 19.992 | 7 | 1.40E-05 | 3 | 6.02E-06 | 43% | Pass |
| 95 | 20.192 | 7 | 1.40E-05 | 3 | 6.02E-06 | 43% | Pass |
| 96 | 20.391 | 6 | 1.20E-05 | 3 | 6.02E-06 | 50% | Pass |
| 97 | 20.590 | 6 | 1.20E-05 | 2 | 4.01E-06 | 33% | Pass |
| 98 | 20.790 | 6 | 1.20E-05 | 2 | 4.01E-06 | 33% | Pass |
| 99 | 20.989 | 6 | 1.20E-05 | 2 | 4.01E-06 | 33% | Pass |
| 100 | 21.188 | 5 | 1.00E-05 | 2 | 4.01E-06 | 40% | Pass |

# Node 3A

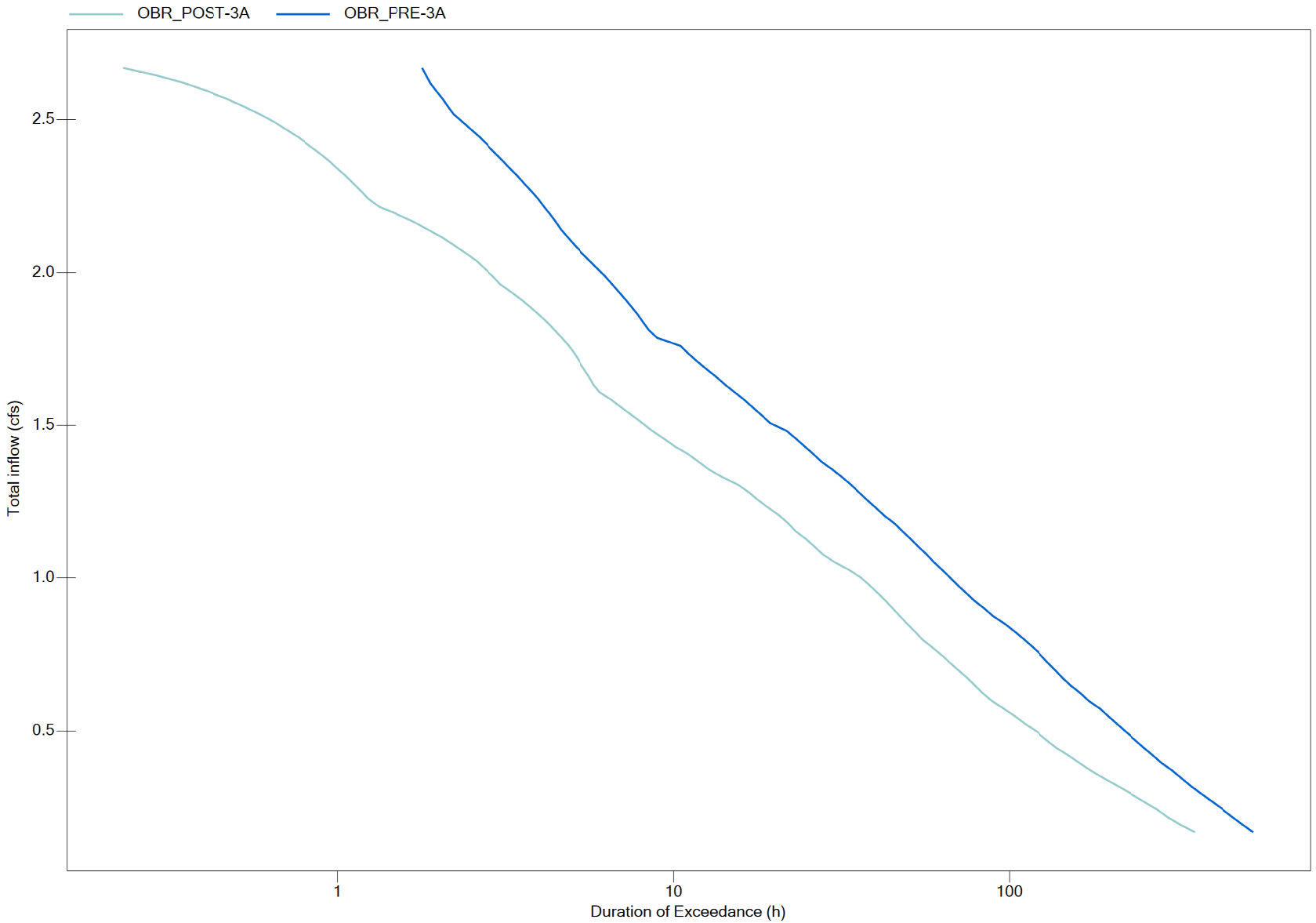
OBR_POST-3A
OBR_PRE-3A
2.5
2.0
1.5
1.0
0.5
Total inflow (cfs)
1
10
100
Duration of Exceedance (h)

**BASIN 3A**

| | | |
|---|---|---|
| **Lower Flow Threshold:** | 10% | |
| **0.1xQ2 (Pre):** | 0.150 | cfs |
| **Q10 (Pre):** | 2.513 | cfs |
| **# of Ordinates:** | 100 | |
| **Incremental Q (Pre):** | 0.02362 | cfs |
| **Total Hourly Data:** | 498244 | hours |

**The proposed BMP:** PASSED

| Interval | Pre-project Flow (cfs) | Pre-project Hours | Pre-project % Time Exceeding | Post-project Hours | Post-project % Time Exceeding | Percentage | Pass/Fail |
|---|---|---|---|---|---|---|---|
| 0 | 0.150 | 479 | 9.61E-04 | 350 | 7.02E-04 | 73% | Pass |
| 1 | 0.174 | 458 | 9.19E-04 | 322 | 6.46E-04 | 70% | Pass |
| 2 | 0.198 | 442 | 8.87E-04 | 297 | 5.96E-04 | 67% | Pass |
| 3 | 0.221 | 416 | 8.35E-04 | 267 | 5.36E-04 | 64% | Pass |
| 4 | 0.245 | 401 | 8.05E-04 | 257 | 5.16E-04 | 64% | Pass |
| 5 | 0.269 | 389 | 7.81E-04 | 242 | 4.86E-04 | 62% | Pass |
| 6 | 0.292 | 351 | 7.04E-04 | 224 | 4.50E-04 | 64% | Pass |
| 7 | 0.316 | 335 | 6.72E-04 | 211 | 4.23E-04 | 63% | Pass |
| 8 | 0.339 | 324 | 6.50E-04 | 196 | 3.93E-04 | 60% | Pass |
| 9 | 0.363 | 312 | 6.26E-04 | 169 | 3.39E-04 | 54% | Pass |
| 10 | 0.387 | 303 | 6.08E-04 | 164 | 3.29E-04 | 54% | Pass |
| 11 | 0.410 | 283 | 5.68E-04 | 151 | 3.03E-04 | 53% | Pass |
| 12 | 0.434 | 273 | 5.48E-04 | 140 | 2.81E-04 | 51% | Pass |
| 13 | 0.458 | 265 | 5.32E-04 | 132 | 2.65E-04 | 50% | Pass |
| 14 | 0.481 | 252 | 5.06E-04 | 125 | 2.51E-04 | 50% | Pass |
| 15 | 0.505 | 242 | 4.86E-04 | 116 | 2.33E-04 | 48% | Pass |
| 16 | 0.528 | 235 | 4.72E-04 | 111 | 2.23E-04 | 47% | Pass |
| 17 | 0.552 | 207 | 4.15E-04 | 105 | 2.11E-04 | 51% | Pass |
| 18 | 0.576 | 198 | 3.97E-04 | 99 | 1.99E-04 | 50% | Pass |
| 19 | 0.599 | 186 | 3.73E-04 | 93 | 1.87E-04 | 50% | Pass |
| 20 | 0.623 | 174 | 3.49E-04 | 85 | 1.71E-04 | 49% | Pass |
| 21 | 0.647 | 167 | 3.35E-04 | 82 | 1.65E-04 | 49% | Pass |
| 22 | 0.670 | 156 | 3.13E-04 | 79 | 1.59E-04 | 51% | Pass |
| 23 | 0.694 | 152 | 3.05E-04 | 75 | 1.51E-04 | 49% | Pass |
| 24 | 0.717 | 149 | 2.99E-04 | 71 | 1.43E-04 | 48% | Pass |
| 25 | 0.741 | 145 | 2.91E-04 | 68 | 1.36E-04 | 47% | Pass |
| 26 | 0.765 | 141 | 2.83E-04 | 65 | 1.30E-04 | 46% | Pass |
| 27 | 0.788 | 135 | 2.71E-04 | 62 | 1.24E-04 | 46% | Pass |
| 28 | 0.812 | 128 | 2.57E-04 | 56 | 1.12E-04 | 44% | Pass |
| 29 | 0.836 | 126 | 2.53E-04 | 54 | 1.08E-04 | 43% | Pass |
| 30 | 0.859 | 120 | 2.41E-04 | 53 | 1.06E-04 | 44% | Pass |
| 31 | 0.883 | 109 | 2.19E-04 | 51 | 1.02E-04 | 47% | Pass |
| 32 | 0.906 | 105 | 2.11E-04 | 49 | 9.83E-05 | 47% | Pass |
| 33 | 0.930 | 104 | 2.09E-04 | 46 | 9.23E-05 | 44% | Pass |
| 34 | 0.954 | 98 | 1.97E-04 | 46 | 9.23E-05 | 47% | Pass |
| 35 | 0.977 | 95 | 1.91E-04 | 45 | 9.03E-05 | 47% | Pass |
| 36 | 1.001 | 93 | 1.87E-04 | 38 | 7.63E-05 | 41% | Pass |
| 37 | 1.025 | 91 | 1.83E-04 | 36 | 7.23E-05 | 40% | Pass |
| 38 | 1.048 | 84 | 1.69E-04 | 31 | 6.22E-05 | 37% | Pass |
| 39 | 1.072 | 83 | 1.67E-04 | 30 | 6.02E-05 | 36% | Pass |
| 40 | 1.095 | 80 | 1.61E-04 | 29 | 5.82E-05 | 36% | Pass |
| 41 | 1.119 | 78 | 1.57E-04 | 27 | 5.42E-05 | 35% | Pass |
| 42 | 1.143 | 71 | 1.43E-04 | 26 | 5.22E-05 | 37% | Pass |
| 43 | 1.166 | 65 | 1.30E-04 | 26 | 5.22E-05 | 40% | Pass |
| 44 | 1.190 | 63 | 1.26E-04 | 26 | 5.22E-05 | 41% | Pass |
| 45 | 1.214 | 59 | 1.18E-04 | 25 | 5.02E-05 | 42% | Pass |
| 46 | 1.237 | 59 | 1.18E-04 | 25 | 5.02E-05 | 42% | Pass |
| 47 | 1.261 | 55 | 1.10E-04 | 22 | 4.42E-05 | 40% | Pass |
| 48 | 1.284 | 52 | 1.04E-04 | 22 | 4.42E-05 | 42% | Pass |
| 49 | 1.308 | 50 | 1.00E-04 | 21 | 4.21E-05 | 42% | Pass |
| 50 | 1.332 | 48 | 9.63E-05 | 21 | 4.21E-05 | 44% | Pass |
| 51 | 1.355 | 45 | 9.03E-05 | 18 | 3.61E-05 | 40% | Pass |
| 52 | 1.379 | 45 | 9.03E-05 | 17 | 3.41E-05 | 38% | Pass |

| | | | | | | | |
|---|---|---|---|---|---|---|---|
| 53 | 1.403 | 40 | 8.03E-05 | 17 | 3.41E-05 | 43% | Pass |
| 54 | 1.426 | 40 | 8.03E-05 | 16 | 3.21E-05 | 40% | Pass |
| 55 | 1.450 | 39 | 7.83E-05 | 14 | 2.81E-05 | 36% | Pass |
| 56 | 1.473 | 38 | 7.63E-05 | 12 | 2.41E-05 | 32% | Pass |
| 57 | 1.497 | 35 | 7.02E-05 | 11 | 2.21E-05 | 31% | Pass |
| 58 | 1.521 | 31 | 6.22E-05 | 10 | 2.01E-05 | 32% | Pass |
| 59 | 1.544 | 30 | 6.02E-05 | 9 | 1.81E-05 | 30% | Pass |
| 60 | 1.568 | 30 | 6.02E-05 | 9 | 1.81E-05 | 30% | Pass |
| 61 | 1.591 | 29 | 5.82E-05 | 9 | 1.81E-05 | 31% | Pass |
| 62 | 1.615 | 29 | 5.82E-05 | 8 | 1.61E-05 | 28% | Pass |
| 63 | 1.639 | 26 | 5.22E-05 | 8 | 1.61E-05 | 31% | Pass |
| 64 | 1.662 | 24 | 4.82E-05 | 7 | 1.40E-05 | 29% | Pass |
| 65 | 1.686 | 23 | 4.62E-05 | 7 | 1.40E-05 | 30% | Pass |
| 66 | 1.710 | 22 | 4.42E-05 | 7 | 1.40E-05 | 32% | Pass |
| 67 | 1.733 | 20 | 4.01E-05 | 6 | 1.20E-05 | 30% | Pass |
| 68 | 1.757 | 18 | 3.61E-05 | 5 | 1.00E-05 | 28% | Pass |
| 69 | 1.780 | 16 | 3.21E-05 | 5 | 1.00E-05 | 31% | Pass |
| 70 | 1.804 | 13 | 2.61E-05 | 5 | 1.00E-05 | 38% | Pass |
| 71 | 1.828 | 12 | 2.41E-05 | 5 | 1.00E-05 | 42% | Pass |
| 72 | 1.851 | 12 | 2.41E-05 | 4 | 8.03E-06 | 33% | Pass |
| 73 | 1.875 | 12 | 2.41E-05 | 4 | 8.03E-06 | 33% | Pass |
| 74 | 1.899 | 12 | 2.41E-05 | 4 | 8.03E-06 | 33% | Pass |
| 75 | 1.922 | 12 | 2.41E-05 | 4 | 8.03E-06 | 33% | Pass |
| 76 | 1.946 | 12 | 2.41E-05 | 4 | 8.03E-06 | 33% | Pass |
| 77 | 1.969 | 12 | 2.41E-05 | 3 | 6.02E-06 | 25% | Pass |
| 78 | 1.993 | 12 | 2.41E-05 | 3 | 6.02E-06 | 25% | Pass |
| 79 | 2.017 | 12 | 2.41E-05 | 3 | 6.02E-06 | 25% | Pass |
| 80 | 2.040 | 11 | 2.21E-05 | 2 | 4.01E-06 | 18% | Pass |
| 81 | 2.064 | 11 | 2.21E-05 | 2 | 4.01E-06 | 18% | Pass |
| 82 | 2.088 | 10 | 2.01E-05 | 2 | 4.01E-06 | 20% | Pass |
| 83 | 2.111 | 9 | 1.81E-05 | 2 | 4.01E-06 | 22% | Pass |
| 84 | 2.135 | 7 | 1.40E-05 | 2 | 4.01E-06 | 29% | Pass |
| 85 | 2.158 | 7 | 1.40E-05 | 2 | 4.01E-06 | 29% | Pass |
| 86 | 2.182 | 7 | 1.40E-05 | 2 | 4.01E-06 | 29% | Pass |
| 87 | 2.206 | 7 | 1.40E-05 | 2 | 4.01E-06 | 29% | Pass |
| 88 | 2.229 | 7 | 1.40E-05 | 2 | 4.01E-06 | 29% | Pass |
| 89 | 2.253 | 7 | 1.40E-05 | 1 | 2.01E-06 | 14% | Pass |
| 90 | 2.277 | 7 | 1.40E-05 | 1 | 2.01E-06 | 14% | Pass |
| 91 | 2.300 | 7 | 1.40E-05 | 1 | 2.01E-06 | 14% | Pass |
| 92 | 2.324 | 7 | 1.40E-05 | 1 | 2.01E-06 | 14% | Pass |
| 93 | 2.347 | 7 | 1.40E-05 | 1 | 2.01E-06 | 14% | Pass |
| 94 | 2.371 | 6 | 1.20E-05 | 1 | 2.01E-06 | 17% | Pass |
| 95 | 2.395 | 6 | 1.20E-05 | 1 | 2.01E-06 | 17% | Pass |
| 96 | 2.418 | 6 | 1.20E-05 | 1 | 2.01E-06 | 17% | Pass |
| 97 | 2.442 | 6 | 1.20E-05 | 1 | 2.01E-06 | 17% | Pass |
| 98 | 2.466 | 6 | 1.20E-05 | 1 | 2.01E-06 | 17% | Pass |
| 99 | 2.489 | 6 | 1.20E-05 | 1 | 2.01E-06 | 17% | Pass |
| 100 | 2.513 | 5 | 1.00E-05 | 1 | 2.01E-06 | 20% | Pass |

# Node 3B

Flow Duration Curve Comparison

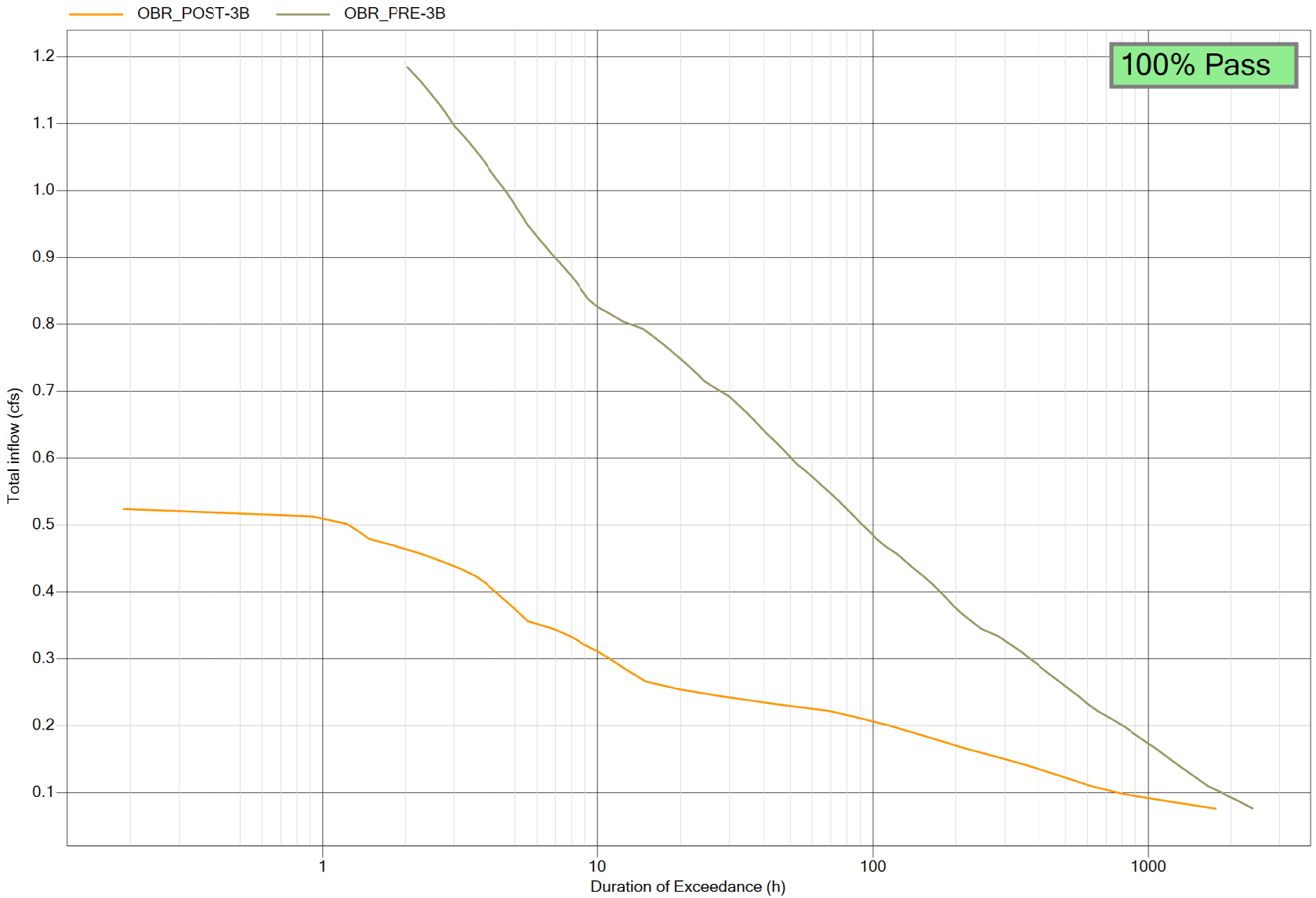

**BASIN 3B**

| | | |
|---|---|---|
| **Lower Flow Threshold:** | 10% | |
| **0.1xQ2 (Pre):** | 0.076 | cfs |
| **Q10 (Pre):** | 1.185 | cfs |
| **# of Ordinates:** | 100 | |
| **Incremental Q (Pre):** | 0.01109 | cfs |
| **Total Hourly Data:** | 498244 | hours |

**The proposed BMP:** **PASSED**

| Interval | Pre-project Flow (cfs) | Pre-project Hours | Pre-project % Time Exceeding | Post-project Hours | Post-project % Time Exceeding | Percentage | Pass/Fail |
|---|---|---|---|---|---|---|---|
| 0 | 0.076 | 2502 | 5.02E-03 | 1867 | 3.75E-03 | 75% | Pass |
| 1 | 0.087 | 2208 | 4.43E-03 | 1309 | 2.63E-03 | 59% | Pass |
| 2 | 0.098 | 1947 | 3.91E-03 | 906 | 1.82E-03 | 47% | Pass |
| 3 | 0.109 | 1637 | 3.29E-03 | 638 | 1.28E-03 | 39% | Pass |
| 4 | 0.121 | 1401 | 2.81E-03 | 494 | 9.91E-04 | 35% | Pass |
| 5 | 0.132 | 1307 | 2.62E-03 | 414 | 8.31E-04 | 32% | Pass |
| 6 | 0.143 | 1241 | 2.49E-03 | 341 | 6.84E-04 | 27% | Pass |
| 7 | 0.154 | 1188 | 2.38E-03 | 286 | 5.74E-04 | 24% | Pass |
| 8 | 0.165 | 1136 | 2.28E-03 | 229 | 4.60E-04 | 20% | Pass |
| 9 | 0.176 | 1066 | 2.14E-03 | 193 | 3.87E-04 | 18% | Pass |
| 10 | 0.187 | 996 | 2.00E-03 | 160 | 3.21E-04 | 16% | Pass |
| 11 | 0.198 | 941 | 1.89E-03 | 134 | 2.69E-04 | 14% | Pass |
| 12 | 0.209 | 880 | 1.77E-03 | 111 | 2.23E-04 | 13% | Pass |
| 13 | 0.220 | 645 | 1.29E-03 | 65 | 1.30E-04 | 10% | Pass |
| 14 | 0.231 | 614 | 1.23E-03 | 40 | 8.03E-05 | 7% | Pass |
| 15 | 0.242 | 597 | 1.20E-03 | 27 | 5.42E-05 | 5% | Pass |
| 16 | 0.254 | 578 | 1.16E-03 | 19 | 3.81E-05 | 3% | Pass |
| 17 | 0.265 | 551 | 1.11E-03 | 13 | 2.61E-05 | 2% | Pass |
| 18 | 0.276 | 519 | 1.04E-03 | 13 | 2.61E-05 | 3% | Pass |
| 19 | 0.287 | 508 | 1.02E-03 | 12 | 2.41E-05 | 2% | Pass |
| 20 | 0.298 | 486 | 9.75E-04 | 11 | 2.21E-05 | 2% | Pass |
| 21 | 0.309 | 462 | 9.27E-04 | 9 | 1.81E-05 | 2% | Pass |
| 22 | 0.320 | 407 | 8.17E-04 | 8 | 1.61E-05 | 2% | Pass |
| 23 | 0.331 | 359 | 7.21E-04 | 8 | 1.61E-05 | 2% | Pass |
| 24 | 0.342 | 288 | 5.78E-04 | 7 | 1.40E-05 | 2% | Pass |
| 25 | 0.353 | 263 | 5.28E-04 | 6 | 1.20E-05 | 2% | Pass |
| 26 | 0.364 | 246 | 4.94E-04 | 6 | 1.20E-05 | 2% | Pass |
| 27 | 0.376 | 227 | 4.56E-04 | 5 | 1.00E-05 | 2% | Pass |
| 28 | 0.387 | 221 | 4.44E-04 | 5 | 1.00E-05 | 2% | Pass |
| 29 | 0.398 | 216 | 4.34E-04 | 5 | 1.00E-05 | 2% | Pass |
| 30 | 0.409 | 213 | 4.28E-04 | 4 | 8.03E-06 | 2% | Pass |
| 31 | 0.420 | 205 | 4.11E-04 | 4 | 8.03E-06 | 2% | Pass |
| 32 | 0.431 | 186 | 3.73E-04 | 3 | 6.02E-06 | 2% | Pass |
| 33 | 0.442 | 177 | 3.55E-04 | 3 | 6.02E-06 | 2% | Pass |
| 34 | 0.453 | 163 | 3.27E-04 | 3 | 6.02E-06 | 2% | Pass |
| 35 | 0.464 | 149 | 2.99E-04 | 3 | 6.02E-06 | 2% | Pass |
| 36 | 0.475 | 129 | 2.59E-04 | 3 | 6.02E-06 | 2% | Pass |
| 37 | 0.486 | 128 | 2.57E-04 | 2 | 4.01E-06 | 2% | Pass |
| 38 | 0.497 | 126 | 2.53E-04 | 2 | 4.01E-06 | 2% | Pass |
| 39 | 0.509 | 121 | 2.43E-04 | 2 | 4.01E-06 | 2% | Pass |
| 40 | 0.520 | 115 | 2.31E-04 | 1 | 2.01E-06 | 1% | Pass |
| 41 | 0.531 | 108 | 2.17E-04 | 0 | 0.00E+00 | 0% | Pass |
| 42 | 0.542 | 106 | 2.13E-04 | 0 | 0.00E+00 | 0% | Pass |
| 43 | 0.553 | 104 | 2.09E-04 | 0 | 0.00E+00 | 0% | Pass |
| 44 | 0.564 | 100 | 2.01E-04 | 0 | 0.00E+00 | 0% | Pass |
| 45 | 0.575 | 92 | 1.85E-04 | 0 | 0.00E+00 | 0% | Pass |
| 46 | 0.586 | 80 | 1.61E-04 | 0 | 0.00E+00 | 0% | Pass |
| 47 | 0.597 | 70 | 1.40E-04 | 0 | 0.00E+00 | 0% | Pass |
| 48 | 0.608 | 68 | 1.36E-04 | 0 | 0.00E+00 | 0% | Pass |
| 49 | 0.619 | 67 | 1.34E-04 | 0 | 0.00E+00 | 0% | Pass |
| 50 | 0.631 | 65 | 1.30E-04 | 0 | 0.00E+00 | 0% | Pass |
| 51 | 0.642 | 62 | 1.24E-04 | 0 | 0.00E+00 | 0% | Pass |
| 52 | 0.653 | 60 | 1.20E-04 | 0 | 0.00E+00 | 0% | Pass |

| | | | | | | | |
|---|---|---|---|---|---|---|---|
| 53 | 0.664 | 60 | 1.20E-04 | 0 | 0.00E+00 | 0% | Pass |
| 54 | 0.675 | 60 | 1.20E-04 | 0 | 0.00E+00 | 0% | Pass |
| 55 | 0.686 | 59 | 1.18E-04 | 0 | 0.00E+00 | 0% | Pass |
| 56 | 0.697 | 57 | 1.14E-04 | 0 | 0.00E+00 | 0% | Pass |
| 57 | 0.708 | 50 | 1.00E-04 | 0 | 0.00E+00 | 0% | Pass |
| 58 | 0.719 | 40 | 8.03E-05 | 0 | 0.00E+00 | 0% | Pass |
| 59 | 0.730 | 39 | 7.83E-05 | 0 | 0.00E+00 | 0% | Pass |
| 60 | 0.741 | 39 | 7.83E-05 | 0 | 0.00E+00 | 0% | Pass |
| 61 | 0.752 | 39 | 7.83E-05 | 0 | 0.00E+00 | 0% | Pass |
| 62 | 0.764 | 35 | 7.02E-05 | 0 | 0.00E+00 | 0% | Pass |
| 63 | 0.775 | 35 | 7.02E-05 | 0 | 0.00E+00 | 0% | Pass |
| 64 | 0.786 | 34 | 6.82E-05 | 0 | 0.00E+00 | 0% | Pass |
| 65 | 0.797 | 34 | 6.82E-05 | 0 | 0.00E+00 | 0% | Pass |
| 66 | 0.808 | 31 | 6.22E-05 | 0 | 0.00E+00 | 0% | Pass |
| 67 | 0.819 | 31 | 6.22E-05 | 0 | 0.00E+00 | 0% | Pass |
| 68 | 0.830 | 16 | 3.21E-05 | 0 | 0.00E+00 | 0% | Pass |
| 69 | 0.841 | 15 | 3.01E-05 | 0 | 0.00E+00 | 0% | Pass |
| 70 | 0.852 | 15 | 3.01E-05 | 0 | 0.00E+00 | 0% | Pass |
| 71 | 0.863 | 15 | 3.01E-05 | 0 | 0.00E+00 | 0% | Pass |
| 72 | 0.874 | 15 | 3.01E-05 | 0 | 0.00E+00 | 0% | Pass |
| 73 | 0.886 | 15 | 3.01E-05 | 0 | 0.00E+00 | 0% | Pass |
| 74 | 0.897 | 15 | 3.01E-05 | 0 | 0.00E+00 | 0% | Pass |
| 75 | 0.908 | 14 | 2.81E-05 | 0 | 0.00E+00 | 0% | Pass |
| 76 | 0.919 | 12 | 2.41E-05 | 0 | 0.00E+00 | 0% | Pass |
| 77 | 0.930 | 12 | 2.41E-05 | 0 | 0.00E+00 | 0% | Pass |
| 78 | 0.941 | 10 | 2.01E-05 | 0 | 0.00E+00 | 0% | Pass |
| 79 | 0.952 | 8 | 1.61E-05 | 0 | 0.00E+00 | 0% | Pass |
| 80 | 0.963 | 8 | 1.61E-05 | 0 | 0.00E+00 | 0% | Pass |
| 81 | 0.974 | 8 | 1.61E-05 | 0 | 0.00E+00 | 0% | Pass |
| 82 | 0.985 | 8 | 1.61E-05 | 0 | 0.00E+00 | 0% | Pass |
| 83 | 0.996 | 8 | 1.61E-05 | 0 | 0.00E+00 | 0% | Pass |
| 84 | 1.007 | 8 | 1.61E-05 | 0 | 0.00E+00 | 0% | Pass |
| 85 | 1.019 | 8 | 1.61E-05 | 0 | 0.00E+00 | 0% | Pass |
| 86 | 1.030 | 8 | 1.61E-05 | 0 | 0.00E+00 | 0% | Pass |
| 87 | 1.041 | 7 | 1.40E-05 | 0 | 0.00E+00 | 0% | Pass |
| 88 | 1.052 | 7 | 1.40E-05 | 0 | 0.00E+00 | 0% | Pass |
| 89 | 1.063 | 7 | 1.40E-05 | 0 | 0.00E+00 | 0% | Pass |
| 90 | 1.074 | 7 | 1.40E-05 | 0 | 0.00E+00 | 0% | Pass |
| 91 | 1.085 | 7 | 1.40E-05 | 0 | 0.00E+00 | 0% | Pass |
| 92 | 1.096 | 7 | 1.40E-05 | 0 | 0.00E+00 | 0% | Pass |
| 93 | 1.107 | 6 | 1.20E-05 | 0 | 0.00E+00 | 0% | Pass |
| 94 | 1.118 | 6 | 1.20E-05 | 0 | 0.00E+00 | 0% | Pass |
| 95 | 1.129 | 6 | 1.20E-05 | 0 | 0.00E+00 | 0% | Pass |
| 96 | 1.141 | 6 | 1.20E-05 | 0 | 0.00E+00 | 0% | Pass |
| 97 | 1.152 | 6 | 1.20E-05 | 0 | 0.00E+00 | 0% | Pass |
| 98 | 1.163 | 6 | 1.20E-05 | 0 | 0.00E+00 | 0% | Pass |
| 99 | 1.174 | 6 | 1.20E-05 | 0 | 0.00E+00 | 0% | Pass |
| 100 | 1.185 | 5 | 1.00E-05 | 0 | 0.00E+00 | 0% | Pass |

# Node 3C

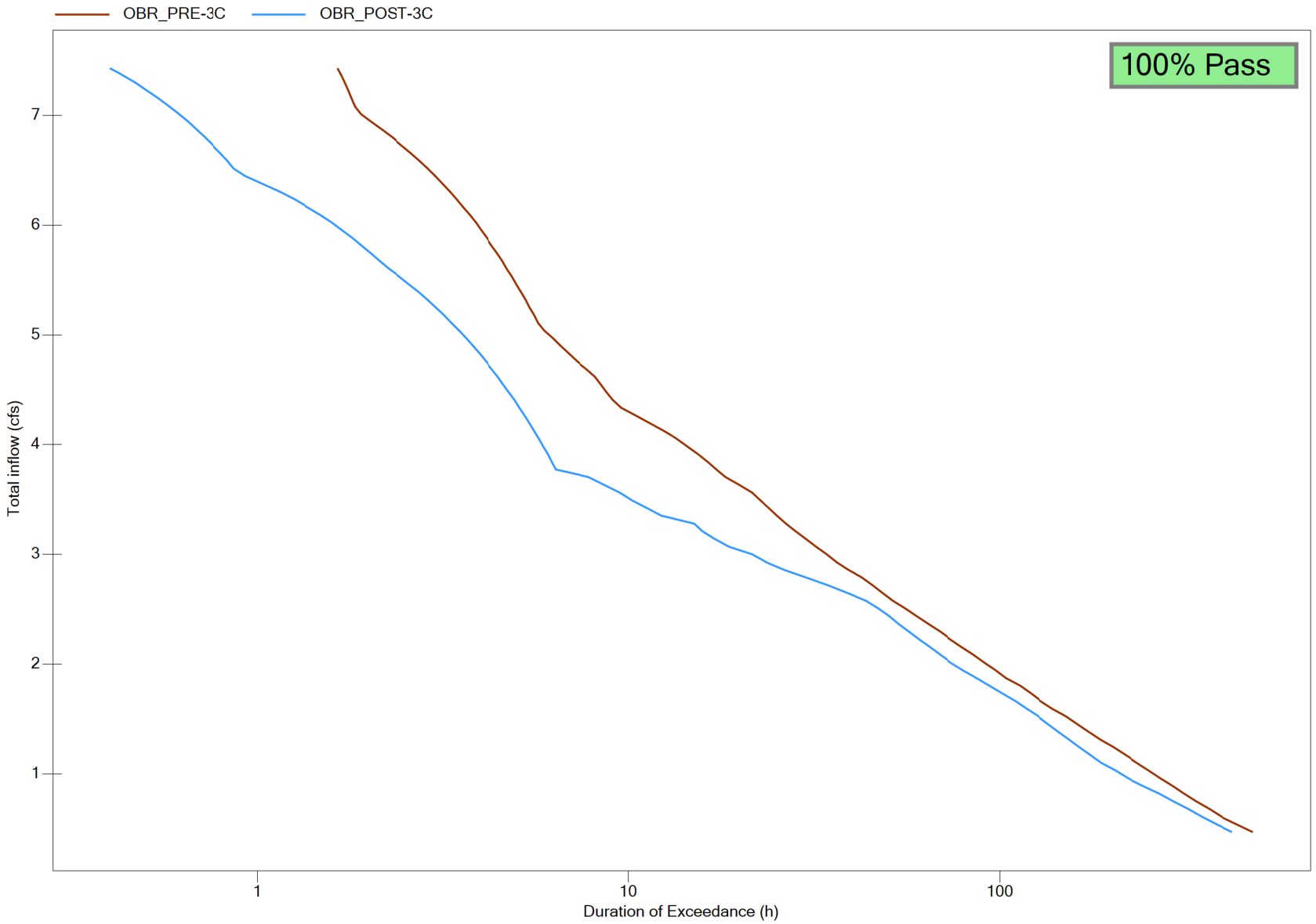
OBR_PRE-3C
OBR_POST-3C
100% Pass
Total inflow (cfs)
7
6
5
4
3
2
1
1
10
100
Duration of Exceedance (h)

**BASIN 3C**

| | | |
|---|---|---|
| **Lower Flow Threshold:** | 10% | |
| **0.1xQ2 (Pre):** | 0.291 | cfs |
| **Q10 (Pre):** | 5.191 | cfs |
| **# of Ordinates:** | 100 | |
| **Incremental Q (Pre):** | 0.04900 | cfs |
| **Total Hourly Data:** | 498244 | hours |

**The proposed BMP:** PASSED

| Interval | Pre-project Flow (cfs) | Pre-project Hours | Pre-project % Time Exceeding | Post-project Hours | Post-project % Time Exceeding | Percentage | Pass/Fail |
|---|---|---|---|---|---|---|---|
| 0 | 0.291 | 613 | 1.23E-03 | 506 | 1.02E-03 | 83% | Pass |
| 1 | 0.340 | 594 | 1.19E-03 | 472 | 9.47E-04 | 79% | Pass |
| 2 | 0.389 | 579 | 1.16E-03 | 451 | 9.05E-04 | 78% | Pass |
| 3 | 0.438 | 571 | 1.15E-03 | 425 | 8.53E-04 | 74% | Pass |
| 4 | 0.487 | 552 | 1.11E-03 | 397 | 7.97E-04 | 72% | Pass |
| 5 | 0.536 | 539 | 1.08E-03 | 371 | 7.45E-04 | 69% | Pass |
| 6 | 0.585 | 523 | 1.05E-03 | 350 | 7.02E-04 | 67% | Pass |
| 7 | 0.634 | 511 | 1.03E-03 | 333 | 6.68E-04 | 65% | Pass |
| 8 | 0.683 | 491 | 9.85E-04 | 316 | 6.34E-04 | 64% | Pass |
| 9 | 0.732 | 461 | 9.25E-04 | 298 | 5.98E-04 | 65% | Pass |
| 10 | 0.781 | 445 | 8.93E-04 | 283 | 5.68E-04 | 64% | Pass |
| 11 | 0.830 | 425 | 8.53E-04 | 259 | 5.20E-04 | 61% | Pass |
| 12 | 0.879 | 417 | 8.37E-04 | 243 | 4.88E-04 | 58% | Pass |
| 13 | 0.928 | 393 | 7.89E-04 | 226 | 4.54E-04 | 58% | Pass |
| 14 | 0.977 | 376 | 7.55E-04 | 217 | 4.36E-04 | 58% | Pass |
| 15 | 1.026 | 366 | 7.35E-04 | 201 | 4.03E-04 | 55% | Pass |
| 16 | 1.075 | 355 | 7.13E-04 | 188 | 3.77E-04 | 53% | Pass |
| 17 | 1.124 | 327 | 6.56E-04 | 178 | 3.57E-04 | 54% | Pass |
| 18 | 1.173 | 319 | 6.40E-04 | 175 | 3.51E-04 | 55% | Pass |
| 19 | 1.222 | 314 | 6.30E-04 | 168 | 3.37E-04 | 54% | Pass |
| 20 | 1.271 | 307 | 6.16E-04 | 162 | 3.25E-04 | 53% | Pass |
| 21 | 1.320 | 301 | 6.04E-04 | 157 | 3.15E-04 | 52% | Pass |
| 22 | 1.369 | 288 | 5.78E-04 | 153 | 3.07E-04 | 53% | Pass |
| 23 | 1.418 | 285 | 5.72E-04 | 145 | 2.91E-04 | 51% | Pass |
| 24 | 1.467 | 279 | 5.60E-04 | 142 | 2.85E-04 | 51% | Pass |
| 25 | 1.516 | 269 | 5.40E-04 | 131 | 2.63E-04 | 49% | Pass |
| 26 | 1.565 | 261 | 5.24E-04 | 126 | 2.53E-04 | 48% | Pass |
| 27 | 1.614 | 252 | 5.06E-04 | 121 | 2.43E-04 | 48% | Pass |
| 28 | 1.663 | 238 | 4.78E-04 | 114 | 2.29E-04 | 48% | Pass |
| 29 | 1.712 | 223 | 4.48E-04 | 109 | 2.19E-04 | 49% | Pass |
| 30 | 1.761 | 208 | 4.17E-04 | 103 | 2.07E-04 | 50% | Pass |
| 31 | 1.810 | 189 | 3.79E-04 | 99 | 1.99E-04 | 52% | Pass |
| 32 | 1.859 | 180 | 3.61E-04 | 95 | 1.91E-04 | 53% | Pass |
| 33 | 1.908 | 171 | 3.43E-04 | 90 | 1.81E-04 | 53% | Pass |
| 34 | 1.957 | 166 | 3.33E-04 | 89 | 1.79E-04 | 54% | Pass |
| 35 | 2.006 | 164 | 3.29E-04 | 85 | 1.71E-04 | 52% | Pass |
| 36 | 2.055 | 161 | 3.23E-04 | 82 | 1.65E-04 | 51% | Pass |
| 37 | 2.104 | 160 | 3.21E-04 | 76 | 1.53E-04 | 48% | Pass |
| 38 | 2.153 | 159 | 3.19E-04 | 73 | 1.47E-04 | 46% | Pass |
| 39 | 2.202 | 158 | 3.17E-04 | 71 | 1.43E-04 | 45% | Pass |
| 40 | 2.251 | 148 | 2.97E-04 | 69 | 1.38E-04 | 47% | Pass |
| 41 | 2.300 | 143 | 2.87E-04 | 67 | 1.34E-04 | 47% | Pass |
| 42 | 2.349 | 141 | 2.83E-04 | 64 | 1.28E-04 | 45% | Pass |
| 43 | 2.398 | 140 | 2.81E-04 | 59 | 1.18E-04 | 42% | Pass |
| 44 | 2.447 | 139 | 2.79E-04 | 58 | 1.16E-04 | 42% | Pass |
| 45 | 2.496 | 137 | 2.75E-04 | 55 | 1.10E-04 | 40% | Pass |
| 46 | 2.545 | 135 | 2.71E-04 | 53 | 1.06E-04 | 39% | Pass |
| 47 | 2.594 | 129 | 2.59E-04 | 52 | 1.04E-04 | 40% | Pass |
| 48 | 2.643 | 125 | 2.51E-04 | 49 | 9.83E-05 | 39% | Pass |
| 49 | 2.692 | 115 | 2.31E-04 | 46 | 9.23E-05 | 40% | Pass |
| 50 | 2.741 | 104 | 2.09E-04 | 45 | 9.03E-05 | 43% | Pass |
| 51 | 2.790 | 101 | 2.03E-04 | 42 | 8.43E-05 | 42% | Pass |
| 52 | 2.839 | 99 | 1.99E-04 | 40 | 8.03E-05 | 40% | Pass |
| 53 | 2.888 | 96 | 1.93E-04 | 37 | 7.43E-05 | 39% | Pass |

| | | | | | | | |
|---|---|---|---|---|---|---|---|
| 54 | 2.937 | 96 | 1.93E-04 | 36 | 7.23E-05 | 38% | Pass |
| 55 | 2.986 | 93 | 1.87E-04 | 34 | 6.82E-05 | 37% | Pass |
| 56 | 3.035 | 92 | 1.85E-04 | 31 | 6.22E-05 | 34% | Pass |
| 57 | 3.084 | 88 | 1.77E-04 | 31 | 6.22E-05 | 35% | Pass |
| 58 | 3.133 | 88 | 1.77E-04 | 29 | 5.82E-05 | 33% | Pass |
| 59 | 3.182 | 88 | 1.77E-04 | 27 | 5.42E-05 | 31% | Pass |
| 60 | 3.231 | 88 | 1.77E-04 | 25 | 5.02E-05 | 28% | Pass |
| 61 | 3.280 | 86 | 1.73E-04 | 25 | 5.02E-05 | 29% | Pass |
| 62 | 3.329 | 81 | 1.63E-04 | 24 | 4.82E-05 | 30% | Pass |
| 63 | 3.378 | 81 | 1.63E-04 | 24 | 4.82E-05 | 30% | Pass |
| 64 | 3.427 | 77 | 1.55E-04 | 20 | 4.01E-05 | 26% | Pass |
| 65 | 3.476 | 73 | 1.47E-04 | 17 | 3.41E-05 | 23% | Pass |
| 66 | 3.525 | 71 | 1.43E-04 | 17 | 3.41E-05 | 24% | Pass |
| 67 | 3.574 | 69 | 1.38E-04 | 15 | 3.01E-05 | 22% | Pass |
| 68 | 3.623 | 61 | 1.22E-04 | 15 | 3.01E-05 | 25% | Pass |
| 69 | 3.672 | 58 | 1.16E-04 | 10 | 2.01E-05 | 17% | Pass |
| 70 | 3.721 | 58 | 1.16E-04 | 9 | 1.81E-05 | 16% | Pass |
| 71 | 3.770 | 57 | 1.14E-04 | 9 | 1.81E-05 | 16% | Pass |
| 72 | 3.819 | 56 | 1.12E-04 | 8 | 1.61E-05 | 14% | Pass |
| 73 | 3.868 | 55 | 1.10E-04 | 8 | 1.61E-05 | 15% | Pass |
| 74 | 3.917 | 54 | 1.08E-04 | 8 | 1.61E-05 | 15% | Pass |
| 75 | 3.966 | 52 | 1.04E-04 | 7 | 1.40E-05 | 13% | Pass |
| 76 | 4.015 | 50 | 1.00E-04 | 7 | 1.40E-05 | 14% | Pass |
| 77 | 4.064 | 50 | 1.00E-04 | 7 | 1.40E-05 | 14% | Pass |
| 78 | 4.113 | 49 | 9.83E-05 | 7 | 1.40E-05 | 14% | Pass |
| 79 | 4.162 | 48 | 9.63E-05 | 6 | 1.20E-05 | 13% | Pass |
| 80 | 4.211 | 47 | 9.43E-05 | 5 | 1.00E-05 | 11% | Pass |
| 81 | 4.260 | 47 | 9.43E-05 | 5 | 1.00E-05 | 11% | Pass |
| 82 | 4.309 | 47 | 9.43E-05 | 5 | 1.00E-05 | 11% | Pass |
| 83 | 4.358 | 45 | 9.03E-05 | 5 | 1.00E-05 | 11% | Pass |
| 84 | 4.407 | 42 | 8.43E-05 | 5 | 1.00E-05 | 12% | Pass |
| 85 | 4.456 | 40 | 8.03E-05 | 5 | 1.00E-05 | 13% | Pass |
| 86 | 4.505 | 39 | 7.83E-05 | 5 | 1.00E-05 | 13% | Pass |
| 87 | 4.554 | 34 | 6.82E-05 | 5 | 1.00E-05 | 15% | Pass |
| 88 | 4.603 | 34 | 6.82E-05 | 5 | 1.00E-05 | 15% | Pass |
| 89 | 4.652 | 34 | 6.82E-05 | 5 | 1.00E-05 | 15% | Pass |
| 90 | 4.701 | 33 | 6.62E-05 | 5 | 1.00E-05 | 15% | Pass |
| 91 | 4.750 | 30 | 6.02E-05 | 5 | 1.00E-05 | 17% | Pass |
| 92 | 4.799 | 29 | 5.82E-05 | 5 | 1.00E-05 | 17% | Pass |
| 93 | 4.848 | 29 | 5.82E-05 | 5 | 1.00E-05 | 17% | Pass |
| 94 | 4.897 | 29 | 5.82E-05 | 5 | 1.00E-05 | 17% | Pass |
| 95 | 4.946 | 28 | 5.62E-05 | 5 | 1.00E-05 | 18% | Pass |
| 96 | 4.995 | 26 | 5.22E-05 | 5 | 1.00E-05 | 19% | Pass |
| 97 | 5.044 | 26 | 5.22E-05 | 5 | 1.00E-05 | 19% | Pass |
| 98 | 5.093 | 26 | 5.22E-05 | 5 | 1.00E-05 | 19% | Pass |
| 99 | 5.142 | 26 | 5.22E-05 | 4 | 8.03E-06 | 15% | Pass |
| 100 | 5.191 | 26 | 5.22E-05 | 3 | 6.02E-06 | 12% | Pass |

# Node 3D

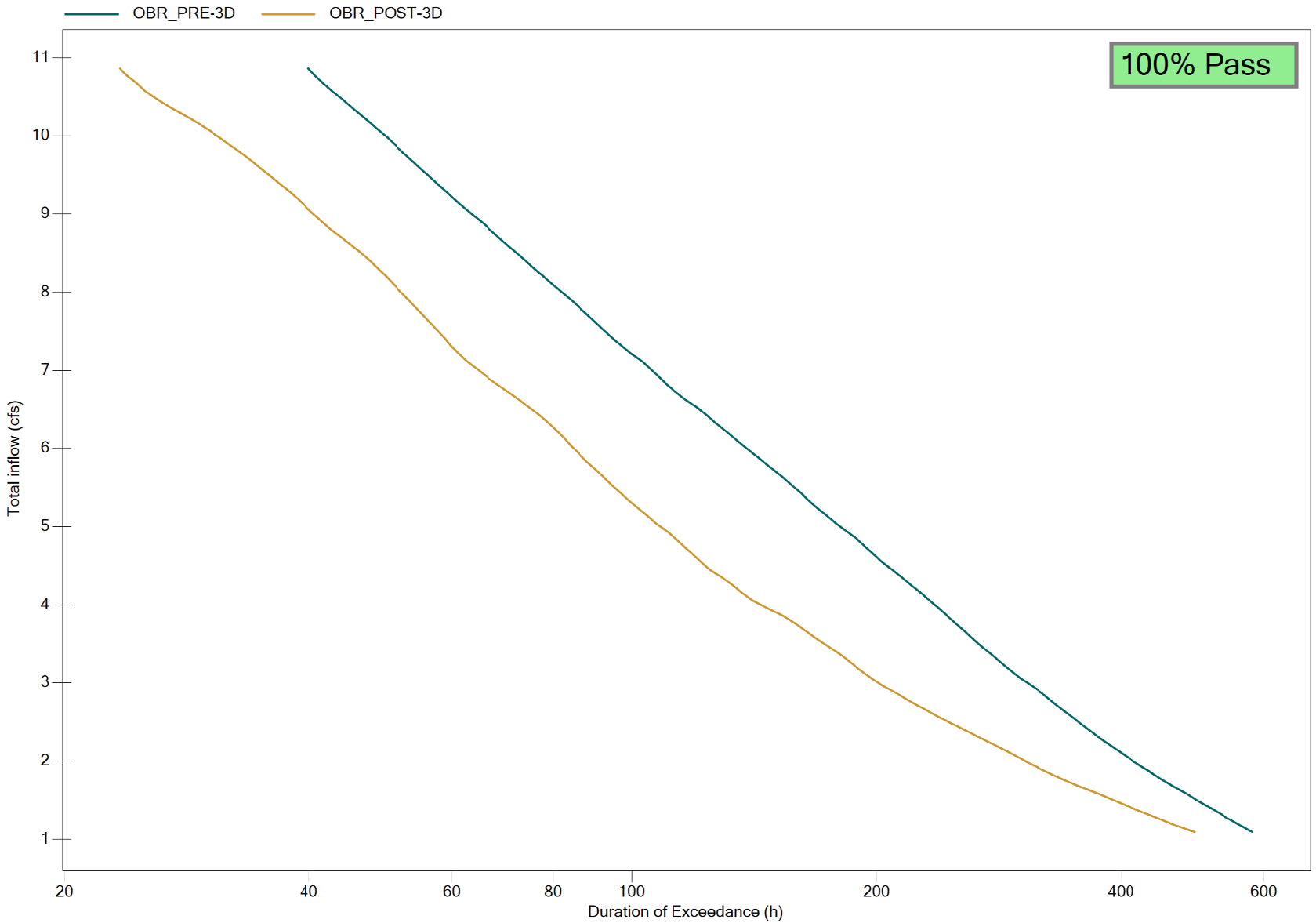
OBR_PRE-3D
OBR_POST-3D
100% Pass
Total inflow (cfs)
11
10
9
8
7
6
5
4
3
2
1
20
40
60
80
100
200
400
600
Duration of Exceedance (h)

**BASIN 3d**

| | | |
|---|---|---|
| **Lower Flow Threshold:** | 10% | |
| **0.1xQ2 (Pre):** | 1.087 | cfs |
| **Q10 (Pre):** | 20.615 | cfs |
| **# of Ordinates:** | 100 | |
| **Incremental Q (Pre):** | 0.19528 | cfs |
| **Total Hourly Data:** | 498244 | hours |

**The proposed BMP:** PASSED

| Interval | Pre-project Flow (cfs) | Pre-project Hours | Pre-project % Time Exceeding | Post-project Hours | Post-project % Time Exceeding | Percentage | Pass/Fail |
|---|---|---|---|---|---|---|---|
| 0 | 1.087 | 542 | 1.09E-03 | 491 | 9.85E-04 | 91% | Pass |
| 1 | 1.282 | 514 | 1.03E-03 | 446 | 8.95E-04 | 87% | Pass |
| 2 | 1.478 | 482 | 9.67E-04 | 387 | 7.77E-04 | 80% | Pass |
| 3 | 1.673 | 445 | 8.93E-04 | 357 | 7.17E-04 | 80% | Pass |
| 4 | 1.868 | 422 | 8.47E-04 | 330 | 6.62E-04 | 78% | Pass |
| 5 | 2.064 | 397 | 7.97E-04 | 304 | 6.10E-04 | 77% | Pass |
| 6 | 2.259 | 376 | 7.55E-04 | 282 | 5.66E-04 | 75% | Pass |
| 7 | 2.454 | 340 | 6.82E-04 | 254 | 5.10E-04 | 75% | Pass |
| 8 | 2.649 | 327 | 6.56E-04 | 231 | 4.64E-04 | 71% | Pass |
| 9 | 2.845 | 319 | 6.40E-04 | 210 | 4.21E-04 | 66% | Pass |
| 10 | 3.040 | 299 | 6.00E-04 | 199 | 3.99E-04 | 67% | Pass |
| 11 | 3.235 | 287 | 5.76E-04 | 186 | 3.73E-04 | 65% | Pass |
| 12 | 3.430 | 277 | 5.56E-04 | 174 | 3.49E-04 | 63% | Pass |
| 13 | 3.626 | 263 | 5.28E-04 | 166 | 3.33E-04 | 63% | Pass |
| 14 | 3.821 | 252 | 5.06E-04 | 157 | 3.15E-04 | 62% | Pass |
| 15 | 4.016 | 240 | 4.82E-04 | 148 | 2.97E-04 | 62% | Pass |
| 16 | 4.212 | 225 | 4.52E-04 | 135 | 2.71E-04 | 60% | Pass |
| 17 | 4.407 | 211 | 4.23E-04 | 125 | 2.51E-04 | 59% | Pass |
| 18 | 4.602 | 197 | 3.95E-04 | 119 | 2.39E-04 | 60% | Pass |
| 19 | 4.797 | 193 | 3.87E-04 | 115 | 2.31E-04 | 60% | Pass |
| 20 | 4.993 | 183 | 3.67E-04 | 108 | 2.17E-04 | 59% | Pass |
| 21 | 5.188 | 174 | 3.49E-04 | 104 | 2.09E-04 | 60% | Pass |
| 22 | 5.383 | 168 | 3.37E-04 | 103 | 2.07E-04 | 61% | Pass |
| 23 | 5.579 | 162 | 3.25E-04 | 98 | 1.97E-04 | 60% | Pass |
| 24 | 5.774 | 154 | 3.09E-04 | 95 | 1.91E-04 | 62% | Pass |
| 25 | 5.969 | 151 | 3.03E-04 | 90 | 1.81E-04 | 60% | Pass |
| 26 | 6.164 | 145 | 2.91E-04 | 83 | 1.67E-04 | 57% | Pass |
| 27 | 6.360 | 137 | 2.75E-04 | 78 | 1.57E-04 | 57% | Pass |
| 28 | 6.555 | 132 | 2.65E-04 | 74 | 1.49E-04 | 56% | Pass |
| 29 | 6.750 | 127 | 2.55E-04 | 72 | 1.45E-04 | 57% | Pass |
| 30 | 6.946 | 121 | 2.43E-04 | 67 | 1.34E-04 | 55% | Pass |
| 31 | 7.141 | 116 | 2.33E-04 | 64 | 1.28E-04 | 55% | Pass |
| 32 | 7.336 | 113 | 2.27E-04 | 61 | 1.22E-04 | 54% | Pass |
| 33 | 7.531 | 107 | 2.15E-04 | 58 | 1.16E-04 | 54% | Pass |
| 34 | 7.727 | 103 | 2.07E-04 | 58 | 1.16E-04 | 56% | Pass |
| 35 | 7.922 | 99 | 1.99E-04 | 55 | 1.10E-04 | 56% | Pass |
| 36 | 8.117 | 97 | 1.95E-04 | 54 | 1.08E-04 | 56% | Pass |
| 37 | 8.312 | 86 | 1.73E-04 | 52 | 1.04E-04 | 60% | Pass |
| 38 | 8.508 | 79 | 1.59E-04 | 49 | 9.83E-05 | 62% | Pass |
| 39 | 8.703 | 75 | 1.51E-04 | 47 | 9.43E-05 | 63% | Pass |
| 40 | 8.898 | 73 | 1.47E-04 | 43 | 8.63E-05 | 59% | Pass |
| 41 | 9.094 | 70 | 1.40E-04 | 42 | 8.43E-05 | 60% | Pass |
| 42 | 9.289 | 67 | 1.34E-04 | 37 | 7.43E-05 | 55% | Pass |
| 43 | 9.484 | 64 | 1.28E-04 | 36 | 7.23E-05 | 56% | Pass |
| 44 | 9.679 | 61 | 1.22E-04 | 35 | 7.02E-05 | 57% | Pass |
| 45 | 9.875 | 56 | 1.12E-04 | 32 | 6.42E-05 | 57% | Pass |
| 46 | 10.070 | 51 | 1.02E-04 | 31 | 6.22E-05 | 61% | Pass |
| 47 | 10.265 | 50 | 1.00E-04 | 30 | 6.02E-05 | 60% | Pass |
| 48 | 10.461 | 49 | 9.83E-05 | 28 | 5.62E-05 | 57% | Pass |
| 49 | 10.656 | 48 | 9.63E-05 | 26 | 5.22E-05 | 54% | Pass |
| 50 | 10.851 | 45 | 9.03E-05 | 25 | 5.02E-05 | 56% | Pass |
| 51 | 11.046 | 44 | 8.83E-05 | 24 | 4.82E-05 | 55% | Pass |
| 52 | 11.242 | 44 | 8.83E-05 | 23 | 4.62E-05 | 52% | Pass |

| | | | | | | | |
|---|---|---|---|---|---|---|---|
| 53 | 11.437 | 43 | 8.63E-05 | 22 | 4.42E-05 | 51% | Pass |
| 54 | 11.632 | 42 | 8.43E-05 | 21 | 4.21E-05 | 50% | Pass |
| 55 | 11.828 | 39 | 7.83E-05 | 20 | 4.01E-05 | 51% | Pass |
| 56 | 12.023 | 39 | 7.83E-05 | 20 | 4.01E-05 | 51% | Pass |
| 57 | 12.218 | 38 | 7.63E-05 | 18 | 3.61E-05 | 47% | Pass |
| 58 | 12.413 | 38 | 7.63E-05 | 18 | 3.61E-05 | 47% | Pass |
| 59 | 12.609 | 35 | 7.02E-05 | 18 | 3.61E-05 | 51% | Pass |
| 60 | 12.804 | 33 | 6.62E-05 | 17 | 3.41E-05 | 52% | Pass |
| 61 | 12.999 | 29 | 5.82E-05 | 17 | 3.41E-05 | 59% | Pass |
| 62 | 13.195 | 29 | 5.82E-05 | 17 | 3.41E-05 | 59% | Pass |
| 63 | 13.390 | 29 | 5.82E-05 | 17 | 3.41E-05 | 59% | Pass |
| 64 | 13.585 | 29 | 5.82E-05 | 17 | 3.41E-05 | 59% | Pass |
| 65 | 13.780 | 28 | 5.62E-05 | 13 | 2.61E-05 | 46% | Pass |
| 66 | 13.976 | 26 | 5.22E-05 | 13 | 2.61E-05 | 50% | Pass |
| 67 | 14.171 | 25 | 5.02E-05 | 11 | 2.21E-05 | 44% | Pass |
| 68 | 14.366 | 24 | 4.82E-05 | 11 | 2.21E-05 | 46% | Pass |
| 69 | 14.561 | 23 | 4.62E-05 | 10 | 2.01E-05 | 43% | Pass |
| 70 | 14.757 | 22 | 4.42E-05 | 10 | 2.01E-05 | 45% | Pass |
| 71 | 14.952 | 22 | 4.42E-05 | 10 | 2.01E-05 | 45% | Pass |
| 72 | 15.147 | 22 | 4.42E-05 | 10 | 2.01E-05 | 45% | Pass |
| 73 | 15.343 | 20 | 4.01E-05 | 10 | 2.01E-05 | 50% | Pass |
| 74 | 15.538 | 20 | 4.01E-05 | 10 | 2.01E-05 | 50% | Pass |
| 75 | 15.733 | 19 | 3.81E-05 | 10 | 2.01E-05 | 53% | Pass |
| 76 | 15.928 | 18 | 3.61E-05 | 10 | 2.01E-05 | 56% | Pass |
| 77 | 16.124 | 17 | 3.41E-05 | 10 | 2.01E-05 | 59% | Pass |
| 78 | 16.319 | 15 | 3.01E-05 | 10 | 2.01E-05 | 67% | Pass |
| 79 | 16.514 | 14 | 2.81E-05 | 10 | 2.01E-05 | 71% | Pass |
| 80 | 16.710 | 14 | 2.81E-05 | 10 | 2.01E-05 | 71% | Pass |
| 81 | 16.905 | 14 | 2.81E-05 | 10 | 2.01E-05 | 71% | Pass |
| 82 | 17.100 | 14 | 2.81E-05 | 10 | 2.01E-05 | 71% | Pass |
| 83 | 17.295 | 13 | 2.61E-05 | 10 | 2.01E-05 | 77% | Pass |
| 84 | 17.491 | 11 | 2.21E-05 | 9 | 1.81E-05 | 82% | Pass |
| 85 | 17.686 | 10 | 2.01E-05 | 6 | 1.20E-05 | 60% | Pass |
| 86 | 17.881 | 10 | 2.01E-05 | 6 | 1.20E-05 | 60% | Pass |
| 87 | 18.077 | 10 | 2.01E-05 | 6 | 1.20E-05 | 60% | Pass |
| 88 | 18.272 | 9 | 1.81E-05 | 5 | 1.00E-05 | 56% | Pass |
| 89 | 18.467 | 8 | 1.61E-05 | 5 | 1.00E-05 | 63% | Pass |
| 90 | 18.662 | 8 | 1.61E-05 | 3 | 6.02E-06 | 38% | Pass |
| 91 | 18.858 | 8 | 1.61E-05 | 3 | 6.02E-06 | 38% | Pass |
| 92 | 19.053 | 8 | 1.61E-05 | 3 | 6.02E-06 | 38% | Pass |
| 93 | 19.248 | 8 | 1.61E-05 | 3 | 6.02E-06 | 38% | Pass |
| 94 | 19.444 | 8 | 1.61E-05 | 3 | 6.02E-06 | 38% | Pass |
| 95 | 19.639 | 7 | 1.40E-05 | 3 | 6.02E-06 | 43% | Pass |
| 96 | 19.834 | 7 | 1.40E-05 | 3 | 6.02E-06 | 43% | Pass |
| 97 | 20.029 | 7 | 1.40E-05 | 2 | 4.01E-06 | 29% | Pass |
| 98 | 20.225 | 7 | 1.40E-05 | 2 | 4.01E-06 | 29% | Pass |
| 99 | 20.420 | 7 | 1.40E-05 | 2 | 4.01E-06 | 29% | Pass |
| 100 | 20.615 | 7 | 1.40E-05 | 2 | 4.01E-06 | 29% | Pass |

# Node 3E

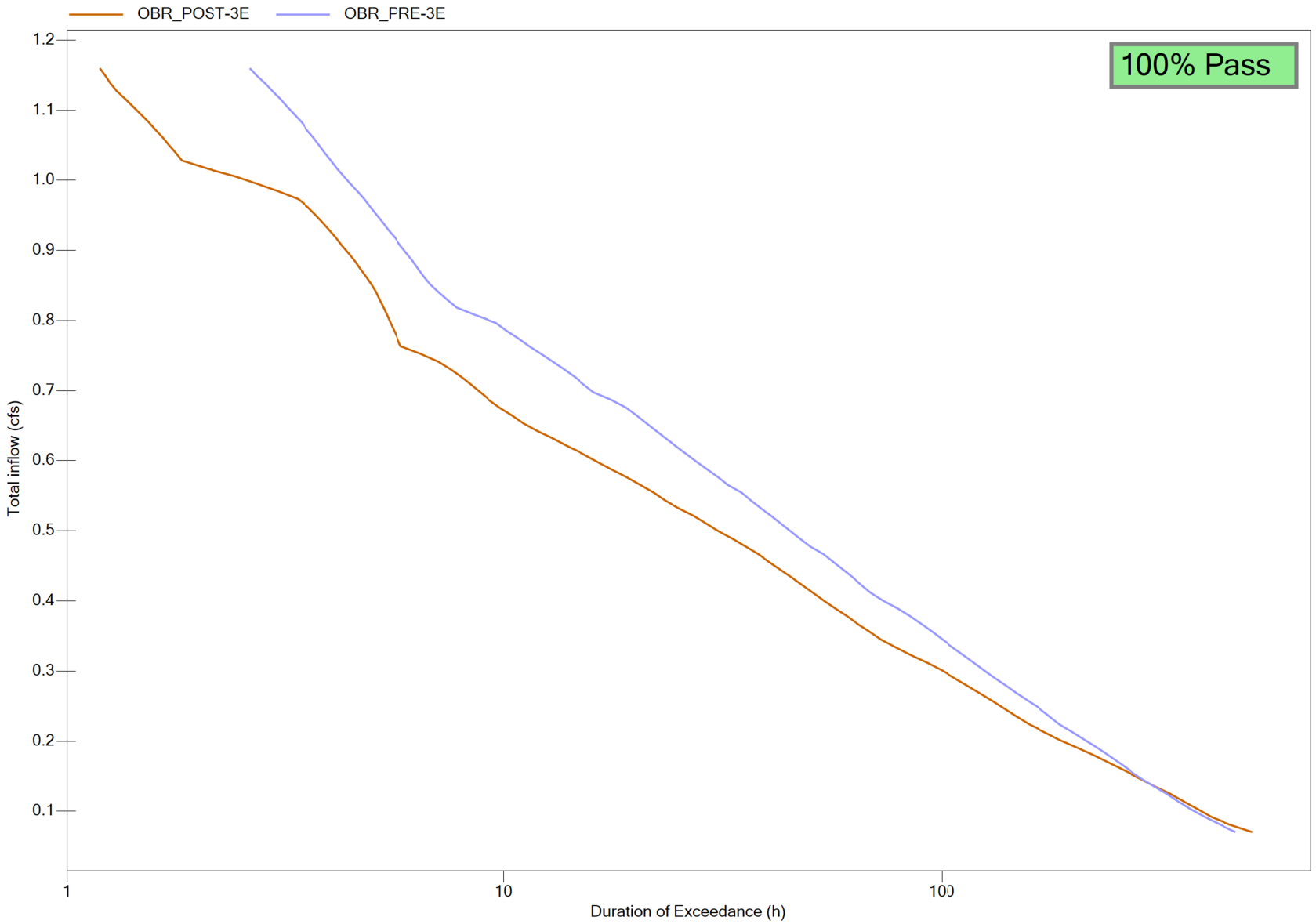
OBR_POST-3E
OBR_PRE-3E
100% Pass
Total inflow (cfs)
1.2
1.1
1.0
0.9
0.8
0.7
0.6
0.5
0.4
0.3
0.2
0.1
1
10
100
Duration of Exceedance (h)

**BASIN 3E**

| | | |
|---|---|---|
| **Lower Flow Threshold:** | 10% | |
| **0.1xQ2 (Pre):** | 0.061 | cfs |
| **Q10 (Pre):** | 1.048 | cfs |
| **# of Ordinates:** | 100 | |
| **Incremental Q (Pre):** | 0.00988 | cfs |
| **Total Hourly Data:** | 498244 | hours |

**The proposed BMP:** PASSED

| Interval | Pre-project Flow (cfs) | Pre-project Hours | Pre-project % Time Exceeding | Post-project Hours | Post-project % Time Exceeding | Percentage | Pass/Fail |
|---|---|---|---|---|---|---|---|
| 0 | 0.061 | 493 | 9.89E-04 | 509 | 1.02E-03 | 103% | Pass |
| 1 | 0.070 | 482 | 9.67E-04 | 457 | 9.17E-04 | 95% | Pass |
| 2 | 0.080 | 462 | 9.27E-04 | 415 | 8.33E-04 | 90% | Pass |
| 3 | 0.090 | 449 | 9.01E-04 | 390 | 7.83E-04 | 87% | Pass |
| 4 | 0.100 | 424 | 8.51E-04 | 359 | 7.21E-04 | 85% | Pass |
| 5 | 0.110 | 424 | 8.51E-04 | 359 | 7.21E-04 | 85% | Pass |
| 6 | 0.120 | 387 | 7.77E-04 | 341 | 6.84E-04 | 88% | Pass |
| 7 | 0.130 | 365 | 7.33E-04 | 321 | 6.44E-04 | 88% | Pass |
| 8 | 0.140 | 361 | 7.25E-04 | 306 | 6.14E-04 | 85% | Pass |
| 9 | 0.149 | 350 | 7.02E-04 | 284 | 5.70E-04 | 81% | Pass |
| 10 | 0.159 | 340 | 6.82E-04 | 268 | 5.38E-04 | 79% | Pass |
| 11 | 0.169 | 304 | 6.10E-04 | 245 | 4.92E-04 | 81% | Pass |
| 12 | 0.179 | 293 | 5.88E-04 | 224 | 4.50E-04 | 76% | Pass |
| 13 | 0.189 | 282 | 5.66E-04 | 208 | 4.17E-04 | 74% | Pass |
| 14 | 0.199 | 276 | 5.54E-04 | 191 | 3.83E-04 | 69% | Pass |
| 15 | 0.209 | 260 | 5.22E-04 | 180 | 3.61E-04 | 69% | Pass |
| 16 | 0.219 | 255 | 5.12E-04 | 168 | 3.37E-04 | 66% | Pass |
| 17 | 0.228 | 245 | 4.92E-04 | 157 | 3.15E-04 | 64% | Pass |
| 18 | 0.238 | 235 | 4.72E-04 | 148 | 2.97E-04 | 63% | Pass |
| 19 | 0.248 | 227 | 4.56E-04 | 146 | 2.93E-04 | 64% | Pass |
| 20 | 0.258 | 205 | 4.11E-04 | 138 | 2.77E-04 | 67% | Pass |
| 21 | 0.268 | 187 | 3.75E-04 | 127 | 2.55E-04 | 68% | Pass |
| 22 | 0.278 | 183 | 3.67E-04 | 119 | 2.39E-04 | 65% | Pass |
| 23 | 0.288 | 173 | 3.47E-04 | 116 | 2.33E-04 | 67% | Pass |
| 24 | 0.298 | 165 | 3.31E-04 | 108 | 2.17E-04 | 65% | Pass |
| 25 | 0.308 | 163 | 3.27E-04 | 103 | 2.07E-04 | 63% | Pass |
| 26 | 0.317 | 160 | 3.21E-04 | 99 | 1.99E-04 | 62% | Pass |
| 27 | 0.327 | 160 | 3.21E-04 | 90 | 1.81E-04 | 56% | Pass |
| 28 | 0.337 | 160 | 3.21E-04 | 82 | 1.65E-04 | 51% | Pass |
| 29 | 0.347 | 154 | 3.09E-04 | 79 | 1.59E-04 | 51% | Pass |
| 30 | 0.357 | 145 | 2.91E-04 | 73 | 1.47E-04 | 50% | Pass |
| 31 | 0.367 | 136 | 2.73E-04 | 71 | 1.43E-04 | 52% | Pass |
| 32 | 0.377 | 134 | 2.69E-04 | 68 | 1.36E-04 | 51% | Pass |
| 33 | 0.387 | 132 | 2.65E-04 | 65 | 1.30E-04 | 49% | Pass |
| 34 | 0.396 | 127 | 2.55E-04 | 59 | 1.18E-04 | 46% | Pass |
| 35 | 0.406 | 111 | 2.23E-04 | 56 | 1.12E-04 | 50% | Pass |
| 36 | 0.416 | 102 | 2.05E-04 | 52 | 1.04E-04 | 51% | Pass |
| 37 | 0.426 | 98 | 1.97E-04 | 50 | 1.00E-04 | 51% | Pass |
| 38 | 0.436 | 98 | 1.97E-04 | 48 | 9.63E-05 | 49% | Pass |
| 39 | 0.446 | 97 | 1.95E-04 | 44 | 8.83E-05 | 45% | Pass |
| 40 | 0.456 | 95 | 1.91E-04 | 40 | 8.03E-05 | 42% | Pass |
| 41 | 0.466 | 91 | 1.83E-04 | 39 | 7.83E-05 | 43% | Pass |
| 42 | 0.475 | 89 | 1.79E-04 | 37 | 7.43E-05 | 42% | Pass |
| 43 | 0.485 | 88 | 1.77E-04 | 37 | 7.43E-05 | 42% | Pass |
| 44 | 0.495 | 84 | 1.69E-04 | 36 | 7.23E-05 | 43% | Pass |
| 45 | 0.505 | 83 | 1.67E-04 | 35 | 7.02E-05 | 42% | Pass |
| 46 | 0.515 | 79 | 1.59E-04 | 32 | 6.42E-05 | 41% | Pass |
| 47 | 0.525 | 71 | 1.43E-04 | 30 | 6.02E-05 | 42% | Pass |
| 48 | 0.535 | 71 | 1.43E-04 | 30 | 6.02E-05 | 42% | Pass |
| 49 | 0.545 | 69 | 1.38E-04 | 27 | 5.42E-05 | 39% | Pass |
| 50 | 0.554 | 59 | 1.18E-04 | 26 | 5.22E-05 | 44% | Pass |
| 51 | 0.564 | 57 | 1.14E-04 | 25 | 5.02E-05 | 44% | Pass |
| 52 | 0.574 | 56 | 1.12E-04 | 25 | 5.02E-05 | 45% | Pass |
| 53 | 0.584 | 53 | 1.06E-04 | 23 | 4.62E-05 | 43% | Pass |

| | | | | | | | |
|---|---|---|---|---|---|---|---|
| 54 | 0.594 | 52 | 1.04E-04 | 20 | 4.01E-05 | 38% | Pass |
| 55 | 0.604 | 51 | 1.02E-04 | 19 | 3.81E-05 | 37% | Pass |
| 56 | 0.614 | 50 | 1.00E-04 | 19 | 3.81E-05 | 38% | Pass |
| 57 | 0.624 | 48 | 9.63E-05 | 18 | 3.61E-05 | 38% | Pass |
| 58 | 0.633 | 48 | 9.63E-05 | 17 | 3.41E-05 | 35% | Pass |
| 59 | 0.643 | 48 | 9.63E-05 | 17 | 3.41E-05 | 35% | Pass |
| 60 | 0.653 | 47 | 9.43E-05 | 15 | 3.01E-05 | 32% | Pass |
| 61 | 0.663 | 45 | 9.03E-05 | 15 | 3.01E-05 | 33% | Pass |
| 62 | 0.673 | 45 | 9.03E-05 | 13 | 2.61E-05 | 29% | Pass |
| 63 | 0.683 | 40 | 8.03E-05 | 11 | 2.21E-05 | 28% | Pass |
| 64 | 0.693 | 37 | 7.43E-05 | 11 | 2.21E-05 | 30% | Pass |
| 65 | 0.703 | 33 | 6.62E-05 | 11 | 2.21E-05 | 33% | Pass |
| 66 | 0.712 | 33 | 6.62E-05 | 11 | 2.21E-05 | 33% | Pass |
| 67 | 0.722 | 32 | 6.42E-05 | 11 | 2.21E-05 | 34% | Pass |
| 68 | 0.732 | 32 | 6.42E-05 | 10 | 2.01E-05 | 31% | Pass |
| 69 | 0.742 | 28 | 5.62E-05 | 7 | 1.40E-05 | 25% | Pass |
| 70 | 0.752 | 27 | 5.42E-05 | 7 | 1.40E-05 | 26% | Pass |
| 71 | 0.762 | 27 | 5.42E-05 | 6 | 1.20E-05 | 22% | Pass |
| 72 | 0.772 | 26 | 5.22E-05 | 6 | 1.20E-05 | 23% | Pass |
| 73 | 0.782 | 26 | 5.22E-05 | 6 | 1.20E-05 | 23% | Pass |
| 74 | 0.791 | 26 | 5.22E-05 | 6 | 1.20E-05 | 23% | Pass |
| 75 | 0.801 | 25 | 5.02E-05 | 6 | 1.20E-05 | 24% | Pass |
| 76 | 0.811 | 25 | 5.02E-05 | 6 | 1.20E-05 | 24% | Pass |
| 77 | 0.821 | 23 | 4.62E-05 | 6 | 1.20E-05 | 26% | Pass |
| 78 | 0.831 | 18 | 3.61E-05 | 6 | 1.20E-05 | 33% | Pass |
| 79 | 0.841 | 12 | 2.41E-05 | 6 | 1.20E-05 | 50% | Pass |
| 80 | 0.851 | 12 | 2.41E-05 | 5 | 1.00E-05 | 42% | Pass |
| 81 | 0.861 | 12 | 2.41E-05 | 5 | 1.00E-05 | 42% | Pass |
| 82 | 0.870 | 12 | 2.41E-05 | 5 | 1.00E-05 | 42% | Pass |
| 83 | 0.880 | 12 | 2.41E-05 | 5 | 1.00E-05 | 42% | Pass |
| 84 | 0.890 | 12 | 2.41E-05 | 5 | 1.00E-05 | 42% | Pass |
| 85 | 0.900 | 12 | 2.41E-05 | 5 | 1.00E-05 | 42% | Pass |
| 86 | 0.910 | 12 | 2.41E-05 | 5 | 1.00E-05 | 42% | Pass |
| 87 | 0.920 | 12 | 2.41E-05 | 5 | 1.00E-05 | 42% | Pass |
| 88 | 0.930 | 12 | 2.41E-05 | 5 | 1.00E-05 | 42% | Pass |
| 89 | 0.940 | 12 | 2.41E-05 | 5 | 1.00E-05 | 42% | Pass |
| 90 | 0.949 | 10 | 2.01E-05 | 5 | 1.00E-05 | 50% | Pass |
| 91 | 0.959 | 10 | 2.01E-05 | 5 | 1.00E-05 | 50% | Pass |
| 92 | 0.969 | 10 | 2.01E-05 | 5 | 1.00E-05 | 50% | Pass |
| 93 | 0.979 | 10 | 2.01E-05 | 4 | 8.03E-06 | 40% | Pass |
| 94 | 0.989 | 8 | 1.61E-05 | 4 | 8.03E-06 | 50% | Pass |
| 95 | 0.999 | 7 | 1.40E-05 | 4 | 8.03E-06 | 57% | Pass |
| 96 | 1.009 | 7 | 1.40E-05 | 4 | 8.03E-06 | 57% | Pass |
| 97 | 1.019 | 7 | 1.40E-05 | 4 | 8.03E-06 | 57% | Pass |
| 98 | 1.028 | 7 | 1.40E-05 | 4 | 8.03E-06 | 57% | Pass |
| 99 | 1.038 | 7 | 1.40E-05 | 3 | 6.02E-06 | 43% | Pass |
| 100 | 1.048 | 7 | 1.40E-05 | 3 | 6.02E-06 | 43% | Pass |

# Node 3F

Flow Duration Curve Comparison

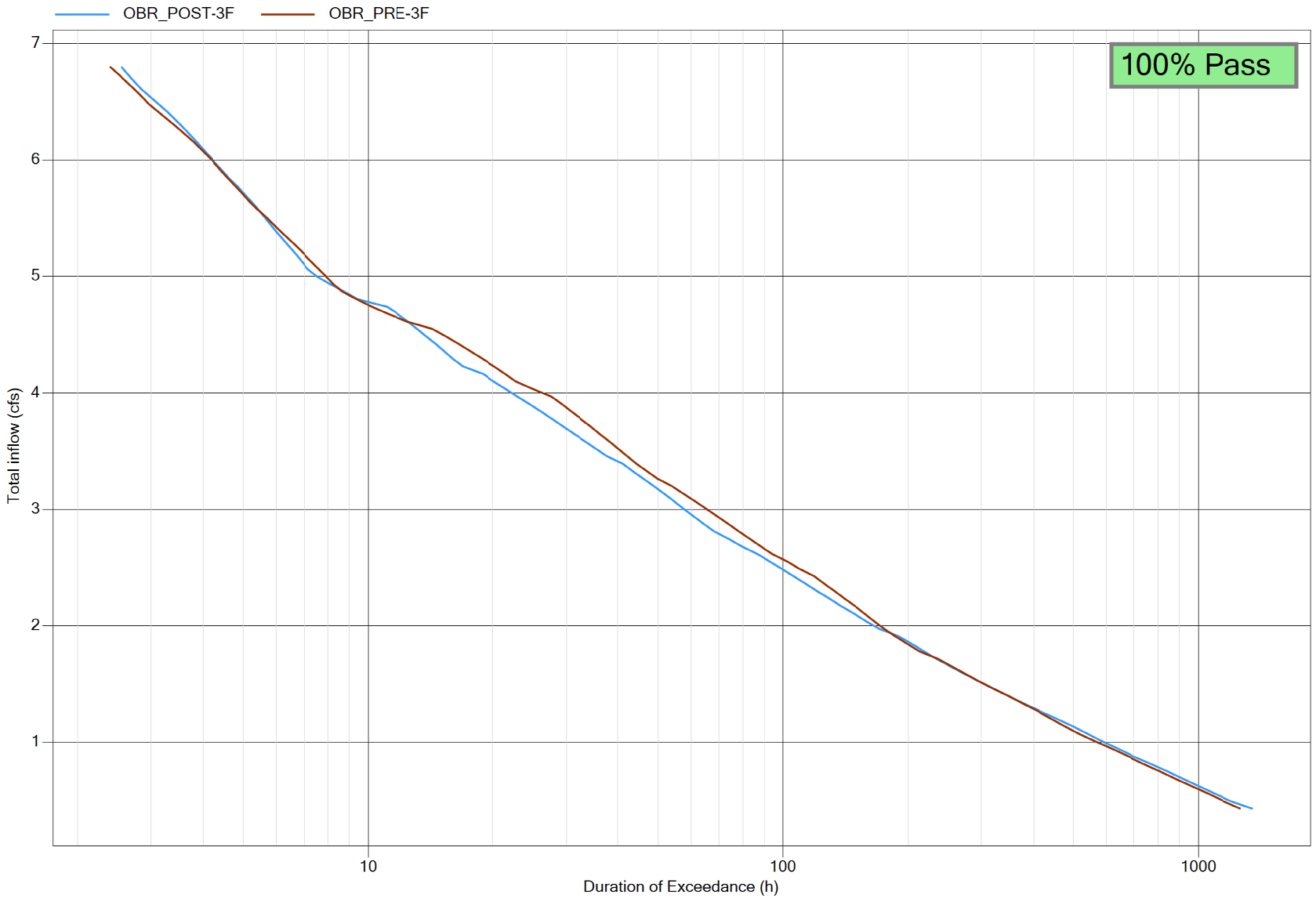

**BASIN 3F**

| | | |
|---|---|---|
| **Lower Flow Threshold:** | 10% | |
| **0.1xQ2 (Pre):** | 0.434 | cfs |
| **Q10 (Pre):** | 6.797 | cfs |
| **# of Ordinates:** | 100 | |
| **Incremental Q (Pre):** | 0.06364 | cfs |
| **Total Hourly Data:** | 498244 | hours |

**The proposed BMP:** **PASSED**

| Interval | Pre-project Flow (cfs) | Pre-project Hours | Pre-project % Time Exceeding | Post-project Hours | Post-project % Time Exceeding | Percentage | Pass/Fail |
|---|---|---|---|---|---|---|---|
| 0 | 0.434 | 1149 | 2.31E-03 | 1248 | 2.50E-03 | 109% | Pass |
| 1 | 0.497 | 1052 | 2.11E-03 | 1123 | 2.25E-03 | 107% | Pass |
| 2 | 0.561 | 978 | 1.96E-03 | 1026 | 2.06E-03 | 105% | Pass |
| 3 | 0.624 | 919 | 1.84E-03 | 955 | 1.92E-03 | 104% | Pass |
| 4 | 0.688 | 873 | 1.75E-03 | 893 | 1.79E-03 | 102% | Pass |
| 5 | 0.752 | 823 | 1.65E-03 | 837 | 1.68E-03 | 102% | Pass |
| 6 | 0.815 | 770 | 1.55E-03 | 784 | 1.57E-03 | 102% | Pass |
| 7 | 0.879 | 724 | 1.45E-03 | 719 | 1.44E-03 | 99% | Pass |
| 8 | 0.943 | 655 | 1.31E-03 | 662 | 1.33E-03 | 101% | Pass |
| 9 | 1.006 | 592 | 1.19E-03 | 614 | 1.23E-03 | 104% | Pass |
| 10 | 1.070 | 537 | 1.08E-03 | 572 | 1.15E-03 | 107% | Pass |
| 11 | 1.133 | 503 | 1.01E-03 | 532 | 1.07E-03 | 106% | Pass |
| 12 | 1.197 | 480 | 9.63E-04 | 494 | 9.91E-04 | 103% | Pass |
| 13 | 1.261 | 459 | 9.21E-04 | 452 | 9.07E-04 | 98% | Pass |
| 14 | 1.324 | 436 | 8.75E-04 | 417 | 8.37E-04 | 96% | Pass |
| 15 | 1.388 | 408 | 8.19E-04 | 392 | 7.87E-04 | 96% | Pass |
| 16 | 1.452 | 386 | 7.75E-04 | 362 | 7.27E-04 | 94% | Pass |
| 17 | 1.515 | 360 | 7.23E-04 | 338 | 6.78E-04 | 94% | Pass |
| 18 | 1.579 | 343 | 6.88E-04 | 311 | 6.24E-04 | 91% | Pass |
| 19 | 1.643 | 312 | 6.26E-04 | 287 | 5.76E-04 | 92% | Pass |
| 20 | 1.706 | 289 | 5.80E-04 | 266 | 5.34E-04 | 92% | Pass |
| 21 | 1.770 | 258 | 5.18E-04 | 239 | 4.80E-04 | 93% | Pass |
| 22 | 1.833 | 238 | 4.78E-04 | 212 | 4.25E-04 | 89% | Pass |
| 23 | 1.897 | 211 | 4.23E-04 | 192 | 3.85E-04 | 91% | Pass |
| 24 | 1.961 | 199 | 3.99E-04 | 178 | 3.57E-04 | 89% | Pass |
| 25 | 2.024 | 186 | 3.73E-04 | 167 | 3.35E-04 | 90% | Pass |
| 26 | 2.088 | 178 | 3.57E-04 | 161 | 3.23E-04 | 90% | Pass |
| 27 | 2.152 | 176 | 3.53E-04 | 154 | 3.09E-04 | 88% | Pass |
| 28 | 2.215 | 168 | 3.37E-04 | 140 | 2.81E-04 | 83% | Pass |
| 29 | 2.279 | 160 | 3.21E-04 | 133 | 2.67E-04 | 83% | Pass |
| 30 | 2.343 | 157 | 3.15E-04 | 128 | 2.57E-04 | 82% | Pass |
| 31 | 2.406 | 152 | 3.05E-04 | 125 | 2.51E-04 | 82% | Pass |
| 32 | 2.470 | 146 | 2.93E-04 | 113 | 2.27E-04 | 77% | Pass |
| 33 | 2.533 | 137 | 2.75E-04 | 104 | 2.09E-04 | 76% | Pass |
| 34 | 2.597 | 125 | 2.51E-04 | 101 | 2.03E-04 | 81% | Pass |
| 35 | 2.661 | 110 | 2.21E-04 | 95 | 1.91E-04 | 86% | Pass |
| 36 | 2.724 | 109 | 2.19E-04 | 91 | 1.83E-04 | 83% | Pass |
| 37 | 2.788 | 108 | 2.17E-04 | 84 | 1.69E-04 | 78% | Pass |
| 38 | 2.852 | 101 | 2.03E-04 | 78 | 1.57E-04 | 77% | Pass |
| 39 | 2.915 | 101 | 2.03E-04 | 74 | 1.49E-04 | 73% | Pass |
| 40 | 2.979 | 97 | 1.95E-04 | 68 | 1.36E-04 | 70% | Pass |
| 41 | 3.043 | 93 | 1.87E-04 | 64 | 1.28E-04 | 69% | Pass |
| 42 | 3.106 | 91 | 1.83E-04 | 61 | 1.22E-04 | 67% | Pass |
| 43 | 3.170 | 87 | 1.75E-04 | 56 | 1.12E-04 | 64% | Pass |
| 44 | 3.233 | 79 | 1.59E-04 | 54 | 1.08E-04 | 68% | Pass |
| 45 | 3.297 | 70 | 1.40E-04 | 52 | 1.04E-04 | 74% | Pass |
| 46 | 3.361 | 64 | 1.28E-04 | 51 | 1.02E-04 | 80% | Pass |
| 47 | 3.424 | 60 | 1.20E-04 | 49 | 9.83E-05 | 82% | Pass |
| 48 | 3.488 | 59 | 1.18E-04 | 47 | 9.43E-05 | 80% | Pass |
| 49 | 3.552 | 57 | 1.14E-04 | 47 | 9.43E-05 | 82% | Pass |
| 50 | 3.615 | 55 | 1.10E-04 | 42 | 8.43E-05 | 76% | Pass |
| 51 | 3.679 | 54 | 1.08E-04 | 39 | 7.83E-05 | 72% | Pass |
| 52 | 3.743 | 53 | 1.06E-04 | 33 | 6.62E-05 | 62% | Pass |

| | | | | | | | |
|---|---|---|---|---|---|---|---|
| 53 | 3.806 | 52 | 1.04E-04 | 33 | 6.62E-05 | 63% | Pass |
| 54 | 3.870 | 50 | 1.00E-04 | 31 | 6.22E-05 | 62% | Pass |
| 55 | 3.933 | 49 | 9.83E-05 | 27 | 5.42E-05 | 55% | Pass |
| 56 | 3.997 | 48 | 9.63E-05 | 27 | 5.42E-05 | 56% | Pass |
| 57 | 4.061 | 43 | 8.63E-05 | 22 | 4.42E-05 | 51% | Pass |
| 58 | 4.124 | 39 | 7.83E-05 | 22 | 4.42E-05 | 56% | Pass |
| 59 | 4.188 | 36 | 7.23E-05 | 21 | 4.21E-05 | 58% | Pass |
| 60 | 4.252 | 35 | 7.02E-05 | 18 | 3.61E-05 | 51% | Pass |
| 61 | 4.315 | 35 | 7.02E-05 | 13 | 2.61E-05 | 37% | Pass |
| 62 | 4.379 | 33 | 6.62E-05 | 11 | 2.21E-05 | 33% | Pass |
| 63 | 4.443 | 32 | 6.42E-05 | 10 | 2.01E-05 | 31% | Pass |
| 64 | 4.506 | 32 | 6.42E-05 | 10 | 2.01E-05 | 31% | Pass |
| 65 | 4.570 | 32 | 6.42E-05 | 10 | 2.01E-05 | 31% | Pass |
| 66 | 4.633 | 28 | 5.62E-05 | 10 | 2.01E-05 | 36% | Pass |
| 67 | 4.697 | 27 | 5.42E-05 | 9 | 1.81E-05 | 33% | Pass |
| 68 | 4.761 | 22 | 4.42E-05 | 8 | 1.61E-05 | 36% | Pass |
| 69 | 4.824 | 20 | 4.01E-05 | 8 | 1.61E-05 | 40% | Pass |
| 70 | 4.888 | 16 | 3.21E-05 | 8 | 1.61E-05 | 50% | Pass |
| 71 | 4.952 | 12 | 2.41E-05 | 8 | 1.61E-05 | 67% | Pass |
| 72 | 5.015 | 12 | 2.41E-05 | 8 | 1.61E-05 | 67% | Pass |
| 73 | 5.079 | 12 | 2.41E-05 | 8 | 1.61E-05 | 67% | Pass |
| 74 | 5.143 | 12 | 2.41E-05 | 7 | 1.40E-05 | 58% | Pass |
| 75 | 5.206 | 12 | 2.41E-05 | 7 | 1.40E-05 | 58% | Pass |
| 76 | 5.270 | 11 | 2.21E-05 | 7 | 1.40E-05 | 64% | Pass |
| 77 | 5.333 | 11 | 2.21E-05 | 7 | 1.40E-05 | 64% | Pass |
| 78 | 5.397 | 10 | 2.01E-05 | 7 | 1.40E-05 | 70% | Pass |
| 79 | 5.461 | 10 | 2.01E-05 | 7 | 1.40E-05 | 70% | Pass |
| 80 | 5.524 | 10 | 2.01E-05 | 7 | 1.40E-05 | 70% | Pass |
| 81 | 5.588 | 10 | 2.01E-05 | 6 | 1.20E-05 | 60% | Pass |
| 82 | 5.652 | 8 | 1.61E-05 | 6 | 1.20E-05 | 75% | Pass |
| 83 | 5.715 | 8 | 1.61E-05 | 6 | 1.20E-05 | 75% | Pass |
| 84 | 5.779 | 8 | 1.61E-05 | 6 | 1.20E-05 | 75% | Pass |
| 85 | 5.843 | 7 | 1.40E-05 | 5 | 1.00E-05 | 71% | Pass |
| 86 | 5.906 | 7 | 1.40E-05 | 5 | 1.00E-05 | 71% | Pass |
| 87 | 5.970 | 7 | 1.40E-05 | 4 | 8.03E-06 | 57% | Pass |
| 88 | 6.033 | 7 | 1.40E-05 | 4 | 8.03E-06 | 57% | Pass |
| 89 | 6.097 | 7 | 1.40E-05 | 4 | 8.03E-06 | 57% | Pass |
| 90 | 6.161 | 7 | 1.40E-05 | 3 | 6.02E-06 | 43% | Pass |
| 91 | 6.224 | 7 | 1.40E-05 | 3 | 6.02E-06 | 43% | Pass |
| 92 | 6.288 | 7 | 1.40E-05 | 3 | 6.02E-06 | 43% | Pass |
| 93 | 6.352 | 7 | 1.40E-05 | 3 | 6.02E-06 | 43% | Pass |
| 94 | 6.415 | 7 | 1.40E-05 | 3 | 6.02E-06 | 43% | Pass |
| 95 | 6.479 | 6 | 1.20E-05 | 3 | 6.02E-06 | 50% | Pass |
| 96 | 6.542 | 6 | 1.20E-05 | 3 | 6.02E-06 | 50% | Pass |
| 97 | 6.606 | 6 | 1.20E-05 | 3 | 6.02E-06 | 50% | Pass |
| 98 | 6.670 | 6 | 1.20E-05 | 3 | 6.02E-06 | 50% | Pass |
| 99 | 6.733 | 6 | 1.20E-05 | 3 | 6.02E-06 | 50% | Pass |
| 100 | 6.797 | 5 | 1.00E-05 | 3 | 6.02E-06 | 60% | Pass |

# Node 3GOUT

Flow Duration Curve Comparison

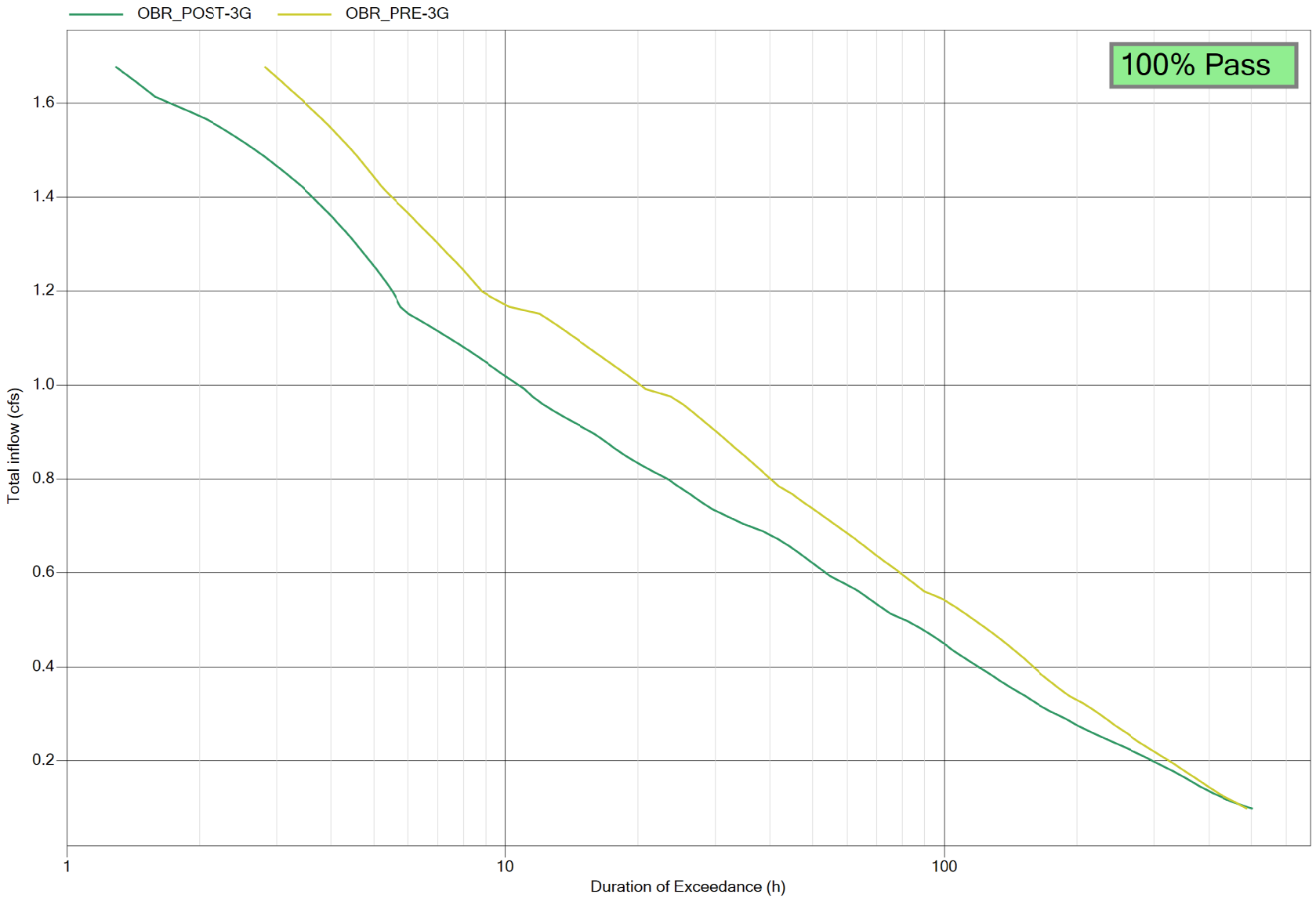

**BASIN 3G**

| | | |
|---|---|---|
| **Lower Flow Threshold:** | 10% | |
| **0.1xQ2 (Pre):** | 0.098 | cfs |
| **Q10 (Pre):** | 1.677 | cfs |
| **# of Ordinates:** | 100 | |
| **Incremental Q (Pre):** | 0.01578 | cfs |
| **Total Hourly Data:** | 498244 | hours |

**The proposed BMP:** PASSED

| Interval | Pre-project Flow (cfs) | Pre-project Hours | Pre-project % Time Exceeding | Post-project Hours | Post-project % Time Exceeding | Percentage | Pass/Fail |
|---|---|---|---|---|---|---|---|
| 0 | 0.098 | 420 | 8.43E-04 | 451 | 9.05E-04 | 107% | Pass |
| 1 | 0.114 | 398 | 7.99E-04 | 401 | 8.05E-04 | 101% | Pass |
| 2 | 0.130 | 363 | 7.29E-04 | 377 | 7.57E-04 | 104% | Pass |
| 3 | 0.146 | 350 | 7.02E-04 | 347 | 6.96E-04 | 99% | Pass |
| 4 | 0.161 | 339 | 6.80E-04 | 330 | 6.62E-04 | 97% | Pass |
| 5 | 0.177 | 334 | 6.70E-04 | 315 | 6.32E-04 | 94% | Pass |
| 6 | 0.193 | 322 | 6.46E-04 | 292 | 5.86E-04 | 91% | Pass |
| 7 | 0.209 | 315 | 6.32E-04 | 279 | 5.60E-04 | 89% | Pass |
| 8 | 0.225 | 304 | 6.10E-04 | 253 | 5.08E-04 | 83% | Pass |
| 9 | 0.240 | 269 | 5.40E-04 | 231 | 4.64E-04 | 86% | Pass |
| 10 | 0.256 | 267 | 5.36E-04 | 219 | 4.40E-04 | 82% | Pass |
| 11 | 0.272 | 258 | 5.18E-04 | 199 | 3.99E-04 | 77% | Pass |
| 12 | 0.288 | 255 | 5.12E-04 | 192 | 3.85E-04 | 75% | Pass |
| 13 | 0.303 | 237 | 4.76E-04 | 174 | 3.49E-04 | 73% | Pass |
| 14 | 0.319 | 227 | 4.56E-04 | 168 | 3.37E-04 | 74% | Pass |
| 15 | 0.335 | 198 | 3.97E-04 | 160 | 3.21E-04 | 81% | Pass |
| 16 | 0.351 | 185 | 3.71E-04 | 148 | 2.97E-04 | 80% | Pass |
| 17 | 0.367 | 183 | 3.67E-04 | 138 | 2.77E-04 | 75% | Pass |
| 18 | 0.382 | 167 | 3.35E-04 | 130 | 2.61E-04 | 78% | Pass |
| 19 | 0.398 | 167 | 3.35E-04 | 129 | 2.59E-04 | 77% | Pass |
| 20 | 0.414 | 162 | 3.25E-04 | 117 | 2.35E-04 | 72% | Pass |
| 21 | 0.430 | 159 | 3.19E-04 | 114 | 2.29E-04 | 72% | Pass |
| 22 | 0.446 | 156 | 3.13E-04 | 108 | 2.17E-04 | 69% | Pass |
| 23 | 0.461 | 150 | 3.01E-04 | 104 | 2.09E-04 | 69% | Pass |
| 24 | 0.477 | 149 | 2.99E-04 | 102 | 2.05E-04 | 68% | Pass |
| 25 | 0.493 | 147 | 2.95E-04 | 94 | 1.89E-04 | 64% | Pass |
| 26 | 0.509 | 145 | 2.91E-04 | 89 | 1.79E-04 | 61% | Pass |
| 27 | 0.524 | 137 | 2.75E-04 | 80 | 1.61E-04 | 58% | Pass |
| 28 | 0.540 | 128 | 2.57E-04 | 78 | 1.57E-04 | 61% | Pass |
| 29 | 0.556 | 107 | 2.15E-04 | 73 | 1.47E-04 | 68% | Pass |
| 30 | 0.572 | 104 | 2.09E-04 | 64 | 1.28E-04 | 62% | Pass |
| 31 | 0.588 | 104 | 2.09E-04 | 63 | 1.26E-04 | 61% | Pass |
| 32 | 0.603 | 101 | 2.03E-04 | 57 | 1.14E-04 | 56% | Pass |
| 33 | 0.619 | 101 | 2.03E-04 | 56 | 1.12E-04 | 55% | Pass |
| 34 | 0.635 | 93 | 1.87E-04 | 54 | 1.08E-04 | 58% | Pass |
| 35 | 0.651 | 90 | 1.81E-04 | 50 | 1.00E-04 | 56% | Pass |
| 36 | 0.666 | 90 | 1.81E-04 | 49 | 9.83E-05 | 54% | Pass |
| 37 | 0.682 | 88 | 1.77E-04 | 43 | 8.63E-05 | 49% | Pass |
| 38 | 0.698 | 86 | 1.73E-04 | 42 | 8.43E-05 | 49% | Pass |
| 39 | 0.714 | 81 | 1.63E-04 | 40 | 8.03E-05 | 49% | Pass |
| 40 | 0.730 | 75 | 1.51E-04 | 37 | 7.43E-05 | 49% | Pass |
| 41 | 0.745 | 74 | 1.49E-04 | 32 | 6.42E-05 | 43% | Pass |
| 42 | 0.761 | 67 | 1.34E-04 | 31 | 6.22E-05 | 46% | Pass |
| 43 | 0.777 | 58 | 1.16E-04 | 30 | 6.02E-05 | 52% | Pass |
| 44 | 0.793 | 56 | 1.12E-04 | 28 | 5.62E-05 | 50% | Pass |
| 45 | 0.808 | 54 | 1.08E-04 | 28 | 5.62E-05 | 52% | Pass |
| 46 | 0.824 | 52 | 1.04E-04 | 25 | 5.02E-05 | 48% | Pass |
| 47 | 0.840 | 51 | 1.02E-04 | 23 | 4.62E-05 | 45% | Pass |
| 48 | 0.856 | 50 | 1.00E-04 | 22 | 4.42E-05 | 44% | Pass |
| 49 | 0.872 | 46 | 9.23E-05 | 21 | 4.21E-05 | 46% | Pass |
| 50 | 0.887 | 46 | 9.23E-05 | 21 | 4.21E-05 | 46% | Pass |
| 51 | 0.903 | 46 | 9.23E-05 | 19 | 3.81E-05 | 41% | Pass |
| 52 | 0.919 | 45 | 9.03E-05 | 18 | 3.61E-05 | 40% | Pass |

| | | | | | | | |
|---|---|---|---|---|---|---|---|
| 53 | 0.935 | 43 | 8.63E-05 | 17 | 3.41E-05 | 40% | Pass |
| 54 | 0.951 | 43 | 8.63E-05 | 17 | 3.41E-05 | 40% | Pass |
| 55 | 0.966 | 43 | 8.63E-05 | 17 | 3.41E-05 | 40% | Pass |
| 56 | 0.982 | 35 | 7.02E-05 | 17 | 3.41E-05 | 49% | Pass |
| 57 | 0.998 | 32 | 6.42E-05 | 16 | 3.21E-05 | 50% | Pass |
| 58 | 1.014 | 31 | 6.22E-05 | 13 | 2.61E-05 | 42% | Pass |
| 59 | 1.029 | 31 | 6.22E-05 | 13 | 2.61E-05 | 42% | Pass |
| 60 | 1.045 | 30 | 6.02E-05 | 12 | 2.41E-05 | 40% | Pass |
| 61 | 1.061 | 29 | 5.82E-05 | 10 | 2.01E-05 | 34% | Pass |
| 62 | 1.077 | 27 | 5.42E-05 | 10 | 2.01E-05 | 37% | Pass |
| 63 | 1.093 | 27 | 5.42E-05 | 9 | 1.81E-05 | 33% | Pass |
| 64 | 1.108 | 26 | 5.22E-05 | 9 | 1.81E-05 | 35% | Pass |
| 65 | 1.124 | 24 | 4.82E-05 | 8 | 1.61E-05 | 33% | Pass |
| 66 | 1.140 | 24 | 4.82E-05 | 8 | 1.61E-05 | 33% | Pass |
| 67 | 1.156 | 24 | 4.82E-05 | 6 | 1.20E-05 | 25% | Pass |
| 68 | 1.171 | 22 | 4.42E-05 | 5 | 1.00E-05 | 23% | Pass |
| 69 | 1.187 | 21 | 4.21E-05 | 5 | 1.00E-05 | 24% | Pass |
| 70 | 1.203 | 12 | 2.41E-05 | 5 | 1.00E-05 | 42% | Pass |
| 71 | 1.219 | 12 | 2.41E-05 | 5 | 1.00E-05 | 42% | Pass |
| 72 | 1.235 | 12 | 2.41E-05 | 5 | 1.00E-05 | 42% | Pass |
| 73 | 1.250 | 12 | 2.41E-05 | 5 | 1.00E-05 | 42% | Pass |
| 74 | 1.266 | 12 | 2.41E-05 | 5 | 1.00E-05 | 42% | Pass |
| 75 | 1.282 | 12 | 2.41E-05 | 4 | 8.03E-06 | 33% | Pass |
| 76 | 1.298 | 11 | 2.21E-05 | 4 | 8.03E-06 | 36% | Pass |
| 77 | 1.314 | 11 | 2.21E-05 | 4 | 8.03E-06 | 36% | Pass |
| 78 | 1.329 | 11 | 2.21E-05 | 3 | 6.02E-06 | 27% | Pass |
| 79 | 1.345 | 10 | 2.01E-05 | 2 | 4.01E-06 | 20% | Pass |
| 80 | 1.361 | 10 | 2.01E-05 | 2 | 4.01E-06 | 20% | Pass |
| 81 | 1.377 | 10 | 2.01E-05 | 2 | 4.01E-06 | 20% | Pass |
| 82 | 1.392 | 10 | 2.01E-05 | 2 | 4.01E-06 | 20% | Pass |
| 83 | 1.408 | 10 | 2.01E-05 | 2 | 4.01E-06 | 20% | Pass |
| 84 | 1.424 | 7 | 1.40E-05 | 2 | 4.01E-06 | 29% | Pass |
| 85 | 1.440 | 7 | 1.40E-05 | 2 | 4.01E-06 | 29% | Pass |
| 86 | 1.456 | 7 | 1.40E-05 | 2 | 4.01E-06 | 29% | Pass |
| 87 | 1.471 | 7 | 1.40E-05 | 2 | 4.01E-06 | 29% | Pass |
| 88 | 1.487 | 7 | 1.40E-05 | 2 | 4.01E-06 | 29% | Pass |
| 89 | 1.503 | 7 | 1.40E-05 | 2 | 4.01E-06 | 29% | Pass |
| 90 | 1.519 | 7 | 1.40E-05 | 2 | 4.01E-06 | 29% | Pass |
| 91 | 1.534 | 7 | 1.40E-05 | 2 | 4.01E-06 | 29% | Pass |
| 92 | 1.550 | 7 | 1.40E-05 | 2 | 4.01E-06 | 29% | Pass |
| 93 | 1.566 | 7 | 1.40E-05 | 2 | 4.01E-06 | 29% | Pass |
| 94 | 1.582 | 7 | 1.40E-05 | 2 | 4.01E-06 | 29% | Pass |
| 95 | 1.598 | 7 | 1.40E-05 | 2 | 4.01E-06 | 29% | Pass |
| 96 | 1.613 | 7 | 1.40E-05 | 2 | 4.01E-06 | 29% | Pass |
| 97 | 1.629 | 6 | 1.20E-05 | 2 | 4.01E-06 | 33% | Pass |
| 98 | 1.645 | 6 | 1.20E-05 | 2 | 4.01E-06 | 33% | Pass |
| 99 | 1.661 | 6 | 1.20E-05 | 2 | 4.01E-06 | 33% | Pass |
| 100 | 1.677 | 5 | 1.00E-05 | 2 | 4.01E-06 | 40% | Pass |

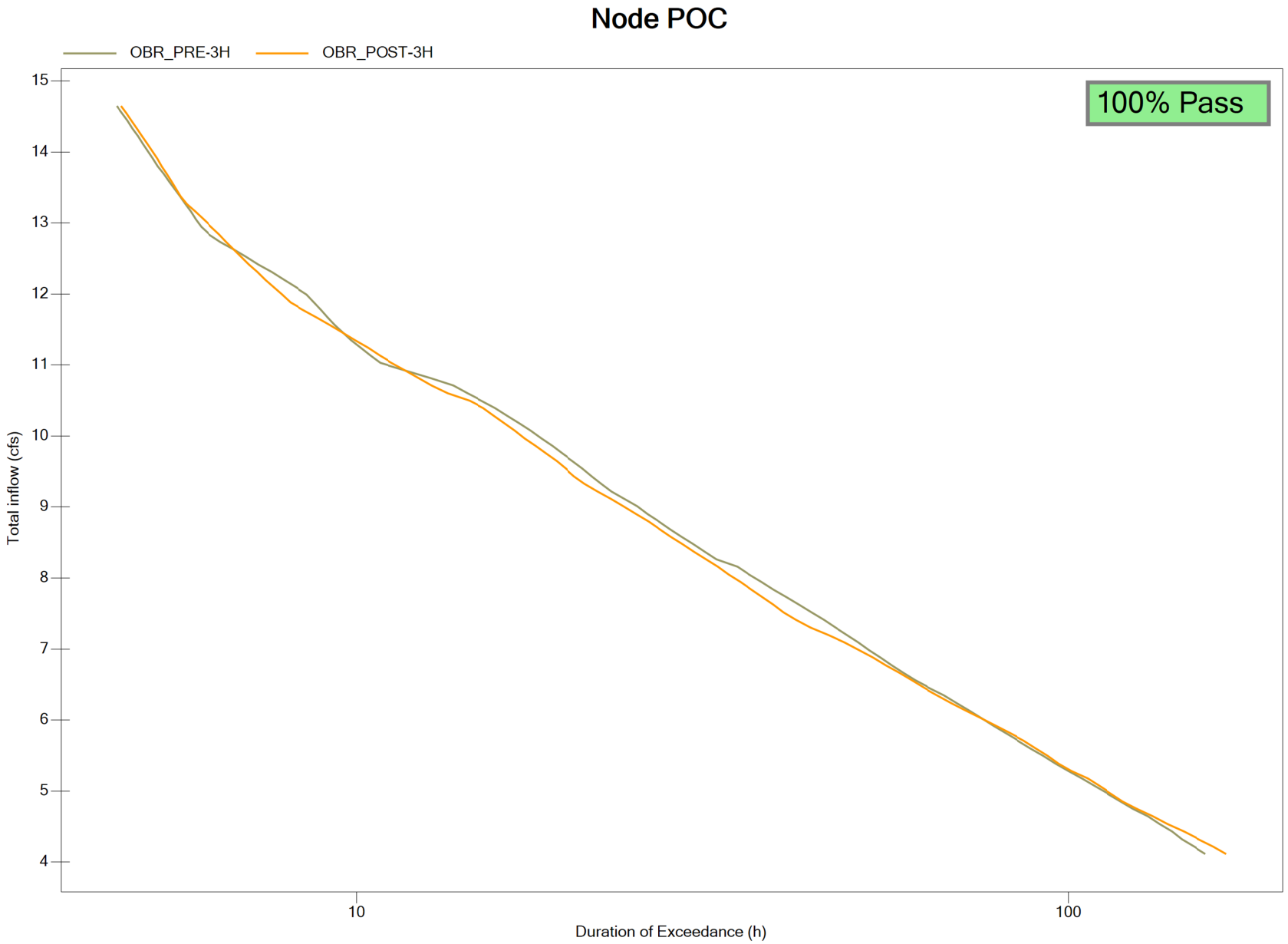
Node POC
OBR_PRE-3H
OBR_POST-3H
100% Pass
Total inflow (cfs)
15
14
13
12
11
10
9
8
7
6
5
4
10
100
Duration of Exceedance (h)

**BASIN 3H**

| | | |
|---|---|---|
| **Lower Flow Threshold:** | 50% | |
| **0.5xQ2 (Pre):** | 4.107 | cfs |
| **Q10 (Pre):** | 14.653 | cfs |
| **# of Ordinates:** | 100 | |
| **Incremental Q (Pre):** | 0.10546 | cfs |
| **Total Hourly Data:** | 498244 | hours |

**The proposed BMP:** PASSED

| Interval | Pre-project Flow (cfs) | Pre-project Hours | Pre-project % Time Exceeding | Post-project Hours | Post-project % Time Exceeding | Percentage | Pass/Fail |
|---|---|---|---|---|---|---|---|
| 0 | 4.107 | 999 | 2.01E-03 | 1020 | 2.05E-03 | 102% | Pass |
| 1 | 4.212 | 992 | 1.99E-03 | 1016 | 2.04E-03 | 102% | Pass |
| 2 | 4.318 | 988 | 1.98E-03 | 1010 | 2.03E-03 | 102% | Pass |
| 3 | 4.423 | 978 | 1.96E-03 | 1005 | 2.02E-03 | 103% | Pass |
| 4 | 4.529 | 975 | 1.96E-03 | 1001 | 2.01E-03 | 103% | Pass |
| 5 | 4.634 | 971 | 1.95E-03 | 992 | 1.99E-03 | 102% | Pass |
| 6 | 4.740 | 965 | 1.94E-03 | 987 | 1.98E-03 | 102% | Pass |
| 7 | 4.845 | 957 | 1.92E-03 | 983 | 1.97E-03 | 103% | Pass |
| 8 | 4.951 | 950 | 1.91E-03 | 973 | 1.95E-03 | 102% | Pass |
| 9 | 5.056 | 943 | 1.89E-03 | 967 | 1.94E-03 | 103% | Pass |
| 10 | 5.162 | 940 | 1.89E-03 | 965 | 1.94E-03 | 103% | Pass |
| 11 | 5.267 | 937 | 1.88E-03 | 962 | 1.93E-03 | 103% | Pass |
| 12 | 5.373 | 927 | 1.86E-03 | 958 | 1.92E-03 | 103% | Pass |
| 13 | 5.478 | 918 | 1.84E-03 | 953 | 1.91E-03 | 104% | Pass |
| 14 | 5.583 | 912 | 1.83E-03 | 948 | 1.90E-03 | 104% | Pass |
| 15 | 5.689 | 907 | 1.82E-03 | 940 | 1.89E-03 | 104% | Pass |
| 16 | 5.794 | 900 | 1.81E-03 | 936 | 1.88E-03 | 104% | Pass |
| 17 | 5.900 | 892 | 1.79E-03 | 931 | 1.87E-03 | 104% | Pass |
| 18 | 6.005 | 888 | 1.78E-03 | 930 | 1.87E-03 | 105% | Pass |
| 19 | 6.111 | 884 | 1.77E-03 | 923 | 1.85E-03 | 104% | Pass |
| 20 | 6.216 | 881 | 1.77E-03 | 918 | 1.84E-03 | 104% | Pass |
| 21 | 6.322 | 879 | 1.76E-03 | 910 | 1.83E-03 | 104% | Pass |
| 22 | 6.427 | 875 | 1.76E-03 | 904 | 1.81E-03 | 103% | Pass |
| 23 | 6.533 | 875 | 1.76E-03 | 899 | 1.80E-03 | 103% | Pass |
| 24 | 6.638 | 873 | 1.75E-03 | 893 | 1.79E-03 | 102% | Pass |
| 25 | 6.743 | 868 | 1.74E-03 | 888 | 1.78E-03 | 102% | Pass |
| 26 | 6.849 | 865 | 1.74E-03 | 880 | 1.77E-03 | 102% | Pass |
| 27 | 6.954 | 857 | 1.72E-03 | 878 | 1.76E-03 | 102% | Pass |
| 28 | 7.060 | 854 | 1.71E-03 | 875 | 1.76E-03 | 102% | Pass |
| 29 | 7.165 | 848 | 1.70E-03 | 873 | 1.75E-03 | 103% | Pass |
| 30 | 7.271 | 846 | 1.70E-03 | 873 | 1.75E-03 | 103% | Pass |
| 31 | 7.376 | 845 | 1.70E-03 | 869 | 1.74E-03 | 103% | Pass |
| 32 | 7.482 | 839 | 1.68E-03 | 862 | 1.73E-03 | 103% | Pass |
| 33 | 7.587 | 836 | 1.68E-03 | 858 | 1.72E-03 | 103% | Pass |
| 34 | 7.693 | 833 | 1.67E-03 | 855 | 1.72E-03 | 103% | Pass |
| 35 | 7.798 | 829 | 1.66E-03 | 849 | 1.70E-03 | 102% | Pass |
| 36 | 7.904 | 823 | 1.65E-03 | 845 | 1.70E-03 | 103% | Pass |
| 37 | 8.009 | 818 | 1.64E-03 | 841 | 1.69E-03 | 103% | Pass |
| 38 | 8.114 | 816 | 1.64E-03 | 836 | 1.68E-03 | 102% | Pass |
| 39 | 8.220 | 816 | 1.64E-03 | 831 | 1.67E-03 | 102% | Pass |
| 40 | 8.325 | 812 | 1.63E-03 | 829 | 1.66E-03 | 102% | Pass |
| 41 | 8.431 | 809 | 1.62E-03 | 828 | 1.66E-03 | 102% | Pass |
| 42 | 8.536 | 807 | 1.62E-03 | 827 | 1.66E-03 | 102% | Pass |
| 43 | 8.642 | 803 | 1.61E-03 | 824 | 1.65E-03 | 103% | Pass |
| 44 | 8.747 | 796 | 1.60E-03 | 820 | 1.65E-03 | 103% | Pass |
| 45 | 8.853 | 793 | 1.59E-03 | 814 | 1.63E-03 | 103% | Pass |
| 46 | 8.958 | 791 | 1.59E-03 | 812 | 1.63E-03 | 103% | Pass |
| 47 | 9.064 | 783 | 1.57E-03 | 806 | 1.62E-03 | 103% | Pass |
| 48 | 9.169 | 781 | 1.57E-03 | 802 | 1.61E-03 | 103% | Pass |
| 49 | 9.275 | 779 | 1.56E-03 | 797 | 1.60E-03 | 102% | Pass |
| 50 | 9.380 | 778 | 1.56E-03 | 796 | 1.60E-03 | 102% | Pass |
| 51 | 9.485 | 776 | 1.56E-03 | 793 | 1.59E-03 | 102% | Pass |
| 52 | 9.591 | 772 | 1.55E-03 | 789 | 1.58E-03 | 102% | Pass |
| 53 | 9.696 | 771 | 1.55E-03 | 780 | 1.57E-03 | 101% | Pass |

| | | | | | | | |
|---|---|---|---|---|---|---|---|
| 54 | 9.802 | 768 | 1.54E-03 | 778 | 1.56E-03 | 101% | Pass |
| 55 | 9.907 | 765 | 1.54E-03 | 777 | 1.56E-03 | 102% | Pass |
| 56 | 10.013 | 760 | 1.53E-03 | 773 | 1.55E-03 | 102% | Pass |
| 57 | 10.118 | 755 | 1.52E-03 | 773 | 1.55E-03 | 102% | Pass |
| 58 | 10.224 | 753 | 1.51E-03 | 772 | 1.55E-03 | 103% | Pass |
| 59 | 10.329 | 750 | 1.51E-03 | 765 | 1.54E-03 | 102% | Pass |
| 60 | 10.435 | 744 | 1.49E-03 | 763 | 1.53E-03 | 103% | Pass |
| 61 | 10.540 | 741 | 1.49E-03 | 760 | 1.53E-03 | 103% | Pass |
| 62 | 10.645 | 739 | 1.48E-03 | 759 | 1.52E-03 | 103% | Pass |
| 63 | 10.751 | 735 | 1.48E-03 | 758 | 1.52E-03 | 103% | Pass |
| 64 | 10.856 | 733 | 1.47E-03 | 753 | 1.51E-03 | 103% | Pass |
| 65 | 10.962 | 731 | 1.47E-03 | 750 | 1.51E-03 | 103% | Pass |
| 66 | 11.067 | 726 | 1.46E-03 | 745 | 1.50E-03 | 103% | Pass |
| 67 | 11.173 | 725 | 1.46E-03 | 744 | 1.49E-03 | 103% | Pass |
| 68 | 11.278 | 723 | 1.45E-03 | 742 | 1.49E-03 | 103% | Pass |
| 69 | 11.384 | 718 | 1.44E-03 | 740 | 1.49E-03 | 103% | Pass |
| 70 | 11.489 | 715 | 1.44E-03 | 738 | 1.48E-03 | 103% | Pass |
| 71 | 11.595 | 712 | 1.43E-03 | 730 | 1.47E-03 | 103% | Pass |
| 72 | 11.700 | 709 | 1.42E-03 | 722 | 1.45E-03 | 102% | Pass |
| 73 | 11.806 | 707 | 1.42E-03 | 718 | 1.44E-03 | 102% | Pass |
| 74 | 11.911 | 705 | 1.41E-03 | 715 | 1.44E-03 | 101% | Pass |
| 75 | 12.016 | 700 | 1.40E-03 | 715 | 1.44E-03 | 102% | Pass |
| 76 | 12.122 | 697 | 1.40E-03 | 712 | 1.43E-03 | 102% | Pass |
| 77 | 12.227 | 695 | 1.39E-03 | 709 | 1.42E-03 | 102% | Pass |
| 78 | 12.333 | 693 | 1.39E-03 | 708 | 1.42E-03 | 102% | Pass |
| 79 | 12.438 | 688 | 1.38E-03 | 706 | 1.42E-03 | 103% | Pass |
| 80 | 12.544 | 683 | 1.37E-03 | 702 | 1.41E-03 | 103% | Pass |
| 81 | 12.649 | 682 | 1.37E-03 | 701 | 1.41E-03 | 103% | Pass |
| 82 | 12.755 | 680 | 1.36E-03 | 698 | 1.40E-03 | 103% | Pass |
| 83 | 12.860 | 677 | 1.36E-03 | 694 | 1.39E-03 | 103% | Pass |
| 84 | 12.966 | 675 | 1.35E-03 | 689 | 1.38E-03 | 102% | Pass |
| 85 | 13.071 | 672 | 1.35E-03 | 685 | 1.37E-03 | 102% | Pass |
| 86 | 13.176 | 668 | 1.34E-03 | 677 | 1.36E-03 | 101% | Pass |
| 87 | 13.282 | 667 | 1.34E-03 | 673 | 1.35E-03 | 101% | Pass |
| 88 | 13.387 | 660 | 1.32E-03 | 670 | 1.34E-03 | 102% | Pass |
| 89 | 13.493 | 659 | 1.32E-03 | 667 | 1.34E-03 | 101% | Pass |
| 90 | 13.598 | 657 | 1.32E-03 | 666 | 1.34E-03 | 101% | Pass |
| 91 | 13.704 | 653 | 1.31E-03 | 666 | 1.34E-03 | 102% | Pass |
| 92 | 13.809 | 652 | 1.31E-03 | 663 | 1.33E-03 | 102% | Pass |
| 93 | 13.915 | 651 | 1.31E-03 | 661 | 1.33E-03 | 102% | Pass |
| 94 | 14.020 | 649 | 1.30E-03 | 657 | 1.32E-03 | 101% | Pass |
| 95 | 14.126 | 648 | 1.30E-03 | 656 | 1.32E-03 | 101% | Pass |
| 96 | 14.231 | 641 | 1.29E-03 | 655 | 1.31E-03 | 102% | Pass |
| 97 | 14.337 | 639 | 1.28E-03 | 651 | 1.31E-03 | 102% | Pass |
| 98 | 14.442 | 636 | 1.28E-03 | 649 | 1.30E-03 | 102% | Pass |
| 99 | 14.547 | 631 | 1.27E-03 | 646 | 1.30E-03 | 102% | Pass |
| 100 | 14.653 | 629 | 1.26E-03 | 645 | 1.29E-03 | 103% | Pass |

# Node 3J

Flow Duration Curve Comparison

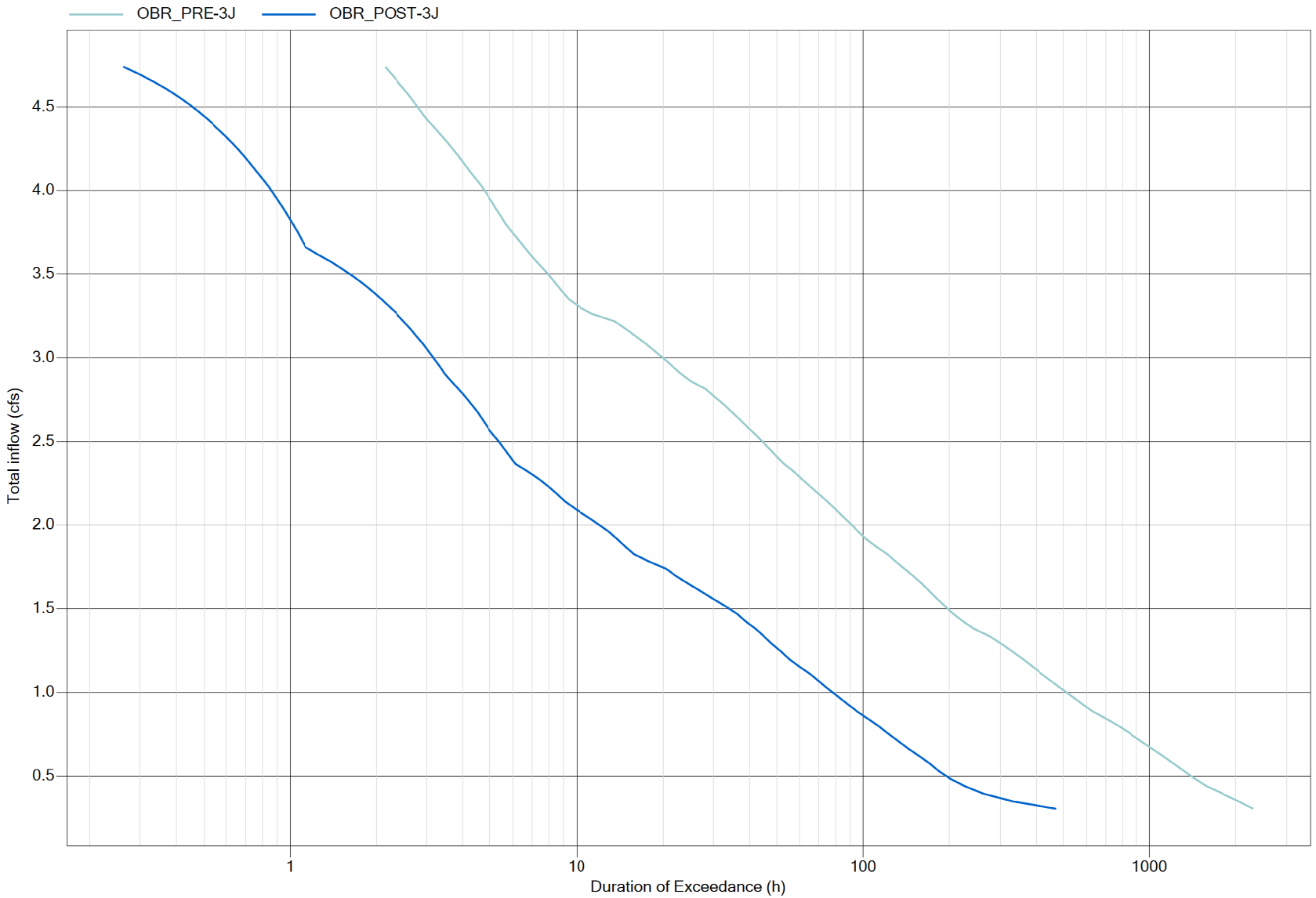

**BASIN 3J**

| | | |
|---|---|---|
| **Lower Flow Threshold:** | 10% | |
| **0.1xQ2 (Pre):** | 0.306 | cfs |
| **Q10 (Pre):** | 4.738 | cfs |
| **# of Ordinates:** | 100 | |
| **Incremental Q (Pre):** | 0.04432 | cfs |
| **Total Hourly Data:** | 498244 | hours |

**The proposed BMP:** PASSED

| Interval | Pre-project Flow (cfs) | Pre-project Hours | Pre-project % Time Exceeding | Post-project Hours | Post-project % Time Exceeding | Percentage | Pass/Fail |
|---|---|---|---|---|---|---|---|
| 0 | 0.306 | 2313 | 4.64E-03 | 490 | 9.83E-04 | 21% | Pass |
| 1 | 0.351 | 2011 | 4.04E-03 | 302 | 6.06E-04 | 15% | Pass |
| 2 | 0.395 | 1792 | 3.60E-03 | 239 | 4.80E-04 | 13% | Pass |
| 3 | 0.439 | 1537 | 3.08E-03 | 207 | 4.15E-04 | 13% | Pass |
| 4 | 0.483 | 1356 | 2.72E-03 | 180 | 3.61E-04 | 13% | Pass |
| 5 | 0.528 | 1259 | 2.53E-03 | 172 | 3.45E-04 | 14% | Pass |
| 6 | 0.572 | 1184 | 2.38E-03 | 162 | 3.25E-04 | 14% | Pass |
| 7 | 0.616 | 1139 | 2.29E-03 | 159 | 3.19E-04 | 14% | Pass |
| 8 | 0.661 | 1071 | 2.15E-03 | 145 | 2.91E-04 | 14% | Pass |
| 9 | 0.705 | 992 | 1.99E-03 | 133 | 2.67E-04 | 13% | Pass |
| 10 | 0.749 | 928 | 1.86E-03 | 125 | 2.51E-04 | 13% | Pass |
| 11 | 0.794 | 866 | 1.74E-03 | 118 | 2.37E-04 | 14% | Pass |
| 12 | 0.838 | 791 | 1.59E-03 | 108 | 2.17E-04 | 14% | Pass |
| 13 | 0.882 | 667 | 1.34E-03 | 98 | 1.97E-04 | 15% | Pass |
| 14 | 0.927 | 609 | 1.22E-03 | 92 | 1.85E-04 | 15% | Pass |
| 15 | 0.971 | 569 | 1.14E-03 | 88 | 1.77E-04 | 15% | Pass |
| 16 | 1.015 | 544 | 1.09E-03 | 84 | 1.69E-04 | 15% | Pass |
| 17 | 1.060 | 522 | 1.05E-03 | 81 | 1.63E-04 | 16% | Pass |
| 18 | 1.104 | 490 | 9.83E-04 | 74 | 1.49E-04 | 15% | Pass |
| 19 | 1.148 | 473 | 9.49E-04 | 69 | 1.38E-04 | 15% | Pass |
| 20 | 1.193 | 451 | 9.05E-04 | 61 | 1.22E-04 | 14% | Pass |
| 21 | 1.237 | 422 | 8.47E-04 | 58 | 1.16E-04 | 14% | Pass |
| 22 | 1.281 | 385 | 7.73E-04 | 53 | 1.06E-04 | 14% | Pass |
| 23 | 1.326 | 346 | 6.94E-04 | 46 | 9.23E-05 | 13% | Pass |
| 24 | 1.370 | 307 | 6.16E-04 | 46 | 9.23E-05 | 15% | Pass |
| 25 | 1.414 | 260 | 5.22E-04 | 45 | 9.03E-05 | 17% | Pass |
| 26 | 1.459 | 238 | 4.78E-04 | 41 | 8.23E-05 | 17% | Pass |
| 27 | 1.503 | 219 | 4.40E-04 | 39 | 7.83E-05 | 18% | Pass |
| 28 | 1.547 | 214 | 4.30E-04 | 39 | 7.83E-05 | 18% | Pass |
| 29 | 1.591 | 203 | 4.07E-04 | 32 | 6.42E-05 | 16% | Pass |
| 30 | 1.636 | 194 | 3.89E-04 | 31 | 6.22E-05 | 16% | Pass |
| 31 | 1.680 | 187 | 3.75E-04 | 28 | 5.62E-05 | 15% | Pass |
| 32 | 1.724 | 183 | 3.67E-04 | 26 | 5.22E-05 | 14% | Pass |
| 33 | 1.769 | 177 | 3.55E-04 | 24 | 4.82E-05 | 14% | Pass |
| 34 | 1.813 | 159 | 3.19E-04 | 21 | 4.21E-05 | 13% | Pass |
| 35 | 1.857 | 148 | 2.97E-04 | 20 | 4.01E-05 | 14% | Pass |
| 36 | 1.902 | 130 | 2.61E-04 | 18 | 3.61E-05 | 14% | Pass |
| 37 | 1.946 | 125 | 2.51E-04 | 18 | 3.61E-05 | 14% | Pass |
| 38 | 1.990 | 119 | 2.39E-04 | 17 | 3.41E-05 | 14% | Pass |
| 39 | 2.035 | 114 | 2.29E-04 | 16 | 3.21E-05 | 14% | Pass |
| 40 | 2.079 | 109 | 2.19E-04 | 13 | 2.61E-05 | 12% | Pass |
| 41 | 2.123 | 109 | 2.19E-04 | 13 | 2.61E-05 | 12% | Pass |
| 42 | 2.168 | 108 | 2.17E-04 | 11 | 2.21E-05 | 10% | Pass |
| 43 | 2.212 | 102 | 2.05E-04 | 11 | 2.21E-05 | 11% | Pass |
| 44 | 2.256 | 96 | 1.93E-04 | 10 | 2.01E-05 | 10% | Pass |
| 45 | 2.301 | 85 | 1.71E-04 | 10 | 2.01E-05 | 12% | Pass |
| 46 | 2.345 | 78 | 1.57E-04 | 9 | 1.81E-05 | 12% | Pass |
| 47 | 2.389 | 70 | 1.40E-04 | 8 | 1.61E-05 | 11% | Pass |
| 48 | 2.434 | 66 | 1.32E-04 | 8 | 1.61E-05 | 12% | Pass |
| 49 | 2.478 | 65 | 1.30E-04 | 8 | 1.61E-05 | 12% | Pass |
| 50 | 2.522 | 63 | 1.26E-04 | 7 | 1.40E-05 | 11% | Pass |
| 51 | 2.567 | 62 | 1.24E-04 | 7 | 1.40E-05 | 11% | Pass |
| 52 | 2.611 | 61 | 1.22E-04 | 6 | 1.20E-05 | 10% | Pass |
| 53 | 2.655 | 61 | 1.22E-04 | 5 | 1.00E-05 | 8% | Pass |

| | | | | | | | |
|---|---|---|---|---|---|---|---|
| 54 | 2.699 | 61 | 1.22E-04 | 4 | 8.03E-06 | 7% | Pass |
| 55 | 2.744 | 59 | 1.18E-04 | 4 | 8.03E-06 | 7% | Pass |
| 56 | 2.788 | 56 | 1.12E-04 | 4 | 8.03E-06 | 7% | Pass |
| 57 | 2.832 | 48 | 9.63E-05 | 4 | 8.03E-06 | 8% | Pass |
| 58 | 2.877 | 42 | 8.43E-05 | 4 | 8.03E-06 | 10% | Pass |
| 59 | 2.921 | 39 | 7.83E-05 | 2 | 4.01E-06 | 5% | Pass |
| 60 | 2.965 | 38 | 7.63E-05 | 2 | 4.01E-06 | 5% | Pass |
| 61 | 3.010 | 37 | 7.43E-05 | 2 | 4.01E-06 | 5% | Pass |
| 62 | 3.054 | 36 | 7.23E-05 | 2 | 4.01E-06 | 6% | Pass |
| 63 | 3.098 | 35 | 7.02E-05 | 2 | 4.01E-06 | 6% | Pass |
| 64 | 3.143 | 34 | 6.82E-05 | 2 | 4.01E-06 | 6% | Pass |
| 65 | 3.187 | 34 | 6.82E-05 | 2 | 4.01E-06 | 6% | Pass |
| 66 | 3.231 | 33 | 6.62E-05 | 2 | 4.01E-06 | 6% | Pass |
| 67 | 3.276 | 28 | 5.62E-05 | 2 | 4.01E-06 | 7% | Pass |
| 68 | 3.320 | 25 | 5.02E-05 | 2 | 4.01E-06 | 8% | Pass |
| 69 | 3.364 | 17 | 3.41E-05 | 2 | 4.01E-06 | 12% | Pass |
| 70 | 3.409 | 15 | 3.01E-05 | 2 | 4.01E-06 | 13% | Pass |
| 71 | 3.453 | 15 | 3.01E-05 | 2 | 4.01E-06 | 13% | Pass |
| 72 | 3.497 | 15 | 3.01E-05 | 2 | 4.01E-06 | 13% | Pass |
| 73 | 3.542 | 15 | 3.01E-05 | 2 | 4.01E-06 | 13% | Pass |
| 74 | 3.586 | 15 | 3.01E-05 | 2 | 4.01E-06 | 13% | Pass |
| 75 | 3.630 | 12 | 2.41E-05 | 2 | 4.01E-06 | 17% | Pass |
| 76 | 3.675 | 11 | 2.21E-05 | 1 | 2.01E-06 | 9% | Pass |
| 77 | 3.719 | 11 | 2.21E-05 | 1 | 2.01E-06 | 9% | Pass |
| 78 | 3.763 | 11 | 2.21E-05 | 1 | 2.01E-06 | 9% | Pass |
| 79 | 3.807 | 9 | 1.81E-05 | 1 | 2.01E-06 | 11% | Pass |
| 80 | 3.852 | 8 | 1.61E-05 | 1 | 2.01E-06 | 13% | Pass |
| 81 | 3.896 | 8 | 1.61E-05 | 1 | 2.01E-06 | 13% | Pass |
| 82 | 3.940 | 8 | 1.61E-05 | 1 | 2.01E-06 | 13% | Pass |
| 83 | 3.985 | 8 | 1.61E-05 | 1 | 2.01E-06 | 13% | Pass |
| 84 | 4.029 | 8 | 1.61E-05 | 1 | 2.01E-06 | 13% | Pass |
| 85 | 4.073 | 8 | 1.61E-05 | 1 | 2.01E-06 | 13% | Pass |
| 86 | 4.118 | 8 | 1.61E-05 | 1 | 2.01E-06 | 13% | Pass |
| 87 | 4.162 | 7 | 1.40E-05 | 1 | 2.01E-06 | 14% | Pass |
| 88 | 4.206 | 7 | 1.40E-05 | 1 | 2.01E-06 | 14% | Pass |
| 89 | 4.251 | 7 | 1.40E-05 | 1 | 2.01E-06 | 14% | Pass |
| 90 | 4.295 | 7 | 1.40E-05 | 1 | 2.01E-06 | 14% | Pass |
| 91 | 4.339 | 7 | 1.40E-05 | 1 | 2.01E-06 | 14% | Pass |
| 92 | 4.384 | 7 | 1.40E-05 | 1 | 2.01E-06 | 14% | Pass |
| 93 | 4.428 | 6 | 1.20E-05 | 1 | 2.01E-06 | 17% | Pass |
| 94 | 4.472 | 6 | 1.20E-05 | 1 | 2.01E-06 | 17% | Pass |
| 95 | 4.517 | 6 | 1.20E-05 | 1 | 2.01E-06 | 17% | Pass |
| 96 | 4.561 | 6 | 1.20E-05 | 1 | 2.01E-06 | 17% | Pass |
| 97 | 4.605 | 6 | 1.20E-05 | 1 | 2.01E-06 | 17% | Pass |
| 98 | 4.650 | 6 | 1.20E-05 | 1 | 2.01E-06 | 17% | Pass |
| 99 | 4.694 | 6 | 1.20E-05 | 1 | 2.01E-06 | 17% | Pass |
| 100 | 4.738 | 5 | 1.00E-05 | 1 | 2.01E-06 | 20% | Pass |

# Node POC_EQ

Flow Duration Curve Comparison

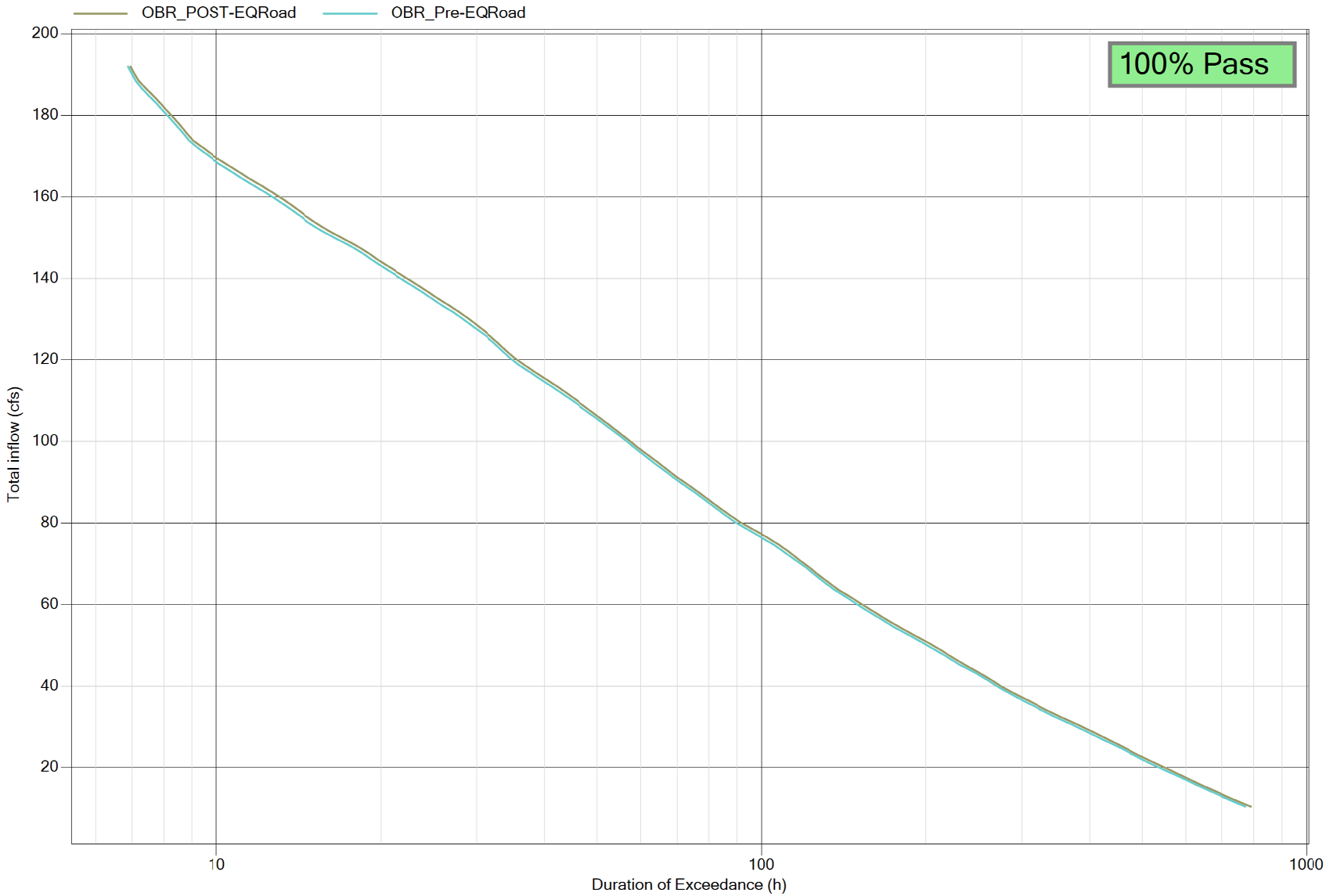

# Attachment 8

# Drawdown Graphs

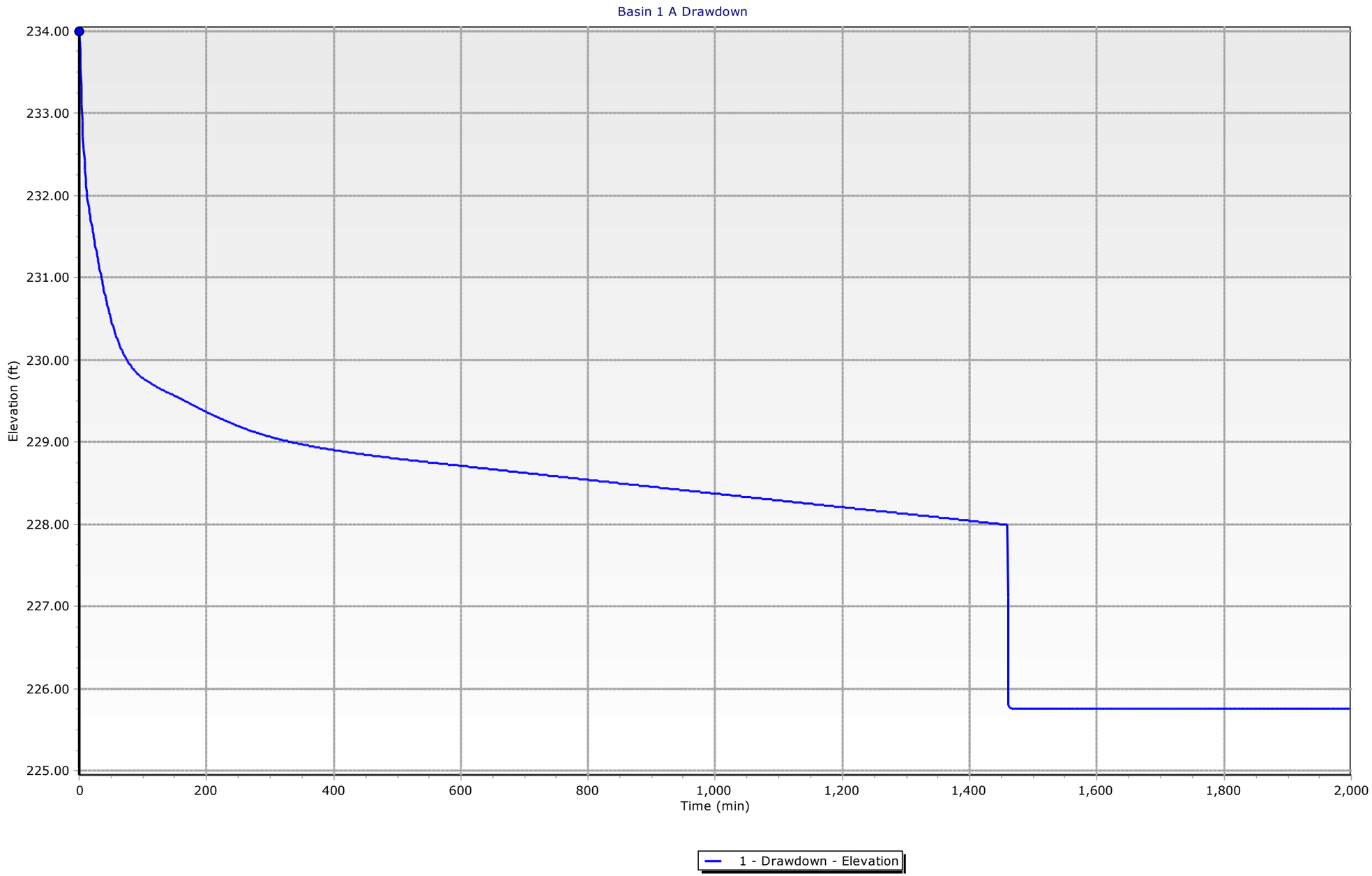
Basin 1 A Drawdown
234.00
233.00
232.00
231.00
230.00
229.00
228.00
227.00
226.00
225.00
Elevation (ft)
0
200
400
600
800
1,000
1,200
1,400
1,600
1,800
2,000
Time (min)
1 - Drawdown - Elevation

# Table of Contents


| | | |
|---|---|---|
| 1 (OUT) | Time vs. Elevation | 1 |
| Outlet#1-with Culvert | Outlet Input Data | 4 |
| 1 | Elevation-Volume-Flow Table (Pond) | 10 |

# System1000 Drawdown

Subsection: Time vs. Elevation
Label: 1 (OUT)
Scenario: 100

Return Event: 100 years
Storm Event:

## Time vs. Elevation (ft)

**Output Time increment = 1 min**
**Time on left represents time for first value in each row.**

| Time (min) | Elevation (ft) | Elevation (ft) | Elevation (ft) | Elevation (ft) | Elevation (ft) |
|---|---|---|---|---|---|
| 0 | 235.00 | 234.78 | 234.56 | 234.34 | 234.12 |
| 5 | 233.92 | 233.74 | 233.58 | 233.44 | 233.32 |
| 10 | 233.21 | 233.11 | 233.03 | 232.95 | 232.88 |
| 15 | 232.82 | 232.76 | 232.71 | 232.66 | 232.62 |
| 20 | 232.58 | 232.54 | 232.50 | 232.46 | 232.42 |
| 25 | 232.38 | 232.35 | 232.31 | 232.27 | 232.24 |
| 30 | 232.20 | 232.17 | 232.13 | 232.10 | 232.06 |
| 35 | 232.03 | 231.99 | 231.96 | 231.93 | 231.89 |
| 40 | 231.86 | 231.83 | 231.80 | 231.77 | 231.74 |
| 45 | 231.71 | 231.68 | 231.66 | 231.63 | 231.60 |
| 50 | 231.58 | 231.55 | 231.53 | 231.50 | 231.48 |
| 55 | 231.46 | 231.44 | 231.41 | 231.39 | 231.37 |
| 60 | 231.35 | 231.33 | 231.32 | 231.30 | 231.28 |
| 65 | 231.26 | 231.25 | 231.23 | 231.21 | 231.20 |
| 70 | 231.18 | 231.17 | 231.15 | 231.14 | 231.13 |
| 75 | 231.11 | 231.10 | 231.09 | 231.08 | 231.06 |
| 80 | 231.05 | 231.04 | 231.03 | 231.02 | 231.02 |
| 85 | 231.01 | 231.00 | 230.99 | 230.98 | 230.98 |
| 90 | 230.97 | 230.96 | 230.95 | 230.94 | 230.93 |
| 95 | 230.92 | 230.92 | 230.91 | 230.90 | 230.89 |
| 100 | 230.88 | 230.87 | 230.86 | 230.85 | 230.84 |
| 105 | 230.83 | 230.82 | 230.81 | 230.80 | 230.79 |
| 110 | 230.78 | 230.77 | 230.76 | 230.76 | 230.75 |
| 115 | 230.74 | 230.73 | 230.72 | 230.71 | 230.70 |
| 120 | 230.69 | 230.68 | 230.67 | 230.66 | 230.65 |
| 125 | 230.65 | 230.64 | 230.63 | 230.62 | 230.61 |
| 130 | 230.60 | 230.59 | 230.58 | 230.57 | 230.56 |
| 135 | 230.56 | 230.55 | 230.54 | 230.53 | 230.52 |
| 140 | 230.51 | 230.50 | 230.49 | 230.49 | 230.48 |
| 145 | 230.47 | 230.46 | 230.45 | 230.44 | 230.44 |
| 150 | 230.43 | 230.42 | 230.41 | 230.41 | 230.40 |
| 155 | 230.39 | 230.38 | 230.38 | 230.37 | 230.36 |
| 160 | 230.36 | 230.35 | 230.34 | 230.33 | 230.33 |
| 165 | 230.32 | 230.31 | 230.30 | 230.29 | 230.29 |
| 170 | 230.28 | 230.27 | 230.26 | 230.25 | 230.24 |
| 175 | 230.24 | 230.23 | 230.22 | 230.21 | 230.20 |
| 180 | 230.20 | 230.19 | 230.18 | 230.17 | 230.16 |
| 185 | 230.16 | 230.15 | 230.14 | 230.13 | 230.12 |
| 190 | 230.12 | 230.11 | 230.10 | 230.09 | 230.09 |
| 195 | 230.08 | 230.07 | 230.06 | 230.05 | 230.05 |

# System1000 Drawdown

Subsection: Time vs. Elevation
Label: 1 (OUT)
Scenario: 100

Return Event: 100 years
Storm Event:

## Time vs. Elevation (ft)

**Output Time increment = 1 min**
**Time on left represents time for first value in each row.**

| Time (min) | Elevation (ft) | Elevation (ft) | Elevation (ft) | Elevation (ft) | Elevation (ft) |
|---|---|---|---|---|---|
| 200 | 230.04 | 230.03 | 230.02 | 230.02 | 230.01 |
| 205 | 230.00 | 229.99 | 229.99 | 229.98 | 229.97 |
| 210 | 229.96 | 229.96 | 229.95 | 229.94 | 229.94 |
| 215 | 229.93 | 229.92 | 229.91 | 229.91 | 229.90 |
| 220 | 229.89 | 229.89 | 229.88 | 229.87 | 229.86 |
| 225 | 229.86 | 229.85 | 229.84 | 229.84 | 229.83 |
| 230 | 229.82 | 229.82 | 229.81 | 229.80 | 229.79 |
| 235 | 229.79 | 229.78 | 229.77 | 229.77 | 229.76 |
| 240 | 229.75 | 229.75 | 229.74 | 229.73 | 229.73 |
| 245 | 229.72 | 229.72 | 229.71 | 229.70 | 229.70 |
| 250 | 229.69 | 229.68 | 229.68 | 229.67 | 229.66 |
| 255 | 229.66 | 229.65 | 229.65 | 229.64 | 229.63 |
| 260 | 229.63 | 229.62 | 229.62 | 229.61 | 229.60 |
| 265 | 229.60 | 229.59 | 229.59 | 229.58 | 229.57 |
| 270 | 229.57 | 229.56 | 229.56 | 229.55 | 229.54 |
| 275 | 229.54 | 229.53 | 229.53 | 229.52 | 229.52 |
| 280 | 229.51 | 229.50 | 229.50 | 229.49 | 229.49 |
| 285 | 229.48 | 229.48 | 229.47 | 229.47 | 229.46 |
| 290 | 229.46 | 229.45 | 229.45 | 229.44 | 229.44 |
| 295 | 229.43 | 229.42 | 229.42 | 229.41 | 229.41 |
| 300 | 229.40 | 229.40 | 229.39 | 229.39 | 229.38 |
| 305 | 229.38 | 229.38 | 229.37 | 229.37 | 229.36 |
| 310 | 229.36 | 229.35 | 229.35 | 229.34 | 229.34 |
| 315 | 229.33 | 229.33 | 229.32 | 229.32 | 229.32 |
| 320 | 229.31 | 229.31 | 229.30 | 229.30 | 229.29 |
| 325 | 229.29 | 229.29 | 229.28 | 229.28 | 229.27 |
| 330 | 229.27 | 229.27 | 229.26 | 229.26 | 229.25 |
| 335 | 229.25 | 229.25 | 229.24 | 229.24 | 229.24 |
| 340 | 229.23 | 229.23 | 229.23 | 229.22 | 229.22 |
| 345 | 229.22 | 229.21 | 229.21 | 229.21 | 229.21 |
| 350 | 229.20 | 229.20 | 229.20 | 229.20 | 229.19 |
| 355 | 229.19 | 229.19 | 229.18 | 229.18 | 229.18 |
| 360 | 229.18 | 229.17 | 229.17 | 229.17 | 229.17 |
| 365 | 229.16 | 229.16 | 229.16 | 229.16 | 229.16 |
| 370 | 229.15 | 229.15 | 229.15 | 229.15 | 229.14 |
| 375 | 229.14 | 229.14 | 229.14 | 229.13 | 229.13 |
| 380 | 229.13 | 229.13 | 229.13 | 229.12 | 229.12 |
| 385 | 229.12 | 229.12 | 229.11 | 229.11 | 229.11 |
| 390 | 229.11 | 229.11 | 229.10 | 229.10 | 229.10 |
| 395 | 229.10 | 229.10 | 229.09 | 229.09 | 229.09 |
| 400 | 229.09 | 229.09 | 229.08 | 229.08 | 229.08 |

# System1000 Drawdown

Subsection: Time vs. Elevation
Label: 1 (OUT)
Scenario: 100

Return Event: 100 years
Storm Event:

**Time vs. Elevation (ft)**

**Output Time increment = 1 min**
**Time on left represents time for first value in each row.**

| Time (min) | Elevation (ft) | Elevation (ft) | Elevation (ft) | Elevation (ft) | Elevation (ft) |
|---|---|---|---|---|---|
| 405 | 229.08 | 229.08 | 229.07 | 229.07 | 229.07 |
| 410 | 229.07 | 229.07 | 229.07 | 229.06 | 229.06 |
| 415 | 229.06 | 229.06 | 229.06 | 229.06 | 229.05 |
| 420 | 229.05 | 229.05 | 229.05 | 229.05 | 229.05 |
| 425 | 229.04 | 229.04 | 229.04 | 229.04 | 229.04 |
| 430 | 229.04 | 229.04 | 229.03 | 229.03 | 229.03 |
| 435 | 229.03 | 229.03 | 229.03 | 229.03 | 229.02 |
| 440 | 229.02 | 229.02 | 229.02 | 229.02 | 229.02 |
| 445 | 229.02 | 229.01 | 229.01 | 229.01 | 229.01 |
| 450 | 229.01 | 229.01 | 229.01 | 229.01 | 229.00 |
| 455 | 229.00 | 229.00 | 229.00 | 229.00 | 229.00 |
| 460 | 229.00 | 229.00 | 229.00 | 228.99 | 228.99 |
| 465 | 228.99 | 228.99 | 228.99 | 228.99 | 228.99 |
| 470 | 228.99 | 228.99 | 228.98 | 228.98 | 228.98 |
| 475 | 228.98 | 228.98 | 228.98 | 228.98 | 228.98 |
| 480 | 228.98 | 228.98 | 228.97 | 228.97 | 228.97 |
| 485 | 228.97 | 228.97 | 228.97 | 228.97 | 228.97 |
| 490 | 228.97 | 228.97 | 228.97 | 228.96 | 228.96 |
| 495 | 228.96 | 228.96 | 228.96 | 228.96 | 228.96 |
| 500 | 228.96 | 228.96 | 228.96 | 228.96 | 228.96 |
| 505 | 228.95 | 228.95 | 228.95 | 228.95 | 228.95 |
| 510 | 228.95 | 228.95 | 228.95 | 228.95 | 228.95 |
| 515 | 228.95 | 228.95 | 228.94 | 228.94 | 228.94 |
| 520 | 228.94 | 228.94 | 228.94 | 228.94 | 228.94 |
| 525 | 228.94 | (N/A) | (N/A) | (N/A) | (N/A) |

# System1000 Drawdown

Subsection: Outlet Input Data
Label: Outlet#1-with Culvert
Scenario: 100

Return Event: 100 years
Storm Event:

| Requested Pond Water Surface Elevations | |
|---|---|
| Minimum (Headwater) | 224.99 ft |
| Increment (Headwater) | 0.10 ft |
| Maximum (Headwater) | 235.00 ft |

## Outlet Connectivity

| Structure Type | Outlet ID | Direction | Outfall | E1 (ft) | E2 (ft) |
|---|---|---|---|---|---|
| Inlet Box | Riser - 2 | Forward | Culvert - 2 | 232.50 | 235.00 |
| Culvert-Circular | Culvert - 2 | Forward | TW | 219.30 | 235.00 |
| Orifice-Area | Orifice - HF -Smaller | Forward | Culvert - 1 | 231.00 | 235.00 |
| Orifice-Area | Orifice - HF A | Forward | Culvert - 1 | 231.00 | 235.00 |
| Inlet Box | Riser - 1 | Forward | Culvert - 1 | 232.50 | 235.00 |
| Orifice-Circular | Orifice - LF A | Forward | Culvert - 1 | 228.75 | 235.00 |
| Culvert-Circular | Culvert - 1 | Forward | TW | 219.30 | 235.00 |
| Orifice-Circular | Orifice - Underdrain | Forward | TW | 228.75 | 235.00 |
| Tailwater Settings | Tailwater | | | (N/A) | (N/A) |

# System1000 Drawdown

Subsection: Outlet Input Data
Label: Outlet#1-with Culvert
Scenario: 100

Return Event: 100 years
Storm Event:

| Structure ID: Orifice - HF A<br>Structure Type: Orifice-Area | |
|---|---|
| Number of Openings | 2 |
| Elevation | 231.00 ft |
| Orifice Area | 1.0 ft² |
| Top Elevation | 232.00 ft |
| Datum Elevation | 231.00 ft |
| Orifice Coefficient | 0.600 |

| Structure ID: Orifice - LF A<br>Structure Type: Orifice-Circular | |
|---|---|
| Number of Openings | 6 |
| Elevation | 228.75 ft |
| Orifice Diameter | 6.0 in |
| Orifice Coefficient | 0.600 |

| Structure ID: Riser - 1<br>Structure Type: Inlet Box | |
|---|---|
| Number of Openings | 1 |
| Elevation | 232.50 ft |
| Orifice Area | 24.0 ft² |
| Orifice Coefficient | 0.600 |
| Weir Length | 20.00 ft |
| Weir Coefficient | 3.00 (ft^0.5)/s |
| K Reverse | 1.000 |
| Manning's n | 0.000 |
| Kev, Charged Riser | 0.000 |
| Weir Submergence | False |
| Orifice H to crest | False |

| Structure ID: Riser - 2<br>Structure Type: Inlet Box | |
|---|---|
| Number of Openings | 1 |
| Elevation | 232.50 ft |
| Orifice Area | 24.0 ft² |
| Orifice Coefficient | 0.600 |
| Weir Length | 20.00 ft |
| Weir Coefficient | 3.00 (ft^0.5)/s |
| K Reverse | 1.000 |
| Manning's n | 0.000 |
| Kev, Charged Riser | 0.000 |
| Weir Submergence | False |

# System1000 Drawdown

Subsection: Outlet Input Data
Label: Outlet#1-with Culvert
Scenario: 100

Return Event: 100 years
Storm Event:

| Structure ID: Riser - 2<br>Structure Type: Inlet Box | |
|---|---|
| Orifice H to crest | False |

# System1000 Drawdown

Subsection: Outlet Input Data
Label: Outlet#1-with Culvert
Scenario: 100

Return Event: 100 years
Storm Event:

| Structure ID: Culvert - 1<br>Structure Type: Culvert-Circular | |
|---|---|
| Number of Barrels | 1 |
| Diameter | 36.0 in |
| Length | 61.45 ft |
| Length (Computed Barrel) | 61.46 ft |
| Slope (Computed) | 0.021 ft/ft |

| Outlet Control Data | |
|---|---|
| Manning's n | 0.013 |
| Ke | 0.200 |
| Kb | 0.007 |
| Kr | 0.200 |
| Convergence Tolerance | 0.00 ft |

| Inlet Control Data | |
|---|---|
| Equation Form | Form 1 |
| K | 0.0045 |
| M | 2.0000 |
| C | 0.0317 |
| Y | 0.6900 |
| T1 ratio (HW/D) | 1.085 |
| T2 ratio (HW/D) | 1.187 |
| Slope Correction Factor | -0.500 |

Use unsubmerged inlet control 0 equation below T1 elevation.
Use submerged inlet control 0 equation above T2 elevation

In transition zone between unsubmerged and submerged inlet control,
interpolate between flows at T1 & T2...

| | | | |
|---|---|---|---|
| T1 Elevation | 222.55 ft | T1 Flow | 42.85 ft³/s |
| T2 Elevation | 222.86 ft | T2 Flow | 48.97 ft³/s |

# System1000 Drawdown

Subsection: Outlet Input Data
Label: Outlet#1-with Culvert
Scenario: 100

Return Event: 100 years
Storm Event:

| Structure ID: Culvert - 2<br>Structure Type: Culvert-Circular | |
|---|---|
| Number of Barrels | 1 |
| Diameter | 36.0 in |
| Length | 61.45 ft |
| Length (Computed Barrel) | 61.46 ft |
| Slope (Computed) | 0.021 ft/ft |

| Outlet Control Data | |
|---|---|
| Manning's n | 0.013 |
| Ke | 0.200 |
| Kb | 0.007 |
| Kr | 0.200 |
| Convergence Tolerance | 0.00 ft |

| Inlet Control Data | |
|---|---|
| Equation Form | Form 1 |
| K | 0.0045 |
| M | 2.0000 |
| C | 0.0317 |
| Y | 0.6900 |
| T1 ratio (HW/D) | 1.085 |
| T2 ratio (HW/D) | 1.187 |
| Slope Correction Factor | -0.500 |

Use unsubmerged inlet control 0 equation below T1 elevation.
Use submerged inlet control 0 equation above T2 elevation

In transition zone between unsubmerged and submerged inlet control,
interpolate between flows at T1 & T2...

| | | | |
|---|---|---|---|
| T1 Elevation | 222.55 ft | T1 Flow | 42.85 ft³/s |
| T2 Elevation | 222.86 ft | T2 Flow | 48.97 ft³/s |

# System1000 Drawdown

Subsection: Outlet Input Data
Label: Outlet#1-with Culvert
Scenario: 100

Return Event: 100 years
Storm Event:

| Structure ID: Orifice - HF-Smaller<br>Structure Type: Orifice-Area | |
|---|---|
| Number of Openings | 4 |
| Elevation | 231.00 ft |
| Orifice Area | 0.8 ft² |
| Top Elevation | 231.75 ft |
| Datum Elevation | 231.00 ft |
| Orifice Coefficient | 0.600 |

| Structure ID: Orifice - Underdrain<br>Structure Type: Orifice-Circular | |
|---|---|
| Number of Openings | 1 |
| Elevation | 228.75 ft |
| Orifice Diameter | 7.0 in |
| Orifice Coefficient | 0.600 |

| Structure ID: TW<br>Structure Type: TW Setup, DS Channel | |
|---|---|
| Tailwater Type | Free Outfall |

| Convergence Tolerances | |
|---|---|
| Maximum Iterations | 30 |
| Tailwater Tolerance (Minimum) | 0.01 ft |
| Tailwater Tolerance (Maximum) | 0.50 ft |
| Headwater Tolerance (Minimum) | 0.01 ft |
| Headwater Tolerance (Maximum) | 0.50 ft |
| Flow Tolerance (Minimum) | 0.001 ft³/s |
| Flow Tolerance (Maximum) | 10.000 ft³/s |

# System1000 Drawdown

Subsection: Elevation-Volume-Flow Table (Pond)
Label: 1
Scenario: 100

Return Event: 100 years
Storm Event:

| Infiltration | |
|---|---|
| Infiltration Method (Computed) | No Infiltration |

| Initial Conditions | |
|---|---|
| Elevation (Water Surface, Initial) | 235.00 ft |
| Volume (Initial) | 10.198 ac-ft |
| Flow (Initial Outlet) | 296.63 ft³/s |
| Flow (Initial Infiltration) | 0.00 ft³/s |
| Flow (Initial, Total) | 296.63 ft³/s |
| Time Increment | 1 min |

| Elevation (ft) | Outflow (ft³/s) | Storage (ac-ft) | Area (ft²) | Infiltration (ft³/s) | Flow (Total) (ft³/s) | 2S/t + O (ft³/s) |
|---|---|---|---|---|---|---|
| 224.99 | 0.00 | 0.000 | 10.000 | 0.00 | 0.00 | 0.00 |
| 225.09 | 0.00 | 0.000 | 10.033 | 0.00 | 0.00 | 0.03 |
| 225.19 | 0.00 | 0.000 | 10.065 | 0.00 | 0.00 | 0.07 |
| 225.29 | 0.00 | 0.000 | 10.098 | 0.00 | 0.00 | 0.10 |
| 225.39 | 0.00 | 0.000 | 10.131 | 0.00 | 0.00 | 0.13 |
| 225.49 | 0.00 | 0.000 | 10.163 | 0.00 | 0.00 | 0.17 |
| 225.59 | 0.00 | 0.000 | 10.196 | 0.00 | 0.00 | 0.20 |
| 225.69 | 0.00 | 0.000 | 10.229 | 0.00 | 0.00 | 0.24 |
| 225.79 | 0.00 | 0.000 | 10.262 | 0.00 | 0.00 | 0.27 |
| 225.89 | 0.00 | 0.000 | 10.295 | 0.00 | 0.00 | 0.30 |
| 225.99 | 0.00 | 0.000 | 10.328 | 0.00 | 0.00 | 0.34 |
| 226.09 | 0.00 | 0.000 | 10.361 | 0.00 | 0.00 | 0.37 |
| 226.19 | 0.00 | 0.000 | 10.394 | 0.00 | 0.00 | 0.41 |
| 226.29 | 0.00 | 0.000 | 10.427 | 0.00 | 0.00 | 0.44 |
| 226.39 | 0.00 | 0.000 | 10.461 | 0.00 | 0.00 | 0.48 |
| 226.49 | 0.00 | 0.000 | 10.494 | 0.00 | 0.00 | 0.51 |
| 226.59 | 0.00 | 0.000 | 10.527 | 0.00 | 0.00 | 0.55 |
| 226.69 | 0.00 | 0.000 | 10.561 | 0.00 | 0.00 | 0.58 |
| 226.79 | 0.00 | 0.000 | 10.594 | 0.00 | 0.00 | 0.62 |
| 226.89 | 0.00 | 0.000 | 10.628 | 0.00 | 0.00 | 0.65 |
| 226.99 | 0.00 | 0.000 | 10.661 | 0.00 | 0.00 | 0.69 |
| 227.09 | 0.00 | 0.000 | 10.695 | 0.00 | 0.00 | 0.72 |
| 227.19 | 0.00 | 0.001 | 10.729 | 0.00 | 0.00 | 0.76 |
| 227.29 | 0.00 | 0.001 | 10.762 | 0.00 | 0.00 | 0.80 |
| 227.39 | 0.00 | 0.001 | 10.796 | 0.00 | 0.00 | 0.83 |
| 227.49 | 0.00 | 0.001 | 10.830 | 0.00 | 0.00 | 0.87 |
| 227.59 | 0.00 | 0.001 | 10.864 | 0.00 | 0.00 | 0.90 |
| 227.69 | 0.00 | 0.001 | 10.898 | 0.00 | 0.00 | 0.94 |
| 227.79 | 0.00 | 0.001 | 10.932 | 0.00 | 0.00 | 0.98 |

# System1000 Drawdown

Subsection: Elevation-Volume-Flow Table (Pond) Return Event: 100 years
Label: 1 Storm Event:
Scenario: 100

| Elevation (ft) | Outflow (ft³/s) | Storage (ac-ft) | Area (ft²) | Infiltration (ft³/s) | Flow (Total) (ft³/s) | 2S/t + O (ft³/s) |
|---|---|---|---|---|---|---|
| 227.89 | 0.00 | 0.001 | 10.966 | 0.00 | 0.00 | 1.01 |
| 227.99 | 0.00 | 0.001 | 11.000 | 0.00 | 0.00 | 1.05 |
| 228.09 | 0.00 | 0.099 | 45,979.740 | 0.00 | 0.00 | 143.47 |
| 228.19 | 0.00 | 0.205 | 46,473.064 | 0.00 | 0.00 | 297.55 |
| 228.29 | 0.00 | 0.312 | 46,969.020 | 0.00 | 0.00 | 453.29 |
| 228.39 | 0.00 | 0.421 | 47,467.608 | 0.00 | 0.00 | 610.68 |
| 228.49 | 0.00 | 0.530 | 47,968.829 | 0.00 | 0.00 | 769.74 |
| 228.59 | 0.00 | 0.641 | 48,472.682 | 0.00 | 0.00 | 930.48 |
| 228.69 | 0.00 | 0.753 | 48,979.167 | 0.00 | 0.00 | 1,092.90 |
| 228.75 | 0.00 | 0.820 | 49,284.322 | 0.00 | 0.00 | 1,191.16 |
| 228.79 | 0.03 | 0.866 | 49,488.285 | 0.00 | 0.03 | 1,257.03 |
| 228.89 | 0.32 | 0.980 | 50,000.035 | 0.00 | 0.32 | 1,423.14 |
| 228.99 | 0.89 | 1.095 | 50,514.417 | 0.00 | 0.89 | 1,591.24 |
| 229.09 | 1.68 | 1.212 | 51,013.158 | 0.00 | 1.68 | 1,761.24 |
| 229.19 | 2.21 | 1.330 | 51,512.310 | 0.00 | 2.21 | 1,932.65 |
| 229.29 | 3.65 | 1.448 | 52,013.891 | 0.00 | 3.65 | 2,106.63 |
| 229.39 | 4.31 | 1.568 | 52,517.903 | 0.00 | 4.31 | 2,281.50 |
| 229.49 | 4.83 | 1.689 | 53,024.345 | 0.00 | 4.83 | 2,457.93 |
| 229.59 | 5.31 | 1.812 | 53,533.217 | 0.00 | 5.31 | 2,636.00 |
| 229.69 | 5.75 | 1.935 | 54,044.519 | 0.00 | 5.75 | 2,815.74 |
| 229.79 | 6.15 | 2.060 | 54,558.252 | 0.00 | 6.15 | 2,997.15 |
| 229.89 | 6.53 | 2.186 | 55,074.414 | 0.00 | 6.53 | 3,180.25 |
| 229.99 | 6.89 | 2.313 | 55,593.007 | 0.00 | 6.89 | 3,365.05 |
| 230.09 | 7.24 | 2.441 | 56,097.957 | 0.00 | 7.24 | 3,551.55 |
| 230.19 | 7.56 | 2.570 | 56,603.397 | 0.00 | 7.56 | 3,739.71 |
| 230.29 | 7.88 | 2.701 | 57,111.103 | 0.00 | 7.88 | 3,929.55 |
| 230.39 | 6.68 | 2.833 | 57,621.077 | 0.00 | 6.68 | 4,119.57 |
| 230.49 | 8.47 | 2.965 | 58,133.316 | 0.00 | 8.47 | 4,314.28 |
| 230.59 | 8.74 | 3.099 | 58,647.823 | 0.00 | 8.74 | 4,509.19 |
| 230.69 | 9.02 | 3.235 | 59,164.597 | 0.00 | 9.02 | 4,705.82 |
| 230.79 | 9.29 | 3.371 | 59,683.637 | 0.00 | 9.29 | 4,904.18 |
| 230.89 | 9.55 | 3.509 | 60,204.944 | 0.00 | 9.55 | 5,104.25 |
| 230.99 | 7.99 | 3.648 | 60,728.518 | 0.00 | 7.99 | 5,304.24 |
| 231.00 | 8.01 | 3.662 | 60,781.000 | 0.00 | 8.01 | 5,324.51 |
| 231.09 | 12.52 | 3.788 | 61,240.174 | 0.00 | 12.52 | 5,512.05 |
| 231.19 | 15.48 | 3.929 | 61,752.395 | 0.00 | 15.48 | 5,720.00 |
| 231.29 | 18.44 | 4.071 | 62,266.748 | 0.00 | 18.44 | 5,929.66 |
| 231.39 | 21.43 | 4.215 | 62,783.235 | 0.00 | 21.43 | 6,141.07 |
| 231.49 | 24.39 | 4.359 | 63,301.855 | 0.00 | 24.39 | 6,354.17 |
| 231.59 | 27.35 | 4.505 | 63,822.609 | 0.00 | 27.35 | 6,569.00 |
| 231.69 | 30.31 | 4.652 | 64,345.495 | 0.00 | 30.31 | 6,785.57 |
| 231.79 | 32.89 | 4.801 | 64,870.515 | 0.00 | 32.89 | 7,003.51 |
| 231.89 | 34.90 | 4.950 | 65,397.668 | 0.00 | 34.90 | 7,222.63 |

# System1000 Drawdown

Subsection: Elevation-Volume-Flow Table (Pond) Return Event: 100 years
Label: 1 Storm Event:
Scenario: 100

| Elevation (ft) | Outflow (ft³/s) | Storage (ac-ft) | Area (ft²) | Infiltration (ft³/s) | Flow (Total) (ft³/s) | 2S/t + O (ft³/s) |
|---|---|---|---|---|---|---|
| 231.99 | 36.85 | 5.101 | 65,926.954 | 0.00 | 36.85 | 7,443.46 |
| 232.09 | 38.33 | 5.253 | 66,444.358 | 0.00 | 38.33 | 7,665.56 |
| 232.19 | 39.72 | 5.406 | 66,962.221 | 0.00 | 39.72 | 7,889.29 |
| 232.29 | 41.02 | 5.560 | 67,482.094 | 0.00 | 41.02 | 8,114.66 |
| 232.39 | 42.28 | 5.716 | 68,003.978 | 0.00 | 42.28 | 8,341.74 |
| 232.49 | 43.54 | 5.873 | 68,527.872 | 0.00 | 43.54 | 8,570.55 |
| 232.50 | 43.66 | 5.888 | 68,580.372 | 0.00 | 43.66 | 8,593.52 |
| 232.59 | 47.98 | 6.031 | 69,053.776 | 0.00 | 47.98 | 8,804.29 |
| 232.69 | 55.80 | 6.190 | 69,581.690 | 0.00 | 55.80 | 9,043.17 |
| 232.79 | 65.74 | 6.350 | 70,111.615 | 0.00 | 65.74 | 9,285.93 |
| 232.89 | 77.34 | 6.512 | 70,643.550 | 0.00 | 77.34 | 9,532.13 |
| 232.99 | 90.34 | 6.674 | 71,177.495 | 0.00 | 90.34 | 9,781.49 |
| 233.09 | 104.62 | 6.838 | 71,737.450 | 0.00 | 104.62 | 10,033.96 |
| 233.19 | 120.06 | 7.004 | 72,302.277 | 0.00 | 120.06 | 10,289.46 |
| 233.29 | 136.53 | 7.170 | 72,869.318 | 0.00 | 136.53 | 10,547.89 |
| 233.39 | 154.08 | 7.338 | 73,438.574 | 0.00 | 154.08 | 10,809.28 |
| 233.49 | 172.34 | 7.508 | 74,010.045 | 0.00 | 172.34 | 11,073.28 |
| 233.59 | 189.89 | 7.678 | 74,583.731 | 0.00 | 189.89 | 11,338.49 |
| 233.69 | 206.00 | 7.850 | 75,159.632 | 0.00 | 206.00 | 11,604.18 |
| 233.79 | 220.12 | 8.023 | 75,737.748 | 0.00 | 220.12 | 11,869.79 |
| 233.89 | 234.38 | 8.198 | 76,318.078 | 0.00 | 234.38 | 12,137.48 |
| 233.99 | 248.69 | 8.374 | 76,900.624 | 0.00 | 248.69 | 12,407.16 |
| 234.09 | 262.75 | 8.551 | 77,273.083 | 0.00 | 262.75 | 12,678.21 |
| 234.19 | 276.49 | 8.728 | 77,622.815 | 0.00 | 276.49 | 12,950.10 |
| 234.29 | 288.72 | 8.907 | 77,973.336 | 0.00 | 288.72 | 13,221.65 |
| 234.39 | 289.84 | 9.086 | 78,324.646 | 0.00 | 289.84 | 13,483.27 |
| 234.49 | 290.96 | 9.267 | 78,676.747 | 0.00 | 290.96 | 13,746.07 |
| 234.59 | 292.09 | 9.448 | 79,027.185 | 0.00 | 292.09 | 14,010.03 |
| 234.69 | 293.19 | 9.629 | 79,378.130 | 0.00 | 293.19 | 14,275.14 |
| 234.79 | 294.31 | 9.812 | 79,729.852 | 0.00 | 294.31 | 14,541.44 |
| 234.89 | 295.41 | 9.996 | 80,082.352 | 0.00 | 295.41 | 14,808.90 |
| 234.99 | 296.51 | 10.180 | 80,435.630 | 0.00 | 296.51 | 15,077.53 |
| 235.00 | 296.63 | 10.198 | 80,471.000 | 0.00 | 296.63 | 15,104.47 |

# System1000 Drawdown

## Index

1

1 (Elevation-Volume-Flow Table (Pond))...

1 (Elevation-Volume-Flow Table (Pond), 100 years (100))...10, 11, 12

1 (OUT) (Time vs. Elevation)...

1 (OUT) (Time vs. Elevation, 100 years (100))...1, 2, 3

O

Outlet#1-with Culvert (Outlet Input Data)...

Outlet#1-with Culvert (Outlet Input Data, 100 years (100))...4, 5, 6, 7, 8, 9

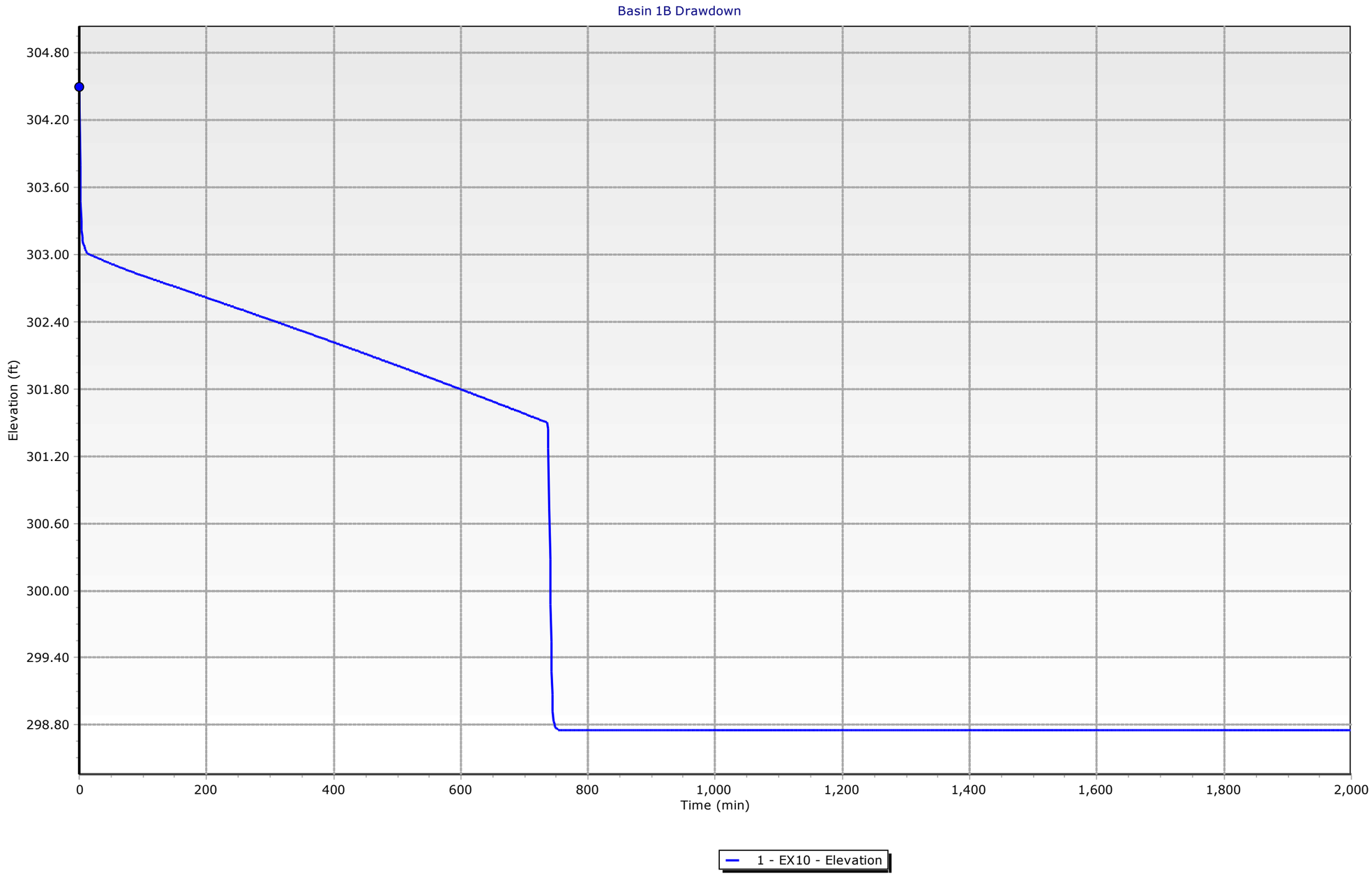
Basin 1B Drawdown
304.80
304.20
303.60
303.00
302.40
301.80
301.20
300.60
300.00
299.40
298.80
Elevation (ft)
0
200
400
600
800
1,000
1,200
1,400
1,600
1,800
2,000
Time (min)
1 - EX10 - Elevation

# Table of Contents


| | | |
|---|---|---|
| 1 (OUT) | Time vs. Elevation | 1 |
| Outlet#1 | Outlet Input Data | 11 |
| 1 | Elevation-Volume-Flow Table (Pond) | 14 |

# Basin 1B

Subsection: Time vs. Elevation
Label: 1 (OUT)
Scenario: EX10

Return Event: 100 years
Storm Event:

## Time vs. Elevation (ft)

**Output Time increment = 1 min**
**Time on left represents time for first value in each row.**

| Time (min) | Elevation (ft) | Elevation (ft) | Elevation (ft) | Elevation (ft) | Elevation (ft) |
|---|---|---|---|---|---|
| 0 | 304.50 | 303.80 | 303.47 | 303.31 | 303.21 |
| 5 | 303.15 | 303.12 | 303.09 | 303.07 | 303.05 |
| 10 | 303.04 | 303.03 | 303.02 | 303.01 | 303.01 |
| 15 | 303.01 | 303.00 | 303.00 | 303.00 | 302.99 |
| 20 | 302.99 | 302.99 | 302.99 | 302.98 | 302.98 |
| 25 | 302.98 | 302.98 | 302.97 | 302.97 | 302.97 |
| 30 | 302.97 | 302.96 | 302.96 | 302.96 | 302.96 |
| 35 | 302.95 | 302.95 | 302.95 | 302.95 | 302.94 |
| 40 | 302.94 | 302.94 | 302.94 | 302.94 | 302.93 |
| 45 | 302.93 | 302.93 | 302.93 | 302.92 | 302.92 |
| 50 | 302.92 | 302.92 | 302.91 | 302.91 | 302.91 |
| 55 | 302.91 | 302.91 | 302.90 | 302.90 | 302.90 |
| 60 | 302.90 | 302.89 | 302.89 | 302.89 | 302.89 |
| 65 | 302.88 | 302.88 | 302.88 | 302.88 | 302.88 |
| 70 | 302.87 | 302.87 | 302.87 | 302.87 | 302.86 |
| 75 | 302.86 | 302.86 | 302.86 | 302.86 | 302.85 |
| 80 | 302.85 | 302.85 | 302.85 | 302.85 | 302.84 |
| 85 | 302.84 | 302.84 | 302.84 | 302.84 | 302.83 |
| 90 | 302.83 | 302.83 | 302.83 | 302.82 | 302.82 |
| 95 | 302.82 | 302.82 | 302.82 | 302.81 | 302.81 |
| 100 | 302.81 | 302.81 | 302.81 | 302.80 | 302.80 |
| 105 | 302.80 | 302.80 | 302.80 | 302.80 | 302.79 |
| 110 | 302.79 | 302.79 | 302.79 | 302.79 | 302.78 |
| 115 | 302.78 | 302.78 | 302.78 | 302.78 | 302.77 |
| 120 | 302.77 | 302.77 | 302.77 | 302.77 | 302.76 |
| 125 | 302.76 | 302.76 | 302.76 | 302.76 | 302.75 |
| 130 | 302.75 | 302.75 | 302.75 | 302.75 | 302.74 |
| 135 | 302.74 | 302.74 | 302.74 | 302.74 | 302.74 |
| 140 | 302.73 | 302.73 | 302.73 | 302.73 | 302.73 |
| 145 | 302.72 | 302.72 | 302.72 | 302.72 | 302.72 |
| 150 | 302.71 | 302.71 | 302.71 | 302.71 | 302.71 |
| 155 | 302.70 | 302.70 | 302.70 | 302.70 | 302.70 |
| 160 | 302.69 | 302.69 | 302.69 | 302.69 | 302.69 |
| 165 | 302.68 | 302.68 | 302.68 | 302.68 | 302.68 |
| 170 | 302.68 | 302.67 | 302.67 | 302.67 | 302.67 |
| 175 | 302.67 | 302.66 | 302.66 | 302.66 | 302.66 |
| 180 | 302.66 | 302.65 | 302.65 | 302.65 | 302.65 |
| 185 | 302.65 | 302.64 | 302.64 | 302.64 | 302.64 |
| 190 | 302.64 | 302.63 | 302.63 | 302.63 | 302.63 |
| 195 | 302.63 | 302.62 | 302.62 | 302.62 | 302.62 |

# Basin 1B

Subsection: Time vs. Elevation
Label: 1 (OUT)
Scenario: EX10

Return Event: 100 years
Storm Event:

## Time vs. Elevation (ft)

**Output Time increment = 1 min**
**Time on left represents time for first value in each row.**

| Time (min) | Elevation (ft) | Elevation (ft) | Elevation (ft) | Elevation (ft) | Elevation (ft) |
|---|---|---|---|---|---|
| 200 | 302.62 | 302.61 | 302.61 | 302.61 | 302.61 |
| 205 | 302.61 | 302.61 | 302.60 | 302.60 | 302.60 |
| 210 | 302.60 | 302.60 | 302.59 | 302.59 | 302.59 |
| 215 | 302.59 | 302.59 | 302.58 | 302.58 | 302.58 |
| 220 | 302.58 | 302.58 | 302.57 | 302.57 | 302.57 |
| 225 | 302.57 | 302.57 | 302.56 | 302.56 | 302.56 |
| 230 | 302.56 | 302.56 | 302.55 | 302.55 | 302.55 |
| 235 | 302.55 | 302.55 | 302.54 | 302.54 | 302.54 |
| 240 | 302.54 | 302.54 | 302.53 | 302.53 | 302.53 |
| 245 | 302.53 | 302.53 | 302.52 | 302.52 | 302.52 |
| 250 | 302.52 | 302.52 | 302.51 | 302.51 | 302.51 |
| 255 | 302.51 | 302.51 | 302.50 | 302.50 | 302.50 |
| 260 | 302.50 | 302.50 | 302.49 | 302.49 | 302.49 |
| 265 | 302.49 | 302.49 | 302.48 | 302.48 | 302.48 |
| 270 | 302.48 | 302.48 | 302.47 | 302.47 | 302.47 |
| 275 | 302.47 | 302.47 | 302.46 | 302.46 | 302.46 |
| 280 | 302.46 | 302.46 | 302.45 | 302.45 | 302.45 |
| 285 | 302.45 | 302.45 | 302.44 | 302.44 | 302.44 |
| 290 | 302.44 | 302.44 | 302.44 | 302.43 | 302.43 |
| 295 | 302.43 | 302.43 | 302.43 | 302.42 | 302.42 |
| 300 | 302.42 | 302.42 | 302.42 | 302.41 | 302.41 |
| 305 | 302.41 | 302.41 | 302.41 | 302.40 | 302.40 |
| 310 | 302.40 | 302.40 | 302.40 | 302.39 | 302.39 |
| 315 | 302.39 | 302.39 | 302.39 | 302.38 | 302.38 |
| 320 | 302.38 | 302.38 | 302.37 | 302.37 | 302.37 |
| 325 | 302.37 | 302.37 | 302.36 | 302.36 | 302.36 |
| 330 | 302.36 | 302.36 | 302.35 | 302.35 | 302.35 |
| 335 | 302.35 | 302.35 | 302.34 | 302.34 | 302.34 |
| 340 | 302.34 | 302.34 | 302.33 | 302.33 | 302.33 |
| 345 | 302.33 | 302.33 | 302.32 | 302.32 | 302.32 |
| 350 | 302.32 | 302.32 | 302.31 | 302.31 | 302.31 |
| 355 | 302.31 | 302.31 | 302.30 | 302.30 | 302.30 |
| 360 | 302.30 | 302.30 | 302.29 | 302.29 | 302.29 |
| 365 | 302.29 | 302.29 | 302.28 | 302.28 | 302.28 |
| 370 | 302.28 | 302.28 | 302.27 | 302.27 | 302.27 |
| 375 | 302.27 | 302.27 | 302.26 | 302.26 | 302.26 |
| 380 | 302.26 | 302.26 | 302.25 | 302.25 | 302.25 |
| 385 | 302.25 | 302.25 | 302.24 | 302.24 | 302.24 |
| 390 | 302.24 | 302.24 | 302.23 | 302.23 | 302.23 |
| 395 | 302.23 | 302.22 | 302.22 | 302.22 | 302.22 |
| 400 | 302.22 | 302.21 | 302.21 | 302.21 | 302.21 |

# Basin 1B

Subsection: Time vs. Elevation
Label: 1 (OUT)
Scenario: EX10

Return Event: 100 years
Storm Event:

## Time vs. Elevation (ft)

**Output Time increment = 1 min**
**Time on left represents time for first value in each row.**

| Time (min) | Elevation (ft) | Elevation (ft) | Elevation (ft) | Elevation (ft) | Elevation (ft) |
|---|---|---|---|---|---|
| 405 | 302.21 | 302.20 | 302.20 | 302.20 | 302.20 |
| 410 | 302.20 | 302.19 | 302.19 | 302.19 | 302.19 |
| 415 | 302.19 | 302.18 | 302.18 | 302.18 | 302.18 |
| 420 | 302.18 | 302.17 | 302.17 | 302.17 | 302.17 |
| 425 | 302.17 | 302.16 | 302.16 | 302.16 | 302.16 |
| 430 | 302.15 | 302.15 | 302.15 | 302.15 | 302.15 |
| 435 | 302.14 | 302.14 | 302.14 | 302.14 | 302.14 |
| 440 | 302.13 | 302.13 | 302.13 | 302.13 | 302.13 |
| 445 | 302.12 | 302.12 | 302.12 | 302.12 | 302.12 |
| 450 | 302.11 | 302.11 | 302.11 | 302.11 | 302.11 |
| 455 | 302.10 | 302.10 | 302.10 | 302.10 | 302.10 |
| 460 | 302.09 | 302.09 | 302.09 | 302.09 | 302.08 |
| 465 | 302.08 | 302.08 | 302.08 | 302.08 | 302.07 |
| 470 | 302.07 | 302.07 | 302.07 | 302.07 | 302.06 |
| 475 | 302.06 | 302.06 | 302.06 | 302.06 | 302.05 |
| 480 | 302.05 | 302.05 | 302.05 | 302.04 | 302.04 |
| 485 | 302.04 | 302.04 | 302.04 | 302.03 | 302.03 |
| 490 | 302.03 | 302.03 | 302.03 | 302.02 | 302.02 |
| 495 | 302.02 | 302.02 | 302.02 | 302.01 | 302.01 |
| 500 | 302.01 | 302.01 | 302.01 | 302.00 | 302.00 |
| 505 | 302.00 | 302.00 | 301.99 | 301.99 | 301.99 |
| 510 | 301.99 | 301.99 | 301.98 | 301.98 | 301.98 |
| 515 | 301.98 | 301.98 | 301.97 | 301.97 | 301.97 |
| 520 | 301.97 | 301.97 | 301.96 | 301.96 | 301.96 |
| 525 | 301.96 | 301.95 | 301.95 | 301.95 | 301.95 |
| 530 | 301.95 | 301.94 | 301.94 | 301.94 | 301.94 |
| 535 | 301.94 | 301.93 | 301.93 | 301.93 | 301.93 |
| 540 | 301.93 | 301.92 | 301.92 | 301.92 | 301.92 |
| 545 | 301.91 | 301.91 | 301.91 | 301.91 | 301.91 |
| 550 | 301.90 | 301.90 | 301.90 | 301.90 | 301.90 |
| 555 | 301.89 | 301.89 | 301.89 | 301.89 | 301.88 |
| 560 | 301.88 | 301.88 | 301.88 | 301.88 | 301.87 |
| 565 | 301.87 | 301.87 | 301.87 | 301.87 | 301.86 |
| 570 | 301.86 | 301.86 | 301.86 | 301.85 | 301.85 |
| 575 | 301.85 | 301.85 | 301.85 | 301.84 | 301.84 |
| 580 | 301.84 | 301.84 | 301.84 | 301.83 | 301.83 |
| 585 | 301.83 | 301.83 | 301.82 | 301.82 | 301.82 |
| 590 | 301.82 | 301.82 | 301.81 | 301.81 | 301.81 |
| 595 | 301.81 | 301.81 | 301.80 | 301.80 | 301.80 |
| 600 | 301.80 | 301.79 | 301.79 | 301.79 | 301.79 |
| 605 | 301.79 | 301.78 | 301.78 | 301.78 | 301.78 |

# Basin 1B

Subsection: Time vs. Elevation
Label: 1 (OUT)
Scenario: EX10

Return Event: 100 years
Storm Event:

## Time vs. Elevation (ft)

**Output Time increment = 1 min**
**Time on left represents time for first value in each row.**

| Time (min) | Elevation (ft) | Elevation (ft) | Elevation (ft) | Elevation (ft) | Elevation (ft) |
|---|---|---|---|---|---|
| 610 | 301.78 | 301.77 | 301.77 | 301.77 | 301.77 |
| 615 | 301.76 | 301.76 | 301.76 | 301.76 | 301.76 |
| 620 | 301.75 | 301.75 | 301.75 | 301.75 | 301.75 |
| 625 | 301.74 | 301.74 | 301.74 | 301.74 | 301.73 |
| 630 | 301.73 | 301.73 | 301.73 | 301.73 | 301.72 |
| 635 | 301.72 | 301.72 | 301.72 | 301.71 | 301.71 |
| 640 | 301.71 | 301.71 | 301.71 | 301.70 | 301.70 |
| 645 | 301.70 | 301.70 | 301.70 | 301.69 | 301.69 |
| 650 | 301.69 | 301.69 | 301.68 | 301.68 | 301.68 |
| 655 | 301.68 | 301.68 | 301.67 | 301.67 | 301.67 |
| 660 | 301.67 | 301.66 | 301.66 | 301.66 | 301.66 |
| 665 | 301.66 | 301.65 | 301.65 | 301.65 | 301.65 |
| 670 | 301.65 | 301.64 | 301.64 | 301.64 | 301.64 |
| 675 | 301.63 | 301.63 | 301.63 | 301.63 | 301.63 |
| 680 | 301.62 | 301.62 | 301.62 | 301.62 | 301.61 |
| 685 | 301.61 | 301.61 | 301.61 | 301.61 | 301.60 |
| 690 | 301.60 | 301.60 | 301.60 | 301.59 | 301.59 |
| 695 | 301.59 | 301.59 | 301.59 | 301.58 | 301.58 |
| 700 | 301.58 | 301.58 | 301.57 | 301.57 | 301.57 |
| 705 | 301.57 | 301.57 | 301.56 | 301.56 | 301.56 |
| 710 | 301.56 | 301.55 | 301.55 | 301.55 | 301.55 |
| 715 | 301.55 | 301.54 | 301.54 | 301.54 | 301.54 |
| 720 | 301.54 | 301.53 | 301.53 | 301.53 | 301.53 |
| 725 | 301.52 | 301.52 | 301.52 | 301.52 | 301.52 |
| 730 | 301.51 | 301.51 | 301.51 | 301.51 | 301.50 |
| 735 | 301.50 | 301.50 | 301.44 | 301.26 | 300.74 |
| 740 | 300.28 | 299.88 | 299.55 | 299.27 | 299.07 |
| 745 | 298.92 | 298.84 | 298.80 | 298.79 | 298.78 |
| 750 | 298.77 | 298.76 | 298.76 | 298.76 | 298.76 |
| 755 | 298.75 | 298.75 | 298.75 | 298.75 | 298.75 |
| 760 | 298.75 | 298.75 | 298.75 | 298.75 | 298.75 |
| 765 | 298.75 | 298.75 | 298.75 | 298.75 | 298.75 |
| 770 | 298.75 | 298.75 | 298.75 | 298.75 | 298.75 |
| 775 | 298.75 | 298.75 | 298.75 | 298.75 | 298.75 |
| 780 | 298.75 | 298.75 | 298.75 | 298.75 | 298.75 |
| 785 | 298.75 | 298.75 | 298.75 | 298.75 | 298.75 |
| 790 | 298.75 | 298.75 | 298.75 | 298.75 | 298.75 |
| 795 | 298.75 | 298.75 | 298.75 | 298.75 | 298.75 |
| 800 | 298.75 | 298.75 | 298.75 | 298.75 | 298.75 |
| 805 | 298.75 | 298.75 | 298.75 | 298.75 | 298.75 |
| 810 | 298.75 | 298.75 | 298.75 | 298.75 | 298.75 |

# Basin 1B

Subsection: Time vs. Elevation
Label: 1 (OUT)
Scenario: EX10

Return Event: 100 years
Storm Event:

**Time vs. Elevation (ft)**

**Output Time increment = 1 min**
**Time on left represents time for first value in each row.**

| Time (min) | Elevation (ft) | Elevation (ft) | Elevation (ft) | Elevation (ft) | Elevation (ft) |
|---|---|---|---|---|---|
| 815 | 298.75 | 298.75 | 298.75 | 298.75 | 298.75 |
| 820 | 298.75 | 298.75 | 298.75 | 298.75 | 298.75 |
| 825 | 298.75 | 298.75 | 298.75 | 298.75 | 298.75 |
| 830 | 298.75 | 298.75 | 298.75 | 298.75 | 298.75 |
| 835 | 298.75 | 298.75 | 298.75 | 298.75 | 298.75 |
| 840 | 298.75 | 298.75 | 298.75 | 298.75 | 298.75 |
| 845 | 298.75 | 298.75 | 298.75 | 298.75 | 298.75 |
| 850 | 298.75 | 298.75 | 298.75 | 298.75 | 298.75 |
| 855 | 298.75 | 298.75 | 298.75 | 298.75 | 298.75 |
| 860 | 298.75 | 298.75 | 298.75 | 298.75 | 298.75 |
| 865 | 298.75 | 298.75 | 298.75 | 298.75 | 298.75 |
| 870 | 298.75 | 298.75 | 298.75 | 298.75 | 298.75 |
| 875 | 298.75 | 298.75 | 298.75 | 298.75 | 298.75 |
| 880 | 298.75 | 298.75 | 298.75 | 298.75 | 298.75 |
| 885 | 298.75 | 298.75 | 298.75 | 298.75 | 298.75 |
| 890 | 298.75 | 298.75 | 298.75 | 298.75 | 298.75 |
| 895 | 298.75 | 298.75 | 298.75 | 298.75 | 298.75 |
| 900 | 298.75 | 298.75 | 298.75 | 298.75 | 298.75 |
| 905 | 298.75 | 298.75 | 298.75 | 298.75 | 298.75 |
| 910 | 298.75 | 298.75 | 298.75 | 298.75 | 298.75 |
| 915 | 298.75 | 298.75 | 298.75 | 298.75 | 298.75 |
| 920 | 298.75 | 298.75 | 298.75 | 298.75 | 298.75 |
| 925 | 298.75 | 298.75 | 298.75 | 298.75 | 298.75 |
| 930 | 298.75 | 298.75 | 298.75 | 298.75 | 298.75 |
| 935 | 298.75 | 298.75 | 298.75 | 298.75 | 298.75 |
| 940 | 298.75 | 298.75 | 298.75 | 298.75 | 298.75 |
| 945 | 298.75 | 298.75 | 298.75 | 298.75 | 298.75 |
| 950 | 298.75 | 298.75 | 298.75 | 298.75 | 298.75 |
| 955 | 298.75 | 298.75 | 298.75 | 298.75 | 298.75 |
| 960 | 298.75 | 298.75 | 298.75 | 298.75 | 298.75 |
| 965 | 298.75 | 298.75 | 298.75 | 298.75 | 298.75 |
| 970 | 298.75 | 298.75 | 298.75 | 298.75 | 298.75 |
| 975 | 298.75 | 298.75 | 298.75 | 298.75 | 298.75 |
| 980 | 298.75 | 298.75 | 298.75 | 298.75 | 298.75 |
| 985 | 298.75 | 298.75 | 298.75 | 298.75 | 298.75 |
| 990 | 298.75 | 298.75 | 298.75 | 298.75 | 298.75 |
| 995 | 298.75 | 298.75 | 298.75 | 298.75 | 298.75 |
| 1,000 | 298.75 | 298.75 | 298.75 | 298.75 | 298.75 |
| 1,005 | 298.75 | 298.75 | 298.75 | 298.75 | 298.75 |
| 1,010 | 298.75 | 298.75 | 298.75 | 298.75 | 298.75 |
| 1,015 | 298.75 | 298.75 | 298.75 | 298.75 | 298.75 |

# Basin 1B

Subsection: Time vs. Elevation
Label: 1 (OUT)
Scenario: EX10

Return Event: 100 years
Storm Event:

**Time vs. Elevation (ft)**

**Output Time increment = 1 min**
**Time on left represents time for first value in each row.**

| Time (min) | Elevation (ft) | Elevation (ft) | Elevation (ft) | Elevation (ft) | Elevation (ft) |
|---|---|---|---|---|---|
| 1,020 | 298.75 | 298.75 | 298.75 | 298.75 | 298.75 |
| 1,025 | 298.75 | 298.75 | 298.75 | 298.75 | 298.75 |
| 1,030 | 298.75 | 298.75 | 298.75 | 298.75 | 298.75 |
| 1,035 | 298.75 | 298.75 | 298.75 | 298.75 | 298.75 |
| 1,040 | 298.75 | 298.75 | 298.75 | 298.75 | 298.75 |
| 1,045 | 298.75 | 298.75 | 298.75 | 298.75 | 298.75 |
| 1,050 | 298.75 | 298.75 | 298.75 | 298.75 | 298.75 |
| 1,055 | 298.75 | 298.75 | 298.75 | 298.75 | 298.75 |
| 1,060 | 298.75 | 298.75 | 298.75 | 298.75 | 298.75 |
| 1,065 | 298.75 | 298.75 | 298.75 | 298.75 | 298.75 |
| 1,070 | 298.75 | 298.75 | 298.75 | 298.75 | 298.75 |
| 1,075 | 298.75 | 298.75 | 298.75 | 298.75 | 298.75 |
| 1,080 | 298.75 | 298.75 | 298.75 | 298.75 | 298.75 |
| 1,085 | 298.75 | 298.75 | 298.75 | 298.75 | 298.75 |
| 1,090 | 298.75 | 298.75 | 298.75 | 298.75 | 298.75 |
| 1,095 | 298.75 | 298.75 | 298.75 | 298.75 | 298.75 |
| 1,100 | 298.75 | 298.75 | 298.75 | 298.75 | 298.75 |
| 1,105 | 298.75 | 298.75 | 298.75 | 298.75 | 298.75 |
| 1,110 | 298.75 | 298.75 | 298.75 | 298.75 | 298.75 |
| 1,115 | 298.75 | 298.75 | 298.75 | 298.75 | 298.75 |
| 1,120 | 298.75 | 298.75 | 298.75 | 298.75 | 298.75 |
| 1,125 | 298.75 | 298.75 | 298.75 | 298.75 | 298.75 |
| 1,130 | 298.75 | 298.75 | 298.75 | 298.75 | 298.75 |
| 1,135 | 298.75 | 298.75 | 298.75 | 298.75 | 298.75 |
| 1,140 | 298.75 | 298.75 | 298.75 | 298.75 | 298.75 |
| 1,145 | 298.75 | 298.75 | 298.75 | 298.75 | 298.75 |
| 1,150 | 298.75 | 298.75 | 298.75 | 298.75 | 298.75 |
| 1,155 | 298.75 | 298.75 | 298.75 | 298.75 | 298.75 |
| 1,160 | 298.75 | 298.75 | 298.75 | 298.75 | 298.75 |
| 1,165 | 298.75 | 298.75 | 298.75 | 298.75 | 298.75 |
| 1,170 | 298.75 | 298.75 | 298.75 | 298.75 | 298.75 |
| 1,175 | 298.75 | 298.75 | 298.75 | 298.75 | 298.75 |
| 1,180 | 298.75 | 298.75 | 298.75 | 298.75 | 298.75 |
| 1,185 | 298.75 | 298.75 | 298.75 | 298.75 | 298.75 |
| 1,190 | 298.75 | 298.75 | 298.75 | 298.75 | 298.75 |
| 1,195 | 298.75 | 298.75 | 298.75 | 298.75 | 298.75 |
| 1,200 | 298.75 | 298.75 | 298.75 | 298.75 | 298.75 |
| 1,205 | 298.75 | 298.75 | 298.75 | 298.75 | 298.75 |
| 1,210 | 298.75 | 298.75 | 298.75 | 298.75 | 298.75 |
| 1,215 | 298.75 | 298.75 | 298.75 | 298.75 | 298.75 |
| 1,220 | 298.75 | 298.75 | 298.75 | 298.75 | 298.75 |

# Basin 1B

Subsection: Time vs. Elevation
Label: 1 (OUT)
Scenario: EX10

Return Event: 100 years
Storm Event:

**Time vs. Elevation (ft)**

**Output Time increment = 1 min**
**Time on left represents time for first value in each row.**

| Time (min) | Elevation (ft) | Elevation (ft) | Elevation (ft) | Elevation (ft) | Elevation (ft) |
|---|---|---|---|---|---|
| 1,225 | 298.75 | 298.75 | 298.75 | 298.75 | 298.75 |
| 1,230 | 298.75 | 298.75 | 298.75 | 298.75 | 298.75 |
| 1,235 | 298.75 | 298.75 | 298.75 | 298.75 | 298.75 |
| 1,240 | 298.75 | 298.75 | 298.75 | 298.75 | 298.75 |
| 1,245 | 298.75 | 298.75 | 298.75 | 298.75 | 298.75 |
| 1,250 | 298.75 | 298.75 | 298.75 | 298.75 | 298.75 |
| 1,255 | 298.75 | 298.75 | 298.75 | 298.75 | 298.75 |
| 1,260 | 298.75 | 298.75 | 298.75 | 298.75 | 298.75 |
| 1,265 | 298.75 | 298.75 | 298.75 | 298.75 | 298.75 |
| 1,270 | 298.75 | 298.75 | 298.75 | 298.75 | 298.75 |
| 1,275 | 298.75 | 298.75 | 298.75 | 298.75 | 298.75 |
| 1,280 | 298.75 | 298.75 | 298.75 | 298.75 | 298.75 |
| 1,285 | 298.75 | 298.75 | 298.75 | 298.75 | 298.75 |
| 1,290 | 298.75 | 298.75 | 298.75 | 298.75 | 298.75 |
| 1,295 | 298.75 | 298.75 | 298.75 | 298.75 | 298.75 |
| 1,300 | 298.75 | 298.75 | 298.75 | 298.75 | 298.75 |
| 1,305 | 298.75 | 298.75 | 298.75 | 298.75 | 298.75 |
| 1,310 | 298.75 | 298.75 | 298.75 | 298.75 | 298.75 |
| 1,315 | 298.75 | 298.75 | 298.75 | 298.75 | 298.75 |
| 1,320 | 298.75 | 298.75 | 298.75 | 298.75 | 298.75 |
| 1,325 | 298.75 | 298.75 | 298.75 | 298.75 | 298.75 |
| 1,330 | 298.75 | 298.75 | 298.75 | 298.75 | 298.75 |
| 1,335 | 298.75 | 298.75 | 298.75 | 298.75 | 298.75 |
| 1,340 | 298.75 | 298.75 | 298.75 | 298.75 | 298.75 |
| 1,345 | 298.75 | 298.75 | 298.75 | 298.75 | 298.75 |
| 1,350 | 298.75 | 298.75 | 298.75 | 298.75 | 298.75 |
| 1,355 | 298.75 | 298.75 | 298.75 | 298.75 | 298.75 |
| 1,360 | 298.75 | 298.75 | 298.75 | 298.75 | 298.75 |
| 1,365 | 298.75 | 298.75 | 298.75 | 298.75 | 298.75 |
| 1,370 | 298.75 | 298.75 | 298.75 | 298.75 | 298.75 |
| 1,375 | 298.75 | 298.75 | 298.75 | 298.75 | 298.75 |
| 1,380 | 298.75 | 298.75 | 298.75 | 298.75 | 298.75 |
| 1,385 | 298.75 | 298.75 | 298.75 | 298.75 | 298.75 |
| 1,390 | 298.75 | 298.75 | 298.75 | 298.75 | 298.75 |
| 1,395 | 298.75 | 298.75 | 298.75 | 298.75 | 298.75 |
| 1,400 | 298.75 | 298.75 | 298.75 | 298.75 | 298.75 |
| 1,405 | 298.75 | 298.75 | 298.75 | 298.75 | 298.75 |
| 1,410 | 298.75 | 298.75 | 298.75 | 298.75 | 298.75 |
| 1,415 | 298.75 | 298.75 | 298.75 | 298.75 | 298.75 |
| 1,420 | 298.75 | 298.75 | 298.75 | 298.75 | 298.75 |
| 1,425 | 298.75 | 298.75 | 298.75 | 298.75 | 298.75 |

# Basin 1B

Subsection: Time vs. Elevation
Label: 1 (OUT)
Scenario: EX10

Return Event: 100 years
Storm Event:

## Time vs. Elevation (ft)

**Output Time increment = 1 min**
**Time on left represents time for first value in each row.**

| Time (min) | Elevation (ft) | Elevation (ft) | Elevation (ft) | Elevation (ft) | Elevation (ft) |
|---|---|---|---|---|---|
| 1,430 | 298.75 | 298.75 | 298.75 | 298.75 | 298.75 |
| 1,435 | 298.75 | 298.75 | 298.75 | 298.75 | 298.75 |
| 1,440 | 298.75 | 298.75 | 298.75 | 298.75 | 298.75 |
| 1,445 | 298.75 | 298.75 | 298.75 | 298.75 | 298.75 |
| 1,450 | 298.75 | 298.75 | 298.75 | 298.75 | 298.75 |
| 1,455 | 298.75 | 298.75 | 298.75 | 298.75 | 298.75 |
| 1,460 | 298.75 | 298.75 | 298.75 | 298.75 | 298.75 |
| 1,465 | 298.75 | 298.75 | 298.75 | 298.75 | 298.75 |
| 1,470 | 298.75 | 298.75 | 298.75 | 298.75 | 298.75 |
| 1,475 | 298.75 | 298.75 | 298.75 | 298.75 | 298.75 |
| 1,480 | 298.75 | 298.75 | 298.75 | 298.75 | 298.75 |
| 1,485 | 298.75 | 298.75 | 298.75 | 298.75 | 298.75 |
| 1,490 | 298.75 | 298.75 | 298.75 | 298.75 | 298.75 |
| 1,495 | 298.75 | 298.75 | 298.75 | 298.75 | 298.75 |
| 1,500 | 298.75 | 298.75 | 298.75 | 298.75 | 298.75 |
| 1,505 | 298.75 | 298.75 | 298.75 | 298.75 | 298.75 |
| 1,510 | 298.75 | 298.75 | 298.75 | 298.75 | 298.75 |
| 1,515 | 298.75 | 298.75 | 298.75 | 298.75 | 298.75 |
| 1,520 | 298.75 | 298.75 | 298.75 | 298.75 | 298.75 |
| 1,525 | 298.75 | 298.75 | 298.75 | 298.75 | 298.75 |
| 1,530 | 298.75 | 298.75 | 298.75 | 298.75 | 298.75 |
| 1,535 | 298.75 | 298.75 | 298.75 | 298.75 | 298.75 |
| 1,540 | 298.75 | 298.75 | 298.75 | 298.75 | 298.75 |
| 1,545 | 298.75 | 298.75 | 298.75 | 298.75 | 298.75 |
| 1,550 | 298.75 | 298.75 | 298.75 | 298.75 | 298.75 |
| 1,555 | 298.75 | 298.75 | 298.75 | 298.75 | 298.75 |
| 1,560 | 298.75 | 298.75 | 298.75 | 298.75 | 298.75 |
| 1,565 | 298.75 | 298.75 | 298.75 | 298.75 | 298.75 |
| 1,570 | 298.75 | 298.75 | 298.75 | 298.75 | 298.75 |
| 1,575 | 298.75 | 298.75 | 298.75 | 298.75 | 298.75 |
| 1,580 | 298.75 | 298.75 | 298.75 | 298.75 | 298.75 |
| 1,585 | 298.75 | 298.75 | 298.75 | 298.75 | 298.75 |
| 1,590 | 298.75 | 298.75 | 298.75 | 298.75 | 298.75 |
| 1,595 | 298.75 | 298.75 | 298.75 | 298.75 | 298.75 |
| 1,600 | 298.75 | 298.75 | 298.75 | 298.75 | 298.75 |
| 1,605 | 298.75 | 298.75 | 298.75 | 298.75 | 298.75 |
| 1,610 | 298.75 | 298.75 | 298.75 | 298.75 | 298.75 |
| 1,615 | 298.75 | 298.75 | 298.75 | 298.75 | 298.75 |
| 1,620 | 298.75 | 298.75 | 298.75 | 298.75 | 298.75 |
| 1,625 | 298.75 | 298.75 | 298.75 | 298.75 | 298.75 |
| 1,630 | 298.75 | 298.75 | 298.75 | 298.75 | 298.75 |

# Basin 1B

Subsection: Time vs. Elevation
Label: 1 (OUT)
Scenario: EX10

Return Event: 100 years
Storm Event:

## Time vs. Elevation (ft)

**Output Time increment = 1 min**
**Time on left represents time for first value in each row.**

| Time (min) | Elevation (ft) | Elevation (ft) | Elevation (ft) | Elevation (ft) | Elevation (ft) |
|---|---|---|---|---|---|
| 1,635 | 298.75 | 298.75 | 298.75 | 298.75 | 298.75 |
| 1,640 | 298.75 | 298.75 | 298.75 | 298.75 | 298.75 |
| 1,645 | 298.75 | 298.75 | 298.75 | 298.75 | 298.75 |
| 1,650 | 298.75 | 298.75 | 298.75 | 298.75 | 298.75 |
| 1,655 | 298.75 | 298.75 | 298.75 | 298.75 | 298.75 |
| 1,660 | 298.75 | 298.75 | 298.75 | 298.75 | 298.75 |
| 1,665 | 298.75 | 298.75 | 298.75 | 298.75 | 298.75 |
| 1,670 | 298.75 | 298.75 | 298.75 | 298.75 | 298.75 |
| 1,675 | 298.75 | 298.75 | 298.75 | 298.75 | 298.75 |
| 1,680 | 298.75 | 298.75 | 298.75 | 298.75 | 298.75 |
| 1,685 | 298.75 | 298.75 | 298.75 | 298.75 | 298.75 |
| 1,690 | 298.75 | 298.75 | 298.75 | 298.75 | 298.75 |
| 1,695 | 298.75 | 298.75 | 298.75 | 298.75 | 298.75 |
| 1,700 | 298.75 | 298.75 | 298.75 | 298.75 | 298.75 |
| 1,705 | 298.75 | 298.75 | 298.75 | 298.75 | 298.75 |
| 1,710 | 298.75 | 298.75 | 298.75 | 298.75 | 298.75 |
| 1,715 | 298.75 | 298.75 | 298.75 | 298.75 | 298.75 |
| 1,720 | 298.75 | 298.75 | 298.75 | 298.75 | 298.75 |
| 1,725 | 298.75 | 298.75 | 298.75 | 298.75 | 298.75 |
| 1,730 | 298.75 | 298.75 | 298.75 | 298.75 | 298.75 |
| 1,735 | 298.75 | 298.75 | 298.75 | 298.75 | 298.75 |
| 1,740 | 298.75 | 298.75 | 298.75 | 298.75 | 298.75 |
| 1,745 | 298.75 | 298.75 | 298.75 | 298.75 | 298.75 |
| 1,750 | 298.75 | 298.75 | 298.75 | 298.75 | 298.75 |
| 1,755 | 298.75 | 298.75 | 298.75 | 298.75 | 298.75 |
| 1,760 | 298.75 | 298.75 | 298.75 | 298.75 | 298.75 |
| 1,765 | 298.75 | 298.75 | 298.75 | 298.75 | 298.75 |
| 1,770 | 298.75 | 298.75 | 298.75 | 298.75 | 298.75 |
| 1,775 | 298.75 | 298.75 | 298.75 | 298.75 | 298.75 |
| 1,780 | 298.75 | 298.75 | 298.75 | 298.75 | 298.75 |
| 1,785 | 298.75 | 298.75 | 298.75 | 298.75 | 298.75 |
| 1,790 | 298.75 | 298.75 | 298.75 | 298.75 | 298.75 |
| 1,795 | 298.75 | 298.75 | 298.75 | 298.75 | 298.75 |
| 1,800 | 298.75 | 298.75 | 298.75 | 298.75 | 298.75 |
| 1,805 | 298.75 | 298.75 | 298.75 | 298.75 | 298.75 |
| 1,810 | 298.75 | 298.75 | 298.75 | 298.75 | 298.75 |
| 1,815 | 298.75 | 298.75 | 298.75 | 298.75 | 298.75 |
| 1,820 | 298.75 | 298.75 | 298.75 | 298.75 | 298.75 |
| 1,825 | 298.75 | 298.75 | 298.75 | 298.75 | 298.75 |
| 1,830 | 298.75 | 298.75 | 298.75 | 298.75 | 298.75 |
| 1,835 | 298.75 | 298.75 | 298.75 | 298.75 | 298.75 |

# Basin 1B

Subsection: Time vs. Elevation
Label: 1 (OUT)
Scenario: EX10

Return Event: 100 years
Storm Event:

**Time vs. Elevation (ft)**

**Output Time increment = 1 min**
**Time on left represents time for first value in each row.**

| Time (min) | Elevation (ft) | Elevation (ft) | Elevation (ft) | Elevation (ft) | Elevation (ft) |
|---|---|---|---|---|---|
| 1,840 | 298.75 | 298.75 | 298.75 | 298.75 | 298.75 |
| 1,845 | 298.75 | 298.75 | 298.75 | 298.75 | 298.75 |
| 1,850 | 298.75 | 298.75 | 298.75 | 298.75 | 298.75 |
| 1,855 | 298.75 | 298.75 | 298.75 | 298.75 | 298.75 |
| 1,860 | 298.75 | 298.75 | 298.75 | 298.75 | 298.75 |
| 1,865 | 298.75 | 298.75 | 298.75 | 298.75 | 298.75 |
| 1,870 | 298.75 | 298.75 | 298.75 | 298.75 | 298.75 |
| 1,875 | 298.75 | 298.75 | 298.75 | 298.75 | 298.75 |
| 1,880 | 298.75 | 298.75 | 298.75 | 298.75 | 298.75 |
| 1,885 | 298.75 | 298.75 | 298.75 | 298.75 | 298.75 |
| 1,890 | 298.75 | 298.75 | 298.75 | 298.75 | 298.75 |
| 1,895 | 298.75 | 298.75 | 298.75 | 298.75 | 298.75 |
| 1,900 | 298.75 | 298.75 | 298.75 | 298.75 | 298.75 |
| 1,905 | 298.75 | 298.75 | 298.75 | 298.75 | 298.75 |
| 1,910 | 298.75 | 298.75 | 298.75 | 298.75 | 298.75 |
| 1,915 | 298.75 | 298.75 | 298.75 | 298.75 | 298.75 |
| 1,920 | 298.75 | 298.75 | 298.75 | 298.75 | 298.75 |
| 1,925 | 298.75 | 298.75 | 298.75 | 298.75 | 298.75 |
| 1,930 | 298.75 | 298.75 | 298.75 | 298.75 | 298.75 |
| 1,935 | 298.75 | 298.75 | 298.75 | 298.75 | 298.75 |
| 1,940 | 298.75 | 298.75 | 298.75 | 298.75 | 298.75 |
| 1,945 | 298.75 | 298.75 | 298.75 | 298.75 | 298.75 |
| 1,950 | 298.75 | 298.75 | 298.75 | 298.75 | 298.75 |
| 1,955 | 298.75 | 298.75 | 298.75 | 298.75 | 298.75 |
| 1,960 | 298.75 | 298.75 | 298.75 | 298.75 | 298.75 |
| 1,965 | 298.75 | 298.75 | 298.75 | 298.75 | 298.75 |
| 1,970 | 298.75 | 298.75 | 298.75 | 298.75 | 298.75 |
| 1,975 | 298.75 | 298.75 | 298.75 | 298.75 | 298.75 |
| 1,980 | 298.75 | 298.75 | 298.75 | 298.75 | 298.75 |
| 1,985 | 298.75 | 298.75 | 298.75 | 298.75 | 298.75 |
| 1,990 | 298.75 | 298.75 | 298.75 | 298.75 | 298.75 |
| 1,995 | 298.75 | 298.75 | 298.75 | 298.75 | 298.75 |
| 2,000 | 298.75 | (N/A) | (N/A) | (N/A) | (N/A) |

# Basin 1B

Subsection: Outlet Input Data
Label: Outlet#1
Scenario: EX10

Return Event: 100 years
Storm Event:

| Requested Pond Water Surface Elevations | |
|---|---|
| Minimum (Headwater) | 298.50 ft |
| Increment (Headwater) | 0.10 ft |
| Maximum (Headwater) | 304.50 ft |

## Outlet Connectivity

| Structure Type | Outlet ID | Direction | Outfall | E1 (ft) | E2 (ft) |
|---|---|---|---|---|---|
| Orifice-Circular | Orifice - LF | Forward | TW | 302.75 | 304.50 |
| Inlet Box | Riser - 1 | Forward | TW | 303.00 | 304.50 |
| Orifice-Circular | Orifice - Underdrain | Forward | TW | 298.75 | 304.50 |
| Tailwater Settings | Tailwater | | | (N/A) | (N/A) |

# Basin 1B

Subsection: Outlet Input Data
Label: Outlet#1
Scenario: EX10

Return Event: 100 years
Storm Event:

| Structure ID: Orifice - LF<br>Structure Type: Orifice-Circular | |
|---|---|
| Number of Openings | 1 |
| Elevation | 302.75 ft |
| Orifice Diameter | 2.0 in |
| Orifice Coefficient | 0.600 |

| Structure ID: Riser - 1<br>Structure Type: Inlet Box | |
|---|---|
| Number of Openings | 1 |
| Elevation | 303.00 ft |
| Orifice Area | 14.1 ft² |
| Orifice Coefficient | 0.600 |
| Weir Length | 15.60 ft |
| Weir Coefficient | 3.00 (ft^0.5)/s |
| K Reverse | 1.000 |
| Manning's n | 0.000 |
| Kev, Charged Riser | 0.000 |
| Weir Submergence | False |
| Orifice H to crest | True |

| Structure ID: Orifice - Underdrain<br>Structure Type: Orifice-Circular | |
|---|---|
| Number of Openings | 1 |
| Elevation | 298.75 ft |
| Orifice Diameter | 1.5 in |
| Orifice Coefficient | 0.600 |

| Structure ID: TW<br>Structure Type: TW Setup, DS Channel | |
|---|---|
| Tailwater Type | Free Outfall |

| Convergence Tolerances | |
|---|---|
| Maximum Iterations | 80 |
| Tailwater Tolerance (Minimum) | 0.01 ft |
| Tailwater Tolerance (Maximum) | 0.10 ft |
| Headwater Tolerance (Minimum) | 0.01 ft |
| Headwater Tolerance (Maximum) | 0.10 ft |
| Flow Tolerance (Minimum) | 0.001 ft³/s |

# Basin 1B

Subsection: Outlet Input Data
Label: Outlet#1
Scenario: EX10

Return Event: 100 years
Storm Event:

| Convergence Tolerances | |
|---|---|
| Flow Tolerance (Maximum) | 10.000 ft³/s |

# Basin 1B

Subsection: Elevation-Volume-Flow Table (Pond)
Label: 1
Scenario: EX10

Return Event: 100 years
Storm Event:

| Infiltration | |
|---|---|
| Infiltration Method (Computed) | No Infiltration |

| Initial Conditions | |
|---|---|
| Elevation (Water Surface, Initial) | 304.50 ft |
| Volume (Initial) | 0.272 ac-ft |
| Flow (Initial Outlet) | 83.39 ft³/s |
| Flow (Initial Infiltration) | 0.00 ft³/s |
| Flow (Initial, Total) | 83.39 ft³/s |
| Time Increment | 1 min |

| Elevation (ft) | Outflow (ft³/s) | Storage (ac-ft) | Area (ft²) | Infiltration (ft³/s) | Flow (Total) (ft³/s) | 2S/t + O (ft³/s) |
|---|---|---|---|---|---|---|
| 298.50 | 0.00 | 0.000 | 10.000 | 0.00 | 0.00 | 0.00 |
| 298.60 | 0.00 | 0.000 | 10.000 | 0.00 | 0.00 | 0.03 |
| 298.70 | 0.00 | 0.000 | 10.000 | 0.00 | 0.00 | 0.07 |
| 298.75 | 0.00 | 0.000 | 10.000 | 0.00 | 0.00 | 0.08 |
| 298.80 | 0.00 | 0.000 | 10.000 | 0.00 | 0.00 | 0.10 |
| 298.90 | 0.02 | 0.000 | 10.000 | 0.00 | 0.02 | 0.15 |
| 299.00 | 0.03 | 0.000 | 10.000 | 0.00 | 0.03 | 0.19 |
| 299.10 | 0.03 | 0.000 | 10.000 | 0.00 | 0.03 | 0.23 |
| 299.20 | 0.04 | 0.000 | 10.000 | 0.00 | 0.04 | 0.27 |
| 299.30 | 0.04 | 0.000 | 10.000 | 0.00 | 0.04 | 0.31 |
| 299.40 | 0.05 | 0.000 | 10.000 | 0.00 | 0.05 | 0.35 |
| 299.50 | 0.05 | 0.000 | 10.000 | 0.00 | 0.05 | 0.38 |
| 299.60 | 0.05 | 0.000 | 10.000 | 0.00 | 0.05 | 0.42 |
| 299.70 | 0.06 | 0.000 | 10.000 | 0.00 | 0.06 | 0.46 |
| 299.80 | 0.06 | 0.000 | 10.000 | 0.00 | 0.06 | 0.49 |
| 299.90 | 0.06 | 0.000 | 10.000 | 0.00 | 0.06 | 0.53 |
| 300.00 | 0.06 | 0.000 | 10.000 | 0.00 | 0.06 | 0.56 |
| 300.10 | 0.07 | 0.000 | 10.000 | 0.00 | 0.07 | 0.60 |
| 300.20 | 0.07 | 0.000 | 10.000 | 0.00 | 0.07 | 0.64 |
| 300.30 | 0.07 | 0.000 | 10.000 | 0.00 | 0.07 | 0.67 |
| 300.40 | 0.07 | 0.000 | 10.000 | 0.00 | 0.07 | 0.71 |
| 300.50 | 0.08 | 0.000 | 10.000 | 0.00 | 0.08 | 0.74 |
| 300.60 | 0.08 | 0.000 | 10.000 | 0.00 | 0.08 | 0.78 |
| 300.70 | 0.08 | 0.001 | 10.000 | 0.00 | 0.08 | 0.81 |
| 300.80 | 0.08 | 0.001 | 10.000 | 0.00 | 0.08 | 0.85 |
| 300.90 | 0.09 | 0.001 | 10.000 | 0.00 | 0.09 | 0.89 |
| 301.00 | 0.09 | 0.001 | 10.000 | 0.00 | 0.09 | 0.92 |
| 301.10 | 0.09 | 0.001 | 10.000 | 0.00 | 0.09 | 0.96 |
| 301.20 | 0.09 | 0.001 | 10.000 | 0.00 | 0.09 | 0.99 |

# Basin 1B

Subsection: Elevation-Volume-Flow Table (Pond) Return Event: 100 years
Label: 1 Storm Event:
Scenario: EX10

| Elevation (ft) | Outflow (ft³/s) | Storage (ac-ft) | Area (ft²) | Infiltration (ft³/s) | Flow (Total) (ft³/s) | 2S/t + O (ft³/s) |
|---|---|---|---|---|---|---|
| 301.30 | 0.09 | 0.001 | 10.000 | 0.00 | 0.09 | 1.03 |
| 301.40 | 0.10 | 0.001 | 10.000 | 0.00 | 0.10 | 1.06 |
| 301.50 | 0.10 | 0.001 | 2,615.000 | 0.00 | 0.10 | 1.40 |
| 301.60 | 0.10 | 0.007 | 2,692.070 | 0.00 | 0.10 | 10.25 |
| 301.70 | 0.10 | 0.013 | 2,770.260 | 0.00 | 0.10 | 19.36 |
| 301.80 | 0.10 | 0.020 | 2,849.569 | 0.00 | 0.10 | 28.72 |
| 301.90 | 0.10 | 0.026 | 2,929.997 | 0.00 | 0.10 | 38.36 |
| 302.00 | 0.11 | 0.033 | 3,011.544 | 0.00 | 0.11 | 48.26 |
| 302.10 | 0.11 | 0.040 | 3,094.211 | 0.00 | 0.11 | 58.44 |
| 302.20 | 0.11 | 0.047 | 3,177.997 | 0.00 | 0.11 | 68.89 |
| 302.30 | 0.11 | 0.055 | 3,262.903 | 0.00 | 0.11 | 79.63 |
| 302.40 | 0.11 | 0.062 | 3,348.927 | 0.00 | 0.11 | 90.65 |
| 302.50 | 0.11 | 0.070 | 3,436.071 | 0.00 | 0.11 | 101.96 |
| 302.60 | 0.11 | 0.078 | 3,524.334 | 0.00 | 0.11 | 113.56 |
| 302.70 | 0.12 | 0.086 | 3,613.717 | 0.00 | 0.12 | 125.46 |
| 302.75 | 0.12 | 0.090 | 3,658.828 | 0.00 | 0.12 | 131.52 |
| 302.80 | 0.12 | 0.095 | 3,704.219 | 0.00 | 0.12 | 137.66 |
| 302.90 | 0.14 | 0.103 | 3,795.840 | 0.00 | 0.14 | 150.18 |
| 303.00 | 0.16 | 0.112 | 3,888.580 | 0.00 | 0.16 | 163.01 |
| 303.10 | 1.66 | 0.121 | 3,982.440 | 0.00 | 1.66 | 177.62 |
| 303.20 | 4.37 | 0.130 | 4,077.419 | 0.00 | 4.37 | 193.77 |
| 303.30 | 7.89 | 0.140 | 4,173.517 | 0.00 | 7.89 | 211.04 |
| 303.40 | 12.05 | 0.150 | 4,270.734 | 0.00 | 12.05 | 229.27 |
| 303.50 | 16.76 | 0.160 | 4,369.071 | 0.00 | 16.76 | 248.38 |
| 303.60 | 21.97 | 0.170 | 4,468.527 | 0.00 | 21.97 | 268.32 |
| 303.70 | 27.64 | 0.180 | 4,569.103 | 0.00 | 27.64 | 289.05 |
| 303.80 | 33.72 | 0.191 | 4,670.797 | 0.00 | 33.72 | 310.53 |
| 303.90 | 40.20 | 0.201 | 4,773.611 | 0.00 | 40.20 | 332.75 |
| 304.00 | 47.05 | 0.213 | 4,877.544 | 0.00 | 47.05 | 355.69 |
| 304.10 | 54.25 | 0.224 | 4,982.597 | 0.00 | 54.25 | 379.32 |
| 304.20 | 61.78 | 0.235 | 5,088.769 | 0.00 | 61.78 | 403.64 |
| 304.30 | 69.63 | 0.247 | 5,196.060 | 0.00 | 69.63 | 428.63 |
| 304.40 | 77.80 | 0.259 | 5,304.470 | 0.00 | 77.80 | 454.29 |
| 304.50 | 83.39 | 0.272 | 5,414.000 | 0.00 | 83.39 | 477.75 |

# Basin 1B

## Index

1

1 (Elevation-Volume-Flow Table (Pond))...

1 (Elevation-Volume-Flow Table (Pond), 100 years (EX10))...14, 15

1 (OUT) (Time vs. Elevation)...

1 (OUT) (Time vs. Elevation, 100 years (EX10))...1, 2, 3, 4, 5, 6, 7, 8, 9, 10

O

Outlet#1 (Outlet Input Data)...

Outlet#1 (Outlet Input Data, 100 years (EX10))...11, 12, 13

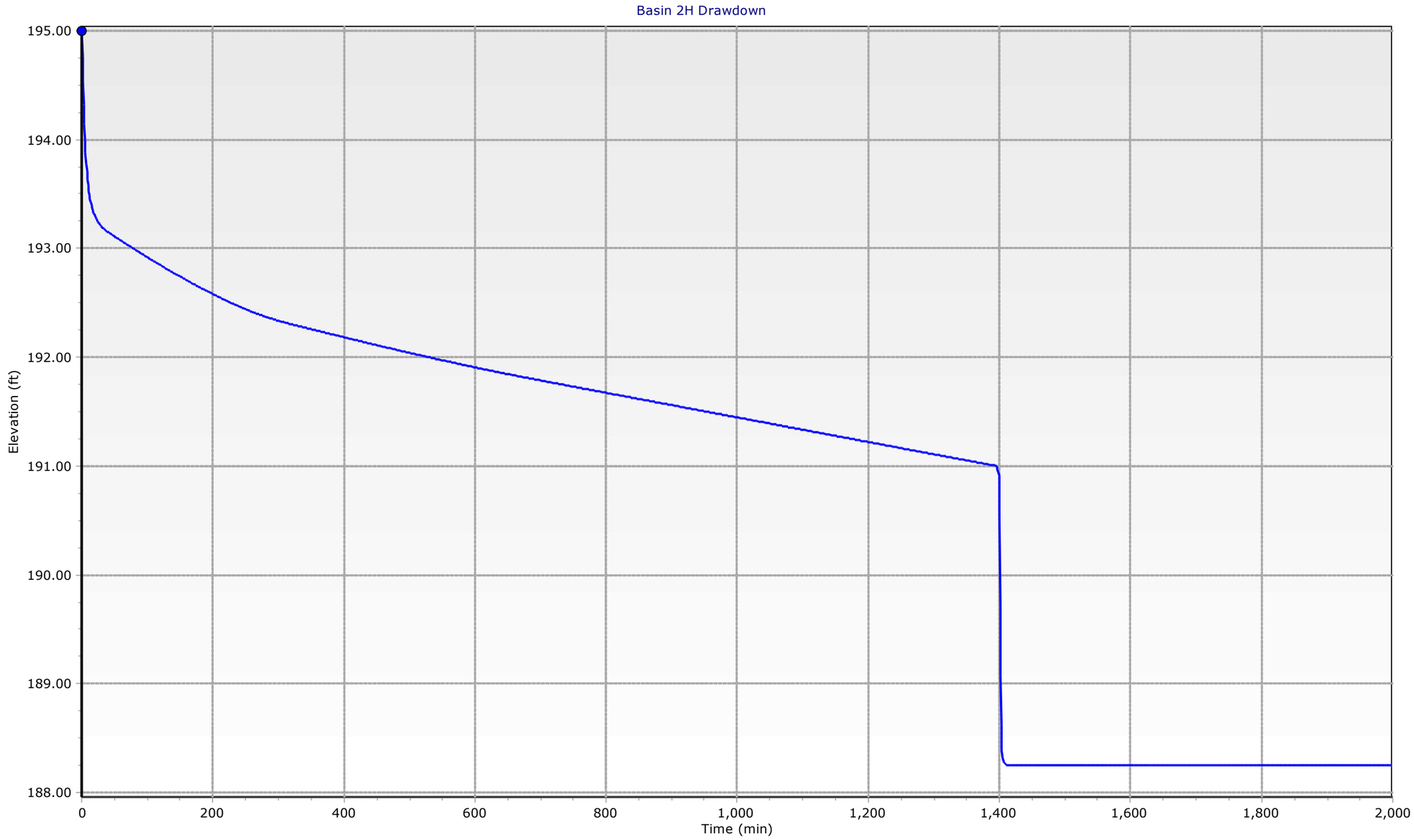
Basin 2H Drawdown
195.00
194.00
193.00
192.00
191.00
190.00
189.00
188.00
Elevation (ft)
0
200
400
600
800
1,000
1,200
1,400
1,600
1,800
2,000
Time (min)
1 - Drawdown - Elevation

# Table of Contents


| | | |
|---|---|---|
| 1 (OUT) | Time vs. Elevation | 1 |
| Outlet#1 w Underdrain | Outlet Input Data | 11 |
| 1 | Elevation-Volume-Flow Table (Pond) | 14 |

# Basin 2H Drawdown

Subsection: Time vs. Elevation
Label: 1 (OUT)
Scenario: Drawdown

Return Event: 100 years
Storm Event:

**Time vs. Elevation (ft)**

**Output Time increment = 1 min**
**Time on left represents time for first value in each row.**

| Time (min) | Elevation (ft) | Elevation (ft) | Elevation (ft) | Elevation (ft) | Elevation (ft) |
|---|---|---|---|---|---|
| 0 | 195.00 | 194.54 | 194.14 | 193.83 | 193.60 |
| 5 | 193.41 | 193.26 | 193.13 | 193.01 | 192.89 |
| 10 | 192.77 | 192.66 | 192.55 | 192.45 | 192.35 |
| 15 | 192.26 | 192.18 | 192.11 | 192.05 | 192.00 |
| 20 | 191.95 | 191.92 | 191.89 | 191.86 | 191.84 |
| 25 | 191.82 | 191.81 | 191.80 | 191.79 | 191.78 |
| 30 | 191.77 | 191.77 | 191.76 | 191.76 | 191.76 |
| 35 | 191.75 | 191.75 | 191.75 | 191.75 | 191.75 |
| 40 | 191.74 | 191.74 | 191.74 | 191.74 | 191.74 |
| 45 | 191.74 | 191.73 | 191.73 | 191.73 | 191.73 |
| 50 | 191.73 | 191.73 | 191.72 | 191.72 | 191.72 |
| 55 | 191.72 | 191.72 | 191.72 | 191.71 | 191.71 |
| 60 | 191.71 | 191.71 | 191.71 | 191.71 | 191.70 |
| 65 | 191.70 | 191.70 | 191.70 | 191.70 | 191.69 |
| 70 | 191.69 | 191.69 | 191.69 | 191.69 | 191.69 |
| 75 | 191.68 | 191.68 | 191.68 | 191.68 | 191.68 |
| 80 | 191.68 | 191.67 | 191.67 | 191.67 | 191.67 |
| 85 | 191.67 | 191.67 | 191.66 | 191.66 | 191.66 |
| 90 | 191.66 | 191.66 | 191.66 | 191.65 | 191.65 |
| 95 | 191.65 | 191.65 | 191.65 | 191.65 | 191.64 |
| 100 | 191.64 | 191.64 | 191.64 | 191.64 | 191.64 |
| 105 | 191.63 | 191.63 | 191.63 | 191.63 | 191.63 |
| 110 | 191.62 | 191.62 | 191.62 | 191.62 | 191.62 |
| 115 | 191.62 | 191.61 | 191.61 | 191.61 | 191.61 |
| 120 | 191.61 | 191.61 | 191.60 | 191.60 | 191.60 |
| 125 | 191.60 | 191.60 | 191.60 | 191.59 | 191.59 |
| 130 | 191.59 | 191.59 | 191.59 | 191.59 | 191.58 |
| 135 | 191.58 | 191.58 | 191.58 | 191.58 | 191.58 |
| 140 | 191.57 | 191.57 | 191.57 | 191.57 | 191.57 |
| 145 | 191.57 | 191.56 | 191.56 | 191.56 | 191.56 |
| 150 | 191.56 | 191.55 | 191.55 | 191.55 | 191.55 |
| 155 | 191.55 | 191.55 | 191.54 | 191.54 | 191.54 |
| 160 | 191.54 | 191.54 | 191.54 | 191.53 | 191.53 |
| 165 | 191.53 | 191.53 | 191.53 | 191.53 | 191.52 |
| 170 | 191.52 | 191.52 | 191.52 | 191.52 | 191.52 |
| 175 | 191.51 | 191.51 | 191.51 | 191.51 | 191.51 |
| 180 | 191.51 | 191.50 | 191.50 | 191.50 | 191.50 |
| 185 | 191.50 | 191.50 | 191.49 | 191.49 | 191.49 |
| 190 | 191.49 | 191.49 | 191.48 | 191.48 | 191.48 |
| 195 | 191.48 | 191.48 | 191.48 | 191.47 | 191.47 |

# Basin 2H Drawdown

Subsection: Time vs. Elevation
Label: 1 (OUT)
Scenario: Drawdown

Return Event: 100 years
Storm Event:

**Time vs. Elevation (ft)**

**Output Time increment = 1 min**
**Time on left represents time for first value in each row.**

| Time (min) | Elevation (ft) | Elevation (ft) | Elevation (ft) | Elevation (ft) | Elevation (ft) |
|---|---|---|---|---|---|
| 200 | 191.47 | 191.47 | 191.47 | 191.47 | 191.46 |
| 205 | 191.46 | 191.46 | 191.46 | 191.46 | 191.46 |
| 210 | 191.45 | 191.45 | 191.45 | 191.45 | 191.45 |
| 215 | 191.45 | 191.44 | 191.44 | 191.44 | 191.44 |
| 220 | 191.44 | 191.44 | 191.43 | 191.43 | 191.43 |
| 225 | 191.43 | 191.43 | 191.42 | 191.42 | 191.42 |
| 230 | 191.42 | 191.42 | 191.42 | 191.41 | 191.41 |
| 235 | 191.41 | 191.41 | 191.41 | 191.41 | 191.40 |
| 240 | 191.40 | 191.40 | 191.40 | 191.40 | 191.40 |
| 245 | 191.39 | 191.39 | 191.39 | 191.39 | 191.39 |
| 250 | 191.39 | 191.38 | 191.38 | 191.38 | 191.38 |
| 255 | 191.38 | 191.38 | 191.37 | 191.37 | 191.37 |
| 260 | 191.37 | 191.37 | 191.36 | 191.36 | 191.36 |
| 265 | 191.36 | 191.36 | 191.36 | 191.35 | 191.35 |
| 270 | 191.35 | 191.35 | 191.35 | 191.35 | 191.34 |
| 275 | 191.34 | 191.34 | 191.34 | 191.34 | 191.34 |
| 280 | 191.33 | 191.33 | 191.33 | 191.33 | 191.33 |
| 285 | 191.33 | 191.32 | 191.32 | 191.32 | 191.32 |
| 290 | 191.32 | 191.32 | 191.31 | 191.31 | 191.31 |
| 295 | 191.31 | 191.31 | 191.30 | 191.30 | 191.30 |
| 300 | 191.30 | 191.30 | 191.30 | 191.29 | 191.29 |
| 305 | 191.29 | 191.29 | 191.29 | 191.29 | 191.28 |
| 310 | 191.28 | 191.28 | 191.28 | 191.28 | 191.28 |
| 315 | 191.27 | 191.27 | 191.27 | 191.27 | 191.27 |
| 320 | 191.27 | 191.26 | 191.26 | 191.26 | 191.26 |
| 325 | 191.26 | 191.25 | 191.25 | 191.25 | 191.25 |
| 330 | 191.25 | 191.25 | 191.24 | 191.24 | 191.24 |
| 335 | 191.24 | 191.24 | 191.24 | 191.23 | 191.23 |
| 340 | 191.23 | 191.23 | 191.23 | 191.23 | 191.22 |
| 345 | 191.22 | 191.22 | 191.22 | 191.22 | 191.22 |
| 350 | 191.21 | 191.21 | 191.21 | 191.21 | 191.21 |
| 355 | 191.21 | 191.20 | 191.20 | 191.20 | 191.20 |
| 360 | 191.20 | 191.19 | 191.19 | 191.19 | 191.19 |
| 365 | 191.19 | 191.19 | 191.18 | 191.18 | 191.18 |
| 370 | 191.18 | 191.18 | 191.18 | 191.17 | 191.17 |
| 375 | 191.17 | 191.17 | 191.17 | 191.17 | 191.16 |
| 380 | 191.16 | 191.16 | 191.16 | 191.16 | 191.16 |
| 385 | 191.15 | 191.15 | 191.15 | 191.15 | 191.15 |
| 390 | 191.14 | 191.14 | 191.14 | 191.14 | 191.14 |
| 395 | 191.14 | 191.13 | 191.13 | 191.13 | 191.13 |
| 400 | 191.13 | 191.13 | 191.12 | 191.12 | 191.12 |

# Basin 2H Drawdown

Subsection: Time vs. Elevation
Label: 1 (OUT)
Scenario: Drawdown

Return Event: 100 years
Storm Event:

**Time vs. Elevation (ft)**

**Output Time increment = 1 min**
**Time on left represents time for first value in each row.**

| Time (min) | Elevation (ft) | Elevation (ft) | Elevation (ft) | Elevation (ft) | Elevation (ft) |
|---|---|---|---|---|---|
| 405 | 191.12 | 191.12 | 191.12 | 191.11 | 191.11 |
| 410 | 191.11 | 191.11 | 191.11 | 191.11 | 191.10 |
| 415 | 191.10 | 191.10 | 191.10 | 191.10 | 191.10 |
| 420 | 191.09 | 191.09 | 191.09 | 191.09 | 191.09 |
| 425 | 191.08 | 191.08 | 191.08 | 191.08 | 191.08 |
| 430 | 191.08 | 191.07 | 191.07 | 191.07 | 191.07 |
| 435 | 191.07 | 191.07 | 191.06 | 191.06 | 191.06 |
| 440 | 191.06 | 191.06 | 191.06 | 191.05 | 191.05 |
| 445 | 191.05 | 191.05 | 191.05 | 191.05 | 191.04 |
| 450 | 191.04 | 191.04 | 191.04 | 191.04 | 191.03 |
| 455 | 191.03 | 191.03 | 191.03 | 191.03 | 191.03 |
| 460 | 191.02 | 191.02 | 191.02 | 191.02 | 191.02 |
| 465 | 191.02 | 191.01 | 191.01 | 191.01 | 191.01 |
| 470 | 191.01 | 191.01 | 191.00 | 191.00 | 191.00 |
| 475 | 190.97 | 190.92 | 190.41 | 189.60 | 188.99 |
| 480 | 188.58 | 188.37 | 188.30 | 188.29 | 188.27 |
| 485 | 188.27 | 188.26 | 188.26 | 188.26 | 188.25 |
| 490 | 188.25 | 188.25 | 188.25 | 188.25 | 188.25 |
| 495 | 188.25 | 188.25 | 188.25 | 188.25 | 188.25 |
| 500 | 188.25 | 188.25 | 188.25 | 188.25 | 188.25 |
| 505 | 188.25 | 188.25 | 188.25 | 188.25 | 188.25 |
| 510 | 188.25 | 188.25 | 188.25 | 188.25 | 188.25 |
| 515 | 188.25 | 188.25 | 188.25 | 188.25 | 188.25 |
| 520 | 188.25 | 188.25 | 188.25 | 188.25 | 188.25 |
| 525 | 188.25 | 188.25 | 188.25 | 188.25 | 188.25 |
| 530 | 188.25 | 188.25 | 188.25 | 188.25 | 188.25 |
| 535 | 188.25 | 188.25 | 188.25 | 188.25 | 188.25 |
| 540 | 188.25 | 188.25 | 188.25 | 188.25 | 188.25 |
| 545 | 188.25 | 188.25 | 188.25 | 188.25 | 188.25 |
| 550 | 188.25 | 188.25 | 188.25 | 188.25 | 188.25 |
| 555 | 188.25 | 188.25 | 188.25 | 188.25 | 188.25 |
| 560 | 188.25 | 188.25 | 188.25 | 188.25 | 188.25 |
| 565 | 188.25 | 188.25 | 188.25 | 188.25 | 188.25 |
| 570 | 188.25 | 188.25 | 188.25 | 188.25 | 188.25 |
| 575 | 188.25 | 188.25 | 188.25 | 188.25 | 188.25 |
| 580 | 188.25 | 188.25 | 188.25 | 188.25 | 188.25 |
| 585 | 188.25 | 188.25 | 188.25 | 188.25 | 188.25 |
| 590 | 188.25 | 188.25 | 188.25 | 188.25 | 188.25 |
| 595 | 188.25 | 188.25 | 188.25 | 188.25 | 188.25 |
| 600 | 188.25 | 188.25 | 188.25 | 188.25 | 188.25 |
| 605 | 188.25 | 188.25 | 188.25 | 188.25 | 188.25 |

# Basin 2H Drawdown

Subsection: Time vs. Elevation
Label: 1 (OUT)
Scenario: Drawdown

Return Event: 100 years
Storm Event:

**Time vs. Elevation (ft)**

**Output Time increment = 1 min**
**Time on left represents time for first value in each row.**

| Time (min) | Elevation (ft) | Elevation (ft) | Elevation (ft) | Elevation (ft) | Elevation (ft) |
|---|---|---|---|---|---|
| 610 | 188.25 | 188.25 | 188.25 | 188.25 | 188.25 |
| 615 | 188.25 | 188.25 | 188.25 | 188.25 | 188.25 |
| 620 | 188.25 | 188.25 | 188.25 | 188.25 | 188.25 |
| 625 | 188.25 | 188.25 | 188.25 | 188.25 | 188.25 |
| 630 | 188.25 | 188.25 | 188.25 | 188.25 | 188.25 |
| 635 | 188.25 | 188.25 | 188.25 | 188.25 | 188.25 |
| 640 | 188.25 | 188.25 | 188.25 | 188.25 | 188.25 |
| 645 | 188.25 | 188.25 | 188.25 | 188.25 | 188.25 |
| 650 | 188.25 | 188.25 | 188.25 | 188.25 | 188.25 |
| 655 | 188.25 | 188.25 | 188.25 | 188.25 | 188.25 |
| 660 | 188.25 | 188.25 | 188.25 | 188.25 | 188.25 |
| 665 | 188.25 | 188.25 | 188.25 | 188.25 | 188.25 |
| 670 | 188.25 | 188.25 | 188.25 | 188.25 | 188.25 |
| 675 | 188.25 | 188.25 | 188.25 | 188.25 | 188.25 |
| 680 | 188.25 | 188.25 | 188.25 | 188.25 | 188.25 |
| 685 | 188.25 | 188.25 | 188.25 | 188.25 | 188.25 |
| 690 | 188.25 | 188.25 | 188.25 | 188.25 | 188.25 |
| 695 | 188.25 | 188.25 | 188.25 | 188.25 | 188.25 |
| 700 | 188.25 | 188.25 | 188.25 | 188.25 | 188.25 |
| 705 | 188.25 | 188.25 | 188.25 | 188.25 | 188.25 |
| 710 | 188.25 | 188.25 | 188.25 | 188.25 | 188.25 |
| 715 | 188.25 | 188.25 | 188.25 | 188.25 | 188.25 |
| 720 | 188.25 | 188.25 | 188.25 | 188.25 | 188.25 |
| 725 | 188.25 | 188.25 | 188.25 | 188.25 | 188.25 |
| 730 | 188.25 | 188.25 | 188.25 | 188.25 | 188.25 |
| 735 | 188.25 | 188.25 | 188.25 | 188.25 | 188.25 |
| 740 | 188.25 | 188.25 | 188.25 | 188.25 | 188.25 |
| 745 | 188.25 | 188.25 | 188.25 | 188.25 | 188.25 |
| 750 | 188.25 | 188.25 | 188.25 | 188.25 | 188.25 |
| 755 | 188.25 | 188.25 | 188.25 | 188.25 | 188.25 |
| 760 | 188.25 | 188.25 | 188.25 | 188.25 | 188.25 |
| 765 | 188.25 | 188.25 | 188.25 | 188.25 | 188.25 |
| 770 | 188.25 | 188.25 | 188.25 | 188.25 | 188.25 |
| 775 | 188.25 | 188.25 | 188.25 | 188.25 | 188.25 |
| 780 | 188.25 | 188.25 | 188.25 | 188.25 | 188.25 |
| 785 | 188.25 | 188.25 | 188.25 | 188.25 | 188.25 |
| 790 | 188.25 | 188.25 | 188.25 | 188.25 | 188.25 |
| 795 | 188.25 | 188.25 | 188.25 | 188.25 | 188.25 |
| 800 | 188.25 | 188.25 | 188.25 | 188.25 | 188.25 |
| 805 | 188.25 | 188.25 | 188.25 | 188.25 | 188.25 |
| 810 | 188.25 | 188.25 | 188.25 | 188.25 | 188.25 |

# Basin 2H Drawdown

Subsection: Time vs. Elevation
Label: 1 (OUT)
Scenario: Drawdown

Return Event: 100 years
Storm Event:

**Time vs. Elevation (ft)**

**Output Time increment = 1 min**
**Time on left represents time for first value in each row.**

| Time (min) | Elevation (ft) | Elevation (ft) | Elevation (ft) | Elevation (ft) | Elevation (ft) |
|---|---|---|---|---|---|
| 815 | 188.25 | 188.25 | 188.25 | 188.25 | 188.25 |
| 820 | 188.25 | 188.25 | 188.25 | 188.25 | 188.25 |
| 825 | 188.25 | 188.25 | 188.25 | 188.25 | 188.25 |
| 830 | 188.25 | 188.25 | 188.25 | 188.25 | 188.25 |
| 835 | 188.25 | 188.25 | 188.25 | 188.25 | 188.25 |
| 840 | 188.25 | 188.25 | 188.25 | 188.25 | 188.25 |
| 845 | 188.25 | 188.25 | 188.25 | 188.25 | 188.25 |
| 850 | 188.25 | 188.25 | 188.25 | 188.25 | 188.25 |
| 855 | 188.25 | 188.25 | 188.25 | 188.25 | 188.25 |
| 860 | 188.25 | 188.25 | 188.25 | 188.25 | 188.25 |
| 865 | 188.25 | 188.25 | 188.25 | 188.25 | 188.25 |
| 870 | 188.25 | 188.25 | 188.25 | 188.25 | 188.25 |
| 875 | 188.25 | 188.25 | 188.25 | 188.25 | 188.25 |
| 880 | 188.25 | 188.25 | 188.25 | 188.25 | 188.25 |
| 885 | 188.25 | 188.25 | 188.25 | 188.25 | 188.25 |
| 890 | 188.25 | 188.25 | 188.25 | 188.25 | 188.25 |
| 895 | 188.25 | 188.25 | 188.25 | 188.25 | 188.25 |
| 900 | 188.25 | 188.25 | 188.25 | 188.25 | 188.25 |
| 905 | 188.25 | 188.25 | 188.25 | 188.25 | 188.25 |
| 910 | 188.25 | 188.25 | 188.25 | 188.25 | 188.25 |
| 915 | 188.25 | 188.25 | 188.25 | 188.25 | 188.25 |
| 920 | 188.25 | 188.25 | 188.25 | 188.25 | 188.25 |
| 925 | 188.25 | 188.25 | 188.25 | 188.25 | 188.25 |
| 930 | 188.25 | 188.25 | 188.25 | 188.25 | 188.25 |
| 935 | 188.25 | 188.25 | 188.25 | 188.25 | 188.25 |
| 940 | 188.25 | 188.25 | 188.25 | 188.25 | 188.25 |
| 945 | 188.25 | 188.25 | 188.25 | 188.25 | 188.25 |
| 950 | 188.25 | 188.25 | 188.25 | 188.25 | 188.25 |
| 955 | 188.25 | 188.25 | 188.25 | 188.25 | 188.25 |
| 960 | 188.25 | 188.25 | 188.25 | 188.25 | 188.25 |
| 965 | 188.25 | 188.25 | 188.25 | 188.25 | 188.25 |
| 970 | 188.25 | 188.25 | 188.25 | 188.25 | 188.25 |
| 975 | 188.25 | 188.25 | 188.25 | 188.25 | 188.25 |
| 980 | 188.25 | 188.25 | 188.25 | 188.25 | 188.25 |
| 985 | 188.25 | 188.25 | 188.25 | 188.25 | 188.25 |
| 990 | 188.25 | 188.25 | 188.25 | 188.25 | 188.25 |
| 995 | 188.25 | 188.25 | 188.25 | 188.25 | 188.25 |
| 1,000 | 188.25 | 188.25 | 188.25 | 188.25 | 188.25 |
| 1,005 | 188.25 | 188.25 | 188.25 | 188.25 | 188.25 |
| 1,010 | 188.25 | 188.25 | 188.25 | 188.25 | 188.25 |
| 1,015 | 188.25 | 188.25 | 188.25 | 188.25 | 188.25 |

# Basin 2H Drawdown

Subsection: Time vs. Elevation
Label: 1 (OUT)
Scenario: Drawdown

Return Event: 100 years
Storm Event:

**Time vs. Elevation (ft)**

**Output Time increment = 1 min**
**Time on left represents time for first value in each row.**

| Time (min) | Elevation (ft) | Elevation (ft) | Elevation (ft) | Elevation (ft) | Elevation (ft) |
|---|---|---|---|---|---|
| 1,020 | 188.25 | 188.25 | 188.25 | 188.25 | 188.25 |
| 1,025 | 188.25 | 188.25 | 188.25 | 188.25 | 188.25 |
| 1,030 | 188.25 | 188.25 | 188.25 | 188.25 | 188.25 |
| 1,035 | 188.25 | 188.25 | 188.25 | 188.25 | 188.25 |
| 1,040 | 188.25 | 188.25 | 188.25 | 188.25 | 188.25 |
| 1,045 | 188.25 | 188.25 | 188.25 | 188.25 | 188.25 |
| 1,050 | 188.25 | 188.25 | 188.25 | 188.25 | 188.25 |
| 1,055 | 188.25 | 188.25 | 188.25 | 188.25 | 188.25 |
| 1,060 | 188.25 | 188.25 | 188.25 | 188.25 | 188.25 |
| 1,065 | 188.25 | 188.25 | 188.25 | 188.25 | 188.25 |
| 1,070 | 188.25 | 188.25 | 188.25 | 188.25 | 188.25 |
| 1,075 | 188.25 | 188.25 | 188.25 | 188.25 | 188.25 |
| 1,080 | 188.25 | 188.25 | 188.25 | 188.25 | 188.25 |
| 1,085 | 188.25 | 188.25 | 188.25 | 188.25 | 188.25 |
| 1,090 | 188.25 | 188.25 | 188.25 | 188.25 | 188.25 |
| 1,095 | 188.25 | 188.25 | 188.25 | 188.25 | 188.25 |
| 1,100 | 188.25 | 188.25 | 188.25 | 188.25 | 188.25 |
| 1,105 | 188.25 | 188.25 | 188.25 | 188.25 | 188.25 |
| 1,110 | 188.25 | 188.25 | 188.25 | 188.25 | 188.25 |
| 1,115 | 188.25 | 188.25 | 188.25 | 188.25 | 188.25 |
| 1,120 | 188.25 | 188.25 | 188.25 | 188.25 | 188.25 |
| 1,125 | 188.25 | 188.25 | 188.25 | 188.25 | 188.25 |
| 1,130 | 188.25 | 188.25 | 188.25 | 188.25 | 188.25 |
| 1,135 | 188.25 | 188.25 | 188.25 | 188.25 | 188.25 |
| 1,140 | 188.25 | 188.25 | 188.25 | 188.25 | 188.25 |
| 1,145 | 188.25 | 188.25 | 188.25 | 188.25 | 188.25 |
| 1,150 | 188.25 | 188.25 | 188.25 | 188.25 | 188.25 |
| 1,155 | 188.25 | 188.25 | 188.25 | 188.25 | 188.25 |
| 1,160 | 188.25 | 188.25 | 188.25 | 188.25 | 188.25 |
| 1,165 | 188.25 | 188.25 | 188.25 | 188.25 | 188.25 |
| 1,170 | 188.25 | 188.25 | 188.25 | 188.25 | 188.25 |
| 1,175 | 188.25 | 188.25 | 188.25 | 188.25 | 188.25 |
| 1,180 | 188.25 | 188.25 | 188.25 | 188.25 | 188.25 |
| 1,185 | 188.25 | 188.25 | 188.25 | 188.25 | 188.25 |
| 1,190 | 188.25 | 188.25 | 188.25 | 188.25 | 188.25 |
| 1,195 | 188.25 | 188.25 | 188.25 | 188.25 | 188.25 |
| 1,200 | 188.25 | 188.25 | 188.25 | 188.25 | 188.25 |
| 1,205 | 188.25 | 188.25 | 188.25 | 188.25 | 188.25 |
| 1,210 | 188.25 | 188.25 | 188.25 | 188.25 | 188.25 |
| 1,215 | 188.25 | 188.25 | 188.25 | 188.25 | 188.25 |
| 1,220 | 188.25 | 188.25 | 188.25 | 188.25 | 188.25 |

# Basin 2H Drawdown

Subsection: Time vs. Elevation
Label: 1 (OUT)
Scenario: Drawdown

Return Event: 100 years
Storm Event:

**Time vs. Elevation (ft)**

**Output Time increment = 1 min**
**Time on left represents time for first value in each row.**

| Time (min) | Elevation (ft) | Elevation (ft) | Elevation (ft) | Elevation (ft) | Elevation (ft) |
|---|---|---|---|---|---|
| 1,225 | 188.25 | 188.25 | 188.25 | 188.25 | 188.25 |
| 1,230 | 188.25 | 188.25 | 188.25 | 188.25 | 188.25 |
| 1,235 | 188.25 | 188.25 | 188.25 | 188.25 | 188.25 |
| 1,240 | 188.25 | 188.25 | 188.25 | 188.25 | 188.25 |
| 1,245 | 188.25 | 188.25 | 188.25 | 188.25 | 188.25 |
| 1,250 | 188.25 | 188.25 | 188.25 | 188.25 | 188.25 |
| 1,255 | 188.25 | 188.25 | 188.25 | 188.25 | 188.25 |
| 1,260 | 188.25 | 188.25 | 188.25 | 188.25 | 188.25 |
| 1,265 | 188.25 | 188.25 | 188.25 | 188.25 | 188.25 |
| 1,270 | 188.25 | 188.25 | 188.25 | 188.25 | 188.25 |
| 1,275 | 188.25 | 188.25 | 188.25 | 188.25 | 188.25 |
| 1,280 | 188.25 | 188.25 | 188.25 | 188.25 | 188.25 |
| 1,285 | 188.25 | 188.25 | 188.25 | 188.25 | 188.25 |
| 1,290 | 188.25 | 188.25 | 188.25 | 188.25 | 188.25 |
| 1,295 | 188.25 | 188.25 | 188.25 | 188.25 | 188.25 |
| 1,300 | 188.25 | 188.25 | 188.25 | 188.25 | 188.25 |
| 1,305 | 188.25 | 188.25 | 188.25 | 188.25 | 188.25 |
| 1,310 | 188.25 | 188.25 | 188.25 | 188.25 | 188.25 |
| 1,315 | 188.25 | 188.25 | 188.25 | 188.25 | 188.25 |
| 1,320 | 188.25 | 188.25 | 188.25 | 188.25 | 188.25 |
| 1,325 | 188.25 | 188.25 | 188.25 | 188.25 | 188.25 |
| 1,330 | 188.25 | 188.25 | 188.25 | 188.25 | 188.25 |
| 1,335 | 188.25 | 188.25 | 188.25 | 188.25 | 188.25 |
| 1,340 | 188.25 | 188.25 | 188.25 | 188.25 | 188.25 |
| 1,345 | 188.25 | 188.25 | 188.25 | 188.25 | 188.25 |
| 1,350 | 188.25 | 188.25 | 188.25 | 188.25 | 188.25 |
| 1,355 | 188.25 | 188.25 | 188.25 | 188.25 | 188.25 |
| 1,360 | 188.25 | 188.25 | 188.25 | 188.25 | 188.25 |
| 1,365 | 188.25 | 188.25 | 188.25 | 188.25 | 188.25 |
| 1,370 | 188.25 | 188.25 | 188.25 | 188.25 | 188.25 |
| 1,375 | 188.25 | 188.25 | 188.25 | 188.25 | 188.25 |
| 1,380 | 188.25 | 188.25 | 188.25 | 188.25 | 188.25 |
| 1,385 | 188.25 | 188.25 | 188.25 | 188.25 | 188.25 |
| 1,390 | 188.25 | 188.25 | 188.25 | 188.25 | 188.25 |
| 1,395 | 188.25 | 188.25 | 188.25 | 188.25 | 188.25 |
| 1,400 | 188.25 | 188.25 | 188.25 | 188.25 | 188.25 |
| 1,405 | 188.25 | 188.25 | 188.25 | 188.25 | 188.25 |
| 1,410 | 188.25 | 188.25 | 188.25 | 188.25 | 188.25 |
| 1,415 | 188.25 | 188.25 | 188.25 | 188.25 | 188.25 |
| 1,420 | 188.25 | 188.25 | 188.25 | 188.25 | 188.25 |
| 1,425 | 188.25 | 188.25 | 188.25 | 188.25 | 188.25 |

# Basin 2H Drawdown

Subsection: Time vs. Elevation
Label: 1 (OUT)
Scenario: Drawdown

Return Event: 100 years
Storm Event:

**Time vs. Elevation (ft)**

**Output Time increment = 1 min**
**Time on left represents time for first value in each row.**

| Time (min) | Elevation (ft) | Elevation (ft) | Elevation (ft) | Elevation (ft) | Elevation (ft) |
|---|---|---|---|---|---|
| 1,430 | 188.25 | 188.25 | 188.25 | 188.25 | 188.25 |
| 1,435 | 188.25 | 188.25 | 188.25 | 188.25 | 188.25 |
| 1,440 | 188.25 | 188.25 | 188.25 | 188.25 | 188.25 |
| 1,445 | 188.25 | 188.25 | 188.25 | 188.25 | 188.25 |
| 1,450 | 188.25 | 188.25 | 188.25 | 188.25 | 188.25 |
| 1,455 | 188.25 | 188.25 | 188.25 | 188.25 | 188.25 |
| 1,460 | 188.25 | 188.25 | 188.25 | 188.25 | 188.25 |
| 1,465 | 188.25 | 188.25 | 188.25 | 188.25 | 188.25 |
| 1,470 | 188.25 | 188.25 | 188.25 | 188.25 | 188.25 |
| 1,475 | 188.25 | 188.25 | 188.25 | 188.25 | 188.25 |
| 1,480 | 188.25 | 188.25 | 188.25 | 188.25 | 188.25 |
| 1,485 | 188.25 | 188.25 | 188.25 | 188.25 | 188.25 |
| 1,490 | 188.25 | 188.25 | 188.25 | 188.25 | 188.25 |
| 1,495 | 188.25 | 188.25 | 188.25 | 188.25 | 188.25 |
| 1,500 | 188.25 | 188.25 | 188.25 | 188.25 | 188.25 |
| 1,505 | 188.25 | 188.25 | 188.25 | 188.25 | 188.25 |
| 1,510 | 188.25 | 188.25 | 188.25 | 188.25 | 188.25 |
| 1,515 | 188.25 | 188.25 | 188.25 | 188.25 | 188.25 |
| 1,520 | 188.25 | 188.25 | 188.25 | 188.25 | 188.25 |
| 1,525 | 188.25 | 188.25 | 188.25 | 188.25 | 188.25 |
| 1,530 | 188.25 | 188.25 | 188.25 | 188.25 | 188.25 |
| 1,535 | 188.25 | 188.25 | 188.25 | 188.25 | 188.25 |
| 1,540 | 188.25 | 188.25 | 188.25 | 188.25 | 188.25 |
| 1,545 | 188.25 | 188.25 | 188.25 | 188.25 | 188.25 |
| 1,550 | 188.25 | 188.25 | 188.25 | 188.25 | 188.25 |
| 1,555 | 188.25 | 188.25 | 188.25 | 188.25 | 188.25 |
| 1,560 | 188.25 | 188.25 | 188.25 | 188.25 | 188.25 |
| 1,565 | 188.25 | 188.25 | 188.25 | 188.25 | 188.25 |
| 1,570 | 188.25 | 188.25 | 188.25 | 188.25 | 188.25 |
| 1,575 | 188.25 | 188.25 | 188.25 | 188.25 | 188.25 |
| 1,580 | 188.25 | 188.25 | 188.25 | 188.25 | 188.25 |
| 1,585 | 188.25 | 188.25 | 188.25 | 188.25 | 188.25 |
| 1,590 | 188.25 | 188.25 | 188.25 | 188.25 | 188.25 |
| 1,595 | 188.25 | 188.25 | 188.25 | 188.25 | 188.25 |
| 1,600 | 188.25 | 188.25 | 188.25 | 188.25 | 188.25 |
| 1,605 | 188.25 | 188.25 | 188.25 | 188.25 | 188.25 |
| 1,610 | 188.25 | 188.25 | 188.25 | 188.25 | 188.25 |
| 1,615 | 188.25 | 188.25 | 188.25 | 188.25 | 188.25 |
| 1,620 | 188.25 | 188.25 | 188.25 | 188.25 | 188.25 |
| 1,625 | 188.25 | 188.25 | 188.25 | 188.25 | 188.25 |
| 1,630 | 188.25 | 188.25 | 188.25 | 188.25 | 188.25 |

# Basin 2H Drawdown

Subsection: Time vs. Elevation
Label: 1 (OUT)
Scenario: Drawdown

Return Event: 100 years
Storm Event:

**Time vs. Elevation (ft)**

**Output Time increment = 1 min**
**Time on left represents time for first value in each row.**

| Time (min) | Elevation (ft) | Elevation (ft) | Elevation (ft) | Elevation (ft) | Elevation (ft) |
|---|---|---|---|---|---|
| 1,635 | 188.25 | 188.25 | 188.25 | 188.25 | 188.25 |
| 1,640 | 188.25 | 188.25 | 188.25 | 188.25 | 188.25 |
| 1,645 | 188.25 | 188.25 | 188.25 | 188.25 | 188.25 |
| 1,650 | 188.25 | 188.25 | 188.25 | 188.25 | 188.25 |
| 1,655 | 188.25 | 188.25 | 188.25 | 188.25 | 188.25 |
| 1,660 | 188.25 | 188.25 | 188.25 | 188.25 | 188.25 |
| 1,665 | 188.25 | 188.25 | 188.25 | 188.25 | 188.25 |
| 1,670 | 188.25 | 188.25 | 188.25 | 188.25 | 188.25 |
| 1,675 | 188.25 | 188.25 | 188.25 | 188.25 | 188.25 |
| 1,680 | 188.25 | 188.25 | 188.25 | 188.25 | 188.25 |
| 1,685 | 188.25 | 188.25 | 188.25 | 188.25 | 188.25 |
| 1,690 | 188.25 | 188.25 | 188.25 | 188.25 | 188.25 |
| 1,695 | 188.25 | 188.25 | 188.25 | 188.25 | 188.25 |
| 1,700 | 188.25 | 188.25 | 188.25 | 188.25 | 188.25 |
| 1,705 | 188.25 | 188.25 | 188.25 | 188.25 | 188.25 |
| 1,710 | 188.25 | 188.25 | 188.25 | 188.25 | 188.25 |
| 1,715 | 188.25 | 188.25 | 188.25 | 188.25 | 188.25 |
| 1,720 | 188.25 | 188.25 | 188.25 | 188.25 | 188.25 |
| 1,725 | 188.25 | 188.25 | 188.25 | 188.25 | 188.25 |
| 1,730 | 188.25 | 188.25 | 188.25 | 188.25 | 188.25 |
| 1,735 | 188.25 | 188.25 | 188.25 | 188.25 | 188.25 |
| 1,740 | 188.25 | 188.25 | 188.25 | 188.25 | 188.25 |
| 1,745 | 188.25 | 188.25 | 188.25 | 188.25 | 188.25 |
| 1,750 | 188.25 | 188.25 | 188.25 | 188.25 | 188.25 |
| 1,755 | 188.25 | 188.25 | 188.25 | 188.25 | 188.25 |
| 1,760 | 188.25 | 188.25 | 188.25 | 188.25 | 188.25 |
| 1,765 | 188.25 | 188.25 | 188.25 | 188.25 | 188.25 |
| 1,770 | 188.25 | 188.25 | 188.25 | 188.25 | 188.25 |
| 1,775 | 188.25 | 188.25 | 188.25 | 188.25 | 188.25 |
| 1,780 | 188.25 | 188.25 | 188.25 | 188.25 | 188.25 |
| 1,785 | 188.25 | 188.25 | 188.25 | 188.25 | 188.25 |
| 1,790 | 188.25 | 188.25 | 188.25 | 188.25 | 188.25 |
| 1,795 | 188.25 | 188.25 | 188.25 | 188.25 | 188.25 |
| 1,800 | 188.25 | 188.25 | 188.25 | 188.25 | 188.25 |
| 1,805 | 188.25 | 188.25 | 188.25 | 188.25 | 188.25 |
| 1,810 | 188.25 | 188.25 | 188.25 | 188.25 | 188.25 |
| 1,815 | 188.25 | 188.25 | 188.25 | 188.25 | 188.25 |
| 1,820 | 188.25 | 188.25 | 188.25 | 188.25 | 188.25 |
| 1,825 | 188.25 | 188.25 | 188.25 | 188.25 | 188.25 |
| 1,830 | 188.25 | 188.25 | 188.25 | 188.25 | 188.25 |
| 1,835 | 188.25 | 188.25 | 188.25 | 188.25 | 188.25 |

# Basin 2H Drawdown

Subsection: Time vs. Elevation
Label: 1 (OUT)
Scenario: Drawdown

Return Event: 100 years
Storm Event:

**Time vs. Elevation (ft)**

**Output Time increment = 1 min**
**Time on left represents time for first value in each row.**

| Time (min) | Elevation (ft) | Elevation (ft) | Elevation (ft) | Elevation (ft) | Elevation (ft) |
|---|---|---|---|---|---|
| 1,840 | 188.25 | 188.25 | 188.25 | 188.25 | 188.25 |
| 1,845 | 188.25 | 188.25 | 188.25 | 188.25 | 188.25 |
| 1,850 | 188.25 | 188.25 | 188.25 | 188.25 | 188.25 |
| 1,855 | 188.25 | 188.25 | 188.25 | 188.25 | 188.25 |
| 1,860 | 188.25 | 188.25 | 188.25 | 188.25 | 188.25 |
| 1,865 | 188.25 | 188.25 | 188.25 | 188.25 | 188.25 |
| 1,870 | 188.25 | 188.25 | 188.25 | 188.25 | 188.25 |
| 1,875 | 188.25 | 188.25 | 188.25 | 188.25 | 188.25 |
| 1,880 | 188.25 | 188.25 | 188.25 | 188.25 | 188.25 |
| 1,885 | 188.25 | 188.25 | 188.25 | 188.25 | 188.25 |
| 1,890 | 188.25 | 188.25 | 188.25 | 188.25 | 188.25 |
| 1,895 | 188.25 | 188.25 | 188.25 | 188.25 | 188.25 |
| 1,900 | 188.25 | 188.25 | 188.25 | 188.25 | 188.25 |
| 1,905 | 188.25 | 188.25 | 188.25 | 188.25 | 188.25 |
| 1,910 | 188.25 | 188.25 | 188.25 | 188.25 | 188.25 |
| 1,915 | 188.25 | 188.25 | 188.25 | 188.25 | 188.25 |
| 1,920 | 188.25 | 188.25 | 188.25 | 188.25 | 188.25 |
| 1,925 | 188.25 | 188.25 | 188.25 | 188.25 | 188.25 |
| 1,930 | 188.25 | 188.25 | 188.25 | 188.25 | 188.25 |
| 1,935 | 188.25 | 188.25 | 188.25 | 188.25 | 188.25 |
| 1,940 | 188.25 | 188.25 | 188.25 | 188.25 | 188.25 |
| 1,945 | 188.25 | 188.25 | 188.25 | 188.25 | 188.25 |
| 1,950 | 188.25 | 188.25 | 188.25 | 188.25 | 188.25 |
| 1,955 | 188.25 | 188.25 | 188.25 | 188.25 | 188.25 |
| 1,960 | 188.25 | 188.25 | 188.25 | 188.25 | 188.25 |
| 1,965 | 188.25 | 188.25 | 188.25 | 188.25 | 188.25 |
| 1,970 | 188.25 | 188.25 | 188.25 | 188.25 | 188.25 |
| 1,975 | 188.25 | 188.25 | 188.25 | 188.25 | 188.25 |
| 1,980 | 188.25 | 188.25 | 188.25 | 188.25 | 188.25 |
| 1,985 | 188.25 | 188.25 | 188.25 | 188.25 | 188.25 |
| 1,990 | 188.25 | 188.25 | 188.25 | 188.25 | 188.25 |
| 1,995 | 188.25 | 188.25 | 188.25 | 188.25 | 188.25 |
| 2,000 | 188.25 | (N/A) | (N/A) | (N/A) | (N/A) |

# Basin 2H Drawdown

Subsection: Outlet Input Data
Label: Outlet#1 w Underdrain
Scenario: Drawdown

Return Event: 100 years
Storm Event:

| Requested Pond Water Surface Elevations | |
|---|---|
| Minimum (Headwater) | 188.00 ft |
| Increment (Headwater) | 0.10 ft |
| Maximum (Headwater) | 195.00 ft |

## Outlet Connectivity

| Structure Type | Outlet ID | Direction | Outfall | E1 (ft) | E2 (ft) |
|---|---|---|---|---|---|
| Orifice-Area | Orifice - LF | Forward | TW | 191.75 | 195.00 |
| Inlet Box | Riser - 1 | Forward | TW | 193.15 | 195.00 |
| Orifice-Circular | Orifice - Underdrain | Forward | TW | 188.25 | 195.00 |
| Tailwater Settings | Tailwater | | | (N/A) | (N/A) |

# Basin 2H Drawdown

Subsection: Outlet Input Data
Label: Outlet#1 w Underdrain
Scenario: Drawdown

Return Event: 100 years
Storm Event:

| Structure ID: Riser - 1<br>Structure Type: Inlet Box | |
|---|---|
| Number of Openings | 1 |
| Elevation | 193.15 ft |
| Orifice Area | 9.6 ft² |
| Orifice Coefficient | 0.600 |
| Weir Length | 12.40 ft |
| Weir Coefficient | 3.00 (ft^0.5)/s |
| K Reverse | 1.000 |
| Manning's n | 0.000 |
| Kev, Charged Riser | 0.000 |
| Weir Submergence | False |
| Orifice H to crest | True |

| Structure ID: Orifice - LF<br>Structure Type: Orifice-Area | |
|---|---|
| Number of Openings | 4 |
| Elevation | 191.75 ft |
| Orifice Area | 0.8 ft² |
| Top Elevation | 192.25 ft |
| Datum Elevation | 191.75 ft |
| Orifice Coefficient | 0.600 |

| Structure ID: Orifice - Underdrain<br>Structure Type: Orifice-Circular | |
|---|---|
| Number of Openings | 1 |
| Elevation | 188.25 ft |
| Orifice Diameter | 2.0 in |
| Orifice Coefficient | 0.600 |

| Structure ID: TW<br>Structure Type: TW Setup, DS Channel | |
|---|---|
| Tailwater Type | Free Outfall |

| Convergence Tolerances | |
|---|---|
| Maximum Iterations | 80 |
| Tailwater Tolerance (Minimum) | 0.01 ft |
| Tailwater Tolerance (Maximum) | 0.10 ft |
| Headwater Tolerance (Minimum) | 0.01 ft |

# Basin 2H Drawdown

Subsection: Outlet Input Data
Label: Outlet#1 w Underdrain
Scenario: Drawdown

Return Event: 100 years
Storm Event:

| Convergence Tolerances | |
|---|---|
| Headwater Tolerance (Maximum) | 0.10 ft |
| Flow Tolerance (Minimum) | 0.001 ft³/s |
| Flow Tolerance (Maximum) | 10.000 ft³/s |

# Basin 2H Drawdown

Subsection: Elevation-Volume-Flow Table (Pond)
Label: 1
Scenario: Drawdown

Return Event: 100 years
Storm Event:

| Infiltration | |
|---|---|
| Infiltration Method (Computed) | No Infiltration |

| Initial Conditions | |
|---|---|
| Elevation (Water Surface, Initial) | 195.00 ft |
| Volume (Initial) | 0.797 ac-ft |
| Flow (Initial Outlet) | 90.88 ft³/s |
| Flow (Initial Infiltration) | 0.00 ft³/s |
| Flow (Initial, Total) | 90.88 ft³/s |
| Time Increment | 1 min |

| Elevation (ft) | Outflow (ft³/s) | Storage (ac-ft) | Area (ft²) | Infiltration (ft³/s) | Flow (Total) (ft³/s) | 2S/t + O (ft³/s) |
|---|---|---|---|---|---|---|
| 188.00 | 0.00 | 0.000 | 10.000 | 0.00 | 0.00 | 0.00 |
| 188.10 | 0.00 | 0.000 | 10.000 | 0.00 | 0.00 | 0.03 |
| 188.20 | 0.00 | 0.000 | 10.000 | 0.00 | 0.00 | 0.07 |
| 188.25 | 0.00 | 0.000 | 10.000 | 0.00 | 0.00 | 0.08 |
| 188.30 | 0.00 | 0.000 | 10.000 | 0.00 | 0.00 | 0.10 |
| 188.40 | 0.02 | 0.000 | 10.000 | 0.00 | 0.02 | 0.16 |
| 188.50 | 0.04 | 0.000 | 10.000 | 0.00 | 0.04 | 0.21 |
| 188.60 | 0.05 | 0.000 | 10.000 | 0.00 | 0.05 | 0.25 |
| 188.70 | 0.06 | 0.000 | 10.000 | 0.00 | 0.06 | 0.30 |
| 188.80 | 0.07 | 0.000 | 10.000 | 0.00 | 0.07 | 0.34 |
| 188.90 | 0.08 | 0.000 | 10.000 | 0.00 | 0.08 | 0.38 |
| 189.00 | 0.09 | 0.000 | 10.000 | 0.00 | 0.09 | 0.42 |
| 189.10 | 0.09 | 0.000 | 10.000 | 0.00 | 0.09 | 0.46 |
| 189.20 | 0.10 | 0.000 | 10.000 | 0.00 | 0.10 | 0.50 |
| 189.30 | 0.10 | 0.000 | 10.000 | 0.00 | 0.10 | 0.54 |
| 189.40 | 0.11 | 0.000 | 10.000 | 0.00 | 0.11 | 0.58 |
| 189.50 | 0.11 | 0.000 | 10.000 | 0.00 | 0.11 | 0.61 |
| 189.60 | 0.12 | 0.000 | 10.000 | 0.00 | 0.12 | 0.65 |
| 189.70 | 0.12 | 0.000 | 10.000 | 0.00 | 0.12 | 0.69 |
| 189.80 | 0.13 | 0.000 | 10.000 | 0.00 | 0.13 | 0.73 |
| 189.90 | 0.13 | 0.000 | 10.000 | 0.00 | 0.13 | 0.76 |
| 190.00 | 0.14 | 0.000 | 10.000 | 0.00 | 0.14 | 0.80 |
| 190.10 | 0.14 | 0.000 | 10.000 | 0.00 | 0.14 | 0.84 |
| 190.20 | 0.14 | 0.001 | 10.000 | 0.00 | 0.14 | 0.88 |
| 190.30 | 0.15 | 0.001 | 10.000 | 0.00 | 0.15 | 0.91 |
| 190.40 | 0.15 | 0.001 | 10.000 | 0.00 | 0.15 | 0.95 |
| 190.50 | 0.15 | 0.001 | 10.000 | 0.00 | 0.15 | 0.99 |
| 190.60 | 0.16 | 0.001 | 10.000 | 0.00 | 0.16 | 1.02 |
| 190.70 | 0.16 | 0.001 | 10.000 | 0.00 | 0.16 | 1.06 |

# Basin 2H Drawdown

Subsection: Elevation-Volume-Flow Table (Pond) Return Event: 100 years
Label: 1 Storm Event:
Scenario: Drawdown

| Elevation (ft) | Outflow (ft³/s) | Storage (ac-ft) | Area (ft²) | Infiltration (ft³/s) | Flow (Total) (ft³/s) | 2S/t + O (ft³/s) |
|---|---|---|---|---|---|---|
| 190.80 | 0.16 | 0.001 | 10.000 | 0.00 | 0.16 | 1.10 |
| 190.90 | 0.17 | 0.001 | 10.000 | 0.00 | 0.17 | 1.13 |
| 191.00 | 0.17 | 0.001 | 5,981.000 | 0.00 | 0.17 | 1.86 |
| 191.10 | 0.17 | 0.015 | 6,092.838 | 0.00 | 0.17 | 21.99 |
| 191.20 | 0.18 | 0.029 | 6,205.712 | 0.00 | 0.18 | 42.49 |
| 191.30 | 0.18 | 0.044 | 6,319.622 | 0.00 | 0.18 | 63.37 |
| 191.40 | 0.18 | 0.058 | 6,434.568 | 0.00 | 0.18 | 84.63 |
| 191.50 | 0.19 | 0.073 | 6,550.550 | 0.00 | 0.19 | 106.27 |
| 191.60 | 0.19 | 0.088 | 6,667.568 | 0.00 | 0.19 | 128.30 |
| 191.70 | 0.19 | 0.104 | 6,785.622 | 0.00 | 0.19 | 150.73 |
| 191.75 | 0.19 | 0.111 | 6,845.038 | 0.00 | 0.19 | 162.09 |
| 191.80 | 1.28 | 0.119 | 6,904.712 | 0.00 | 1.28 | 174.64 |
| 191.90 | 3.47 | 0.135 | 7,024.838 | 0.00 | 3.47 | 200.03 |
| 192.00 | 5.65 | 0.152 | 7,146.000 | 0.00 | 5.65 | 225.83 |
| 192.10 | 7.83 | 0.168 | 7,290.308 | 0.00 | 7.83 | 252.07 |
| 192.20 | 10.01 | 0.185 | 7,436.059 | 0.00 | 10.01 | 278.80 |
| 192.30 | 11.63 | 0.202 | 7,583.253 | 0.00 | 11.63 | 305.45 |
| 192.40 | 12.63 | 0.220 | 7,731.889 | 0.00 | 12.63 | 331.97 |
| 192.50 | 13.55 | 0.238 | 7,881.968 | 0.00 | 13.55 | 358.92 |
| 192.60 | 14.42 | 0.256 | 8,033.489 | 0.00 | 14.42 | 386.31 |
| 192.70 | 15.23 | 0.275 | 8,186.453 | 0.00 | 15.23 | 414.16 |
| 192.80 | 16.00 | 0.294 | 8,340.859 | 0.00 | 16.00 | 442.48 |
| 192.90 | 16.74 | 0.313 | 8,496.708 | 0.00 | 16.74 | 471.27 |
| 193.00 | 17.45 | 0.333 | 8,654.000 | 0.00 | 17.45 | 500.56 |
| 193.10 | 18.12 | 0.353 | 8,794.415 | 0.00 | 18.12 | 530.32 |
| 193.15 | 18.45 | 0.363 | 8,865.046 | 0.00 | 18.45 | 545.37 |
| 193.20 | 19.19 | 0.373 | 8,935.960 | 0.00 | 19.19 | 560.94 |
| 193.30 | 21.57 | 0.394 | 9,078.635 | 0.00 | 21.57 | 593.34 |
| 193.40 | 24.67 | 0.415 | 9,222.440 | 0.00 | 24.67 | 626.94 |
| 193.50 | 28.32 | 0.436 | 9,367.375 | 0.00 | 28.32 | 661.57 |
| 193.60 | 32.42 | 0.458 | 9,513.440 | 0.00 | 32.42 | 697.14 |
| 193.70 | 36.92 | 0.480 | 9,660.635 | 0.00 | 36.92 | 733.60 |
| 193.80 | 41.79 | 0.502 | 9,808.960 | 0.00 | 41.79 | 770.92 |
| 193.90 | 46.99 | 0.525 | 9,958.415 | 0.00 | 46.99 | 809.07 |
| 194.00 | 52.50 | 0.548 | 10,109.000 | 0.00 | 52.50 | 848.03 |
| 194.10 | 58.31 | 0.571 | 10,256.211 | 0.00 | 58.31 | 887.77 |
| 194.20 | 64.39 | 0.595 | 10,404.487 | 0.00 | 64.39 | 928.28 |
| 194.30 | 70.73 | 0.619 | 10,553.827 | 0.00 | 70.73 | 969.55 |
| 194.40 | 76.99 | 0.643 | 10,704.230 | 0.00 | 76.99 | 1,011.25 |
| 194.50 | 79.49 | 0.668 | 10,855.698 | 0.00 | 79.49 | 1,049.68 |
| 194.60 | 81.90 | 0.693 | 11,008.230 | 0.00 | 81.90 | 1,088.53 |
| 194.70 | 84.24 | 0.719 | 11,161.827 | 0.00 | 84.24 | 1,127.82 |
| 194.80 | 86.52 | 0.745 | 11,316.487 | 0.00 | 86.52 | 1,167.56 |

# Basin 2H Drawdown

Subsection: Elevation-Volume-Flow Table (Pond) Return Event: 100 years
Label: 1 Storm Event:
Scenario: Drawdown

| Elevation (ft) | Outflow (ft³/s) | Storage (ac-ft) | Area (ft²) | Infiltration (ft³/s) | Flow (Total) (ft³/s) | 2S/t + O (ft³/s) |
|---|---|---|---|---|---|---|
| 194.90 | 88.73 | 0.771 | 11,472.211 | 0.00 | 88.73 | 1,207.75 |
| 195.00 | 90.88 | 0.797 | 11,629.000 | 0.00 | 90.88 | 1,248.41 |

# Basin 2H Drawdown

## Index

1

1 (Elevation-Volume-Flow Table (Pond))...

1 (Elevation-Volume-Flow Table (Pond), 100 years (Drawdown))...14, 15, 16

1 (OUT) (Time vs. Elevation)...

1 (OUT) (Time vs. Elevation, 100 years (Drawdown))...1, 2, 3, 4, 5, 6, 7, 8, 9, 10

O

Outlet#1 w Underdrain (Outlet Input Data)...

Outlet#1 w Underdrain (Outlet Input Data, 100 years (Drawdown))...11, 12, 13

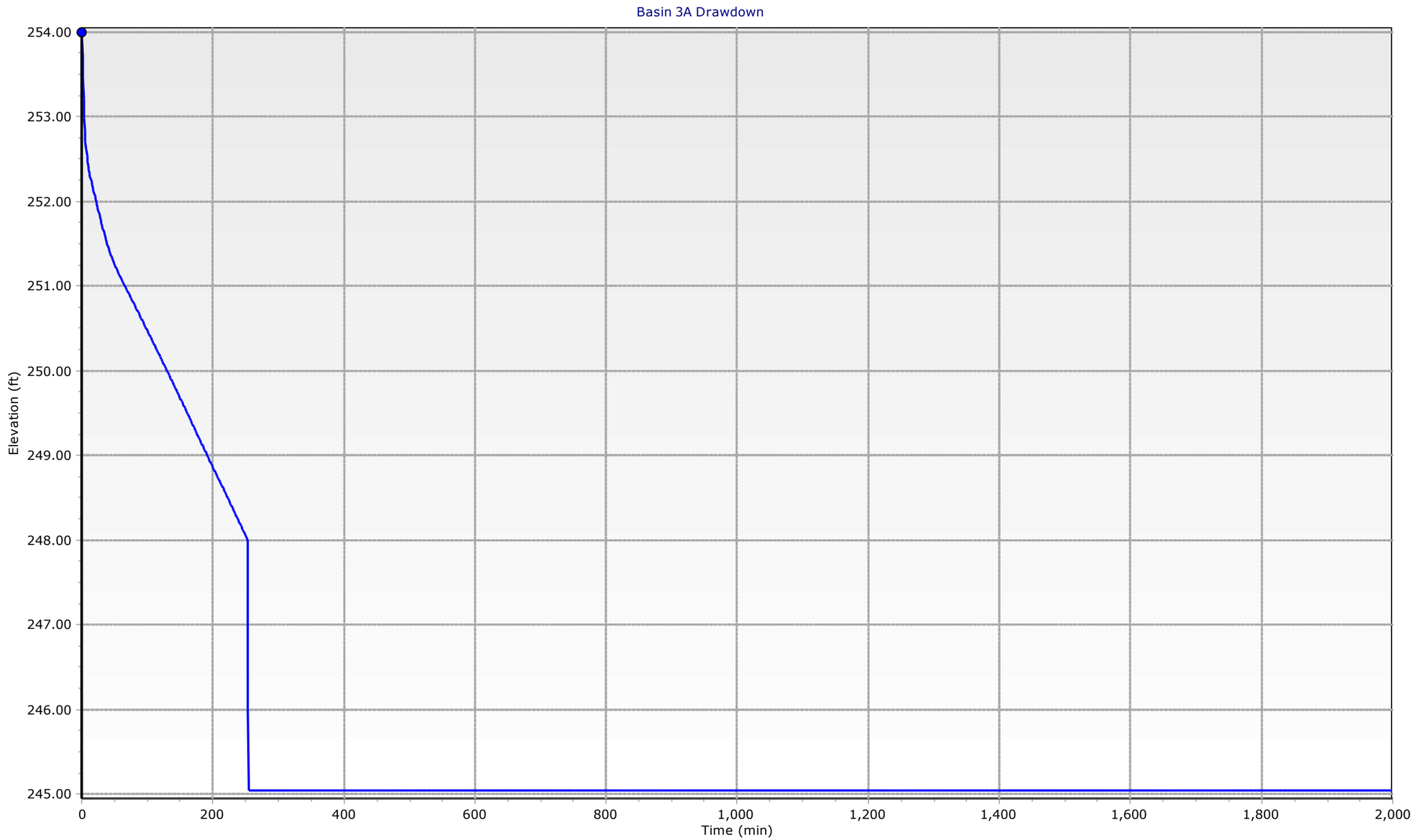
Basin 3A Drawdown
254.00
253.00
252.00
251.00
250.00
249.00
248.00
247.00
246.00
245.00
Elevation (ft)
0
200
400
600
800
1,000
1,200
1,400
1,600
1,800
2,000
Time (min)
1 - Drawdown - Elevation

# Table of Contents


| | | |
|---|---|---|
| 1 (OUT) | Time vs. Elevation | 1 |
| Outlet#1 | Outlet Input Data | 11 |
| 1 | Elevation-Volume-Flow Table (Pond) | 14 |

# Basin 3A Drawdown

Subsection: Time vs. Elevation
Label: 1 (OUT)
Scenario: Drawdown

Return Event: 100 years
Storm Event:

**Time vs. Elevation (ft)**

**Output Time increment = 1 min**
**Time on left represents time for first value in each row.**

| Time (min) | Elevation (ft) | Elevation (ft) | Elevation (ft) | Elevation (ft) | Elevation (ft) |
|---|---|---|---|---|---|
| 0 | 254.00 | 253.72 | 253.46 | 253.21 | 253.00 |
| 5 | 252.83 | 252.71 | 252.61 | 252.53 | 252.47 |
| 10 | 252.42 | 252.38 | 252.34 | 252.30 | 252.27 |
| 15 | 252.23 | 252.20 | 252.16 | 252.13 | 252.10 |
| 20 | 252.06 | 252.03 | 252.00 | 251.97 | 251.93 |
| 25 | 251.90 | 251.87 | 251.84 | 251.81 | 251.78 |
| 30 | 251.75 | 251.72 | 251.69 | 251.66 | 251.63 |
| 35 | 251.61 | 251.58 | 251.55 | 251.52 | 251.50 |
| 40 | 251.47 | 251.45 | 251.42 | 251.40 | 251.38 |
| 45 | 251.36 | 251.34 | 251.32 | 251.30 | 251.28 |
| 50 | 251.26 | 251.24 | 251.22 | 251.20 | 251.19 |
| 55 | 251.17 | 251.15 | 251.14 | 251.12 | 251.11 |
| 60 | 251.09 | 251.07 | 251.06 | 251.04 | 251.03 |
| 65 | 251.01 | 251.00 | 250.98 | 250.97 | 250.95 |
| 70 | 250.94 | 250.92 | 250.91 | 250.89 | 250.88 |
| 75 | 250.86 | 250.85 | 250.83 | 250.82 | 250.80 |
| 80 | 250.79 | 250.77 | 250.75 | 250.74 | 250.72 |
| 85 | 250.71 | 250.69 | 250.68 | 250.66 | 250.65 |
| 90 | 250.63 | 250.62 | 250.60 | 250.58 | 250.57 |
| 95 | 250.55 | 250.54 | 250.52 | 250.51 | 250.49 |
| 100 | 250.48 | 250.46 | 250.44 | 250.43 | 250.41 |
| 105 | 250.40 | 250.38 | 250.37 | 250.35 | 250.33 |
| 110 | 250.32 | 250.30 | 250.29 | 250.27 | 250.26 |
| 115 | 250.24 | 250.22 | 250.21 | 250.19 | 250.18 |
| 120 | 250.16 | 250.15 | 250.13 | 250.11 | 250.10 |
| 125 | 250.08 | 250.07 | 250.05 | 250.03 | 250.02 |
| 130 | 250.00 | 249.99 | 249.97 | 249.95 | 249.94 |
| 135 | 249.92 | 249.91 | 249.89 | 249.87 | 249.86 |
| 140 | 249.84 | 249.83 | 249.81 | 249.79 | 249.78 |
| 145 | 249.76 | 249.74 | 249.73 | 249.71 | 249.70 |
| 150 | 249.68 | 249.66 | 249.65 | 249.63 | 249.61 |
| 155 | 249.60 | 249.58 | 249.57 | 249.55 | 249.53 |
| 160 | 249.52 | 249.50 | 249.48 | 249.47 | 249.45 |
| 165 | 249.43 | 249.42 | 249.40 | 249.39 | 249.37 |
| 170 | 249.35 | 249.34 | 249.32 | 249.30 | 249.29 |
| 175 | 249.27 | 249.25 | 249.24 | 249.22 | 249.20 |
| 180 | 249.19 | 249.17 | 249.16 | 249.14 | 249.12 |
| 185 | 249.11 | 249.09 | 249.07 | 249.06 | 249.04 |
| 190 | 249.02 | 249.01 | 248.99 | 248.97 | 248.96 |
| 195 | 248.94 | 248.93 | 248.91 | 248.89 | 248.88 |

# Basin 3A Drawdown

Subsection: Time vs. Elevation
Label: 1 (OUT)
Scenario: Drawdown

Return Event: 100 years
Storm Event:

**Time vs. Elevation (ft)**

**Output Time increment = 1 min**
**Time on left represents time for first value in each row.**

| Time (min) | Elevation (ft) | Elevation (ft) | Elevation (ft) | Elevation (ft) | Elevation (ft) |
|---|---|---|---|---|---|
| 200 | 248.86 | 248.85 | 248.83 | 248.81 | 248.80 |
| 205 | 248.78 | 248.77 | 248.75 | 248.73 | 248.72 |
| 210 | 248.70 | 248.69 | 248.67 | 248.65 | 248.64 |
| 215 | 248.62 | 248.61 | 248.59 | 248.57 | 248.56 |
| 220 | 248.54 | 248.53 | 248.51 | 248.49 | 248.48 |
| 225 | 248.46 | 248.45 | 248.43 | 248.41 | 248.40 |
| 230 | 248.38 | 248.36 | 248.35 | 248.33 | 248.31 |
| 235 | 248.30 | 248.28 | 248.27 | 248.25 | 248.23 |
| 240 | 248.22 | 248.20 | 248.18 | 248.17 | 248.15 |
| 245 | 248.13 | 248.12 | 248.10 | 248.08 | 248.07 |
| 250 | 248.05 | 248.03 | 248.02 | 248.00 | 246.00 |
| 255 | 245.04 | 245.04 | 245.04 | 245.04 | 245.04 |
| 260 | 245.04 | 245.04 | 245.04 | 245.04 | 245.04 |
| 265 | 245.04 | 245.04 | 245.04 | 245.04 | 245.04 |
| 270 | 245.04 | 245.04 | 245.04 | 245.04 | 245.04 |
| 275 | 245.04 | 245.04 | 245.04 | 245.04 | 245.04 |
| 280 | 245.04 | 245.04 | 245.04 | 245.04 | 245.04 |
| 285 | 245.04 | 245.04 | 245.04 | 245.04 | 245.04 |
| 290 | 245.04 | 245.04 | 245.04 | 245.04 | 245.04 |
| 295 | 245.04 | 245.04 | 245.04 | 245.04 | 245.04 |
| 300 | 245.04 | 245.04 | 245.04 | 245.04 | 245.04 |
| 305 | 245.04 | 245.04 | 245.04 | 245.04 | 245.04 |
| 310 | 245.04 | 245.04 | 245.04 | 245.04 | 245.04 |
| 315 | 245.04 | 245.04 | 245.04 | 245.04 | 245.04 |
| 320 | 245.04 | 245.04 | 245.04 | 245.04 | 245.04 |
| 325 | 245.04 | 245.04 | 245.04 | 245.04 | 245.04 |
| 330 | 245.04 | 245.04 | 245.04 | 245.04 | 245.04 |
| 335 | 245.04 | 245.04 | 245.04 | 245.04 | 245.04 |
| 340 | 245.04 | 245.04 | 245.04 | 245.04 | 245.04 |
| 345 | 245.04 | 245.04 | 245.04 | 245.04 | 245.04 |
| 350 | 245.04 | 245.04 | 245.04 | 245.04 | 245.04 |
| 355 | 245.04 | 245.04 | 245.04 | 245.04 | 245.04 |
| 360 | 245.04 | 245.04 | 245.04 | 245.04 | 245.04 |
| 365 | 245.04 | 245.04 | 245.04 | 245.04 | 245.04 |
| 370 | 245.04 | 245.04 | 245.04 | 245.04 | 245.04 |
| 375 | 245.04 | 245.04 | 245.04 | 245.04 | 245.04 |
| 380 | 245.04 | 245.04 | 245.04 | 245.04 | 245.04 |
| 385 | 245.04 | 245.04 | 245.04 | 245.04 | 245.04 |
| 390 | 245.04 | 245.04 | 245.04 | 245.04 | 245.04 |
| 395 | 245.04 | 245.04 | 245.04 | 245.04 | 245.04 |
| 400 | 245.04 | 245.04 | 245.04 | 245.04 | 245.04 |

# Basin 3A Drawdown

Subsection: Time vs. Elevation
Label: 1 (OUT)
Scenario: Drawdown

Return Event: 100 years
Storm Event:

**Time vs. Elevation (ft)**

**Output Time increment = 1 min**
**Time on left represents time for first value in each row.**

| Time (min) | Elevation (ft) | Elevation (ft) | Elevation (ft) | Elevation (ft) | Elevation (ft) |
|---|---|---|---|---|---|
| 405 | 245.04 | 245.04 | 245.04 | 245.04 | 245.04 |
| 410 | 245.04 | 245.04 | 245.04 | 245.04 | 245.04 |
| 415 | 245.04 | 245.04 | 245.04 | 245.04 | 245.04 |
| 420 | 245.04 | 245.04 | 245.04 | 245.04 | 245.04 |
| 425 | 245.04 | 245.04 | 245.04 | 245.04 | 245.04 |
| 430 | 245.04 | 245.04 | 245.04 | 245.04 | 245.04 |
| 435 | 245.04 | 245.04 | 245.04 | 245.04 | 245.04 |
| 440 | 245.04 | 245.04 | 245.04 | 245.04 | 245.04 |
| 445 | 245.04 | 245.04 | 245.04 | 245.04 | 245.04 |
| 450 | 245.04 | 245.04 | 245.04 | 245.04 | 245.04 |
| 455 | 245.04 | 245.04 | 245.04 | 245.04 | 245.04 |
| 460 | 245.04 | 245.04 | 245.04 | 245.04 | 245.04 |
| 465 | 245.04 | 245.04 | 245.04 | 245.04 | 245.04 |
| 470 | 245.04 | 245.04 | 245.04 | 245.04 | 245.04 |
| 475 | 245.04 | 245.04 | 245.04 | 245.04 | 245.04 |
| 480 | 245.04 | 245.04 | 245.04 | 245.04 | 245.04 |
| 485 | 245.04 | 245.04 | 245.04 | 245.04 | 245.04 |
| 490 | 245.04 | 245.04 | 245.04 | 245.04 | 245.04 |
| 495 | 245.04 | 245.04 | 245.04 | 245.04 | 245.04 |
| 500 | 245.04 | 245.04 | 245.04 | 245.04 | 245.04 |
| 505 | 245.04 | 245.04 | 245.04 | 245.04 | 245.04 |
| 510 | 245.04 | 245.04 | 245.04 | 245.04 | 245.04 |
| 515 | 245.04 | 245.04 | 245.04 | 245.04 | 245.04 |
| 520 | 245.04 | 245.04 | 245.04 | 245.04 | 245.04 |
| 525 | 245.04 | 245.04 | 245.04 | 245.04 | 245.04 |
| 530 | 245.04 | 245.04 | 245.04 | 245.04 | 245.04 |
| 535 | 245.04 | 245.04 | 245.04 | 245.04 | 245.04 |
| 540 | 245.04 | 245.04 | 245.04 | 245.04 | 245.04 |
| 545 | 245.04 | 245.04 | 245.04 | 245.04 | 245.04 |
| 550 | 245.04 | 245.04 | 245.04 | 245.04 | 245.04 |
| 555 | 245.04 | 245.04 | 245.04 | 245.04 | 245.04 |
| 560 | 245.04 | 245.04 | 245.04 | 245.04 | 245.04 |
| 565 | 245.04 | 245.04 | 245.04 | 245.04 | 245.04 |
| 570 | 245.04 | 245.04 | 245.04 | 245.04 | 245.04 |
| 575 | 245.04 | 245.04 | 245.04 | 245.04 | 245.04 |
| 580 | 245.04 | 245.04 | 245.04 | 245.04 | 245.04 |
| 585 | 245.04 | 245.04 | 245.04 | 245.04 | 245.04 |
| 590 | 245.04 | 245.04 | 245.04 | 245.04 | 245.04 |
| 595 | 245.04 | 245.04 | 245.04 | 245.04 | 245.04 |
| 600 | 245.04 | 245.04 | 245.04 | 245.04 | 245.04 |
| 605 | 245.04 | 245.04 | 245.04 | 245.04 | 245.04 |

# Basin 3A Drawdown

Subsection: Time vs. Elevation
Label: 1 (OUT)
Scenario: Drawdown

Return Event: 100 years
Storm Event:

**Time vs. Elevation (ft)**

**Output Time increment = 1 min**
**Time on left represents time for first value in each row.**

| Time (min) | Elevation (ft) | Elevation (ft) | Elevation (ft) | Elevation (ft) | Elevation (ft) |
|---|---|---|---|---|---|
| 610 | 245.04 | 245.04 | 245.04 | 245.04 | 245.04 |
| 615 | 245.04 | 245.04 | 245.04 | 245.04 | 245.04 |
| 620 | 245.04 | 245.04 | 245.04 | 245.04 | 245.04 |
| 625 | 245.04 | 245.04 | 245.04 | 245.04 | 245.04 |
| 630 | 245.04 | 245.04 | 245.04 | 245.04 | 245.04 |
| 635 | 245.04 | 245.04 | 245.04 | 245.04 | 245.04 |
| 640 | 245.04 | 245.04 | 245.04 | 245.04 | 245.04 |
| 645 | 245.04 | 245.04 | 245.04 | 245.04 | 245.04 |
| 650 | 245.04 | 245.04 | 245.04 | 245.04 | 245.04 |
| 655 | 245.04 | 245.04 | 245.04 | 245.04 | 245.04 |
| 660 | 245.04 | 245.04 | 245.04 | 245.04 | 245.04 |
| 665 | 245.04 | 245.04 | 245.04 | 245.04 | 245.04 |
| 670 | 245.04 | 245.04 | 245.04 | 245.04 | 245.04 |
| 675 | 245.04 | 245.04 | 245.04 | 245.04 | 245.04 |
| 680 | 245.04 | 245.04 | 245.04 | 245.04 | 245.04 |
| 685 | 245.04 | 245.04 | 245.04 | 245.04 | 245.04 |
| 690 | 245.04 | 245.04 | 245.04 | 245.04 | 245.04 |
| 695 | 245.04 | 245.04 | 245.04 | 245.04 | 245.04 |
| 700 | 245.04 | 245.04 | 245.04 | 245.04 | 245.04 |
| 705 | 245.04 | 245.04 | 245.04 | 245.04 | 245.04 |
| 710 | 245.04 | 245.04 | 245.04 | 245.04 | 245.04 |
| 715 | 245.04 | 245.04 | 245.04 | 245.04 | 245.04 |
| 720 | 245.04 | 245.04 | 245.04 | 245.04 | 245.04 |
| 725 | 245.04 | 245.04 | 245.04 | 245.04 | 245.04 |
| 730 | 245.04 | 245.04 | 245.04 | 245.04 | 245.04 |
| 735 | 245.04 | 245.04 | 245.04 | 245.04 | 245.04 |
| 740 | 245.04 | 245.04 | 245.04 | 245.04 | 245.04 |
| 745 | 245.04 | 245.04 | 245.04 | 245.04 | 245.04 |
| 750 | 245.04 | 245.04 | 245.04 | 245.04 | 245.04 |
| 755 | 245.04 | 245.04 | 245.04 | 245.04 | 245.04 |
| 760 | 245.04 | 245.04 | 245.04 | 245.04 | 245.04 |
| 765 | 245.04 | 245.04 | 245.04 | 245.04 | 245.04 |
| 770 | 245.04 | 245.04 | 245.04 | 245.04 | 245.04 |
| 775 | 245.04 | 245.04 | 245.04 | 245.04 | 245.04 |
| 780 | 245.04 | 245.04 | 245.04 | 245.04 | 245.04 |
| 785 | 245.04 | 245.04 | 245.04 | 245.04 | 245.04 |
| 790 | 245.04 | 245.04 | 245.04 | 245.04 | 245.04 |
| 795 | 245.04 | 245.04 | 245.04 | 245.04 | 245.04 |
| 800 | 245.04 | 245.04 | 245.04 | 245.04 | 245.04 |
| 805 | 245.04 | 245.04 | 245.04 | 245.04 | 245.04 |
| 810 | 245.04 | 245.04 | 245.04 | 245.04 | 245.04 |

# Basin 3A Drawdown

Subsection: Time vs. Elevation
Label: 1 (OUT)
Scenario: Drawdown

Return Event: 100 years
Storm Event:

**Time vs. Elevation (ft)**

**Output Time increment = 1 min**
**Time on left represents time for first value in each row.**

| Time (min) | Elevation (ft) | Elevation (ft) | Elevation (ft) | Elevation (ft) | Elevation (ft) |
|---|---|---|---|---|---|
| 815 | 245.04 | 245.04 | 245.04 | 245.04 | 245.04 |
| 820 | 245.04 | 245.04 | 245.04 | 245.04 | 245.04 |
| 825 | 245.04 | 245.04 | 245.04 | 245.04 | 245.04 |
| 830 | 245.04 | 245.04 | 245.04 | 245.04 | 245.04 |
| 835 | 245.04 | 245.04 | 245.04 | 245.04 | 245.04 |
| 840 | 245.04 | 245.04 | 245.04 | 245.04 | 245.04 |
| 845 | 245.04 | 245.04 | 245.04 | 245.04 | 245.04 |
| 850 | 245.04 | 245.04 | 245.04 | 245.04 | 245.04 |
| 855 | 245.04 | 245.04 | 245.04 | 245.04 | 245.04 |
| 860 | 245.04 | 245.04 | 245.04 | 245.04 | 245.04 |
| 865 | 245.04 | 245.04 | 245.04 | 245.04 | 245.04 |
| 870 | 245.04 | 245.04 | 245.04 | 245.04 | 245.04 |
| 875 | 245.04 | 245.04 | 245.04 | 245.04 | 245.04 |
| 880 | 245.04 | 245.04 | 245.04 | 245.04 | 245.04 |
| 885 | 245.04 | 245.04 | 245.04 | 245.04 | 245.04 |
| 890 | 245.04 | 245.04 | 245.04 | 245.04 | 245.04 |
| 895 | 245.04 | 245.04 | 245.04 | 245.04 | 245.04 |
| 900 | 245.04 | 245.04 | 245.04 | 245.04 | 245.04 |
| 905 | 245.04 | 245.04 | 245.04 | 245.04 | 245.04 |
| 910 | 245.04 | 245.04 | 245.04 | 245.04 | 245.04 |
| 915 | 245.04 | 245.04 | 245.04 | 245.04 | 245.04 |
| 920 | 245.04 | 245.04 | 245.04 | 245.04 | 245.04 |
| 925 | 245.04 | 245.04 | 245.04 | 245.04 | 245.04 |
| 930 | 245.04 | 245.04 | 245.04 | 245.04 | 245.04 |
| 935 | 245.04 | 245.04 | 245.04 | 245.04 | 245.04 |
| 940 | 245.04 | 245.04 | 245.04 | 245.04 | 245.04 |
| 945 | 245.04 | 245.04 | 245.04 | 245.04 | 245.04 |
| 950 | 245.04 | 245.04 | 245.04 | 245.04 | 245.04 |
| 955 | 245.04 | 245.04 | 245.04 | 245.04 | 245.04 |
| 960 | 245.04 | 245.04 | 245.04 | 245.04 | 245.04 |
| 965 | 245.04 | 245.04 | 245.04 | 245.04 | 245.04 |
| 970 | 245.04 | 245.04 | 245.04 | 245.04 | 245.04 |
| 975 | 245.04 | 245.04 | 245.04 | 245.04 | 245.04 |
| 980 | 245.04 | 245.04 | 245.04 | 245.04 | 245.04 |
| 985 | 245.04 | 245.04 | 245.04 | 245.04 | 245.04 |
| 990 | 245.04 | 245.04 | 245.04 | 245.04 | 245.04 |
| 995 | 245.04 | 245.04 | 245.04 | 245.04 | 245.04 |
| 1,000 | 245.04 | 245.04 | 245.04 | 245.04 | 245.04 |
| 1,005 | 245.04 | 245.04 | 245.04 | 245.04 | 245.04 |
| 1,010 | 245.04 | 245.04 | 245.04 | 245.04 | 245.04 |
| 1,015 | 245.04 | 245.04 | 245.04 | 245.04 | 245.04 |

# Basin 3A Drawdown

Subsection: Time vs. Elevation
Label: 1 (OUT)
Scenario: Drawdown

Return Event: 100 years
Storm Event:

**Time vs. Elevation (ft)**

**Output Time increment = 1 min**
**Time on left represents time for first value in each row.**

| Time (min) | Elevation (ft) | Elevation (ft) | Elevation (ft) | Elevation (ft) | Elevation (ft) |
|---|---|---|---|---|---|
| 1,020 | 245.04 | 245.04 | 245.04 | 245.04 | 245.04 |
| 1,025 | 245.04 | 245.04 | 245.04 | 245.04 | 245.04 |
| 1,030 | 245.04 | 245.04 | 245.04 | 245.04 | 245.04 |
| 1,035 | 245.04 | 245.04 | 245.04 | 245.04 | 245.04 |
| 1,040 | 245.04 | 245.04 | 245.04 | 245.04 | 245.04 |
| 1,045 | 245.04 | 245.04 | 245.04 | 245.04 | 245.04 |
| 1,050 | 245.04 | 245.04 | 245.04 | 245.04 | 245.04 |
| 1,055 | 245.04 | 245.04 | 245.04 | 245.04 | 245.04 |
| 1,060 | 245.04 | 245.04 | 245.04 | 245.04 | 245.04 |
| 1,065 | 245.04 | 245.04 | 245.04 | 245.04 | 245.04 |
| 1,070 | 245.04 | 245.04 | 245.04 | 245.04 | 245.04 |
| 1,075 | 245.04 | 245.04 | 245.04 | 245.04 | 245.04 |
| 1,080 | 245.04 | 245.04 | 245.04 | 245.04 | 245.04 |
| 1,085 | 245.04 | 245.04 | 245.04 | 245.04 | 245.04 |
| 1,090 | 245.04 | 245.04 | 245.04 | 245.04 | 245.04 |
| 1,095 | 245.04 | 245.04 | 245.04 | 245.04 | 245.04 |
| 1,100 | 245.04 | 245.04 | 245.04 | 245.04 | 245.04 |
| 1,105 | 245.04 | 245.04 | 245.04 | 245.04 | 245.04 |
| 1,110 | 245.04 | 245.04 | 245.04 | 245.04 | 245.04 |
| 1,115 | 245.04 | 245.04 | 245.04 | 245.04 | 245.04 |
| 1,120 | 245.04 | 245.04 | 245.04 | 245.04 | 245.04 |
| 1,125 | 245.04 | 245.04 | 245.04 | 245.04 | 245.04 |
| 1,130 | 245.04 | 245.04 | 245.04 | 245.04 | 245.04 |
| 1,135 | 245.04 | 245.04 | 245.04 | 245.04 | 245.04 |
| 1,140 | 245.04 | 245.04 | 245.04 | 245.04 | 245.04 |
| 1,145 | 245.04 | 245.04 | 245.04 | 245.04 | 245.04 |
| 1,150 | 245.04 | 245.04 | 245.04 | 245.04 | 245.04 |
| 1,155 | 245.04 | 245.04 | 245.04 | 245.04 | 245.04 |
| 1,160 | 245.04 | 245.04 | 245.04 | 245.04 | 245.04 |
| 1,165 | 245.04 | 245.04 | 245.04 | 245.04 | 245.04 |
| 1,170 | 245.04 | 245.04 | 245.04 | 245.04 | 245.04 |
| 1,175 | 245.04 | 245.04 | 245.04 | 245.04 | 245.04 |
| 1,180 | 245.04 | 245.04 | 245.04 | 245.04 | 245.04 |
| 1,185 | 245.04 | 245.04 | 245.04 | 245.04 | 245.04 |
| 1,190 | 245.04 | 245.04 | 245.04 | 245.04 | 245.04 |
| 1,195 | 245.04 | 245.04 | 245.04 | 245.04 | 245.04 |
| 1,200 | 245.04 | 245.04 | 245.04 | 245.04 | 245.04 |
| 1,205 | 245.04 | 245.04 | 245.04 | 245.04 | 245.04 |
| 1,210 | 245.04 | 245.04 | 245.04 | 245.04 | 245.04 |
| 1,215 | 245.04 | 245.04 | 245.04 | 245.04 | 245.04 |
| 1,220 | 245.04 | 245.04 | 245.04 | 245.04 | 245.04 |

# Basin 3A Drawdown

Subsection: Time vs. Elevation
Label: 1 (OUT)
Scenario: Drawdown

Return Event: 100 years
Storm Event:

**Time vs. Elevation (ft)**

**Output Time increment = 1 min**
**Time on left represents time for first value in each row.**

| Time (min) | Elevation (ft) | Elevation (ft) | Elevation (ft) | Elevation (ft) | Elevation (ft) |
|---|---|---|---|---|---|
| 1,225 | 245.04 | 245.04 | 245.04 | 245.04 | 245.04 |
| 1,230 | 245.04 | 245.04 | 245.04 | 245.04 | 245.04 |
| 1,235 | 245.04 | 245.04 | 245.04 | 245.04 | 245.04 |
| 1,240 | 245.04 | 245.04 | 245.04 | 245.04 | 245.04 |
| 1,245 | 245.04 | 245.04 | 245.04 | 245.04 | 245.04 |
| 1,250 | 245.04 | 245.04 | 245.04 | 245.04 | 245.04 |
| 1,255 | 245.04 | 245.04 | 245.04 | 245.04 | 245.04 |
| 1,260 | 245.04 | 245.04 | 245.04 | 245.04 | 245.04 |
| 1,265 | 245.04 | 245.04 | 245.04 | 245.04 | 245.04 |
| 1,270 | 245.04 | 245.04 | 245.04 | 245.04 | 245.04 |
| 1,275 | 245.04 | 245.04 | 245.04 | 245.04 | 245.04 |
| 1,280 | 245.04 | 245.04 | 245.04 | 245.04 | 245.04 |
| 1,285 | 245.04 | 245.04 | 245.04 | 245.04 | 245.04 |
| 1,290 | 245.04 | 245.04 | 245.04 | 245.04 | 245.04 |
| 1,295 | 245.04 | 245.04 | 245.04 | 245.04 | 245.04 |
| 1,300 | 245.04 | 245.04 | 245.04 | 245.04 | 245.04 |
| 1,305 | 245.04 | 245.04 | 245.04 | 245.04 | 245.04 |
| 1,310 | 245.04 | 245.04 | 245.04 | 245.04 | 245.04 |
| 1,315 | 245.04 | 245.04 | 245.04 | 245.04 | 245.04 |
| 1,320 | 245.04 | 245.04 | 245.04 | 245.04 | 245.04 |
| 1,325 | 245.04 | 245.04 | 245.04 | 245.04 | 245.04 |
| 1,330 | 245.04 | 245.04 | 245.04 | 245.04 | 245.04 |
| 1,335 | 245.04 | 245.04 | 245.04 | 245.04 | 245.04 |
| 1,340 | 245.04 | 245.04 | 245.04 | 245.04 | 245.04 |
| 1,345 | 245.04 | 245.04 | 245.04 | 245.04 | 245.04 |
| 1,350 | 245.04 | 245.04 | 245.04 | 245.04 | 245.04 |
| 1,355 | 245.04 | 245.04 | 245.04 | 245.04 | 245.04 |
| 1,360 | 245.04 | 245.04 | 245.04 | 245.04 | 245.04 |
| 1,365 | 245.04 | 245.04 | 245.04 | 245.04 | 245.04 |
| 1,370 | 245.04 | 245.04 | 245.04 | 245.04 | 245.04 |
| 1,375 | 245.04 | 245.04 | 245.04 | 245.04 | 245.04 |
| 1,380 | 245.04 | 245.04 | 245.04 | 245.04 | 245.04 |
| 1,385 | 245.04 | 245.04 | 245.04 | 245.04 | 245.04 |
| 1,390 | 245.04 | 245.04 | 245.04 | 245.04 | 245.04 |
| 1,395 | 245.04 | 245.04 | 245.04 | 245.04 | 245.04 |
| 1,400 | 245.04 | 245.04 | 245.04 | 245.04 | 245.04 |
| 1,405 | 245.04 | 245.04 | 245.04 | 245.04 | 245.04 |
| 1,410 | 245.04 | 245.04 | 245.04 | 245.04 | 245.04 |
| 1,415 | 245.04 | 245.04 | 245.04 | 245.04 | 245.04 |
| 1,420 | 245.04 | 245.04 | 245.04 | 245.04 | 245.04 |
| 1,425 | 245.04 | 245.04 | 245.04 | 245.04 | 245.04 |

# Basin 3A Drawdown

Subsection: Time vs. Elevation
Label: 1 (OUT)
Scenario: Drawdown

Return Event: 100 years
Storm Event:

**Time vs. Elevation (ft)**

**Output Time increment = 1 min**
**Time on left represents time for first value in each row.**

| Time (min) | Elevation (ft) | Elevation (ft) | Elevation (ft) | Elevation (ft) | Elevation (ft) |
|---|---|---|---|---|---|
| 1,430 | 245.04 | 245.04 | 245.04 | 245.04 | 245.04 |
| 1,435 | 245.04 | 245.04 | 245.04 | 245.04 | 245.04 |
| 1,440 | 245.04 | 245.04 | 245.04 | 245.04 | 245.04 |
| 1,445 | 245.04 | 245.04 | 245.04 | 245.04 | 245.04 |
| 1,450 | 245.04 | 245.04 | 245.04 | 245.04 | 245.04 |
| 1,455 | 245.04 | 245.04 | 245.04 | 245.04 | 245.04 |
| 1,460 | 245.04 | 245.04 | 245.04 | 245.04 | 245.04 |
| 1,465 | 245.04 | 245.04 | 245.04 | 245.04 | 245.04 |
| 1,470 | 245.04 | 245.04 | 245.04 | 245.04 | 245.04 |
| 1,475 | 245.04 | 245.04 | 245.04 | 245.04 | 245.04 |
| 1,480 | 245.04 | 245.04 | 245.04 | 245.04 | 245.04 |
| 1,485 | 245.04 | 245.04 | 245.04 | 245.04 | 245.04 |
| 1,490 | 245.04 | 245.04 | 245.04 | 245.04 | 245.04 |
| 1,495 | 245.04 | 245.04 | 245.04 | 245.04 | 245.04 |
| 1,500 | 245.04 | 245.04 | 245.04 | 245.04 | 245.04 |
| 1,505 | 245.04 | 245.04 | 245.04 | 245.04 | 245.04 |
| 1,510 | 245.04 | 245.04 | 245.04 | 245.04 | 245.04 |
| 1,515 | 245.04 | 245.04 | 245.04 | 245.04 | 245.04 |
| 1,520 | 245.04 | 245.04 | 245.04 | 245.04 | 245.04 |
| 1,525 | 245.04 | 245.04 | 245.04 | 245.04 | 245.04 |
| 1,530 | 245.04 | 245.04 | 245.04 | 245.04 | 245.04 |
| 1,535 | 245.04 | 245.04 | 245.04 | 245.04 | 245.04 |
| 1,540 | 245.04 | 245.04 | 245.04 | 245.04 | 245.04 |
| 1,545 | 245.04 | 245.04 | 245.04 | 245.04 | 245.04 |
| 1,550 | 245.04 | 245.04 | 245.04 | 245.04 | 245.04 |
| 1,555 | 245.04 | 245.04 | 245.04 | 245.04 | 245.04 |
| 1,560 | 245.04 | 245.04 | 245.04 | 245.04 | 245.04 |
| 1,565 | 245.04 | 245.04 | 245.04 | 245.04 | 245.04 |
| 1,570 | 245.04 | 245.04 | 245.04 | 245.04 | 245.04 |
| 1,575 | 245.04 | 245.04 | 245.04 | 245.04 | 245.04 |
| 1,580 | 245.04 | 245.04 | 245.04 | 245.04 | 245.04 |
| 1,585 | 245.04 | 245.04 | 245.04 | 245.04 | 245.04 |
| 1,590 | 245.04 | 245.04 | 245.04 | 245.04 | 245.04 |
| 1,595 | 245.04 | 245.04 | 245.04 | 245.04 | 245.04 |
| 1,600 | 245.04 | 245.04 | 245.04 | 245.04 | 245.04 |
| 1,605 | 245.04 | 245.04 | 245.04 | 245.04 | 245.04 |
| 1,610 | 245.04 | 245.04 | 245.04 | 245.04 | 245.04 |
| 1,615 | 245.04 | 245.04 | 245.04 | 245.04 | 245.04 |
| 1,620 | 245.04 | 245.04 | 245.04 | 245.04 | 245.04 |
| 1,625 | 245.04 | 245.04 | 245.04 | 245.04 | 245.04 |
| 1,630 | 245.04 | 245.04 | 245.04 | 245.04 | 245.04 |

# Basin 3A Drawdown

Subsection: Time vs. Elevation
Label: 1 (OUT)
Scenario: Drawdown

Return Event: 100 years
Storm Event:

**Time vs. Elevation (ft)**

**Output Time increment = 1 min**
**Time on left represents time for first value in each row.**

| Time (min) | Elevation (ft) | Elevation (ft) | Elevation (ft) | Elevation (ft) | Elevation (ft) |
|---|---|---|---|---|---|
| 1,635 | 245.04 | 245.04 | 245.04 | 245.04 | 245.04 |
| 1,640 | 245.04 | 245.04 | 245.04 | 245.04 | 245.04 |
| 1,645 | 245.04 | 245.04 | 245.04 | 245.04 | 245.04 |
| 1,650 | 245.04 | 245.04 | 245.04 | 245.04 | 245.04 |
| 1,655 | 245.04 | 245.04 | 245.04 | 245.04 | 245.04 |
| 1,660 | 245.04 | 245.04 | 245.04 | 245.04 | 245.04 |
| 1,665 | 245.04 | 245.04 | 245.04 | 245.04 | 245.04 |
| 1,670 | 245.04 | 245.04 | 245.04 | 245.04 | 245.04 |
| 1,675 | 245.04 | 245.04 | 245.04 | 245.04 | 245.04 |
| 1,680 | 245.04 | 245.04 | 245.04 | 245.04 | 245.04 |
| 1,685 | 245.04 | 245.04 | 245.04 | 245.04 | 245.04 |
| 1,690 | 245.04 | 245.04 | 245.04 | 245.04 | 245.04 |
| 1,695 | 245.04 | 245.04 | 245.04 | 245.04 | 245.04 |
| 1,700 | 245.04 | 245.04 | 245.04 | 245.04 | 245.04 |
| 1,705 | 245.04 | 245.04 | 245.04 | 245.04 | 245.04 |
| 1,710 | 245.04 | 245.04 | 245.04 | 245.04 | 245.04 |
| 1,715 | 245.04 | 245.04 | 245.04 | 245.04 | 245.04 |
| 1,720 | 245.04 | 245.04 | 245.04 | 245.04 | 245.04 |
| 1,725 | 245.04 | 245.04 | 245.04 | 245.04 | 245.04 |
| 1,730 | 245.04 | 245.04 | 245.04 | 245.04 | 245.04 |
| 1,735 | 245.04 | 245.04 | 245.04 | 245.04 | 245.04 |
| 1,740 | 245.04 | 245.04 | 245.04 | 245.04 | 245.04 |
| 1,745 | 245.04 | 245.04 | 245.04 | 245.04 | 245.04 |
| 1,750 | 245.04 | 245.04 | 245.04 | 245.04 | 245.04 |
| 1,755 | 245.04 | 245.04 | 245.04 | 245.04 | 245.04 |
| 1,760 | 245.04 | 245.04 | 245.04 | 245.04 | 245.04 |
| 1,765 | 245.04 | 245.04 | 245.04 | 245.04 | 245.04 |
| 1,770 | 245.04 | 245.04 | 245.04 | 245.04 | 245.04 |
| 1,775 | 245.04 | 245.04 | 245.04 | 245.04 | 245.04 |
| 1,780 | 245.04 | 245.04 | 245.04 | 245.04 | 245.04 |
| 1,785 | 245.04 | 245.04 | 245.04 | 245.04 | 245.04 |
| 1,790 | 245.04 | 245.04 | 245.04 | 245.04 | 245.04 |
| 1,795 | 245.04 | 245.04 | 245.04 | 245.04 | 245.04 |
| 1,800 | 245.04 | 245.04 | 245.04 | 245.04 | 245.04 |
| 1,805 | 245.04 | 245.04 | 245.04 | 245.04 | 245.04 |
| 1,810 | 245.04 | 245.04 | 245.04 | 245.04 | 245.04 |
| 1,815 | 245.04 | 245.04 | 245.04 | 245.04 | 245.04 |
| 1,820 | 245.04 | 245.04 | 245.04 | 245.04 | 245.04 |
| 1,825 | 245.04 | 245.04 | 245.04 | 245.04 | 245.04 |
| 1,830 | 245.04 | 245.04 | 245.04 | 245.04 | 245.04 |
| 1,835 | 245.04 | 245.04 | 245.04 | 245.04 | 245.04 |

# Basin 3A Drawdown

Subsection: Time vs. Elevation
Label: 1 (OUT)
Scenario: Drawdown

Return Event: 100 years
Storm Event:

**Time vs. Elevation (ft)**

**Output Time increment = 1 min**
**Time on left represents time for first value in each row.**

| Time (min) | Elevation (ft) | Elevation (ft) | Elevation (ft) | Elevation (ft) | Elevation (ft) |
|---|---|---|---|---|---|
| 1,840 | 245.04 | 245.04 | 245.04 | 245.04 | 245.04 |
| 1,845 | 245.04 | 245.04 | 245.04 | 245.04 | 245.04 |
| 1,850 | 245.04 | 245.04 | 245.04 | 245.04 | 245.04 |
| 1,855 | 245.04 | 245.04 | 245.04 | 245.04 | 245.04 |
| 1,860 | 245.04 | 245.04 | 245.04 | 245.04 | 245.04 |
| 1,865 | 245.04 | 245.04 | 245.04 | 245.04 | 245.04 |
| 1,870 | 245.04 | 245.04 | 245.04 | 245.04 | 245.04 |
| 1,875 | 245.04 | 245.04 | 245.04 | 245.04 | 245.04 |
| 1,880 | 245.04 | 245.04 | 245.04 | 245.04 | 245.04 |
| 1,885 | 245.04 | 245.04 | 245.04 | 245.04 | 245.04 |
| 1,890 | 245.04 | 245.04 | 245.04 | 245.04 | 245.04 |
| 1,895 | 245.04 | 245.04 | 245.04 | 245.04 | 245.04 |
| 1,900 | 245.04 | 245.04 | 245.04 | 245.04 | 245.04 |
| 1,905 | 245.04 | 245.04 | 245.04 | 245.04 | 245.04 |
| 1,910 | 245.04 | 245.04 | 245.04 | 245.04 | 245.04 |
| 1,915 | 245.04 | 245.04 | 245.04 | 245.04 | 245.04 |
| 1,920 | 245.04 | 245.04 | 245.04 | 245.04 | 245.04 |
| 1,925 | 245.04 | 245.04 | 245.04 | 245.04 | 245.04 |
| 1,930 | 245.04 | 245.04 | 245.04 | 245.04 | 245.04 |
| 1,935 | 245.04 | 245.04 | 245.04 | 245.04 | 245.04 |
| 1,940 | 245.04 | 245.04 | 245.04 | 245.04 | 245.04 |
| 1,945 | 245.04 | 245.04 | 245.04 | 245.04 | 245.04 |
| 1,950 | 245.04 | 245.04 | 245.04 | 245.04 | 245.04 |
| 1,955 | 245.04 | 245.04 | 245.04 | 245.04 | 245.04 |
| 1,960 | 245.04 | 245.04 | 245.04 | 245.04 | 245.04 |
| 1,965 | 245.04 | 245.04 | 245.04 | 245.04 | 245.04 |
| 1,970 | 245.04 | 245.04 | 245.04 | 245.04 | 245.04 |
| 1,975 | 245.04 | 245.04 | 245.04 | 245.04 | 245.04 |
| 1,980 | 245.04 | 245.04 | 245.04 | 245.04 | 245.04 |
| 1,985 | 245.04 | 245.04 | 245.04 | 245.04 | 245.04 |
| 1,990 | 245.04 | 245.04 | 245.04 | 245.04 | 245.04 |
| 1,995 | 245.04 | 245.04 | 245.04 | 245.04 | 245.04 |
| 2,000 | 245.04 | (N/A) | (N/A) | (N/A) | (N/A) |

# Basin 3A Drawdown

Subsection: Outlet Input Data
Label: Outlet#1
Scenario: Drawdown

Return Event: 100 years
Storm Event:

| Requested Pond Water Surface Elevations | |
|---|---|
| Minimum (Headwater) | 245.00 ft |
| Increment (Headwater) | 0.10 ft |
| Maximum (Headwater) | 254.00 ft |

## Outlet Connectivity

| Structure Type | Outlet ID | Direction | Outfall | E1 (ft) | E2 (ft) |
|---|---|---|---|---|---|
| Orifice-Circular | Orifice - LF | Forward | TW | 248.75 | 254.00 |
| Orifice-Circular | Orifice - HF | Forward | TW | 251.00 | 254.00 |
| Inlet Box | Riser - 1 | Forward | TW | 252.30 | 254.00 |
| Orifice-Circular | Orifice - Underdrain | Forward | TW | 245.25 | 254.00 |
| Tailwater Settings | Tailwater | | | (N/A) | (N/A) |

# Basin 3A Drawdown

Subsection: Outlet Input Data
Label: Outlet#1
Scenario: Drawdown

Return Event: 100 years
Storm Event:

| Structure ID: Orifice - LF<br>Structure Type: Orifice-Circular | |
|---|---|
| Number of Openings | 1 |
| Elevation | 248.75 ft |
| Orifice Diameter | 2.0 in |
| Orifice Coefficient | 0.600 |

| Structure ID: Riser - 1<br>Structure Type: Inlet Box | |
|---|---|
| Number of Openings | 1 |
| Elevation | 252.30 ft |
| Orifice Area | 4.7 ft² |
| Orifice Coefficient | 0.600 |
| Weir Length | 9.20 ft |
| Weir Coefficient | 3.00 (ft^0.5)/s |
| K Reverse | 1.000 |
| Manning's n | 0.000 |
| Kev, Charged Riser | 0.000 |
| Weir Submergence | False |
| Orifice H to crest | True |

| Structure ID: Orifice - HF<br>Structure Type: Orifice-Circular | |
|---|---|
| Number of Openings | 2 |
| Elevation | 251.00 ft |
| Orifice Diameter | 6.0 in |
| Orifice Coefficient | 0.600 |

| Structure ID: Orifice - Underdrain<br>Structure Type: Orifice-Circular | |
|---|---|
| Number of Openings | 1 |
| Elevation | 245.25 ft |
| Orifice Diameter | 4.0 in |
| Orifice Coefficient | 0.600 |

| Structure ID: TW<br>Structure Type: TW Setup, DS Channel | |
|---|---|
| Tailwater Type | Free Outfall |

| Convergence Tolerances | |
|---|---|
| Maximum Iterations | 80 |

# Basin 3A Drawdown

Subsection: Outlet Input Data
Label: Outlet#1
Scenario: Drawdown

Return Event: 100 years
Storm Event:

| Convergence Tolerances | |
|---|---|
| Tailwater Tolerance (Minimum) | 0.01 ft |
| Tailwater Tolerance (Maximum) | 0.10 ft |
| Headwater Tolerance (Minimum) | 0.01 ft |
| Headwater Tolerance (Maximum) | 0.10 ft |
| Flow Tolerance (Minimum) | 0.001 ft³/s |
| Flow Tolerance (Maximum) | 10.000 ft³/s |

# Basin 3A Drawdown

Subsection: Elevation-Volume-Flow Table (Pond)
Label: 1
Scenario: Drawdown

Return Event: 100 years
Storm Event:

| Infiltration | |
|---|---|
| Infiltration Method (Computed) | No Infiltration |

| Initial Conditions | |
|---|---|
| Elevation (Water Surface, Initial) | 254.00 ft |
| Volume (Initial) | 0.641 ac-ft |
| Flow (Initial Outlet) | 34.10 ft³/s |
| Flow (Initial Infiltration) | 0.00 ft³/s |
| Flow (Initial, Total) | 34.10 ft³/s |
| Time Increment | 1 min |

| Elevation (ft) | Outflow (ft³/s) | Storage (ac-ft) | Area (ft²) | Infiltration (ft³/s) | Flow (Total) (ft³/s) | 2S/t + O (ft³/s) |
|---|---|---|---|---|---|---|
| 245.00 | 0.00 | 0.000 | 10.000 | 0.00 | 0.00 | 0.00 |
| 245.10 | 0.00 | 0.000 | 10.000 | 0.00 | 0.00 | 0.03 |
| 245.20 | 0.00 | 0.000 | 10.000 | 0.00 | 0.00 | 0.07 |
| 245.25 | 0.00 | 0.000 | 10.000 | 0.00 | 0.00 | 0.08 |
| 245.30 | 0.00 | 0.000 | 10.000 | 0.00 | 0.00 | 0.10 |
| 245.40 | 0.04 | 0.000 | 10.000 | 0.00 | 0.04 | 0.17 |
| 245.50 | 0.10 | 0.000 | 10.000 | 0.00 | 0.10 | 0.27 |
| 245.60 | 0.18 | 0.000 | 10.000 | 0.00 | 0.18 | 0.38 |
| 245.70 | 0.22 | 0.000 | 10.000 | 0.00 | 0.22 | 0.46 |
| 245.80 | 0.26 | 0.000 | 10.000 | 0.00 | 0.26 | 0.53 |
| 245.90 | 0.29 | 0.000 | 10.000 | 0.00 | 0.29 | 0.59 |
| 246.00 | 0.32 | 0.000 | 10.000 | 0.00 | 0.32 | 0.65 |
| 246.10 | 0.35 | 0.000 | 10.000 | 0.00 | 0.35 | 0.71 |
| 246.20 | 0.37 | 0.000 | 10.000 | 0.00 | 0.37 | 0.77 |
| 246.30 | 0.39 | 0.000 | 10.000 | 0.00 | 0.39 | 0.83 |
| 246.40 | 0.42 | 0.000 | 10.000 | 0.00 | 0.42 | 0.88 |
| 246.50 | 0.44 | 0.000 | 10.000 | 0.00 | 0.44 | 0.94 |
| 246.60 | 0.46 | 0.000 | 10.000 | 0.00 | 0.46 | 0.99 |
| 246.70 | 0.48 | 0.000 | 10.000 | 0.00 | 0.48 | 1.04 |
| 246.80 | 0.49 | 0.000 | 10.000 | 0.00 | 0.49 | 1.09 |
| 246.90 | 0.51 | 0.000 | 10.000 | 0.00 | 0.51 | 1.14 |
| 247.00 | 0.53 | 0.000 | 10.000 | 0.00 | 0.53 | 1.20 |
| 247.10 | 0.54 | 0.000 | 10.000 | 0.00 | 0.54 | 1.24 |
| 247.20 | 0.56 | 0.001 | 10.000 | 0.00 | 0.56 | 1.29 |
| 247.30 | 0.58 | 0.001 | 10.000 | 0.00 | 0.58 | 1.34 |
| 247.40 | 0.59 | 0.001 | 10.000 | 0.00 | 0.59 | 1.39 |
| 247.50 | 0.61 | 0.001 | 10.000 | 0.00 | 0.61 | 1.44 |
| 247.60 | 0.62 | 0.001 | 10.000 | 0.00 | 0.62 | 1.49 |
| 247.70 | 0.63 | 0.001 | 10.000 | 0.00 | 0.63 | 1.53 |

# Basin 3A Drawdown

Subsection: Elevation-Volume-Flow Table (Pond) Return Event: 100 years
Label: 1 Storm Event:
Scenario: Drawdown

| Elevation (ft) | Outflow (ft³/s) | Storage (ac-ft) | Area (ft²) | Infiltration (ft³/s) | Flow (Total) (ft³/s) | 2S/t + O (ft³/s) |
|---|---|---|---|---|---|---|
| 247.80 | 0.65 | 0.001 | 10.000 | 0.00 | 0.65 | 1.58 |
| 247.90 | 0.66 | 0.001 | 10.000 | 0.00 | 0.66 | 1.63 |
| 248.00 | 0.68 | 0.001 | 2,422.000 | 0.00 | 0.68 | 1.96 |
| 248.10 | 0.69 | 0.007 | 2,483.561 | 0.00 | 0.69 | 10.15 |
| 248.20 | 0.70 | 0.012 | 2,545.894 | 0.00 | 0.70 | 18.54 |
| 248.30 | 0.71 | 0.018 | 2,609.000 | 0.00 | 0.71 | 27.15 |
| 248.40 | 0.73 | 0.024 | 2,672.878 | 0.00 | 0.73 | 35.96 |
| 248.50 | 0.74 | 0.030 | 2,737.529 | 0.00 | 0.74 | 44.99 |
| 248.60 | 0.75 | 0.037 | 2,802.952 | 0.00 | 0.75 | 54.24 |
| 248.70 | 0.76 | 0.043 | 2,869.148 | 0.00 | 0.76 | 63.70 |
| 248.75 | 0.77 | 0.047 | 2,902.536 | 0.00 | 0.77 | 68.52 |
| 248.80 | 0.78 | 0.050 | 2,936.117 | 0.00 | 0.78 | 73.39 |
| 248.90 | 0.81 | 0.057 | 3,003.858 | 0.00 | 0.81 | 83.32 |
| 249.00 | 0.84 | 0.064 | 3,072.372 | 0.00 | 0.84 | 93.48 |
| 249.10 | 0.86 | 0.071 | 3,141.658 | 0.00 | 0.86 | 103.86 |
| 249.20 | 0.88 | 0.078 | 3,211.717 | 0.00 | 0.88 | 114.47 |
| 249.30 | 0.90 | 0.086 | 3,282.548 | 0.00 | 0.90 | 125.31 |
| 249.40 | 0.92 | 0.093 | 3,354.152 | 0.00 | 0.92 | 136.39 |
| 249.50 | 0.93 | 0.101 | 3,426.529 | 0.00 | 0.93 | 147.71 |
| 249.60 | 0.95 | 0.109 | 3,499.678 | 0.00 | 0.95 | 159.27 |
| 249.70 | 0.97 | 0.117 | 3,573.600 | 0.00 | 0.97 | 171.07 |
| 249.80 | 0.98 | 0.125 | 3,648.294 | 0.00 | 0.98 | 183.12 |
| 249.90 | 1.00 | 0.134 | 3,723.761 | 0.00 | 1.00 | 195.43 |
| 250.00 | 1.01 | 0.143 | 3,800.000 | 0.00 | 1.01 | 207.98 |
| 250.10 | 1.03 | 0.151 | 3,872.493 | 0.00 | 1.03 | 220.78 |
| 250.20 | 1.04 | 0.160 | 3,945.671 | 0.00 | 1.04 | 233.83 |
| 250.30 | 1.06 | 0.169 | 4,019.534 | 0.00 | 1.06 | 247.12 |
| 250.40 | 1.07 | 0.179 | 4,094.083 | 0.00 | 1.07 | 260.65 |
| 250.50 | 1.08 | 0.188 | 4,169.316 | 0.00 | 1.08 | 274.44 |
| 250.60 | 1.10 | 0.198 | 4,245.234 | 0.00 | 1.10 | 288.47 |
| 250.70 | 1.11 | 0.208 | 4,321.837 | 0.00 | 1.11 | 302.77 |
| 250.80 | 1.12 | 0.218 | 4,399.125 | 0.00 | 1.12 | 317.31 |
| 250.90 | 1.13 | 0.228 | 4,477.098 | 0.00 | 1.13 | 332.12 |
| 251.00 | 1.15 | 0.238 | 4,555.755 | 0.00 | 1.15 | 347.19 |
| 251.10 | 1.21 | 0.249 | 4,635.098 | 0.00 | 1.21 | 362.56 |
| 251.20 | 1.35 | 0.260 | 4,715.126 | 0.00 | 1.35 | 378.29 |
| 251.30 | 1.56 | 0.271 | 4,795.839 | 0.00 | 1.56 | 394.35 |
| 251.40 | 1.82 | 0.282 | 4,877.237 | 0.00 | 1.82 | 410.74 |
| 251.50 | 2.15 | 0.293 | 4,959.319 | 0.00 | 2.15 | 427.46 |
| 251.60 | 2.34 | 0.304 | 5,042.087 | 0.00 | 2.34 | 444.31 |
| 251.70 | 2.50 | 0.316 | 5,125.540 | 0.00 | 2.50 | 461.42 |
| 251.80 | 2.64 | 0.328 | 5,209.677 | 0.00 | 2.64 | 478.79 |
| 251.90 | 2.78 | 0.340 | 5,294.500 | 0.00 | 2.78 | 496.43 |

# Basin 3A Drawdown

Subsection: Elevation-Volume-Flow Table (Pond) Return Event: 100 years
Label: 1 Storm Event:
Scenario: Drawdown

| Elevation (ft) | Outflow (ft³/s) | Storage (ac-ft) | Area (ft²) | Infiltration (ft³/s) | Flow (Total) (ft³/s) | 2S/t + O (ft³/s) |
|---|---|---|---|---|---|---|
| 252.00 | 2.90 | 0.352 | 5,380.007 | 0.00 | 2.90 | 514.35 |
| 252.10 | 3.02 | 0.365 | 5,466.200 | 0.00 | 3.02 | 532.54 |
| 252.20 | 3.13 | 0.377 | 5,553.077 | 0.00 | 3.13 | 551.02 |
| 252.30 | 3.23 | 0.390 | 5,640.640 | 0.00 | 3.23 | 569.78 |
| 252.40 | 4.21 | 0.403 | 5,728.887 | 0.00 | 4.21 | 589.70 |
| 252.50 | 5.90 | 0.416 | 5,817.819 | 0.00 | 5.90 | 610.64 |
| 252.60 | 8.06 | 0.430 | 5,907.437 | 0.00 | 8.06 | 632.34 |
| 252.70 | 10.60 | 0.444 | 5,997.739 | 0.00 | 10.60 | 654.72 |
| 252.80 | 13.46 | 0.457 | 6,088.726 | 0.00 | 13.46 | 677.73 |
| 252.90 | 16.62 | 0.472 | 6,180.398 | 0.00 | 16.62 | 701.33 |
| 253.00 | 20.04 | 0.486 | 6,272.755 | 0.00 | 20.04 | 725.50 |
| 253.10 | 23.70 | 0.500 | 6,365.798 | 0.00 | 23.70 | 750.23 |
| 253.20 | 25.49 | 0.515 | 6,459.525 | 0.00 | 25.49 | 773.40 |
| 253.30 | 26.73 | 0.530 | 6,553.937 | 0.00 | 26.73 | 796.32 |
| 253.40 | 27.91 | 0.545 | 6,649.034 | 0.00 | 27.91 | 819.51 |
| 253.50 | 29.04 | 0.561 | 6,744.816 | 0.00 | 29.04 | 842.96 |
| 253.60 | 30.12 | 0.576 | 6,841.283 | 0.00 | 30.12 | 866.69 |
| 253.70 | 31.16 | 0.592 | 6,938.434 | 0.00 | 31.16 | 890.70 |
| 253.80 | 32.17 | 0.608 | 7,036.271 | 0.00 | 32.17 | 915.00 |
| 253.90 | 33.15 | 0.624 | 7,134.793 | 0.00 | 33.15 | 939.59 |
| 254.00 | 34.10 | 0.641 | 7,234.000 | 0.00 | 34.10 | 964.49 |

# Basin 3A Drawdown

## Index

1

1 (Elevation-Volume-Flow Table (Pond))...

1 (Elevation-Volume-Flow Table (Pond), 100 years (Drawdown))...14, 15, 16

1 (OUT) (Time vs. Elevation)...

1 (OUT) (Time vs. Elevation, 100 years (Drawdown))...1, 2, 3, 4, 5, 6, 7, 8, 9, 10

O

Outlet#1 (Outlet Input Data)...

Outlet#1 (Outlet Input Data, 100 years (Drawdown))...11, 12, 13

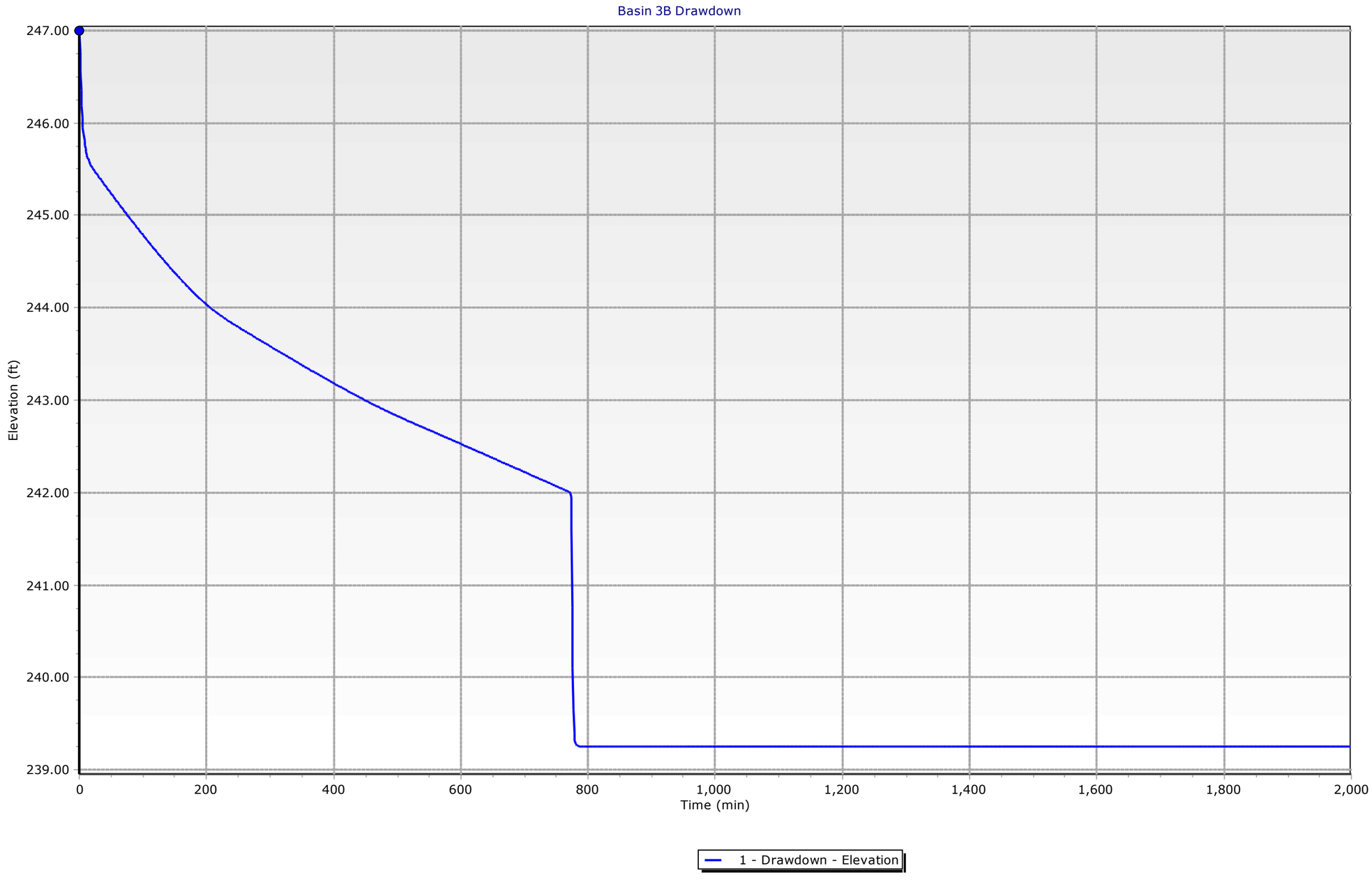
Basin 3B Drawdown
247.00
246.00
245.00
244.00
243.00
242.00
241.00
240.00
239.00
Elevation (ft)
0
200
400
600
800
1,000
1,200
1,400
1,600
1,800
2,000
Time (min)
1 - Drawdown - Elevation

# Table of Contents


| | | |
|---|---|---|
| 1 (OUT) | Time vs. Elevation | 1 |
| Outlet#1 | Outlet Input Data | 11 |
| 1 | Elevation-Volume-Flow Table (Pond) | 14 |

# Basin 3B Drawdown

Subsection: Time vs. Elevation
Label: 1 (OUT)
Scenario: Drawdown

Return Event: 100 years
Storm Event:

**Time vs. Elevation (ft)**

**Output Time increment = 1 min**
**Time on left represents time for first value in each row.**

| Time (min) | Elevation (ft) | Elevation (ft) | Elevation (ft) | Elevation (ft) | Elevation (ft) |
|---|---|---|---|---|---|
| 0 | 247.00 | 246.77 | 246.56 | 246.36 | 246.19 |
| 5 | 246.05 | 245.95 | 245.87 | 245.81 | 245.76 |
| 10 | 245.72 | 245.69 | 245.66 | 245.63 | 245.61 |
| 15 | 245.59 | 245.58 | 245.56 | 245.55 | 245.53 |
| 20 | 245.52 | 245.51 | 245.50 | 245.49 | 245.48 |
| 25 | 245.47 | 245.46 | 245.45 | 245.44 | 245.43 |
| 30 | 245.42 | 245.41 | 245.41 | 245.40 | 245.39 |
| 35 | 245.38 | 245.37 | 245.36 | 245.35 | 245.34 |
| 40 | 245.33 | 245.32 | 245.31 | 245.30 | 245.29 |
| 45 | 245.28 | 245.27 | 245.26 | 245.26 | 245.25 |
| 50 | 245.24 | 245.23 | 245.22 | 245.21 | 245.20 |
| 55 | 245.19 | 245.18 | 245.17 | 245.16 | 245.15 |
| 60 | 245.14 | 245.14 | 245.13 | 245.12 | 245.11 |
| 65 | 245.10 | 245.09 | 245.08 | 245.07 | 245.06 |
| 70 | 245.05 | 245.04 | 245.04 | 245.03 | 245.02 |
| 75 | 245.01 | 245.00 | 244.99 | 244.98 | 244.97 |
| 80 | 244.96 | 244.96 | 244.95 | 244.94 | 244.93 |
| 85 | 244.92 | 244.91 | 244.90 | 244.89 | 244.88 |
| 90 | 244.88 | 244.87 | 244.86 | 244.85 | 244.84 |
| 95 | 244.83 | 244.82 | 244.81 | 244.81 | 244.80 |
| 100 | 244.79 | 244.78 | 244.77 | 244.76 | 244.75 |
| 105 | 244.75 | 244.74 | 244.73 | 244.72 | 244.71 |
| 110 | 244.70 | 244.69 | 244.69 | 244.68 | 244.67 |
| 115 | 244.66 | 244.65 | 244.64 | 244.64 | 244.63 |
| 120 | 244.62 | 244.61 | 244.60 | 244.59 | 244.59 |
| 125 | 244.58 | 244.57 | 244.56 | 244.55 | 244.55 |
| 130 | 244.54 | 244.53 | 244.52 | 244.51 | 244.50 |
| 135 | 244.50 | 244.49 | 244.48 | 244.47 | 244.46 |
| 140 | 244.46 | 244.45 | 244.44 | 244.43 | 244.43 |
| 145 | 244.42 | 244.41 | 244.40 | 244.39 | 244.39 |
| 150 | 244.38 | 244.37 | 244.36 | 244.36 | 244.35 |
| 155 | 244.34 | 244.33 | 244.33 | 244.32 | 244.31 |
| 160 | 244.30 | 244.30 | 244.29 | 244.28 | 244.27 |
| 165 | 244.27 | 244.26 | 244.25 | 244.25 | 244.24 |
| 170 | 244.23 | 244.22 | 244.22 | 244.21 | 244.20 |
| 175 | 244.20 | 244.19 | 244.18 | 244.18 | 244.17 |
| 180 | 244.16 | 244.16 | 244.15 | 244.14 | 244.13 |
| 185 | 244.13 | 244.12 | 244.12 | 244.11 | 244.10 |
| 190 | 244.10 | 244.09 | 244.08 | 244.08 | 244.07 |
| 195 | 244.06 | 244.06 | 244.05 | 244.05 | 244.04 |

# Basin 3B Drawdown

Subsection: Time vs. Elevation
Label: 1 (OUT)
Scenario: Drawdown

Return Event: 100 years
Storm Event:

**Time vs. Elevation (ft)**

**Output Time increment = 1 min**
**Time on left represents time for first value in each row.**

| Time (min) | Elevation (ft) | Elevation (ft) | Elevation (ft) | Elevation (ft) | Elevation (ft) |
|---|---|---|---|---|---|
| 200 | 244.03 | 244.03 | 244.02 | 244.02 | 244.01 |
| 205 | 244.01 | 244.00 | 243.99 | 243.99 | 243.98 |
| 210 | 243.98 | 243.97 | 243.97 | 243.96 | 243.96 |
| 215 | 243.95 | 243.95 | 243.94 | 243.94 | 243.93 |
| 220 | 243.93 | 243.92 | 243.92 | 243.91 | 243.91 |
| 225 | 243.90 | 243.90 | 243.89 | 243.89 | 243.88 |
| 230 | 243.88 | 243.87 | 243.87 | 243.87 | 243.86 |
| 235 | 243.86 | 243.85 | 243.85 | 243.84 | 243.84 |
| 240 | 243.83 | 243.83 | 243.83 | 243.82 | 243.82 |
| 245 | 243.81 | 243.81 | 243.80 | 243.80 | 243.80 |
| 250 | 243.79 | 243.79 | 243.78 | 243.78 | 243.77 |
| 255 | 243.77 | 243.77 | 243.76 | 243.76 | 243.75 |
| 260 | 243.75 | 243.74 | 243.74 | 243.74 | 243.73 |
| 265 | 243.73 | 243.72 | 243.72 | 243.72 | 243.71 |
| 270 | 243.71 | 243.70 | 243.70 | 243.69 | 243.69 |
| 275 | 243.69 | 243.68 | 243.68 | 243.67 | 243.67 |
| 280 | 243.67 | 243.66 | 243.66 | 243.65 | 243.65 |
| 285 | 243.64 | 243.64 | 243.64 | 243.63 | 243.63 |
| 290 | 243.62 | 243.62 | 243.62 | 243.61 | 243.61 |
| 295 | 243.60 | 243.60 | 243.60 | 243.59 | 243.59 |
| 300 | 243.58 | 243.58 | 243.57 | 243.57 | 243.57 |
| 305 | 243.56 | 243.56 | 243.55 | 243.55 | 243.55 |
| 310 | 243.54 | 243.54 | 243.53 | 243.53 | 243.53 |
| 315 | 243.52 | 243.52 | 243.51 | 243.51 | 243.51 |
| 320 | 243.50 | 243.50 | 243.49 | 243.49 | 243.48 |
| 325 | 243.48 | 243.48 | 243.47 | 243.47 | 243.46 |
| 330 | 243.46 | 243.46 | 243.45 | 243.45 | 243.44 |
| 335 | 243.44 | 243.44 | 243.43 | 243.43 | 243.42 |
| 340 | 243.42 | 243.42 | 243.41 | 243.41 | 243.40 |
| 345 | 243.40 | 243.40 | 243.39 | 243.39 | 243.38 |
| 350 | 243.38 | 243.38 | 243.37 | 243.37 | 243.36 |
| 355 | 243.36 | 243.36 | 243.35 | 243.35 | 243.34 |
| 360 | 243.34 | 243.34 | 243.33 | 243.33 | 243.32 |
| 365 | 243.32 | 243.32 | 243.31 | 243.31 | 243.30 |
| 370 | 243.30 | 243.30 | 243.29 | 243.29 | 243.28 |
| 375 | 243.28 | 243.28 | 243.27 | 243.27 | 243.27 |
| 380 | 243.26 | 243.26 | 243.25 | 243.25 | 243.25 |
| 385 | 243.24 | 243.24 | 243.23 | 243.23 | 243.23 |
| 390 | 243.22 | 243.22 | 243.21 | 243.21 | 243.21 |
| 395 | 243.20 | 243.20 | 243.20 | 243.19 | 243.19 |
| 400 | 243.18 | 243.18 | 243.18 | 243.17 | 243.17 |

# Basin 3B Drawdown

Subsection: Time vs. Elevation
Label: 1 (OUT)
Scenario: Drawdown

Return Event: 100 years
Storm Event:

## Time vs. Elevation (ft)

**Output Time increment = 1 min**
**Time on left represents time for first value in each row.**

| Time (min) | Elevation (ft) | Elevation (ft) | Elevation (ft) | Elevation (ft) | Elevation (ft) |
|---|---|---|---|---|---|
| 405 | 243.16 | 243.16 | 243.16 | 243.15 | 243.15 |
| 410 | 243.15 | 243.14 | 243.14 | 243.13 | 243.13 |
| 415 | 243.13 | 243.12 | 243.12 | 243.12 | 243.11 |
| 420 | 243.11 | 243.10 | 243.10 | 243.10 | 243.09 |
| 425 | 243.09 | 243.09 | 243.08 | 243.08 | 243.07 |
| 430 | 243.07 | 243.07 | 243.06 | 243.06 | 243.06 |
| 435 | 243.05 | 243.05 | 243.04 | 243.04 | 243.04 |
| 440 | 243.03 | 243.03 | 243.03 | 243.02 | 243.02 |
| 445 | 243.02 | 243.01 | 243.01 | 243.00 | 243.00 |
| 450 | 243.00 | 242.99 | 242.99 | 242.99 | 242.98 |
| 455 | 242.98 | 242.98 | 242.97 | 242.97 | 242.96 |
| 460 | 242.96 | 242.96 | 242.95 | 242.95 | 242.95 |
| 465 | 242.94 | 242.94 | 242.94 | 242.93 | 242.93 |
| 470 | 242.93 | 242.92 | 242.92 | 242.92 | 242.91 |
| 475 | 242.91 | 242.91 | 242.90 | 242.90 | 242.90 |
| 480 | 242.89 | 242.89 | 242.89 | 242.88 | 242.88 |
| 485 | 242.88 | 242.87 | 242.87 | 242.87 | 242.86 |
| 490 | 242.86 | 242.86 | 242.85 | 242.85 | 242.85 |
| 495 | 242.84 | 242.84 | 242.84 | 242.83 | 242.83 |
| 500 | 242.83 | 242.82 | 242.82 | 242.82 | 242.82 |
| 505 | 242.81 | 242.81 | 242.81 | 242.80 | 242.80 |
| 510 | 242.80 | 242.79 | 242.79 | 242.79 | 242.79 |
| 515 | 242.78 | 242.78 | 242.78 | 242.77 | 242.77 |
| 520 | 242.77 | 242.76 | 242.76 | 242.76 | 242.75 |
| 525 | 242.75 | 242.75 | 242.75 | 242.74 | 242.74 |
| 530 | 242.74 | 242.73 | 242.73 | 242.73 | 242.72 |
| 535 | 242.72 | 242.72 | 242.72 | 242.71 | 242.71 |
| 540 | 242.71 | 242.70 | 242.70 | 242.70 | 242.69 |
| 545 | 242.69 | 242.69 | 242.69 | 242.68 | 242.68 |
| 550 | 242.68 | 242.67 | 242.67 | 242.67 | 242.66 |
| 555 | 242.66 | 242.66 | 242.66 | 242.65 | 242.65 |
| 560 | 242.65 | 242.64 | 242.64 | 242.64 | 242.63 |
| 565 | 242.63 | 242.63 | 242.63 | 242.62 | 242.62 |
| 570 | 242.62 | 242.61 | 242.61 | 242.61 | 242.60 |
| 575 | 242.60 | 242.60 | 242.60 | 242.59 | 242.59 |
| 580 | 242.59 | 242.58 | 242.58 | 242.58 | 242.57 |
| 585 | 242.57 | 242.57 | 242.56 | 242.56 | 242.56 |
| 590 | 242.56 | 242.55 | 242.55 | 242.55 | 242.54 |
| 595 | 242.54 | 242.54 | 242.53 | 242.53 | 242.53 |
| 600 | 242.53 | 242.52 | 242.52 | 242.52 | 242.51 |
| 605 | 242.51 | 242.51 | 242.50 | 242.50 | 242.50 |

# Basin 3B Drawdown

Subsection: Time vs. Elevation
Label: 1 (OUT)
Scenario: Drawdown

Return Event: 100 years
Storm Event:

**Time vs. Elevation (ft)**

**Output Time increment = 1 min**
**Time on left represents time for first value in each row.**

| Time (min) | Elevation (ft) | Elevation (ft) | Elevation (ft) | Elevation (ft) | Elevation (ft) |
|---|---|---|---|---|---|
| 610 | 242.50 | 242.49 | 242.49 | 242.49 | 242.48 |
| 615 | 242.48 | 242.48 | 242.47 | 242.47 | 242.47 |
| 620 | 242.46 | 242.46 | 242.46 | 242.46 | 242.45 |
| 625 | 242.45 | 242.45 | 242.44 | 242.44 | 242.44 |
| 630 | 242.43 | 242.43 | 242.43 | 242.43 | 242.42 |
| 635 | 242.42 | 242.42 | 242.41 | 242.41 | 242.41 |
| 640 | 242.40 | 242.40 | 242.40 | 242.39 | 242.39 |
| 645 | 242.39 | 242.39 | 242.38 | 242.38 | 242.38 |
| 650 | 242.37 | 242.37 | 242.37 | 242.36 | 242.36 |
| 655 | 242.36 | 242.36 | 242.35 | 242.35 | 242.35 |
| 660 | 242.34 | 242.34 | 242.34 | 242.33 | 242.33 |
| 665 | 242.33 | 242.32 | 242.32 | 242.32 | 242.32 |
| 670 | 242.31 | 242.31 | 242.31 | 242.30 | 242.30 |
| 675 | 242.30 | 242.29 | 242.29 | 242.29 | 242.29 |
| 680 | 242.28 | 242.28 | 242.28 | 242.27 | 242.27 |
| 685 | 242.27 | 242.26 | 242.26 | 242.26 | 242.25 |
| 690 | 242.25 | 242.25 | 242.25 | 242.24 | 242.24 |
| 695 | 242.24 | 242.23 | 242.23 | 242.23 | 242.22 |
| 700 | 242.22 | 242.22 | 242.22 | 242.21 | 242.21 |
| 705 | 242.21 | 242.20 | 242.20 | 242.20 | 242.19 |
| 710 | 242.19 | 242.19 | 242.18 | 242.18 | 242.18 |
| 715 | 242.18 | 242.17 | 242.17 | 242.17 | 242.16 |
| 720 | 242.16 | 242.16 | 242.15 | 242.15 | 242.15 |
| 725 | 242.14 | 242.14 | 242.14 | 242.14 | 242.13 |
| 730 | 242.13 | 242.13 | 242.12 | 242.12 | 242.12 |
| 735 | 242.11 | 242.11 | 242.11 | 242.11 | 242.10 |
| 740 | 242.10 | 242.10 | 242.09 | 242.09 | 242.09 |
| 745 | 242.08 | 242.08 | 242.08 | 242.07 | 242.07 |
| 750 | 242.07 | 242.07 | 242.06 | 242.06 | 242.06 |
| 755 | 242.05 | 242.05 | 242.05 | 242.04 | 242.04 |
| 760 | 242.04 | 242.03 | 242.03 | 242.03 | 242.03 |
| 765 | 242.02 | 242.02 | 242.02 | 242.01 | 242.01 |
| 770 | 242.01 | 242.00 | 242.00 | 241.95 | 241.61 |
| 775 | 240.76 | 240.10 | 239.65 | 239.40 | 239.31 |
| 780 | 239.29 | 239.28 | 239.27 | 239.26 | 239.26 |
| 785 | 239.26 | 239.25 | 239.25 | 239.25 | 239.25 |
| 790 | 239.25 | 239.25 | 239.25 | 239.25 | 239.25 |
| 795 | 239.25 | 239.25 | 239.25 | 239.25 | 239.25 |
| 800 | 239.25 | 239.25 | 239.25 | 239.25 | 239.25 |
| 805 | 239.25 | 239.25 | 239.25 | 239.25 | 239.25 |
| 810 | 239.25 | 239.25 | 239.25 | 239.25 | 239.25 |

# Basin 3B Drawdown

Subsection: Time vs. Elevation
Label: 1 (OUT)
Scenario: Drawdown

Return Event: 100 years
Storm Event:

**Time vs. Elevation (ft)**

**Output Time increment = 1 min**
**Time on left represents time for first value in each row.**

| Time (min) | Elevation (ft) | Elevation (ft) | Elevation (ft) | Elevation (ft) | Elevation (ft) |
|---|---|---|---|---|---|
| 815 | 239.25 | 239.25 | 239.25 | 239.25 | 239.25 |
| 820 | 239.25 | 239.25 | 239.25 | 239.25 | 239.25 |
| 825 | 239.25 | 239.25 | 239.25 | 239.25 | 239.25 |
| 830 | 239.25 | 239.25 | 239.25 | 239.25 | 239.25 |
| 835 | 239.25 | 239.25 | 239.25 | 239.25 | 239.25 |
| 840 | 239.25 | 239.25 | 239.25 | 239.25 | 239.25 |
| 845 | 239.25 | 239.25 | 239.25 | 239.25 | 239.25 |
| 850 | 239.25 | 239.25 | 239.25 | 239.25 | 239.25 |
| 855 | 239.25 | 239.25 | 239.25 | 239.25 | 239.25 |
| 860 | 239.25 | 239.25 | 239.25 | 239.25 | 239.25 |
| 865 | 239.25 | 239.25 | 239.25 | 239.25 | 239.25 |
| 870 | 239.25 | 239.25 | 239.25 | 239.25 | 239.25 |
| 875 | 239.25 | 239.25 | 239.25 | 239.25 | 239.25 |
| 880 | 239.25 | 239.25 | 239.25 | 239.25 | 239.25 |
| 885 | 239.25 | 239.25 | 239.25 | 239.25 | 239.25 |
| 890 | 239.25 | 239.25 | 239.25 | 239.25 | 239.25 |
| 895 | 239.25 | 239.25 | 239.25 | 239.25 | 239.25 |
| 900 | 239.25 | 239.25 | 239.25 | 239.25 | 239.25 |
| 905 | 239.25 | 239.25 | 239.25 | 239.25 | 239.25 |
| 910 | 239.25 | 239.25 | 239.25 | 239.25 | 239.25 |
| 915 | 239.25 | 239.25 | 239.25 | 239.25 | 239.25 |
| 920 | 239.25 | 239.25 | 239.25 | 239.25 | 239.25 |
| 925 | 239.25 | 239.25 | 239.25 | 239.25 | 239.25 |
| 930 | 239.25 | 239.25 | 239.25 | 239.25 | 239.25 |
| 935 | 239.25 | 239.25 | 239.25 | 239.25 | 239.25 |
| 940 | 239.25 | 239.25 | 239.25 | 239.25 | 239.25 |
| 945 | 239.25 | 239.25 | 239.25 | 239.25 | 239.25 |
| 950 | 239.25 | 239.25 | 239.25 | 239.25 | 239.25 |
| 955 | 239.25 | 239.25 | 239.25 | 239.25 | 239.25 |
| 960 | 239.25 | 239.25 | 239.25 | 239.25 | 239.25 |
| 965 | 239.25 | 239.25 | 239.25 | 239.25 | 239.25 |
| 970 | 239.25 | 239.25 | 239.25 | 239.25 | 239.25 |
| 975 | 239.25 | 239.25 | 239.25 | 239.25 | 239.25 |
| 980 | 239.25 | 239.25 | 239.25 | 239.25 | 239.25 |
| 985 | 239.25 | 239.25 | 239.25 | 239.25 | 239.25 |
| 990 | 239.25 | 239.25 | 239.25 | 239.25 | 239.25 |
| 995 | 239.25 | 239.25 | 239.25 | 239.25 | 239.25 |
| 1,000 | 239.25 | 239.25 | 239.25 | 239.25 | 239.25 |
| 1,005 | 239.25 | 239.25 | 239.25 | 239.25 | 239.25 |
| 1,010 | 239.25 | 239.25 | 239.25 | 239.25 | 239.25 |
| 1,015 | 239.25 | 239.25 | 239.25 | 239.25 | 239.25 |

# Basin 3B Drawdown

Subsection: Time vs. Elevation
Label: 1 (OUT)
Scenario: Drawdown

Return Event: 100 years
Storm Event:

**Time vs. Elevation (ft)**

**Output Time increment = 1 min**
**Time on left represents time for first value in each row.**

| Time (min) | Elevation (ft) | Elevation (ft) | Elevation (ft) | Elevation (ft) | Elevation (ft) |
|---|---|---|---|---|---|
| 1,020 | 239.25 | 239.25 | 239.25 | 239.25 | 239.25 |
| 1,025 | 239.25 | 239.25 | 239.25 | 239.25 | 239.25 |
| 1,030 | 239.25 | 239.25 | 239.25 | 239.25 | 239.25 |
| 1,035 | 239.25 | 239.25 | 239.25 | 239.25 | 239.25 |
| 1,040 | 239.25 | 239.25 | 239.25 | 239.25 | 239.25 |
| 1,045 | 239.25 | 239.25 | 239.25 | 239.25 | 239.25 |
| 1,050 | 239.25 | 239.25 | 239.25 | 239.25 | 239.25 |
| 1,055 | 239.25 | 239.25 | 239.25 | 239.25 | 239.25 |
| 1,060 | 239.25 | 239.25 | 239.25 | 239.25 | 239.25 |
| 1,065 | 239.25 | 239.25 | 239.25 | 239.25 | 239.25 |
| 1,070 | 239.25 | 239.25 | 239.25 | 239.25 | 239.25 |
| 1,075 | 239.25 | 239.25 | 239.25 | 239.25 | 239.25 |
| 1,080 | 239.25 | 239.25 | 239.25 | 239.25 | 239.25 |
| 1,085 | 239.25 | 239.25 | 239.25 | 239.25 | 239.25 |
| 1,090 | 239.25 | 239.25 | 239.25 | 239.25 | 239.25 |
| 1,095 | 239.25 | 239.25 | 239.25 | 239.25 | 239.25 |
| 1,100 | 239.25 | 239.25 | 239.25 | 239.25 | 239.25 |
| 1,105 | 239.25 | 239.25 | 239.25 | 239.25 | 239.25 |
| 1,110 | 239.25 | 239.25 | 239.25 | 239.25 | 239.25 |
| 1,115 | 239.25 | 239.25 | 239.25 | 239.25 | 239.25 |
| 1,120 | 239.25 | 239.25 | 239.25 | 239.25 | 239.25 |
| 1,125 | 239.25 | 239.25 | 239.25 | 239.25 | 239.25 |
| 1,130 | 239.25 | 239.25 | 239.25 | 239.25 | 239.25 |
| 1,135 | 239.25 | 239.25 | 239.25 | 239.25 | 239.25 |
| 1,140 | 239.25 | 239.25 | 239.25 | 239.25 | 239.25 |
| 1,145 | 239.25 | 239.25 | 239.25 | 239.25 | 239.25 |
| 1,150 | 239.25 | 239.25 | 239.25 | 239.25 | 239.25 |
| 1,155 | 239.25 | 239.25 | 239.25 | 239.25 | 239.25 |
| 1,160 | 239.25 | 239.25 | 239.25 | 239.25 | 239.25 |
| 1,165 | 239.25 | 239.25 | 239.25 | 239.25 | 239.25 |
| 1,170 | 239.25 | 239.25 | 239.25 | 239.25 | 239.25 |
| 1,175 | 239.25 | 239.25 | 239.25 | 239.25 | 239.25 |
| 1,180 | 239.25 | 239.25 | 239.25 | 239.25 | 239.25 |
| 1,185 | 239.25 | 239.25 | 239.25 | 239.25 | 239.25 |
| 1,190 | 239.25 | 239.25 | 239.25 | 239.25 | 239.25 |
| 1,195 | 239.25 | 239.25 | 239.25 | 239.25 | 239.25 |
| 1,200 | 239.25 | 239.25 | 239.25 | 239.25 | 239.25 |
| 1,205 | 239.25 | 239.25 | 239.25 | 239.25 | 239.25 |
| 1,210 | 239.25 | 239.25 | 239.25 | 239.25 | 239.25 |
| 1,215 | 239.25 | 239.25 | 239.25 | 239.25 | 239.25 |
| 1,220 | 239.25 | 239.25 | 239.25 | 239.25 | 239.25 |

# Basin 3B Drawdown

Subsection: Time vs. Elevation
Label: 1 (OUT)
Scenario: Drawdown

Return Event: 100 years
Storm Event:

**Time vs. Elevation (ft)**

**Output Time increment = 1 min**
**Time on left represents time for first value in each row.**

| Time (min) | Elevation (ft) | Elevation (ft) | Elevation (ft) | Elevation (ft) | Elevation (ft) |
|---|---|---|---|---|---|
| 1,225 | 239.25 | 239.25 | 239.25 | 239.25 | 239.25 |
| 1,230 | 239.25 | 239.25 | 239.25 | 239.25 | 239.25 |
| 1,235 | 239.25 | 239.25 | 239.25 | 239.25 | 239.25 |
| 1,240 | 239.25 | 239.25 | 239.25 | 239.25 | 239.25 |
| 1,245 | 239.25 | 239.25 | 239.25 | 239.25 | 239.25 |
| 1,250 | 239.25 | 239.25 | 239.25 | 239.25 | 239.25 |
| 1,255 | 239.25 | 239.25 | 239.25 | 239.25 | 239.25 |
| 1,260 | 239.25 | 239.25 | 239.25 | 239.25 | 239.25 |
| 1,265 | 239.25 | 239.25 | 239.25 | 239.25 | 239.25 |
| 1,270 | 239.25 | 239.25 | 239.25 | 239.25 | 239.25 |
| 1,275 | 239.25 | 239.25 | 239.25 | 239.25 | 239.25 |
| 1,280 | 239.25 | 239.25 | 239.25 | 239.25 | 239.25 |
| 1,285 | 239.25 | 239.25 | 239.25 | 239.25 | 239.25 |
| 1,290 | 239.25 | 239.25 | 239.25 | 239.25 | 239.25 |
| 1,295 | 239.25 | 239.25 | 239.25 | 239.25 | 239.25 |
| 1,300 | 239.25 | 239.25 | 239.25 | 239.25 | 239.25 |
| 1,305 | 239.25 | 239.25 | 239.25 | 239.25 | 239.25 |
| 1,310 | 239.25 | 239.25 | 239.25 | 239.25 | 239.25 |
| 1,315 | 239.25 | 239.25 | 239.25 | 239.25 | 239.25 |
| 1,320 | 239.25 | 239.25 | 239.25 | 239.25 | 239.25 |
| 1,325 | 239.25 | 239.25 | 239.25 | 239.25 | 239.25 |
| 1,330 | 239.25 | 239.25 | 239.25 | 239.25 | 239.25 |
| 1,335 | 239.25 | 239.25 | 239.25 | 239.25 | 239.25 |
| 1,340 | 239.25 | 239.25 | 239.25 | 239.25 | 239.25 |
| 1,345 | 239.25 | 239.25 | 239.25 | 239.25 | 239.25 |
| 1,350 | 239.25 | 239.25 | 239.25 | 239.25 | 239.25 |
| 1,355 | 239.25 | 239.25 | 239.25 | 239.25 | 239.25 |
| 1,360 | 239.25 | 239.25 | 239.25 | 239.25 | 239.25 |
| 1,365 | 239.25 | 239.25 | 239.25 | 239.25 | 239.25 |
| 1,370 | 239.25 | 239.25 | 239.25 | 239.25 | 239.25 |
| 1,375 | 239.25 | 239.25 | 239.25 | 239.25 | 239.25 |
| 1,380 | 239.25 | 239.25 | 239.25 | 239.25 | 239.25 |
| 1,385 | 239.25 | 239.25 | 239.25 | 239.25 | 239.25 |
| 1,390 | 239.25 | 239.25 | 239.25 | 239.25 | 239.25 |
| 1,395 | 239.25 | 239.25 | 239.25 | 239.25 | 239.25 |
| 1,400 | 239.25 | 239.25 | 239.25 | 239.25 | 239.25 |
| 1,405 | 239.25 | 239.25 | 239.25 | 239.25 | 239.25 |
| 1,410 | 239.25 | 239.25 | 239.25 | 239.25 | 239.25 |
| 1,415 | 239.25 | 239.25 | 239.25 | 239.25 | 239.25 |
| 1,420 | 239.25 | 239.25 | 239.25 | 239.25 | 239.25 |
| 1,425 | 239.25 | 239.25 | 239.25 | 239.25 | 239.25 |

# Basin 3B Drawdown

Subsection: Time vs. Elevation
Label: 1 (OUT)
Scenario: Drawdown

Return Event: 100 years
Storm Event:

**Time vs. Elevation (ft)**

**Output Time increment = 1 min**
**Time on left represents time for first value in each row.**

| Time (min) | Elevation (ft) | Elevation (ft) | Elevation (ft) | Elevation (ft) | Elevation (ft) |
|---|---|---|---|---|---|
| 1,430 | 239.25 | 239.25 | 239.25 | 239.25 | 239.25 |
| 1,435 | 239.25 | 239.25 | 239.25 | 239.25 | 239.25 |
| 1,440 | 239.25 | 239.25 | 239.25 | 239.25 | 239.25 |
| 1,445 | 239.25 | 239.25 | 239.25 | 239.25 | 239.25 |
| 1,450 | 239.25 | 239.25 | 239.25 | 239.25 | 239.25 |
| 1,455 | 239.25 | 239.25 | 239.25 | 239.25 | 239.25 |
| 1,460 | 239.25 | 239.25 | 239.25 | 239.25 | 239.25 |
| 1,465 | 239.25 | 239.25 | 239.25 | 239.25 | 239.25 |
| 1,470 | 239.25 | 239.25 | 239.25 | 239.25 | 239.25 |
| 1,475 | 239.25 | 239.25 | 239.25 | 239.25 | 239.25 |
| 1,480 | 239.25 | 239.25 | 239.25 | 239.25 | 239.25 |
| 1,485 | 239.25 | 239.25 | 239.25 | 239.25 | 239.25 |
| 1,490 | 239.25 | 239.25 | 239.25 | 239.25 | 239.25 |
| 1,495 | 239.25 | 239.25 | 239.25 | 239.25 | 239.25 |
| 1,500 | 239.25 | 239.25 | 239.25 | 239.25 | 239.25 |
| 1,505 | 239.25 | 239.25 | 239.25 | 239.25 | 239.25 |
| 1,510 | 239.25 | 239.25 | 239.25 | 239.25 | 239.25 |
| 1,515 | 239.25 | 239.25 | 239.25 | 239.25 | 239.25 |
| 1,520 | 239.25 | 239.25 | 239.25 | 239.25 | 239.25 |
| 1,525 | 239.25 | 239.25 | 239.25 | 239.25 | 239.25 |
| 1,530 | 239.25 | 239.25 | 239.25 | 239.25 | 239.25 |
| 1,535 | 239.25 | 239.25 | 239.25 | 239.25 | 239.25 |
| 1,540 | 239.25 | 239.25 | 239.25 | 239.25 | 239.25 |
| 1,545 | 239.25 | 239.25 | 239.25 | 239.25 | 239.25 |
| 1,550 | 239.25 | 239.25 | 239.25 | 239.25 | 239.25 |
| 1,555 | 239.25 | 239.25 | 239.25 | 239.25 | 239.25 |
| 1,560 | 239.25 | 239.25 | 239.25 | 239.25 | 239.25 |
| 1,565 | 239.25 | 239.25 | 239.25 | 239.25 | 239.25 |
| 1,570 | 239.25 | 239.25 | 239.25 | 239.25 | 239.25 |
| 1,575 | 239.25 | 239.25 | 239.25 | 239.25 | 239.25 |
| 1,580 | 239.25 | 239.25 | 239.25 | 239.25 | 239.25 |
| 1,585 | 239.25 | 239.25 | 239.25 | 239.25 | 239.25 |
| 1,590 | 239.25 | 239.25 | 239.25 | 239.25 | 239.25 |
| 1,595 | 239.25 | 239.25 | 239.25 | 239.25 | 239.25 |
| 1,600 | 239.25 | 239.25 | 239.25 | 239.25 | 239.25 |
| 1,605 | 239.25 | 239.25 | 239.25 | 239.25 | 239.25 |
| 1,610 | 239.25 | 239.25 | 239.25 | 239.25 | 239.25 |
| 1,615 | 239.25 | 239.25 | 239.25 | 239.25 | 239.25 |
| 1,620 | 239.25 | 239.25 | 239.25 | 239.25 | 239.25 |
| 1,625 | 239.25 | 239.25 | 239.25 | 239.25 | 239.25 |
| 1,630 | 239.25 | 239.25 | 239.25 | 239.25 | 239.25 |

# Basin 3B Drawdown

Subsection: Time vs. Elevation
Label: 1 (OUT)
Scenario: Drawdown

Return Event: 100 years
Storm Event:

**Time vs. Elevation (ft)**

**Output Time increment = 1 min**
**Time on left represents time for first value in each row.**

| Time (min) | Elevation (ft) | Elevation (ft) | Elevation (ft) | Elevation (ft) | Elevation (ft) |
|---|---|---|---|---|---|
| 1,635 | 239.25 | 239.25 | 239.25 | 239.25 | 239.25 |
| 1,640 | 239.25 | 239.25 | 239.25 | 239.25 | 239.25 |
| 1,645 | 239.25 | 239.25 | 239.25 | 239.25 | 239.25 |
| 1,650 | 239.25 | 239.25 | 239.25 | 239.25 | 239.25 |
| 1,655 | 239.25 | 239.25 | 239.25 | 239.25 | 239.25 |
| 1,660 | 239.25 | 239.25 | 239.25 | 239.25 | 239.25 |
| 1,665 | 239.25 | 239.25 | 239.25 | 239.25 | 239.25 |
| 1,670 | 239.25 | 239.25 | 239.25 | 239.25 | 239.25 |
| 1,675 | 239.25 | 239.25 | 239.25 | 239.25 | 239.25 |
| 1,680 | 239.25 | 239.25 | 239.25 | 239.25 | 239.25 |
| 1,685 | 239.25 | 239.25 | 239.25 | 239.25 | 239.25 |
| 1,690 | 239.25 | 239.25 | 239.25 | 239.25 | 239.25 |
| 1,695 | 239.25 | 239.25 | 239.25 | 239.25 | 239.25 |
| 1,700 | 239.25 | 239.25 | 239.25 | 239.25 | 239.25 |
| 1,705 | 239.25 | 239.25 | 239.25 | 239.25 | 239.25 |
| 1,710 | 239.25 | 239.25 | 239.25 | 239.25 | 239.25 |
| 1,715 | 239.25 | 239.25 | 239.25 | 239.25 | 239.25 |
| 1,720 | 239.25 | 239.25 | 239.25 | 239.25 | 239.25 |
| 1,725 | 239.25 | 239.25 | 239.25 | 239.25 | 239.25 |
| 1,730 | 239.25 | 239.25 | 239.25 | 239.25 | 239.25 |
| 1,735 | 239.25 | 239.25 | 239.25 | 239.25 | 239.25 |
| 1,740 | 239.25 | 239.25 | 239.25 | 239.25 | 239.25 |
| 1,745 | 239.25 | 239.25 | 239.25 | 239.25 | 239.25 |
| 1,750 | 239.25 | 239.25 | 239.25 | 239.25 | 239.25 |
| 1,755 | 239.25 | 239.25 | 239.25 | 239.25 | 239.25 |
| 1,760 | 239.25 | 239.25 | 239.25 | 239.25 | 239.25 |
| 1,765 | 239.25 | 239.25 | 239.25 | 239.25 | 239.25 |
| 1,770 | 239.25 | 239.25 | 239.25 | 239.25 | 239.25 |
| 1,775 | 239.25 | 239.25 | 239.25 | 239.25 | 239.25 |
| 1,780 | 239.25 | 239.25 | 239.25 | 239.25 | 239.25 |
| 1,785 | 239.25 | 239.25 | 239.25 | 239.25 | 239.25 |
| 1,790 | 239.25 | 239.25 | 239.25 | 239.25 | 239.25 |
| 1,795 | 239.25 | 239.25 | 239.25 | 239.25 | 239.25 |
| 1,800 | 239.25 | 239.25 | 239.25 | 239.25 | 239.25 |
| 1,805 | 239.25 | 239.25 | 239.25 | 239.25 | 239.25 |
| 1,810 | 239.25 | 239.25 | 239.25 | 239.25 | 239.25 |
| 1,815 | 239.25 | 239.25 | 239.25 | 239.25 | 239.25 |
| 1,820 | 239.25 | 239.25 | 239.25 | 239.25 | 239.25 |
| 1,825 | 239.25 | 239.25 | 239.25 | 239.25 | 239.25 |
| 1,830 | 239.25 | 239.25 | 239.25 | 239.25 | 239.25 |
| 1,835 | 239.25 | 239.25 | 239.25 | 239.25 | 239.25 |

# Basin 3B Drawdown

Subsection: Time vs. Elevation
Label: 1 (OUT)
Scenario: Drawdown

Return Event: 100 years
Storm Event:

**Time vs. Elevation (ft)**

**Output Time increment = 1 min**
**Time on left represents time for first value in each row.**

| Time (min) | Elevation (ft) | Elevation (ft) | Elevation (ft) | Elevation (ft) | Elevation (ft) |
|---|---|---|---|---|---|
| 1,840 | 239.25 | 239.25 | 239.25 | 239.25 | 239.25 |
| 1,845 | 239.25 | 239.25 | 239.25 | 239.25 | 239.25 |
| 1,850 | 239.25 | 239.25 | 239.25 | 239.25 | 239.25 |
| 1,855 | 239.25 | 239.25 | 239.25 | 239.25 | 239.25 |
| 1,860 | 239.25 | 239.25 | 239.25 | 239.25 | 239.25 |
| 1,865 | 239.25 | 239.25 | 239.25 | 239.25 | 239.25 |
| 1,870 | 239.25 | 239.25 | 239.25 | 239.25 | 239.25 |
| 1,875 | 239.25 | 239.25 | 239.25 | 239.25 | 239.25 |
| 1,880 | 239.25 | 239.25 | 239.25 | 239.25 | 239.25 |
| 1,885 | 239.25 | 239.25 | 239.25 | 239.25 | 239.25 |
| 1,890 | 239.25 | 239.25 | 239.25 | 239.25 | 239.25 |
| 1,895 | 239.25 | 239.25 | 239.25 | 239.25 | 239.25 |
| 1,900 | 239.25 | 239.25 | 239.25 | 239.25 | 239.25 |
| 1,905 | 239.25 | 239.25 | 239.25 | 239.25 | 239.25 |
| 1,910 | 239.25 | 239.25 | 239.25 | 239.25 | 239.25 |
| 1,915 | 239.25 | 239.25 | 239.25 | 239.25 | 239.25 |
| 1,920 | 239.25 | 239.25 | 239.25 | 239.25 | 239.25 |
| 1,925 | 239.25 | 239.25 | 239.25 | 239.25 | 239.25 |
| 1,930 | 239.25 | 239.25 | 239.25 | 239.25 | 239.25 |
| 1,935 | 239.25 | 239.25 | 239.25 | 239.25 | 239.25 |
| 1,940 | 239.25 | 239.25 | 239.25 | 239.25 | 239.25 |
| 1,945 | 239.25 | 239.25 | 239.25 | 239.25 | 239.25 |
| 1,950 | 239.25 | 239.25 | 239.25 | 239.25 | 239.25 |
| 1,955 | 239.25 | 239.25 | 239.25 | 239.25 | 239.25 |
| 1,960 | 239.25 | 239.25 | 239.25 | 239.25 | 239.25 |
| 1,965 | 239.25 | 239.25 | 239.25 | 239.25 | 239.25 |
| 1,970 | 239.25 | 239.25 | 239.25 | 239.25 | 239.25 |
| 1,975 | 239.25 | 239.25 | 239.25 | 239.25 | 239.25 |
| 1,980 | 239.25 | 239.25 | 239.25 | 239.25 | 239.25 |
| 1,985 | 239.25 | 239.25 | 239.25 | 239.25 | 239.25 |
| 1,990 | 239.25 | 239.25 | 239.25 | 239.25 | 239.25 |
| 1,995 | 239.25 | 239.25 | 239.25 | 239.25 | 239.25 |
| 2,000 | 239.25 | (N/A) | (N/A) | (N/A) | (N/A) |

# Basin 3B Drawdown

Subsection: Outlet Input Data
Label: Outlet#1
Scenario: Drawdown

Return Event: 100 years
Storm Event:

| Requested Pond Water Surface Elevations | |
|---|---|
| Minimum (Headwater) | 245.00 ft |
| Increment (Headwater) | 0.10 ft |
| Maximum (Headwater) | 254.00 ft |

## Outlet Connectivity

| Structure Type | Outlet ID | Direction | Outfall | E1 (ft) | E2 (ft) |
|---|---|---|---|---|---|
| Orifice-Circular | Orifice - LF | Forward | TW | 242.75 | 247.00 |
| Orifice-Circular | Orifice - HF | Forward | TW | 243.75 | 247.00 |
| Inlet Box | Riser - 1 | Forward | TW | 245.50 | 247.00 |
| Orifice-Circular | Orifice - Underdrain | Forward | TW | 239.25 | 247.00 |
| Tailwater Settings | Tailwater | | | (N/A) | (N/A) |

# Basin 3B Drawdown

Subsection: Outlet Input Data
Label: Outlet#1
Scenario: Drawdown

Return Event: 100 years
Storm Event:

| Structure ID: Orifice - LF<br>Structure Type: Orifice-Circular | |
|---|---|
| Number of Openings | 1 |
| Elevation | 242.75 ft |
| Orifice Diameter | 2.0 in |
| Orifice Coefficient | 0.600 |

| Structure ID: Riser - 1<br>Structure Type: Inlet Box | |
|---|---|
| Number of Openings | 1 |
| Elevation | 245.50 ft |
| Orifice Area | 4.7 ft² |
| Orifice Coefficient | 0.600 |
| Weir Length | 9.20 ft |
| Weir Coefficient | 3.00 (ft^0.5)/s |
| K Reverse | 1.000 |
| Manning's n | 0.000 |
| Kev, Charged Riser | 0.000 |
| Weir Submergence | False |
| Orifice H to crest | True |

| Structure ID: Orifice - HF<br>Structure Type: Orifice-Circular | |
|---|---|
| Number of Openings | 1 |
| Elevation | 243.75 ft |
| Orifice Diameter | 4.0 in |
| Orifice Coefficient | 0.600 |

| Structure ID: Orifice - Underdrain<br>Structure Type: Orifice-Circular | |
|---|---|
| Number of Openings | 1 |
| Elevation | 239.25 ft |
| Orifice Diameter | 2.0 in |
| Orifice Coefficient | 0.600 |

| Structure ID: TW<br>Structure Type: TW Setup, DS Channel | |
|---|---|
| Tailwater Type | Free Outfall |

| Convergence Tolerances | |
|---|---|
| Maximum Iterations | 80 |

# Basin 3B Drawdown

Subsection: Outlet Input Data
Label: Outlet#1
Scenario: Drawdown

Return Event: 100 years
Storm Event:

| Convergence Tolerances | |
|---|---|
| Tailwater Tolerance (Minimum) | 0.01 ft |
| Tailwater Tolerance (Maximum) | 0.10 ft |
| Headwater Tolerance (Minimum) | 0.01 ft |
| Headwater Tolerance (Maximum) | 0.10 ft |
| Flow Tolerance (Minimum) | 0.001 ft³/s |
| Flow Tolerance (Maximum) | 10.000 ft³/s |

# Basin 3B Drawdown

Subsection: Elevation-Volume-Flow Table (Pond)
Label: 1
Scenario: Drawdown

Return Event: 100 years
Storm Event:

| Infiltration | |
|---|---|
| Infiltration Method (Computed) | No Infiltration |

| Initial Conditions | |
|---|---|
| Elevation (Water Surface, Initial) | 247.00 ft |
| Volume (Initial) | 0.607 ac-ft |
| Flow (Initial Outlet) | 28.95 ft³/s |
| Flow (Initial Infiltration) | 0.00 ft³/s |
| Flow (Initial, Total) | 28.95 ft³/s |
| Time Increment | 1 min |

| Elevation (ft) | Outflow (ft³/s) | Storage (ac-ft) | Area (ft²) | Infiltration (ft³/s) | Flow (Total) (ft³/s) | 2S/t + O (ft³/s) |
|---|---|---|---|---|---|---|
| 239.00 | 0.00 | 0.000 | 10.000 | 0.00 | 0.00 | 0.00 |
| 239.10 | 0.00 | 0.000 | 10.000 | 0.00 | 0.00 | 0.03 |
| 239.20 | 0.00 | 0.000 | 10.000 | 0.00 | 0.00 | 0.07 |
| 239.25 | 0.00 | 0.000 | 10.000 | 0.00 | 0.00 | 0.08 |
| 239.30 | 0.00 | 0.000 | 10.000 | 0.00 | 0.00 | 0.10 |
| 239.40 | 0.02 | 0.000 | 10.000 | 0.00 | 0.02 | 0.16 |
| 239.50 | 0.04 | 0.000 | 10.000 | 0.00 | 0.04 | 0.21 |
| 239.60 | 0.05 | 0.000 | 10.000 | 0.00 | 0.05 | 0.25 |
| 239.70 | 0.06 | 0.000 | 10.000 | 0.00 | 0.06 | 0.30 |
| 239.80 | 0.07 | 0.000 | 10.000 | 0.00 | 0.07 | 0.34 |
| 239.90 | 0.08 | 0.000 | 10.000 | 0.00 | 0.08 | 0.38 |
| 240.00 | 0.09 | 0.000 | 10.000 | 0.00 | 0.09 | 0.42 |
| 240.10 | 0.09 | 0.000 | 10.000 | 0.00 | 0.09 | 0.46 |
| 240.20 | 0.10 | 0.000 | 10.000 | 0.00 | 0.10 | 0.50 |
| 240.30 | 0.10 | 0.000 | 10.000 | 0.00 | 0.10 | 0.54 |
| 240.40 | 0.11 | 0.000 | 10.000 | 0.00 | 0.11 | 0.58 |
| 240.50 | 0.11 | 0.000 | 10.000 | 0.00 | 0.11 | 0.61 |
| 240.60 | 0.12 | 0.000 | 10.000 | 0.00 | 0.12 | 0.65 |
| 240.70 | 0.12 | 0.000 | 10.000 | 0.00 | 0.12 | 0.69 |
| 240.80 | 0.13 | 0.000 | 10.000 | 0.00 | 0.13 | 0.73 |
| 240.90 | 0.13 | 0.000 | 10.000 | 0.00 | 0.13 | 0.76 |
| 241.00 | 0.14 | 0.000 | 10.000 | 0.00 | 0.14 | 0.80 |
| 241.10 | 0.14 | 0.000 | 10.000 | 0.00 | 0.14 | 0.84 |
| 241.20 | 0.14 | 0.001 | 10.000 | 0.00 | 0.14 | 0.88 |
| 241.30 | 0.15 | 0.001 | 10.000 | 0.00 | 0.15 | 0.91 |
| 241.40 | 0.15 | 0.001 | 10.000 | 0.00 | 0.15 | 0.95 |
| 241.50 | 0.15 | 0.001 | 10.000 | 0.00 | 0.15 | 0.99 |
| 241.60 | 0.16 | 0.001 | 10.000 | 0.00 | 0.16 | 1.02 |
| 241.70 | 0.16 | 0.001 | 10.000 | 0.00 | 0.16 | 1.06 |

# Basin 3B Drawdown

Subsection: Elevation-Volume-Flow Table (Pond) Return Event: 100 years
Label: 1 Storm Event:
Scenario: Drawdown

| Elevation (ft) | Outflow (ft³/s) | Storage (ac-ft) | Area (ft²) | Infiltration (ft³/s) | Flow (Total) (ft³/s) | 2S/t + O (ft³/s) |
|---|---|---|---|---|---|---|
| 241.80 | 0.16 | 0.001 | 10.000 | 0.00 | 0.16 | 1.10 |
| 241.90 | 0.17 | 0.001 | 10.000 | 0.00 | 0.17 | 1.13 |
| 242.00 | 0.17 | 0.001 | 3,361.000 | 0.00 | 0.17 | 1.56 |
| 242.10 | 0.17 | 0.009 | 3,427.175 | 0.00 | 0.17 | 12.88 |
| 242.20 | 0.18 | 0.017 | 3,493.994 | 0.00 | 0.18 | 24.42 |
| 242.30 | 0.18 | 0.025 | 3,561.459 | 0.00 | 0.18 | 36.18 |
| 242.40 | 0.18 | 0.033 | 3,629.569 | 0.00 | 0.18 | 48.17 |
| 242.50 | 0.19 | 0.041 | 3,698.324 | 0.00 | 0.19 | 60.38 |
| 242.60 | 0.19 | 0.050 | 3,767.724 | 0.00 | 0.19 | 72.83 |
| 242.70 | 0.19 | 0.059 | 3,837.770 | 0.00 | 0.19 | 85.51 |
| 242.75 | 0.19 | 0.063 | 3,873.034 | 0.00 | 0.19 | 91.94 |
| 242.80 | 0.20 | 0.068 | 3,908.460 | 0.00 | 0.20 | 98.42 |
| 242.90 | 0.22 | 0.077 | 3,979.796 | 0.00 | 0.22 | 111.60 |
| 243.00 | 0.24 | 0.086 | 4,051.776 | 0.00 | 0.24 | 125.00 |
| 243.10 | 0.26 | 0.095 | 4,124.402 | 0.00 | 0.26 | 138.64 |
| 243.20 | 0.27 | 0.105 | 4,197.673 | 0.00 | 0.27 | 152.53 |
| 243.30 | 0.28 | 0.115 | 4,271.589 | 0.00 | 0.28 | 166.65 |
| 243.40 | 0.29 | 0.124 | 4,346.150 | 0.00 | 0.29 | 181.02 |
| 243.50 | 0.30 | 0.135 | 4,421.356 | 0.00 | 0.30 | 195.65 |
| 243.60 | 0.31 | 0.145 | 4,497.208 | 0.00 | 0.31 | 210.52 |
| 243.70 | 0.32 | 0.155 | 4,573.704 | 0.00 | 0.32 | 225.64 |
| 243.75 | 0.32 | 0.160 | 4,612.194 | 0.00 | 0.32 | 233.30 |
| 243.80 | 0.33 | 0.166 | 4,650.846 | 0.00 | 0.33 | 241.03 |
| 243.90 | 0.37 | 0.177 | 4,728.632 | 0.00 | 0.37 | 256.71 |
| 244.00 | 0.44 | 0.187 | 4,807.064 | 0.00 | 0.44 | 272.67 |
| 244.10 | 0.53 | 0.199 | 4,886.141 | 0.00 | 0.53 | 288.91 |
| 244.20 | 0.58 | 0.210 | 4,965.863 | 0.00 | 0.58 | 305.38 |
| 244.30 | 0.62 | 0.221 | 5,046.231 | 0.00 | 0.62 | 322.11 |
| 244.40 | 0.66 | 0.233 | 5,127.243 | 0.00 | 0.66 | 339.10 |
| 244.50 | 0.70 | 0.245 | 5,208.900 | 0.00 | 0.70 | 356.37 |
| 244.60 | 0.73 | 0.257 | 5,291.203 | 0.00 | 0.73 | 373.90 |
| 244.70 | 0.76 | 0.269 | 5,374.151 | 0.00 | 0.76 | 391.70 |
| 244.80 | 0.79 | 0.282 | 5,457.743 | 0.00 | 0.79 | 409.79 |
| 244.90 | 0.82 | 0.294 | 5,541.981 | 0.00 | 0.82 | 428.15 |
| 245.00 | 0.84 | 0.307 | 5,626.864 | 0.00 | 0.84 | 446.79 |
| 245.10 | 0.87 | 0.320 | 5,712.392 | 0.00 | 0.87 | 465.71 |
| 245.20 | 0.89 | 0.333 | 5,798.566 | 0.00 | 0.89 | 484.92 |
| 245.30 | 0.92 | 0.347 | 5,885.384 | 0.00 | 0.92 | 504.42 |
| 245.40 | 0.94 | 0.360 | 5,972.848 | 0.00 | 0.94 | 524.20 |
| 245.50 | 0.96 | 0.374 | 6,060.956 | 0.00 | 0.96 | 544.28 |
| 245.60 | 1.86 | 0.388 | 6,149.710 | 0.00 | 1.86 | 565.53 |
| 245.70 | 3.47 | 0.402 | 6,239.109 | 0.00 | 3.47 | 587.79 |
| 245.80 | 5.56 | 0.417 | 6,329.153 | 0.00 | 5.56 | 610.83 |

# Basin 3B Drawdown

Subsection: Elevation-Volume-Flow Table (Pond) Return Event: 100 years
Label: 1 Storm Event:
Scenario: Drawdown

| Elevation (ft) | Outflow (ft³/s) | Storage (ac-ft) | Area (ft²) | Infiltration (ft³/s) | Flow (Total) (ft³/s) | 2S/t + O (ft³/s) |
|---|---|---|---|---|---|---|
| 245.90 | 8.03 | 0.431 | 6,419.842 | 0.00 | 8.03 | 634.54 |
| 246.00 | 10.82 | 0.446 | 6,511.176 | 0.00 | 10.82 | 658.89 |
| 246.10 | 13.91 | 0.461 | 6,603.156 | 0.00 | 13.91 | 683.84 |
| 246.20 | 17.27 | 0.477 | 6,695.780 | 0.00 | 17.27 | 709.36 |
| 246.30 | 20.87 | 0.492 | 6,789.050 | 0.00 | 20.87 | 735.43 |
| 246.40 | 22.60 | 0.508 | 6,882.964 | 0.00 | 22.60 | 759.95 |
| 246.50 | 23.78 | 0.524 | 6,977.524 | 0.00 | 23.78 | 784.23 |
| 246.60 | 24.90 | 0.540 | 7,072.729 | 0.00 | 24.90 | 808.77 |
| 246.70 | 25.97 | 0.556 | 7,168.579 | 0.00 | 25.97 | 833.58 |
| 246.80 | 27.00 | 0.573 | 7,265.074 | 0.00 | 27.00 | 858.66 |
| 246.90 | 27.99 | 0.590 | 7,362.215 | 0.00 | 27.99 | 884.03 |
| 247.00 | 28.95 | 0.607 | 7,460.000 | 0.00 | 28.95 | 909.69 |

# Basin 3B Drawdown

## Index

1

1 (Elevation-Volume-Flow Table (Pond))...

1 (Elevation-Volume-Flow Table (Pond), 100 years (Drawdown))...14, 15, 16

1 (OUT) (Time vs. Elevation)...

1 (OUT) (Time vs. Elevation, 100 years (Drawdown))...1, 2, 3, 4, 5, 6, 7, 8, 9, 10

O

Outlet#1 (Outlet Input Data)...

Outlet#1 (Outlet Input Data, 100 years (Drawdown))...11, 12, 13

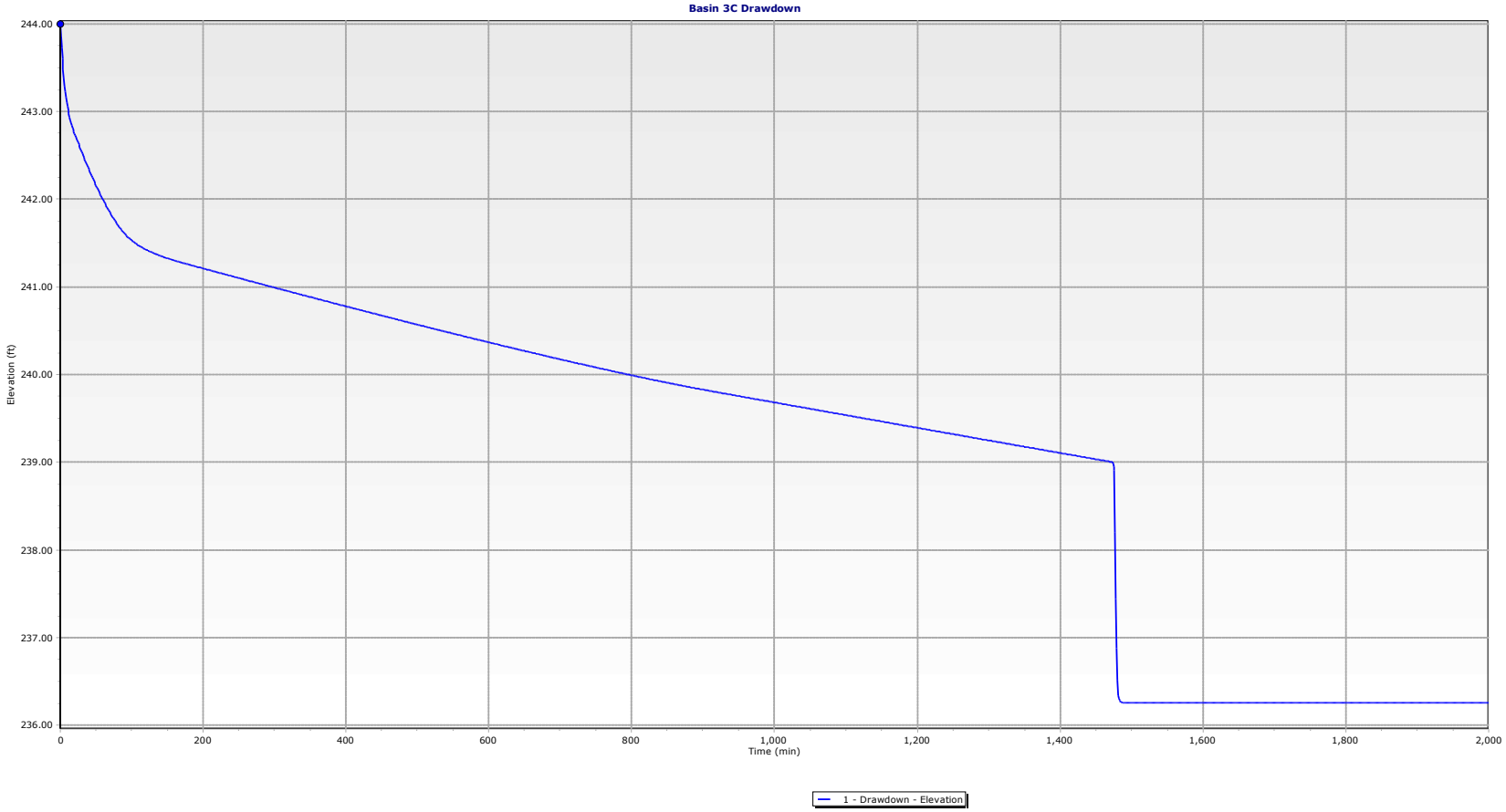
Basin 3C Drawdown
244.00
243.00
242.00
241.00
240.00
239.00
238.00
237.00
236.00
Elevation (ft)
0
200
400
600
800
1,000
1,200
1,400
1,600
1,800
2,000
Time (min)
1 - Drawdown - Elevation

# Table of Contents


| | | |
|---|---|---|
| 1 (OUT) | Time vs. Elevation | 1 |
| Outlet#1 | Outlet Input Data | 11 |
| 1 | Elevation-Volume-Flow Table (Pond) | 14 |

# Basin 3C Drawdown

Subsection: Time vs. Elevation
Label: 1 (OUT)
Scenario: Drawdown

Return Event: 100 years
Storm Event:

**Time vs. Elevation (ft)**

**Output Time increment = 1 min**
**Time on left represents time for first value in each row.**

| Time (min) | Elevation (ft) | Elevation (ft) | Elevation (ft) | Elevation (ft) | Elevation (ft) |
|---|---|---|---|---|---|
| 0 | 244.00 | 243.86 | 243.73 | 243.60 | 243.48 |
| 5 | 243.38 | 243.30 | 243.22 | 243.16 | 243.10 |
| 10 | 243.05 | 243.01 | 242.97 | 242.93 | 242.90 |
| 15 | 242.87 | 242.84 | 242.82 | 242.79 | 242.77 |
| 20 | 242.75 | 242.73 | 242.71 | 242.68 | 242.66 |
| 25 | 242.64 | 242.62 | 242.60 | 242.58 | 242.56 |
| 30 | 242.54 | 242.52 | 242.50 | 242.48 | 242.46 |
| 35 | 242.44 | 242.42 | 242.40 | 242.38 | 242.36 |
| 40 | 242.34 | 242.32 | 242.30 | 242.28 | 242.27 |
| 45 | 242.25 | 242.23 | 242.21 | 242.19 | 242.18 |
| 50 | 242.16 | 242.14 | 242.12 | 242.11 | 242.09 |
| 55 | 242.07 | 242.06 | 242.04 | 242.02 | 242.01 |
| 60 | 241.99 | 241.98 | 241.96 | 241.94 | 241.93 |
| 65 | 241.91 | 241.90 | 241.88 | 241.87 | 241.86 |
| 70 | 241.84 | 241.83 | 241.81 | 241.80 | 241.79 |
| 75 | 241.77 | 241.76 | 241.75 | 241.74 | 241.72 |
| 80 | 241.71 | 241.70 | 241.69 | 241.68 | 241.67 |
| 85 | 241.66 | 241.65 | 241.64 | 241.63 | 241.62 |
| 90 | 241.61 | 241.60 | 241.59 | 241.58 | 241.57 |
| 95 | 241.57 | 241.56 | 241.55 | 241.54 | 241.54 |
| 100 | 241.53 | 241.52 | 241.52 | 241.51 | 241.51 |
| 105 | 241.50 | 241.49 | 241.49 | 241.48 | 241.48 |
| 110 | 241.47 | 241.47 | 241.46 | 241.46 | 241.45 |
| 115 | 241.45 | 241.44 | 241.44 | 241.43 | 241.43 |
| 120 | 241.43 | 241.42 | 241.42 | 241.41 | 241.41 |
| 125 | 241.41 | 241.40 | 241.40 | 241.39 | 241.39 |
| 130 | 241.39 | 241.38 | 241.38 | 241.38 | 241.37 |
| 135 | 241.37 | 241.37 | 241.36 | 241.36 | 241.36 |
| 140 | 241.35 | 241.35 | 241.35 | 241.35 | 241.34 |
| 145 | 241.34 | 241.34 | 241.33 | 241.33 | 241.33 |
| 150 | 241.33 | 241.32 | 241.32 | 241.32 | 241.32 |
| 155 | 241.31 | 241.31 | 241.31 | 241.31 | 241.30 |
| 160 | 241.30 | 241.30 | 241.30 | 241.29 | 241.29 |
| 165 | 241.29 | 241.29 | 241.28 | 241.28 | 241.28 |
| 170 | 241.28 | 241.27 | 241.27 | 241.27 | 241.27 |
| 175 | 241.27 | 241.26 | 241.26 | 241.26 | 241.26 |
| 180 | 241.25 | 241.25 | 241.25 | 241.25 | 241.25 |
| 185 | 241.24 | 241.24 | 241.24 | 241.24 | 241.23 |
| 190 | 241.23 | 241.23 | 241.23 | 241.23 | 241.22 |
| 195 | 241.22 | 241.22 | 241.22 | 241.21 | 241.21 |

# Basin 3C Drawdown

Subsection: Time vs. Elevation
Label: 1 (OUT)
Scenario: Drawdown

Return Event: 100 years
Storm Event:

**Time vs. Elevation (ft)**

**Output Time increment = 1 min**
**Time on left represents time for first value in each row.**

| Time (min) | Elevation (ft) | Elevation (ft) | Elevation (ft) | Elevation (ft) | Elevation (ft) |
|---|---|---|---|---|---|
| 200 | 241.21 | 241.21 | 241.21 | 241.20 | 241.20 |
| 205 | 241.20 | 241.20 | 241.20 | 241.19 | 241.19 |
| 210 | 241.19 | 241.19 | 241.18 | 241.18 | 241.18 |
| 215 | 241.18 | 241.18 | 241.17 | 241.17 | 241.17 |
| 220 | 241.17 | 241.16 | 241.16 | 241.16 | 241.16 |
| 225 | 241.16 | 241.15 | 241.15 | 241.15 | 241.15 |
| 230 | 241.14 | 241.14 | 241.14 | 241.14 | 241.14 |
| 235 | 241.13 | 241.13 | 241.13 | 241.13 | 241.12 |
| 240 | 241.12 | 241.12 | 241.12 | 241.12 | 241.11 |
| 245 | 241.11 | 241.11 | 241.11 | 241.11 | 241.10 |
| 250 | 241.10 | 241.10 | 241.10 | 241.09 | 241.09 |
| 255 | 241.09 | 241.09 | 241.09 | 241.08 | 241.08 |
| 260 | 241.08 | 241.08 | 241.07 | 241.07 | 241.07 |
| 265 | 241.07 | 241.07 | 241.06 | 241.06 | 241.06 |
| 270 | 241.06 | 241.05 | 241.05 | 241.05 | 241.05 |
| 275 | 241.05 | 241.04 | 241.04 | 241.04 | 241.04 |
| 280 | 241.04 | 241.03 | 241.03 | 241.03 | 241.03 |
| 285 | 241.02 | 241.02 | 241.02 | 241.02 | 241.02 |
| 290 | 241.01 | 241.01 | 241.01 | 241.01 | 241.01 |
| 295 | 241.00 | 241.00 | 241.00 | 241.00 | 240.99 |
| 300 | 240.99 | 240.99 | 240.99 | 240.99 | 240.98 |
| 305 | 240.98 | 240.98 | 240.98 | 240.97 | 240.97 |
| 310 | 240.97 | 240.97 | 240.97 | 240.96 | 240.96 |
| 315 | 240.96 | 240.96 | 240.96 | 240.95 | 240.95 |
| 320 | 240.95 | 240.95 | 240.94 | 240.94 | 240.94 |
| 325 | 240.94 | 240.94 | 240.93 | 240.93 | 240.93 |
| 330 | 240.93 | 240.93 | 240.92 | 240.92 | 240.92 |
| 335 | 240.92 | 240.91 | 240.91 | 240.91 | 240.91 |
| 340 | 240.91 | 240.90 | 240.90 | 240.90 | 240.90 |
| 345 | 240.90 | 240.89 | 240.89 | 240.89 | 240.89 |
| 350 | 240.88 | 240.88 | 240.88 | 240.88 | 240.88 |
| 355 | 240.87 | 240.87 | 240.87 | 240.87 | 240.87 |
| 360 | 240.86 | 240.86 | 240.86 | 240.86 | 240.85 |
| 365 | 240.85 | 240.85 | 240.85 | 240.85 | 240.84 |
| 370 | 240.84 | 240.84 | 240.84 | 240.84 | 240.83 |
| 375 | 240.83 | 240.83 | 240.83 | 240.82 | 240.82 |
| 380 | 240.82 | 240.82 | 240.82 | 240.81 | 240.81 |
| 385 | 240.81 | 240.81 | 240.81 | 240.80 | 240.80 |
| 390 | 240.80 | 240.80 | 240.80 | 240.79 | 240.79 |
| 395 | 240.79 | 240.79 | 240.78 | 240.78 | 240.78 |
| 400 | 240.78 | 240.78 | 240.77 | 240.77 | 240.77 |

# Basin 3C Drawdown

Subsection: Time vs. Elevation
Label: 1 (OUT)
Scenario: Drawdown

Return Event: 100 years
Storm Event:

**Time vs. Elevation (ft)**

**Output Time increment = 1 min**
**Time on left represents time for first value in each row.**

| Time (min) | Elevation (ft) | Elevation (ft) | Elevation (ft) | Elevation (ft) | Elevation (ft) |
|---|---|---|---|---|---|
| 405 | 240.77 | 240.77 | 240.76 | 240.76 | 240.76 |
| 410 | 240.76 | 240.75 | 240.75 | 240.75 | 240.75 |
| 415 | 240.75 | 240.74 | 240.74 | 240.74 | 240.74 |
| 420 | 240.74 | 240.73 | 240.73 | 240.73 | 240.73 |
| 425 | 240.73 | 240.72 | 240.72 | 240.72 | 240.72 |
| 430 | 240.71 | 240.71 | 240.71 | 240.71 | 240.71 |
| 435 | 240.70 | 240.70 | 240.70 | 240.70 | 240.70 |
| 440 | 240.69 | 240.69 | 240.69 | 240.69 | 240.69 |
| 445 | 240.68 | 240.68 | 240.68 | 240.68 | 240.68 |
| 450 | 240.67 | 240.67 | 240.67 | 240.67 | 240.66 |
| 455 | 240.66 | 240.66 | 240.66 | 240.66 | 240.65 |
| 460 | 240.65 | 240.65 | 240.65 | 240.65 | 240.64 |
| 465 | 240.64 | 240.64 | 240.64 | 240.64 | 240.63 |
| 470 | 240.63 | 240.63 | 240.63 | 240.63 | 240.62 |
| 475 | 240.62 | 240.62 | 240.62 | 240.61 | 240.61 |
| 480 | 240.61 | 240.61 | 240.61 | 240.60 | 240.60 |
| 485 | 240.60 | 240.60 | 240.60 | 240.59 | 240.59 |
| 490 | 240.59 | 240.59 | 240.59 | 240.58 | 240.58 |
| 495 | 240.58 | 240.58 | 240.58 | 240.57 | 240.57 |
| 500 | 240.57 | 240.57 | 240.57 | 240.56 | 240.56 |
| 505 | 240.56 | 240.56 | 240.55 | 240.55 | 240.55 |
| 510 | 240.55 | 240.55 | 240.54 | 240.54 | 240.54 |
| 515 | 240.54 | 240.54 | 240.53 | 240.53 | 240.53 |
| 520 | 240.53 | 240.53 | 240.52 | 240.52 | 240.52 |
| 525 | 240.52 | 240.52 | 240.51 | 240.51 | 240.51 |
| 530 | 240.51 | 240.51 | 240.50 | 240.50 | 240.50 |
| 535 | 240.50 | 240.50 | 240.49 | 240.49 | 240.49 |
| 540 | 240.49 | 240.49 | 240.48 | 240.48 | 240.48 |
| 545 | 240.48 | 240.48 | 240.47 | 240.47 | 240.47 |
| 550 | 240.47 | 240.47 | 240.46 | 240.46 | 240.46 |
| 555 | 240.46 | 240.46 | 240.45 | 240.45 | 240.45 |
| 560 | 240.45 | 240.45 | 240.44 | 240.44 | 240.44 |
| 565 | 240.44 | 240.44 | 240.43 | 240.43 | 240.43 |
| 570 | 240.43 | 240.43 | 240.42 | 240.42 | 240.42 |
| 575 | 240.42 | 240.42 | 240.41 | 240.41 | 240.41 |
| 580 | 240.41 | 240.41 | 240.40 | 240.40 | 240.40 |
| 585 | 240.40 | 240.40 | 240.39 | 240.39 | 240.39 |
| 590 | 240.39 | 240.39 | 240.38 | 240.38 | 240.38 |
| 595 | 240.38 | 240.38 | 240.37 | 240.37 | 240.37 |
| 600 | 240.37 | 240.37 | 240.36 | 240.36 | 240.36 |
| 605 | 240.36 | 240.36 | 240.35 | 240.35 | 240.35 |

# Basin 3C Drawdown

Subsection: Time vs. Elevation
Label: 1 (OUT)
Scenario: Drawdown

Return Event: 100 years
Storm Event:

**Time vs. Elevation (ft)**

**Output Time increment = 1 min**
**Time on left represents time for first value in each row.**

| Time (min) | Elevation (ft) | Elevation (ft) | Elevation (ft) | Elevation (ft) | Elevation (ft) |
|---|---|---|---|---|---|
| 610 | 240.35 | 240.35 | 240.34 | 240.34 | 240.34 |
| 615 | 240.34 | 240.34 | 240.33 | 240.33 | 240.33 |
| 620 | 240.33 | 240.33 | 240.32 | 240.32 | 240.32 |
| 625 | 240.32 | 240.32 | 240.31 | 240.31 | 240.31 |
| 630 | 240.31 | 240.31 | 240.30 | 240.30 | 240.30 |
| 635 | 240.30 | 240.30 | 240.29 | 240.29 | 240.29 |
| 640 | 240.29 | 240.29 | 240.28 | 240.28 | 240.28 |
| 645 | 240.28 | 240.28 | 240.28 | 240.27 | 240.27 |
| 650 | 240.27 | 240.27 | 240.27 | 240.26 | 240.26 |
| 655 | 240.26 | 240.26 | 240.26 | 240.25 | 240.25 |
| 660 | 240.25 | 240.25 | 240.25 | 240.24 | 240.24 |
| 665 | 240.24 | 240.24 | 240.24 | 240.23 | 240.23 |
| 670 | 240.23 | 240.23 | 240.23 | 240.23 | 240.22 |
| 675 | 240.22 | 240.22 | 240.22 | 240.22 | 240.21 |
| 680 | 240.21 | 240.21 | 240.21 | 240.21 | 240.20 |
| 685 | 240.20 | 240.20 | 240.20 | 240.20 | 240.19 |
| 690 | 240.19 | 240.19 | 240.19 | 240.19 | 240.19 |
| 695 | 240.18 | 240.18 | 240.18 | 240.18 | 240.18 |
| 700 | 240.17 | 240.17 | 240.17 | 240.17 | 240.17 |
| 705 | 240.16 | 240.16 | 240.16 | 240.16 | 240.16 |
| 710 | 240.15 | 240.15 | 240.15 | 240.15 | 240.15 |
| 715 | 240.15 | 240.14 | 240.14 | 240.14 | 240.14 |
| 720 | 240.14 | 240.13 | 240.13 | 240.13 | 240.13 |
| 725 | 240.13 | 240.13 | 240.12 | 240.12 | 240.12 |
| 730 | 240.12 | 240.12 | 240.11 | 240.11 | 240.11 |
| 735 | 240.11 | 240.11 | 240.10 | 240.10 | 240.10 |
| 740 | 240.10 | 240.10 | 240.10 | 240.09 | 240.09 |
| 745 | 240.09 | 240.09 | 240.09 | 240.08 | 240.08 |
| 750 | 240.08 | 240.08 | 240.08 | 240.08 | 240.07 |
| 755 | 240.07 | 240.07 | 240.07 | 240.07 | 240.06 |
| 760 | 240.06 | 240.06 | 240.06 | 240.06 | 240.06 |
| 765 | 240.05 | 240.05 | 240.05 | 240.05 | 240.05 |
| 770 | 240.04 | 240.04 | 240.04 | 240.04 | 240.04 |
| 775 | 240.04 | 240.03 | 240.03 | 240.03 | 240.03 |
| 780 | 240.03 | 240.02 | 240.02 | 240.02 | 240.02 |
| 785 | 240.02 | 240.02 | 240.01 | 240.01 | 240.01 |
| 790 | 240.01 | 240.01 | 240.01 | 240.00 | 240.00 |
| 795 | 240.00 | 240.00 | 240.00 | 239.99 | 239.99 |
| 800 | 239.99 | 239.99 | 239.99 | 239.99 | 239.98 |
| 805 | 239.98 | 239.98 | 239.98 | 239.98 | 239.98 |
| 810 | 239.97 | 239.97 | 239.97 | 239.97 | 239.97 |

# Basin 3C Drawdown

Subsection: Time vs. Elevation
Label: 1 (OUT)
Scenario: Drawdown

Return Event: 100 years
Storm Event:

**Time vs. Elevation (ft)**

**Output Time increment = 1 min**
**Time on left represents time for first value in each row.**

| Time (min) | Elevation (ft) | Elevation (ft) | Elevation (ft) | Elevation (ft) | Elevation (ft) |
|---|---|---|---|---|---|
| 815 | 239.97 | 239.96 | 239.96 | 239.96 | 239.96 |
| 820 | 239.96 | 239.96 | 239.95 | 239.95 | 239.95 |
| 825 | 239.95 | 239.95 | 239.94 | 239.94 | 239.94 |
| 830 | 239.94 | 239.94 | 239.94 | 239.93 | 239.93 |
| 835 | 239.93 | 239.93 | 239.93 | 239.93 | 239.92 |
| 840 | 239.92 | 239.92 | 239.92 | 239.92 | 239.92 |
| 845 | 239.91 | 239.91 | 239.91 | 239.91 | 239.91 |
| 850 | 239.91 | 239.91 | 239.90 | 239.90 | 239.90 |
| 855 | 239.90 | 239.90 | 239.90 | 239.89 | 239.89 |
| 860 | 239.89 | 239.89 | 239.89 | 239.89 | 239.88 |
| 865 | 239.88 | 239.88 | 239.88 | 239.88 | 239.88 |
| 870 | 239.87 | 239.87 | 239.87 | 239.87 | 239.87 |
| 875 | 239.87 | 239.86 | 239.86 | 239.86 | 239.86 |
| 880 | 239.86 | 239.86 | 239.86 | 239.85 | 239.85 |
| 885 | 239.85 | 239.85 | 239.85 | 239.85 | 239.84 |
| 890 | 239.84 | 239.84 | 239.84 | 239.84 | 239.84 |
| 895 | 239.84 | 239.83 | 239.83 | 239.83 | 239.83 |
| 900 | 239.83 | 239.83 | 239.82 | 239.82 | 239.82 |
| 905 | 239.82 | 239.82 | 239.82 | 239.82 | 239.81 |
| 910 | 239.81 | 239.81 | 239.81 | 239.81 | 239.81 |
| 915 | 239.81 | 239.80 | 239.80 | 239.80 | 239.80 |
| 920 | 239.80 | 239.80 | 239.79 | 239.79 | 239.79 |
| 925 | 239.79 | 239.79 | 239.79 | 239.79 | 239.78 |
| 930 | 239.78 | 239.78 | 239.78 | 239.78 | 239.78 |
| 935 | 239.78 | 239.77 | 239.77 | 239.77 | 239.77 |
| 940 | 239.77 | 239.77 | 239.77 | 239.76 | 239.76 |
| 945 | 239.76 | 239.76 | 239.76 | 239.76 | 239.76 |
| 950 | 239.75 | 239.75 | 239.75 | 239.75 | 239.75 |
| 955 | 239.75 | 239.75 | 239.74 | 239.74 | 239.74 |
| 960 | 239.74 | 239.74 | 239.74 | 239.74 | 239.73 |
| 965 | 239.73 | 239.73 | 239.73 | 239.73 | 239.73 |
| 970 | 239.72 | 239.72 | 239.72 | 239.72 | 239.72 |
| 975 | 239.72 | 239.72 | 239.71 | 239.71 | 239.71 |
| 980 | 239.71 | 239.71 | 239.71 | 239.71 | 239.70 |
| 985 | 239.70 | 239.70 | 239.70 | 239.70 | 239.70 |
| 990 | 239.70 | 239.69 | 239.69 | 239.69 | 239.69 |
| 995 | 239.69 | 239.69 | 239.69 | 239.68 | 239.68 |
| 1,000 | 239.68 | 239.68 | 239.68 | 239.68 | 239.68 |
| 1,005 | 239.67 | 239.67 | 239.67 | 239.67 | 239.67 |
| 1,010 | 239.67 | 239.67 | 239.66 | 239.66 | 239.66 |
| 1,015 | 239.66 | 239.66 | 239.66 | 239.66 | 239.65 |

# Basin 3C Drawdown

Subsection: Time vs. Elevation
Label: 1 (OUT)
Scenario: Drawdown

Return Event: 100 years
Storm Event:

**Time vs. Elevation (ft)**

**Output Time increment = 1 min**
**Time on left represents time for first value in each row.**

| Time (min) | Elevation (ft) | Elevation (ft) | Elevation (ft) | Elevation (ft) | Elevation (ft) |
|---|---|---|---|---|---|
| 1,020 | 239.65 | 239.65 | 239.65 | 239.65 | 239.65 |
| 1,025 | 239.64 | 239.64 | 239.64 | 239.64 | 239.64 |
| 1,030 | 239.64 | 239.64 | 239.63 | 239.63 | 239.63 |
| 1,035 | 239.63 | 239.63 | 239.63 | 239.63 | 239.62 |
| 1,040 | 239.62 | 239.62 | 239.62 | 239.62 | 239.62 |
| 1,045 | 239.62 | 239.61 | 239.61 | 239.61 | 239.61 |
| 1,050 | 239.61 | 239.61 | 239.61 | 239.60 | 239.60 |
| 1,055 | 239.60 | 239.60 | 239.60 | 239.60 | 239.60 |
| 1,060 | 239.59 | 239.59 | 239.59 | 239.59 | 239.59 |
| 1,065 | 239.59 | 239.59 | 239.58 | 239.58 | 239.58 |
| 1,070 | 239.58 | 239.58 | 239.58 | 239.58 | 239.57 |
| 1,075 | 239.57 | 239.57 | 239.57 | 239.57 | 239.57 |
| 1,080 | 239.57 | 239.56 | 239.56 | 239.56 | 239.56 |
| 1,085 | 239.56 | 239.56 | 239.56 | 239.55 | 239.55 |
| 1,090 | 239.55 | 239.55 | 239.55 | 239.55 | 239.55 |
| 1,095 | 239.54 | 239.54 | 239.54 | 239.54 | 239.54 |
| 1,100 | 239.54 | 239.54 | 239.53 | 239.53 | 239.53 |
| 1,105 | 239.53 | 239.53 | 239.53 | 239.52 | 239.52 |
| 1,110 | 239.52 | 239.52 | 239.52 | 239.52 | 239.52 |
| 1,115 | 239.51 | 239.51 | 239.51 | 239.51 | 239.51 |
| 1,120 | 239.51 | 239.51 | 239.50 | 239.50 | 239.50 |
| 1,125 | 239.50 | 239.50 | 239.50 | 239.50 | 239.49 |
| 1,130 | 239.49 | 239.49 | 239.49 | 239.49 | 239.49 |
| 1,135 | 239.49 | 239.48 | 239.48 | 239.48 | 239.48 |
| 1,140 | 239.48 | 239.48 | 239.48 | 239.47 | 239.47 |
| 1,145 | 239.47 | 239.47 | 239.47 | 239.47 | 239.47 |
| 1,150 | 239.46 | 239.46 | 239.46 | 239.46 | 239.46 |
| 1,155 | 239.46 | 239.46 | 239.45 | 239.45 | 239.45 |
| 1,160 | 239.45 | 239.45 | 239.45 | 239.45 | 239.44 |
| 1,165 | 239.44 | 239.44 | 239.44 | 239.44 | 239.44 |
| 1,170 | 239.44 | 239.43 | 239.43 | 239.43 | 239.43 |
| 1,175 | 239.43 | 239.43 | 239.43 | 239.42 | 239.42 |
| 1,180 | 239.42 | 239.42 | 239.42 | 239.42 | 239.42 |
| 1,185 | 239.41 | 239.41 | 239.41 | 239.41 | 239.41 |
| 1,190 | 239.41 | 239.41 | 239.40 | 239.40 | 239.40 |
| 1,195 | 239.40 | 239.40 | 239.40 | 239.40 | 239.39 |
| 1,200 | 239.39 | 239.39 | 239.39 | 239.39 | 239.39 |
| 1,205 | 239.38 | 239.38 | 239.38 | 239.38 | 239.38 |
| 1,210 | 239.38 | 239.38 | 239.37 | 239.37 | 239.37 |
| 1,215 | 239.37 | 239.37 | 239.37 | 239.37 | 239.36 |
| 1,220 | 239.36 | 239.36 | 239.36 | 239.36 | 239.36 |

# Basin 3C Drawdown

Subsection: Time vs. Elevation
Label: 1 (OUT)
Scenario: Drawdown

Return Event: 100 years
Storm Event:

**Time vs. Elevation (ft)**

**Output Time increment = 1 min**
**Time on left represents time for first value in each row.**

| Time (min) | Elevation (ft) | Elevation (ft) | Elevation (ft) | Elevation (ft) | Elevation (ft) |
|---|---|---|---|---|---|
| 1,225 | 239.36 | 239.35 | 239.35 | 239.35 | 239.35 |
| 1,230 | 239.35 | 239.35 | 239.35 | 239.34 | 239.34 |
| 1,235 | 239.34 | 239.34 | 239.34 | 239.34 | 239.34 |
| 1,240 | 239.33 | 239.33 | 239.33 | 239.33 | 239.33 |
| 1,245 | 239.33 | 239.33 | 239.32 | 239.32 | 239.32 |
| 1,250 | 239.32 | 239.32 | 239.32 | 239.32 | 239.31 |
| 1,255 | 239.31 | 239.31 | 239.31 | 239.31 | 239.31 |
| 1,260 | 239.31 | 239.30 | 239.30 | 239.30 | 239.30 |
| 1,265 | 239.30 | 239.30 | 239.30 | 239.29 | 239.29 |
| 1,270 | 239.29 | 239.29 | 239.29 | 239.29 | 239.29 |
| 1,275 | 239.28 | 239.28 | 239.28 | 239.28 | 239.28 |
| 1,280 | 239.28 | 239.28 | 239.27 | 239.27 | 239.27 |
| 1,285 | 239.27 | 239.27 | 239.27 | 239.27 | 239.26 |
| 1,290 | 239.26 | 239.26 | 239.26 | 239.26 | 239.26 |
| 1,295 | 239.26 | 239.25 | 239.25 | 239.25 | 239.25 |
| 1,300 | 239.25 | 239.25 | 239.25 | 239.24 | 239.24 |
| 1,305 | 239.24 | 239.24 | 239.24 | 239.24 | 239.24 |
| 1,310 | 239.23 | 239.23 | 239.23 | 239.23 | 239.23 |
| 1,315 | 239.23 | 239.23 | 239.22 | 239.22 | 239.22 |
| 1,320 | 239.22 | 239.22 | 239.22 | 239.22 | 239.21 |
| 1,325 | 239.21 | 239.21 | 239.21 | 239.21 | 239.21 |
| 1,330 | 239.21 | 239.20 | 239.20 | 239.20 | 239.20 |
| 1,335 | 239.20 | 239.20 | 239.20 | 239.19 | 239.19 |
| 1,340 | 239.19 | 239.19 | 239.19 | 239.19 | 239.19 |
| 1,345 | 239.18 | 239.18 | 239.18 | 239.18 | 239.18 |
| 1,350 | 239.18 | 239.18 | 239.17 | 239.17 | 239.17 |
| 1,355 | 239.17 | 239.17 | 239.17 | 239.16 | 239.16 |
| 1,360 | 239.16 | 239.16 | 239.16 | 239.16 | 239.16 |
| 1,365 | 239.15 | 239.15 | 239.15 | 239.15 | 239.15 |
| 1,370 | 239.15 | 239.15 | 239.14 | 239.14 | 239.14 |
| 1,375 | 239.14 | 239.14 | 239.14 | 239.14 | 239.13 |
| 1,380 | 239.13 | 239.13 | 239.13 | 239.13 | 239.13 |
| 1,385 | 239.13 | 239.12 | 239.12 | 239.12 | 239.12 |
| 1,390 | 239.12 | 239.12 | 239.12 | 239.11 | 239.11 |
| 1,395 | 239.11 | 239.11 | 239.11 | 239.11 | 239.11 |
| 1,400 | 239.11 | 239.10 | 239.10 | 239.10 | 239.10 |
| 1,405 | 239.10 | 239.10 | 239.10 | 239.09 | 239.09 |
| 1,410 | 239.09 | 239.09 | 239.09 | 239.09 | 239.08 |
| 1,415 | 239.08 | 239.08 | 239.08 | 239.08 | 239.08 |
| 1,420 | 239.08 | 239.07 | 239.07 | 239.07 | 239.07 |
| 1,425 | 239.07 | 239.07 | 239.07 | 239.06 | 239.06 |

# Basin 3C Drawdown

Subsection: Time vs. Elevation
Label: 1 (OUT)
Scenario: Drawdown

Return Event: 100 years
Storm Event:

**Time vs. Elevation (ft)**

**Output Time increment = 1 min**
**Time on left represents time for first value in each row.**

| Time (min) | Elevation (ft) | Elevation (ft) | Elevation (ft) | Elevation (ft) | Elevation (ft) |
|---|---|---|---|---|---|
| 1,430 | 239.06 | 239.06 | 239.06 | 239.06 | 239.06 |
| 1,435 | 239.05 | 239.05 | 239.05 | 239.05 | 239.05 |
| 1,440 | 239.05 | 239.05 | 239.04 | 239.04 | 239.04 |
| 1,445 | 239.04 | 239.04 | 239.04 | 239.04 | 239.03 |
| 1,450 | 239.03 | 239.03 | 239.03 | 239.03 | 239.03 |
| 1,455 | 239.03 | 239.03 | 239.02 | 239.02 | 239.02 |
| 1,460 | 239.02 | 239.02 | 239.02 | 239.02 | 239.01 |
| 1,465 | 239.01 | 239.01 | 239.01 | 239.01 | 239.01 |
| 1,470 | 239.01 | 239.00 | 239.00 | 239.00 | 238.99 |
| 1,475 | 238.95 | 238.91 | 238.20 | 237.44 | 236.88 |
| 1,480 | 236.51 | 236.34 | 236.30 | 236.28 | 236.27 |
| 1,485 | 236.27 | 236.26 | 236.26 | 236.26 | 236.25 |
| 1,490 | 236.25 | 236.25 | 236.25 | 236.25 | 236.25 |
| 1,495 | 236.25 | 236.25 | 236.25 | 236.25 | 236.25 |
| 1,500 | 236.25 | 236.25 | 236.25 | 236.25 | 236.25 |
| 1,505 | 236.25 | 236.25 | 236.25 | 236.25 | 236.25 |
| 1,510 | 236.25 | 236.25 | 236.25 | 236.25 | 236.25 |
| 1,515 | 236.25 | 236.25 | 236.25 | 236.25 | 236.25 |
| 1,520 | 236.25 | 236.25 | 236.25 | 236.25 | 236.25 |
| 1,525 | 236.25 | 236.25 | 236.25 | 236.25 | 236.25 |
| 1,530 | 236.25 | 236.25 | 236.25 | 236.25 | 236.25 |
| 1,535 | 236.25 | 236.25 | 236.25 | 236.25 | 236.25 |
| 1,540 | 236.25 | 236.25 | 236.25 | 236.25 | 236.25 |
| 1,545 | 236.25 | 236.25 | 236.25 | 236.25 | 236.25 |
| 1,550 | 236.25 | 236.25 | 236.25 | 236.25 | 236.25 |
| 1,555 | 236.25 | 236.25 | 236.25 | 236.25 | 236.25 |
| 1,560 | 236.25 | 236.25 | 236.25 | 236.25 | 236.25 |
| 1,565 | 236.25 | 236.25 | 236.25 | 236.25 | 236.25 |
| 1,570 | 236.25 | 236.25 | 236.25 | 236.25 | 236.25 |
| 1,575 | 236.25 | 236.25 | 236.25 | 236.25 | 236.25 |
| 1,580 | 236.25 | 236.25 | 236.25 | 236.25 | 236.25 |
| 1,585 | 236.25 | 236.25 | 236.25 | 236.25 | 236.25 |
| 1,590 | 236.25 | 236.25 | 236.25 | 236.25 | 236.25 |
| 1,595 | 236.25 | 236.25 | 236.25 | 236.25 | 236.25 |
| 1,600 | 236.25 | 236.25 | 236.25 | 236.25 | 236.25 |
| 1,605 | 236.25 | 236.25 | 236.25 | 236.25 | 236.25 |
| 1,610 | 236.25 | 236.25 | 236.25 | 236.25 | 236.25 |
| 1,615 | 236.25 | 236.25 | 236.25 | 236.25 | 236.25 |
| 1,620 | 236.25 | 236.25 | 236.25 | 236.25 | 236.25 |
| 1,625 | 236.25 | 236.25 | 236.25 | 236.25 | 236.25 |
| 1,630 | 236.25 | 236.25 | 236.25 | 236.25 | 236.25 |

# Basin 3C Drawdown

Subsection: Time vs. Elevation
Label: 1 (OUT)
Scenario: Drawdown

Return Event: 100 years
Storm Event:

**Time vs. Elevation (ft)**

**Output Time increment = 1 min**
**Time on left represents time for first value in each row.**

| Time (min) | Elevation (ft) | Elevation (ft) | Elevation (ft) | Elevation (ft) | Elevation (ft) |
|---|---|---|---|---|---|
| 1,635 | 236.25 | 236.25 | 236.25 | 236.25 | 236.25 |
| 1,640 | 236.25 | 236.25 | 236.25 | 236.25 | 236.25 |
| 1,645 | 236.25 | 236.25 | 236.25 | 236.25 | 236.25 |
| 1,650 | 236.25 | 236.25 | 236.25 | 236.25 | 236.25 |
| 1,655 | 236.25 | 236.25 | 236.25 | 236.25 | 236.25 |
| 1,660 | 236.25 | 236.25 | 236.25 | 236.25 | 236.25 |
| 1,665 | 236.25 | 236.25 | 236.25 | 236.25 | 236.25 |
| 1,670 | 236.25 | 236.25 | 236.25 | 236.25 | 236.25 |
| 1,675 | 236.25 | 236.25 | 236.25 | 236.25 | 236.25 |
| 1,680 | 236.25 | 236.25 | 236.25 | 236.25 | 236.25 |
| 1,685 | 236.25 | 236.25 | 236.25 | 236.25 | 236.25 |
| 1,690 | 236.25 | 236.25 | 236.25 | 236.25 | 236.25 |
| 1,695 | 236.25 | 236.25 | 236.25 | 236.25 | 236.25 |
| 1,700 | 236.25 | 236.25 | 236.25 | 236.25 | 236.25 |
| 1,705 | 236.25 | 236.25 | 236.25 | 236.25 | 236.25 |
| 1,710 | 236.25 | 236.25 | 236.25 | 236.25 | 236.25 |
| 1,715 | 236.25 | 236.25 | 236.25 | 236.25 | 236.25 |
| 1,720 | 236.25 | 236.25 | 236.25 | 236.25 | 236.25 |
| 1,725 | 236.25 | 236.25 | 236.25 | 236.25 | 236.25 |
| 1,730 | 236.25 | 236.25 | 236.25 | 236.25 | 236.25 |
| 1,735 | 236.25 | 236.25 | 236.25 | 236.25 | 236.25 |
| 1,740 | 236.25 | 236.25 | 236.25 | 236.25 | 236.25 |
| 1,745 | 236.25 | 236.25 | 236.25 | 236.25 | 236.25 |
| 1,750 | 236.25 | 236.25 | 236.25 | 236.25 | 236.25 |
| 1,755 | 236.25 | 236.25 | 236.25 | 236.25 | 236.25 |
| 1,760 | 236.25 | 236.25 | 236.25 | 236.25 | 236.25 |
| 1,765 | 236.25 | 236.25 | 236.25 | 236.25 | 236.25 |
| 1,770 | 236.25 | 236.25 | 236.25 | 236.25 | 236.25 |
| 1,775 | 236.25 | 236.25 | 236.25 | 236.25 | 236.25 |
| 1,780 | 236.25 | 236.25 | 236.25 | 236.25 | 236.25 |
| 1,785 | 236.25 | 236.25 | 236.25 | 236.25 | 236.25 |
| 1,790 | 236.25 | 236.25 | 236.25 | 236.25 | 236.25 |
| 1,795 | 236.25 | 236.25 | 236.25 | 236.25 | 236.25 |
| 1,800 | 236.25 | 236.25 | 236.25 | 236.25 | 236.25 |
| 1,805 | 236.25 | 236.25 | 236.25 | 236.25 | 236.25 |
| 1,810 | 236.25 | 236.25 | 236.25 | 236.25 | 236.25 |
| 1,815 | 236.25 | 236.25 | 236.25 | 236.25 | 236.25 |
| 1,820 | 236.25 | 236.25 | 236.25 | 236.25 | 236.25 |
| 1,825 | 236.25 | 236.25 | 236.25 | 236.25 | 236.25 |
| 1,830 | 236.25 | 236.25 | 236.25 | 236.25 | 236.25 |
| 1,835 | 236.25 | 236.25 | 236.25 | 236.25 | 236.25 |

# Basin 3C Drawdown

Subsection: Time vs. Elevation
Label: 1 (OUT)
Scenario: Drawdown

Return Event: 100 years
Storm Event:

**Time vs. Elevation (ft)**

**Output Time increment = 1 min**
**Time on left represents time for first value in each row.**

| Time (min) | Elevation (ft) | Elevation (ft) | Elevation (ft) | Elevation (ft) | Elevation (ft) |
|---|---|---|---|---|---|
| 1,840 | 236.25 | 236.25 | 236.25 | 236.25 | 236.25 |
| 1,845 | 236.25 | 236.25 | 236.25 | 236.25 | 236.25 |
| 1,850 | 236.25 | 236.25 | 236.25 | 236.25 | 236.25 |
| 1,855 | 236.25 | 236.25 | 236.25 | 236.25 | 236.25 |
| 1,860 | 236.25 | 236.25 | 236.25 | 236.25 | 236.25 |
| 1,865 | 236.25 | 236.25 | 236.25 | 236.25 | 236.25 |
| 1,870 | 236.25 | 236.25 | 236.25 | 236.25 | 236.25 |
| 1,875 | 236.25 | 236.25 | 236.25 | 236.25 | 236.25 |
| 1,880 | 236.25 | 236.25 | 236.25 | 236.25 | 236.25 |
| 1,885 | 236.25 | 236.25 | 236.25 | 236.25 | 236.25 |
| 1,890 | 236.25 | 236.25 | 236.25 | 236.25 | 236.25 |
| 1,895 | 236.25 | 236.25 | 236.25 | 236.25 | 236.25 |
| 1,900 | 236.25 | 236.25 | 236.25 | 236.25 | 236.25 |
| 1,905 | 236.25 | 236.25 | 236.25 | 236.25 | 236.25 |
| 1,910 | 236.25 | 236.25 | 236.25 | 236.25 | 236.25 |
| 1,915 | 236.25 | 236.25 | 236.25 | 236.25 | 236.25 |
| 1,920 | 236.25 | 236.25 | 236.25 | 236.25 | 236.25 |
| 1,925 | 236.25 | 236.25 | 236.25 | 236.25 | 236.25 |
| 1,930 | 236.25 | 236.25 | 236.25 | 236.25 | 236.25 |
| 1,935 | 236.25 | 236.25 | 236.25 | 236.25 | 236.25 |
| 1,940 | 236.25 | 236.25 | 236.25 | 236.25 | 236.25 |
| 1,945 | 236.25 | 236.25 | 236.25 | 236.25 | 236.25 |
| 1,950 | 236.25 | 236.25 | 236.25 | 236.25 | 236.25 |
| 1,955 | 236.25 | 236.25 | 236.25 | 236.25 | 236.25 |
| 1,960 | 236.25 | 236.25 | 236.25 | 236.25 | 236.25 |
| 1,965 | 236.25 | 236.25 | 236.25 | 236.25 | 236.25 |
| 1,970 | 236.25 | 236.25 | 236.25 | 236.25 | 236.25 |
| 1,975 | 236.25 | 236.25 | 236.25 | 236.25 | 236.25 |
| 1,980 | 236.25 | 236.25 | 236.25 | 236.25 | 236.25 |
| 1,985 | 236.25 | 236.25 | 236.25 | 236.25 | 236.25 |
| 1,990 | 236.25 | 236.25 | 236.25 | 236.25 | 236.25 |
| 1,995 | 236.25 | 236.25 | 236.25 | 236.25 | 236.25 |
| 2,000 | 236.25 | (N/A) | (N/A) | (N/A) | (N/A) |

# Basin 3C Drawdown

Subsection: Outlet Input Data
Label: Outlet#1
Scenario: Drawdown

Return Event: 100 years
Storm Event:

| Requested Pond Water Surface Elevations | |
|---|---|
| Minimum (Headwater) | 236.00 ft |
| Increment (Headwater) | 0.10 ft |
| Maximum (Headwater) | 244.00 ft |

## Outlet Connectivity

| Structure Type | Outlet ID | Direction | Outfall | E1 (ft) | E2 (ft) |
|---|---|---|---|---|---|
| Orifice-Circular | Orifice - LF | Forward | TW | 239.75 | 244.00 |
| Orifice-Circular | Orifice - HF | Forward | TW | 241.25 | 244.00 |
| Inlet Box | Riser - 1 | Forward | TW | 242.75 | 244.00 |
| Orifice-Circular | Orifice - Underdrain | Forward | TW | 0.00 | 244.00 |
| Tailwater Settings | Tailwater | | | (N/A) | (N/A) |

# Basin 3C Drawdown

Subsection: Outlet Input Data
Label: Outlet#1
Scenario: Drawdown

Return Event: 100 years
Storm Event:

| Structure ID: Orifice - LF<br>Structure Type: Orifice-Circular | |
|---|---|
| Number of Openings | 1 |
| Elevation | 239.75 ft |
| Orifice Diameter | 2.0 in |
| Orifice Coefficient | 0.600 |

| Structure ID: Riser - 1<br>Structure Type: Inlet Box | |
|---|---|
| Number of Openings | 1 |
| Elevation | 242.75 ft |
| Orifice Area | 4.7 ft² |
| Orifice Coefficient | 0.600 |
| Weir Length | 9.20 ft |
| Weir Coefficient | 3.00 (ft^0.5)/s |
| K Reverse | 1.000 |
| Manning's n | 0.000 |
| Kev, Charged Riser | 0.000 |
| Weir Submergence | False |
| Orifice H to crest | True |

| Structure ID: Orifice - HF<br>Structure Type: Orifice-Circular | |
|---|---|
| Number of Openings | 5 |
| Elevation | 241.25 ft |
| Orifice Diameter | 5.0 in |
| Orifice Coefficient | 0.600 |

| Structure ID: Orifice - Underdrain<br>Structure Type: Orifice-Circular | |
|---|---|
| Number of Openings | 1 |
| Elevation | 236.25 ft |
| Orifice Diameter | 2.0 in |
| Orifice Coefficient | 0.600 |

| Structure ID: TW<br>Structure Type: TW Setup, DS Channel | |
|---|---|
| Tailwater Type | Free Outfall |

| Convergence Tolerances | |
|---|---|
| Maximum Iterations | 80 |

# Basin 3C Drawdown

Subsection: Outlet Input Data
Label: Outlet#1
Scenario: Drawdown

Return Event: 100 years
Storm Event:

| Convergence Tolerances | |
|---|---|
| Tailwater Tolerance (Minimum) | 0.01 ft |
| Tailwater Tolerance (Maximum) | 0.10 ft |
| Headwater Tolerance (Minimum) | 0.01 ft |
| Headwater Tolerance (Maximum) | 0.10 ft |
| Flow Tolerance (Minimum) | 0.001 ft³/s |
| Flow Tolerance (Maximum) | 10.000 ft³/s |

# Basin 3C Drawdown

Subsection: Elevation-Volume-Flow Table (Pond)
Label: 1
Scenario: Drawdown

Return Event: 100 years
Storm Event:

| Infiltration | |
|---|---|
| Infiltration Method (Computed) | No Infiltration |

| Initial Conditions | |
|---|---|
| Elevation (Water Surface, Initial) | 244.00 ft |
| Volume (Initial) | 1.157 ac-ft |
| Flow (Initial Outlet) | 31.03 ft³/s |
| Flow (Initial Infiltration) | 0.00 ft³/s |
| Flow (Initial, Total) | 31.03 ft³/s |
| Time Increment | 1 min |

| Elevation (ft) | Outflow (ft³/s) | Storage (ac-ft) | Area (ft²) | Infiltration (ft³/s) | Flow (Total) (ft³/s) | 2S/t + O (ft³/s) |
|---|---|---|---|---|---|---|
| 236.00 | 0.00 | 0.000 | 10.000 | 0.00 | 0.00 | 0.00 |
| 236.10 | 0.00 | 0.000 | 10.000 | 0.00 | 0.00 | 0.03 |
| 236.20 | 0.00 | 0.000 | 10.000 | 0.00 | 0.00 | 0.07 |
| 236.25 | 0.00 | 0.000 | 10.000 | 0.00 | 0.00 | 0.08 |
| 236.30 | 0.00 | 0.000 | 10.000 | 0.00 | 0.00 | 0.10 |
| 236.40 | 0.02 | 0.000 | 10.000 | 0.00 | 0.02 | 0.16 |
| 236.50 | 0.04 | 0.000 | 10.000 | 0.00 | 0.04 | 0.21 |
| 236.60 | 0.05 | 0.000 | 10.000 | 0.00 | 0.05 | 0.25 |
| 236.70 | 0.06 | 0.000 | 10.000 | 0.00 | 0.06 | 0.30 |
| 236.80 | 0.07 | 0.000 | 10.000 | 0.00 | 0.07 | 0.34 |
| 236.90 | 0.08 | 0.000 | 10.000 | 0.00 | 0.08 | 0.38 |
| 237.00 | 0.09 | 0.000 | 10.000 | 0.00 | 0.09 | 0.42 |
| 237.10 | 0.09 | 0.000 | 10.000 | 0.00 | 0.09 | 0.46 |
| 237.20 | 0.10 | 0.000 | 10.000 | 0.00 | 0.10 | 0.50 |
| 237.30 | 0.10 | 0.000 | 10.000 | 0.00 | 0.10 | 0.54 |
| 237.40 | 0.11 | 0.000 | 10.000 | 0.00 | 0.11 | 0.58 |
| 237.50 | 0.11 | 0.000 | 10.000 | 0.00 | 0.11 | 0.61 |
| 237.60 | 0.12 | 0.000 | 10.000 | 0.00 | 0.12 | 0.65 |
| 237.70 | 0.12 | 0.000 | 10.000 | 0.00 | 0.12 | 0.69 |
| 237.80 | 0.13 | 0.000 | 10.000 | 0.00 | 0.13 | 0.73 |
| 237.90 | 0.13 | 0.000 | 10.000 | 0.00 | 0.13 | 0.76 |
| 238.00 | 0.14 | 0.000 | 10.000 | 0.00 | 0.14 | 0.80 |
| 238.10 | 0.14 | 0.000 | 10.000 | 0.00 | 0.14 | 0.84 |
| 238.20 | 0.14 | 0.001 | 10.000 | 0.00 | 0.14 | 0.88 |
| 238.30 | 0.15 | 0.001 | 10.000 | 0.00 | 0.15 | 0.91 |
| 238.40 | 0.15 | 0.001 | 10.000 | 0.00 | 0.15 | 0.95 |
| 238.50 | 0.15 | 0.001 | 10.000 | 0.00 | 0.15 | 0.99 |
| 238.60 | 0.16 | 0.001 | 10.000 | 0.00 | 0.16 | 1.02 |
| 238.70 | 0.16 | 0.001 | 10.000 | 0.00 | 0.16 | 1.06 |

# Basin 3C Drawdown

Subsection: Elevation-Volume-Flow Table (Pond) Return Event: 100 years
Label: 1 Storm Event:
Scenario: Drawdown

| Elevation (ft) | Outflow (ft³/s) | Storage (ac-ft) | Area (ft²) | Infiltration (ft³/s) | Flow (Total) (ft³/s) | 2S/t + O (ft³/s) |
|---|---|---|---|---|---|---|
| 238.80 | 0.16 | 0.001 | 10.000 | 0.00 | 0.16 | 1.10 |
| 238.90 | 0.17 | 0.001 | 10.000 | 0.00 | 0.17 | 1.13 |
| 239.00 | 0.17 | 0.001 | 7,232.000 | 0.00 | 0.17 | 2.00 |
| 239.10 | 0.17 | 0.018 | 7,335.679 | 0.00 | 0.17 | 26.29 |
| 239.20 | 0.18 | 0.035 | 7,440.097 | 0.00 | 0.18 | 50.91 |
| 239.30 | 0.18 | 0.052 | 7,545.252 | 0.00 | 0.18 | 75.89 |
| 239.40 | 0.18 | 0.070 | 7,651.145 | 0.00 | 0.18 | 101.22 |
| 239.50 | 0.19 | 0.087 | 7,757.776 | 0.00 | 0.19 | 126.91 |
| 239.60 | 0.19 | 0.105 | 7,865.145 | 0.00 | 0.19 | 152.95 |
| 239.70 | 0.19 | 0.123 | 7,973.252 | 0.00 | 0.19 | 179.35 |
| 239.75 | 0.19 | 0.133 | 8,027.582 | 0.00 | 0.19 | 192.68 |
| 239.80 | 0.20 | 0.142 | 8,082.097 | 0.00 | 0.20 | 206.11 |
| 239.90 | 0.22 | 0.160 | 8,191.679 | 0.00 | 0.22 | 233.26 |
| 240.00 | 0.24 | 0.179 | 8,302.000 | 0.00 | 0.24 | 260.77 |
| 240.10 | 0.26 | 0.199 | 8,411.473 | 0.00 | 0.26 | 288.64 |
| 240.20 | 0.27 | 0.218 | 8,521.664 | 0.00 | 0.27 | 316.87 |
| 240.30 | 0.28 | 0.238 | 8,632.571 | 0.00 | 0.28 | 345.47 |
| 240.40 | 0.29 | 0.258 | 8,744.195 | 0.00 | 0.29 | 374.45 |
| 240.50 | 0.30 | 0.278 | 8,856.537 | 0.00 | 0.30 | 403.79 |
| 240.60 | 0.31 | 0.298 | 8,969.595 | 0.00 | 0.31 | 433.51 |
| 240.70 | 0.32 | 0.319 | 9,083.371 | 0.00 | 0.32 | 463.60 |
| 240.80 | 0.33 | 0.340 | 9,197.864 | 0.00 | 0.33 | 494.08 |
| 240.90 | 0.33 | 0.361 | 9,313.073 | 0.00 | 0.33 | 524.94 |
| 241.00 | 0.34 | 0.383 | 9,429.000 | 0.00 | 0.34 | 556.18 |
| 241.10 | 0.35 | 0.405 | 9,544.250 | 0.00 | 0.35 | 587.81 |
| 241.20 | 0.35 | 0.427 | 9,660.199 | 0.00 | 0.35 | 619.83 |
| 241.25 | 0.36 | 0.438 | 9,718.437 | 0.00 | 0.36 | 635.98 |
| 241.30 | 0.39 | 0.449 | 9,776.849 | 0.00 | 0.39 | 652.26 |
| 241.40 | 0.60 | 0.472 | 9,894.199 | 0.00 | 0.60 | 685.25 |
| 241.50 | 0.97 | 0.494 | 10,012.249 | 0.00 | 0.97 | 718.80 |
| 241.60 | 1.47 | 0.517 | 10,130.999 | 0.00 | 1.47 | 752.87 |
| 241.70 | 2.00 | 0.541 | 10,250.449 | 0.00 | 2.00 | 787.37 |
| 241.80 | 2.31 | 0.565 | 10,370.599 | 0.00 | 2.31 | 822.05 |
| 241.90 | 2.58 | 0.589 | 10,491.450 | 0.00 | 2.58 | 857.09 |
| 242.00 | 2.82 | 0.613 | 10,613.000 | 0.00 | 2.82 | 892.50 |
| 242.10 | 3.04 | 0.637 | 10,733.918 | 0.00 | 3.04 | 928.30 |
| 242.20 | 3.24 | 0.662 | 10,855.521 | 0.00 | 3.24 | 964.48 |
| 242.30 | 3.43 | 0.687 | 10,977.808 | 0.00 | 3.43 | 1,001.06 |
| 242.40 | 3.61 | 0.712 | 11,100.781 | 0.00 | 3.61 | 1,038.04 |
| 242.50 | 3.78 | 0.738 | 11,224.438 | 0.00 | 3.78 | 1,075.42 |
| 242.60 | 3.94 | 0.764 | 11,348.781 | 0.00 | 3.94 | 1,113.20 |
| 242.70 | 4.10 | 0.790 | 11,473.808 | 0.00 | 4.10 | 1,151.40 |
| 242.75 | 4.17 | 0.803 | 11,536.579 | 0.00 | 4.17 | 1,170.65 |

# Basin 3C Drawdown

Subsection: Elevation-Volume-Flow Table (Pond) Return Event: 100 years
Label: 1 Storm Event:
Scenario: Drawdown

| Elevation (ft) | Outflow (ft³/s) | Storage (ac-ft) | Area (ft²) | Infiltration (ft³/s) | Flow (Total) (ft³/s) | 2S/t + O (ft³/s) |
|---|---|---|---|---|---|---|
| 242.80 | 4.56 | 0.817 | 11,599.521 | 0.00 | 4.56 | 1,190.31 |
| 242.90 | 6.00 | 0.843 | 11,725.918 | 0.00 | 6.00 | 1,230.62 |
| 243.00 | 7.98 | 0.870 | 11,853.000 | 0.00 | 7.98 | 1,271.91 |
| 243.10 | 10.38 | 0.898 | 11,980.338 | 0.00 | 10.38 | 1,314.03 |
| 243.20 | 13.13 | 0.925 | 12,108.357 | 0.00 | 13.13 | 1,356.93 |
| 243.30 | 16.18 | 0.953 | 12,237.056 | 0.00 | 16.18 | 1,400.55 |
| 243.40 | 19.51 | 0.982 | 12,366.436 | 0.00 | 19.51 | 1,444.89 |
| 243.50 | 23.10 | 1.010 | 12,496.496 | 0.00 | 23.10 | 1,489.91 |
| 243.60 | 26.14 | 1.039 | 12,627.236 | 0.00 | 26.14 | 1,534.83 |
| 243.70 | 27.45 | 1.068 | 12,758.656 | 0.00 | 27.45 | 1,578.45 |
| 243.80 | 28.70 | 1.098 | 12,890.757 | 0.00 | 28.70 | 1,622.44 |
| 243.90 | 29.89 | 1.127 | 13,023.538 | 0.00 | 29.89 | 1,666.82 |
| 244.00 | 31.03 | 1.157 | 13,157.000 | 0.00 | 31.03 | 1,711.60 |

# Basin 3C Drawdown

## Index

1

1 (Elevation-Volume-Flow Table (Pond))...

1 (Elevation-Volume-Flow Table (Pond), 100 years (Drawdown))...14, 15, 16

1 (OUT) (Time vs. Elevation)...

1 (OUT) (Time vs. Elevation, 100 years (Drawdown))...1, 2, 3, 4, 5, 6, 7, 8, 9, 10

O

Outlet#1 (Outlet Input Data)...

Outlet#1 (Outlet Input Data, 100 years (Drawdown))...11, 12, 13

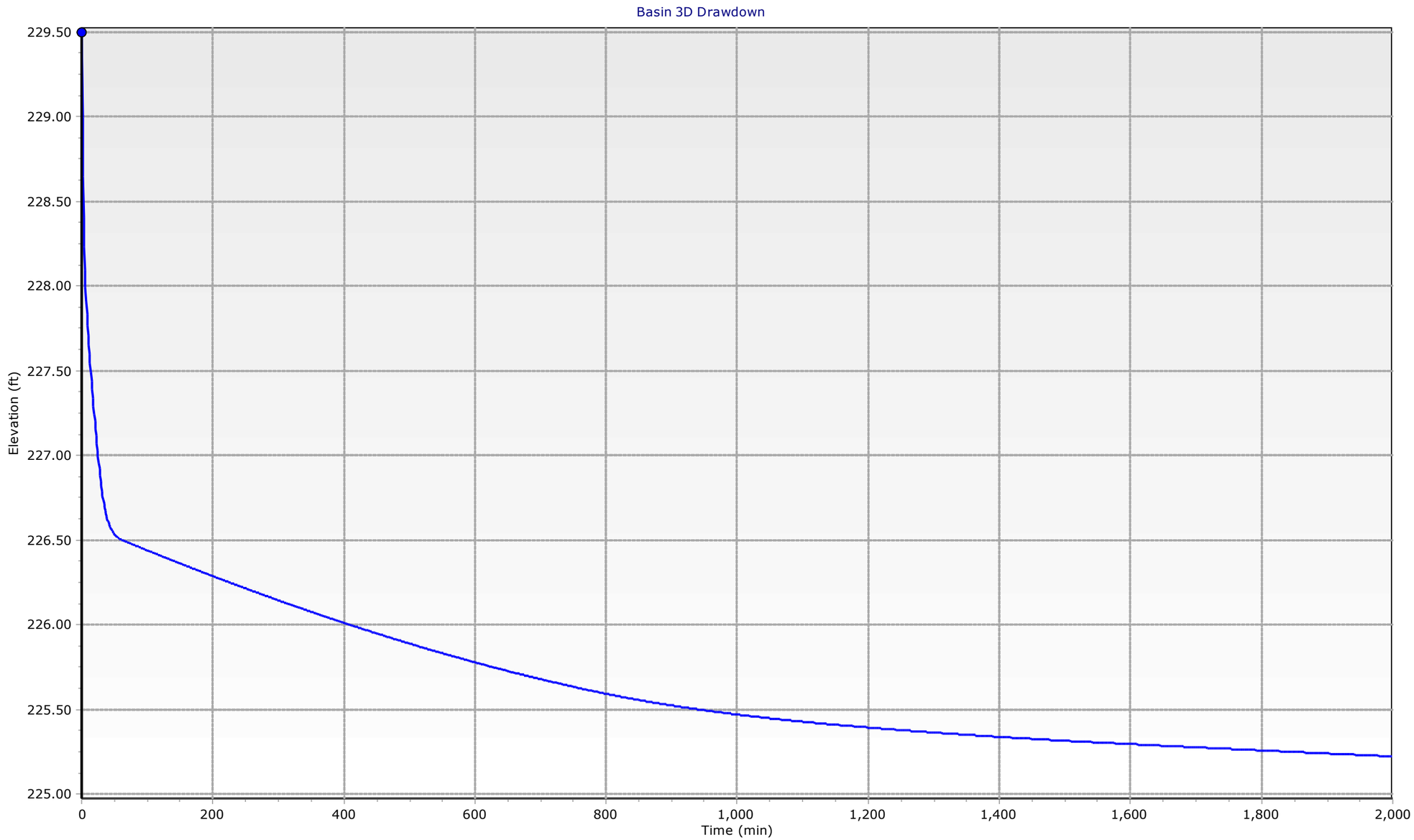
Basin 3D Drawdown
229.50
229.00
228.50
228.00
227.50
227.00
226.50
226.00
225.50
225.00
Elevation (ft)
0
200
400
600
800
1,000
1,200
1,400
1,600
1,800
2,000
Time (min)
1 - Drawdown - Elevation

# Table of Contents


| | | |
|---|---|---|
| 1 (OUT) | Time vs. Elevation | 1 |
| Outlet#1 w Underdrain | Outlet Input Data | 11 |
| 1 | Elevation-Volume-Flow Table (Pond) | 14 |

# Basin 3D Drawdown

Subsection: Time vs. Elevation
Label: 1 (OUT)
Scenario: Drawdown

Return Event: 100 years
Storm Event:

## Time vs. Elevation (ft)

**Output Time increment = 1 min**
**Time on left represents time for first value in each row.**

| Time (min) | Elevation (ft) | Elevation (ft) | Elevation (ft) | Elevation (ft) | Elevation (ft) |
|---|---|---|---|---|---|
| 0 | 229.50 | 229.00 | 228.66 | 228.42 | 228.25 |
| 5 | 228.12 | 228.01 | 227.93 | 227.85 | 227.79 |
| 10 | 227.73 | 227.67 | 227.61 | 227.56 | 227.50 |
| 15 | 227.45 | 227.40 | 227.34 | 227.29 | 227.25 |
| 20 | 227.20 | 227.15 | 227.11 | 227.06 | 227.02 |
| 25 | 226.98 | 226.94 | 226.90 | 226.86 | 226.82 |
| 30 | 226.79 | 226.75 | 226.72 | 226.69 | 226.67 |
| 35 | 226.64 | 226.62 | 226.60 | 226.58 | 226.56 |
| 40 | 226.54 | 226.53 | 226.52 | 226.51 | 226.49 |
| 45 | 226.48 | 226.48 | 226.47 | 226.46 | 226.45 |
| 50 | 226.45 | 226.44 | 226.44 | 226.43 | 226.43 |
| 55 | 226.42 | 226.42 | 226.42 | 226.42 | 226.41 |
| 60 | 226.41 | 226.41 | 226.41 | 226.40 | 226.40 |
| 65 | 226.40 | 226.40 | 226.40 | 226.40 | 226.40 |
| 70 | 226.40 | 226.39 | 226.39 | 226.39 | 226.39 |
| 75 | 226.39 | 226.39 | 226.39 | 226.39 | 226.38 |
| 80 | 226.38 | 226.38 | 226.38 | 226.38 | 226.38 |
| 85 | 226.38 | 226.38 | 226.37 | 226.37 | 226.37 |
| 90 | 226.37 | 226.37 | 226.37 | 226.37 | 226.37 |
| 95 | 226.36 | 226.36 | 226.36 | 226.36 | 226.36 |
| 100 | 226.36 | 226.36 | 226.36 | 226.35 | 226.35 |
| 105 | 226.35 | 226.35 | 226.35 | 226.35 | 226.35 |
| 110 | 226.35 | 226.34 | 226.34 | 226.34 | 226.34 |
| 115 | 226.34 | 226.34 | 226.34 | 226.34 | 226.34 |
| 120 | 226.33 | 226.33 | 226.33 | 226.33 | 226.33 |
| 125 | 226.33 | 226.33 | 226.33 | 226.32 | 226.32 |
| 130 | 226.32 | 226.32 | 226.32 | 226.32 | 226.32 |
| 135 | 226.32 | 226.31 | 226.31 | 226.31 | 226.31 |
| 140 | 226.31 | 226.31 | 226.31 | 226.31 | 226.31 |
| 145 | 226.30 | 226.30 | 226.30 | 226.30 | 226.30 |
| 150 | 226.30 | 226.30 | 226.30 | 226.29 | 226.29 |
| 155 | 226.29 | 226.29 | 226.29 | 226.29 | 226.29 |
| 160 | 226.29 | 226.28 | 226.28 | 226.28 | 226.28 |
| 165 | 226.28 | 226.28 | 226.28 | 226.28 | 226.28 |
| 170 | 226.27 | 226.27 | 226.27 | 226.27 | 226.27 |
| 175 | 226.27 | 226.27 | 226.27 | 226.26 | 226.26 |
| 180 | 226.26 | 226.26 | 226.26 | 226.26 | 226.26 |
| 185 | 226.26 | 226.26 | 226.25 | 226.25 | 226.25 |
| 190 | 226.25 | 226.25 | 226.25 | 226.25 | 226.25 |
| 195 | 226.24 | 226.24 | 226.24 | 226.24 | 226.24 |

# Basin 3D Drawdown

Subsection: Time vs. Elevation
Label: 1 (OUT)
Scenario: Drawdown

Return Event: 100 years
Storm Event:

**Time vs. Elevation (ft)**

**Output Time increment = 1 min**
**Time on left represents time for first value in each row.**

| Time (min) | Elevation (ft) | Elevation (ft) | Elevation (ft) | Elevation (ft) | Elevation (ft) |
|---|---|---|---|---|---|
| 200 | 226.24 | 226.24 | 226.24 | 226.24 | 226.23 |
| 205 | 226.23 | 226.23 | 226.23 | 226.23 | 226.23 |
| 210 | 226.23 | 226.23 | 226.23 | 226.22 | 226.22 |
| 215 | 226.22 | 226.22 | 226.22 | 226.22 | 226.22 |
| 220 | 226.22 | 226.21 | 226.21 | 226.21 | 226.21 |
| 225 | 226.21 | 226.21 | 226.21 | 226.21 | 226.21 |
| 230 | 226.20 | 226.20 | 226.20 | 226.20 | 226.20 |
| 235 | 226.20 | 226.20 | 226.20 | 226.20 | 226.19 |
| 240 | 226.19 | 226.19 | 226.19 | 226.19 | 226.19 |
| 245 | 226.19 | 226.19 | 226.19 | 226.18 | 226.18 |
| 250 | 226.18 | 226.18 | 226.18 | 226.18 | 226.18 |
| 255 | 226.18 | 226.17 | 226.17 | 226.17 | 226.17 |
| 260 | 226.17 | 226.17 | 226.17 | 226.17 | 226.17 |
| 265 | 226.16 | 226.16 | 226.16 | 226.16 | 226.16 |
| 270 | 226.16 | 226.16 | 226.16 | 226.16 | 226.15 |
| 275 | 226.15 | 226.15 | 226.15 | 226.15 | 226.15 |
| 280 | 226.15 | 226.15 | 226.15 | 226.14 | 226.14 |
| 285 | 226.14 | 226.14 | 226.14 | 226.14 | 226.14 |
| 290 | 226.14 | 226.14 | 226.13 | 226.13 | 226.13 |
| 295 | 226.13 | 226.13 | 226.13 | 226.13 | 226.13 |
| 300 | 226.13 | 226.12 | 226.12 | 226.12 | 226.12 |
| 305 | 226.12 | 226.12 | 226.12 | 226.12 | 226.12 |
| 310 | 226.11 | 226.11 | 226.11 | 226.11 | 226.11 |
| 315 | 226.11 | 226.11 | 226.11 | 226.11 | 226.10 |
| 320 | 226.10 | 226.10 | 226.10 | 226.10 | 226.10 |
| 325 | 226.10 | 226.10 | 226.10 | 226.10 | 226.09 |
| 330 | 226.09 | 226.09 | 226.09 | 226.09 | 226.09 |
| 335 | 226.09 | 226.09 | 226.09 | 226.08 | 226.08 |
| 340 | 226.08 | 226.08 | 226.08 | 226.08 | 226.08 |
| 345 | 226.08 | 226.08 | 226.07 | 226.07 | 226.07 |
| 350 | 226.07 | 226.07 | 226.07 | 226.07 | 226.07 |
| 355 | 226.07 | 226.06 | 226.06 | 226.06 | 226.06 |
| 360 | 226.06 | 226.06 | 226.06 | 226.06 | 226.06 |
| 365 | 226.06 | 226.05 | 226.05 | 226.05 | 226.05 |
| 370 | 226.05 | 226.05 | 226.05 | 226.05 | 226.05 |
| 375 | 226.04 | 226.04 | 226.04 | 226.04 | 226.04 |
| 380 | 226.04 | 226.04 | 226.04 | 226.04 | 226.04 |
| 385 | 226.03 | 226.03 | 226.03 | 226.03 | 226.03 |
| 390 | 226.03 | 226.03 | 226.03 | 226.03 | 226.02 |
| 395 | 226.02 | 226.02 | 226.02 | 226.02 | 226.02 |
| 400 | 226.02 | 226.02 | 226.02 | 226.02 | 226.01 |

# Basin 3D Drawdown

Subsection: Time vs. Elevation
Label: 1 (OUT)
Scenario: Drawdown

Return Event: 100 years
Storm Event:

**Time vs. Elevation (ft)**

**Output Time increment = 1 min**
**Time on left represents time for first value in each row.**

| Time (min) | Elevation (ft) | Elevation (ft) | Elevation (ft) | Elevation (ft) | Elevation (ft) |
|---|---|---|---|---|---|
| 405 | 226.01 | 226.01 | 226.01 | 226.01 | 226.01 |
| 410 | 226.01 | 226.01 | 226.01 | 226.01 | 226.00 |
| 415 | 226.00 | 226.00 | 226.00 | 226.00 | 226.00 |
| 420 | 226.00 | 226.00 | 226.00 | 225.99 | 225.99 |
| 425 | 225.99 | 225.99 | 225.99 | 225.99 | 225.99 |
| 430 | 225.99 | 225.99 | 225.99 | 225.98 | 225.98 |
| 435 | 225.98 | 225.98 | 225.98 | 225.98 | 225.98 |
| 440 | 225.98 | 225.98 | 225.98 | 225.97 | 225.97 |
| 445 | 225.97 | 225.97 | 225.97 | 225.97 | 225.97 |
| 450 | 225.97 | 225.97 | 225.97 | 225.96 | 225.96 |
| 455 | 225.96 | 225.96 | 225.96 | 225.96 | 225.96 |
| 460 | 225.96 | 225.96 | 225.96 | 225.95 | 225.95 |
| 465 | 225.95 | 225.95 | 225.95 | 225.95 | 225.95 |
| 470 | 225.95 | 225.95 | 225.95 | 225.94 | 225.94 |
| 475 | 225.94 | 225.94 | 225.94 | 225.94 | 225.94 |
| 480 | 225.94 | 225.94 | 225.94 | 225.93 | 225.93 |
| 485 | 225.93 | 225.93 | 225.93 | 225.93 | 225.93 |
| 490 | 225.93 | 225.93 | 225.93 | 225.92 | 225.92 |
| 495 | 225.92 | 225.92 | 225.92 | 225.92 | 225.92 |
| 500 | 225.92 | 225.92 | 225.92 | 225.91 | 225.91 |
| 505 | 225.91 | 225.91 | 225.91 | 225.91 | 225.91 |
| 510 | 225.91 | 225.91 | 225.91 | 225.91 | 225.90 |
| 515 | 225.90 | 225.90 | 225.90 | 225.90 | 225.90 |
| 520 | 225.90 | 225.90 | 225.90 | 225.90 | 225.89 |
| 525 | 225.89 | 225.89 | 225.89 | 225.89 | 225.89 |
| 530 | 225.89 | 225.89 | 225.89 | 225.89 | 225.88 |
| 535 | 225.88 | 225.88 | 225.88 | 225.88 | 225.88 |
| 540 | 225.88 | 225.88 | 225.88 | 225.88 | 225.88 |
| 545 | 225.87 | 225.87 | 225.87 | 225.87 | 225.87 |
| 550 | 225.87 | 225.87 | 225.87 | 225.87 | 225.87 |
| 555 | 225.86 | 225.86 | 225.86 | 225.86 | 225.86 |
| 560 | 225.86 | 225.86 | 225.86 | 225.86 | 225.86 |
| 565 | 225.86 | 225.85 | 225.85 | 225.85 | 225.85 |
| 570 | 225.85 | 225.85 | 225.85 | 225.85 | 225.85 |
| 575 | 225.85 | 225.85 | 225.84 | 225.84 | 225.84 |
| 580 | 225.84 | 225.84 | 225.84 | 225.84 | 225.84 |
| 585 | 225.84 | 225.84 | 225.84 | 225.83 | 225.83 |
| 590 | 225.83 | 225.83 | 225.83 | 225.83 | 225.83 |
| 595 | 225.83 | 225.83 | 225.83 | 225.83 | 225.82 |
| 600 | 225.82 | 225.82 | 225.82 | 225.82 | 225.82 |
| 605 | 225.82 | 225.82 | 225.82 | 225.82 | 225.82 |

# Basin 3D Drawdown

Subsection: Time vs. Elevation
Label: 1 (OUT)
Scenario: Drawdown

Return Event: 100 years
Storm Event:

**Time vs. Elevation (ft)**

**Output Time increment = 1 min**
**Time on left represents time for first value in each row.**

| Time (min) | Elevation (ft) | Elevation (ft) | Elevation (ft) | Elevation (ft) | Elevation (ft) |
|---|---|---|---|---|---|
| 610 | 225.81 | 225.81 | 225.81 | 225.81 | 225.81 |
| 615 | 225.81 | 225.81 | 225.81 | 225.81 | 225.81 |
| 620 | 225.81 | 225.80 | 225.80 | 225.80 | 225.80 |
| 625 | 225.80 | 225.80 | 225.80 | 225.80 | 225.80 |
| 630 | 225.80 | 225.80 | 225.79 | 225.79 | 225.79 |
| 635 | 225.79 | 225.79 | 225.79 | 225.79 | 225.79 |
| 640 | 225.79 | 225.79 | 225.79 | 225.79 | 225.78 |
| 645 | 225.78 | 225.78 | 225.78 | 225.78 | 225.78 |
| 650 | 225.78 | 225.78 | 225.78 | 225.78 | 225.78 |
| 655 | 225.77 | 225.77 | 225.77 | 225.77 | 225.77 |
| 660 | 225.77 | 225.77 | 225.77 | 225.77 | 225.77 |
| 665 | 225.77 | 225.77 | 225.76 | 225.76 | 225.76 |
| 670 | 225.76 | 225.76 | 225.76 | 225.76 | 225.76 |
| 675 | 225.76 | 225.76 | 225.76 | 225.76 | 225.75 |
| 680 | 225.75 | 225.75 | 225.75 | 225.75 | 225.75 |
| 685 | 225.75 | 225.75 | 225.75 | 225.75 | 225.75 |
| 690 | 225.74 | 225.74 | 225.74 | 225.74 | 225.74 |
| 695 | 225.74 | 225.74 | 225.74 | 225.74 | 225.74 |
| 700 | 225.74 | 225.74 | 225.73 | 225.73 | 225.73 |
| 705 | 225.73 | 225.73 | 225.73 | 225.73 | 225.73 |
| 710 | 225.73 | 225.73 | 225.73 | 225.73 | 225.73 |
| 715 | 225.72 | 225.72 | 225.72 | 225.72 | 225.72 |
| 720 | 225.72 | 225.72 | 225.72 | 225.72 | 225.72 |
| 725 | 225.72 | 225.72 | 225.71 | 225.71 | 225.71 |
| 730 | 225.71 | 225.71 | 225.71 | 225.71 | 225.71 |
| 735 | 225.71 | 225.71 | 225.71 | 225.71 | 225.70 |
| 740 | 225.70 | 225.70 | 225.70 | 225.70 | 225.70 |
| 745 | 225.70 | 225.70 | 225.70 | 225.70 | 225.70 |
| 750 | 225.70 | 225.70 | 225.69 | 225.69 | 225.69 |
| 755 | 225.69 | 225.69 | 225.69 | 225.69 | 225.69 |
| 760 | 225.69 | 225.69 | 225.69 | 225.69 | 225.68 |
| 765 | 225.68 | 225.68 | 225.68 | 225.68 | 225.68 |
| 770 | 225.68 | 225.68 | 225.68 | 225.68 | 225.68 |
| 775 | 225.68 | 225.68 | 225.67 | 225.67 | 225.67 |
| 780 | 225.67 | 225.67 | 225.67 | 225.67 | 225.67 |
| 785 | 225.67 | 225.67 | 225.67 | 225.67 | 225.67 |
| 790 | 225.66 | 225.66 | 225.66 | 225.66 | 225.66 |
| 795 | 225.66 | 225.66 | 225.66 | 225.66 | 225.66 |
| 800 | 225.66 | 225.66 | 225.66 | 225.65 | 225.65 |
| 805 | 225.65 | 225.65 | 225.65 | 225.65 | 225.65 |
| 810 | 225.65 | 225.65 | 225.65 | 225.65 | 225.65 |

# Basin 3D Drawdown

Subsection: Time vs. Elevation
Label: 1 (OUT)
Scenario: Drawdown

Return Event: 100 years
Storm Event:

**Time vs. Elevation (ft)**

**Output Time increment = 1 min**
**Time on left represents time for first value in each row.**

| Time (min) | Elevation (ft) | Elevation (ft) | Elevation (ft) | Elevation (ft) | Elevation (ft) |
|---|---|---|---|---|---|
| 815 | 225.65 | 225.65 | 225.64 | 225.64 | 225.64 |
| 820 | 225.64 | 225.64 | 225.64 | 225.64 | 225.64 |
| 825 | 225.64 | 225.64 | 225.64 | 225.64 | 225.64 |
| 830 | 225.63 | 225.63 | 225.63 | 225.63 | 225.63 |
| 835 | 225.63 | 225.63 | 225.63 | 225.63 | 225.63 |
| 840 | 225.63 | 225.63 | 225.63 | 225.63 | 225.62 |
| 845 | 225.62 | 225.62 | 225.62 | 225.62 | 225.62 |
| 850 | 225.62 | 225.62 | 225.62 | 225.62 | 225.62 |
| 855 | 225.62 | 225.62 | 225.62 | 225.61 | 225.61 |
| 860 | 225.61 | 225.61 | 225.61 | 225.61 | 225.61 |
| 865 | 225.61 | 225.61 | 225.61 | 225.61 | 225.61 |
| 870 | 225.61 | 225.61 | 225.61 | 225.60 | 225.60 |
| 875 | 225.60 | 225.60 | 225.60 | 225.60 | 225.60 |
| 880 | 225.60 | 225.60 | 225.60 | 225.60 | 225.60 |
| 885 | 225.60 | 225.60 | 225.59 | 225.59 | 225.59 |
| 890 | 225.59 | 225.59 | 225.59 | 225.59 | 225.59 |
| 895 | 225.59 | 225.59 | 225.59 | 225.59 | 225.59 |
| 900 | 225.59 | 225.59 | 225.58 | 225.58 | 225.58 |
| 905 | 225.58 | 225.58 | 225.58 | 225.58 | 225.58 |
| 910 | 225.58 | 225.58 | 225.58 | 225.58 | 225.58 |
| 915 | 225.58 | 225.58 | 225.57 | 225.57 | 225.57 |
| 920 | 225.57 | 225.57 | 225.57 | 225.57 | 225.57 |
| 925 | 225.57 | 225.57 | 225.57 | 225.57 | 225.57 |
| 930 | 225.57 | 225.57 | 225.57 | 225.56 | 225.56 |
| 935 | 225.56 | 225.56 | 225.56 | 225.56 | 225.56 |
| 940 | 225.56 | 225.56 | 225.56 | 225.56 | 225.56 |
| 945 | 225.56 | 225.56 | 225.56 | 225.56 | 225.55 |
| 950 | 225.55 | 225.55 | 225.55 | 225.55 | 225.55 |
| 955 | 225.55 | 225.55 | 225.55 | 225.55 | 225.55 |
| 960 | 225.55 | 225.55 | 225.55 | 225.55 | 225.55 |
| 965 | 225.55 | 225.54 | 225.54 | 225.54 | 225.54 |
| 970 | 225.54 | 225.54 | 225.54 | 225.54 | 225.54 |
| 975 | 225.54 | 225.54 | 225.54 | 225.54 | 225.54 |
| 980 | 225.54 | 225.54 | 225.54 | 225.53 | 225.53 |
| 985 | 225.53 | 225.53 | 225.53 | 225.53 | 225.53 |
| 990 | 225.53 | 225.53 | 225.53 | 225.53 | 225.53 |
| 995 | 225.53 | 225.53 | 225.53 | 225.53 | 225.53 |
| 1,000 | 225.53 | 225.52 | 225.52 | 225.52 | 225.52 |
| 1,005 | 225.52 | 225.52 | 225.52 | 225.52 | 225.52 |
| 1,010 | 225.52 | 225.52 | 225.52 | 225.52 | 225.52 |
| 1,015 | 225.52 | 225.52 | 225.52 | 225.52 | 225.51 |

# Basin 3D Drawdown

Subsection: Time vs. Elevation
Label: 1 (OUT)
Scenario: Drawdown

Return Event: 100 years
Storm Event:

**Time vs. Elevation (ft)**

**Output Time increment = 1 min**
**Time on left represents time for first value in each row.**

| Time (min) | Elevation (ft) | Elevation (ft) | Elevation (ft) | Elevation (ft) | Elevation (ft) |
|---|---|---|---|---|---|
| 1,020 | 225.51 | 225.51 | 225.51 | 225.51 | 225.51 |
| 1,025 | 225.51 | 225.51 | 225.51 | 225.51 | 225.51 |
| 1,030 | 225.51 | 225.51 | 225.51 | 225.51 | 225.51 |
| 1,035 | 225.51 | 225.51 | 225.51 | 225.50 | 225.50 |
| 1,040 | 225.50 | 225.50 | 225.50 | 225.50 | 225.50 |
| 1,045 | 225.50 | 225.50 | 225.50 | 225.50 | 225.50 |
| 1,050 | 225.50 | 225.50 | 225.50 | 225.50 | 225.50 |
| 1,055 | 225.50 | 225.50 | 225.50 | 225.49 | 225.49 |
| 1,060 | 225.49 | 225.49 | 225.49 | 225.49 | 225.49 |
| 1,065 | 225.49 | 225.49 | 225.49 | 225.49 | 225.49 |
| 1,070 | 225.49 | 225.49 | 225.49 | 225.49 | 225.49 |
| 1,075 | 225.49 | 225.49 | 225.49 | 225.48 | 225.48 |
| 1,080 | 225.48 | 225.48 | 225.48 | 225.48 | 225.48 |
| 1,085 | 225.48 | 225.48 | 225.48 | 225.48 | 225.48 |
| 1,090 | 225.48 | 225.48 | 225.48 | 225.48 | 225.48 |
| 1,095 | 225.48 | 225.48 | 225.48 | 225.48 | 225.48 |
| 1,100 | 225.47 | 225.47 | 225.47 | 225.47 | 225.47 |
| 1,105 | 225.47 | 225.47 | 225.47 | 225.47 | 225.47 |
| 1,110 | 225.47 | 225.47 | 225.47 | 225.47 | 225.47 |
| 1,115 | 225.47 | 225.47 | 225.47 | 225.47 | 225.47 |
| 1,120 | 225.47 | 225.47 | 225.46 | 225.46 | 225.46 |
| 1,125 | 225.46 | 225.46 | 225.46 | 225.46 | 225.46 |
| 1,130 | 225.46 | 225.46 | 225.46 | 225.46 | 225.46 |
| 1,135 | 225.46 | 225.46 | 225.46 | 225.46 | 225.46 |
| 1,140 | 225.46 | 225.46 | 225.46 | 225.46 | 225.46 |
| 1,145 | 225.45 | 225.45 | 225.45 | 225.45 | 225.45 |
| 1,150 | 225.45 | 225.45 | 225.45 | 225.45 | 225.45 |
| 1,155 | 225.45 | 225.45 | 225.45 | 225.45 | 225.45 |
| 1,160 | 225.45 | 225.45 | 225.45 | 225.45 | 225.45 |
| 1,165 | 225.45 | 225.45 | 225.45 | 225.45 | 225.44 |
| 1,170 | 225.44 | 225.44 | 225.44 | 225.44 | 225.44 |
| 1,175 | 225.44 | 225.44 | 225.44 | 225.44 | 225.44 |
| 1,180 | 225.44 | 225.44 | 225.44 | 225.44 | 225.44 |
| 1,185 | 225.44 | 225.44 | 225.44 | 225.44 | 225.44 |
| 1,190 | 225.44 | 225.44 | 225.44 | 225.44 | 225.44 |
| 1,195 | 225.43 | 225.43 | 225.43 | 225.43 | 225.43 |
| 1,200 | 225.43 | 225.43 | 225.43 | 225.43 | 225.43 |
| 1,205 | 225.43 | 225.43 | 225.43 | 225.43 | 225.43 |
| 1,210 | 225.43 | 225.43 | 225.43 | 225.43 | 225.43 |
| 1,215 | 225.43 | 225.43 | 225.43 | 225.43 | 225.43 |
| 1,220 | 225.43 | 225.43 | 225.42 | 225.42 | 225.42 |

# Basin 3D Drawdown

Subsection: Time vs. Elevation
Label: 1 (OUT)
Scenario: Drawdown

Return Event: 100 years
Storm Event:

**Time vs. Elevation (ft)**

**Output Time increment = 1 min**
**Time on left represents time for first value in each row.**

| Time (min) | Elevation (ft) | Elevation (ft) | Elevation (ft) | Elevation (ft) | Elevation (ft) |
|---|---|---|---|---|---|
| 1,225 | 225.42 | 225.42 | 225.42 | 225.42 | 225.42 |
| 1,230 | 225.42 | 225.42 | 225.42 | 225.42 | 225.42 |
| 1,235 | 225.42 | 225.42 | 225.42 | 225.42 | 225.42 |
| 1,240 | 225.42 | 225.42 | 225.42 | 225.42 | 225.42 |
| 1,245 | 225.42 | 225.42 | 225.42 | 225.42 | 225.42 |
| 1,250 | 225.41 | 225.41 | 225.41 | 225.41 | 225.41 |
| 1,255 | 225.41 | 225.41 | 225.41 | 225.41 | 225.41 |
| 1,260 | 225.41 | 225.41 | 225.41 | 225.41 | 225.41 |
| 1,265 | 225.41 | 225.41 | 225.41 | 225.41 | 225.41 |
| 1,270 | 225.41 | 225.41 | 225.41 | 225.41 | 225.41 |
| 1,275 | 225.41 | 225.41 | 225.41 | 225.41 | 225.41 |
| 1,280 | 225.41 | 225.40 | 225.40 | 225.40 | 225.40 |
| 1,285 | 225.40 | 225.40 | 225.40 | 225.40 | 225.40 |
| 1,290 | 225.40 | 225.40 | 225.40 | 225.40 | 225.40 |
| 1,295 | 225.40 | 225.40 | 225.40 | 225.40 | 225.40 |
| 1,300 | 225.40 | 225.40 | 225.40 | 225.40 | 225.40 |
| 1,305 | 225.40 | 225.40 | 225.40 | 225.40 | 225.40 |
| 1,310 | 225.40 | 225.40 | 225.40 | 225.39 | 225.39 |
| 1,315 | 225.39 | 225.39 | 225.39 | 225.39 | 225.39 |
| 1,320 | 225.39 | 225.39 | 225.39 | 225.39 | 225.39 |
| 1,325 | 225.39 | 225.39 | 225.39 | 225.39 | 225.39 |
| 1,330 | 225.39 | 225.39 | 225.39 | 225.39 | 225.39 |
| 1,335 | 225.39 | 225.39 | 225.39 | 225.39 | 225.39 |
| 1,340 | 225.39 | 225.39 | 225.39 | 225.39 | 225.39 |
| 1,345 | 225.39 | 225.38 | 225.38 | 225.38 | 225.38 |
| 1,350 | 225.38 | 225.38 | 225.38 | 225.38 | 225.38 |
| 1,355 | 225.38 | 225.38 | 225.38 | 225.38 | 225.38 |
| 1,360 | 225.38 | 225.38 | 225.38 | 225.38 | 225.38 |
| 1,365 | 225.38 | 225.38 | 225.38 | 225.38 | 225.38 |
| 1,370 | 225.38 | 225.38 | 225.38 | 225.38 | 225.38 |
| 1,375 | 225.38 | 225.38 | 225.38 | 225.38 | 225.38 |
| 1,380 | 225.37 | 225.37 | 225.37 | 225.37 | 225.37 |
| 1,385 | 225.37 | 225.37 | 225.37 | 225.37 | 225.37 |
| 1,390 | 225.37 | 225.37 | 225.37 | 225.37 | 225.37 |
| 1,395 | 225.37 | 225.37 | 225.37 | 225.37 | 225.37 |
| 1,400 | 225.37 | 225.37 | 225.37 | 225.37 | 225.37 |
| 1,405 | 225.37 | 225.37 | 225.37 | 225.37 | 225.37 |
| 1,410 | 225.37 | 225.37 | 225.37 | 225.37 | 225.37 |
| 1,415 | 225.37 | 225.36 | 225.36 | 225.36 | 225.36 |
| 1,420 | 225.36 | 225.36 | 225.36 | 225.36 | 225.36 |
| 1,425 | 225.36 | 225.36 | 225.36 | 225.36 | 225.36 |

# Basin 3D Drawdown

Subsection: Time vs. Elevation
Label: 1 (OUT)
Scenario: Drawdown

Return Event: 100 years
Storm Event:

**Time vs. Elevation (ft)**

**Output Time increment = 1 min**
**Time on left represents time for first value in each row.**

| Time (min) | Elevation (ft) | Elevation (ft) | Elevation (ft) | Elevation (ft) | Elevation (ft) |
|---|---|---|---|---|---|
| 1,430 | 225.36 | 225.36 | 225.36 | 225.36 | 225.36 |
| 1,435 | 225.36 | 225.36 | 225.36 | 225.36 | 225.36 |
| 1,440 | 225.36 | 225.36 | 225.36 | 225.36 | 225.36 |
| 1,445 | 225.36 | 225.36 | 225.36 | 225.36 | 225.36 |
| 1,450 | 225.36 | 225.36 | 225.36 | 225.36 | 225.35 |
| 1,455 | 225.35 | 225.35 | 225.35 | 225.35 | 225.35 |
| 1,460 | 225.35 | 225.35 | 225.35 | 225.35 | 225.35 |
| 1,465 | 225.35 | 225.35 | 225.35 | 225.35 | 225.35 |
| 1,470 | 225.35 | 225.35 | 225.35 | 225.35 | 225.35 |
| 1,475 | 225.35 | 225.35 | 225.35 | 225.35 | 225.35 |
| 1,480 | 225.35 | 225.35 | 225.35 | 225.35 | 225.35 |
| 1,485 | 225.35 | 225.35 | 225.35 | 225.35 | 225.35 |
| 1,490 | 225.35 | 225.35 | 225.35 | 225.34 | 225.34 |
| 1,495 | 225.34 | 225.34 | 225.34 | 225.34 | 225.34 |
| 1,500 | 225.34 | 225.34 | 225.34 | 225.34 | 225.34 |
| 1,505 | 225.34 | 225.34 | 225.34 | 225.34 | 225.34 |
| 1,510 | 225.34 | 225.34 | 225.34 | 225.34 | 225.34 |
| 1,515 | 225.34 | 225.34 | 225.34 | 225.34 | 225.34 |
| 1,520 | 225.34 | 225.34 | 225.34 | 225.34 | 225.34 |
| 1,525 | 225.34 | 225.34 | 225.34 | 225.34 | 225.34 |
| 1,530 | 225.34 | 225.34 | 225.34 | 225.34 | 225.33 |
| 1,535 | 225.33 | 225.33 | 225.33 | 225.33 | 225.33 |
| 1,540 | 225.33 | 225.33 | 225.33 | 225.33 | 225.33 |
| 1,545 | 225.33 | 225.33 | 225.33 | 225.33 | 225.33 |
| 1,550 | 225.33 | 225.33 | 225.33 | 225.33 | 225.33 |
| 1,555 | 225.33 | 225.33 | 225.33 | 225.33 | 225.33 |
| 1,560 | 225.33 | 225.33 | 225.33 | 225.33 | 225.33 |
| 1,565 | 225.33 | 225.33 | 225.33 | 225.33 | 225.33 |
| 1,570 | 225.33 | 225.33 | 225.33 | 225.33 | 225.33 |
| 1,575 | 225.33 | 225.33 | 225.33 | 225.32 | 225.32 |
| 1,580 | 225.32 | 225.32 | 225.32 | 225.32 | 225.32 |
| 1,585 | 225.32 | 225.32 | 225.32 | 225.32 | 225.32 |
| 1,590 | 225.32 | 225.32 | 225.32 | 225.32 | 225.32 |
| 1,595 | 225.32 | 225.32 | 225.32 | 225.32 | 225.32 |
| 1,600 | 225.32 | 225.32 | 225.32 | 225.32 | 225.32 |
| 1,605 | 225.32 | 225.32 | 225.32 | 225.32 | 225.32 |
| 1,610 | 225.32 | 225.32 | 225.32 | 225.32 | 225.32 |
| 1,615 | 225.32 | 225.32 | 225.32 | 225.32 | 225.32 |
| 1,620 | 225.32 | 225.32 | 225.32 | 225.32 | 225.31 |
| 1,625 | 225.31 | 225.31 | 225.31 | 225.31 | 225.31 |
| 1,630 | 225.31 | 225.31 | 225.31 | 225.31 | 225.31 |

# Basin 3D Drawdown

Subsection: Time vs. Elevation
Label: 1 (OUT)
Scenario: Drawdown

Return Event: 100 years
Storm Event:

**Time vs. Elevation (ft)**

**Output Time increment = 1 min**
**Time on left represents time for first value in each row.**

| Time (min) | Elevation (ft) | Elevation (ft) | Elevation (ft) | Elevation (ft) | Elevation (ft) |
|---|---|---|---|---|---|
| 1,635 | 225.31 | 225.31 | 225.31 | 225.31 | 225.31 |
| 1,640 | 225.31 | 225.31 | 225.31 | 225.31 | 225.31 |
| 1,645 | 225.31 | 225.31 | 225.31 | 225.31 | 225.31 |
| 1,650 | 225.31 | 225.31 | 225.31 | 225.31 | 225.31 |
| 1,655 | 225.31 | 225.31 | 225.31 | 225.31 | 225.31 |
| 1,660 | 225.31 | 225.31 | 225.31 | 225.31 | 225.31 |
| 1,665 | 225.31 | 225.31 | 225.31 | 225.31 | 225.31 |
| 1,670 | 225.31 | 225.31 | 225.30 | 225.30 | 225.30 |
| 1,675 | 225.30 | 225.30 | 225.30 | 225.30 | 225.30 |
| 1,680 | 225.30 | 225.30 | 225.30 | 225.30 | 225.30 |
| 1,685 | 225.30 | 225.30 | 225.30 | 225.30 | 225.30 |
| 1,690 | 225.30 | 225.30 | 225.30 | 225.30 | 225.30 |
| 1,695 | 225.30 | 225.30 | 225.30 | 225.30 | 225.30 |
| 1,700 | 225.30 | 225.30 | 225.30 | 225.30 | 225.30 |
| 1,705 | 225.30 | 225.30 | 225.30 | 225.30 | 225.30 |
| 1,710 | 225.30 | 225.30 | 225.30 | 225.30 | 225.30 |
| 1,715 | 225.30 | 225.30 | 225.30 | 225.30 | 225.30 |
| 1,720 | 225.30 | 225.30 | 225.30 | 225.29 | 225.29 |
| 1,725 | 225.29 | 225.29 | 225.29 | 225.29 | 225.29 |
| 1,730 | 225.29 | 225.29 | 225.29 | 225.29 | 225.29 |
| 1,735 | 225.29 | 225.29 | 225.29 | 225.29 | 225.29 |
| 1,740 | 225.29 | 225.29 | 225.29 | 225.29 | 225.29 |
| 1,745 | 225.29 | 225.29 | 225.29 | 225.29 | 225.29 |
| 1,750 | 225.29 | 225.29 | 225.29 | 225.29 | 225.29 |
| 1,755 | 225.29 | 225.29 | 225.29 | 225.29 | 225.29 |
| 1,760 | 225.29 | 225.29 | 225.29 | 225.29 | 225.29 |
| 1,765 | 225.29 | 225.29 | 225.29 | 225.29 | 225.29 |
| 1,770 | 225.29 | 225.29 | 225.29 | 225.29 | 225.29 |
| 1,775 | 225.29 | 225.28 | 225.28 | 225.28 | 225.28 |
| 1,780 | 225.28 | 225.28 | 225.28 | 225.28 | 225.28 |
| 1,785 | 225.28 | 225.28 | 225.28 | 225.28 | 225.28 |
| 1,790 | 225.28 | 225.28 | 225.28 | 225.28 | 225.28 |
| 1,795 | 225.28 | 225.28 | 225.28 | 225.28 | 225.28 |
| 1,800 | 225.28 | 225.28 | 225.28 | 225.28 | 225.28 |
| 1,805 | 225.28 | 225.28 | 225.28 | 225.28 | 225.28 |
| 1,810 | 225.28 | 225.28 | 225.28 | 225.28 | 225.28 |
| 1,815 | 225.28 | 225.28 | 225.28 | 225.28 | 225.28 |
| 1,820 | 225.28 | 225.28 | 225.28 | 225.28 | 225.28 |
| 1,825 | 225.28 | 225.28 | 225.28 | 225.28 | 225.27 |
| 1,830 | 225.27 | 225.27 | 225.27 | 225.27 | 225.27 |
| 1,835 | 225.27 | 225.27 | 225.27 | 225.27 | 225.27 |

# Basin 3D Drawdown

Subsection: Time vs. Elevation
Label: 1 (OUT)
Scenario: Drawdown

Return Event: 100 years
Storm Event:

**Time vs. Elevation (ft)**

**Output Time increment = 1 min**
**Time on left represents time for first value in each row.**

| Time (min) | Elevation (ft) | Elevation (ft) | Elevation (ft) | Elevation (ft) | Elevation (ft) |
|---|---|---|---|---|---|
| 1,840 | 225.27 | 225.27 | 225.27 | 225.27 | 225.27 |
| 1,845 | 225.27 | 225.27 | 225.27 | 225.27 | 225.27 |
| 1,850 | 225.27 | 225.27 | 225.27 | 225.27 | 225.27 |
| 1,855 | 225.27 | 225.27 | 225.27 | 225.27 | 225.27 |
| 1,860 | 225.27 | 225.27 | 225.27 | 225.27 | 225.27 |
| 1,865 | 225.27 | 225.27 | 225.27 | 225.27 | 225.27 |
| 1,870 | 225.27 | 225.27 | 225.27 | 225.27 | 225.27 |
| 1,875 | 225.27 | 225.27 | 225.27 | 225.27 | 225.27 |
| 1,880 | 225.27 | 225.27 | 225.27 | 225.26 | 225.26 |
| 1,885 | 225.26 | 225.26 | 225.26 | 225.26 | 225.26 |
| 1,890 | 225.26 | 225.26 | 225.26 | 225.26 | 225.26 |
| 1,895 | 225.26 | 225.26 | 225.26 | 225.26 | 225.26 |
| 1,900 | 225.26 | 225.26 | 225.26 | 225.26 | 225.26 |
| 1,905 | 225.26 | 225.26 | 225.26 | 225.26 | 225.26 |
| 1,910 | 225.26 | 225.26 | 225.26 | 225.26 | 225.26 |
| 1,915 | 225.26 | 225.26 | 225.26 | 225.26 | 225.26 |
| 1,920 | 225.26 | 225.26 | 225.26 | 225.26 | 225.26 |
| 1,925 | 225.26 | 225.26 | 225.26 | 225.26 | 225.26 |
| 1,930 | 225.26 | 225.26 | 225.26 | 225.26 | 225.26 |
| 1,935 | 225.26 | 225.26 | 225.26 | 225.25 | 225.25 |
| 1,940 | 225.25 | 225.25 | 225.25 | 225.25 | 225.25 |
| 1,945 | 225.25 | 225.25 | 225.25 | 225.25 | 225.25 |
| 1,950 | 225.25 | 225.25 | 225.25 | 225.25 | 225.25 |
| 1,955 | 225.25 | 225.25 | 225.25 | 225.25 | 225.25 |
| 1,960 | 225.25 | 225.25 | 225.25 | 225.25 | 225.25 |
| 1,965 | 225.25 | 225.25 | 225.25 | 225.25 | 225.25 |
| 1,970 | 225.25 | 225.25 | 225.25 | 225.25 | 225.25 |
| 1,975 | 225.25 | 225.25 | 225.25 | 225.25 | 225.25 |
| 1,980 | 225.25 | 225.25 | 225.25 | 225.25 | 225.25 |
| 1,985 | 225.25 | 225.25 | 225.25 | 225.25 | 225.25 |
| 1,990 | 225.25 | 225.25 | 225.25 | 225.25 | 225.25 |
| 1,995 | 225.24 | 225.24 | 225.24 | 225.24 | 225.24 |
| 2,000 | 225.24 | (N/A) | (N/A) | (N/A) | (N/A) |

# Basin 3D Drawdown

Subsection: Outlet Input Data
Label: Outlet#1 w Underdrain
Scenario: Drawdown

Return Event: 100 years
Storm Event:

| Requested Pond Water Surface Elevations | |
|---|---|
| Minimum (Headwater) | 221.50 ft |
| Increment (Headwater) | 0.10 ft |
| Maximum (Headwater) | 229.50 ft |

## Outlet Connectivity

| Structure Type | Outlet ID | Direction | Outfall | E1 (ft) | E2 (ft) |
|---|---|---|---|---|---|
| Orifice-Area | Orifice - 2A | Forward | TW | 226.50 | 229.50 |
| Inlet Box | Riser - 1 | Forward | TW | 227.65 | 229.50 |
| Orifice-Circular | Orifice - Underdrain | Forward | TW | 221.75 | 229.50 |
| Inlet Box | Emergency Riser - 1 | Forward | TW | 227.90 | 229.50 |
| Orifice-Circular | Orifice - 1 | Forward | TW | 225.25 | 229.50 |
| Tailwater Settings | Tailwater | | | (N/A) | (N/A) |

# Basin 3D Drawdown

Subsection: Outlet Input Data
Label: Outlet#1 w Underdrain
Scenario: Drawdown

Return Event: 100 years
Storm Event:

| Structure ID: Riser - 1<br>Structure Type: Inlet Box | |
|---|---|
| Number of Openings | 1 |
| Elevation | 227.70 ft |
| Orifice Area | 16.0 ft² |
| Orifice Coefficient | 0.600 |
| Weir Length | 16.00 ft |
| Weir Coefficient | 3.00 (ft^0.5)/s |
| K Reverse | 1.000 |
| Manning's n | 0.000 |
| Kev, Charged Riser | 0.000 |
| Weir Submergence | False |
| Orifice H to crest | True |

| Structure ID: Orifice - 1<br>Structure Type: Orifice-Circular | |
|---|---|
| Number of Openings | 1 |
| Elevation | 225.25 ft |
| Orifice Diameter | 3.5 in |
| Orifice Coefficient | 0.600 |

| Structure ID: Orifice - 2A<br>Structure Type: Orifice-Area | |
|---|---|
| Number of Openings | 5 |
| Elevation | 226.40 ft |
| Orifice Area | 0.7 ft² |
| Top Elevation | 226.73 ft |
| Datum Elevation | 226.40 ft |
| Orifice Coefficient | 0.600 |

| Structure ID: Emergency Riser - 1<br>Structure Type: Inlet Box | |
|---|---|
| Number of Openings | 1 |
| Elevation | 227.90 ft |
| Orifice Area | 16.0 ft² |
| Orifice Coefficient | 0.600 |
| Weir Length | 16.00 ft |
| Weir Coefficient | 3.00 (ft^0.5)/s |
| K Reverse | 1.000 |
| Manning's n | 0.000 |
| Kev, Charged Riser | 0.000 |
| Weir Submergence | False |

# Basin 3D Drawdown

Subsection: Outlet Input Data
Label: Outlet#1 w Underdrain
Scenario: Drawdown

Return Event: 100 years
Storm Event:

| Structure ID: Emergency Riser - 1<br>Structure Type: Inlet Box | |
|---|---|
| Orifice H to crest | True |

| Structure ID: Orifice - Underdrain<br>Structure Type: Orifice-Circular | |
|---|---|
| Number of Openings | 1 |
| Elevation | 221.75 ft |
| Orifice Diameter | 1.0 in |
| Orifice Coefficient | 0.600 |

| Structure ID: TW<br>Structure Type: TW Setup, DS Channel | |
|---|---|
| Tailwater Type | Free Outfall |

| Convergence Tolerances | |
|---|---|
| Maximum Iterations | 80 |
| Tailwater Tolerance (Minimum) | 0.01 ft |
| Tailwater Tolerance (Maximum) | 0.10 ft |
| Headwater Tolerance (Minimum) | 0.01 ft |
| Headwater Tolerance (Maximum) | 0.10 ft |
| Flow Tolerance (Minimum) | 0.001 ft³/s |
| Flow Tolerance (Maximum) | 10.000 ft³/s |

# Basin 3D Drawdown

Subsection: Elevation-Volume-Flow Table (Pond)
Label: 1
Scenario: Drawdown

Return Event: 100 years
Storm Event:

| Infiltration | |
|---|---|
| Infiltration Method (Computed) | No Infiltration |

| Initial Conditions | |
|---|---|
| Elevation (Water Surface, Initial) | 229.50 ft |
| Volume (Initial) | 3.283 ac-ft |
| Flow (Initial Outlet) | 230.85 ft³/s |
| Flow (Initial Infiltration) | 0.00 ft³/s |
| Flow (Initial, Total) | 230.85 ft³/s |
| Time Increment | 1 min |

| Elevation (ft) | Outflow (ft³/s) | Storage (ac-ft) | Area (ft²) | Infiltration (ft³/s) | Flow (Total) (ft³/s) | 2S/t + O (ft³/s) |
|---|---|---|---|---|---|---|
| 221.50 | 0.00 | 0.000 | 15,326.000 | 0.00 | 0.00 | 0.00 |
| 221.60 | 0.00 | 0.035 | 15,326.000 | 0.00 | 0.00 | 51.09 |
| 221.70 | 0.00 | 0.070 | 15,326.000 | 0.00 | 0.00 | 102.17 |
| 221.75 | 0.00 | 0.088 | 15,326.000 | 0.00 | 0.00 | 127.72 |
| 221.80 | 0.00 | 0.106 | 15,326.000 | 0.00 | 0.00 | 153.26 |
| 221.90 | 0.01 | 0.141 | 15,326.000 | 0.00 | 0.01 | 204.36 |
| 222.00 | 0.01 | 0.176 | 15,326.000 | 0.00 | 0.01 | 255.45 |
| 222.10 | 0.01 | 0.211 | 15,326.000 | 0.00 | 0.01 | 306.53 |
| 222.20 | 0.02 | 0.246 | 15,326.000 | 0.00 | 0.02 | 357.62 |
| 222.30 | 0.02 | 0.281 | 15,326.000 | 0.00 | 0.02 | 408.71 |
| 222.40 | 0.02 | 0.317 | 15,326.000 | 0.00 | 0.02 | 459.80 |
| 222.50 | 0.02 | 0.352 | 15,326.000 | 0.00 | 0.02 | 510.89 |
| 222.60 | 0.02 | 0.387 | 15,326.000 | 0.00 | 0.02 | 561.98 |
| 222.70 | 0.03 | 0.422 | 15,326.000 | 0.00 | 0.03 | 613.07 |
| 222.80 | 0.03 | 0.457 | 15,326.000 | 0.00 | 0.03 | 664.15 |
| 222.90 | 0.03 | 0.493 | 15,326.000 | 0.00 | 0.03 | 715.24 |
| 223.00 | 0.03 | 0.528 | 15,326.000 | 0.00 | 0.03 | 766.33 |
| 223.10 | 0.03 | 0.563 | 15,326.000 | 0.00 | 0.03 | 817.42 |
| 223.20 | 0.03 | 0.598 | 15,326.000 | 0.00 | 0.03 | 868.50 |
| 223.30 | 0.03 | 0.633 | 15,326.000 | 0.00 | 0.03 | 919.59 |
| 223.40 | 0.03 | 0.668 | 15,326.000 | 0.00 | 0.03 | 970.68 |
| 223.50 | 0.03 | 0.704 | 15,326.000 | 0.00 | 0.03 | 1,021.77 |
| 223.60 | 0.04 | 0.739 | 15,326.000 | 0.00 | 0.04 | 1,072.86 |
| 223.70 | 0.04 | 0.774 | 15,326.000 | 0.00 | 0.04 | 1,123.94 |
| 223.80 | 0.04 | 0.809 | 15,326.000 | 0.00 | 0.04 | 1,175.03 |
| 223.90 | 0.04 | 0.844 | 15,326.000 | 0.00 | 0.04 | 1,226.12 |
| 224.00 | 0.04 | 0.880 | 15,326.000 | 0.00 | 0.04 | 1,277.21 |
| 224.10 | 0.04 | 0.915 | 15,326.000 | 0.00 | 0.04 | 1,328.29 |
| 224.20 | 0.04 | 0.950 | 15,326.000 | 0.00 | 0.04 | 1,379.38 |

# Basin 3D Drawdown

Subsection: Elevation-Volume-Flow Table (Pond) Return Event: 100 years
Label: 1 Storm Event:
Scenario: Drawdown

| Elevation (ft) | Outflow (ft³/s) | Storage (ac-ft) | Area (ft²) | Infiltration (ft³/s) | Flow (Total) (ft³/s) | 2S/t + O (ft³/s) |
|---|---|---|---|---|---|---|
| 224.30 | 0.04 | 0.985 | 15,326.000 | 0.00 | 0.04 | 1,430.47 |
| 224.40 | 0.04 | 1.020 | 15,326.000 | 0.00 | 0.04 | 1,481.56 |
| 224.50 | 0.04 | 1.056 | 15,326.000 | 0.00 | 0.04 | 1,532.64 |
| 224.60 | 0.04 | 1.091 | 15,478.686 | 0.00 | 0.04 | 1,583.98 |
| 224.70 | 0.04 | 1.127 | 15,632.130 | 0.00 | 0.04 | 1,635.84 |
| 224.80 | 0.05 | 1.163 | 15,786.330 | 0.00 | 0.05 | 1,688.20 |
| 224.90 | 0.05 | 1.199 | 15,941.286 | 0.00 | 0.05 | 1,741.08 |
| 225.00 | 0.05 | 1.236 | 16,097.000 | 0.00 | 0.05 | 1,794.48 |
| 225.10 | 0.05 | 1.273 | 16,253.302 | 0.00 | 0.05 | 1,848.40 |
| 225.20 | 0.05 | 1.310 | 16,410.359 | 0.00 | 0.05 | 1,902.84 |
| 225.25 | 0.05 | 1.329 | 16,489.170 | 0.00 | 0.05 | 1,930.25 |
| 225.30 | 0.05 | 1.348 | 16,568.171 | 0.00 | 0.05 | 1,957.81 |
| 225.40 | 0.09 | 1.387 | 16,726.738 | 0.00 | 0.09 | 2,013.33 |
| 225.50 | 0.14 | 1.425 | 16,886.060 | 0.00 | 0.14 | 2,069.41 |
| 225.60 | 0.20 | 1.464 | 17,046.138 | 0.00 | 0.20 | 2,126.01 |
| 225.70 | 0.23 | 1.503 | 17,206.971 | 0.00 | 0.23 | 2,183.14 |
| 225.80 | 0.26 | 1.543 | 17,368.559 | 0.00 | 0.26 | 2,240.79 |
| 225.90 | 0.28 | 1.583 | 17,530.902 | 0.00 | 0.28 | 2,298.98 |
| 226.00 | 0.30 | 1.624 | 17,694.000 | 0.00 | 0.30 | 2,357.71 |
| 226.10 | 0.32 | 1.664 | 17,856.075 | 0.00 | 0.32 | 2,416.98 |
| 226.20 | 0.34 | 1.706 | 18,018.889 | 0.00 | 0.34 | 2,476.79 |
| 226.30 | 0.36 | 1.747 | 18,182.441 | 0.00 | 0.36 | 2,537.14 |
| 226.40 | 0.38 | 1.789 | 18,346.733 | 0.00 | 0.38 | 2,598.04 |
| 226.50 | 3.33 | 1.831 | 18,511.764 | 0.00 | 3.33 | 2,662.42 |
| 226.60 | 6.28 | 1.874 | 18,677.533 | 0.00 | 6.28 | 2,727.35 |
| 226.70 | 9.22 | 1.917 | 18,844.041 | 0.00 | 9.22 | 2,792.84 |
| 226.80 | 11.09 | 1.961 | 19,011.289 | 0.00 | 11.09 | 2,857.80 |
| 226.90 | 12.37 | 2.004 | 19,179.275 | 0.00 | 12.37 | 2,922.72 |
| 227.00 | 13.52 | 2.049 | 19,348.000 | 0.00 | 13.52 | 2,988.08 |
| 227.10 | 14.57 | 2.093 | 19,515.838 | 0.00 | 14.57 | 3,053.91 |
| 227.20 | 15.56 | 2.138 | 19,684.401 | 0.00 | 15.56 | 3,120.23 |
| 227.30 | 16.49 | 2.184 | 19,853.689 | 0.00 | 16.49 | 3,187.06 |
| 227.40 | 17.36 | 2.229 | 20,023.702 | 0.00 | 17.36 | 3,254.40 |
| 227.50 | 18.20 | 2.276 | 20,194.440 | 0.00 | 18.20 | 3,322.26 |
| 227.60 | 18.99 | 2.322 | 20,365.902 | 0.00 | 18.99 | 3,390.66 |
| 227.70 | 19.76 | 2.369 | 20,538.089 | 0.00 | 19.76 | 3,459.59 |
| 227.80 | 22.01 | 2.416 | 20,711.001 | 0.00 | 22.01 | 3,530.60 |
| 227.90 | 25.50 | 2.464 | 20,884.638 | 0.00 | 25.50 | 3,603.41 |
| 228.00 | 31.30 | 2.512 | 21,059.000 | 0.00 | 31.30 | 3,679.11 |
| 228.10 | 39.00 | 2.561 | 21,232.497 | 0.00 | 39.00 | 3,757.30 |
| 228.20 | 48.06 | 2.610 | 21,406.706 | 0.00 | 48.06 | 3,837.43 |
| 228.30 | 58.29 | 2.659 | 21,581.627 | 0.00 | 58.29 | 3,919.30 |
| 228.40 | 69.53 | 2.709 | 21,757.259 | 0.00 | 69.53 | 4,002.78 |

# Basin 3D Drawdown

Subsection: Elevation-Volume-Flow Table (Pond) Return Event: 100 years
Label: 1 Storm Event:
Scenario: Drawdown

| Elevation (ft) | Outflow (ft³/s) | Storage (ac-ft) | Area (ft²) | Infiltration (ft³/s) | Flow (Total) (ft³/s) | 2S/t + O (ft³/s) |
|---|---|---|---|---|---|---|
| 228.50 | 81.70 | 2.759 | 21,933.603 | 0.00 | 81.70 | 4,087.76 |
| 228.60 | 94.73 | 2.810 | 22,110.659 | 0.00 | 94.73 | 4,174.19 |
| 228.70 | 108.55 | 2.861 | 22,288.427 | 0.00 | 108.55 | 4,262.02 |
| 228.80 | 123.12 | 2.912 | 22,466.906 | 0.00 | 123.12 | 4,351.18 |
| 228.90 | 138.40 | 2.964 | 22,646.097 | 0.00 | 138.40 | 4,441.65 |
| 229.00 | 154.37 | 3.016 | 22,826.000 | 0.00 | 154.37 | 4,533.40 |
| 229.10 | 170.98 | 3.068 | 23,005.593 | 0.00 | 170.98 | 4,626.40 |
| 229.20 | 188.22 | 3.121 | 23,185.889 | 0.00 | 188.22 | 4,720.62 |
| 229.30 | 206.05 | 3.175 | 23,366.889 | 0.00 | 206.05 | 4,816.05 |
| 229.40 | 218.48 | 3.229 | 23,548.593 | 0.00 | 218.48 | 4,906.67 |
| 229.50 | 230.85 | 3.283 | 23,731.000 | 0.00 | 230.85 | 4,997.83 |

# Basin 3D Drawdown

## Index

1

1 (Elevation-Volume-Flow Table (Pond))...

1 (Elevation-Volume-Flow Table (Pond), 100 years (Drawdown))...14, 15, 16

1 (OUT) (Time vs. Elevation)...

1 (OUT) (Time vs. Elevation, 100 years (Drawdown))...1, 2, 3, 4, 5, 6, 7, 8, 9, 10

O

Outlet#1 w Underdrain (Outlet Input Data)...

Outlet#1 w Underdrain (Outlet Input Data, 100 years (Drawdown))...11, 12, 13

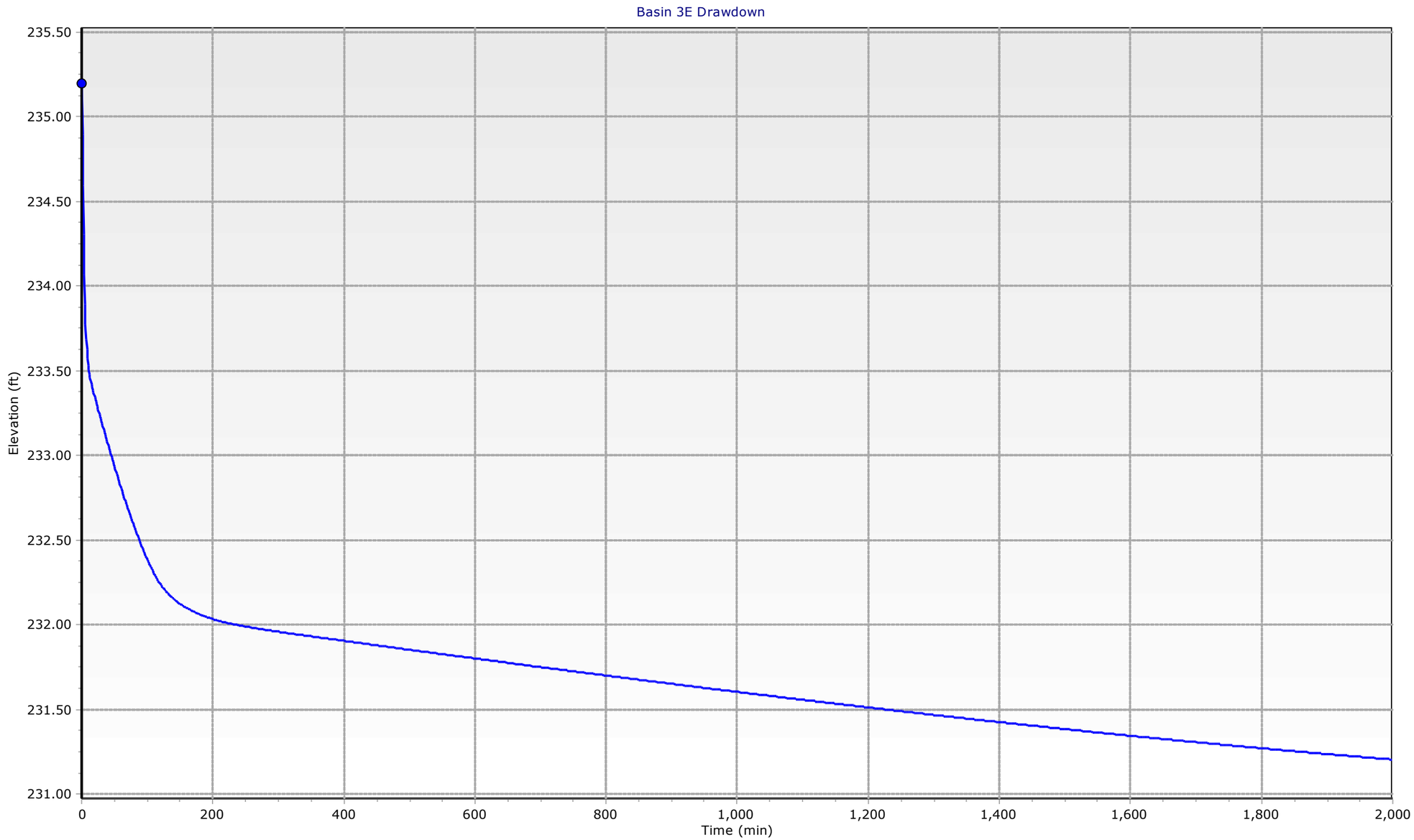
Basin 3E Drawdown
235.50
235.00
234.50
234.00
233.50
233.00
232.50
232.00
231.50
231.00
Elevation (ft)
0
200
400
600
800
1,000
1,200
1,400
1,600
1,800
2,000
Time (min)
1 - Drawdown - Elevation

# Table of Contents


| | | |
|---|---|---|
| 1 (OUT) | Time vs. Elevation | 1 |
| Outlet#1 | Outlet Input Data | 11 |
| 1 | Elevation-Volume-Flow Table (Pond) | 14 |

# Basin 3E Drawdown

Subsection: Time vs. Elevation
Label: 1 (OUT)
Scenario: Drawdown

Return Event: 100 years
Storm Event:

**Time vs. Elevation (ft)**

**Output Time increment = 1 min**
**Time on left represents time for first value in each row.**

| Time (min) | Elevation (ft) | Elevation (ft) | Elevation (ft) | Elevation (ft) | Elevation (ft) |
|---|---|---|---|---|---|
| 0 | 235.20 | 234.89 | 234.59 | 234.31 | 234.07 |
| 5 | 233.90 | 233.78 | 233.69 | 233.62 | 233.57 |
| 10 | 233.54 | 233.50 | 233.48 | 233.45 | 233.43 |
| 15 | 233.42 | 233.40 | 233.39 | 233.37 | 233.36 |
| 20 | 233.34 | 233.33 | 233.32 | 233.30 | 233.29 |
| 25 | 233.27 | 233.26 | 233.25 | 233.23 | 233.22 |
| 30 | 233.20 | 233.19 | 233.18 | 233.16 | 233.15 |
| 35 | 233.13 | 233.12 | 233.11 | 233.09 | 233.08 |
| 40 | 233.07 | 233.05 | 233.04 | 233.03 | 233.01 |
| 45 | 233.00 | 232.99 | 232.97 | 232.96 | 232.95 |
| 50 | 232.94 | 232.92 | 232.91 | 232.90 | 232.88 |
| 55 | 232.87 | 232.86 | 232.85 | 232.83 | 232.82 |
| 60 | 232.81 | 232.80 | 232.79 | 232.77 | 232.76 |
| 65 | 232.75 | 232.74 | 232.73 | 232.71 | 232.70 |
| 70 | 232.69 | 232.68 | 232.67 | 232.66 | 232.65 |
| 75 | 232.63 | 232.62 | 232.61 | 232.60 | 232.59 |
| 80 | 232.58 | 232.57 | 232.56 | 232.55 | 232.54 |
| 85 | 232.53 | 232.52 | 232.51 | 232.50 | 232.49 |
| 90 | 232.48 | 232.47 | 232.46 | 232.45 | 232.44 |
| 95 | 232.43 | 232.42 | 232.41 | 232.40 | 232.40 |
| 100 | 232.39 | 232.38 | 232.37 | 232.36 | 232.35 |
| 105 | 232.34 | 232.34 | 232.33 | 232.32 | 232.31 |
| 110 | 232.31 | 232.30 | 232.29 | 232.28 | 232.28 |
| 115 | 232.27 | 232.26 | 232.26 | 232.25 | 232.25 |
| 120 | 232.24 | 232.23 | 232.23 | 232.22 | 232.22 |
| 125 | 232.21 | 232.21 | 232.20 | 232.20 | 232.20 |
| 130 | 232.19 | 232.19 | 232.18 | 232.18 | 232.17 |
| 135 | 232.17 | 232.17 | 232.16 | 232.16 | 232.16 |
| 140 | 232.15 | 232.15 | 232.15 | 232.14 | 232.14 |
| 145 | 232.14 | 232.13 | 232.13 | 232.13 | 232.12 |
| 150 | 232.12 | 232.12 | 232.12 | 232.11 | 232.11 |
| 155 | 232.11 | 232.11 | 232.10 | 232.10 | 232.10 |
| 160 | 232.10 | 232.10 | 232.09 | 232.09 | 232.09 |
| 165 | 232.09 | 232.09 | 232.08 | 232.08 | 232.08 |
| 170 | 232.08 | 232.08 | 232.07 | 232.07 | 232.07 |
| 175 | 232.07 | 232.07 | 232.07 | 232.06 | 232.06 |
| 180 | 232.06 | 232.06 | 232.06 | 232.06 | 232.05 |
| 185 | 232.05 | 232.05 | 232.05 | 232.05 | 232.05 |
| 190 | 232.05 | 232.04 | 232.04 | 232.04 | 232.04 |
| 195 | 232.04 | 232.04 | 232.04 | 232.04 | 232.03 |

# Basin 3E Drawdown

Subsection: Time vs. Elevation
Label: 1 (OUT)
Scenario: Drawdown

Return Event: 100 years
Storm Event:

**Time vs. Elevation (ft)**

**Output Time increment = 1 min**
**Time on left represents time for first value in each row.**

| Time (min) | Elevation (ft) | Elevation (ft) | Elevation (ft) | Elevation (ft) | Elevation (ft) |
|---|---|---|---|---|---|
| 200 | 232.03 | 232.03 | 232.03 | 232.03 | 232.03 |
| 205 | 232.03 | 232.03 | 232.02 | 232.02 | 232.02 |
| 210 | 232.02 | 232.02 | 232.02 | 232.02 | 232.02 |
| 215 | 232.02 | 232.02 | 232.01 | 232.01 | 232.01 |
| 220 | 232.01 | 232.01 | 232.01 | 232.01 | 232.01 |
| 225 | 232.01 | 232.01 | 232.01 | 232.01 | 232.00 |
| 230 | 232.00 | 232.00 | 232.00 | 232.00 | 232.00 |
| 235 | 232.00 | 232.00 | 232.00 | 232.00 | 232.00 |
| 240 | 232.00 | 232.00 | 231.99 | 231.99 | 231.99 |
| 245 | 231.99 | 231.99 | 231.99 | 231.99 | 231.99 |
| 250 | 231.99 | 231.99 | 231.99 | 231.99 | 231.99 |
| 255 | 231.99 | 231.98 | 231.98 | 231.98 | 231.98 |
| 260 | 231.98 | 231.98 | 231.98 | 231.98 | 231.98 |
| 265 | 231.98 | 231.98 | 231.98 | 231.98 | 231.98 |
| 270 | 231.98 | 231.98 | 231.97 | 231.97 | 231.97 |
| 275 | 231.97 | 231.97 | 231.97 | 231.97 | 231.97 |
| 280 | 231.97 | 231.97 | 231.97 | 231.97 | 231.97 |
| 285 | 231.97 | 231.97 | 231.97 | 231.96 | 231.96 |
| 290 | 231.96 | 231.96 | 231.96 | 231.96 | 231.96 |
| 295 | 231.96 | 231.96 | 231.96 | 231.96 | 231.96 |
| 300 | 231.96 | 231.96 | 231.96 | 231.96 | 231.96 |
| 305 | 231.95 | 231.95 | 231.95 | 231.95 | 231.95 |
| 310 | 231.95 | 231.95 | 231.95 | 231.95 | 231.95 |
| 315 | 231.95 | 231.95 | 231.95 | 231.95 | 231.95 |
| 320 | 231.95 | 231.95 | 231.95 | 231.95 | 231.94 |
| 325 | 231.94 | 231.94 | 231.94 | 231.94 | 231.94 |
| 330 | 231.94 | 231.94 | 231.94 | 231.94 | 231.94 |
| 335 | 231.94 | 231.94 | 231.94 | 231.94 | 231.94 |
| 340 | 231.94 | 231.94 | 231.94 | 231.93 | 231.93 |
| 345 | 231.93 | 231.93 | 231.93 | 231.93 | 231.93 |
| 350 | 231.93 | 231.93 | 231.93 | 231.93 | 231.93 |
| 355 | 231.93 | 231.93 | 231.93 | 231.93 | 231.93 |
| 360 | 231.93 | 231.92 | 231.92 | 231.92 | 231.92 |
| 365 | 231.92 | 231.92 | 231.92 | 231.92 | 231.92 |
| 370 | 231.92 | 231.92 | 231.92 | 231.92 | 231.92 |
| 375 | 231.92 | 231.92 | 231.92 | 231.92 | 231.92 |
| 380 | 231.91 | 231.91 | 231.91 | 231.91 | 231.91 |
| 385 | 231.91 | 231.91 | 231.91 | 231.91 | 231.91 |
| 390 | 231.91 | 231.91 | 231.91 | 231.91 | 231.91 |
| 395 | 231.91 | 231.91 | 231.91 | 231.91 | 231.90 |
| 400 | 231.90 | 231.90 | 231.90 | 231.90 | 231.90 |

# Basin 3E Drawdown

Subsection: Time vs. Elevation
Label: 1 (OUT)
Scenario: Drawdown

Return Event: 100 years
Storm Event:

**Time vs. Elevation (ft)**

**Output Time increment = 1 min**
**Time on left represents time for first value in each row.**

| Time (min) | Elevation (ft) | Elevation (ft) | Elevation (ft) | Elevation (ft) | Elevation (ft) |
|---|---|---|---|---|---|
| 405 | 231.90 | 231.90 | 231.90 | 231.90 | 231.90 |
| 410 | 231.90 | 231.90 | 231.90 | 231.90 | 231.90 |
| 415 | 231.90 | 231.90 | 231.90 | 231.89 | 231.89 |
| 420 | 231.89 | 231.89 | 231.89 | 231.89 | 231.89 |
| 425 | 231.89 | 231.89 | 231.89 | 231.89 | 231.89 |
| 430 | 231.89 | 231.89 | 231.89 | 231.89 | 231.89 |
| 435 | 231.89 | 231.89 | 231.88 | 231.88 | 231.88 |
| 440 | 231.88 | 231.88 | 231.88 | 231.88 | 231.88 |
| 445 | 231.88 | 231.88 | 231.88 | 231.88 | 231.88 |
| 450 | 231.88 | 231.88 | 231.88 | 231.88 | 231.88 |
| 455 | 231.88 | 231.87 | 231.87 | 231.87 | 231.87 |
| 460 | 231.87 | 231.87 | 231.87 | 231.87 | 231.87 |
| 465 | 231.87 | 231.87 | 231.87 | 231.87 | 231.87 |
| 470 | 231.87 | 231.87 | 231.87 | 231.87 | 231.87 |
| 475 | 231.86 | 231.86 | 231.86 | 231.86 | 231.86 |
| 480 | 231.86 | 231.86 | 231.86 | 231.86 | 231.86 |
| 485 | 231.86 | 231.86 | 231.86 | 231.86 | 231.86 |
| 490 | 231.86 | 231.86 | 231.86 | 231.86 | 231.85 |
| 495 | 231.85 | 231.85 | 231.85 | 231.85 | 231.85 |
| 500 | 231.85 | 231.85 | 231.85 | 231.85 | 231.85 |
| 505 | 231.85 | 231.85 | 231.85 | 231.85 | 231.85 |
| 510 | 231.85 | 231.85 | 231.85 | 231.84 | 231.84 |
| 515 | 231.84 | 231.84 | 231.84 | 231.84 | 231.84 |
| 520 | 231.84 | 231.84 | 231.84 | 231.84 | 231.84 |
| 525 | 231.84 | 231.84 | 231.84 | 231.84 | 231.84 |
| 530 | 231.84 | 231.84 | 231.83 | 231.83 | 231.83 |
| 535 | 231.83 | 231.83 | 231.83 | 231.83 | 231.83 |
| 540 | 231.83 | 231.83 | 231.83 | 231.83 | 231.83 |
| 545 | 231.83 | 231.83 | 231.83 | 231.83 | 231.83 |
| 550 | 231.83 | 231.83 | 231.82 | 231.82 | 231.82 |
| 555 | 231.82 | 231.82 | 231.82 | 231.82 | 231.82 |
| 560 | 231.82 | 231.82 | 231.82 | 231.82 | 231.82 |
| 565 | 231.82 | 231.82 | 231.82 | 231.82 | 231.82 |
| 570 | 231.82 | 231.81 | 231.81 | 231.81 | 231.81 |
| 575 | 231.81 | 231.81 | 231.81 | 231.81 | 231.81 |
| 580 | 231.81 | 231.81 | 231.81 | 231.81 | 231.81 |
| 585 | 231.81 | 231.81 | 231.81 | 231.81 | 231.81 |
| 590 | 231.81 | 231.80 | 231.80 | 231.80 | 231.80 |
| 595 | 231.80 | 231.80 | 231.80 | 231.80 | 231.80 |
| 600 | 231.80 | 231.80 | 231.80 | 231.80 | 231.80 |
| 605 | 231.80 | 231.80 | 231.80 | 231.80 | 231.80 |

# Basin 3E Drawdown

Subsection: Time vs. Elevation
Label: 1 (OUT)
Scenario: Drawdown

Return Event: 100 years
Storm Event:

**Time vs. Elevation (ft)**

**Output Time increment = 1 min**
**Time on left represents time for first value in each row.**

| Time (min) | Elevation (ft) | Elevation (ft) | Elevation (ft) | Elevation (ft) | Elevation (ft) |
|---|---|---|---|---|---|
| 610 | 231.79 | 231.79 | 231.79 | 231.79 | 231.79 |
| 615 | 231.79 | 231.79 | 231.79 | 231.79 | 231.79 |
| 620 | 231.79 | 231.79 | 231.79 | 231.79 | 231.79 |
| 625 | 231.79 | 231.79 | 231.79 | 231.79 | 231.79 |
| 630 | 231.78 | 231.78 | 231.78 | 231.78 | 231.78 |
| 635 | 231.78 | 231.78 | 231.78 | 231.78 | 231.78 |
| 640 | 231.78 | 231.78 | 231.78 | 231.78 | 231.78 |
| 645 | 231.78 | 231.78 | 231.78 | 231.78 | 231.77 |
| 650 | 231.77 | 231.77 | 231.77 | 231.77 | 231.77 |
| 655 | 231.77 | 231.77 | 231.77 | 231.77 | 231.77 |
| 660 | 231.77 | 231.77 | 231.77 | 231.77 | 231.77 |
| 665 | 231.77 | 231.77 | 231.77 | 231.77 | 231.76 |
| 670 | 231.76 | 231.76 | 231.76 | 231.76 | 231.76 |
| 675 | 231.76 | 231.76 | 231.76 | 231.76 | 231.76 |
| 680 | 231.76 | 231.76 | 231.76 | 231.76 | 231.76 |
| 685 | 231.76 | 231.76 | 231.76 | 231.76 | 231.75 |
| 690 | 231.75 | 231.75 | 231.75 | 231.75 | 231.75 |
| 695 | 231.75 | 231.75 | 231.75 | 231.75 | 231.75 |
| 700 | 231.75 | 231.75 | 231.75 | 231.75 | 231.75 |
| 705 | 231.75 | 231.75 | 231.75 | 231.74 | 231.74 |
| 710 | 231.74 | 231.74 | 231.74 | 231.74 | 231.74 |
| 715 | 231.74 | 231.74 | 231.74 | 231.74 | 231.74 |
| 720 | 231.74 | 231.74 | 231.74 | 231.74 | 231.74 |
| 725 | 231.74 | 231.74 | 231.74 | 231.73 | 231.73 |
| 730 | 231.73 | 231.73 | 231.73 | 231.73 | 231.73 |
| 735 | 231.73 | 231.73 | 231.73 | 231.73 | 231.73 |
| 740 | 231.73 | 231.73 | 231.73 | 231.73 | 231.73 |
| 745 | 231.73 | 231.73 | 231.73 | 231.73 | 231.72 |
| 750 | 231.72 | 231.72 | 231.72 | 231.72 | 231.72 |
| 755 | 231.72 | 231.72 | 231.72 | 231.72 | 231.72 |
| 760 | 231.72 | 231.72 | 231.72 | 231.72 | 231.72 |
| 765 | 231.72 | 231.72 | 231.72 | 231.72 | 231.71 |
| 770 | 231.71 | 231.71 | 231.71 | 231.71 | 231.71 |
| 775 | 231.71 | 231.71 | 231.71 | 231.71 | 231.71 |
| 780 | 231.71 | 231.71 | 231.71 | 231.71 | 231.71 |
| 785 | 231.71 | 231.71 | 231.71 | 231.71 | 231.70 |
| 790 | 231.70 | 231.70 | 231.70 | 231.70 | 231.70 |
| 795 | 231.70 | 231.70 | 231.70 | 231.70 | 231.70 |
| 800 | 231.70 | 231.70 | 231.70 | 231.70 | 231.70 |
| 805 | 231.70 | 231.70 | 231.70 | 231.70 | 231.69 |
| 810 | 231.69 | 231.69 | 231.69 | 231.69 | 231.69 |

# Basin 3E Drawdown

Subsection: Time vs. Elevation
Label: 1 (OUT)
Scenario: Drawdown

Return Event: 100 years
Storm Event:

**Time vs. Elevation (ft)**

**Output Time increment = 1 min**
**Time on left represents time for first value in each row.**

| Time (min) | Elevation (ft) | Elevation (ft) | Elevation (ft) | Elevation (ft) | Elevation (ft) |
|---|---|---|---|---|---|
| 815 | 231.69 | 231.69 | 231.69 | 231.69 | 231.69 |
| 820 | 231.69 | 231.69 | 231.69 | 231.69 | 231.69 |
| 825 | 231.69 | 231.69 | 231.69 | 231.69 | 231.69 |
| 830 | 231.68 | 231.68 | 231.68 | 231.68 | 231.68 |
| 835 | 231.68 | 231.68 | 231.68 | 231.68 | 231.68 |
| 840 | 231.68 | 231.68 | 231.68 | 231.68 | 231.68 |
| 845 | 231.68 | 231.68 | 231.68 | 231.68 | 231.68 |
| 850 | 231.67 | 231.67 | 231.67 | 231.67 | 231.67 |
| 855 | 231.67 | 231.67 | 231.67 | 231.67 | 231.67 |
| 860 | 231.67 | 231.67 | 231.67 | 231.67 | 231.67 |
| 865 | 231.67 | 231.67 | 231.67 | 231.67 | 231.67 |
| 870 | 231.66 | 231.66 | 231.66 | 231.66 | 231.66 |
| 875 | 231.66 | 231.66 | 231.66 | 231.66 | 231.66 |
| 880 | 231.66 | 231.66 | 231.66 | 231.66 | 231.66 |
| 885 | 231.66 | 231.66 | 231.66 | 231.66 | 231.66 |
| 890 | 231.66 | 231.65 | 231.65 | 231.65 | 231.65 |
| 895 | 231.65 | 231.65 | 231.65 | 231.65 | 231.65 |
| 900 | 231.65 | 231.65 | 231.65 | 231.65 | 231.65 |
| 905 | 231.65 | 231.65 | 231.65 | 231.65 | 231.65 |
| 910 | 231.65 | 231.64 | 231.64 | 231.64 | 231.64 |
| 915 | 231.64 | 231.64 | 231.64 | 231.64 | 231.64 |
| 920 | 231.64 | 231.64 | 231.64 | 231.64 | 231.64 |
| 925 | 231.64 | 231.64 | 231.64 | 231.64 | 231.64 |
| 930 | 231.64 | 231.64 | 231.63 | 231.63 | 231.63 |
| 935 | 231.63 | 231.63 | 231.63 | 231.63 | 231.63 |
| 940 | 231.63 | 231.63 | 231.63 | 231.63 | 231.63 |
| 945 | 231.63 | 231.63 | 231.63 | 231.63 | 231.63 |
| 950 | 231.63 | 231.63 | 231.63 | 231.62 | 231.62 |
| 955 | 231.62 | 231.62 | 231.62 | 231.62 | 231.62 |
| 960 | 231.62 | 231.62 | 231.62 | 231.62 | 231.62 |
| 965 | 231.62 | 231.62 | 231.62 | 231.62 | 231.62 |
| 970 | 231.62 | 231.62 | 231.62 | 231.62 | 231.61 |
| 975 | 231.61 | 231.61 | 231.61 | 231.61 | 231.61 |
| 980 | 231.61 | 231.61 | 231.61 | 231.61 | 231.61 |
| 985 | 231.61 | 231.61 | 231.61 | 231.61 | 231.61 |
| 990 | 231.61 | 231.61 | 231.61 | 231.61 | 231.61 |
| 995 | 231.61 | 231.60 | 231.60 | 231.60 | 231.60 |
| 1,000 | 231.60 | 231.60 | 231.60 | 231.60 | 231.60 |
| 1,005 | 231.60 | 231.60 | 231.60 | 231.60 | 231.60 |
| 1,010 | 231.60 | 231.60 | 231.60 | 231.60 | 231.60 |
| 1,015 | 231.60 | 231.60 | 231.59 | 231.59 | 231.59 |

# Basin 3E Drawdown

Subsection: Time vs. Elevation
Label: 1 (OUT)
Scenario: Drawdown

Return Event: 100 years
Storm Event:

**Time vs. Elevation (ft)**

**Output Time increment = 1 min**
**Time on left represents time for first value in each row.**

| Time (min) | Elevation (ft) | Elevation (ft) | Elevation (ft) | Elevation (ft) | Elevation (ft) |
|---|---|---|---|---|---|
| 1,020 | 231.59 | 231.59 | 231.59 | 231.59 | 231.59 |
| 1,025 | 231.59 | 231.59 | 231.59 | 231.59 | 231.59 |
| 1,030 | 231.59 | 231.59 | 231.59 | 231.59 | 231.59 |
| 1,035 | 231.59 | 231.59 | 231.59 | 231.58 | 231.58 |
| 1,040 | 231.58 | 231.58 | 231.58 | 231.58 | 231.58 |
| 1,045 | 231.58 | 231.58 | 231.58 | 231.58 | 231.58 |
| 1,050 | 231.58 | 231.58 | 231.58 | 231.58 | 231.58 |
| 1,055 | 231.58 | 231.58 | 231.58 | 231.58 | 231.57 |
| 1,060 | 231.57 | 231.57 | 231.57 | 231.57 | 231.57 |
| 1,065 | 231.57 | 231.57 | 231.57 | 231.57 | 231.57 |
| 1,070 | 231.57 | 231.57 | 231.57 | 231.57 | 231.57 |
| 1,075 | 231.57 | 231.57 | 231.57 | 231.57 | 231.57 |
| 1,080 | 231.57 | 231.56 | 231.56 | 231.56 | 231.56 |
| 1,085 | 231.56 | 231.56 | 231.56 | 231.56 | 231.56 |
| 1,090 | 231.56 | 231.56 | 231.56 | 231.56 | 231.56 |
| 1,095 | 231.56 | 231.56 | 231.56 | 231.56 | 231.56 |
| 1,100 | 231.56 | 231.56 | 231.55 | 231.55 | 231.55 |
| 1,105 | 231.55 | 231.55 | 231.55 | 231.55 | 231.55 |
| 1,110 | 231.55 | 231.55 | 231.55 | 231.55 | 231.55 |
| 1,115 | 231.55 | 231.55 | 231.55 | 231.55 | 231.55 |
| 1,120 | 231.55 | 231.55 | 231.55 | 231.55 | 231.54 |
| 1,125 | 231.54 | 231.54 | 231.54 | 231.54 | 231.54 |
| 1,130 | 231.54 | 231.54 | 231.54 | 231.54 | 231.54 |
| 1,135 | 231.54 | 231.54 | 231.54 | 231.54 | 231.54 |
| 1,140 | 231.54 | 231.54 | 231.54 | 231.54 | 231.54 |
| 1,145 | 231.54 | 231.53 | 231.53 | 231.53 | 231.53 |
| 1,150 | 231.53 | 231.53 | 231.53 | 231.53 | 231.53 |
| 1,155 | 231.53 | 231.53 | 231.53 | 231.53 | 231.53 |
| 1,160 | 231.53 | 231.53 | 231.53 | 231.53 | 231.53 |
| 1,165 | 231.53 | 231.53 | 231.53 | 231.52 | 231.52 |
| 1,170 | 231.52 | 231.52 | 231.52 | 231.52 | 231.52 |
| 1,175 | 231.52 | 231.52 | 231.52 | 231.52 | 231.52 |
| 1,180 | 231.52 | 231.52 | 231.52 | 231.52 | 231.52 |
| 1,185 | 231.52 | 231.52 | 231.52 | 231.52 | 231.52 |
| 1,190 | 231.52 | 231.51 | 231.51 | 231.51 | 231.51 |
| 1,195 | 231.51 | 231.51 | 231.51 | 231.51 | 231.51 |
| 1,200 | 231.51 | 231.51 | 231.51 | 231.51 | 231.51 |
| 1,205 | 231.51 | 231.51 | 231.51 | 231.51 | 231.51 |
| 1,210 | 231.51 | 231.51 | 231.51 | 231.51 | 231.50 |
| 1,215 | 231.50 | 231.50 | 231.50 | 231.50 | 231.50 |
| 1,220 | 231.50 | 231.50 | 231.50 | 231.50 | 231.50 |

# Basin 3E Drawdown

Subsection: Time vs. Elevation
Label: 1 (OUT)
Scenario: Drawdown

Return Event: 100 years
Storm Event:

**Time vs. Elevation (ft)**

**Output Time increment = 1 min**
**Time on left represents time for first value in each row.**

| Time (min) | Elevation (ft) | Elevation (ft) | Elevation (ft) | Elevation (ft) | Elevation (ft) |
|---|---|---|---|---|---|
| 1,225 | 231.50 | 231.50 | 231.50 | 231.50 | 231.50 |
| 1,230 | 231.50 | 231.50 | 231.50 | 231.50 | 231.50 |
| 1,235 | 231.50 | 231.49 | 231.49 | 231.49 | 231.49 |
| 1,240 | 231.49 | 231.49 | 231.49 | 231.49 | 231.49 |
| 1,245 | 231.49 | 231.49 | 231.49 | 231.49 | 231.49 |
| 1,250 | 231.49 | 231.49 | 231.49 | 231.49 | 231.49 |
| 1,255 | 231.49 | 231.49 | 231.49 | 231.48 | 231.48 |
| 1,260 | 231.48 | 231.48 | 231.48 | 231.48 | 231.48 |
| 1,265 | 231.48 | 231.48 | 231.48 | 231.48 | 231.48 |
| 1,270 | 231.48 | 231.48 | 231.48 | 231.48 | 231.48 |
| 1,275 | 231.48 | 231.48 | 231.48 | 231.48 | 231.48 |
| 1,280 | 231.48 | 231.47 | 231.47 | 231.47 | 231.47 |
| 1,285 | 231.47 | 231.47 | 231.47 | 231.47 | 231.47 |
| 1,290 | 231.47 | 231.47 | 231.47 | 231.47 | 231.47 |
| 1,295 | 231.47 | 231.47 | 231.47 | 231.47 | 231.47 |
| 1,300 | 231.47 | 231.47 | 231.47 | 231.47 | 231.46 |
| 1,305 | 231.46 | 231.46 | 231.46 | 231.46 | 231.46 |
| 1,310 | 231.46 | 231.46 | 231.46 | 231.46 | 231.46 |
| 1,315 | 231.46 | 231.46 | 231.46 | 231.46 | 231.46 |
| 1,320 | 231.46 | 231.46 | 231.46 | 231.46 | 231.46 |
| 1,325 | 231.46 | 231.46 | 231.45 | 231.45 | 231.45 |
| 1,330 | 231.45 | 231.45 | 231.45 | 231.45 | 231.45 |
| 1,335 | 231.45 | 231.45 | 231.45 | 231.45 | 231.45 |
| 1,340 | 231.45 | 231.45 | 231.45 | 231.45 | 231.45 |
| 1,345 | 231.45 | 231.45 | 231.45 | 231.45 | 231.45 |
| 1,350 | 231.45 | 231.44 | 231.44 | 231.44 | 231.44 |
| 1,355 | 231.44 | 231.44 | 231.44 | 231.44 | 231.44 |
| 1,360 | 231.44 | 231.44 | 231.44 | 231.44 | 231.44 |
| 1,365 | 231.44 | 231.44 | 231.44 | 231.44 | 231.44 |
| 1,370 | 231.44 | 231.44 | 231.44 | 231.44 | 231.43 |
| 1,375 | 231.43 | 231.43 | 231.43 | 231.43 | 231.43 |
| 1,380 | 231.43 | 231.43 | 231.43 | 231.43 | 231.43 |
| 1,385 | 231.43 | 231.43 | 231.43 | 231.43 | 231.43 |
| 1,390 | 231.43 | 231.43 | 231.43 | 231.43 | 231.43 |
| 1,395 | 231.43 | 231.43 | 231.43 | 231.42 | 231.42 |
| 1,400 | 231.42 | 231.42 | 231.42 | 231.42 | 231.42 |
| 1,405 | 231.42 | 231.42 | 231.42 | 231.42 | 231.42 |
| 1,410 | 231.42 | 231.42 | 231.42 | 231.42 | 231.42 |
| 1,415 | 231.42 | 231.42 | 231.42 | 231.42 | 231.42 |
| 1,420 | 231.42 | 231.42 | 231.41 | 231.41 | 231.41 |
| 1,425 | 231.41 | 231.41 | 231.41 | 231.41 | 231.41 |

# Basin 3E Drawdown

Subsection: Time vs. Elevation
Label: 1 (OUT)
Scenario: Drawdown

Return Event: 100 years
Storm Event:

**Time vs. Elevation (ft)**

**Output Time increment = 1 min**
**Time on left represents time for first value in each row.**

| Time (min) | Elevation (ft) | Elevation (ft) | Elevation (ft) | Elevation (ft) | Elevation (ft) |
|---|---|---|---|---|---|
| 1,430 | 231.41 | 231.41 | 231.41 | 231.41 | 231.41 |
| 1,435 | 231.41 | 231.41 | 231.41 | 231.41 | 231.41 |
| 1,440 | 231.41 | 231.41 | 231.41 | 231.41 | 231.41 |
| 1,445 | 231.41 | 231.41 | 231.40 | 231.40 | 231.40 |
| 1,450 | 231.40 | 231.40 | 231.40 | 231.40 | 231.40 |
| 1,455 | 231.40 | 231.40 | 231.40 | 231.40 | 231.40 |
| 1,460 | 231.40 | 231.40 | 231.40 | 231.40 | 231.40 |
| 1,465 | 231.40 | 231.40 | 231.40 | 231.40 | 231.40 |
| 1,470 | 231.40 | 231.39 | 231.39 | 231.39 | 231.39 |
| 1,475 | 231.39 | 231.39 | 231.39 | 231.39 | 231.39 |
| 1,480 | 231.39 | 231.39 | 231.39 | 231.39 | 231.39 |
| 1,485 | 231.39 | 231.39 | 231.39 | 231.39 | 231.39 |
| 1,490 | 231.39 | 231.39 | 231.39 | 231.39 | 231.39 |
| 1,495 | 231.38 | 231.38 | 231.38 | 231.38 | 231.38 |
| 1,500 | 231.38 | 231.38 | 231.38 | 231.38 | 231.38 |
| 1,505 | 231.38 | 231.38 | 231.38 | 231.38 | 231.38 |
| 1,510 | 231.38 | 231.38 | 231.38 | 231.38 | 231.38 |
| 1,515 | 231.38 | 231.38 | 231.38 | 231.38 | 231.38 |
| 1,520 | 231.37 | 231.37 | 231.37 | 231.37 | 231.37 |
| 1,525 | 231.37 | 231.37 | 231.37 | 231.37 | 231.37 |
| 1,530 | 231.37 | 231.37 | 231.37 | 231.37 | 231.37 |
| 1,535 | 231.37 | 231.37 | 231.37 | 231.37 | 231.37 |
| 1,540 | 231.37 | 231.37 | 231.37 | 231.37 | 231.37 |
| 1,545 | 231.36 | 231.36 | 231.36 | 231.36 | 231.36 |
| 1,550 | 231.36 | 231.36 | 231.36 | 231.36 | 231.36 |
| 1,555 | 231.36 | 231.36 | 231.36 | 231.36 | 231.36 |
| 1,560 | 231.36 | 231.36 | 231.36 | 231.36 | 231.36 |
| 1,565 | 231.36 | 231.36 | 231.36 | 231.36 | 231.36 |
| 1,570 | 231.35 | 231.35 | 231.35 | 231.35 | 231.35 |
| 1,575 | 231.35 | 231.35 | 231.35 | 231.35 | 231.35 |
| 1,580 | 231.35 | 231.35 | 231.35 | 231.35 | 231.35 |
| 1,585 | 231.35 | 231.35 | 231.35 | 231.35 | 231.35 |
| 1,590 | 231.35 | 231.35 | 231.35 | 231.35 | 231.35 |
| 1,595 | 231.35 | 231.34 | 231.34 | 231.34 | 231.34 |
| 1,600 | 231.34 | 231.34 | 231.34 | 231.34 | 231.34 |
| 1,605 | 231.34 | 231.34 | 231.34 | 231.34 | 231.34 |
| 1,610 | 231.34 | 231.34 | 231.34 | 231.34 | 231.34 |
| 1,615 | 231.34 | 231.34 | 231.34 | 231.34 | 231.34 |
| 1,620 | 231.34 | 231.34 | 231.33 | 231.33 | 231.33 |
| 1,625 | 231.33 | 231.33 | 231.33 | 231.33 | 231.33 |
| 1,630 | 231.33 | 231.33 | 231.33 | 231.33 | 231.33 |

# Basin 3E Drawdown

Subsection: Time vs. Elevation
Label: 1 (OUT)
Scenario: Drawdown

Return Event: 100 years
Storm Event:

**Time vs. Elevation (ft)**

**Output Time increment = 1 min**
**Time on left represents time for first value in each row.**

| Time (min) | Elevation (ft) | Elevation (ft) | Elevation (ft) | Elevation (ft) | Elevation (ft) |
|---|---|---|---|---|---|
| 1,635 | 231.33 | 231.33 | 231.33 | 231.33 | 231.33 |
| 1,640 | 231.33 | 231.33 | 231.33 | 231.33 | 231.33 |
| 1,645 | 231.33 | 231.33 | 231.33 | 231.32 | 231.32 |
| 1,650 | 231.32 | 231.32 | 231.32 | 231.32 | 231.32 |
| 1,655 | 231.32 | 231.32 | 231.32 | 231.32 | 231.32 |
| 1,660 | 231.32 | 231.32 | 231.32 | 231.32 | 231.32 |
| 1,665 | 231.32 | 231.32 | 231.32 | 231.32 | 231.32 |
| 1,670 | 231.32 | 231.32 | 231.32 | 231.32 | 231.32 |
| 1,675 | 231.31 | 231.31 | 231.31 | 231.31 | 231.31 |
| 1,680 | 231.31 | 231.31 | 231.31 | 231.31 | 231.31 |
| 1,685 | 231.31 | 231.31 | 231.31 | 231.31 | 231.31 |
| 1,690 | 231.31 | 231.31 | 231.31 | 231.31 | 231.31 |
| 1,695 | 231.31 | 231.31 | 231.31 | 231.31 | 231.31 |
| 1,700 | 231.31 | 231.31 | 231.30 | 231.30 | 231.30 |
| 1,705 | 231.30 | 231.30 | 231.30 | 231.30 | 231.30 |
| 1,710 | 231.30 | 231.30 | 231.30 | 231.30 | 231.30 |
| 1,715 | 231.30 | 231.30 | 231.30 | 231.30 | 231.30 |
| 1,720 | 231.30 | 231.30 | 231.30 | 231.30 | 231.30 |
| 1,725 | 231.30 | 231.30 | 231.30 | 231.30 | 231.30 |
| 1,730 | 231.29 | 231.29 | 231.29 | 231.29 | 231.29 |
| 1,735 | 231.29 | 231.29 | 231.29 | 231.29 | 231.29 |
| 1,740 | 231.29 | 231.29 | 231.29 | 231.29 | 231.29 |
| 1,745 | 231.29 | 231.29 | 231.29 | 231.29 | 231.29 |
| 1,750 | 231.29 | 231.29 | 231.29 | 231.29 | 231.29 |
| 1,755 | 231.29 | 231.29 | 231.28 | 231.28 | 231.28 |
| 1,760 | 231.28 | 231.28 | 231.28 | 231.28 | 231.28 |
| 1,765 | 231.28 | 231.28 | 231.28 | 231.28 | 231.28 |
| 1,770 | 231.28 | 231.28 | 231.28 | 231.28 | 231.28 |
| 1,775 | 231.28 | 231.28 | 231.28 | 231.28 | 231.28 |
| 1,780 | 231.28 | 231.28 | 231.28 | 231.28 | 231.28 |
| 1,785 | 231.27 | 231.27 | 231.27 | 231.27 | 231.27 |
| 1,790 | 231.27 | 231.27 | 231.27 | 231.27 | 231.27 |
| 1,795 | 231.27 | 231.27 | 231.27 | 231.27 | 231.27 |
| 1,800 | 231.27 | 231.27 | 231.27 | 231.27 | 231.27 |
| 1,805 | 231.27 | 231.27 | 231.27 | 231.27 | 231.27 |
| 1,810 | 231.27 | 231.27 | 231.27 | 231.26 | 231.26 |
| 1,815 | 231.26 | 231.26 | 231.26 | 231.26 | 231.26 |
| 1,820 | 231.26 | 231.26 | 231.26 | 231.26 | 231.26 |
| 1,825 | 231.26 | 231.26 | 231.26 | 231.26 | 231.26 |
| 1,830 | 231.26 | 231.26 | 231.26 | 231.26 | 231.26 |
| 1,835 | 231.26 | 231.26 | 231.26 | 231.26 | 231.26 |

# Basin 3E Drawdown

Subsection: Time vs. Elevation
Label: 1 (OUT)
Scenario: Drawdown

Return Event: 100 years
Storm Event:

**Time vs. Elevation (ft)**

**Output Time increment = 1 min**
**Time on left represents time for first value in each row.**

| Time (min) | Elevation (ft) | Elevation (ft) | Elevation (ft) | Elevation (ft) | Elevation (ft) |
|---|---|---|---|---|---|
| 1,840 | 231.26 | 231.26 | 231.25 | 231.25 | 231.25 |
| 1,845 | 231.25 | 231.25 | 231.25 | 231.25 | 231.25 |
| 1,850 | 231.25 | 231.25 | 231.25 | 231.25 | 231.25 |
| 1,855 | 231.25 | 231.25 | 231.25 | 231.25 | 231.25 |
| 1,860 | 231.25 | 231.25 | 231.25 | 231.25 | 231.25 |
| 1,865 | 231.25 | 231.25 | 231.25 | 231.25 | 231.25 |
| 1,870 | 231.25 | 231.24 | 231.24 | 231.24 | 231.24 |
| 1,875 | 231.24 | 231.24 | 231.24 | 231.24 | 231.24 |
| 1,880 | 231.24 | 231.24 | 231.24 | 231.24 | 231.24 |
| 1,885 | 231.24 | 231.24 | 231.24 | 231.24 | 231.24 |
| 1,890 | 231.24 | 231.24 | 231.24 | 231.24 | 231.24 |
| 1,895 | 231.24 | 231.24 | 231.24 | 231.24 | 231.24 |
| 1,900 | 231.24 | 231.23 | 231.23 | 231.23 | 231.23 |
| 1,905 | 231.23 | 231.23 | 231.23 | 231.23 | 231.23 |
| 1,910 | 231.23 | 231.23 | 231.23 | 231.23 | 231.23 |
| 1,915 | 231.23 | 231.23 | 231.23 | 231.23 | 231.23 |
| 1,920 | 231.23 | 231.23 | 231.23 | 231.23 | 231.23 |
| 1,925 | 231.23 | 231.23 | 231.23 | 231.23 | 231.23 |
| 1,930 | 231.23 | 231.23 | 231.22 | 231.22 | 231.22 |
| 1,935 | 231.22 | 231.22 | 231.22 | 231.22 | 231.22 |
| 1,940 | 231.22 | 231.22 | 231.22 | 231.22 | 231.22 |
| 1,945 | 231.22 | 231.22 | 231.22 | 231.22 | 231.22 |
| 1,950 | 231.22 | 231.22 | 231.22 | 231.22 | 231.22 |
| 1,955 | 231.22 | 231.22 | 231.22 | 231.22 | 231.22 |
| 1,960 | 231.22 | 231.22 | 231.22 | 231.21 | 231.21 |
| 1,965 | 231.21 | 231.21 | 231.21 | 231.21 | 231.21 |
| 1,970 | 231.21 | 231.21 | 231.21 | 231.21 | 231.21 |
| 1,975 | 231.21 | 231.21 | 231.21 | 231.21 | 231.21 |
| 1,980 | 231.21 | 231.21 | 231.21 | 231.21 | 231.21 |
| 1,985 | 231.21 | 231.21 | 231.21 | 231.21 | 231.21 |
| 1,990 | 231.21 | 231.21 | 231.21 | 231.21 | 231.21 |
| 1,995 | 231.20 | 231.20 | 231.20 | 231.20 | 231.20 |
| 2,000 | 231.20 | (N/A) | (N/A) | (N/A) | (N/A) |

# Basin 3E Drawdown

Subsection: Outlet Input Data
Label: Outlet#1
Scenario: Drawdown

Return Event: 100 years
Storm Event:

| Requested Pond Water Surface Elevations | |
|---|---|
| Minimum (Headwater) | 227.20 ft |
| Increment (Headwater) | 0.10 ft |
| Maximum (Headwater) | 235.20 ft |

## Outlet Connectivity

| Structure Type | Outlet ID | Direction | Outfall | E1 (ft) | E2 (ft) |
|---|---|---|---|---|---|
| Orifice-Circular | Orifice - MF | Forward | TW | 231.95 | 235.20 |
| Inlet Box | Riser - 1 | Forward | TW | 233.40 | 235.20 |
| Orifice-Circular | Orifice - LF | Forward | TW | 230.95 | 235.20 |
| Tailwater Settings | Tailwater | | | (N/A) | (N/A) |

# Basin 3E Drawdown

Subsection: Outlet Input Data
Label: Outlet#1
Scenario: Drawdown

Return Event: 100 years
Storm Event:

| Structure ID: Orifice - LF<br>Structure Type: Orifice-Circular | |
|---|---|
| Number of Openings | 1 |
| Elevation | 230.95 ft |
| Orifice Diameter | 1.0 in |
| Orifice Coefficient | 0.600 |

| Structure ID: Riser - 1<br>Structure Type: Inlet Box | |
|---|---|
| Number of Openings | 1 |
| Elevation | 233.40 ft |
| Orifice Area | 4.7 ft² |
| Orifice Coefficient | 0.600 |
| Weir Length | 9.20 ft |
| Weir Coefficient | 3.00 (ft^0.5)/s |
| K Reverse | 1.000 |
| Manning's n | 0.000 |
| Kev, Charged Riser | 0.000 |
| Weir Submergence | False |
| Orifice H to crest | True |

| Structure ID: Orifice - MF<br>Structure Type: Orifice-Circular | |
|---|---|
| Number of Openings | 2 |
| Elevation | 231.95 ft |
| Orifice Diameter | 4.0 in |
| Orifice Coefficient | 0.600 |

| Structure ID: TW<br>Structure Type: TW Setup, DS Channel | |
|---|---|
| Tailwater Type | Free Outfall |

| Convergence Tolerances | |
|---|---|
| Maximum Iterations | 80 |
| Tailwater Tolerance (Minimum) | 0.01 ft |
| Tailwater Tolerance (Maximum) | 0.10 ft |
| Headwater Tolerance (Minimum) | 0.01 ft |
| Headwater Tolerance (Maximum) | 0.10 ft |
| Flow Tolerance (Minimum) | 0.001 ft³/s |

# Basin 3E Drawdown

Subsection: Outlet Input Data
Label: Outlet#1
Scenario: Drawdown

Return Event: 100 years
Storm Event:

| Convergence Tolerances | |
|---|---|
| Flow Tolerance (Maximum) | 10.000 ft³/s |

# Basin 3E Drawdown

Subsection: Elevation-Volume-Flow Table (Pond)
Label: 1
Scenario: Drawdown

Return Event: 100 years
Storm Event:

| Infiltration | |
|---|---|
| Infiltration Method (Computed) | No Infiltration |

| Initial Conditions | |
|---|---|
| Elevation (Water Surface, Initial) | 235.20 ft |
| Volume (Initial) | 0.415 ac-ft |
| Flow (Initial Outlet) | 31.88 ft³/s |
| Flow (Initial Infiltration) | 0.00 ft³/s |
| Flow (Initial, Total) | 31.88 ft³/s |
| Time Increment | 1 min |

| Elevation (ft) | Outflow (ft³/s) | Storage (ac-ft) | Area (ft²) | Infiltration (ft³/s) | Flow (Total) (ft³/s) | 2S/t + O (ft³/s) |
|---|---|---|---|---|---|---|
| 227.20 | 0.00 | 0.000 | 10.000 | 0.00 | 0.00 | 0.00 |
| 227.30 | 0.00 | 0.000 | 10.000 | 0.00 | 0.00 | 0.03 |
| 227.40 | 0.00 | 0.000 | 10.000 | 0.00 | 0.00 | 0.07 |
| 227.50 | 0.00 | 0.000 | 10.000 | 0.00 | 0.00 | 0.10 |
| 227.60 | 0.00 | 0.000 | 10.000 | 0.00 | 0.00 | 0.13 |
| 227.70 | 0.00 | 0.000 | 10.000 | 0.00 | 0.00 | 0.17 |
| 227.80 | 0.00 | 0.000 | 10.000 | 0.00 | 0.00 | 0.20 |
| 227.90 | 0.00 | 0.000 | 10.000 | 0.00 | 0.00 | 0.23 |
| 228.00 | 0.00 | 0.000 | 10.000 | 0.00 | 0.00 | 0.27 |
| 228.10 | 0.00 | 0.000 | 10.000 | 0.00 | 0.00 | 0.30 |
| 228.20 | 0.00 | 0.000 | 10.000 | 0.00 | 0.00 | 0.33 |
| 228.30 | 0.00 | 0.000 | 10.000 | 0.00 | 0.00 | 0.37 |
| 228.40 | 0.00 | 0.000 | 10.000 | 0.00 | 0.00 | 0.40 |
| 228.50 | 0.00 | 0.000 | 10.000 | 0.00 | 0.00 | 0.43 |
| 228.60 | 0.00 | 0.000 | 10.000 | 0.00 | 0.00 | 0.47 |
| 228.70 | 0.00 | 0.000 | 10.000 | 0.00 | 0.00 | 0.50 |
| 228.80 | 0.00 | 0.000 | 10.000 | 0.00 | 0.00 | 0.53 |
| 228.90 | 0.00 | 0.000 | 10.000 | 0.00 | 0.00 | 0.57 |
| 229.00 | 0.00 | 0.000 | 10.000 | 0.00 | 0.00 | 0.60 |
| 229.10 | 0.00 | 0.000 | 10.000 | 0.00 | 0.00 | 0.63 |
| 229.20 | 0.00 | 0.000 | 10.000 | 0.00 | 0.00 | 0.67 |
| 229.30 | 0.00 | 0.000 | 10.000 | 0.00 | 0.00 | 0.70 |
| 229.40 | 0.00 | 0.001 | 10.000 | 0.00 | 0.00 | 0.73 |
| 229.50 | 0.00 | 0.001 | 10.000 | 0.00 | 0.00 | 0.77 |
| 229.60 | 0.00 | 0.001 | 10.000 | 0.00 | 0.00 | 0.80 |
| 229.70 | 0.00 | 0.001 | 10.000 | 0.00 | 0.00 | 0.83 |
| 229.80 | 0.00 | 0.001 | 10.000 | 0.00 | 0.00 | 0.87 |
| 229.90 | 0.00 | 0.001 | 10.000 | 0.00 | 0.00 | 0.90 |
| 230.00 | 0.00 | 0.001 | 10.000 | 0.00 | 0.00 | 0.93 |

# Basin 3E Drawdown

Subsection: Elevation-Volume-Flow Table (Pond) Return Event: 100 years
Label: 1 Storm Event:
Scenario: Drawdown

| Elevation (ft) | Outflow (ft³/s) | Storage (ac-ft) | Area (ft²) | Infiltration (ft³/s) | Flow (Total) (ft³/s) | 2S/t + O (ft³/s) |
|---|---|---|---|---|---|---|
| 230.10 | 0.00 | 0.001 | 10.000 | 0.00 | 0.00 | 0.97 |
| 230.20 | 0.00 | 0.001 | 1,600.000 | 0.00 | 0.00 | 1.19 |
| 230.30 | 0.00 | 0.005 | 1,665.523 | 0.00 | 0.00 | 6.63 |
| 230.40 | 0.00 | 0.008 | 1,732.361 | 0.00 | 0.00 | 12.29 |
| 230.50 | 0.00 | 0.013 | 1,800.514 | 0.00 | 0.00 | 18.18 |
| 230.60 | 0.00 | 0.017 | 1,869.981 | 0.00 | 0.00 | 24.30 |
| 230.70 | 0.00 | 0.021 | 1,940.764 | 0.00 | 0.00 | 30.65 |
| 230.80 | 0.00 | 0.026 | 2,012.861 | 0.00 | 0.00 | 37.24 |
| 230.90 | 0.00 | 0.030 | 2,086.273 | 0.00 | 0.00 | 44.07 |
| 230.95 | 0.00 | 0.033 | 2,123.472 | 0.00 | 0.00 | 47.58 |
| 231.00 | 0.00 | 0.035 | 2,161.000 | 0.00 | 0.00 | 51.15 |
| 231.10 | 0.01 | 0.040 | 2,232.031 | 0.00 | 0.01 | 58.48 |
| 231.20 | 0.01 | 0.045 | 2,304.211 | 0.00 | 0.01 | 66.04 |
| 231.30 | 0.01 | 0.051 | 2,377.540 | 0.00 | 0.01 | 73.85 |
| 231.40 | 0.02 | 0.056 | 2,452.017 | 0.00 | 0.02 | 81.90 |
| 231.50 | 0.02 | 0.062 | 2,527.643 | 0.00 | 0.02 | 90.20 |
| 231.60 | 0.02 | 0.068 | 2,604.417 | 0.00 | 0.02 | 98.76 |
| 231.70 | 0.02 | 0.074 | 2,682.340 | 0.00 | 0.02 | 107.57 |
| 231.80 | 0.02 | 0.080 | 2,761.411 | 0.00 | 0.02 | 116.64 |
| 231.90 | 0.03 | 0.087 | 2,841.631 | 0.00 | 0.03 | 125.98 |
| 231.95 | 0.03 | 0.090 | 2,882.172 | 0.00 | 0.03 | 130.75 |
| 232.00 | 0.04 | 0.093 | 2,923.000 | 0.00 | 0.04 | 135.60 |
| 232.10 | 0.11 | 0.100 | 3,002.857 | 0.00 | 0.11 | 145.55 |
| 232.20 | 0.23 | 0.107 | 3,083.790 | 0.00 | 0.23 | 155.82 |
| 232.30 | 0.39 | 0.114 | 3,165.800 | 0.00 | 0.39 | 166.39 |
| 232.40 | 0.48 | 0.122 | 3,248.886 | 0.00 | 0.48 | 177.17 |
| 232.50 | 0.55 | 0.129 | 3,333.047 | 0.00 | 0.55 | 188.21 |
| 232.60 | 0.62 | 0.137 | 3,418.286 | 0.00 | 0.62 | 199.53 |
| 232.70 | 0.68 | 0.145 | 3,504.600 | 0.00 | 0.68 | 211.13 |
| 232.80 | 0.73 | 0.153 | 3,591.990 | 0.00 | 0.73 | 223.01 |
| 232.90 | 0.78 | 0.161 | 3,680.457 | 0.00 | 0.78 | 235.18 |
| 233.00 | 0.83 | 0.170 | 3,770.000 | 0.00 | 0.83 | 247.64 |
| 233.10 | 0.87 | 0.179 | 3,860.925 | 0.00 | 0.87 | 260.40 |
| 233.20 | 0.91 | 0.188 | 3,952.933 | 0.00 | 0.91 | 273.47 |
| 233.30 | 0.95 | 0.197 | 4,046.024 | 0.00 | 0.95 | 286.84 |
| 233.40 | 0.99 | 0.206 | 4,140.199 | 0.00 | 0.99 | 300.52 |
| 233.50 | 1.90 | 0.216 | 4,235.457 | 0.00 | 1.90 | 315.39 |
| 233.60 | 3.53 | 0.226 | 4,331.799 | 0.00 | 3.53 | 331.30 |
| 233.70 | 5.64 | 0.236 | 4,429.224 | 0.00 | 5.64 | 348.00 |
| 233.80 | 8.12 | 0.246 | 4,527.733 | 0.00 | 8.12 | 365.41 |
| 233.90 | 10.92 | 0.257 | 4,627.325 | 0.00 | 10.92 | 383.48 |
| 234.00 | 14.03 | 0.267 | 4,728.000 | 0.00 | 14.03 | 402.17 |
| 234.10 | 17.39 | 0.278 | 4,825.795 | 0.00 | 17.39 | 421.46 |

# Basin 3E Drawdown

Subsection: Elevation-Volume-Flow Table (Pond) Return Event: 100 years
Label: 1 Storm Event:
Scenario: Drawdown

| Elevation (ft) | Outflow (ft³/s) | Storage (ac-ft) | Area (ft²) | Infiltration (ft³/s) | Flow (Total) (ft³/s) | 2S/t + O (ft³/s) |
|---|---|---|---|---|---|---|
| 234.20 | 21.01 | 0.289 | 4,924.591 | 0.00 | 21.01 | 441.33 |
| 234.30 | 22.75 | 0.301 | 5,024.389 | 0.00 | 22.75 | 459.65 |
| 234.40 | 23.94 | 0.313 | 5,125.187 | 0.00 | 23.94 | 477.76 |
| 234.50 | 25.07 | 0.324 | 5,226.986 | 0.00 | 25.07 | 496.14 |
| 234.60 | 26.15 | 0.337 | 5,329.787 | 0.00 | 26.15 | 514.82 |
| 234.70 | 27.19 | 0.349 | 5,433.589 | 0.00 | 27.19 | 533.80 |
| 234.80 | 28.19 | 0.361 | 5,538.391 | 0.00 | 28.19 | 553.08 |
| 234.90 | 29.16 | 0.374 | 5,644.195 | 0.00 | 29.16 | 572.69 |
| 235.00 | 30.09 | 0.387 | 5,751.000 | 0.00 | 30.09 | 592.61 |
| 235.10 | 31.00 | 0.401 | 6,095.490 | 0.00 | 31.00 | 613.26 |
| 235.20 | 31.88 | 0.415 | 6,450.000 | 0.00 | 31.88 | 635.05 |

# Basin 3E Drawdown

## Index

1

1 (Elevation-Volume-Flow Table (Pond))...

1 (Elevation-Volume-Flow Table (Pond), 100 years (Drawdown))...14, 15, 16

1 (OUT) (Time vs. Elevation)...

1 (OUT) (Time vs. Elevation, 100 years (Drawdown))...1, 2, 3, 4, 5, 6, 7, 8, 9, 10

O

Outlet#1 (Outlet Input Data)...

Outlet#1 (Outlet Input Data, 100 years (Drawdown))...11, 12, 13

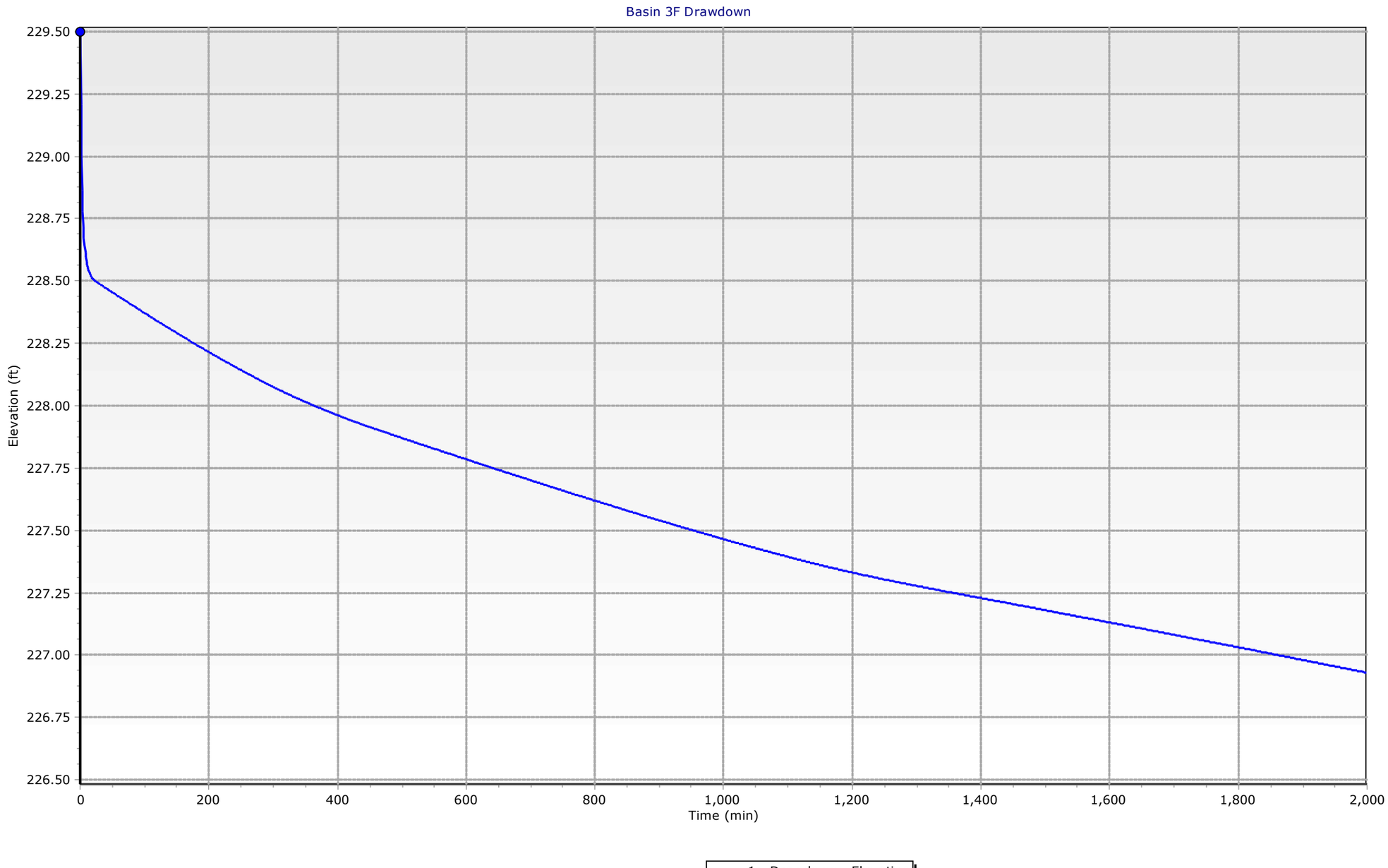
Basin 3F Drawdown
229.50
229.25
229.00
228.75
228.50
228.25
228.00
227.75
227.50
227.25
227.00
226.75
226.50
Elevation (ft)
0
200
400
600
800
1,000
1,200
1,400
1,600
1,800
2,000
Time (min)
1 - Drawdown - Elevation

# Table of Contents


| | | |
|---|---|---|
| 1 (OUT) | Time vs. Elevation | 1 |
| Outlet#1 w Underdrain | Outlet Input Data | 11 |
| 1 | Elevation-Volume-Flow Table (Pond) | 14 |

# Basin 3F Drawdown

Subsection: Time vs. Elevation
Label: 1 (OUT)
Scenario: Drawdown

Return Event: 100 years
Storm Event:

**Time vs. Elevation (ft)**

**Output Time increment = 1 min**
**Time on left represents time for first value in each row.**

| Time (min) | Elevation (ft) | Elevation (ft) | Elevation (ft) | Elevation (ft) | Elevation (ft) |
|---|---|---|---|---|---|
| 0 | 229.50 | 229.21 | 229.00 | 228.87 | 228.78 |
| 5 | 228.72 | 228.67 | 228.64 | 228.61 | 228.60 |
| 10 | 228.58 | 228.57 | 228.55 | 228.55 | 228.54 |
| 15 | 228.53 | 228.52 | 228.52 | 228.51 | 228.51 |
| 20 | 228.51 | 228.50 | 228.50 | 228.50 | 228.50 |
| 25 | 228.50 | 228.50 | 228.49 | 228.49 | 228.49 |
| 30 | 228.49 | 228.49 | 228.49 | 228.48 | 228.48 |
| 35 | 228.48 | 228.48 | 228.48 | 228.47 | 228.47 |
| 40 | 228.47 | 228.47 | 228.47 | 228.47 | 228.46 |
| 45 | 228.46 | 228.46 | 228.46 | 228.46 | 228.46 |
| 50 | 228.45 | 228.45 | 228.45 | 228.45 | 228.45 |
| 55 | 228.45 | 228.44 | 228.44 | 228.44 | 228.44 |
| 60 | 228.44 | 228.44 | 228.43 | 228.43 | 228.43 |
| 65 | 228.43 | 228.43 | 228.43 | 228.42 | 228.42 |
| 70 | 228.42 | 228.42 | 228.42 | 228.42 | 228.41 |
| 75 | 228.41 | 228.41 | 228.41 | 228.41 | 228.41 |
| 80 | 228.40 | 228.40 | 228.40 | 228.40 | 228.40 |
| 85 | 228.40 | 228.39 | 228.39 | 228.39 | 228.39 |
| 90 | 228.39 | 228.39 | 228.38 | 228.38 | 228.38 |
| 95 | 228.38 | 228.38 | 228.38 | 228.37 | 228.37 |
| 100 | 228.37 | 228.37 | 228.37 | 228.37 | 228.36 |
| 105 | 228.36 | 228.36 | 228.36 | 228.36 | 228.36 |
| 110 | 228.36 | 228.35 | 228.35 | 228.35 | 228.35 |
| 115 | 228.35 | 228.35 | 228.34 | 228.34 | 228.34 |
| 120 | 228.34 | 228.34 | 228.34 | 228.33 | 228.33 |
| 125 | 228.33 | 228.33 | 228.33 | 228.33 | 228.32 |
| 130 | 228.32 | 228.32 | 228.32 | 228.32 | 228.32 |
| 135 | 228.32 | 228.31 | 228.31 | 228.31 | 228.31 |
| 140 | 228.31 | 228.31 | 228.30 | 228.30 | 228.30 |
| 145 | 228.30 | 228.30 | 228.30 | 228.29 | 228.29 |
| 150 | 228.29 | 228.29 | 228.29 | 228.29 | 228.29 |
| 155 | 228.28 | 228.28 | 228.28 | 228.28 | 228.28 |
| 160 | 228.28 | 228.27 | 228.27 | 228.27 | 228.27 |
| 165 | 228.27 | 228.27 | 228.27 | 228.26 | 228.26 |
| 170 | 228.26 | 228.26 | 228.26 | 228.26 | 228.25 |
| 175 | 228.25 | 228.25 | 228.25 | 228.25 | 228.25 |
| 180 | 228.25 | 228.24 | 228.24 | 228.24 | 228.24 |
| 185 | 228.24 | 228.24 | 228.23 | 228.23 | 228.23 |
| 190 | 228.23 | 228.23 | 228.23 | 228.23 | 228.22 |
| 195 | 228.22 | 228.22 | 228.22 | 228.22 | 228.22 |

# Basin 3F Drawdown

Subsection: Time vs. Elevation
Label: 1 (OUT)
Scenario: Drawdown

Return Event: 100 years
Storm Event:

**Time vs. Elevation (ft)**

**Output Time increment = 1 min**
**Time on left represents time for first value in each row.**

| Time (min) | Elevation (ft) | Elevation (ft) | Elevation (ft) | Elevation (ft) | Elevation (ft) |
|---|---|---|---|---|---|
| 200 | 228.22 | 228.21 | 228.21 | 228.21 | 228.21 |
| 205 | 228.21 | 228.21 | 228.20 | 228.20 | 228.20 |
| 210 | 228.20 | 228.20 | 228.20 | 228.20 | 228.19 |
| 215 | 228.19 | 228.19 | 228.19 | 228.19 | 228.19 |
| 220 | 228.19 | 228.18 | 228.18 | 228.18 | 228.18 |
| 225 | 228.18 | 228.18 | 228.18 | 228.17 | 228.17 |
| 230 | 228.17 | 228.17 | 228.17 | 228.17 | 228.17 |
| 235 | 228.16 | 228.16 | 228.16 | 228.16 | 228.16 |
| 240 | 228.16 | 228.16 | 228.15 | 228.15 | 228.15 |
| 245 | 228.15 | 228.15 | 228.15 | 228.15 | 228.14 |
| 250 | 228.14 | 228.14 | 228.14 | 228.14 | 228.14 |
| 255 | 228.14 | 228.13 | 228.13 | 228.13 | 228.13 |
| 260 | 228.13 | 228.13 | 228.13 | 228.12 | 228.12 |
| 265 | 228.12 | 228.12 | 228.12 | 228.12 | 228.12 |
| 270 | 228.12 | 228.11 | 228.11 | 228.11 | 228.11 |
| 275 | 228.11 | 228.11 | 228.11 | 228.10 | 228.10 |
| 280 | 228.10 | 228.10 | 228.10 | 228.10 | 228.10 |
| 285 | 228.09 | 228.09 | 228.09 | 228.09 | 228.09 |
| 290 | 228.09 | 228.09 | 228.09 | 228.08 | 228.08 |
| 295 | 228.08 | 228.08 | 228.08 | 228.08 | 228.08 |
| 300 | 228.08 | 228.07 | 228.07 | 228.07 | 228.07 |
| 305 | 228.07 | 228.07 | 228.07 | 228.06 | 228.06 |
| 310 | 228.06 | 228.06 | 228.06 | 228.06 | 228.06 |
| 315 | 228.06 | 228.05 | 228.05 | 228.05 | 228.05 |
| 320 | 228.05 | 228.05 | 228.05 | 228.05 | 228.05 |
| 325 | 228.04 | 228.04 | 228.04 | 228.04 | 228.04 |
| 330 | 228.04 | 228.04 | 228.04 | 228.03 | 228.03 |
| 335 | 228.03 | 228.03 | 228.03 | 228.03 | 228.03 |
| 340 | 228.03 | 228.03 | 228.02 | 228.02 | 228.02 |
| 345 | 228.02 | 228.02 | 228.02 | 228.02 | 228.02 |
| 350 | 228.02 | 228.01 | 228.01 | 228.01 | 228.01 |
| 355 | 228.01 | 228.01 | 228.01 | 228.01 | 228.01 |
| 360 | 228.00 | 228.00 | 228.00 | 228.00 | 228.00 |
| 365 | 228.00 | 228.00 | 228.00 | 228.00 | 227.99 |
| 370 | 227.99 | 227.99 | 227.99 | 227.99 | 227.99 |
| 375 | 227.99 | 227.99 | 227.99 | 227.98 | 227.98 |
| 380 | 227.98 | 227.98 | 227.98 | 227.98 | 227.98 |
| 385 | 227.98 | 227.98 | 227.98 | 227.97 | 227.97 |
| 390 | 227.97 | 227.97 | 227.97 | 227.97 | 227.97 |
| 395 | 227.97 | 227.97 | 227.96 | 227.96 | 227.96 |
| 400 | 227.96 | 227.96 | 227.96 | 227.96 | 227.96 |

# Basin 3F Drawdown

Subsection: Time vs. Elevation
Label: 1 (OUT)
Scenario: Drawdown

Return Event: 100 years
Storm Event:

**Time vs. Elevation (ft)**

**Output Time increment = 1 min**
**Time on left represents time for first value in each row.**

| Time (min) | Elevation (ft) | Elevation (ft) | Elevation (ft) | Elevation (ft) | Elevation (ft) |
|---|---|---|---|---|---|
| 405 | 227.96 | 227.96 | 227.95 | 227.95 | 227.95 |
| 410 | 227.95 | 227.95 | 227.95 | 227.95 | 227.95 |
| 415 | 227.95 | 227.95 | 227.94 | 227.94 | 227.94 |
| 420 | 227.94 | 227.94 | 227.94 | 227.94 | 227.94 |
| 425 | 227.94 | 227.94 | 227.94 | 227.93 | 227.93 |
| 430 | 227.93 | 227.93 | 227.93 | 227.93 | 227.93 |
| 435 | 227.93 | 227.93 | 227.93 | 227.93 | 227.92 |
| 440 | 227.92 | 227.92 | 227.92 | 227.92 | 227.92 |
| 445 | 227.92 | 227.92 | 227.92 | 227.92 | 227.92 |
| 450 | 227.91 | 227.91 | 227.91 | 227.91 | 227.91 |
| 455 | 227.91 | 227.91 | 227.91 | 227.91 | 227.91 |
| 460 | 227.91 | 227.90 | 227.90 | 227.90 | 227.90 |
| 465 | 227.90 | 227.90 | 227.90 | 227.90 | 227.90 |
| 470 | 227.90 | 227.90 | 227.90 | 227.89 | 227.89 |
| 475 | 227.89 | 227.89 | 227.89 | 227.89 | 227.89 |
| 480 | 227.89 | 227.89 | 227.89 | 227.89 | 227.88 |
| 485 | 227.88 | 227.88 | 227.88 | 227.88 | 227.88 |
| 490 | 227.88 | 227.88 | 227.88 | 227.88 | 227.88 |
| 495 | 227.87 | 227.87 | 227.87 | 227.87 | 227.87 |
| 500 | 227.87 | 227.87 | 227.87 | 227.87 | 227.87 |
| 505 | 227.87 | 227.87 | 227.86 | 227.86 | 227.86 |
| 510 | 227.86 | 227.86 | 227.86 | 227.86 | 227.86 |
| 515 | 227.86 | 227.86 | 227.86 | 227.85 | 227.85 |
| 520 | 227.85 | 227.85 | 227.85 | 227.85 | 227.85 |
| 525 | 227.85 | 227.85 | 227.85 | 227.85 | 227.85 |
| 530 | 227.84 | 227.84 | 227.84 | 227.84 | 227.84 |
| 535 | 227.84 | 227.84 | 227.84 | 227.84 | 227.84 |
| 540 | 227.84 | 227.84 | 227.83 | 227.83 | 227.83 |
| 545 | 227.83 | 227.83 | 227.83 | 227.83 | 227.83 |
| 550 | 227.83 | 227.83 | 227.83 | 227.82 | 227.82 |
| 555 | 227.82 | 227.82 | 227.82 | 227.82 | 227.82 |
| 560 | 227.82 | 227.82 | 227.82 | 227.82 | 227.82 |
| 565 | 227.81 | 227.81 | 227.81 | 227.81 | 227.81 |
| 570 | 227.81 | 227.81 | 227.81 | 227.81 | 227.81 |
| 575 | 227.81 | 227.81 | 227.80 | 227.80 | 227.80 |
| 580 | 227.80 | 227.80 | 227.80 | 227.80 | 227.80 |
| 585 | 227.80 | 227.80 | 227.80 | 227.80 | 227.79 |
| 590 | 227.79 | 227.79 | 227.79 | 227.79 | 227.79 |
| 595 | 227.79 | 227.79 | 227.79 | 227.79 | 227.79 |
| 600 | 227.78 | 227.78 | 227.78 | 227.78 | 227.78 |
| 605 | 227.78 | 227.78 | 227.78 | 227.78 | 227.78 |

# Basin 3F Drawdown

Subsection: Time vs. Elevation
Label: 1 (OUT)
Scenario: Drawdown

Return Event: 100 years
Storm Event:

**Time vs. Elevation (ft)**

**Output Time increment = 1 min**
**Time on left represents time for first value in each row.**

| Time (min) | Elevation (ft) | Elevation (ft) | Elevation (ft) | Elevation (ft) | Elevation (ft) |
|---|---|---|---|---|---|
| 610 | 227.78 | 227.78 | 227.77 | 227.77 | 227.77 |
| 615 | 227.77 | 227.77 | 227.77 | 227.77 | 227.77 |
| 620 | 227.77 | 227.77 | 227.77 | 227.77 | 227.76 |
| 625 | 227.76 | 227.76 | 227.76 | 227.76 | 227.76 |
| 630 | 227.76 | 227.76 | 227.76 | 227.76 | 227.76 |
| 635 | 227.76 | 227.75 | 227.75 | 227.75 | 227.75 |
| 640 | 227.75 | 227.75 | 227.75 | 227.75 | 227.75 |
| 645 | 227.75 | 227.75 | 227.74 | 227.74 | 227.74 |
| 650 | 227.74 | 227.74 | 227.74 | 227.74 | 227.74 |
| 655 | 227.74 | 227.74 | 227.74 | 227.74 | 227.73 |
| 660 | 227.73 | 227.73 | 227.73 | 227.73 | 227.73 |
| 665 | 227.73 | 227.73 | 227.73 | 227.73 | 227.73 |
| 670 | 227.73 | 227.72 | 227.72 | 227.72 | 227.72 |
| 675 | 227.72 | 227.72 | 227.72 | 227.72 | 227.72 |
| 680 | 227.72 | 227.72 | 227.72 | 227.72 | 227.71 |
| 685 | 227.71 | 227.71 | 227.71 | 227.71 | 227.71 |
| 690 | 227.71 | 227.71 | 227.71 | 227.71 | 227.71 |
| 695 | 227.71 | 227.70 | 227.70 | 227.70 | 227.70 |
| 700 | 227.70 | 227.70 | 227.70 | 227.70 | 227.70 |
| 705 | 227.70 | 227.70 | 227.70 | 227.69 | 227.69 |
| 710 | 227.69 | 227.69 | 227.69 | 227.69 | 227.69 |
| 715 | 227.69 | 227.69 | 227.69 | 227.69 | 227.69 |
| 720 | 227.68 | 227.68 | 227.68 | 227.68 | 227.68 |
| 725 | 227.68 | 227.68 | 227.68 | 227.68 | 227.68 |
| 730 | 227.68 | 227.68 | 227.67 | 227.67 | 227.67 |
| 735 | 227.67 | 227.67 | 227.67 | 227.67 | 227.67 |
| 740 | 227.67 | 227.67 | 227.67 | 227.67 | 227.66 |
| 745 | 227.66 | 227.66 | 227.66 | 227.66 | 227.66 |
| 750 | 227.66 | 227.66 | 227.66 | 227.66 | 227.66 |
| 755 | 227.66 | 227.65 | 227.65 | 227.65 | 227.65 |
| 760 | 227.65 | 227.65 | 227.65 | 227.65 | 227.65 |
| 765 | 227.65 | 227.65 | 227.65 | 227.64 | 227.64 |
| 770 | 227.64 | 227.64 | 227.64 | 227.64 | 227.64 |
| 775 | 227.64 | 227.64 | 227.64 | 227.64 | 227.64 |
| 780 | 227.64 | 227.63 | 227.63 | 227.63 | 227.63 |
| 785 | 227.63 | 227.63 | 227.63 | 227.63 | 227.63 |
| 790 | 227.63 | 227.63 | 227.63 | 227.62 | 227.62 |
| 795 | 227.62 | 227.62 | 227.62 | 227.62 | 227.62 |
| 800 | 227.62 | 227.62 | 227.62 | 227.62 | 227.62 |
| 805 | 227.62 | 227.61 | 227.61 | 227.61 | 227.61 |
| 810 | 227.61 | 227.61 | 227.61 | 227.61 | 227.61 |

# Basin 3F Drawdown

Subsection: Time vs. Elevation
Label: 1 (OUT)
Scenario: Drawdown

Return Event: 100 years
Storm Event:

**Time vs. Elevation (ft)**

**Output Time increment = 1 min**
**Time on left represents time for first value in each row.**

| Time (min) | Elevation (ft) | Elevation (ft) | Elevation (ft) | Elevation (ft) | Elevation (ft) |
|---|---|---|---|---|---|
| 815 | 227.61 | 227.61 | 227.61 | 227.60 | 227.60 |
| 820 | 227.60 | 227.60 | 227.60 | 227.60 | 227.60 |
| 825 | 227.60 | 227.60 | 227.60 | 227.60 | 227.60 |
| 830 | 227.60 | 227.59 | 227.59 | 227.59 | 227.59 |
| 835 | 227.59 | 227.59 | 227.59 | 227.59 | 227.59 |
| 840 | 227.59 | 227.59 | 227.59 | 227.58 | 227.58 |
| 845 | 227.58 | 227.58 | 227.58 | 227.58 | 227.58 |
| 850 | 227.58 | 227.58 | 227.58 | 227.58 | 227.58 |
| 855 | 227.58 | 227.57 | 227.57 | 227.57 | 227.57 |
| 860 | 227.57 | 227.57 | 227.57 | 227.57 | 227.57 |
| 865 | 227.57 | 227.57 | 227.57 | 227.56 | 227.56 |
| 870 | 227.56 | 227.56 | 227.56 | 227.56 | 227.56 |
| 875 | 227.56 | 227.56 | 227.56 | 227.56 | 227.56 |
| 880 | 227.56 | 227.55 | 227.55 | 227.55 | 227.55 |
| 885 | 227.55 | 227.55 | 227.55 | 227.55 | 227.55 |
| 890 | 227.55 | 227.55 | 227.55 | 227.55 | 227.54 |
| 895 | 227.54 | 227.54 | 227.54 | 227.54 | 227.54 |
| 900 | 227.54 | 227.54 | 227.54 | 227.54 | 227.54 |
| 905 | 227.54 | 227.54 | 227.53 | 227.53 | 227.53 |
| 910 | 227.53 | 227.53 | 227.53 | 227.53 | 227.53 |
| 915 | 227.53 | 227.53 | 227.53 | 227.53 | 227.53 |
| 920 | 227.52 | 227.52 | 227.52 | 227.52 | 227.52 |
| 925 | 227.52 | 227.52 | 227.52 | 227.52 | 227.52 |
| 930 | 227.52 | 227.52 | 227.52 | 227.51 | 227.51 |
| 935 | 227.51 | 227.51 | 227.51 | 227.51 | 227.51 |
| 940 | 227.51 | 227.51 | 227.51 | 227.51 | 227.51 |
| 945 | 227.51 | 227.50 | 227.50 | 227.50 | 227.50 |
| 950 | 227.50 | 227.50 | 227.50 | 227.50 | 227.50 |
| 955 | 227.50 | 227.50 | 227.50 | 227.50 | 227.50 |
| 960 | 227.49 | 227.49 | 227.49 | 227.49 | 227.49 |
| 965 | 227.49 | 227.49 | 227.49 | 227.49 | 227.49 |
| 970 | 227.49 | 227.49 | 227.49 | 227.48 | 227.48 |
| 975 | 227.48 | 227.48 | 227.48 | 227.48 | 227.48 |
| 980 | 227.48 | 227.48 | 227.48 | 227.48 | 227.48 |
| 985 | 227.48 | 227.47 | 227.47 | 227.47 | 227.47 |
| 990 | 227.47 | 227.47 | 227.47 | 227.47 | 227.47 |
| 995 | 227.47 | 227.47 | 227.47 | 227.47 | 227.47 |
| 1,000 | 227.46 | 227.46 | 227.46 | 227.46 | 227.46 |
| 1,005 | 227.46 | 227.46 | 227.46 | 227.46 | 227.46 |
| 1,010 | 227.46 | 227.46 | 227.46 | 227.45 | 227.45 |
| 1,015 | 227.45 | 227.45 | 227.45 | 227.45 | 227.45 |

# Basin 3F Drawdown

Subsection: Time vs. Elevation
Label: 1 (OUT)
Scenario: Drawdown

Return Event: 100 years
Storm Event:

**Time vs. Elevation (ft)**

**Output Time increment = 1 min**
**Time on left represents time for first value in each row.**

| Time (min) | Elevation (ft) | Elevation (ft) | Elevation (ft) | Elevation (ft) | Elevation (ft) |
|---|---|---|---|---|---|
| 1,020 | 227.45 | 227.45 | 227.45 | 227.45 | 227.45 |
| 1,025 | 227.45 | 227.45 | 227.44 | 227.44 | 227.44 |
| 1,030 | 227.44 | 227.44 | 227.44 | 227.44 | 227.44 |
| 1,035 | 227.44 | 227.44 | 227.44 | 227.44 | 227.44 |
| 1,040 | 227.44 | 227.43 | 227.43 | 227.43 | 227.43 |
| 1,045 | 227.43 | 227.43 | 227.43 | 227.43 | 227.43 |
| 1,050 | 227.43 | 227.43 | 227.43 | 227.43 | 227.43 |
| 1,055 | 227.42 | 227.42 | 227.42 | 227.42 | 227.42 |
| 1,060 | 227.42 | 227.42 | 227.42 | 227.42 | 227.42 |
| 1,065 | 227.42 | 227.42 | 227.42 | 227.42 | 227.42 |
| 1,070 | 227.41 | 227.41 | 227.41 | 227.41 | 227.41 |
| 1,075 | 227.41 | 227.41 | 227.41 | 227.41 | 227.41 |
| 1,080 | 227.41 | 227.41 | 227.41 | 227.41 | 227.40 |
| 1,085 | 227.40 | 227.40 | 227.40 | 227.40 | 227.40 |
| 1,090 | 227.40 | 227.40 | 227.40 | 227.40 | 227.40 |
| 1,095 | 227.40 | 227.40 | 227.40 | 227.40 | 227.39 |
| 1,100 | 227.39 | 227.39 | 227.39 | 227.39 | 227.39 |
| 1,105 | 227.39 | 227.39 | 227.39 | 227.39 | 227.39 |
| 1,110 | 227.39 | 227.39 | 227.39 | 227.38 | 227.38 |
| 1,115 | 227.38 | 227.38 | 227.38 | 227.38 | 227.38 |
| 1,120 | 227.38 | 227.38 | 227.38 | 227.38 | 227.38 |
| 1,125 | 227.38 | 227.38 | 227.38 | 227.38 | 227.37 |
| 1,130 | 227.37 | 227.37 | 227.37 | 227.37 | 227.37 |
| 1,135 | 227.37 | 227.37 | 227.37 | 227.37 | 227.37 |
| 1,140 | 227.37 | 227.37 | 227.37 | 227.37 | 227.36 |
| 1,145 | 227.36 | 227.36 | 227.36 | 227.36 | 227.36 |
| 1,150 | 227.36 | 227.36 | 227.36 | 227.36 | 227.36 |
| 1,155 | 227.36 | 227.36 | 227.36 | 227.36 | 227.36 |
| 1,160 | 227.35 | 227.35 | 227.35 | 227.35 | 227.35 |
| 1,165 | 227.35 | 227.35 | 227.35 | 227.35 | 227.35 |
| 1,170 | 227.35 | 227.35 | 227.35 | 227.35 | 227.35 |
| 1,175 | 227.35 | 227.34 | 227.34 | 227.34 | 227.34 |
| 1,180 | 227.34 | 227.34 | 227.34 | 227.34 | 227.34 |
| 1,185 | 227.34 | 227.34 | 227.34 | 227.34 | 227.34 |
| 1,190 | 227.34 | 227.34 | 227.34 | 227.33 | 227.33 |
| 1,195 | 227.33 | 227.33 | 227.33 | 227.33 | 227.33 |
| 1,200 | 227.33 | 227.33 | 227.33 | 227.33 | 227.33 |
| 1,205 | 227.33 | 227.33 | 227.33 | 227.33 | 227.33 |
| 1,210 | 227.32 | 227.32 | 227.32 | 227.32 | 227.32 |
| 1,215 | 227.32 | 227.32 | 227.32 | 227.32 | 227.32 |
| 1,220 | 227.32 | 227.32 | 227.32 | 227.32 | 227.32 |

# Basin 3F Drawdown

Subsection: Time vs. Elevation
Label: 1 (OUT)
Scenario: Drawdown

Return Event: 100 years
Storm Event:

**Time vs. Elevation (ft)**

**Output Time increment = 1 min**
**Time on left represents time for first value in each row.**

| Time (min) | Elevation (ft) | Elevation (ft) | Elevation (ft) | Elevation (ft) | Elevation (ft) |
|---|---|---|---|---|---|
| 1,225 | 227.32 | 227.32 | 227.32 | 227.31 | 227.31 |
| 1,230 | 227.31 | 227.31 | 227.31 | 227.31 | 227.31 |
| 1,235 | 227.31 | 227.31 | 227.31 | 227.31 | 227.31 |
| 1,240 | 227.31 | 227.31 | 227.31 | 227.31 | 227.31 |
| 1,245 | 227.31 | 227.31 | 227.30 | 227.30 | 227.30 |
| 1,250 | 227.30 | 227.30 | 227.30 | 227.30 | 227.30 |
| 1,255 | 227.30 | 227.30 | 227.30 | 227.30 | 227.30 |
| 1,260 | 227.30 | 227.30 | 227.30 | 227.30 | 227.30 |
| 1,265 | 227.30 | 227.29 | 227.29 | 227.29 | 227.29 |
| 1,270 | 227.29 | 227.29 | 227.29 | 227.29 | 227.29 |
| 1,275 | 227.29 | 227.29 | 227.29 | 227.29 | 227.29 |
| 1,280 | 227.29 | 227.29 | 227.29 | 227.29 | 227.29 |
| 1,285 | 227.28 | 227.28 | 227.28 | 227.28 | 227.28 |
| 1,290 | 227.28 | 227.28 | 227.28 | 227.28 | 227.28 |
| 1,295 | 227.28 | 227.28 | 227.28 | 227.28 | 227.28 |
| 1,300 | 227.28 | 227.28 | 227.28 | 227.28 | 227.28 |
| 1,305 | 227.27 | 227.27 | 227.27 | 227.27 | 227.27 |
| 1,310 | 227.27 | 227.27 | 227.27 | 227.27 | 227.27 |
| 1,315 | 227.27 | 227.27 | 227.27 | 227.27 | 227.27 |
| 1,320 | 227.27 | 227.27 | 227.27 | 227.27 | 227.27 |
| 1,325 | 227.26 | 227.26 | 227.26 | 227.26 | 227.26 |
| 1,330 | 227.26 | 227.26 | 227.26 | 227.26 | 227.26 |
| 1,335 | 227.26 | 227.26 | 227.26 | 227.26 | 227.26 |
| 1,340 | 227.26 | 227.26 | 227.26 | 227.26 | 227.26 |
| 1,345 | 227.25 | 227.25 | 227.25 | 227.25 | 227.25 |
| 1,350 | 227.25 | 227.25 | 227.25 | 227.25 | 227.25 |
| 1,355 | 227.25 | 227.25 | 227.25 | 227.25 | 227.25 |
| 1,360 | 227.25 | 227.25 | 227.25 | 227.25 | 227.25 |
| 1,365 | 227.25 | 227.24 | 227.24 | 227.24 | 227.24 |
| 1,370 | 227.24 | 227.24 | 227.24 | 227.24 | 227.24 |
| 1,375 | 227.24 | 227.24 | 227.24 | 227.24 | 227.24 |
| 1,380 | 227.24 | 227.24 | 227.24 | 227.24 | 227.24 |
| 1,385 | 227.24 | 227.24 | 227.23 | 227.23 | 227.23 |
| 1,390 | 227.23 | 227.23 | 227.23 | 227.23 | 227.23 |
| 1,395 | 227.23 | 227.23 | 227.23 | 227.23 | 227.23 |
| 1,400 | 227.23 | 227.23 | 227.23 | 227.23 | 227.23 |
| 1,405 | 227.23 | 227.23 | 227.22 | 227.22 | 227.22 |
| 1,410 | 227.22 | 227.22 | 227.22 | 227.22 | 227.22 |
| 1,415 | 227.22 | 227.22 | 227.22 | 227.22 | 227.22 |
| 1,420 | 227.22 | 227.22 | 227.22 | 227.22 | 227.22 |
| 1,425 | 227.22 | 227.22 | 227.22 | 227.21 | 227.21 |

# Basin 3F Drawdown

Subsection: Time vs. Elevation
Label: 1 (OUT)
Scenario: Drawdown

Return Event: 100 years
Storm Event:

**Time vs. Elevation (ft)**

**Output Time increment = 1 min**
**Time on left represents time for first value in each row.**

| Time (min) | Elevation (ft) | Elevation (ft) | Elevation (ft) | Elevation (ft) | Elevation (ft) |
|---|---|---|---|---|---|
| 1,430 | 227.21 | 227.21 | 227.21 | 227.21 | 227.21 |
| 1,435 | 227.21 | 227.21 | 227.21 | 227.21 | 227.21 |
| 1,440 | 227.21 | 227.21 | 227.21 | 227.21 | 227.21 |
| 1,445 | 227.21 | 227.21 | 227.21 | 227.21 | 227.20 |
| 1,450 | 227.20 | 227.20 | 227.20 | 227.20 | 227.20 |
| 1,455 | 227.20 | 227.20 | 227.20 | 227.20 | 227.20 |
| 1,460 | 227.20 | 227.20 | 227.20 | 227.20 | 227.20 |
| 1,465 | 227.20 | 227.20 | 227.20 | 227.20 | 227.19 |
| 1,470 | 227.19 | 227.19 | 227.19 | 227.19 | 227.19 |
| 1,475 | 227.19 | 227.19 | 227.19 | 227.19 | 227.19 |
| 1,480 | 227.19 | 227.19 | 227.19 | 227.19 | 227.19 |
| 1,485 | 227.19 | 227.19 | 227.19 | 227.19 | 227.18 |
| 1,490 | 227.18 | 227.18 | 227.18 | 227.18 | 227.18 |
| 1,495 | 227.18 | 227.18 | 227.18 | 227.18 | 227.18 |
| 1,500 | 227.18 | 227.18 | 227.18 | 227.18 | 227.18 |
| 1,505 | 227.18 | 227.18 | 227.18 | 227.18 | 227.18 |
| 1,510 | 227.17 | 227.17 | 227.17 | 227.17 | 227.17 |
| 1,515 | 227.17 | 227.17 | 227.17 | 227.17 | 227.17 |
| 1,520 | 227.17 | 227.17 | 227.17 | 227.17 | 227.17 |
| 1,525 | 227.17 | 227.17 | 227.17 | 227.17 | 227.17 |
| 1,530 | 227.16 | 227.16 | 227.16 | 227.16 | 227.16 |
| 1,535 | 227.16 | 227.16 | 227.16 | 227.16 | 227.16 |
| 1,540 | 227.16 | 227.16 | 227.16 | 227.16 | 227.16 |
| 1,545 | 227.16 | 227.16 | 227.16 | 227.16 | 227.16 |
| 1,550 | 227.15 | 227.15 | 227.15 | 227.15 | 227.15 |
| 1,555 | 227.15 | 227.15 | 227.15 | 227.15 | 227.15 |
| 1,560 | 227.15 | 227.15 | 227.15 | 227.15 | 227.15 |
| 1,565 | 227.15 | 227.15 | 227.15 | 227.15 | 227.15 |
| 1,570 | 227.15 | 227.14 | 227.14 | 227.14 | 227.14 |
| 1,575 | 227.14 | 227.14 | 227.14 | 227.14 | 227.14 |
| 1,580 | 227.14 | 227.14 | 227.14 | 227.14 | 227.14 |
| 1,585 | 227.14 | 227.14 | 227.14 | 227.14 | 227.14 |
| 1,590 | 227.14 | 227.13 | 227.13 | 227.13 | 227.13 |
| 1,595 | 227.13 | 227.13 | 227.13 | 227.13 | 227.13 |
| 1,600 | 227.13 | 227.13 | 227.13 | 227.13 | 227.13 |
| 1,605 | 227.13 | 227.13 | 227.13 | 227.13 | 227.13 |
| 1,610 | 227.13 | 227.13 | 227.12 | 227.12 | 227.12 |
| 1,615 | 227.12 | 227.12 | 227.12 | 227.12 | 227.12 |
| 1,620 | 227.12 | 227.12 | 227.12 | 227.12 | 227.12 |
| 1,625 | 227.12 | 227.12 | 227.12 | 227.12 | 227.12 |
| 1,630 | 227.12 | 227.12 | 227.11 | 227.11 | 227.11 |

# Basin 3F Drawdown

Subsection: Time vs. Elevation
Label: 1 (OUT)
Scenario: Drawdown

Return Event: 100 years
Storm Event:

**Time vs. Elevation (ft)**

**Output Time increment = 1 min**
**Time on left represents time for first value in each row.**

| Time (min) | Elevation (ft) | Elevation (ft) | Elevation (ft) | Elevation (ft) | Elevation (ft) |
|---|---|---|---|---|---|
| 1,635 | 227.11 | 227.11 | 227.11 | 227.11 | 227.11 |
| 1,640 | 227.11 | 227.11 | 227.11 | 227.11 | 227.11 |
| 1,645 | 227.11 | 227.11 | 227.11 | 227.11 | 227.11 |
| 1,650 | 227.11 | 227.11 | 227.10 | 227.10 | 227.10 |
| 1,655 | 227.10 | 227.10 | 227.10 | 227.10 | 227.10 |
| 1,660 | 227.10 | 227.10 | 227.10 | 227.10 | 227.10 |
| 1,665 | 227.10 | 227.10 | 227.10 | 227.10 | 227.10 |
| 1,670 | 227.10 | 227.10 | 227.10 | 227.09 | 227.09 |
| 1,675 | 227.09 | 227.09 | 227.09 | 227.09 | 227.09 |
| 1,680 | 227.09 | 227.09 | 227.09 | 227.09 | 227.09 |
| 1,685 | 227.09 | 227.09 | 227.09 | 227.09 | 227.09 |
| 1,690 | 227.09 | 227.09 | 227.08 | 227.08 | 227.08 |
| 1,695 | 227.08 | 227.08 | 227.08 | 227.08 | 227.08 |
| 1,700 | 227.08 | 227.08 | 227.08 | 227.08 | 227.08 |
| 1,705 | 227.08 | 227.08 | 227.08 | 227.08 | 227.08 |
| 1,710 | 227.08 | 227.08 | 227.07 | 227.07 | 227.07 |
| 1,715 | 227.07 | 227.07 | 227.07 | 227.07 | 227.07 |
| 1,720 | 227.07 | 227.07 | 227.07 | 227.07 | 227.07 |
| 1,725 | 227.07 | 227.07 | 227.07 | 227.07 | 227.07 |
| 1,730 | 227.07 | 227.07 | 227.06 | 227.06 | 227.06 |
| 1,735 | 227.06 | 227.06 | 227.06 | 227.06 | 227.06 |
| 1,740 | 227.06 | 227.06 | 227.06 | 227.06 | 227.06 |
| 1,745 | 227.06 | 227.06 | 227.06 | 227.06 | 227.06 |
| 1,750 | 227.06 | 227.06 | 227.05 | 227.05 | 227.05 |
| 1,755 | 227.05 | 227.05 | 227.05 | 227.05 | 227.05 |
| 1,760 | 227.05 | 227.05 | 227.05 | 227.05 | 227.05 |
| 1,765 | 227.05 | 227.05 | 227.05 | 227.05 | 227.05 |
| 1,770 | 227.05 | 227.05 | 227.04 | 227.04 | 227.04 |
| 1,775 | 227.04 | 227.04 | 227.04 | 227.04 | 227.04 |
| 1,780 | 227.04 | 227.04 | 227.04 | 227.04 | 227.04 |
| 1,785 | 227.04 | 227.04 | 227.04 | 227.04 | 227.04 |
| 1,790 | 227.04 | 227.04 | 227.03 | 227.03 | 227.03 |
| 1,795 | 227.03 | 227.03 | 227.03 | 227.03 | 227.03 |
| 1,800 | 227.03 | 227.03 | 227.03 | 227.03 | 227.03 |
| 1,805 | 227.03 | 227.03 | 227.03 | 227.03 | 227.03 |
| 1,810 | 227.03 | 227.03 | 227.02 | 227.02 | 227.02 |
| 1,815 | 227.02 | 227.02 | 227.02 | 227.02 | 227.02 |
| 1,820 | 227.02 | 227.02 | 227.02 | 227.02 | 227.02 |
| 1,825 | 227.02 | 227.02 | 227.02 | 227.02 | 227.02 |
| 1,830 | 227.02 | 227.02 | 227.01 | 227.01 | 227.01 |
| 1,835 | 227.01 | 227.01 | 227.01 | 227.01 | 227.01 |

# Basin 3F Drawdown

Subsection: Time vs. Elevation
Label: 1 (OUT)
Scenario: Drawdown

Return Event: 100 years
Storm Event:

**Time vs. Elevation (ft)**

**Output Time increment = 1 min**
**Time on left represents time for first value in each row.**

| Time (min) | Elevation (ft) | Elevation (ft) | Elevation (ft) | Elevation (ft) | Elevation (ft) |
|---|---|---|---|---|---|
| 1,840 | 227.01 | 227.01 | 227.01 | 227.01 | 227.01 |
| 1,845 | 227.01 | 227.01 | 227.01 | 227.01 | 227.01 |
| 1,850 | 227.01 | 227.01 | 227.00 | 227.00 | 227.00 |
| 1,855 | 227.00 | 227.00 | 227.00 | 227.00 | 227.00 |
| 1,860 | 227.00 | 227.00 | 227.00 | 227.00 | 227.00 |
| 1,865 | 227.00 | 227.00 | 227.00 | 227.00 | 227.00 |
| 1,870 | 227.00 | 227.00 | 226.99 | 226.99 | 226.99 |
| 1,875 | 226.99 | 226.99 | 226.99 | 226.99 | 226.99 |
| 1,880 | 226.99 | 226.99 | 226.99 | 226.99 | 226.99 |
| 1,885 | 226.99 | 226.99 | 226.99 | 226.99 | 226.99 |
| 1,890 | 226.99 | 226.98 | 226.98 | 226.98 | 226.98 |
| 1,895 | 226.98 | 226.98 | 226.98 | 226.98 | 226.98 |
| 1,900 | 226.98 | 226.98 | 226.98 | 226.98 | 226.98 |
| 1,905 | 226.98 | 226.98 | 226.98 | 226.98 | 226.98 |
| 1,910 | 226.97 | 226.97 | 226.97 | 226.97 | 226.97 |
| 1,915 | 226.97 | 226.97 | 226.97 | 226.97 | 226.97 |
| 1,920 | 226.97 | 226.97 | 226.97 | 226.97 | 226.97 |
| 1,925 | 226.97 | 226.97 | 226.97 | 226.97 | 226.97 |
| 1,930 | 226.96 | 226.96 | 226.96 | 226.96 | 226.96 |
| 1,935 | 226.96 | 226.96 | 226.96 | 226.96 | 226.96 |
| 1,940 | 226.96 | 226.96 | 226.96 | 226.96 | 226.96 |
| 1,945 | 226.96 | 226.96 | 226.96 | 226.96 | 226.95 |
| 1,950 | 226.95 | 226.95 | 226.95 | 226.95 | 226.95 |
| 1,955 | 226.95 | 226.95 | 226.95 | 226.95 | 226.95 |
| 1,960 | 226.95 | 226.95 | 226.95 | 226.95 | 226.95 |
| 1,965 | 226.95 | 226.95 | 226.95 | 226.95 | 226.94 |
| 1,970 | 226.94 | 226.94 | 226.94 | 226.94 | 226.94 |
| 1,975 | 226.94 | 226.94 | 226.94 | 226.94 | 226.94 |
| 1,980 | 226.94 | 226.94 | 226.94 | 226.94 | 226.94 |
| 1,985 | 226.94 | 226.94 | 226.94 | 226.93 | 226.93 |
| 1,990 | 226.93 | 226.93 | 226.93 | 226.93 | 226.93 |
| 1,995 | 226.93 | 226.93 | 226.93 | 226.93 | 226.93 |
| 2,000 | 226.93 | (N/A) | (N/A) | (N/A) | (N/A) |

# Basin 3F Drawdown

Subsection: Outlet Input Data
Label: Outlet#1 w Underdrain
Scenario: Drawdown

Return Event: 100 years
Storm Event:

| Requested Pond Water Surface Elevations | |
|---|---|
| Minimum (Headwater) | 223.50 ft |
| Increment (Headwater) | 0.10 ft |
| Maximum (Headwater) | 229.50 ft |

## Outlet Connectivity

| Structure Type | Outlet ID | Direction | Outfall | E1 (ft) | E2 (ft) |
|---|---|---|---|---|---|
| Orifice-Circular | Orifice - LF | Forward | TW | 227.25 | 229.50 |
| Orifice-Circular | Orifice - 3 | Forward | TW | 227.90 | 229.50 |
| Inlet Box | Riser - 1 | Forward | TW | 228.50 | 229.50 |
| Orifice-Circular | Orifice - 2 | Forward | TW | 223.75 | 229.50 |
| Tailwater Settings | Tailwater | | | (N/A) | (N/A) |

# Basin 3F Drawdown

Subsection: Outlet Input Data
Label: Outlet#1 w Underdrain
Scenario: Drawdown

Return Event: 100 years
Storm Event:

| Structure ID: Orifice - LF<br>Structure Type: Orifice-Circular | |
|---|---|
| Number of Openings | 1 |
| Elevation | 227.25 ft |
| Orifice Diameter | 1.0 in |
| Orifice Coefficient | 0.600 |

| Structure ID: Riser - 1<br>Structure Type: Inlet Box | |
|---|---|
| Number of Openings | 1 |
| Elevation | 228.50 ft |
| Orifice Area | 4.7 ft² |
| Orifice Coefficient | 0.600 |
| Weir Length | 9.20 ft |
| Weir Coefficient | 3.00 (ft^0.5)/s |
| K Reverse | 1.000 |
| Manning's n | 0.000 |
| Kev, Charged Riser | 0.000 |
| Weir Submergence | False |
| Orifice H to crest | True |

| Structure ID: Orifice - 2<br>Structure Type: Orifice-Circular | |
|---|---|
| Number of Openings | 1 |
| Elevation | 223.75 ft |
| Orifice Diameter | 0.6 in |
| Orifice Coefficient | 0.600 |

| Structure ID: Orifice - 3<br>Structure Type: Orifice-Circular | |
|---|---|
| Number of Openings | 1 |
| Elevation | 227.90 ft |
| Orifice Diameter | 1.5 in |
| Orifice Coefficient | 0.600 |

| Structure ID: TW<br>Structure Type: TW Setup, DS Channel | |
|---|---|
| Tailwater Type | Free Outfall |

| Convergence Tolerances | |
|---|---|
| Maximum Iterations | 80 |

# Basin 3F Drawdown

Subsection: Outlet Input Data
Label: Outlet#1 w Underdrain
Scenario: Drawdown

Return Event: 100 years
Storm Event:

| Convergence Tolerances | |
|---|---|
| Tailwater Tolerance (Minimum) | 0.01 ft |
| Tailwater Tolerance (Maximum) | 0.10 ft |
| Headwater Tolerance (Minimum) | 0.01 ft |
| Headwater Tolerance (Maximum) | 0.10 ft |
| Flow Tolerance (Minimum) | 0.001 ft³/s |
| Flow Tolerance (Maximum) | 10.000 ft³/s |

# Basin 3F Drawdown

Subsection: Elevation-Volume-Flow Table (Pond)
Label: 1
Scenario: Drawdown

Return Event: 100 years
Storm Event:

| Infiltration | |
|---|---|
| Infiltration Method (Computed) | No Infiltration |

| Initial Conditions | |
|---|---|
| Elevation (Water Surface, Initial) | 229.50 ft |
| Volume (Initial) | 0.197 ac-ft |
| Flow (Initial Outlet) | 22.76 ft³/s |
| Flow (Initial Infiltration) | 0.00 ft³/s |
| Flow (Initial, Total) | 22.76 ft³/s |
| Time Increment | 1 min |

| Elevation (ft) | Outflow (ft³/s) | Storage (ac-ft) | Area (ft²) | Infiltration (ft³/s) | Flow (Total) (ft³/s) | 2S/t + O (ft³/s) |
|---|---|---|---|---|---|---|
| 223.50 | 0.00 | 0.000 | 10.000 | 0.00 | 0.00 | 0.00 |
| 223.60 | 0.00 | 0.000 | 10.000 | 0.00 | 0.00 | 0.03 |
| 223.70 | 0.00 | 0.000 | 10.000 | 0.00 | 0.00 | 0.07 |
| 223.75 | 0.00 | 0.000 | 10.000 | 0.00 | 0.00 | 0.08 |
| 223.80 | 0.00 | 0.000 | 10.000 | 0.00 | 0.00 | 0.10 |
| 223.90 | 0.00 | 0.000 | 10.000 | 0.00 | 0.00 | 0.14 |
| 224.00 | 0.00 | 0.000 | 10.000 | 0.00 | 0.00 | 0.17 |
| 224.10 | 0.01 | 0.000 | 10.000 | 0.00 | 0.01 | 0.21 |
| 224.20 | 0.01 | 0.000 | 10.000 | 0.00 | 0.01 | 0.24 |
| 224.30 | 0.01 | 0.000 | 10.000 | 0.00 | 0.01 | 0.27 |
| 224.40 | 0.01 | 0.000 | 10.000 | 0.00 | 0.01 | 0.31 |
| 224.50 | 0.01 | 0.000 | 10.000 | 0.00 | 0.01 | 0.34 |
| 224.60 | 0.01 | 0.000 | 10.000 | 0.00 | 0.01 | 0.38 |
| 224.70 | 0.01 | 0.000 | 10.000 | 0.00 | 0.01 | 0.41 |
| 224.80 | 0.01 | 0.000 | 10.000 | 0.00 | 0.01 | 0.44 |
| 224.90 | 0.01 | 0.000 | 10.000 | 0.00 | 0.01 | 0.48 |
| 225.00 | 0.01 | 0.000 | 10.000 | 0.00 | 0.01 | 0.51 |
| 225.10 | 0.01 | 0.000 | 10.000 | 0.00 | 0.01 | 0.54 |
| 225.20 | 0.01 | 0.000 | 10.000 | 0.00 | 0.01 | 0.58 |
| 225.30 | 0.01 | 0.000 | 10.000 | 0.00 | 0.01 | 0.61 |
| 225.40 | 0.01 | 0.000 | 10.000 | 0.00 | 0.01 | 0.65 |
| 225.50 | 0.01 | 0.000 | 10.000 | 0.00 | 0.01 | 0.68 |
| 225.60 | 0.01 | 0.000 | 10.000 | 0.00 | 0.01 | 0.71 |
| 225.70 | 0.01 | 0.001 | 10.000 | 0.00 | 0.01 | 0.75 |
| 225.80 | 0.01 | 0.001 | 10.000 | 0.00 | 0.01 | 0.78 |
| 225.90 | 0.01 | 0.001 | 10.000 | 0.00 | 0.01 | 0.81 |
| 226.00 | 0.01 | 0.001 | 10.000 | 0.00 | 0.01 | 0.85 |
| 226.10 | 0.01 | 0.001 | 10.000 | 0.00 | 0.01 | 0.88 |
| 226.20 | 0.01 | 0.001 | 10.000 | 0.00 | 0.01 | 0.91 |

# Basin 3F Drawdown

Subsection: Elevation-Volume-Flow Table (Pond) Return Event: 100 years
Label: 1 Storm Event:
Scenario: Drawdown

| Elevation (ft) | Outflow (ft³/s) | Storage (ac-ft) | Area (ft²) | Infiltration (ft³/s) | Flow (Total) (ft³/s) | 2S/t + O (ft³/s) |
|---|---|---|---|---|---|---|
| 226.30 | 0.02 | 0.001 | 10.000 | 0.00 | 0.02 | 0.95 |
| 226.40 | 0.02 | 0.001 | 10.000 | 0.00 | 0.02 | 0.98 |
| 226.50 | 0.02 | 0.001 | 1,619.000 | 0.00 | 0.02 | 1.21 |
| 226.60 | 0.02 | 0.005 | 1,693.269 | 0.00 | 0.02 | 6.73 |
| 226.70 | 0.02 | 0.009 | 1,769.204 | 0.00 | 0.02 | 12.50 |
| 226.80 | 0.02 | 0.013 | 1,846.804 | 0.00 | 0.02 | 18.52 |
| 226.90 | 0.02 | 0.017 | 1,926.069 | 0.00 | 0.02 | 24.81 |
| 227.00 | 0.02 | 0.022 | 2,007.000 | 0.00 | 0.02 | 31.37 |
| 227.10 | 0.02 | 0.026 | 2,082.609 | 0.00 | 0.02 | 38.18 |
| 227.20 | 0.02 | 0.031 | 2,159.616 | 0.00 | 0.02 | 45.25 |
| 227.25 | 0.02 | 0.034 | 2,198.644 | 0.00 | 0.02 | 48.89 |
| 227.30 | 0.02 | 0.036 | 2,238.021 | 0.00 | 0.02 | 52.59 |
| 227.40 | 0.03 | 0.041 | 2,317.824 | 0.00 | 0.03 | 60.18 |
| 227.50 | 0.03 | 0.047 | 2,399.025 | 0.00 | 0.03 | 68.05 |
| 227.60 | 0.03 | 0.052 | 2,481.624 | 0.00 | 0.03 | 76.19 |
| 227.70 | 0.04 | 0.058 | 2,565.621 | 0.00 | 0.04 | 84.60 |
| 227.80 | 0.04 | 0.064 | 2,651.016 | 0.00 | 0.04 | 93.30 |
| 227.90 | 0.04 | 0.070 | 2,737.809 | 0.00 | 0.04 | 102.28 |
| 228.00 | 0.05 | 0.077 | 2,826.000 | 0.00 | 0.05 | 111.56 |
| 228.10 | 0.07 | 0.083 | 2,908.198 | 0.00 | 0.07 | 121.13 |
| 228.20 | 0.07 | 0.090 | 2,991.573 | 0.00 | 0.07 | 130.98 |
| 228.30 | 0.08 | 0.097 | 3,076.128 | 0.00 | 0.08 | 141.09 |
| 228.40 | 0.09 | 0.104 | 3,161.860 | 0.00 | 0.09 | 151.50 |
| 228.50 | 0.09 | 0.112 | 3,248.771 | 0.00 | 0.09 | 162.19 |
| 228.60 | 0.97 | 0.119 | 3,336.860 | 0.00 | 0.97 | 174.04 |
| 228.70 | 2.57 | 0.127 | 3,426.128 | 0.00 | 2.57 | 186.91 |
| 228.80 | 4.64 | 0.135 | 3,516.573 | 0.00 | 4.64 | 200.55 |
| 228.90 | 7.09 | 0.143 | 3,608.198 | 0.00 | 7.09 | 214.88 |
| 229.00 | 9.87 | 0.151 | 3,701.000 | 0.00 | 9.87 | 229.84 |
| 229.10 | 12.95 | 0.160 | 3,790.654 | 0.00 | 12.95 | 245.40 |
| 229.20 | 16.29 | 0.169 | 3,881.381 | 0.00 | 16.29 | 261.53 |
| 229.30 | 19.88 | 0.178 | 3,973.181 | 0.00 | 19.88 | 278.21 |
| 229.40 | 21.59 | 0.187 | 4,066.054 | 0.00 | 21.59 | 293.32 |
| 229.50 | 22.76 | 0.197 | 4,160.000 | 0.00 | 22.76 | 308.20 |

# Basin 3F Drawdown

## Index

1

1 (Elevation-Volume-Flow Table (Pond))...

1 (Elevation-Volume-Flow Table (Pond), 100 years (Drawdown))...14, 15

1 (OUT) (Time vs. Elevation)...

1 (OUT) (Time vs. Elevation, 100 years (Drawdown))...1, 2, 3, 4, 5, 6, 7, 8, 9, 10

O

Outlet#1 w Underdrain (Outlet Input Data)...

Outlet#1 w Underdrain (Outlet Input Data, 100 years (Drawdown))...11, 12, 13

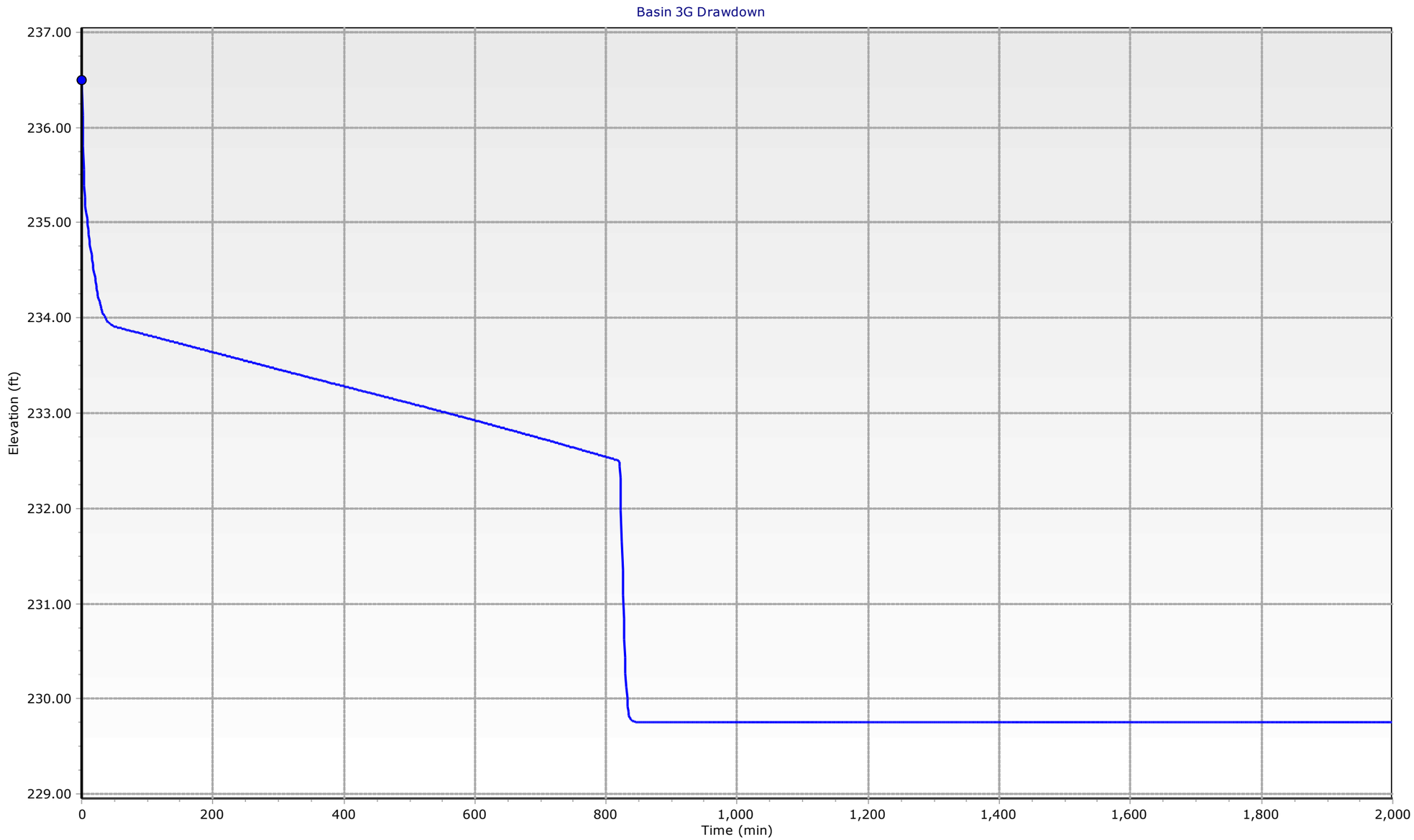
Basin 3G Drawdown
237.00
236.00
235.00
234.00
233.00
232.00
231.00
230.00
229.00
Elevation (ft)
0
200
400
600
800
1,000
1,200
1,400
1,600
1,800
2,000
Time (min)
1 - Drawdown - Elevation

# Table of Contents


| | | |
|---|---|---|
| 1 (OUT) | Time vs. Elevation | 1 |
| Outlet#1 with Underdrain | Outlet Input Data | 11 |
| 1 | Elevation-Volume-Flow Table (Pond) | 14 |

# Basin 3G Drawdown

Subsection: Time vs. Elevation
Label: 1 (OUT)
Scenario: Drawdown

Return Event: 100 years
Storm Event:

**Time vs. Elevation (ft)**

**Output Time increment = 1 min**
**Time on left represents time for first value in each row.**

| Time (min) | Elevation (ft) | Elevation (ft) | Elevation (ft) | Elevation (ft) | Elevation (ft) |
|---|---|---|---|---|---|
| 0 | 236.50 | 236.13 | 235.81 | 235.55 | 235.38 |
| 5 | 235.26 | 235.17 | 235.10 | 235.04 | 234.98 |
| 10 | 234.93 | 234.87 | 234.82 | 234.76 | 234.71 |
| 15 | 234.66 | 234.61 | 234.56 | 234.51 | 234.47 |
| 20 | 234.42 | 234.38 | 234.34 | 234.30 | 234.26 |
| 25 | 234.23 | 234.20 | 234.17 | 234.14 | 234.12 |
| 30 | 234.09 | 234.07 | 234.06 | 234.04 | 234.02 |
| 35 | 234.01 | 234.00 | 233.99 | 233.98 | 233.97 |
| 40 | 233.96 | 233.95 | 233.94 | 233.94 | 233.93 |
| 45 | 233.93 | 233.92 | 233.92 | 233.92 | 233.91 |
| 50 | 233.91 | 233.91 | 233.90 | 233.90 | 233.90 |
| 55 | 233.90 | 233.90 | 233.90 | 233.89 | 233.89 |
| 60 | 233.89 | 233.89 | 233.89 | 233.88 | 233.88 |
| 65 | 233.88 | 233.88 | 233.88 | 233.88 | 233.87 |
| 70 | 233.87 | 233.87 | 233.87 | 233.87 | 233.87 |
| 75 | 233.86 | 233.86 | 233.86 | 233.86 | 233.86 |
| 80 | 233.85 | 233.85 | 233.85 | 233.85 | 233.85 |
| 85 | 233.85 | 233.84 | 233.84 | 233.84 | 233.84 |
| 90 | 233.84 | 233.83 | 233.83 | 233.83 | 233.83 |
| 95 | 233.83 | 233.83 | 233.82 | 233.82 | 233.82 |
| 100 | 233.82 | 233.82 | 233.82 | 233.81 | 233.81 |
| 105 | 233.81 | 233.81 | 233.81 | 233.80 | 233.80 |
| 110 | 233.80 | 233.80 | 233.80 | 233.80 | 233.79 |
| 115 | 233.79 | 233.79 | 233.79 | 233.79 | 233.79 |
| 120 | 233.78 | 233.78 | 233.78 | 233.78 | 233.78 |
| 125 | 233.77 | 233.77 | 233.77 | 233.77 | 233.77 |
| 130 | 233.77 | 233.76 | 233.76 | 233.76 | 233.76 |
| 135 | 233.76 | 233.75 | 233.75 | 233.75 | 233.75 |
| 140 | 233.75 | 233.75 | 233.74 | 233.74 | 233.74 |
| 145 | 233.74 | 233.74 | 233.73 | 233.73 | 233.73 |
| 150 | 233.73 | 233.73 | 233.73 | 233.72 | 233.72 |
| 155 | 233.72 | 233.72 | 233.72 | 233.72 | 233.71 |
| 160 | 233.71 | 233.71 | 233.71 | 233.71 | 233.70 |
| 165 | 233.70 | 233.70 | 233.70 | 233.70 | 233.70 |
| 170 | 233.69 | 233.69 | 233.69 | 233.69 | 233.69 |
| 175 | 233.68 | 233.68 | 233.68 | 233.68 | 233.68 |
| 180 | 233.68 | 233.67 | 233.67 | 233.67 | 233.67 |
| 185 | 233.67 | 233.67 | 233.66 | 233.66 | 233.66 |
| 190 | 233.66 | 233.66 | 233.65 | 233.65 | 233.65 |
| 195 | 233.65 | 233.65 | 233.65 | 233.64 | 233.64 |

# Basin 3G Drawdown

Subsection: Time vs. Elevation
Label: 1 (OUT)
Scenario: Drawdown

Return Event: 100 years
Storm Event:

## Time vs. Elevation (ft)

**Output Time increment = 1 min**
**Time on left represents time for first value in each row.**

| Time (min) | Elevation (ft) | Elevation (ft) | Elevation (ft) | Elevation (ft) | Elevation (ft) |
|---|---|---|---|---|---|
| 200 | 233.64 | 233.64 | 233.64 | 233.63 | 233.63 |
| 205 | 233.63 | 233.63 | 233.63 | 233.63 | 233.62 |
| 210 | 233.62 | 233.62 | 233.62 | 233.62 | 233.61 |
| 215 | 233.61 | 233.61 | 233.61 | 233.61 | 233.61 |
| 220 | 233.60 | 233.60 | 233.60 | 233.60 | 233.60 |
| 225 | 233.60 | 233.59 | 233.59 | 233.59 | 233.59 |
| 230 | 233.59 | 233.58 | 233.58 | 233.58 | 233.58 |
| 235 | 233.58 | 233.58 | 233.57 | 233.57 | 233.57 |
| 240 | 233.57 | 233.57 | 233.56 | 233.56 | 233.56 |
| 245 | 233.56 | 233.56 | 233.56 | 233.55 | 233.55 |
| 250 | 233.55 | 233.55 | 233.55 | 233.54 | 233.54 |
| 255 | 233.54 | 233.54 | 233.54 | 233.54 | 233.53 |
| 260 | 233.53 | 233.53 | 233.53 | 233.53 | 233.52 |
| 265 | 233.52 | 233.52 | 233.52 | 233.52 | 233.52 |
| 270 | 233.51 | 233.51 | 233.51 | 233.51 | 233.51 |
| 275 | 233.50 | 233.50 | 233.50 | 233.50 | 233.50 |
| 280 | 233.50 | 233.49 | 233.49 | 233.49 | 233.49 |
| 285 | 233.49 | 233.48 | 233.48 | 233.48 | 233.48 |
| 290 | 233.48 | 233.48 | 233.47 | 233.47 | 233.47 |
| 295 | 233.47 | 233.47 | 233.46 | 233.46 | 233.46 |
| 300 | 233.46 | 233.46 | 233.46 | 233.45 | 233.45 |
| 305 | 233.45 | 233.45 | 233.45 | 233.45 | 233.44 |
| 310 | 233.44 | 233.44 | 233.44 | 233.44 | 233.43 |
| 315 | 233.43 | 233.43 | 233.43 | 233.43 | 233.43 |
| 320 | 233.42 | 233.42 | 233.42 | 233.42 | 233.42 |
| 325 | 233.41 | 233.41 | 233.41 | 233.41 | 233.41 |
| 330 | 233.41 | 233.40 | 233.40 | 233.40 | 233.40 |
| 335 | 233.40 | 233.39 | 233.39 | 233.39 | 233.39 |
| 340 | 233.39 | 233.39 | 233.38 | 233.38 | 233.38 |
| 345 | 233.38 | 233.38 | 233.37 | 233.37 | 233.37 |
| 350 | 233.37 | 233.37 | 233.37 | 233.36 | 233.36 |
| 355 | 233.36 | 233.36 | 233.36 | 233.36 | 233.35 |
| 360 | 233.35 | 233.35 | 233.35 | 233.35 | 233.34 |
| 365 | 233.34 | 233.34 | 233.34 | 233.34 | 233.34 |
| 370 | 233.33 | 233.33 | 233.33 | 233.33 | 233.33 |
| 375 | 233.33 | 233.32 | 233.32 | 233.32 | 233.32 |
| 380 | 233.32 | 233.31 | 233.31 | 233.31 | 233.31 |
| 385 | 233.31 | 233.31 | 233.30 | 233.30 | 233.30 |
| 390 | 233.30 | 233.30 | 233.30 | 233.29 | 233.29 |
| 395 | 233.29 | 233.29 | 233.29 | 233.28 | 233.28 |
| 400 | 233.28 | 233.28 | 233.28 | 233.28 | 233.27 |

# Basin 3G Drawdown

Subsection: Time vs. Elevation
Label: 1 (OUT)
Scenario: Drawdown

Return Event: 100 years
Storm Event:

**Time vs. Elevation (ft)**

**Output Time increment = 1 min**
**Time on left represents time for first value in each row.**

| Time (min) | Elevation (ft) | Elevation (ft) | Elevation (ft) | Elevation (ft) | Elevation (ft) |
|---|---|---|---|---|---|
| 405 | 233.27 | 233.27 | 233.27 | 233.27 | 233.27 |
| 410 | 233.26 | 233.26 | 233.26 | 233.26 | 233.26 |
| 415 | 233.26 | 233.25 | 233.25 | 233.25 | 233.25 |
| 420 | 233.25 | 233.24 | 233.24 | 233.24 | 233.24 |
| 425 | 233.24 | 233.24 | 233.23 | 233.23 | 233.23 |
| 430 | 233.23 | 233.23 | 233.23 | 233.22 | 233.22 |
| 435 | 233.22 | 233.22 | 233.22 | 233.22 | 233.21 |
| 440 | 233.21 | 233.21 | 233.21 | 233.21 | 233.20 |
| 445 | 233.20 | 233.20 | 233.20 | 233.20 | 233.20 |
| 450 | 233.19 | 233.19 | 233.19 | 233.19 | 233.19 |
| 455 | 233.19 | 233.18 | 233.18 | 233.18 | 233.18 |
| 460 | 233.18 | 233.17 | 233.17 | 233.17 | 233.17 |
| 465 | 233.17 | 233.17 | 233.16 | 233.16 | 233.16 |
| 470 | 233.16 | 233.16 | 233.15 | 233.15 | 233.15 |
| 475 | 233.15 | 233.15 | 233.15 | 233.14 | 233.14 |
| 480 | 233.14 | 233.14 | 233.14 | 233.14 | 233.13 |
| 485 | 233.13 | 233.13 | 233.13 | 233.13 | 233.12 |
| 490 | 233.12 | 233.12 | 233.12 | 233.12 | 233.12 |
| 495 | 233.11 | 233.11 | 233.11 | 233.11 | 233.11 |
| 500 | 233.11 | 233.10 | 233.10 | 233.10 | 233.10 |
| 505 | 233.10 | 233.09 | 233.09 | 233.09 | 233.09 |
| 510 | 233.09 | 233.09 | 233.08 | 233.08 | 233.08 |
| 515 | 233.08 | 233.08 | 233.07 | 233.07 | 233.07 |
| 520 | 233.07 | 233.07 | 233.07 | 233.06 | 233.06 |
| 525 | 233.06 | 233.06 | 233.06 | 233.05 | 233.05 |
| 530 | 233.05 | 233.05 | 233.05 | 233.05 | 233.04 |
| 535 | 233.04 | 233.04 | 233.04 | 233.04 | 233.04 |
| 540 | 233.03 | 233.03 | 233.03 | 233.03 | 233.03 |
| 545 | 233.02 | 233.02 | 233.02 | 233.02 | 233.02 |
| 550 | 233.02 | 233.01 | 233.01 | 233.01 | 233.01 |
| 555 | 233.01 | 233.00 | 233.00 | 233.00 | 233.00 |
| 560 | 233.00 | 233.00 | 232.99 | 232.99 | 232.99 |
| 565 | 232.99 | 232.99 | 232.98 | 232.98 | 232.98 |
| 570 | 232.98 | 232.98 | 232.97 | 232.97 | 232.97 |
| 575 | 232.97 | 232.97 | 232.97 | 232.96 | 232.96 |
| 580 | 232.96 | 232.96 | 232.96 | 232.95 | 232.95 |
| 585 | 232.95 | 232.95 | 232.95 | 232.95 | 232.94 |
| 590 | 232.94 | 232.94 | 232.94 | 232.94 | 232.93 |
| 595 | 232.93 | 232.93 | 232.93 | 232.93 | 232.93 |
| 600 | 232.92 | 232.92 | 232.92 | 232.92 | 232.92 |
| 605 | 232.91 | 232.91 | 232.91 | 232.91 | 232.91 |

# Basin 3G Drawdown

Subsection: Time vs. Elevation
Label: 1 (OUT)
Scenario: Drawdown

Return Event: 100 years
Storm Event:

**Time vs. Elevation (ft)**

**Output Time increment = 1 min**
**Time on left represents time for first value in each row.**

| Time (min) | Elevation (ft) | Elevation (ft) | Elevation (ft) | Elevation (ft) | Elevation (ft) |
|---|---|---|---|---|---|
| 610 | 232.91 | 232.90 | 232.90 | 232.90 | 232.90 |
| 615 | 232.90 | 232.89 | 232.89 | 232.89 | 232.89 |
| 620 | 232.89 | 232.88 | 232.88 | 232.88 | 232.88 |
| 625 | 232.88 | 232.88 | 232.87 | 232.87 | 232.87 |
| 630 | 232.87 | 232.87 | 232.86 | 232.86 | 232.86 |
| 635 | 232.86 | 232.86 | 232.85 | 232.85 | 232.85 |
| 640 | 232.85 | 232.85 | 232.85 | 232.84 | 232.84 |
| 645 | 232.84 | 232.84 | 232.84 | 232.83 | 232.83 |
| 650 | 232.83 | 232.83 | 232.83 | 232.82 | 232.82 |
| 655 | 232.82 | 232.82 | 232.82 | 232.82 | 232.81 |
| 660 | 232.81 | 232.81 | 232.81 | 232.81 | 232.80 |
| 665 | 232.80 | 232.80 | 232.80 | 232.80 | 232.79 |
| 670 | 232.79 | 232.79 | 232.79 | 232.79 | 232.78 |
| 675 | 232.78 | 232.78 | 232.78 | 232.78 | 232.78 |
| 680 | 232.77 | 232.77 | 232.77 | 232.77 | 232.77 |
| 685 | 232.76 | 232.76 | 232.76 | 232.76 | 232.76 |
| 690 | 232.75 | 232.75 | 232.75 | 232.75 | 232.75 |
| 695 | 232.74 | 232.74 | 232.74 | 232.74 | 232.74 |
| 700 | 232.73 | 232.73 | 232.73 | 232.73 | 232.73 |
| 705 | 232.73 | 232.72 | 232.72 | 232.72 | 232.72 |
| 710 | 232.72 | 232.71 | 232.71 | 232.71 | 232.71 |
| 715 | 232.71 | 232.70 | 232.70 | 232.70 | 232.70 |
| 720 | 232.70 | 232.69 | 232.69 | 232.69 | 232.69 |
| 725 | 232.69 | 232.68 | 232.68 | 232.68 | 232.68 |
| 730 | 232.68 | 232.68 | 232.67 | 232.67 | 232.67 |
| 735 | 232.67 | 232.67 | 232.66 | 232.66 | 232.66 |
| 740 | 232.66 | 232.66 | 232.65 | 232.65 | 232.65 |
| 745 | 232.65 | 232.65 | 232.64 | 232.64 | 232.64 |
| 750 | 232.64 | 232.64 | 232.63 | 232.63 | 232.63 |
| 755 | 232.63 | 232.63 | 232.62 | 232.62 | 232.62 |
| 760 | 232.62 | 232.62 | 232.61 | 232.61 | 232.61 |
| 765 | 232.61 | 232.61 | 232.60 | 232.60 | 232.60 |
| 770 | 232.60 | 232.60 | 232.60 | 232.59 | 232.59 |
| 775 | 232.59 | 232.59 | 232.58 | 232.58 | 232.58 |
| 780 | 232.58 | 232.58 | 232.57 | 232.57 | 232.57 |
| 785 | 232.57 | 232.57 | 232.56 | 232.56 | 232.56 |
| 790 | 232.56 | 232.56 | 232.55 | 232.55 | 232.55 |
| 795 | 232.55 | 232.55 | 232.55 | 232.54 | 232.54 |
| 800 | 232.54 | 232.54 | 232.54 | 232.53 | 232.53 |
| 805 | 232.53 | 232.53 | 232.53 | 232.52 | 232.52 |
| 810 | 232.52 | 232.52 | 232.52 | 232.51 | 232.51 |

# Basin 3G Drawdown

Subsection: Time vs. Elevation
Label: 1 (OUT)
Scenario: Drawdown

Return Event: 100 years
Storm Event:

**Time vs. Elevation (ft)**

**Output Time increment = 1 min**
**Time on left represents time for first value in each row.**

| Time (min) | Elevation (ft) | Elevation (ft) | Elevation (ft) | Elevation (ft) | Elevation (ft) |
|---|---|---|---|---|---|
| 815 | 232.51 | 232.51 | 232.51 | 232.50 | 232.50 |
| 820 | 232.49 | 232.44 | 232.32 | 231.97 | 231.65 |
| 825 | 231.35 | 231.08 | 230.84 | 230.62 | 230.43 |
| 830 | 230.26 | 230.12 | 230.01 | 229.92 | 229.86 |
| 835 | 229.82 | 229.80 | 229.79 | 229.78 | 229.78 |
| 840 | 229.77 | 229.77 | 229.76 | 229.76 | 229.76 |
| 845 | 229.76 | 229.75 | 229.75 | 229.75 | 229.75 |
| 850 | 229.75 | 229.75 | 229.75 | 229.75 | 229.75 |
| 855 | 229.75 | 229.75 | 229.75 | 229.75 | 229.75 |
| 860 | 229.75 | 229.75 | 229.75 | 229.75 | 229.75 |
| 865 | 229.75 | 229.75 | 229.75 | 229.75 | 229.75 |
| 870 | 229.75 | 229.75 | 229.75 | 229.75 | 229.75 |
| 875 | 229.75 | 229.75 | 229.75 | 229.75 | 229.75 |
| 880 | 229.75 | 229.75 | 229.75 | 229.75 | 229.75 |
| 885 | 229.75 | 229.75 | 229.75 | 229.75 | 229.75 |
| 890 | 229.75 | 229.75 | 229.75 | 229.75 | 229.75 |
| 895 | 229.75 | 229.75 | 229.75 | 229.75 | 229.75 |
| 900 | 229.75 | 229.75 | 229.75 | 229.75 | 229.75 |
| 905 | 229.75 | 229.75 | 229.75 | 229.75 | 229.75 |
| 910 | 229.75 | 229.75 | 229.75 | 229.75 | 229.75 |
| 915 | 229.75 | 229.75 | 229.75 | 229.75 | 229.75 |
| 920 | 229.75 | 229.75 | 229.75 | 229.75 | 229.75 |
| 925 | 229.75 | 229.75 | 229.75 | 229.75 | 229.75 |
| 930 | 229.75 | 229.75 | 229.75 | 229.75 | 229.75 |
| 935 | 229.75 | 229.75 | 229.75 | 229.75 | 229.75 |
| 940 | 229.75 | 229.75 | 229.75 | 229.75 | 229.75 |
| 945 | 229.75 | 229.75 | 229.75 | 229.75 | 229.75 |
| 950 | 229.75 | 229.75 | 229.75 | 229.75 | 229.75 |
| 955 | 229.75 | 229.75 | 229.75 | 229.75 | 229.75 |
| 960 | 229.75 | 229.75 | 229.75 | 229.75 | 229.75 |
| 965 | 229.75 | 229.75 | 229.75 | 229.75 | 229.75 |
| 970 | 229.75 | 229.75 | 229.75 | 229.75 | 229.75 |
| 975 | 229.75 | 229.75 | 229.75 | 229.75 | 229.75 |
| 980 | 229.75 | 229.75 | 229.75 | 229.75 | 229.75 |
| 985 | 229.75 | 229.75 | 229.75 | 229.75 | 229.75 |
| 990 | 229.75 | 229.75 | 229.75 | 229.75 | 229.75 |
| 995 | 229.75 | 229.75 | 229.75 | 229.75 | 229.75 |
| 1,000 | 229.75 | 229.75 | 229.75 | 229.75 | 229.75 |
| 1,005 | 229.75 | 229.75 | 229.75 | 229.75 | 229.75 |
| 1,010 | 229.75 | 229.75 | 229.75 | 229.75 | 229.75 |
| 1,015 | 229.75 | 229.75 | 229.75 | 229.75 | 229.75 |

# Basin 3G Drawdown

Subsection: Time vs. Elevation
Label: 1 (OUT)
Scenario: Drawdown

Return Event: 100 years
Storm Event:

**Time vs. Elevation (ft)**

**Output Time increment = 1 min**
**Time on left represents time for first value in each row.**

| Time (min) | Elevation (ft) | Elevation (ft) | Elevation (ft) | Elevation (ft) | Elevation (ft) |
|---|---|---|---|---|---|
| 1,020 | 229.75 | 229.75 | 229.75 | 229.75 | 229.75 |
| 1,025 | 229.75 | 229.75 | 229.75 | 229.75 | 229.75 |
| 1,030 | 229.75 | 229.75 | 229.75 | 229.75 | 229.75 |
| 1,035 | 229.75 | 229.75 | 229.75 | 229.75 | 229.75 |
| 1,040 | 229.75 | 229.75 | 229.75 | 229.75 | 229.75 |
| 1,045 | 229.75 | 229.75 | 229.75 | 229.75 | 229.75 |
| 1,050 | 229.75 | 229.75 | 229.75 | 229.75 | 229.75 |
| 1,055 | 229.75 | 229.75 | 229.75 | 229.75 | 229.75 |
| 1,060 | 229.75 | 229.75 | 229.75 | 229.75 | 229.75 |
| 1,065 | 229.75 | 229.75 | 229.75 | 229.75 | 229.75 |
| 1,070 | 229.75 | 229.75 | 229.75 | 229.75 | 229.75 |
| 1,075 | 229.75 | 229.75 | 229.75 | 229.75 | 229.75 |
| 1,080 | 229.75 | 229.75 | 229.75 | 229.75 | 229.75 |
| 1,085 | 229.75 | 229.75 | 229.75 | 229.75 | 229.75 |
| 1,090 | 229.75 | 229.75 | 229.75 | 229.75 | 229.75 |
| 1,095 | 229.75 | 229.75 | 229.75 | 229.75 | 229.75 |
| 1,100 | 229.75 | 229.75 | 229.75 | 229.75 | 229.75 |
| 1,105 | 229.75 | 229.75 | 229.75 | 229.75 | 229.75 |
| 1,110 | 229.75 | 229.75 | 229.75 | 229.75 | 229.75 |
| 1,115 | 229.75 | 229.75 | 229.75 | 229.75 | 229.75 |
| 1,120 | 229.75 | 229.75 | 229.75 | 229.75 | 229.75 |
| 1,125 | 229.75 | 229.75 | 229.75 | 229.75 | 229.75 |
| 1,130 | 229.75 | 229.75 | 229.75 | 229.75 | 229.75 |
| 1,135 | 229.75 | 229.75 | 229.75 | 229.75 | 229.75 |
| 1,140 | 229.75 | 229.75 | 229.75 | 229.75 | 229.75 |
| 1,145 | 229.75 | 229.75 | 229.75 | 229.75 | 229.75 |
| 1,150 | 229.75 | 229.75 | 229.75 | 229.75 | 229.75 |
| 1,155 | 229.75 | 229.75 | 229.75 | 229.75 | 229.75 |
| 1,160 | 229.75 | 229.75 | 229.75 | 229.75 | 229.75 |
| 1,165 | 229.75 | 229.75 | 229.75 | 229.75 | 229.75 |
| 1,170 | 229.75 | 229.75 | 229.75 | 229.75 | 229.75 |
| 1,175 | 229.75 | 229.75 | 229.75 | 229.75 | 229.75 |
| 1,180 | 229.75 | 229.75 | 229.75 | 229.75 | 229.75 |
| 1,185 | 229.75 | 229.75 | 229.75 | 229.75 | 229.75 |
| 1,190 | 229.75 | 229.75 | 229.75 | 229.75 | 229.75 |
| 1,195 | 229.75 | 229.75 | 229.75 | 229.75 | 229.75 |
| 1,200 | 229.75 | 229.75 | 229.75 | 229.75 | 229.75 |
| 1,205 | 229.75 | 229.75 | 229.75 | 229.75 | 229.75 |
| 1,210 | 229.75 | 229.75 | 229.75 | 229.75 | 229.75 |
| 1,215 | 229.75 | 229.75 | 229.75 | 229.75 | 229.75 |
| 1,220 | 229.75 | 229.75 | 229.75 | 229.75 | 229.75 |

# Basin 3G Drawdown

Subsection: Time vs. Elevation
Label: 1 (OUT)
Scenario: Drawdown

Return Event: 100 years
Storm Event:

**Time vs. Elevation (ft)**

**Output Time increment = 1 min**
**Time on left represents time for first value in each row.**

| Time (min) | Elevation (ft) | Elevation (ft) | Elevation (ft) | Elevation (ft) | Elevation (ft) |
|---|---|---|---|---|---|
| 1,225 | 229.75 | 229.75 | 229.75 | 229.75 | 229.75 |
| 1,230 | 229.75 | 229.75 | 229.75 | 229.75 | 229.75 |
| 1,235 | 229.75 | 229.75 | 229.75 | 229.75 | 229.75 |
| 1,240 | 229.75 | 229.75 | 229.75 | 229.75 | 229.75 |
| 1,245 | 229.75 | 229.75 | 229.75 | 229.75 | 229.75 |
| 1,250 | 229.75 | 229.75 | 229.75 | 229.75 | 229.75 |
| 1,255 | 229.75 | 229.75 | 229.75 | 229.75 | 229.75 |
| 1,260 | 229.75 | 229.75 | 229.75 | 229.75 | 229.75 |
| 1,265 | 229.75 | 229.75 | 229.75 | 229.75 | 229.75 |
| 1,270 | 229.75 | 229.75 | 229.75 | 229.75 | 229.75 |
| 1,275 | 229.75 | 229.75 | 229.75 | 229.75 | 229.75 |
| 1,280 | 229.75 | 229.75 | 229.75 | 229.75 | 229.75 |
| 1,285 | 229.75 | 229.75 | 229.75 | 229.75 | 229.75 |
| 1,290 | 229.75 | 229.75 | 229.75 | 229.75 | 229.75 |
| 1,295 | 229.75 | 229.75 | 229.75 | 229.75 | 229.75 |
| 1,300 | 229.75 | 229.75 | 229.75 | 229.75 | 229.75 |
| 1,305 | 229.75 | 229.75 | 229.75 | 229.75 | 229.75 |
| 1,310 | 229.75 | 229.75 | 229.75 | 229.75 | 229.75 |
| 1,315 | 229.75 | 229.75 | 229.75 | 229.75 | 229.75 |
| 1,320 | 229.75 | 229.75 | 229.75 | 229.75 | 229.75 |
| 1,325 | 229.75 | 229.75 | 229.75 | 229.75 | 229.75 |
| 1,330 | 229.75 | 229.75 | 229.75 | 229.75 | 229.75 |
| 1,335 | 229.75 | 229.75 | 229.75 | 229.75 | 229.75 |
| 1,340 | 229.75 | 229.75 | 229.75 | 229.75 | 229.75 |
| 1,345 | 229.75 | 229.75 | 229.75 | 229.75 | 229.75 |
| 1,350 | 229.75 | 229.75 | 229.75 | 229.75 | 229.75 |
| 1,355 | 229.75 | 229.75 | 229.75 | 229.75 | 229.75 |
| 1,360 | 229.75 | 229.75 | 229.75 | 229.75 | 229.75 |
| 1,365 | 229.75 | 229.75 | 229.75 | 229.75 | 229.75 |
| 1,370 | 229.75 | 229.75 | 229.75 | 229.75 | 229.75 |
| 1,375 | 229.75 | 229.75 | 229.75 | 229.75 | 229.75 |
| 1,380 | 229.75 | 229.75 | 229.75 | 229.75 | 229.75 |
| 1,385 | 229.75 | 229.75 | 229.75 | 229.75 | 229.75 |
| 1,390 | 229.75 | 229.75 | 229.75 | 229.75 | 229.75 |
| 1,395 | 229.75 | 229.75 | 229.75 | 229.75 | 229.75 |
| 1,400 | 229.75 | 229.75 | 229.75 | 229.75 | 229.75 |
| 1,405 | 229.75 | 229.75 | 229.75 | 229.75 | 229.75 |
| 1,410 | 229.75 | 229.75 | 229.75 | 229.75 | 229.75 |
| 1,415 | 229.75 | 229.75 | 229.75 | 229.75 | 229.75 |
| 1,420 | 229.75 | 229.75 | 229.75 | 229.75 | 229.75 |
| 1,425 | 229.75 | 229.75 | 229.75 | 229.75 | 229.75 |

# Basin 3G Drawdown

Subsection: Time vs. Elevation
Label: 1 (OUT)
Scenario: Drawdown

Return Event: 100 years
Storm Event:

**Time vs. Elevation (ft)**

**Output Time increment = 1 min**
**Time on left represents time for first value in each row.**

| Time (min) | Elevation (ft) | Elevation (ft) | Elevation (ft) | Elevation (ft) | Elevation (ft) |
|---|---|---|---|---|---|
| 1,430 | 229.75 | 229.75 | 229.75 | 229.75 | 229.75 |
| 1,435 | 229.75 | 229.75 | 229.75 | 229.75 | 229.75 |
| 1,440 | 229.75 | 229.75 | 229.75 | 229.75 | 229.75 |
| 1,445 | 229.75 | 229.75 | 229.75 | 229.75 | 229.75 |
| 1,450 | 229.75 | 229.75 | 229.75 | 229.75 | 229.75 |
| 1,455 | 229.75 | 229.75 | 229.75 | 229.75 | 229.75 |
| 1,460 | 229.75 | 229.75 | 229.75 | 229.75 | 229.75 |
| 1,465 | 229.75 | 229.75 | 229.75 | 229.75 | 229.75 |
| 1,470 | 229.75 | 229.75 | 229.75 | 229.75 | 229.75 |
| 1,475 | 229.75 | 229.75 | 229.75 | 229.75 | 229.75 |
| 1,480 | 229.75 | 229.75 | 229.75 | 229.75 | 229.75 |
| 1,485 | 229.75 | 229.75 | 229.75 | 229.75 | 229.75 |
| 1,490 | 229.75 | 229.75 | 229.75 | 229.75 | 229.75 |
| 1,495 | 229.75 | 229.75 | 229.75 | 229.75 | 229.75 |
| 1,500 | 229.75 | 229.75 | 229.75 | 229.75 | 229.75 |
| 1,505 | 229.75 | 229.75 | 229.75 | 229.75 | 229.75 |
| 1,510 | 229.75 | 229.75 | 229.75 | 229.75 | 229.75 |
| 1,515 | 229.75 | 229.75 | 229.75 | 229.75 | 229.75 |
| 1,520 | 229.75 | 229.75 | 229.75 | 229.75 | 229.75 |
| 1,525 | 229.75 | 229.75 | 229.75 | 229.75 | 229.75 |
| 1,530 | 229.75 | 229.75 | 229.75 | 229.75 | 229.75 |
| 1,535 | 229.75 | 229.75 | 229.75 | 229.75 | 229.75 |
| 1,540 | 229.75 | 229.75 | 229.75 | 229.75 | 229.75 |
| 1,545 | 229.75 | 229.75 | 229.75 | 229.75 | 229.75 |
| 1,550 | 229.75 | 229.75 | 229.75 | 229.75 | 229.75 |
| 1,555 | 229.75 | 229.75 | 229.75 | 229.75 | 229.75 |
| 1,560 | 229.75 | 229.75 | 229.75 | 229.75 | 229.75 |
| 1,565 | 229.75 | 229.75 | 229.75 | 229.75 | 229.75 |
| 1,570 | 229.75 | 229.75 | 229.75 | 229.75 | 229.75 |
| 1,575 | 229.75 | 229.75 | 229.75 | 229.75 | 229.75 |
| 1,580 | 229.75 | 229.75 | 229.75 | 229.75 | 229.75 |
| 1,585 | 229.75 | 229.75 | 229.75 | 229.75 | 229.75 |
| 1,590 | 229.75 | 229.75 | 229.75 | 229.75 | 229.75 |
| 1,595 | 229.75 | 229.75 | 229.75 | 229.75 | 229.75 |
| 1,600 | 229.75 | 229.75 | 229.75 | 229.75 | 229.75 |
| 1,605 | 229.75 | 229.75 | 229.75 | 229.75 | 229.75 |
| 1,610 | 229.75 | 229.75 | 229.75 | 229.75 | 229.75 |
| 1,615 | 229.75 | 229.75 | 229.75 | 229.75 | 229.75 |
| 1,620 | 229.75 | 229.75 | 229.75 | 229.75 | 229.75 |
| 1,625 | 229.75 | 229.75 | 229.75 | 229.75 | 229.75 |
| 1,630 | 229.75 | 229.75 | 229.75 | 229.75 | 229.75 |

# Basin 3G Drawdown

Subsection: Time vs. Elevation
Label: 1 (OUT)
Scenario: Drawdown

Return Event: 100 years
Storm Event:

**Time vs. Elevation (ft)**

**Output Time increment = 1 min**
**Time on left represents time for first value in each row.**

| Time (min) | Elevation (ft) | Elevation (ft) | Elevation (ft) | Elevation (ft) | Elevation (ft) |
|---|---|---|---|---|---|
| 1,635 | 229.75 | 229.75 | 229.75 | 229.75 | 229.75 |
| 1,640 | 229.75 | 229.75 | 229.75 | 229.75 | 229.75 |
| 1,645 | 229.75 | 229.75 | 229.75 | 229.75 | 229.75 |
| 1,650 | 229.75 | 229.75 | 229.75 | 229.75 | 229.75 |
| 1,655 | 229.75 | 229.75 | 229.75 | 229.75 | 229.75 |
| 1,660 | 229.75 | 229.75 | 229.75 | 229.75 | 229.75 |
| 1,665 | 229.75 | 229.75 | 229.75 | 229.75 | 229.75 |
| 1,670 | 229.75 | 229.75 | 229.75 | 229.75 | 229.75 |
| 1,675 | 229.75 | 229.75 | 229.75 | 229.75 | 229.75 |
| 1,680 | 229.75 | 229.75 | 229.75 | 229.75 | 229.75 |
| 1,685 | 229.75 | 229.75 | 229.75 | 229.75 | 229.75 |
| 1,690 | 229.75 | 229.75 | 229.75 | 229.75 | 229.75 |
| 1,695 | 229.75 | 229.75 | 229.75 | 229.75 | 229.75 |
| 1,700 | 229.75 | 229.75 | 229.75 | 229.75 | 229.75 |
| 1,705 | 229.75 | 229.75 | 229.75 | 229.75 | 229.75 |
| 1,710 | 229.75 | 229.75 | 229.75 | 229.75 | 229.75 |
| 1,715 | 229.75 | 229.75 | 229.75 | 229.75 | 229.75 |
| 1,720 | 229.75 | 229.75 | 229.75 | 229.75 | 229.75 |
| 1,725 | 229.75 | 229.75 | 229.75 | 229.75 | 229.75 |
| 1,730 | 229.75 | 229.75 | 229.75 | 229.75 | 229.75 |
| 1,735 | 229.75 | 229.75 | 229.75 | 229.75 | 229.75 |
| 1,740 | 229.75 | 229.75 | 229.75 | 229.75 | 229.75 |
| 1,745 | 229.75 | 229.75 | 229.75 | 229.75 | 229.75 |
| 1,750 | 229.75 | 229.75 | 229.75 | 229.75 | 229.75 |
| 1,755 | 229.75 | 229.75 | 229.75 | 229.75 | 229.75 |
| 1,760 | 229.75 | 229.75 | 229.75 | 229.75 | 229.75 |
| 1,765 | 229.75 | 229.75 | 229.75 | 229.75 | 229.75 |
| 1,770 | 229.75 | 229.75 | 229.75 | 229.75 | 229.75 |
| 1,775 | 229.75 | 229.75 | 229.75 | 229.75 | 229.75 |
| 1,780 | 229.75 | 229.75 | 229.75 | 229.75 | 229.75 |
| 1,785 | 229.75 | 229.75 | 229.75 | 229.75 | 229.75 |
| 1,790 | 229.75 | 229.75 | 229.75 | 229.75 | 229.75 |
| 1,795 | 229.75 | 229.75 | 229.75 | 229.75 | 229.75 |
| 1,800 | 229.75 | 229.75 | 229.75 | 229.75 | 229.75 |
| 1,805 | 229.75 | 229.75 | 229.75 | 229.75 | 229.75 |
| 1,810 | 229.75 | 229.75 | 229.75 | 229.75 | 229.75 |
| 1,815 | 229.75 | 229.75 | 229.75 | 229.75 | 229.75 |
| 1,820 | 229.75 | 229.75 | 229.75 | 229.75 | 229.75 |
| 1,825 | 229.75 | 229.75 | 229.75 | 229.75 | 229.75 |
| 1,830 | 229.75 | 229.75 | 229.75 | 229.75 | 229.75 |
| 1,835 | 229.75 | 229.75 | 229.75 | 229.75 | 229.75 |

# Basin 3G Drawdown

Subsection: Time vs. Elevation
Label: 1 (OUT)
Scenario: Drawdown

Return Event: 100 years
Storm Event:

**Time vs. Elevation (ft)**

**Output Time increment = 1 min**
**Time on left represents time for first value in each row.**

| Time (min) | Elevation (ft) | Elevation (ft) | Elevation (ft) | Elevation (ft) | Elevation (ft) |
|---|---|---|---|---|---|
| 1,840 | 229.75 | 229.75 | 229.75 | 229.75 | 229.75 |
| 1,845 | 229.75 | 229.75 | 229.75 | 229.75 | 229.75 |
| 1,850 | 229.75 | 229.75 | 229.75 | 229.75 | 229.75 |
| 1,855 | 229.75 | 229.75 | 229.75 | 229.75 | 229.75 |
| 1,860 | 229.75 | 229.75 | 229.75 | 229.75 | 229.75 |
| 1,865 | 229.75 | 229.75 | 229.75 | 229.75 | 229.75 |
| 1,870 | 229.75 | 229.75 | 229.75 | 229.75 | 229.75 |
| 1,875 | 229.75 | 229.75 | 229.75 | 229.75 | 229.75 |
| 1,880 | 229.75 | 229.75 | 229.75 | 229.75 | 229.75 |
| 1,885 | 229.75 | 229.75 | 229.75 | 229.75 | 229.75 |
| 1,890 | 229.75 | 229.75 | 229.75 | 229.75 | 229.75 |
| 1,895 | 229.75 | 229.75 | 229.75 | 229.75 | 229.75 |
| 1,900 | 229.75 | 229.75 | 229.75 | 229.75 | 229.75 |
| 1,905 | 229.75 | 229.75 | 229.75 | 229.75 | 229.75 |
| 1,910 | 229.75 | 229.75 | 229.75 | 229.75 | 229.75 |
| 1,915 | 229.75 | 229.75 | 229.75 | 229.75 | 229.75 |
| 1,920 | 229.75 | 229.75 | 229.75 | 229.75 | 229.75 |
| 1,925 | 229.75 | 229.75 | 229.75 | 229.75 | 229.75 |
| 1,930 | 229.75 | 229.75 | 229.75 | 229.75 | 229.75 |
| 1,935 | 229.75 | 229.75 | 229.75 | 229.75 | 229.75 |
| 1,940 | 229.75 | 229.75 | 229.75 | 229.75 | 229.75 |
| 1,945 | 229.75 | 229.75 | 229.75 | 229.75 | 229.75 |
| 1,950 | 229.75 | 229.75 | 229.75 | 229.75 | 229.75 |
| 1,955 | 229.75 | 229.75 | 229.75 | 229.75 | 229.75 |
| 1,960 | 229.75 | 229.75 | 229.75 | 229.75 | 229.75 |
| 1,965 | 229.75 | 229.75 | 229.75 | 229.75 | 229.75 |
| 1,970 | 229.75 | 229.75 | 229.75 | 229.75 | 229.75 |
| 1,975 | 229.75 | 229.75 | 229.75 | 229.75 | 229.75 |
| 1,980 | 229.75 | 229.75 | 229.75 | 229.75 | 229.75 |
| 1,985 | 229.75 | 229.75 | 229.75 | 229.75 | 229.75 |
| 1,990 | 229.75 | 229.75 | 229.75 | 229.75 | 229.75 |
| 1,995 | 229.75 | 229.75 | 229.75 | 229.75 | 229.75 |
| 2,000 | 229.75 | (N/A) | (N/A) | (N/A) | (N/A) |

# Basin 3G Drawdown

Subsection: Outlet Input Data
Label: Outlet#1 with Underdrain
Scenario: Drawdown

Return Event: 100 years
Storm Event:

| Requested Pond Water Surface Elevations | |
|---|---|
| Minimum (Headwater) | 229.50 ft |
| Increment (Headwater) | 0.10 ft |
| Maximum (Headwater) | 236.50 ft |

## Outlet Connectivity

| Structure Type | Outlet ID | Direction | Outfall | E1 (ft) | E2 (ft) |
|---|---|---|---|---|---|
| Orifice-Circular | Orifice - LF | Forward | TW | 233.25 | 236.50 |
| Orifice-Area | Orifice - MF | Forward | TW | 233.90 | 236.50 |
| Inlet Box | Riser - 1 | Forward | TW | 235.05 | 236.50 |
| Orifice-Circular | Orifice - Underdrain | Forward | TW | 229.75 | 236.50 |
| Tailwater Settings | Tailwater | | | (N/A) | (N/A) |

# Basin 3G Drawdown

Subsection: Outlet Input Data
Label: Outlet#1 with Underdrain
Scenario: Drawdown

Return Event: 100 years
Storm Event:

| Structure ID: Orifice - LF<br>Structure Type: Orifice-Circular | |
|---|---|
| Number of Openings | 1 |
| Elevation | 233.25 ft |
| Orifice Diameter | 0.7 in |
| Orifice Coefficient | 0.600 |

| Structure ID: Riser - 1<br>Structure Type: Inlet Box | |
|---|---|
| Number of Openings | 1 |
| Elevation | 235.05 ft |
| Orifice Area | 4.7 ft² |
| Orifice Coefficient | 0.600 |
| Weir Length | 9.20 ft |
| Weir Coefficient | 3.00 (ft^0.5)/s |
| K Reverse | 1.000 |
| Manning's n | 0.000 |
| Kev, Charged Riser | 0.000 |
| Weir Submergence | False |
| Orifice H to crest | True |

| Structure ID: Orifice - MF<br>Structure Type: Orifice-Area | |
|---|---|
| Number of Openings | 3 |
| Elevation | 233.90 ft |
| Orifice Area | 0.3 ft² |
| Top Elevation | 234.25 ft |
| Datum Elevation | 234.00 ft |
| Orifice Coefficient | 0.600 |

| Structure ID: Orifice - Underdrain<br>Structure Type: Orifice-Circular | |
|---|---|
| Number of Openings | 1 |
| Elevation | 229.75 ft |
| Orifice Diameter | 1.2 in |
| Orifice Coefficient | 0.600 |

| Structure ID: TW<br>Structure Type: TW Setup, DS Channel | |
|---|---|
| Tailwater Type | Free Outfall |

| Convergence Tolerances |
|---|

# Basin 3G Drawdown

Subsection: Outlet Input Data
Label: Outlet#1 with Underdrain
Scenario: Drawdown

Return Event: 100 years
Storm Event:

| Convergence Tolerances | |
|---|---|
| Maximum Iterations | 80 |
| Tailwater Tolerance (Minimum) | 0.01 ft |
| Tailwater Tolerance (Maximum) | 0.10 ft |
| Headwater Tolerance (Minimum) | 0.01 ft |
| Headwater Tolerance (Maximum) | 0.10 ft |
| Flow Tolerance (Minimum) | 0.001 ft³/s |
| Flow Tolerance (Maximum) | 10.000 ft³/s |

# Basin 3G Drawdown

Subsection: Elevation-Volume-Flow Table (Pond)
Label: 1
Scenario: Drawdown

Return Event: 100 years
Storm Event:

| Infiltration | |
|---|---|
| Infiltration Method (Computed) | No Infiltration |

| Initial Conditions | |
|---|---|
| Elevation (Water Surface, Initial) | 236.50 ft |
| Volume (Initial) | 0.320 ac-ft |
| Flow (Initial Outlet) | 33.07 ft³/s |
| Flow (Initial Infiltration) | 0.00 ft³/s |
| Flow (Initial, Total) | 33.07 ft³/s |
| Time Increment | 1 min |

| Elevation (ft) | Outflow (ft³/s) | Storage (ac-ft) | Area (ft²) | Infiltration (ft³/s) | Flow (Total) (ft³/s) | 2S/t + O (ft³/s) |
|---|---|---|---|---|---|---|
| 229.50 | 0.00 | 0.000 | 10.000 | 0.00 | 0.00 | 0.00 |
| 229.60 | 0.00 | 0.000 | 10.000 | 0.00 | 0.00 | 0.03 |
| 229.70 | 0.00 | 0.000 | 10.000 | 0.00 | 0.00 | 0.07 |
| 229.75 | 0.00 | 0.000 | 10.000 | 0.00 | 0.00 | 0.08 |
| 229.80 | 0.00 | 0.000 | 10.000 | 0.00 | 0.00 | 0.10 |
| 229.90 | 0.01 | 0.000 | 10.000 | 0.00 | 0.01 | 0.15 |
| 230.00 | 0.02 | 0.000 | 10.000 | 0.00 | 0.02 | 0.18 |
| 230.10 | 0.02 | 0.000 | 10.000 | 0.00 | 0.02 | 0.22 |
| 230.20 | 0.02 | 0.000 | 10.000 | 0.00 | 0.02 | 0.26 |
| 230.30 | 0.03 | 0.000 | 10.000 | 0.00 | 0.03 | 0.29 |
| 230.40 | 0.03 | 0.000 | 10.000 | 0.00 | 0.03 | 0.33 |
| 230.50 | 0.03 | 0.000 | 10.000 | 0.00 | 0.03 | 0.36 |
| 230.60 | 0.03 | 0.000 | 10.000 | 0.00 | 0.03 | 0.40 |
| 230.70 | 0.04 | 0.000 | 10.000 | 0.00 | 0.04 | 0.44 |
| 230.80 | 0.04 | 0.000 | 10.000 | 0.00 | 0.04 | 0.47 |
| 230.90 | 0.04 | 0.000 | 10.000 | 0.00 | 0.04 | 0.51 |
| 231.00 | 0.04 | 0.000 | 10.000 | 0.00 | 0.04 | 0.54 |
| 231.10 | 0.04 | 0.000 | 10.000 | 0.00 | 0.04 | 0.58 |
| 231.20 | 0.04 | 0.000 | 10.000 | 0.00 | 0.04 | 0.61 |
| 231.30 | 0.05 | 0.000 | 10.000 | 0.00 | 0.05 | 0.65 |
| 231.40 | 0.05 | 0.000 | 10.000 | 0.00 | 0.05 | 0.68 |
| 231.50 | 0.05 | 0.000 | 10.000 | 0.00 | 0.05 | 0.72 |
| 231.60 | 0.05 | 0.000 | 10.000 | 0.00 | 0.05 | 0.75 |
| 231.70 | 0.05 | 0.001 | 10.000 | 0.00 | 0.05 | 0.79 |
| 231.80 | 0.05 | 0.001 | 10.000 | 0.00 | 0.05 | 0.82 |
| 231.90 | 0.05 | 0.001 | 10.000 | 0.00 | 0.05 | 0.85 |
| 232.00 | 0.06 | 0.001 | 10.000 | 0.00 | 0.06 | 0.89 |
| 232.10 | 0.06 | 0.001 | 10.000 | 0.00 | 0.06 | 0.92 |
| 232.20 | 0.06 | 0.001 | 10.000 | 0.00 | 0.06 | 0.96 |

# Basin 3G Drawdown

Subsection: Elevation-Volume-Flow Table (Pond) Return Event: 100 years
Label: 1 Storm Event:
Scenario: Drawdown

| Elevation (ft) | Outflow (ft³/s) | Storage (ac-ft) | Area (ft²) | Infiltration (ft³/s) | Flow (Total) (ft³/s) | 2S/t + O (ft³/s) |
|---|---|---|---|---|---|---|
| 232.30 | 0.06 | 0.001 | 10.000 | 0.00 | 0.06 | 0.99 |
| 232.40 | 0.06 | 0.001 | 10.000 | 0.00 | 0.06 | 1.03 |
| 232.50 | 0.06 | 0.001 | 1,852.000 | 0.00 | 0.06 | 1.28 |
| 232.60 | 0.06 | 0.005 | 1,923.945 | 0.00 | 0.06 | 7.57 |
| 232.70 | 0.06 | 0.010 | 1,997.260 | 0.00 | 0.06 | 14.11 |
| 232.80 | 0.07 | 0.014 | 2,071.946 | 0.00 | 0.07 | 20.89 |
| 232.90 | 0.07 | 0.019 | 2,148.004 | 0.00 | 0.07 | 27.93 |
| 233.00 | 0.07 | 0.024 | 2,225.432 | 0.00 | 0.07 | 35.22 |
| 233.10 | 0.07 | 0.029 | 2,304.231 | 0.00 | 0.07 | 42.77 |
| 233.20 | 0.07 | 0.035 | 2,384.401 | 0.00 | 0.07 | 50.58 |
| 233.25 | 0.07 | 0.038 | 2,425.000 | 0.00 | 0.07 | 54.59 |
| 233.30 | 0.07 | 0.040 | 2,462.818 | 0.00 | 0.07 | 58.67 |
| 233.40 | 0.08 | 0.046 | 2,539.333 | 0.00 | 0.08 | 67.01 |
| 233.50 | 0.08 | 0.052 | 2,617.018 | 0.00 | 0.08 | 75.60 |
| 233.60 | 0.08 | 0.058 | 2,695.873 | 0.00 | 0.08 | 84.46 |
| 233.70 | 0.08 | 0.064 | 2,775.899 | 0.00 | 0.08 | 93.58 |
| 233.80 | 0.08 | 0.071 | 2,857.096 | 0.00 | 0.08 | 102.97 |
| 233.90 | 0.09 | 0.078 | 2,939.463 | 0.00 | 0.09 | 112.63 |
| 234.00 | 0.60 | 0.084 | 3,023.000 | 0.00 | 0.60 | 123.09 |
| 234.10 | 1.12 | 0.091 | 3,103.357 | 0.00 | 1.12 | 133.82 |
| 234.20 | 1.64 | 0.099 | 3,184.768 | 0.00 | 1.64 | 144.81 |
| 234.30 | 2.07 | 0.106 | 3,267.232 | 0.00 | 2.07 | 156.00 |
| 234.40 | 2.38 | 0.114 | 3,350.751 | 0.00 | 2.38 | 167.33 |
| 234.50 | 2.65 | 0.121 | 3,435.324 | 0.00 | 2.65 | 178.91 |
| 234.60 | 2.89 | 0.129 | 3,520.951 | 0.00 | 2.89 | 190.75 |
| 234.70 | 3.12 | 0.138 | 3,607.632 | 0.00 | 3.12 | 202.86 |
| 234.80 | 3.33 | 0.146 | 3,695.368 | 0.00 | 3.33 | 215.24 |
| 234.90 | 3.53 | 0.155 | 3,784.157 | 0.00 | 3.53 | 227.90 |
| 235.00 | 3.71 | 0.163 | 3,874.000 | 0.00 | 3.71 | 240.85 |
| 235.05 | 3.80 | 0.168 | 3,917.086 | 0.00 | 3.80 | 247.44 |
| 235.10 | 4.20 | 0.172 | 3,960.411 | 0.00 | 4.20 | 254.40 |
| 235.20 | 5.66 | 0.182 | 4,047.775 | 0.00 | 5.66 | 269.21 |
| 235.30 | 7.67 | 0.191 | 4,136.092 | 0.00 | 7.67 | 284.86 |
| 235.40 | 10.09 | 0.200 | 4,225.363 | 0.00 | 10.09 | 301.21 |
| 235.50 | 12.86 | 0.210 | 4,315.586 | 0.00 | 12.86 | 318.22 |
| 235.60 | 15.93 | 0.220 | 4,406.763 | 0.00 | 15.93 | 335.83 |
| 235.70 | 19.28 | 0.231 | 4,498.892 | 0.00 | 19.28 | 354.02 |
| 235.80 | 22.88 | 0.241 | 4,591.975 | 0.00 | 22.88 | 372.77 |
| 235.90 | 25.95 | 0.252 | 4,686.011 | 0.00 | 25.95 | 391.29 |
| 236.00 | 27.27 | 0.262 | 4,781.000 | 0.00 | 27.27 | 408.39 |
| 236.10 | 28.53 | 0.274 | 4,874.201 | 0.00 | 28.53 | 425.74 |
| 236.20 | 29.73 | 0.285 | 4,968.301 | 0.00 | 29.73 | 443.35 |
| 236.30 | 30.88 | 0.296 | 5,063.301 | 0.00 | 30.88 | 461.23 |

# Basin 3G Drawdown

Subsection: Elevation-Volume-Flow Table (Pond) Return Event: 100 years
Label: 1 Storm Event:
Scenario: Drawdown

| Elevation (ft) | Outflow ($ft^3/s$) | Storage (ac-ft) | Area ($ft^2$) | Infiltration ($ft^3/s$) | Flow (Total) ($ft^3/s$) | 2S/t + O ($ft^3/s$) |
|---|---|---|---|---|---|---|
| 236.40 | 32.00 | 0.308 | 5,159.201 | 0.00 | 32.00 | 479.37 |
| 236.50 | 33.07 | 0.320 | 5,256.000 | 0.00 | 33.07 | 497.80 |

# Basin 3G Drawdown

## Index

1

1 (Elevation-Volume-Flow Table (Pond))...

1 (Elevation-Volume-Flow Table (Pond), 100 years (Drawdown))...14, 15, 16

1 (OUT) (Time vs. Elevation)...

1 (OUT) (Time vs. Elevation, 100 years (Drawdown))...1, 2, 3, 4, 5, 6, 7, 8, 9, 10

O

Outlet#1 with Underdrain (Outlet Input Data)...

Outlet#1 with Underdrain (Outlet Input Data, 100 years (Drawdown))...11, 12, 13

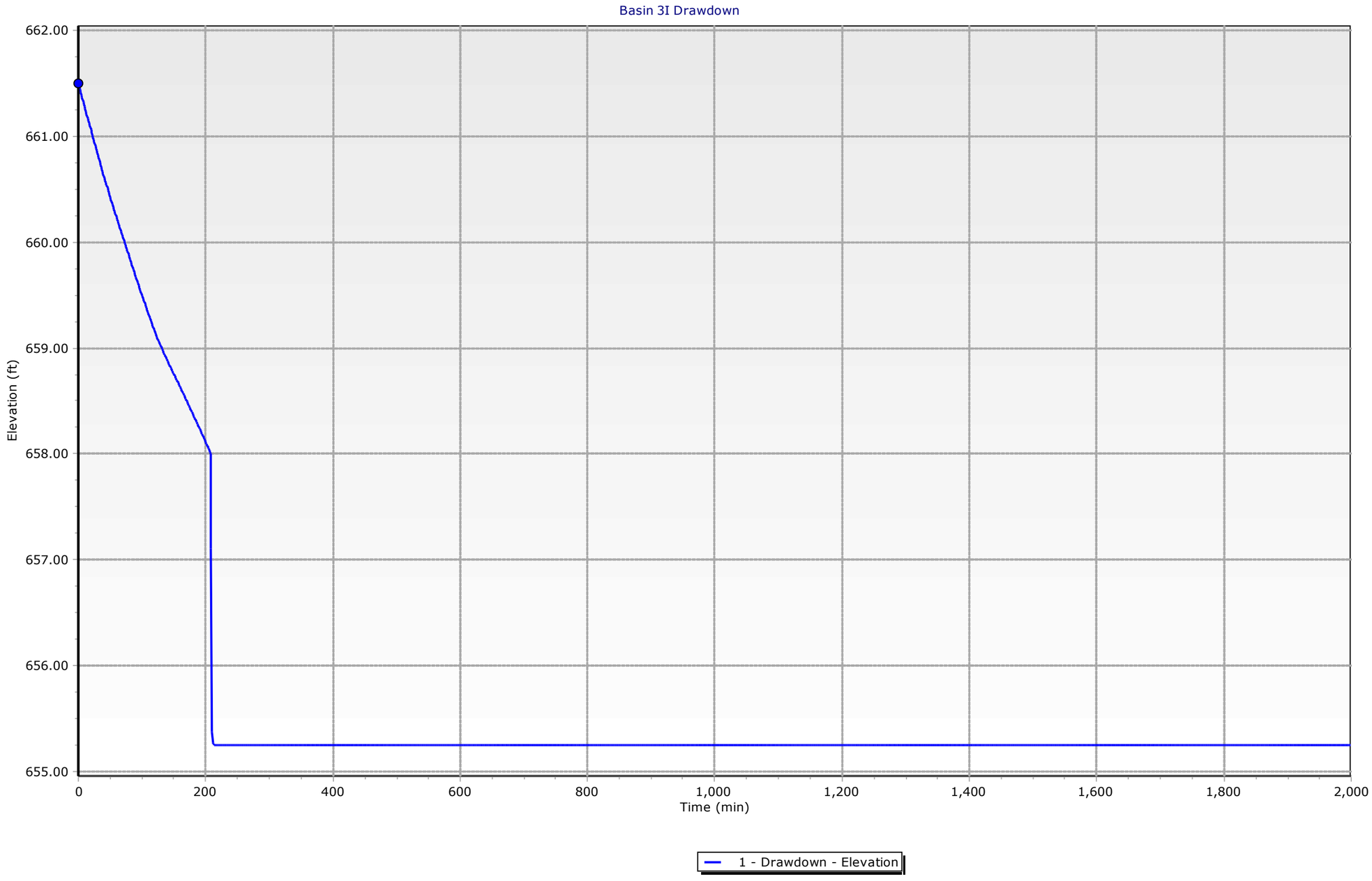
Basin 3I Drawdown
662.00
661.00
660.00
659.00
658.00
657.00
656.00
655.00
Elevation (ft)
0
200
400
600
800
1,000
1,200
1,400
1,600
1,800
2,000
Time (min)
1 - Drawdown - Elevation

# Table of Contents


| | | |
|---|---|---|
| 1 (OUT) | Time vs. Elevation | 1 |
| Outlet#1- w/ Underdrain | Outlet Input Data | 11 |
| 1 | Elevation-Volume-Flow Table (Pond) | 14 |

# Basin 3I Drawdown

Subsection: Time vs. Elevation
Label: 1 (OUT)
Scenario: Drawdown

Return Event: 100 years
Storm Event:

**Time vs. Elevation (ft)**

**Output Time increment = 1 min**
**Time on left represents time for first value in each row.**

| Time (min) | Elevation (ft) | Elevation (ft) | Elevation (ft) | Elevation (ft) | Elevation (ft) |
|---|---|---|---|---|---|
| 0 | 661.50 | 661.48 | 661.46 | 661.43 | 661.41 |
| 5 | 661.39 | 661.37 | 661.34 | 661.32 | 661.30 |
| 10 | 661.28 | 661.25 | 661.23 | 661.21 | 661.19 |
| 15 | 661.17 | 661.14 | 661.12 | 661.10 | 661.08 |
| 20 | 661.06 | 661.03 | 661.01 | 660.99 | 660.97 |
| 25 | 660.95 | 660.93 | 660.90 | 660.88 | 660.86 |
| 30 | 660.84 | 660.82 | 660.80 | 660.77 | 660.75 |
| 35 | 660.73 | 660.71 | 660.69 | 660.67 | 660.65 |
| 40 | 660.63 | 660.61 | 660.59 | 660.56 | 660.54 |
| 45 | 660.52 | 660.50 | 660.48 | 660.46 | 660.44 |
| 50 | 660.43 | 660.41 | 660.39 | 660.37 | 660.35 |
| 55 | 660.33 | 660.31 | 660.29 | 660.27 | 660.25 |
| 60 | 660.24 | 660.22 | 660.20 | 660.18 | 660.16 |
| 65 | 660.14 | 660.12 | 660.10 | 660.08 | 660.07 |
| 70 | 660.05 | 660.03 | 660.01 | 659.99 | 659.97 |
| 75 | 659.95 | 659.94 | 659.92 | 659.90 | 659.88 |
| 80 | 659.86 | 659.84 | 659.82 | 659.81 | 659.79 |
| 85 | 659.77 | 659.75 | 659.73 | 659.71 | 659.70 |
| 90 | 659.68 | 659.66 | 659.64 | 659.62 | 659.61 |
| 95 | 659.59 | 659.57 | 659.55 | 659.53 | 659.52 |
| 100 | 659.50 | 659.48 | 659.46 | 659.45 | 659.43 |
| 105 | 659.41 | 659.39 | 659.38 | 659.36 | 659.34 |
| 110 | 659.33 | 659.31 | 659.29 | 659.27 | 659.26 |
| 115 | 659.24 | 659.22 | 659.21 | 659.19 | 659.18 |
| 120 | 659.16 | 659.14 | 659.13 | 659.11 | 659.10 |
| 125 | 659.08 | 659.07 | 659.05 | 659.04 | 659.03 |
| 130 | 659.01 | 659.00 | 658.98 | 658.97 | 658.96 |
| 135 | 658.94 | 658.93 | 658.92 | 658.91 | 658.89 |
| 140 | 658.88 | 658.87 | 658.85 | 658.84 | 658.83 |
| 145 | 658.82 | 658.80 | 658.79 | 658.78 | 658.77 |
| 150 | 658.76 | 658.74 | 658.73 | 658.72 | 658.71 |
| 155 | 658.69 | 658.68 | 658.67 | 658.66 | 658.64 |
| 160 | 658.63 | 658.62 | 658.61 | 658.59 | 658.58 |
| 165 | 658.57 | 658.55 | 658.54 | 658.53 | 658.52 |
| 170 | 658.50 | 658.49 | 658.48 | 658.47 | 658.45 |
| 175 | 658.44 | 658.43 | 658.41 | 658.40 | 658.39 |
| 180 | 658.38 | 658.36 | 658.35 | 658.34 | 658.32 |
| 185 | 658.31 | 658.30 | 658.28 | 658.27 | 658.26 |
| 190 | 658.25 | 658.23 | 658.22 | 658.21 | 658.19 |
| 195 | 658.18 | 658.17 | 658.15 | 658.14 | 658.13 |

# Basin 3I Drawdown

Subsection: Time vs. Elevation
Label: 1 (OUT)
Scenario: Drawdown

Return Event: 100 years
Storm Event:

**Time vs. Elevation (ft)**

**Output Time increment = 1 min**
**Time on left represents time for first value in each row.**

| Time (min) | Elevation (ft) | Elevation (ft) | Elevation (ft) | Elevation (ft) | Elevation (ft) |
|---|---|---|---|---|---|
| 200 | 658.11 | 658.10 | 658.09 | 658.07 | 658.06 |
| 205 | 658.05 | 658.03 | 658.02 | 658.01 | 657.11 |
| 210 | 655.37 | 655.27 | 655.26 | 655.26 | 655.25 |
| 215 | 655.25 | 655.25 | 655.25 | 655.25 | 655.25 |
| 220 | 655.25 | 655.25 | 655.25 | 655.25 | 655.25 |
| 225 | 655.25 | 655.25 | 655.25 | 655.25 | 655.25 |
| 230 | 655.25 | 655.25 | 655.25 | 655.25 | 655.25 |
| 235 | 655.25 | 655.25 | 655.25 | 655.25 | 655.25 |
| 240 | 655.25 | 655.25 | 655.25 | 655.25 | 655.25 |
| 245 | 655.25 | 655.25 | 655.25 | 655.25 | 655.25 |
| 250 | 655.25 | 655.25 | 655.25 | 655.25 | 655.25 |
| 255 | 655.25 | 655.25 | 655.25 | 655.25 | 655.25 |
| 260 | 655.25 | 655.25 | 655.25 | 655.25 | 655.25 |
| 265 | 655.25 | 655.25 | 655.25 | 655.25 | 655.25 |
| 270 | 655.25 | 655.25 | 655.25 | 655.25 | 655.25 |
| 275 | 655.25 | 655.25 | 655.25 | 655.25 | 655.25 |
| 280 | 655.25 | 655.25 | 655.25 | 655.25 | 655.25 |
| 285 | 655.25 | 655.25 | 655.25 | 655.25 | 655.25 |
| 290 | 655.25 | 655.25 | 655.25 | 655.25 | 655.25 |
| 295 | 655.25 | 655.25 | 655.25 | 655.25 | 655.25 |
| 300 | 655.25 | 655.25 | 655.25 | 655.25 | 655.25 |
| 305 | 655.25 | 655.25 | 655.25 | 655.25 | 655.25 |
| 310 | 655.25 | 655.25 | 655.25 | 655.25 | 655.25 |
| 315 | 655.25 | 655.25 | 655.25 | 655.25 | 655.25 |
| 320 | 655.25 | 655.25 | 655.25 | 655.25 | 655.25 |
| 325 | 655.25 | 655.25 | 655.25 | 655.25 | 655.25 |
| 330 | 655.25 | 655.25 | 655.25 | 655.25 | 655.25 |
| 335 | 655.25 | 655.25 | 655.25 | 655.25 | 655.25 |
| 340 | 655.25 | 655.25 | 655.25 | 655.25 | 655.25 |
| 345 | 655.25 | 655.25 | 655.25 | 655.25 | 655.25 |
| 350 | 655.25 | 655.25 | 655.25 | 655.25 | 655.25 |
| 355 | 655.25 | 655.25 | 655.25 | 655.25 | 655.25 |
| 360 | 655.25 | 655.25 | 655.25 | 655.25 | 655.25 |
| 365 | 655.25 | 655.25 | 655.25 | 655.25 | 655.25 |
| 370 | 655.25 | 655.25 | 655.25 | 655.25 | 655.25 |
| 375 | 655.25 | 655.25 | 655.25 | 655.25 | 655.25 |
| 380 | 655.25 | 655.25 | 655.25 | 655.25 | 655.25 |
| 385 | 655.25 | 655.25 | 655.25 | 655.25 | 655.25 |
| 390 | 655.25 | 655.25 | 655.25 | 655.25 | 655.25 |
| 395 | 655.25 | 655.25 | 655.25 | 655.25 | 655.25 |
| 400 | 655.25 | 655.25 | 655.25 | 655.25 | 655.25 |

# Basin 3I Drawdown

Subsection: Time vs. Elevation
Label: 1 (OUT)
Scenario: Drawdown

Return Event: 100 years
Storm Event:

**Time vs. Elevation (ft)**

**Output Time increment = 1 min**
**Time on left represents time for first value in each row.**

| Time (min) | Elevation (ft) | Elevation (ft) | Elevation (ft) | Elevation (ft) | Elevation (ft) |
|---|---|---|---|---|---|
| 405 | 655.25 | 655.25 | 655.25 | 655.25 | 655.25 |
| 410 | 655.25 | 655.25 | 655.25 | 655.25 | 655.25 |
| 415 | 655.25 | 655.25 | 655.25 | 655.25 | 655.25 |
| 420 | 655.25 | 655.25 | 655.25 | 655.25 | 655.25 |
| 425 | 655.25 | 655.25 | 655.25 | 655.25 | 655.25 |
| 430 | 655.25 | 655.25 | 655.25 | 655.25 | 655.25 |
| 435 | 655.25 | 655.25 | 655.25 | 655.25 | 655.25 |
| 440 | 655.25 | 655.25 | 655.25 | 655.25 | 655.25 |
| 445 | 655.25 | 655.25 | 655.25 | 655.25 | 655.25 |
| 450 | 655.25 | 655.25 | 655.25 | 655.25 | 655.25 |
| 455 | 655.25 | 655.25 | 655.25 | 655.25 | 655.25 |
| 460 | 655.25 | 655.25 | 655.25 | 655.25 | 655.25 |
| 465 | 655.25 | 655.25 | 655.25 | 655.25 | 655.25 |
| 470 | 655.25 | 655.25 | 655.25 | 655.25 | 655.25 |
| 475 | 655.25 | 655.25 | 655.25 | 655.25 | 655.25 |
| 480 | 655.25 | 655.25 | 655.25 | 655.25 | 655.25 |
| 485 | 655.25 | 655.25 | 655.25 | 655.25 | 655.25 |
| 490 | 655.25 | 655.25 | 655.25 | 655.25 | 655.25 |
| 495 | 655.25 | 655.25 | 655.25 | 655.25 | 655.25 |
| 500 | 655.25 | 655.25 | 655.25 | 655.25 | 655.25 |
| 505 | 655.25 | 655.25 | 655.25 | 655.25 | 655.25 |
| 510 | 655.25 | 655.25 | 655.25 | 655.25 | 655.25 |
| 515 | 655.25 | 655.25 | 655.25 | 655.25 | 655.25 |
| 520 | 655.25 | 655.25 | 655.25 | 655.25 | 655.25 |
| 525 | 655.25 | 655.25 | 655.25 | 655.25 | 655.25 |
| 530 | 655.25 | 655.25 | 655.25 | 655.25 | 655.25 |
| 535 | 655.25 | 655.25 | 655.25 | 655.25 | 655.25 |
| 540 | 655.25 | 655.25 | 655.25 | 655.25 | 655.25 |
| 545 | 655.25 | 655.25 | 655.25 | 655.25 | 655.25 |
| 550 | 655.25 | 655.25 | 655.25 | 655.25 | 655.25 |
| 555 | 655.25 | 655.25 | 655.25 | 655.25 | 655.25 |
| 560 | 655.25 | 655.25 | 655.25 | 655.25 | 655.25 |
| 565 | 655.25 | 655.25 | 655.25 | 655.25 | 655.25 |
| 570 | 655.25 | 655.25 | 655.25 | 655.25 | 655.25 |
| 575 | 655.25 | 655.25 | 655.25 | 655.25 | 655.25 |
| 580 | 655.25 | 655.25 | 655.25 | 655.25 | 655.25 |
| 585 | 655.25 | 655.25 | 655.25 | 655.25 | 655.25 |
| 590 | 655.25 | 655.25 | 655.25 | 655.25 | 655.25 |
| 595 | 655.25 | 655.25 | 655.25 | 655.25 | 655.25 |
| 600 | 655.25 | 655.25 | 655.25 | 655.25 | 655.25 |
| 605 | 655.25 | 655.25 | 655.25 | 655.25 | 655.25 |

# Basin 3I Drawdown

Subsection: Time vs. Elevation
Label: 1 (OUT)
Scenario: Drawdown

Return Event: 100 years
Storm Event:

**Time vs. Elevation (ft)**

**Output Time increment = 1 min**
**Time on left represents time for first value in each row.**

| Time (min) | Elevation (ft) | Elevation (ft) | Elevation (ft) | Elevation (ft) | Elevation (ft) |
|---|---|---|---|---|---|
| 610 | 655.25 | 655.25 | 655.25 | 655.25 | 655.25 |
| 615 | 655.25 | 655.25 | 655.25 | 655.25 | 655.25 |
| 620 | 655.25 | 655.25 | 655.25 | 655.25 | 655.25 |
| 625 | 655.25 | 655.25 | 655.25 | 655.25 | 655.25 |
| 630 | 655.25 | 655.25 | 655.25 | 655.25 | 655.25 |
| 635 | 655.25 | 655.25 | 655.25 | 655.25 | 655.25 |
| 640 | 655.25 | 655.25 | 655.25 | 655.25 | 655.25 |
| 645 | 655.25 | 655.25 | 655.25 | 655.25 | 655.25 |
| 650 | 655.25 | 655.25 | 655.25 | 655.25 | 655.25 |
| 655 | 655.25 | 655.25 | 655.25 | 655.25 | 655.25 |
| 660 | 655.25 | 655.25 | 655.25 | 655.25 | 655.25 |
| 665 | 655.25 | 655.25 | 655.25 | 655.25 | 655.25 |
| 670 | 655.25 | 655.25 | 655.25 | 655.25 | 655.25 |
| 675 | 655.25 | 655.25 | 655.25 | 655.25 | 655.25 |
| 680 | 655.25 | 655.25 | 655.25 | 655.25 | 655.25 |
| 685 | 655.25 | 655.25 | 655.25 | 655.25 | 655.25 |
| 690 | 655.25 | 655.25 | 655.25 | 655.25 | 655.25 |
| 695 | 655.25 | 655.25 | 655.25 | 655.25 | 655.25 |
| 700 | 655.25 | 655.25 | 655.25 | 655.25 | 655.25 |
| 705 | 655.25 | 655.25 | 655.25 | 655.25 | 655.25 |
| 710 | 655.25 | 655.25 | 655.25 | 655.25 | 655.25 |
| 715 | 655.25 | 655.25 | 655.25 | 655.25 | 655.25 |
| 720 | 655.25 | 655.25 | 655.25 | 655.25 | 655.25 |
| 725 | 655.25 | 655.25 | 655.25 | 655.25 | 655.25 |
| 730 | 655.25 | 655.25 | 655.25 | 655.25 | 655.25 |
| 735 | 655.25 | 655.25 | 655.25 | 655.25 | 655.25 |
| 740 | 655.25 | 655.25 | 655.25 | 655.25 | 655.25 |
| 745 | 655.25 | 655.25 | 655.25 | 655.25 | 655.25 |
| 750 | 655.25 | 655.25 | 655.25 | 655.25 | 655.25 |
| 755 | 655.25 | 655.25 | 655.25 | 655.25 | 655.25 |
| 760 | 655.25 | 655.25 | 655.25 | 655.25 | 655.25 |
| 765 | 655.25 | 655.25 | 655.25 | 655.25 | 655.25 |
| 770 | 655.25 | 655.25 | 655.25 | 655.25 | 655.25 |
| 775 | 655.25 | 655.25 | 655.25 | 655.25 | 655.25 |
| 780 | 655.25 | 655.25 | 655.25 | 655.25 | 655.25 |
| 785 | 655.25 | 655.25 | 655.25 | 655.25 | 655.25 |
| 790 | 655.25 | 655.25 | 655.25 | 655.25 | 655.25 |
| 795 | 655.25 | 655.25 | 655.25 | 655.25 | 655.25 |
| 800 | 655.25 | 655.25 | 655.25 | 655.25 | 655.25 |
| 805 | 655.25 | 655.25 | 655.25 | 655.25 | 655.25 |
| 810 | 655.25 | 655.25 | 655.25 | 655.25 | 655.25 |

# Basin 3I Drawdown

Subsection: Time vs. Elevation
Label: 1 (OUT)
Scenario: Drawdown

Return Event: 100 years
Storm Event:

**Time vs. Elevation (ft)**

**Output Time increment = 1 min**
**Time on left represents time for first value in each row.**

| Time (min) | Elevation (ft) | Elevation (ft) | Elevation (ft) | Elevation (ft) | Elevation (ft) |
|---|---|---|---|---|---|
| 815 | 655.25 | 655.25 | 655.25 | 655.25 | 655.25 |
| 820 | 655.25 | 655.25 | 655.25 | 655.25 | 655.25 |
| 825 | 655.25 | 655.25 | 655.25 | 655.25 | 655.25 |
| 830 | 655.25 | 655.25 | 655.25 | 655.25 | 655.25 |
| 835 | 655.25 | 655.25 | 655.25 | 655.25 | 655.25 |
| 840 | 655.25 | 655.25 | 655.25 | 655.25 | 655.25 |
| 845 | 655.25 | 655.25 | 655.25 | 655.25 | 655.25 |
| 850 | 655.25 | 655.25 | 655.25 | 655.25 | 655.25 |
| 855 | 655.25 | 655.25 | 655.25 | 655.25 | 655.25 |
| 860 | 655.25 | 655.25 | 655.25 | 655.25 | 655.25 |
| 865 | 655.25 | 655.25 | 655.25 | 655.25 | 655.25 |
| 870 | 655.25 | 655.25 | 655.25 | 655.25 | 655.25 |
| 875 | 655.25 | 655.25 | 655.25 | 655.25 | 655.25 |
| 880 | 655.25 | 655.25 | 655.25 | 655.25 | 655.25 |
| 885 | 655.25 | 655.25 | 655.25 | 655.25 | 655.25 |
| 890 | 655.25 | 655.25 | 655.25 | 655.25 | 655.25 |
| 895 | 655.25 | 655.25 | 655.25 | 655.25 | 655.25 |
| 900 | 655.25 | 655.25 | 655.25 | 655.25 | 655.25 |
| 905 | 655.25 | 655.25 | 655.25 | 655.25 | 655.25 |
| 910 | 655.25 | 655.25 | 655.25 | 655.25 | 655.25 |
| 915 | 655.25 | 655.25 | 655.25 | 655.25 | 655.25 |
| 920 | 655.25 | 655.25 | 655.25 | 655.25 | 655.25 |
| 925 | 655.25 | 655.25 | 655.25 | 655.25 | 655.25 |
| 930 | 655.25 | 655.25 | 655.25 | 655.25 | 655.25 |
| 935 | 655.25 | 655.25 | 655.25 | 655.25 | 655.25 |
| 940 | 655.25 | 655.25 | 655.25 | 655.25 | 655.25 |
| 945 | 655.25 | 655.25 | 655.25 | 655.25 | 655.25 |
| 950 | 655.25 | 655.25 | 655.25 | 655.25 | 655.25 |
| 955 | 655.25 | 655.25 | 655.25 | 655.25 | 655.25 |
| 960 | 655.25 | 655.25 | 655.25 | 655.25 | 655.25 |
| 965 | 655.25 | 655.25 | 655.25 | 655.25 | 655.25 |
| 970 | 655.25 | 655.25 | 655.25 | 655.25 | 655.25 |
| 975 | 655.25 | 655.25 | 655.25 | 655.25 | 655.25 |
| 980 | 655.25 | 655.25 | 655.25 | 655.25 | 655.25 |
| 985 | 655.25 | 655.25 | 655.25 | 655.25 | 655.25 |
| 990 | 655.25 | 655.25 | 655.25 | 655.25 | 655.25 |
| 995 | 655.25 | 655.25 | 655.25 | 655.25 | 655.25 |
| 1,000 | 655.25 | 655.25 | 655.25 | 655.25 | 655.25 |
| 1,005 | 655.25 | 655.25 | 655.25 | 655.25 | 655.25 |
| 1,010 | 655.25 | 655.25 | 655.25 | 655.25 | 655.25 |
| 1,015 | 655.25 | 655.25 | 655.25 | 655.25 | 655.25 |

# Basin 3I Drawdown

Subsection: Time vs. Elevation
Label: 1 (OUT)
Scenario: Drawdown

Return Event: 100 years
Storm Event:

**Time vs. Elevation (ft)**

**Output Time increment = 1 min**
**Time on left represents time for first value in each row.**

| Time (min) | Elevation (ft) | Elevation (ft) | Elevation (ft) | Elevation (ft) | Elevation (ft) |
|---|---|---|---|---|---|
| 1,020 | 655.25 | 655.25 | 655.25 | 655.25 | 655.25 |
| 1,025 | 655.25 | 655.25 | 655.25 | 655.25 | 655.25 |
| 1,030 | 655.25 | 655.25 | 655.25 | 655.25 | 655.25 |
| 1,035 | 655.25 | 655.25 | 655.25 | 655.25 | 655.25 |
| 1,040 | 655.25 | 655.25 | 655.25 | 655.25 | 655.25 |
| 1,045 | 655.25 | 655.25 | 655.25 | 655.25 | 655.25 |
| 1,050 | 655.25 | 655.25 | 655.25 | 655.25 | 655.25 |
| 1,055 | 655.25 | 655.25 | 655.25 | 655.25 | 655.25 |
| 1,060 | 655.25 | 655.25 | 655.25 | 655.25 | 655.25 |
| 1,065 | 655.25 | 655.25 | 655.25 | 655.25 | 655.25 |
| 1,070 | 655.25 | 655.25 | 655.25 | 655.25 | 655.25 |
| 1,075 | 655.25 | 655.25 | 655.25 | 655.25 | 655.25 |
| 1,080 | 655.25 | 655.25 | 655.25 | 655.25 | 655.25 |
| 1,085 | 655.25 | 655.25 | 655.25 | 655.25 | 655.25 |
| 1,090 | 655.25 | 655.25 | 655.25 | 655.25 | 655.25 |
| 1,095 | 655.25 | 655.25 | 655.25 | 655.25 | 655.25 |
| 1,100 | 655.25 | 655.25 | 655.25 | 655.25 | 655.25 |
| 1,105 | 655.25 | 655.25 | 655.25 | 655.25 | 655.25 |
| 1,110 | 655.25 | 655.25 | 655.25 | 655.25 | 655.25 |
| 1,115 | 655.25 | 655.25 | 655.25 | 655.25 | 655.25 |
| 1,120 | 655.25 | 655.25 | 655.25 | 655.25 | 655.25 |
| 1,125 | 655.25 | 655.25 | 655.25 | 655.25 | 655.25 |
| 1,130 | 655.25 | 655.25 | 655.25 | 655.25 | 655.25 |
| 1,135 | 655.25 | 655.25 | 655.25 | 655.25 | 655.25 |
| 1,140 | 655.25 | 655.25 | 655.25 | 655.25 | 655.25 |
| 1,145 | 655.25 | 655.25 | 655.25 | 655.25 | 655.25 |
| 1,150 | 655.25 | 655.25 | 655.25 | 655.25 | 655.25 |
| 1,155 | 655.25 | 655.25 | 655.25 | 655.25 | 655.25 |
| 1,160 | 655.25 | 655.25 | 655.25 | 655.25 | 655.25 |
| 1,165 | 655.25 | 655.25 | 655.25 | 655.25 | 655.25 |
| 1,170 | 655.25 | 655.25 | 655.25 | 655.25 | 655.25 |
| 1,175 | 655.25 | 655.25 | 655.25 | 655.25 | 655.25 |
| 1,180 | 655.25 | 655.25 | 655.25 | 655.25 | 655.25 |
| 1,185 | 655.25 | 655.25 | 655.25 | 655.25 | 655.25 |
| 1,190 | 655.25 | 655.25 | 655.25 | 655.25 | 655.25 |
| 1,195 | 655.25 | 655.25 | 655.25 | 655.25 | 655.25 |
| 1,200 | 655.25 | 655.25 | 655.25 | 655.25 | 655.25 |
| 1,205 | 655.25 | 655.25 | 655.25 | 655.25 | 655.25 |
| 1,210 | 655.25 | 655.25 | 655.25 | 655.25 | 655.25 |
| 1,215 | 655.25 | 655.25 | 655.25 | 655.25 | 655.25 |
| 1,220 | 655.25 | 655.25 | 655.25 | 655.25 | 655.25 |

# Basin 3I Drawdown

Subsection: Time vs. Elevation
Label: 1 (OUT)
Scenario: Drawdown

Return Event: 100 years
Storm Event:

**Time vs. Elevation (ft)**

**Output Time increment = 1 min**
**Time on left represents time for first value in each row.**

| Time (min) | Elevation (ft) | Elevation (ft) | Elevation (ft) | Elevation (ft) | Elevation (ft) |
|---|---|---|---|---|---|
| 1,225 | 655.25 | 655.25 | 655.25 | 655.25 | 655.25 |
| 1,230 | 655.25 | 655.25 | 655.25 | 655.25 | 655.25 |
| 1,235 | 655.25 | 655.25 | 655.25 | 655.25 | 655.25 |
| 1,240 | 655.25 | 655.25 | 655.25 | 655.25 | 655.25 |
| 1,245 | 655.25 | 655.25 | 655.25 | 655.25 | 655.25 |
| 1,250 | 655.25 | 655.25 | 655.25 | 655.25 | 655.25 |
| 1,255 | 655.25 | 655.25 | 655.25 | 655.25 | 655.25 |
| 1,260 | 655.25 | 655.25 | 655.25 | 655.25 | 655.25 |
| 1,265 | 655.25 | 655.25 | 655.25 | 655.25 | 655.25 |
| 1,270 | 655.25 | 655.25 | 655.25 | 655.25 | 655.25 |
| 1,275 | 655.25 | 655.25 | 655.25 | 655.25 | 655.25 |
| 1,280 | 655.25 | 655.25 | 655.25 | 655.25 | 655.25 |
| 1,285 | 655.25 | 655.25 | 655.25 | 655.25 | 655.25 |
| 1,290 | 655.25 | 655.25 | 655.25 | 655.25 | 655.25 |
| 1,295 | 655.25 | 655.25 | 655.25 | 655.25 | 655.25 |
| 1,300 | 655.25 | 655.25 | 655.25 | 655.25 | 655.25 |
| 1,305 | 655.25 | 655.25 | 655.25 | 655.25 | 655.25 |
| 1,310 | 655.25 | 655.25 | 655.25 | 655.25 | 655.25 |
| 1,315 | 655.25 | 655.25 | 655.25 | 655.25 | 655.25 |
| 1,320 | 655.25 | 655.25 | 655.25 | 655.25 | 655.25 |
| 1,325 | 655.25 | 655.25 | 655.25 | 655.25 | 655.25 |
| 1,330 | 655.25 | 655.25 | 655.25 | 655.25 | 655.25 |
| 1,335 | 655.25 | 655.25 | 655.25 | 655.25 | 655.25 |
| 1,340 | 655.25 | 655.25 | 655.25 | 655.25 | 655.25 |
| 1,345 | 655.25 | 655.25 | 655.25 | 655.25 | 655.25 |
| 1,350 | 655.25 | 655.25 | 655.25 | 655.25 | 655.25 |
| 1,355 | 655.25 | 655.25 | 655.25 | 655.25 | 655.25 |
| 1,360 | 655.25 | 655.25 | 655.25 | 655.25 | 655.25 |
| 1,365 | 655.25 | 655.25 | 655.25 | 655.25 | 655.25 |
| 1,370 | 655.25 | 655.25 | 655.25 | 655.25 | 655.25 |
| 1,375 | 655.25 | 655.25 | 655.25 | 655.25 | 655.25 |
| 1,380 | 655.25 | 655.25 | 655.25 | 655.25 | 655.25 |
| 1,385 | 655.25 | 655.25 | 655.25 | 655.25 | 655.25 |
| 1,390 | 655.25 | 655.25 | 655.25 | 655.25 | 655.25 |
| 1,395 | 655.25 | 655.25 | 655.25 | 655.25 | 655.25 |
| 1,400 | 655.25 | 655.25 | 655.25 | 655.25 | 655.25 |
| 1,405 | 655.25 | 655.25 | 655.25 | 655.25 | 655.25 |
| 1,410 | 655.25 | 655.25 | 655.25 | 655.25 | 655.25 |
| 1,415 | 655.25 | 655.25 | 655.25 | 655.25 | 655.25 |
| 1,420 | 655.25 | 655.25 | 655.25 | 655.25 | 655.25 |
| 1,425 | 655.25 | 655.25 | 655.25 | 655.25 | 655.25 |

# Basin 3I Drawdown

Subsection: Time vs. Elevation
Label: 1 (OUT)
Scenario: Drawdown

Return Event: 100 years
Storm Event:

**Time vs. Elevation (ft)**

**Output Time increment = 1 min**
**Time on left represents time for first value in each row.**

| Time (min) | Elevation (ft) | Elevation (ft) | Elevation (ft) | Elevation (ft) | Elevation (ft) |
|---|---|---|---|---|---|
| 1,430 | 655.25 | 655.25 | 655.25 | 655.25 | 655.25 |
| 1,435 | 655.25 | 655.25 | 655.25 | 655.25 | 655.25 |
| 1,440 | 655.25 | 655.25 | 655.25 | 655.25 | 655.25 |
| 1,445 | 655.25 | 655.25 | 655.25 | 655.25 | 655.25 |
| 1,450 | 655.25 | 655.25 | 655.25 | 655.25 | 655.25 |
| 1,455 | 655.25 | 655.25 | 655.25 | 655.25 | 655.25 |
| 1,460 | 655.25 | 655.25 | 655.25 | 655.25 | 655.25 |
| 1,465 | 655.25 | 655.25 | 655.25 | 655.25 | 655.25 |
| 1,470 | 655.25 | 655.25 | 655.25 | 655.25 | 655.25 |
| 1,475 | 655.25 | 655.25 | 655.25 | 655.25 | 655.25 |
| 1,480 | 655.25 | 655.25 | 655.25 | 655.25 | 655.25 |
| 1,485 | 655.25 | 655.25 | 655.25 | 655.25 | 655.25 |
| 1,490 | 655.25 | 655.25 | 655.25 | 655.25 | 655.25 |
| 1,495 | 655.25 | 655.25 | 655.25 | 655.25 | 655.25 |
| 1,500 | 655.25 | 655.25 | 655.25 | 655.25 | 655.25 |
| 1,505 | 655.25 | 655.25 | 655.25 | 655.25 | 655.25 |
| 1,510 | 655.25 | 655.25 | 655.25 | 655.25 | 655.25 |
| 1,515 | 655.25 | 655.25 | 655.25 | 655.25 | 655.25 |
| 1,520 | 655.25 | 655.25 | 655.25 | 655.25 | 655.25 |
| 1,525 | 655.25 | 655.25 | 655.25 | 655.25 | 655.25 |
| 1,530 | 655.25 | 655.25 | 655.25 | 655.25 | 655.25 |
| 1,535 | 655.25 | 655.25 | 655.25 | 655.25 | 655.25 |
| 1,540 | 655.25 | 655.25 | 655.25 | 655.25 | 655.25 |
| 1,545 | 655.25 | 655.25 | 655.25 | 655.25 | 655.25 |
| 1,550 | 655.25 | 655.25 | 655.25 | 655.25 | 655.25 |
| 1,555 | 655.25 | 655.25 | 655.25 | 655.25 | 655.25 |
| 1,560 | 655.25 | 655.25 | 655.25 | 655.25 | 655.25 |
| 1,565 | 655.25 | 655.25 | 655.25 | 655.25 | 655.25 |
| 1,570 | 655.25 | 655.25 | 655.25 | 655.25 | 655.25 |
| 1,575 | 655.25 | 655.25 | 655.25 | 655.25 | 655.25 |
| 1,580 | 655.25 | 655.25 | 655.25 | 655.25 | 655.25 |
| 1,585 | 655.25 | 655.25 | 655.25 | 655.25 | 655.25 |
| 1,590 | 655.25 | 655.25 | 655.25 | 655.25 | 655.25 |
| 1,595 | 655.25 | 655.25 | 655.25 | 655.25 | 655.25 |
| 1,600 | 655.25 | 655.25 | 655.25 | 655.25 | 655.25 |
| 1,605 | 655.25 | 655.25 | 655.25 | 655.25 | 655.25 |
| 1,610 | 655.25 | 655.25 | 655.25 | 655.25 | 655.25 |
| 1,615 | 655.25 | 655.25 | 655.25 | 655.25 | 655.25 |
| 1,620 | 655.25 | 655.25 | 655.25 | 655.25 | 655.25 |
| 1,625 | 655.25 | 655.25 | 655.25 | 655.25 | 655.25 |
| 1,630 | 655.25 | 655.25 | 655.25 | 655.25 | 655.25 |

# Basin 3I Drawdown

Subsection: Time vs. Elevation
Label: 1 (OUT)
Scenario: Drawdown

Return Event: 100 years
Storm Event:

**Time vs. Elevation (ft)**

**Output Time increment = 1 min**
**Time on left represents time for first value in each row.**

| Time (min) | Elevation (ft) | Elevation (ft) | Elevation (ft) | Elevation (ft) | Elevation (ft) |
|---|---|---|---|---|---|
| 1,635 | 655.25 | 655.25 | 655.25 | 655.25 | 655.25 |
| 1,640 | 655.25 | 655.25 | 655.25 | 655.25 | 655.25 |
| 1,645 | 655.25 | 655.25 | 655.25 | 655.25 | 655.25 |
| 1,650 | 655.25 | 655.25 | 655.25 | 655.25 | 655.25 |
| 1,655 | 655.25 | 655.25 | 655.25 | 655.25 | 655.25 |
| 1,660 | 655.25 | 655.25 | 655.25 | 655.25 | 655.25 |
| 1,665 | 655.25 | 655.25 | 655.25 | 655.25 | 655.25 |
| 1,670 | 655.25 | 655.25 | 655.25 | 655.25 | 655.25 |
| 1,675 | 655.25 | 655.25 | 655.25 | 655.25 | 655.25 |
| 1,680 | 655.25 | 655.25 | 655.25 | 655.25 | 655.25 |
| 1,685 | 655.25 | 655.25 | 655.25 | 655.25 | 655.25 |
| 1,690 | 655.25 | 655.25 | 655.25 | 655.25 | 655.25 |
| 1,695 | 655.25 | 655.25 | 655.25 | 655.25 | 655.25 |
| 1,700 | 655.25 | 655.25 | 655.25 | 655.25 | 655.25 |
| 1,705 | 655.25 | 655.25 | 655.25 | 655.25 | 655.25 |
| 1,710 | 655.25 | 655.25 | 655.25 | 655.25 | 655.25 |
| 1,715 | 655.25 | 655.25 | 655.25 | 655.25 | 655.25 |
| 1,720 | 655.25 | 655.25 | 655.25 | 655.25 | 655.25 |
| 1,725 | 655.25 | 655.25 | 655.25 | 655.25 | 655.25 |
| 1,730 | 655.25 | 655.25 | 655.25 | 655.25 | 655.25 |
| 1,735 | 655.25 | 655.25 | 655.25 | 655.25 | 655.25 |
| 1,740 | 655.25 | 655.25 | 655.25 | 655.25 | 655.25 |
| 1,745 | 655.25 | 655.25 | 655.25 | 655.25 | 655.25 |
| 1,750 | 655.25 | 655.25 | 655.25 | 655.25 | 655.25 |
| 1,755 | 655.25 | 655.25 | 655.25 | 655.25 | 655.25 |
| 1,760 | 655.25 | 655.25 | 655.25 | 655.25 | 655.25 |
| 1,765 | 655.25 | 655.25 | 655.25 | 655.25 | 655.25 |
| 1,770 | 655.25 | 655.25 | 655.25 | 655.25 | 655.25 |
| 1,775 | 655.25 | 655.25 | 655.25 | 655.25 | 655.25 |
| 1,780 | 655.25 | 655.25 | 655.25 | 655.25 | 655.25 |
| 1,785 | 655.25 | 655.25 | 655.25 | 655.25 | 655.25 |
| 1,790 | 655.25 | 655.25 | 655.25 | 655.25 | 655.25 |
| 1,795 | 655.25 | 655.25 | 655.25 | 655.25 | 655.25 |
| 1,800 | 655.25 | 655.25 | 655.25 | 655.25 | 655.25 |
| 1,805 | 655.25 | 655.25 | 655.25 | 655.25 | 655.25 |
| 1,810 | 655.25 | 655.25 | 655.25 | 655.25 | 655.25 |
| 1,815 | 655.25 | 655.25 | 655.25 | 655.25 | 655.25 |
| 1,820 | 655.25 | 655.25 | 655.25 | 655.25 | 655.25 |
| 1,825 | 655.25 | 655.25 | 655.25 | 655.25 | 655.25 |
| 1,830 | 655.25 | 655.25 | 655.25 | 655.25 | 655.25 |
| 1,835 | 655.25 | 655.25 | 655.25 | 655.25 | 655.25 |

# Basin 3I Drawdown

Subsection: Time vs. Elevation
Label: 1 (OUT)
Scenario: Drawdown

Return Event: 100 years
Storm Event:

**Time vs. Elevation (ft)**

**Output Time increment = 1 min**
**Time on left represents time for first value in each row.**

| Time (min) | Elevation (ft) | Elevation (ft) | Elevation (ft) | Elevation (ft) | Elevation (ft) |
|---|---|---|---|---|---|
| 1,840 | 655.25 | 655.25 | 655.25 | 655.25 | 655.25 |
| 1,845 | 655.25 | 655.25 | 655.25 | 655.25 | 655.25 |
| 1,850 | 655.25 | 655.25 | 655.25 | 655.25 | 655.25 |
| 1,855 | 655.25 | 655.25 | 655.25 | 655.25 | 655.25 |
| 1,860 | 655.25 | 655.25 | 655.25 | 655.25 | 655.25 |
| 1,865 | 655.25 | 655.25 | 655.25 | 655.25 | 655.25 |
| 1,870 | 655.25 | 655.25 | 655.25 | 655.25 | 655.25 |
| 1,875 | 655.25 | 655.25 | 655.25 | 655.25 | 655.25 |
| 1,880 | 655.25 | 655.25 | 655.25 | 655.25 | 655.25 |
| 1,885 | 655.25 | 655.25 | 655.25 | 655.25 | 655.25 |
| 1,890 | 655.25 | 655.25 | 655.25 | 655.25 | 655.25 |
| 1,895 | 655.25 | 655.25 | 655.25 | 655.25 | 655.25 |
| 1,900 | 655.25 | 655.25 | 655.25 | 655.25 | 655.25 |
| 1,905 | 655.25 | 655.25 | 655.25 | 655.25 | 655.25 |
| 1,910 | 655.25 | 655.25 | 655.25 | 655.25 | 655.25 |
| 1,915 | 655.25 | 655.25 | 655.25 | 655.25 | 655.25 |
| 1,920 | 655.25 | 655.25 | 655.25 | 655.25 | 655.25 |
| 1,925 | 655.25 | 655.25 | 655.25 | 655.25 | 655.25 |
| 1,930 | 655.25 | 655.25 | 655.25 | 655.25 | 655.25 |
| 1,935 | 655.25 | 655.25 | 655.25 | 655.25 | 655.25 |
| 1,940 | 655.25 | 655.25 | 655.25 | 655.25 | 655.25 |
| 1,945 | 655.25 | 655.25 | 655.25 | 655.25 | 655.25 |
| 1,950 | 655.25 | 655.25 | 655.25 | 655.25 | 655.25 |
| 1,955 | 655.25 | 655.25 | 655.25 | 655.25 | 655.25 |
| 1,960 | 655.25 | 655.25 | 655.25 | 655.25 | 655.25 |
| 1,965 | 655.25 | 655.25 | 655.25 | 655.25 | 655.25 |
| 1,970 | 655.25 | 655.25 | 655.25 | 655.25 | 655.25 |
| 1,975 | 655.25 | 655.25 | 655.25 | 655.25 | 655.25 |
| 1,980 | 655.25 | 655.25 | 655.25 | 655.25 | 655.25 |
| 1,985 | 655.25 | 655.25 | 655.25 | 655.25 | 655.25 |
| 1,990 | 655.25 | 655.25 | 655.25 | 655.25 | 655.25 |
| 1,995 | 655.25 | 655.25 | 655.25 | 655.25 | 655.25 |
| 2,000 | 655.25 | (N/A) | (N/A) | (N/A) | (N/A) |

# Basin 3I Drawdown

Subsection: Outlet Input Data
Label: Outlet#1- w/ Underdrain
Scenario: Drawdown

Return Event: 100 years
Storm Event:

| Requested Pond Water Surface Elevations | |
|---|---|
| Minimum (Headwater) | 655.00 ft |
| Increment (Headwater) | 0.10 ft |
| Maximum (Headwater) | 663.00 ft |

## Outlet Connectivity

| Structure Type | Outlet ID | Direction | Outfall | E1 (ft) | E2 (ft) |
|---|---|---|---|---|---|
| Orifice-Circular | Orifice - 1 | Forward | TW | 658.75 | 663.00 |
| Orifice-Circular | Orifice - 3 | Forward | TW | 660.25 | 663.00 |
| Inlet Box | Riser - Mod Type G3 | Forward | TW | 661.50 | 663.00 |
| Orifice-Circular | Orifice - Underdrain | Forward | TW | 655.25 | 663.00 |
| Tailwater Settings | Tailwater | | | (N/A) | (N/A) |

# Basin 3I Drawdown

Subsection: Outlet Input Data
Label: Outlet#1- w/ Underdrain
Scenario: Drawdown

Return Event: 100 years
Storm Event:

| Structure ID: Riser - Mod Type G3<br>Structure Type: Inlet Box | |
|---|---|
| Number of Openings | 1 |
| Elevation | 661.50 ft |
| Orifice Area | 12.1 ft² |
| Orifice Coefficient | 0.600 |
| Weir Length | 15.60 ft |
| Weir Coefficient | 3.00 (ft^0.5)/s |
| K Reverse | 1.000 |
| Manning's n | 0.000 |
| Kev, Charged Riser | 0.000 |
| Weir Submergence | False |
| Orifice H to crest | True |

| Structure ID: Orifice - 1<br>Structure Type: Orifice-Circular | |
|---|---|
| Number of Openings | 1 |
| Elevation | 658.75 ft |
| Orifice Diameter | 5.0 in |
| Orifice Coefficient | 0.600 |

| Structure ID: Orifice - Underdrain<br>Structure Type: Orifice-Circular | |
|---|---|
| Number of Openings | 1 |
| Elevation | 655.25 ft |
| Orifice Diameter | 4.0 in |
| Orifice Coefficient | 0.600 |

| Structure ID: Orifice - 3<br>Structure Type: Orifice-Circular | |
|---|---|
| Number of Openings | 1 |
| Elevation | 660.25 ft |
| Orifice Diameter | 4.0 in |
| Orifice Coefficient | 0.600 |

| Structure ID: TW<br>Structure Type: TW Setup, DS Channel | |
|---|---|
| Tailwater Type | Free Outfall |

| Convergence Tolerances | |
|---|---|
| Maximum Iterations | 80 |

# Basin 3I Drawdown

Subsection: Outlet Input Data
Label: Outlet#1- w/ Underdrain
Scenario: Drawdown

Return Event: 100 years
Storm Event:

| Convergence Tolerances | |
|---|---|
| Tailwater Tolerance (Minimum) | 0.01 ft |
| Tailwater Tolerance (Maximum) | 0.10 ft |
| Headwater Tolerance (Minimum) | 0.01 ft |
| Headwater Tolerance (Maximum) | 0.10 ft |
| Flow Tolerance (Minimum) | 0.001 ft³/s |
| Flow Tolerance (Maximum) | 10.000 ft³/s |

# Basin 3I Drawdown

Subsection: Elevation-Volume-Flow Table (Pond)
Label: 1
Scenario: Drawdown

Return Event: 100 years
Storm Event:

| Infiltration | |
|---|---|
| Infiltration Method (Computed) | No Infiltration |

| Initial Conditions | |
|---|---|
| Elevation (Water Surface, Initial) | 661.50 ft |
| Volume (Initial) | 0.388 ac-ft |
| Flow (Initial Outlet) | 2.52 ft³/s |
| Flow (Initial Infiltration) | 0.00 ft³/s |
| Flow (Initial, Total) | 2.52 ft³/s |
| Time Increment | 1 min |

| Elevation (ft) | Outflow (ft³/s) | Storage (ac-ft) | Area (ft²) | Infiltration (ft³/s) | Flow (Total) (ft³/s) | 2S/t + O (ft³/s) |
|---|---|---|---|---|---|---|
| 655.00 | 0.00 | 0.000 | 10.000 | 0.00 | 0.00 | 0.00 |
| 655.10 | 0.00 | 0.000 | 10.000 | 0.00 | 0.00 | 0.03 |
| 655.20 | 0.00 | 0.000 | 10.000 | 0.00 | 0.00 | 0.07 |
| 655.25 | 0.00 | 0.000 | 10.000 | 0.00 | 0.00 | 0.08 |
| 655.30 | 0.00 | 0.000 | 10.000 | 0.00 | 0.00 | 0.10 |
| 655.40 | 0.04 | 0.000 | 10.000 | 0.00 | 0.04 | 0.17 |
| 655.50 | 0.10 | 0.000 | 10.000 | 0.00 | 0.10 | 0.27 |
| 655.60 | 0.18 | 0.000 | 10.000 | 0.00 | 0.18 | 0.38 |
| 655.70 | 0.22 | 0.000 | 10.000 | 0.00 | 0.22 | 0.46 |
| 655.80 | 0.26 | 0.000 | 10.000 | 0.00 | 0.26 | 0.53 |
| 655.90 | 0.29 | 0.000 | 10.000 | 0.00 | 0.29 | 0.59 |
| 656.00 | 0.32 | 0.000 | 10.000 | 0.00 | 0.32 | 0.65 |
| 656.10 | 0.35 | 0.000 | 10.000 | 0.00 | 0.35 | 0.71 |
| 656.20 | 0.37 | 0.000 | 10.000 | 0.00 | 0.37 | 0.77 |
| 656.30 | 0.39 | 0.000 | 10.000 | 0.00 | 0.39 | 0.83 |
| 656.40 | 0.42 | 0.000 | 10.000 | 0.00 | 0.42 | 0.88 |
| 656.50 | 0.44 | 0.000 | 10.000 | 0.00 | 0.44 | 0.94 |
| 656.60 | 0.46 | 0.000 | 10.000 | 0.00 | 0.46 | 0.99 |
| 656.70 | 0.48 | 0.000 | 10.000 | 0.00 | 0.48 | 1.04 |
| 656.80 | 0.49 | 0.000 | 10.000 | 0.00 | 0.49 | 1.09 |
| 656.90 | 0.51 | 0.000 | 10.000 | 0.00 | 0.51 | 1.14 |
| 657.00 | 0.53 | 0.000 | 10.000 | 0.00 | 0.53 | 1.20 |
| 657.10 | 0.54 | 0.000 | 10.000 | 0.00 | 0.54 | 1.24 |
| 657.20 | 0.56 | 0.001 | 10.000 | 0.00 | 0.56 | 1.29 |
| 657.30 | 0.58 | 0.001 | 10.000 | 0.00 | 0.58 | 1.34 |
| 657.40 | 0.59 | 0.001 | 10.000 | 0.00 | 0.59 | 1.39 |
| 657.50 | 0.61 | 0.001 | 10.000 | 0.00 | 0.61 | 1.44 |
| 657.60 | 0.62 | 0.001 | 10.000 | 0.00 | 0.62 | 1.49 |
| 657.70 | 0.63 | 0.001 | 10.000 | 0.00 | 0.63 | 1.53 |

# Basin 3I Drawdown

Subsection: Elevation-Volume-Flow Table (Pond) Return Event: 100 years
Label: 1 Storm Event:
Scenario: Drawdown

| Elevation (ft) | Outflow (ft³/s) | Storage (ac-ft) | Area (ft²) | Infiltration (ft³/s) | Flow (Total) (ft³/s) | 2S/t + O (ft³/s) |
|---|---|---|---|---|---|---|
| 657.80 | 0.65 | 0.001 | 10.000 | 0.00 | 0.65 | 1.58 |
| 657.90 | 0.66 | 0.001 | 10.000 | 0.00 | 0.66 | 1.63 |
| 658.00 | 0.68 | 0.001 | 2,991.500 | 0.00 | 0.68 | 2.02 |
| 658.10 | 0.69 | 0.008 | 3,085.207 | 0.00 | 0.69 | 12.16 |
| 658.20 | 0.70 | 0.015 | 3,180.359 | 0.00 | 0.70 | 22.62 |
| 658.30 | 0.71 | 0.023 | 3,276.956 | 0.00 | 0.71 | 33.39 |
| 658.40 | 0.73 | 0.030 | 3,374.999 | 0.00 | 0.73 | 44.49 |
| 658.50 | 0.74 | 0.038 | 3,474.486 | 0.00 | 0.74 | 55.92 |
| 658.60 | 0.75 | 0.046 | 3,575.419 | 0.00 | 0.75 | 67.68 |
| 658.70 | 0.76 | 0.054 | 3,677.796 | 0.00 | 0.76 | 79.78 |
| 658.75 | 0.77 | 0.059 | 3,729.527 | 0.00 | 0.77 | 85.96 |
| 658.80 | 0.78 | 0.063 | 3,781.619 | 0.00 | 0.78 | 92.23 |
| 658.90 | 0.83 | 0.072 | 3,886.887 | 0.00 | 0.83 | 105.06 |
| 659.00 | 0.91 | 0.081 | 3,993.600 | 0.00 | 0.91 | 118.28 |
| 659.10 | 1.02 | 0.090 | 4,094.244 | 0.00 | 1.02 | 131.87 |
| 659.20 | 1.14 | 0.100 | 4,196.140 | 0.00 | 1.14 | 145.80 |
| 659.30 | 1.21 | 0.109 | 4,299.289 | 0.00 | 1.21 | 160.03 |
| 659.40 | 1.27 | 0.119 | 4,403.691 | 0.00 | 1.27 | 174.60 |
| 659.50 | 1.33 | 0.130 | 4,509.344 | 0.00 | 1.33 | 189.51 |
| 659.60 | 1.38 | 0.140 | 4,616.251 | 0.00 | 1.38 | 204.77 |
| 659.70 | 1.43 | 0.151 | 4,724.409 | 0.00 | 1.43 | 220.39 |
| 659.80 | 1.48 | 0.162 | 4,833.820 | 0.00 | 1.48 | 236.37 |
| 659.90 | 1.53 | 0.173 | 4,944.484 | 0.00 | 1.53 | 252.71 |
| 660.00 | 1.57 | 0.184 | 5,056.400 | 0.00 | 1.57 | 269.42 |
| 660.10 | 1.61 | 0.196 | 5,164.039 | 0.00 | 1.61 | 286.50 |
| 660.20 | 1.65 | 0.208 | 5,272.811 | 0.00 | 1.65 | 303.93 |
| 660.25 | 1.67 | 0.214 | 5,327.622 | 0.00 | 1.67 | 312.78 |
| 660.30 | 1.69 | 0.220 | 5,382.717 | 0.00 | 1.69 | 321.73 |
| 660.40 | 1.77 | 0.233 | 5,493.756 | 0.00 | 1.77 | 339.93 |
| 660.50 | 1.86 | 0.246 | 5,605.929 | 0.00 | 1.86 | 358.53 |
| 660.60 | 1.98 | 0.259 | 5,719.236 | 0.00 | 1.98 | 377.52 |
| 660.70 | 2.06 | 0.272 | 5,833.677 | 0.00 | 2.06 | 396.85 |
| 660.80 | 2.13 | 0.285 | 5,949.251 | 0.00 | 2.13 | 416.56 |
| 660.90 | 2.19 | 0.299 | 6,065.959 | 0.00 | 2.19 | 436.65 |
| 661.00 | 2.25 | 0.313 | 6,183.800 | 0.00 | 2.25 | 457.12 |
| 661.10 | 2.31 | 0.328 | 6,298.257 | 0.00 | 2.31 | 477.99 |
| 661.20 | 2.36 | 0.342 | 6,413.764 | 0.00 | 2.36 | 499.23 |
| 661.30 | 2.42 | 0.357 | 6,530.320 | 0.00 | 2.42 | 520.85 |
| 661.40 | 2.47 | 0.372 | 6,647.925 | 0.00 | 2.47 | 542.87 |
| 661.50 | 2.52 | 0.388 | 6,766.580 | 0.00 | 2.52 | 565.28 |
| 661.60 | 4.05 | 0.403 | 6,886.285 | 0.00 | 4.05 | 589.56 |
| 661.70 | 6.80 | 0.419 | 7,007.040 | 0.00 | 6.80 | 615.47 |
| 661.80 | 10.35 | 0.435 | 7,128.844 | 0.00 | 10.35 | 642.58 |

# Basin 3I Drawdown

Subsection: Elevation-Volume-Flow Table (Pond) Return Event: 100 years
Label: 1 Storm Event:
Scenario: Drawdown

| Elevation (ft) | Outflow (ft³/s) | Storage (ac-ft) | Area (ft²) | Infiltration (ft³/s) | Flow (Total) (ft³/s) | 2S/t + O (ft³/s) |
|---|---|---|---|---|---|---|
| 661.90 | 14.55 | 0.452 | 7,251.697 | 0.00 | 14.55 | 670.74 |
| 662.00 | 19.30 | 0.469 | 7,375.600 | 0.00 | 19.30 | 699.87 |
| 662.10 | 24.54 | 0.486 | 7,496.740 | 0.00 | 24.54 | 729.90 |
| 662.20 | 30.25 | 0.503 | 7,618.866 | 0.00 | 30.25 | 760.80 |
| 662.30 | 36.37 | 0.521 | 7,741.979 | 0.00 | 36.37 | 792.52 |
| 662.40 | 42.88 | 0.539 | 7,866.079 | 0.00 | 42.88 | 825.04 |
| 662.50 | 49.76 | 0.557 | 7,991.166 | 0.00 | 49.76 | 858.35 |
| 662.60 | 56.99 | 0.575 | 8,117.239 | 0.00 | 56.99 | 892.43 |
| 662.70 | 64.56 | 0.594 | 8,244.299 | 0.00 | 64.56 | 927.27 |
| 662.80 | 69.48 | 0.613 | 8,372.346 | 0.00 | 69.48 | 959.88 |
| 662.90 | 72.02 | 0.633 | 8,501.380 | 0.00 | 72.02 | 990.55 |
| 663.00 | 74.48 | 0.652 | 8,631.400 | 0.00 | 74.48 | 1,021.56 |

# Basin 3I Drawdown

## Index

1

1 (Elevation-Volume-Flow Table (Pond))...

1 (Elevation-Volume-Flow Table (Pond), 100 years (Drawdown))...14, 15, 16

1 (OUT) (Time vs. Elevation)...

1 (OUT) (Time vs. Elevation, 100 years (Drawdown))...1, 2, 3, 4, 5, 6, 7, 8, 9, 10

O

Outlet#1- w/ Underdrain (Outlet Input Data)...

Outlet#1- w/ Underdrain (Outlet Input Data, 100 years (Drawdown))...11, 12, 13

# Attachment 9

# POC 2H Exemption Calculations

```
************************************************************************

          RATIONAL METHOD HYDROLOGY COMPUTER PROGRAM PACKAGE
          Reference: SAN DIEGO COUNTY FLOOD CONTROL DISTRICT
                       2003,1985,1981 HYDROLOGY MANUAL
        (c) Copyright 1982-2016 Advanced Engineering Software (aes)
            Ver. 23.0 Release Date: 07/01/2016  License ID 1509

                          Analysis prepared by:




 ************************** DESCRIPTION OF STUDY **************************
* OBR PROPOSED CONDITIONS                                                 *
* SYSTEM 4106 10 YEAR UNMITIGATED                                         *
* SOUTHWEST QUADRANT                                                      *
 ************************************************************************

  FILE NAME: 4016P100.DAT
  TIME/DATE OF STUDY: 09:40 10/31/2024
------------------------------------------------------------------------
  USER SPECIFIED HYDROLOGY AND HYDRAULIC MODEL INFORMATION:
------------------------------------------------------------------------
  2003 SAN DIEGO MANUAL CRITERIA

  USER SPECIFIED STORM EVENT(YEAR) =  10.00
  6-HOUR DURATION PRECIPITATION (INCHES) =   2.200
  SPECIFIED MINIMUM PIPE SIZE(INCH) =  18.00
  SPECIFIED PERCENT OF GRADIENTS(DECIMAL) TO USE FOR FRICTION SLOPE = 0.95
  SAN DIEGO HYDROLOGY MANUAL "C"-VALUES USED FOR RATIONAL METHOD
  NOTE: USE MODIFIED RATIONAL METHOD PROCEDURES FOR CONFLUENCE ANALYSIS
  *USER-DEFINED STREET-SECTIONS FOR COUPLED PIPEFLOW AND STREETFLOW MODEL*
     HALF-  CROWN TO   STREET-CROSSFALL:   CURB  GUTTER-GEOMETRIES:  MANNING
     WIDTH  CROSSFALL  IN-  / OUT-/PARK-  HEIGHT  WIDTH  LIP   HIKE  FACTOR
NO.   (FT)     (FT)    SIDE / SIDE/ WAY    (FT)    (FT)  (FT)  (FT)    (n)
===  =====  =========  ==================  ======  =====  ====  =====  =======
  1   30.0     20.0    0.018/0.018/0.020   0.67    2.00 0.0312 0.167 0.0150
  2   20.0     12.0    0.020/0.020/0.020   0.50    1.50 0.0312 0.125 0.0150

  GLOBAL STREET FLOW-DEPTH CONSTRAINTS:
    1. Relative Flow-Depth =  1.00 FEET
       as (Maximum Allowable Street Flow Depth) - (Top-of-Curb)
    2. (Depth)*(Velocity) Constraint =  6.0 (FT*FT/S)
  *SIZE PIPE WITH A FLOW CAPACITY GREATER THAN
   OR EQUAL TO THE UPSTREAM TRIBUTARY PIPE.*

************************************************************************
  FLOW PROCESS FROM NODE   4008.00 TO NODE   4009.00 IS CODE =  21
------------------------------------------------------------------------
  >>>>>RATIONAL METHOD INITIAL SUBAREA ANALYSIS<<<<<
========================================================================
  NATURAL DESERT LANDSCAPING RUNOFF COEFFICIENT = .3000
  SOIL CLASSIFICATION IS "C"
  S.C.S. CURVE NUMBER (AMC II) =  85
  INITIAL SUBAREA FLOW-LENGTH(FEET) =   100.00
  UPSTREAM ELEVATION(FEET) =    358.09
  DOWNSTREAM ELEVATION(FEET) =    340.00
  ELEVATION DIFFERENCE(FEET) =     18.09
  SUBAREA OVERLAND TIME OF FLOW(MIN.) =    6.684
```





```
  WARNING: THE MAXIMUM OVERLAND FLOW SLOPE, 10.%, IS USED IN Tc CALCULATION!
    10 YEAR RAINFALL INTENSITY(INCH/HOUR) =  4.807
  SUBAREA RUNOFF(CFS) =      0.39
  TOTAL AREA(ACRES) =      0.27   TOTAL RUNOFF(CFS) =      0.39

************************************************************************
  FLOW PROCESS FROM NODE   4009.00 TO NODE   4010.00 IS CODE =  51
------------------------------------------------------------------------
  >>>>>COMPUTE TRAPEZOIDAL CHANNEL FLOW<<<<<
  >>>>>TRAVELTIME THRU SUBAREA (EXISTING ELEMENT)<<<<<
========================================================================
  ELEVATION DATA: UPSTREAM(FEET) =    340.00  DOWNSTREAM(FEET) =    201.00
  CHANNEL LENGTH THRU SUBAREA(FEET) =   645.00   CHANNEL SLOPE =  0.2155
  CHANNEL BASE(FEET) =   10.00   "Z" FACTOR =   5.000
  MANNING'S FACTOR = 0.045   MAXIMUM DEPTH(FEET) =   2.00
    10 YEAR RAINFALL INTENSITY(INCH/HOUR) =  3.634
  NATURAL DESERT LANDSCAPING RUNOFF COEFFICIENT = .3000
  SOIL CLASSIFICATION IS "C"
  S.C.S. CURVE NUMBER (AMC II) =  85
  TRAVEL TIME COMPUTED USING ESTIMATED FLOW(CFS) =       2.68
  TRAVEL TIME THRU SUBAREA BASED ON VELOCITY(FEET/SEC.) =   2.96
  AVERAGE FLOW DEPTH(FEET) =   0.09   TRAVEL TIME(MIN.) =   3.63
  Tc(MIN.) =   10.31
  SUBAREA AREA(ACRES) =     4.15       SUBAREA RUNOFF(CFS) =     4.52
  AREA-AVERAGE RUNOFF COEFFICIENT =  0.300
  TOTAL AREA(ACRES) =        4.4         PEAK FLOW RATE(CFS) =       4.82

  END OF SUBAREA CHANNEL FLOW HYDRAULICS:
  DEPTH(FEET) =  0.12   FLOW VELOCITY(FEET/SEC.) =   3.63
  LONGEST FLOWPATH FROM NODE   4008.00 TO NODE   4010.00 =     745.00 FEET.

************************************************************************
  FLOW PROCESS FROM NODE   4024.00 TO NODE   4010.00 IS CODE =  81
------------------------------------------------------------------------
  >>>>>ADDITION OF SUBAREA TO MAINLINE PEAK FLOW<<<<<
========================================================================
    10 YEAR RAINFALL INTENSITY(INCH/HOUR) =  3.634
  *USER SPECIFIED(SUBAREA):
  NATURAL DESERT LANDSCAPING RUNOFF COEFFICIENT = .3100
  S.C.S. CURVE NUMBER (AMC II) =  85
  AREA-AVERAGE RUNOFF COEFFICIENT = 0.3020
  SUBAREA AREA(ACRES) =    1.12   SUBAREA RUNOFF(CFS) =    1.26
  TOTAL AREA(ACRES) =        5.5   TOTAL RUNOFF(CFS) =       6.08
  TC(MIN.) =   10.31

************************************************************************
  FLOW PROCESS FROM NODE   4009.00 TO NODE   4010.00 IS CODE =   1
------------------------------------------------------------------------
  >>>>>DESIGNATE INDEPENDENT STREAM FOR CONFLUENCE<<<<<
========================================================================
  TOTAL NUMBER OF STREAMS =  2
  CONFLUENCE VALUES USED FOR INDEPENDENT STREAM  1 ARE:
  TIME OF CONCENTRATION(MIN.) =   10.31
  RAINFALL INTENSITY(INCH/HR) =   3.63
  TOTAL STREAM AREA(ACRES) =     5.54
  PEAK FLOW RATE(CFS) AT CONFLUENCE =      6.08

************************************************************************
  FLOW PROCESS FROM NODE   4075.00 TO NODE   4076.00 IS CODE =  21
------------------------------------------------------------------------
  >>>>>RATIONAL METHOD INITIAL SUBAREA ANALYSIS<<<<<
========================================================================
  STREETS & ROADS (CURBS/STORM DRAINS) RUNOFF COEFFICIENT = .8700
```

```
  SOIL CLASSIFICATION IS "D"
  S.C.S. CURVE NUMBER (AMC II) =  98
  INITIAL SUBAREA FLOW-LENGTH(FEET) =    48.00
  UPSTREAM ELEVATION(FEET) =    214.00
  DOWNSTREAM ELEVATION(FEET) =    211.00
  ELEVATION DIFFERENCE(FEET) =      3.00
  SUBAREA OVERLAND TIME OF FLOW(MIN.) =    1.557
    10 YEAR RAINFALL INTENSITY(INCH/HOUR) =  5.796
  NOTE: RAINFALL INTENSITY IS BASED ON Tc = 5-MINUTE.
  SUBAREA RUNOFF(CFS) =      0.10
  TOTAL AREA(ACRES) =      0.02   TOTAL RUNOFF(CFS) =      0.10

****************************************************************************
  FLOW PROCESS FROM NODE   4076.00 TO NODE   4010.00 IS CODE =  62
----------------------------------------------------------------------------
  >>>>>COMPUTE STREET FLOW TRAVEL TIME THRU SUBAREA<<<<<
  >>>>>(STREET TABLE SECTION #  2 USED)<<<<<
============================================================================
  UPSTREAM ELEVATION(FEET) =  211.00  DOWNSTREAM ELEVATION(FEET) =  200.00
  STREET LENGTH(FEET) =   222.00   CURB HEIGHT(INCHES) =  6.0
  STREET HALFWIDTH(FEET) = 20.00

  DISTANCE FROM CROWN TO CROSSFALL GRADEBREAK(FEET) =  12.00
  INSIDE STREET CROSSFALL(DECIMAL) =  0.020
  OUTSIDE STREET CROSSFALL(DECIMAL)  =  0.020

  SPECIFIED NUMBER OF HALFSTREETS CARRYING RUNOFF =  1
  STREET PARKWAY CROSSFALL(DECIMAL)  =  0.020
  Manning's FRICTION FACTOR for Streetflow Section(curb-to-curb) =   0.0150
  Manning's FRICTION FACTOR for Back-of-Walk Flow Section =   0.0300

    **TRAVEL TIME COMPUTED USING ESTIMATED FLOW(CFS) =       0.30
    STREETFLOW MODEL RESULTS USING ESTIMATED FLOW:
    STREET FLOW DEPTH(FEET) =  0.16
    HALFSTREET FLOOD WIDTH(FEET) =    1.50
    AVERAGE FLOW VELOCITY(FEET/SEC.) =    4.19
    PRODUCT OF DEPTH&VELOCITY(FT*FT/SEC.) =    0.66
  STREET FLOW TRAVEL TIME(MIN.) =   0.88   Tc(MIN.) =    2.44
    10 YEAR RAINFALL INTENSITY(INCH/HOUR) =  5.796
  NOTE: RAINFALL INTENSITY IS BASED ON Tc = 5-MINUTE.
  STREETS & ROADS (CURBS/STORM DRAINS) RUNOFF COEFFICIENT = .8700
  SOIL CLASSIFICATION IS "D"
  S.C.S. CURVE NUMBER (AMC II) =  98
  AREA-AVERAGE RUNOFF COEFFICIENT =  0.870
  SUBAREA AREA(ACRES) =    0.08      SUBAREA RUNOFF(CFS) =    0.40
  TOTAL AREA(ACRES) =        0.1        PEAK FLOW RATE(CFS) =       0.50

  END OF SUBAREA STREET FLOW HYDRAULICS:
  DEPTH(FEET) = 0.16   HALFSTREET FLOOD WIDTH(FEET) =   1.50
  FLOW VELOCITY(FEET/SEC.) =  4.19   DEPTH*VELOCITY(FT*FT/SEC.) =   0.66
  LONGEST FLOWPATH FROM NODE   4075.00 TO NODE   4010.00 =     270.00 FEET.

****************************************************************************
  FLOW PROCESS FROM NODE   4076.00 TO NODE   4010.00 IS CODE =   1
----------------------------------------------------------------------------
  >>>>>DESIGNATE INDEPENDENT STREAM FOR CONFLUENCE<<<<<
  >>>>>AND COMPUTE VARIOUS CONFLUENCED STREAM VALUES<<<<<
============================================================================
  TOTAL NUMBER OF STREAMS =  2
  CONFLUENCE VALUES USED FOR INDEPENDENT STREAM  2 ARE:
  TIME OF CONCENTRATION(MIN.) =    2.44
  RAINFALL INTENSITY(INCH/HR) =   5.80
  TOTAL STREAM AREA(ACRES) =     0.10
```





```
  PEAK FLOW RATE(CFS) AT CONFLUENCE =      0.50

  ** CONFLUENCE DATA **
  STREAM     RUNOFF       Tc       INTENSITY      AREA
  NUMBER      (CFS)     (MIN.)   (INCH/HOUR)    (ACRE)
      1        6.08    10.31        3.634          5.54
      2        0.50     2.44        5.796          0.10

  RAINFALL INTENSITY AND TIME OF CONCENTRATION RATIO
  CONFLUENCE FORMULA USED FOR  2 STREAMS.

  ** PEAK FLOW RATE TABLE **
  STREAM     RUNOFF       Tc      INTENSITY
  NUMBER      (CFS)     (MIN.)   (INCH/HOUR)
      1        1.94     2.44        5.796
      2        6.40    10.31        3.634

  COMPUTED CONFLUENCE ESTIMATES ARE AS FOLLOWS:
  PEAK FLOW RATE(CFS) =       6.40   Tc(MIN.) =   10.31
  TOTAL AREA(ACRES) =        5.6
  LONGEST FLOWPATH FROM NODE   4008.00 TO NODE   4010.00 =     745.00 FEET.

****************************************************************************
  FLOW PROCESS FROM NODE   4010.00 TO NODE   4007.00 IS CODE =  31
----------------------------------------------------------------------------
  >>>>>COMPUTE PIPE-FLOW TRAVEL TIME THRU SUBAREA<<<<<
  >>>>>USING COMPUTER-ESTIMATED PIPESIZE (NON-PRESSURE FLOW)<<<<<
============================================================================
  ELEVATION DATA: UPSTREAM(FEET) =   191.02  DOWNSTREAM(FEET) =   187.70
  FLOW LENGTH(FEET) =    82.88   MANNING'S N =  0.013
  ESTIMATED PIPE DIAMETER(INCH) INCREASED TO 18.000
  DEPTH OF FLOW IN  18.0 INCH PIPE IS   6.9 INCHES
  PIPE-FLOW VELOCITY(FEET/SEC.) =  10.24
  ESTIMATED PIPE DIAMETER(INCH) =  18.00    NUMBER OF PIPES =   1
  PIPE-FLOW(CFS) =       6.40
  PIPE TRAVEL TIME(MIN.) =   0.13    Tc(MIN.) =   10.45
  LONGEST FLOWPATH FROM NODE   4008.00 TO NODE   4007.00 =     827.88 FEET.

****************************************************************************
  FLOW PROCESS FROM NODE   4010.00 TO NODE   4007.00 IS CODE =   1
----------------------------------------------------------------------------
  >>>>>DESIGNATE INDEPENDENT STREAM FOR CONFLUENCE<<<<<
============================================================================
  TOTAL NUMBER OF STREAMS =  2
  CONFLUENCE VALUES USED FOR INDEPENDENT STREAM  1 ARE:
  TIME OF CONCENTRATION(MIN.) =   10.45
  RAINFALL INTENSITY(INCH/HR) =   3.60
  TOTAL STREAM AREA(ACRES) =     5.64
  PEAK FLOW RATE(CFS) AT CONFLUENCE =      6.40

****************************************************************************
  FLOW PROCESS FROM NODE   4006.00 TO NODE   4007.00 IS CODE =   7
----------------------------------------------------------------------------
  >>>>>USER SPECIFIED HYDROLOGY INFORMATION AT NODE<<<<<
============================================================================
  USER-SPECIFIED VALUES ARE AS FOLLOWS:
  TC(MIN) =   8.33   RAIN INTENSITY(INCH/HOUR) =  4.17
  TOTAL AREA(ACRES) =     8.30   TOTAL RUNOFF(CFS) =     17.90

****************************************************************************
  FLOW PROCESS FROM NODE   4006.00 TO NODE   4007.00 IS CODE =   1
----------------------------------------------------------------------------
  >>>>>DESIGNATE INDEPENDENT STREAM FOR CONFLUENCE<<<<<
```

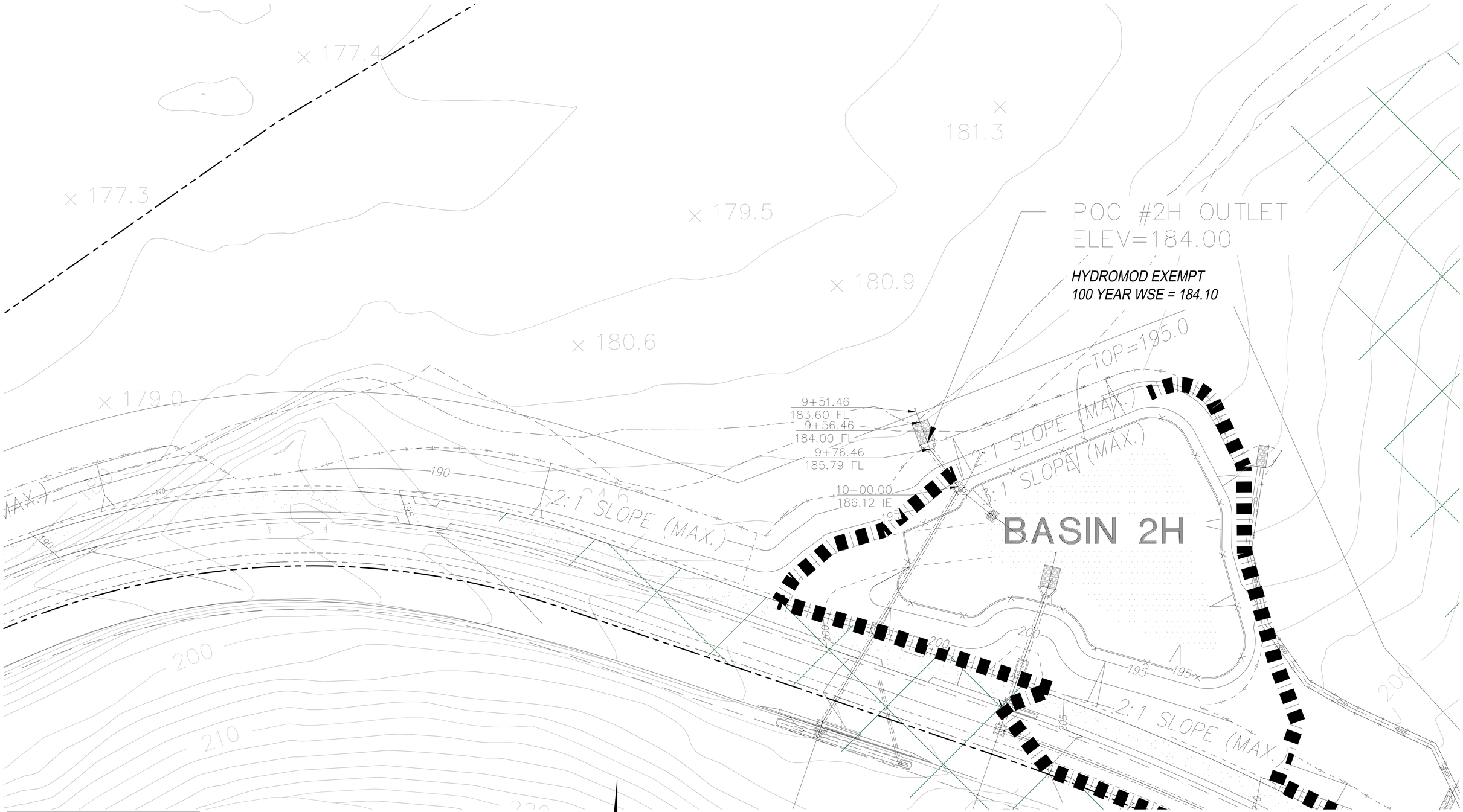


**LEGEND**

AREA FROM DRAINAGE MANAGEMENT AREA — X.XX Ac.

DRAINAGE FLOWPATH

SUBCATCHMENT BOUNDARY

HMP EXEMPT DMA BOUNDARY

N

20 10 0 20 40 60

SCALE: 1"=20'

| | |
|---|---|
| SCALE: | 1"=20' |
| JOB #: | 4192.10 |
| CREATED: | 10/28/24 |

PREPARED BY:


**PROJECT DESIGN CONSULTANTS**
Planning | Landscape Architecture | Engineering | Survey

701 B Street, Suite 800
San Diego, CA 92101
619.235.6471 Tel
619.234.0349 Fax


**COUNTY OF SAN DIEGO**

**OCEAN BREEZE RANCH**

*HYDROMODIFICATION EXHIBIT*
*ULTIMATE CONDITIONS*
*POC 2H EXEMPTION*


\\Ca-sand-p9-um\fastdata\TALONFAST_CORE\TALONFAST-SRV\acquisitions\CA-SAND-PD\Projects\4192.10\Engr\Reports\Hydromod-FE\EXH\4192.10

WATER SURFACE PROFILE - CHANNEL DEFINITION LISTING



| CARD CODE | SECT NO | CHN TYPE | NO OF PIER/PIP | AVE PIER WIDTH | HEIGHT 1 DIAMETER | BASE WIDTH | ZL | ZR | INV DROP | Y(1) | Y(2) | Y(3) | Y(4) | Y(5) | Y(6) | Y(7) | Y(8) | Y(9) | Y(10) |
|---|---|---|---|---|---|---|---|---|---|---|---|---|---|---|---|---|---|---|---|
| CD | 1 | 3 | 0 | .000 | 4.000 | 4.000 | .000 | .000 | .00 | | | | | | | | | | |
| CD | 2 | 4 | 1 | | 2.500 | | | | | | | | | | | | | | |
| CD | 3 | 4 | 1 | | 2.000 | | | | | | | | | | | | | | |
| CD | 4 | 3 | 0 | .000 | .900 | 10.000 | 20.000 | 20.000 | .00 | | | | | | | | | | |
| CD | 5 | 3 | 0 | .000 | .500 | 12.000 | 20.000 | 20.000 | .00 | | | | | | | | | | |



WATER SURFACE PROFILE - TITLE CARD LISTING

HEADING LINE NO 1 IS -

OBR

HEADING LINE NO 2 IS -

LINE W-3

HEADING LINE NO 3 IS -

10 YEAR UNDETAINED



WATER SURFACE PROFILE - ELEMENT CARD LISTING

ELEMENT NO 1 IS A SYSTEM OUTLET * * *

| U/S DATA | STATION | INVERT | SECT | W S ELEV |
|---|---|---|---|---|
| | 951.460 | 183.600 | 4 | 183.600 |

ELEMENT NO 2 IS A TRANSITION * * *

| U/S DATA | STATION | INVERT | SECT | N | RADIUS | ANGLE |
|---|---|---|---|---|---|---|
| | 956.460 | 184.000 | 5 | .040 | .000 | .000 |

WARNING - ADJACENT SECTIONS ARE NOT IDENTICAL - SEE SECTION NUMBERS AND CHANNEL DEFINITIONS

ELEMENT NO 3 IS A REACH * * *

| U/S DATA | STATION | INVERT | SECT | N | RADIUS | ANGLE | ANG PT | MAN H |
|---|---|---|---|---|---|---|---|---|
| | 976.460 | 185.790 | 2 | .013 | .000 | .000 | 26.000 | 0 |

ELEMENT NO 4 IS A WALL ENTRANCE *

| U/S DATA | STATION | INVERT | SECT | FP |
|---|---|---|---|---|
| | 976.460 | 185.790 | 1 | .200 |

ELEMENT NO 5 IS A JUNCTION * * * * * * *

| U/S DATA | STATION | INVERT | SECT | LAT-1 | LAT-2 | N | Q3 | Q4 | INVERT-3 | INVERT-4 | PHI 3 | PHI 4 |
|---|---|---|---|---|---|---|---|---|---|---|---|---|
| | 1000.000 | 186.120 | 1 | 3 | 0 | .013 | 8.200 | .000 | 186.620 | .000 | 64.000 | .000 |

| RADIUS | ANGLE |
|---|---|
| .000 | .000 |

ELEMENT NO 6 IS A WALL EXIT *

| U/S DATA | STATION | INVERT | SECT |
|---|---|---|---|
| | 1000.000 | 186.120 | 2 |

ELEMENT NO 7 IS A REACH * * *

| U/S DATA | STATION | INVERT | SECT | N | RADIUS | ANGLE | ANG PT | MAN H |
|---|---|---|---|---|---|---|---|---|
| | 1040.060 | 187.000 | 2 | .013 | .000 | .000 | .000 | 0 |

ELEMENT NO 8 IS A WALL ENTRANCE *

| U/S DATA | STATION | INVERT | SECT | FP |
|---|---|---|---|---|
| | 1040.060 | 187.000 | 1 | .200 |

ELEMENT NO 9 IS A SYSTEM HEADWORKS * *

| U/S DATA | STATION | INVERT | SECT | W S ELEV |
|---|---|---|---|---|
| | 1040.060 | 187.000 | 1 | 187.000 |

Program Package Serial Number: 7358

WATER SURFACE PROFILE LISTING Date:11- 7-2024 Time: 4:14:32

OBR
LINE W-3
10 YEAR UNDETAINED

| Station / L/Elem | Invert Elev / Ch Slope | Depth (FT) | Water Elev | Q (CFS) | Vel (FPS) / SF Ave | Vel Head / HF | Energy Grd.El. / SE Dpth | Super Elev / Froude N | Critical Depth / Norm Dp | Flow Top Width | Height/ Dia.-FT / "N" | Base Wt or I.D. / X-Fall | ZL / ZR | No Wth Prs/Pip / Type Ch |
|---|---|---|---|---|---|---|---|---|---|---|---|---|---|---|
| 951.460 | 183.600 | .359 | 183.959 | 26.10 | 4.24 | .28 | 184.24 | .00 | .44 | 24.35 | .900 | 10.000 | **** | 0 .0 |
| TRANS STR | .0800 | | | | | .0584 | .29 | .36 | 1.48 | | .040 | .00 | **** | BOX |
| 956.460 | 184.000 | .416 | 184.416 | 26.10 | 3.09 | .15 | 184.57 | .00 | .42 | 28.61 | .500 | 12.000 | **** | 0 .0 |
| 956.460 | 184.000 | 1.033 | 185.033 | 26.10 | 13.63 | 2.89 | 187.92 | .00 | 1.74 | 2.46 | 2.500 | .000 | .00 | 1 .0 |
| 2.014 | .0895 | | | | | .0306 | .06 | 1.03 | 2.72 | .78 | .013 | .00 | .00 | PIPE |
| 958.474 | 184.180 | 1.052 | 185.232 | 26.10 | 13.30 | 2.75 | 187.98 | .00 | 1.74 | 2.47 | 2.500 | .000 | .00 | 1 .0 |
| 3.412 | .0895 | | | | | .0278 | .09 | 1.05 | 2.63 | .78 | .013 | .00 | .00 | PIPE |
| 961.886 | 184.486 | 1.091 | 185.577 | 26.10 | 12.68 | 2.50 | 188.07 | .00 | 1.74 | 2.48 | 2.500 | .000 | .00 | 1 .0 |
| 2.871 | .0895 | | | | | .0244 | .07 | 1.09 | 2.45 | .78 | .013 | .00 | .00 | PIPE |
| 964.757 | 184.743 | 1.131 | 185.874 | 26.10 | 12.09 | 2.27 | 188.14 | .00 | 1.74 | 2.49 | 2.500 | .000 | .00 | 1 .0 |
| 2.399 | .0895 | | | | | .0215 | .05 | 1.13 | 2.29 | .78 | .013 | .00 | .00 | PIPE |
| 967.157 | 184.957 | 1.174 | 186.131 | 26.10 | 11.52 | 2.06 | 188.19 | .00 | 1.74 | 2.50 | 2.500 | .000 | .00 | 1 .0 |
| 2.032 | .0895 | | | | | .0189 | .04 | 1.17 | 2.13 | .78 | .013 | .00 | .00 | PIPE |
| 969.189 | 185.139 | 1.218 | 186.357 | 26.10 | 10.99 | 1.87 | 188.23 | .00 | 1.74 | 2.50 | 2.500 | .000 | .00 | 1 .0 |
| 1.708 | .0895 | | | | | .0166 | .03 | 1.22 | 1.99 | .78 | .013 | .00 | .00 | PIPE |
| 970.896 | 185.292 | 1.264 | 186.556 | 26.10 | 10.48 | 1.70 | 188.26 | .00 | 1.74 | 2.50 | 2.500 | .000 | .00 | 1 .0 |
| 1.415 | .0895 | | | | | .0146 | .02 | 1.26 | 1.85 | .78 | .013 | .00 | .00 | PIPE |
| 972.312 | 185.419 | 1.313 | 186.732 | 26.10 | 9.99 | 1.55 | 188.28 | .00 | 1.74 | 2.50 | 2.500 | .000 | .00 | 1 .0 |
| 1.173 | .0895 | | | | | .0129 | .02 | 1.31 | 1.72 | .78 | .013 | .00 | .00 | PIPE |

Program Package Serial Number: 7358

WATER SURFACE PROFILE LISTING Date:11- 7-2024 Time: 4:14:32

OBR
LINE W-3
10 YEAR UNDETAINED

| Station | Invert Elev | Depth (FT) | Water Elev | Q (CFS) | Vel (FPS) | Vel Head | Energy Grd.El. | Super Elev | Critical Depth | Flow Top Width | Height/ Dia.-FT | Base Wt or I.D. | ZL | No Wth Prs/Pip |
|---|---|---|---|---|---|---|---|---|---|---|---|---|---|---|
| L/Elem | Ch Slope | | | | | SF Ave | HF | SE Dpth | Froude N | Norm Dp | "N" | X-Fall | ZR | Type Ch |
| 973.485 | 185.524 | 1.364 | 186.888 | 26.10 | 9.52 | 1.41 | 188.30 | .00 | 1.74 | 2.49 | 2.500 | .000 | .00 | 1 .0 |
| .948 | .0895 | | | | | .0114 | .01 | 1.36 | 1.60 | .78 | .013 | .00 | .00 | PIPE |
| 974.433 | 185.609 | 1.418 | 187.027 | 26.10 | 9.08 | 1.28 | 188.31 | .00 | 1.74 | 2.48 | 2.500 | .000 | .00 | 1 .0 |
| .748 | .0895 | | | | | .0101 | .01 | 1.42 | 1.49 | .78 | .013 | .00 | .00 | PIPE |
| 975.181 | 185.676 | 1.475 | 187.151 | 26.10 | 8.66 | 1.16 | 188.31 | .00 | 1.74 | 2.46 | 2.500 | .000 | .00 | 1 .0 |
| .569 | .0895 | | | | | .0089 | .01 | 1.48 | 1.38 | .78 | .013 | .00 | .00 | PIPE |
| 975.750 | 185.726 | 1.535 | 187.262 | 26.10 | 8.26 | 1.06 | 188.32 | .00 | 1.74 | 2.43 | 2.500 | .000 | .00 | 1 .0 |
| .395 | .0895 | | | | | .0079 | .00 | 1.54 | 1.28 | .78 | .013 | .00 | .00 | PIPE |
| 976.145 | 185.762 | 1.599 | 187.361 | 26.10 | 7.87 | .96 | 188.32 | .00 | 1.74 | 2.40 | 2.500 | .000 | .00 | 1 .0 |
| .236 | .0895 | | | | | .0070 | .00 | 1.60 | 1.18 | .78 | .013 | .00 | .00 | PIPE |
| 976.381 | 185.783 | 1.667 | 187.450 | 26.10 | 7.51 | .87 | 188.32 | .00 | 1.74 | 2.36 | 2.500 | .000 | .00 | 1 .0 |
| .079 | .0895 | | | | | .0062 | .00 | 1.67 | 1.09 | .78 | .013 | .00 | .00 | PIPE |
| 976.460 | 185.790 | 1.741 | 187.531 | 26.10 | 7.15 | .79 | 188.33 | .00 | 1.74 | 2.30 | 2.500 | .000 | .00 | 1 .0 |
| WALL | ENTRANCE | | | | | | | | | | | | | |
| 976.460 | 185.790 | 3.741 | 189.531 | 26.10 | 1.74 | .05 | 189.58 | .00 | 1.10 | 4.00 | 4.000 | 4.000 | .00 | 0 .0 |
| JUNCT STR | .0140 | | | | | .0002 | .00 | 3.74 | .16 | | .013 | .00 | .00 | BOX |

---------- WARNING - Flow depth near top of box conduit ----------

Program Package Serial Number: 7358

WATER SURFACE PROFILE LISTING Date:11- 7-2024 Time: 4:14:32

OBR
LINE W-3
10 YEAR UNDETAINED

| Station | Invert Elev | Depth (FT) | Water Elev | Q (CFS) | Vel (FPS) | Vel Head | Energy Grd.El. | Super Elev | Critical Depth | Flow Top Width | Height/ Dia.-FT | Base Wt or I.D. | ZL | No Wth Prs/Pip |
|---|---|---|---|---|---|---|---|---|---|---|---|---|---|---|
| L/Elem | Ch Slope | | | | | SF Ave | HF | SE Dpth | Froude N | Norm Dp | "N" | X-Fall | ZR | Type Ch |
| 1000.000 | 186.120 | 3.442 | 189.562 | 17.90 | 1.30 | .03 | 189.59 | .00 | .85 | 4.00 | 4.000 | 4.000 | .00 | 0 .0 |
| WALL | EXIT | | | | | | | | | | | | | |
| 1000.000 | 186.120 | 3.442 | 189.562 | 17.90 | 3.65 | .21 | 189.77 | .00 | 1.43 | .00 | 2.500 | .000 | .00 | 1 .0 |
| 40.060 | .0220 | | | | | .0019 | .08 | 3.44 | .00 | .93 | .013 | .00 | .00 | PIPE |
| 1040.060 | 187.000 | 2.639 | 189.639 | 17.90 | 3.65 | .21 | 189.85 | .00 | 1.43 | .00 | 2.500 | .000 | .00 | 1 .0 |
| WALL | ENTRANCE | | | | | | | | | | | | | |
| 1040.060 | 187.000 | 2.840 | 189.840 | 17.90 | 1.58 | .04 | 189.88 | .00 | .85 | 4.00 | 4.000 | 4.000 | .00 | 0 .0 |

## 8.2 Hydromodification Management Points of Compliance

- List and describe all points of compliance (POCs) for flow control for hydromodification management.
- For each POC, provide a POC identification name or number, and a receiving channel identification name or number correlating to the project's HMP Exhibit (see Attachment 2).

| POC name or # | Channel name or # | POC Description |
|---|---|---|
| 1A | | Outlet from Basin 1A |
| 1B | | Outlet from Basin 1B |
| 3A | | Outlet from Basin 3A |
| 3B | | Outlet from Basin 3B |
| 3C | | Outlet from Basin 3C |
| 3D | | Outlet from Basin 3D |
| 3E | | Outlet from Basin 3E |
| 3F | | Outlet from Basin 3F |
| 3G | | Outlet from Basin 3G |
| 3H | | Outlet from Basin 3H and 3I |
| 3J | | Outlet from Basins 3J and 3K |
| EQ Road | | Outlet from Tributary Area flowing to Equestrian Road |
| | | |
| | | |
| | | |
| | | |
| | | |
| | | |
| | | |

## 8.3 Geomorphic Assessment of Receiving Water Channels

Insert Geomorphic Assessment behind this cover page or submit as a separate stand-alone document labeled Sub-attachment 8.3.

# HYDROMODIFICATION SCREENING

# FOR

# OCEAN BREEZE RANCH

**June 5, 2024**




**Wayne W. Chang, MS, PE 46548**

ChangConsultants

Civil Engineering ◦ Hydrology ◦ Hydraulics ◦ Sedimentation

**P.O. Box 9496**
**Rancho Santa Fe, CA 92067**
**(858) 692-0760**

# -TABLE OF CONTENTS -

Introduction....1
Domain of Analysis....2
Initial Desktop Analysis....5
Field Screening....6
Conclusion....10
Figures....11

**APPENDICES**

A. SCCWRP Initial Desktop Analysis

B. SCCWRP Field Screening Data

**MAP POCKET**

Study Area Exhibit

FOR REVIEW ONLY

## INTRODUCTION

The County of San Diego's March 2011, *Final Hydromodification Management Plan;* January 8, 2011, *Standard Urban Stormwater Mitigation Plan* (SUSMP); and January 2019, *BMP Design Manual* outline low flow thresholds for hydromodification analyses. The thresholds are based on a percentage of the pre-project 2-year flow ($Q_2$), i.e., $0.1Q_2$ (low flow threshold and high susceptibility to erosion), $0.3Q_2$ (medium flow threshold and medium susceptibility to erosion), or $0.5Q_2$ (high flow threshold and low susceptibility to erosion). A flow threshold of $0.1Q_2$ represents a natural downstream receiving conveyance system with a high susceptibility to bed and/or bank erosion. This is the default value used for hydromodification analyses and will result in the most conservative (largest) on-site facility sizing. A flow threshold of $0.3Q_2$ or $0.5Q_2$ represents downstream receiving conveyance systems with a medium or low susceptibility to erosion, respectively. In order to qualify for a medium or low erosion susceptibility rating, a project must perform a channel screening analysis based on the March 2010, *Hydromodification Screening Tools: Field Manual for Assessing Channel Susceptibility,* developed by the Southern California Coastal Water Research Project (SCCWRP). The SCCWRP results are compared with the critical shear stress calculator results from the County of San Diego's Critical Flow Calculator spreadsheet to establish the appropriate erosion susceptibility threshold of low, medium, or high.

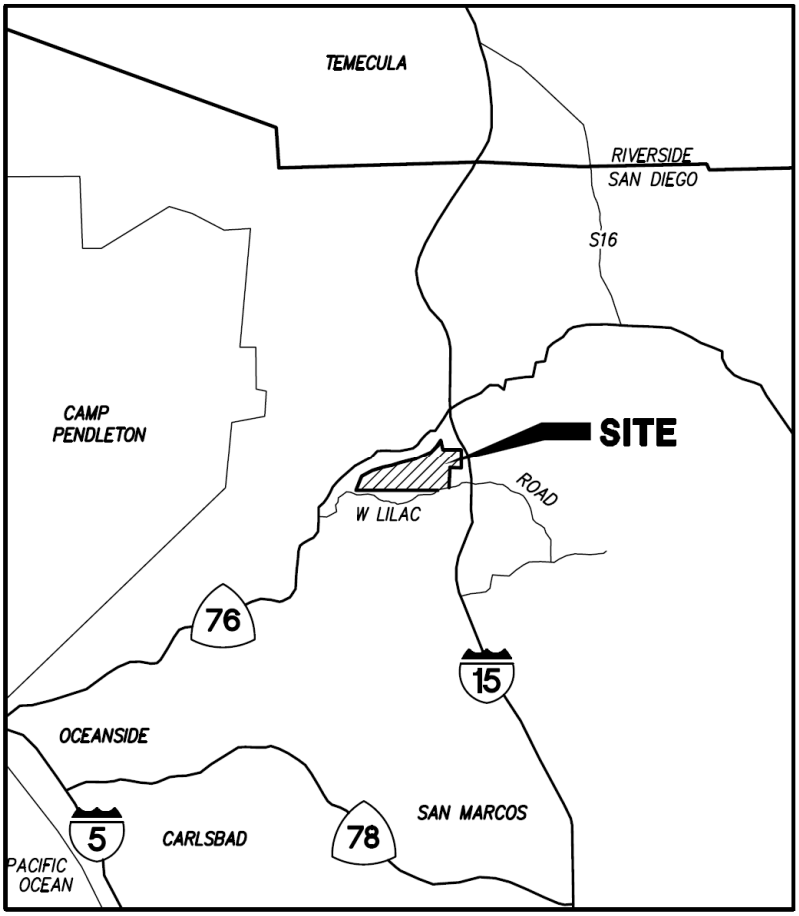


**Vicinity Map**

This report provides hydromodification screening analyses for a portion of the Ocean Breeze Ranch project for which the final engineering plans (grading and improvement) are being prepared by Project Design Consultants (PDC). The project site consists of 1,402.52 acres within the Fallbrook Community Planning Area. The site is located west of Interstate 15, south of the San Luis Rey River and State Route 76, and north of West Lilac Road. The site is generally in between the cross streets of Camino del Cielo and Via Ararat Drive along West Lilac Road. Sullivan Middle School is located near the southeastern portion of the site (see the Vicinity Map).

Under pre-project conditions, Ocean Breeze Ranch is primarily a Quarter Horse and Thoroughbred breeding farm. The site contains a few residences, agricultural farms, and a large complex of barns and pastures for horses. Storm runoff from the site and surrounding tributary areas primarily occurs as sheet flow on the natural ground surface or within naturally-lined drainage courses or private drainage facilities before ultimately entering the San Luis Rey River. Since the site is large, the storm runoff flows in various directions within and near the site.

The project includes preservation of the existing residences and barns, and development of a large portion of the site into single family homes with associated improvements including streets, landscaping, and utilities. The project proposes a combination of 396 traditional and estate lots for single-family use. The proposed on-site storm drain systems will have several discharge locations into the surrounding area. This report provides a downstream channel assessment for two of the discharge locations or points of compliance requested by PDC (labeled POC 1A and 3H on the Study Area Exhibit).

A May 22, 2019 report, *Hydromodification Screening for Ocean Breeze Ranch,* was prepared by Chang Consultants for PDC's tentative map. The report was approved by the County of San Diego during entitlements. This report analyzes the same two points of compliance (POC 1A and 3H) as the May 22, 2019 report. Final engineering has resulted in minor changes to the tributary drainage areas, updated topographic mapping for Reach 3H, and small adjustments to both POC elevations/locations. The changes were not significant, so the prior results did not change. This report provides an update to the hydromodification screening based for final engineering.

The SCCWRP screening tool requires both office and field work to establish the vertical and lateral susceptibility of a downstream receiving channel to erosion. The vertical and lateral assessments are performed independently of each other although the lateral results can be affected by the vertical rating. A screening analysis was performed to assess the low flow threshold for each POC.

The initial step in performing the SCCWRP screening analysis is to establish the domain of analysis and the study reaches within the domain. This is followed by office and field components of the screening tool along with the associated analyses and results. The following sections cover these procedures in sequence.

## DOMAIN OF ANALYSIS

SCCWRP defines an upstream and downstream domain of analysis, which establish the study limits. The County of San Diego's HMP specifies the downstream domain of analysis based on

the SCCWRP criteria. The HMP indicates that the downstream domain is the first point where one of these is reached:

- at least one reach downstream of the first grade control point
- tidal backwater/lentic waterbody
- equal order tributary
- accumulation of 50 percent drainage area for stream systems or 100 percent drainage area for urban conveyance systems (storm drains, hardened channels, etc.). This is also defined as a two-fold increase in drainage area.

The upstream limit is defined as:

- proceed upstream for 20 channel top widths or to the first grade control point, whichever comes first. Identify hard points that can check headward migration and evidence of active headcutting.

SCCWRP defines the maximum spatial unit, or reach (a reach is circa 20 channel widths), for assigning a susceptibility rating within the domain of analysis to be 200 meters (656 feet). If the domain of analysis is greater than 200 meters, the study area should be subdivided into smaller reaches of less than 200 meters for analysis. Most of the units in the HMP's SCCWRP analysis are metric. Metric units are used in this report only where given so in the HMP. Otherwise English units are used.

*Downstream Domain of Analysis*

The downstream domain of analysis locations for the study areas covered by this report have been determined by assessing and comparing the four bullet items above. As discussed in the Introduction, the project runoff will be collected by a series of proposed drainage facilities that outlet at various locations around the site. PDC has identified two specific locations to be analyzed by this report (see the Study Area Exhibit in the map pocket). A downstream domain of analysis has been identified below both of PDC's requested points of compliance (see POCs 1A and 3H on the Study Area Exhibit). Each downstream domain of analysis location was selected as follows.

Per the first bullet item, the first permanent grade control in the natural drainage courses below both of the POCs was located (see the Study Area Exhibit). Grade controls can be created by several types of improvements. They can occur at road crossings where the associated culvert will maintain the channel bed elevation. They can also occur where the drainage course is lined with concrete, asphalt, riprap, etc. due to an at-grade or Arizona crossing, or a drop structure. For POC 1A, a grade control will occur at a proposed street crossing over 800 feet downstream. The crossing will contain a culvert that acts as a grade control. For POC 3H, an existing CMP culvert is located under a dirt road crossing approximately 311 feet below the POC (see Figure 5). The culvert acts as a grade control.

The second bullet item is the tidal backwater or lentic (standing or still water such as ponds, pools, marshes, lakes, etc.) waterbody location. Based on review of Google Earth, there is no tidal backwater or lentic waterbody near either of the two POCs. The nearest such waterbody is at the Pacific Ocean (all of the project runoff ultimately flows to the San Luis Rey River and then Pacific Ocean), which is over 13 miles southwest of the site. Therefore, the second bullet item criteria will not govern over the other bullet item criteria for either of the POC's.

The third bullet item is met when the natural drainage course below a POC confluences with a stream with an equal order or larger tributary area. The Study Area Exhibit contains the drainage areas tributary to each POC and/or the first reach below the POC. The drainage areas were delineated based on PDC's hydrologic analysis and topographic mapping. For POC 3H, a portion of the off-site area was delineated using USGS mapping needed to supplement the project topography. It is apparent from the Study Area Exhibit that the drainage course associated with POC 1A confluences with a receiving drainage course in a short distance. Based on a Streamstats watershed area analysis (see Appendix A), the receiving drainage course covers 0.3 square miles so is larger than the POC 1A drainage area (51.02 acres) at the confluence. In addition, the receiving drainage course is closer to POC 1A than its associated permanent grade controls. Therefore, the third bullet item criteria will govern over the first bullet item for POC 1A.

On the other hand, the Study Area Exhibit reveals that the drainage course below POC 3H does not confluence with a larger drainage course prior to its permanent grade control. Therefore, the third bullet item criteria will not govern over the first bullet item for POC 3H.

The fourth bullet item was assessed by comparing the drainage area tributary to each POC with the location in each downstream drainage course where an additional 50 or 100 percent drainage area is accumulated. Fifty percent applies to POC 1A because its associated drainage course is a stream system and not an urban conveyance. For POC 1A, it is clear from the Study Area Exhibit that the accumulated area between POC 1A and the larger receiving watercourse identified in the third bullet item is less than 50 percent of the drainage area tributary to the POC. Therefore, the fourth bullet item will not govern over the third for POC 1A. For POC 3H, the Study Area Exhibit shows that well over 100 percent drainage area is added between the POC and its downstream grade control. Therefore, the bullet item 4 criteria will govern over the bullet item 1 criteria for POC 3H.

From the above information, the downstream domain of analysis locations for the POCs are based on different criteria. For POC 1A, the closest location from the four bullet items is established by the third criteria, which is at a confluence with an equal order or larger tributary area. For POC 3H, the closest location is established by the fourth criteria, which is accumulation of 50 percent drainage area below the POC.

*Upstream Domain of Analysis*

The proposed drainage facilities tributary to both POCs outlet into the uppermost end of their receiving drainage courses. Since the natural drainage courses do not extend upstream of the drainage facility outlets, the upstream domain of analysis location for these two POC's will be at each POC.

*Study Reaches within Domain of Analysis*

After the upstream and downstream domain of analysis locations are established for each POC, the study reaches are identified (see the Study Area Exhibit). One or more study reaches can occur below each POC. The following describes the study reaches associated with each POC.

Reach 1A (116 feet long) is the study reach below POC 1A. It extends from the upstream domain of analysis location at the proposed storm drain (and riprap pad) outlet at POC 1A to the confluence with the larger receiving watercourse.

Reach 3H (311 feet long) extends from the upstream domain of analysis location at the storm drain outlet at POC 3H downstream to where at least 50 percent drainage area is accumulated. For Reach 3H, the study reach was extended to the nearest grade control. The Study Area Exhibit shows that the added area at the grade control exceeds 50 percent by a considerable amount (it is closer to 200 percent), so the results will be conservative.

All of the study reaches are within the 656 foot (200 meters) maximum reach length recommended by SCCWRP.

## INITIAL DESKTOP ANALYSIS

After the domain of analysis is established, SCCWRP requires an "initial desktop analysis" that involves office work. The initial desktop analysis establishes the watershed area, mean annual precipitation, valley slope, and valley width. These terms are defined in Form 1, which is included in Appendix A. SCCWRP recommends the use of National Elevation Data (NED) to determine the watershed areas, valley slopes, and valley widths. The NED data is similar to USGS mapping. For the project, PDC provided their grading plans and 2-foot contour interval topographic mapping for the project site and adjacent areas. This mapping is more detailed that NED data, so will provide more accurate results. A portion of the off-site drainage area tributary to Reach 3H is not covered by the PDC mapping, so USGS mapping was used for this area.

The mapping sources and watershed delineations are included on the Study Area Exhibit in the map pocket.

The mean annual precipitation was obtained from the rain gage closest to the site. This is the Western Regional Climate Center's Vista 2 NNE gage (see Appendix A). The average annual rainfall measured at this gage for the period of record from 1957 to 2016 is 13.1 inches.

| Reach | Tributary Drainage Area, sq. mi. | Valley Slope, m/m | Valley Width, m |
|---|---|---|---|
| 1A | 0.0797 | 0.0474 | 1.52 |
| 3H | 0.1079 | 0.0235 | 3.05 |

**Table 1. Summary of Drainage Area, Valley Slope, and Valley Width**

The valley slope and valley width were determined for each study reach from the 2-foot contour interval topographic mapping. NED data was not used because it is not very accurate for these parameters. The valley slope is the longitudinal slope of the channel bed along the flow line, so it is determined by dividing the elevation difference within a study reach by the length of the flow line. The valley width is the valley bottom width dictated by breaks in the hillslope. The valley slope and valley width within each reach are included in Table 1.

These values were input to a spreadsheet to calculate the simulated peak flow, screening index, and valley width index outlined in Form 1. The input data and results are tabulated in Appendix A. This completes the initial desktop analysis.

## FIELD SCREENING

After the initial desktop analysis is complete, a field assessment must be performed. The field assessment is used to establish a natural channel's vertical and lateral susceptibility to erosion. SCCWRP states that although they are admittedly linked, vertical and lateral susceptibility are assessed separately for several reasons. First, vertical and lateral responses are primarily controlled by different types of resistance, which, when assessed separately, may improve ease of use and lead to increased repeatability compared to an integrated, cross-dimensional assessment. Second, the mechanistic differences between vertical and lateral responses point to different modeling tools and potentially different management strategies. Having separate screening ratings may better direct users and managers to the most appropriate tools for subsequent analyses.

The field screening tool uses combinations of decision trees and checklists. Decision trees are typically used when a question can be answered fairly definitively and/or quantitatively (e.g., $d_{50}$ < 16 mm). Checklists are used where answers are relatively qualitative (e.g., the condition of a grade control). Low, medium, high, and very high ratings are applied separately to the vertical and lateral analyses. When the vertical and lateral analyses return divergent values, the most conservative value shall be selected as the flow threshold for the hydromodification analyses.

*Vertical Stability*

The purpose of the vertical stability decision tree (Figure 6-4 in the County of San Diego HMP) is to assess the state of the channel bed with a particular focus on the risk of incision (i.e., down cutting). The decision tree is included in Figure 8. The first step is to assess the channel bed resistance. There are three categories defined as follows:

1. Labile Bed – sand-dominated bed, little resistant substrate.

2. Transitional/Intermediate Bed – bed typically characterized by gravel/small cobble, Intermediate level of resistance of the substrate and uncertain potential for armoring.

3. Threshold Bed (Coarse/Armored Bed) – armored with large cobbles or larger bed material or highly-resistant bed substrate (i.e., bedrock).

Based on the photographs and site investigation, the bed material and resistance is generally within the transitional/intermediate bed category. There was no evidence of a threshold bed condition. However, some bed areas contained smaller grain sizes typically found in a labile bed.

In addition to the material size and compaction, there are several factors that establish the erodibility of a channel such as the flow rate (i.e., size of the tributary area), grade controls, channel slope, vegetative cover, channel planform, etc. The Introduction of the SCCWRP *Hydromodification Screening Tools: Field Manual* identifies several of these factors. When multiple factors influence erodibility, it is appropriate to perform the more detailed SCCWRP analysis, which is to analyze a channel according to SCCWRP's transitional/intermediate bed procedure. This requires the most rigorous steps and will generate the appropriate results given the range of factors that define erodibility. The transitional/intermediate bed procedure takes into account that bed material may fall within the labile category (the bed material size is used in SCCWRP's Form 3 Figure 4), but other factors may trend towards a less erodible condition. Dr. Eric Stein from SCCWRP, who co-authored the *Hydromodification Screening Tools: Field Manual* in the *Final Hydromodification Management Plan* (HMP), indicated that it would be appropriate to analyze channels with multiple factors that impact erodibility using the transitional/intermediate bed procedure. Consequently, this procedure was used to produce more accurate results.

Transitional/intermediate beds cover a wide susceptibility/potential response range and need to be assessed in greater detail to develop a weight of evidence for the appropriate screening rating. The three primary risk factors used to assess vertical susceptibility for channels with transitional/intermediate bed materials are:

1. Armoring potential – three states (Checklist 1)

2. Grade control – three states (Checklist 2)

3. Proximity to regionally-calibrated incision/braiding threshold (Mobility Index Threshold – Probability Diagram)

These three risk factors are assessed using checklists and a diagram (see Appendix B), and the results of each are combined to provide a final vertical susceptibility rating for the intermediate/transitional bed-material group. Each checklist and diagram contains a Category A, B, or C rating. Category A is the most resistant to vertical changes while Category C is the most susceptible.

Checklist 1 determines armoring potential of the channel bed. The channel bed along both of the study reaches is within Category B, which represents intermediate bed material within unknown armoring potential due to a surface veneer and/or vegetation. Figures 1 through 4 reveal that the study reaches contain a relatively uniform cover of grasses, weeds, and bushes. The soil was probed and penetration was relatively difficult through the underlying layer.

Checklist 2 determines grade control characteristics of the channel bed. This is reliant on the spacing of the grade controls. The categories for Checklist 2 are related to a grade control spacing of $2/S_v$ and $4/S_v$, where $S_v$ is the valley slope from Appendix A. The $2/S_v$ and $4/S_v$ results are in

meters, so a factor is applied to convert to feet. A reach is in Category A if it has a spacing of less than $2/S_v$. A reach is in Category B if it has a spacing between $2/S_v$ and $4/S_v$. Finally, a reach is in Category C if it has a spacing greater than $4/S_v$. Table 2 summarizes the $S_v$, $2/S_v$ and $4/S_v$ values for the two study reaches along with the maximum grade control spacing in each reach. Table 3 also identifies each reach's category, which are either A or B.

| Reach | $S_v$, feet/feet | $2/S_v$, feet | $4/S_v$, feet | Grade Control Spacing, feet | Category |
|---|---|---|---|---|---|
| 1A | 0.0491 | 138 | 277 | 116 | A |
| 3H | 0.0235 | 280 | 559 | 311 | B |

**Table 2. Checklist 3 Values based on Grade Control Spacing**

The Screening Index Threshold is a probability diagram that depicts the risk of incising or braiding based on the potential stream power of the valley relative to the median particle diameter. The threshold is based on regional data from Dr. Howard Chang of Chang Consultants and others. The probability diagram is based on $d_{50}$ as well as the screening index value determined in the initial desktop analysis (see Appendix A). The Form 1 results in Appendix A determined an INDEX values for all six reaches.

For Reach 1A and 3H, the $d_{50}$ has to be determined to assess the Screening Index Threshold. $d_{50}$ can be derived from a pebble count in which a minimum of 100 particles are obtained along transects at the site. SCCRWP states that if fines less than ½-inch thick are at a sample point, it is appropriate to sample the coarser buried substrate. The $d_{50}$ value is the particle size in which 50 percent of the particles are smaller and 50 percent are larger. The pebble count results for Reach 1A and 3H are included in Appendix B. The results show a $d_{50}$ of 8 millimeters for both reaches. The screening index for the reaches are tabulated in Appendix A. Plotting the $d_{50}$ and screening index values on the Mobility Index Threshold diagram shows that both of these reaches have a less than 50 percent probability of incising or braiding, which falls within Category A.

The overall vertical rating is determined from the above described Checklist 1, Checklist 2, and Mobility Index Threshold results. The scoring is based on the following values:

Category A = 3, Category B = 6, Category C = 9

The vertical rating score is based on these values and the equation:

$$\text{Vertical Rating} = [(\text{armoring} \times \text{grade control})^{1/2} \times \text{screening index score}]^{1/2}$$

Table 3 summarizes the Checklist 1, 2, and 3 values for each reach as well as their vertical rating. The results show the vertical rating for both study reaches is less than 4.5, so these reaches have a low threshold for vertical susceptibility.

| Reach | Checklist 1 (armoring) | Checklist 2 (grade control) | Checklist 3 (screening index) | Vertical Rating |
|---|---|---|---|---|
| 1A | 6 | 3 | 3 | 3.6 |
| 3H | 6 | 6 | 3 | 4.2 |

**Table 3. Overall Vertical Rating**

*Lateral Stability*

The purpose of the lateral decision tree (Figure 6-5 from County of San Diego HMP included in Figure 9) is to assess the state of the channel banks with a focus on the risk of widening. Channels can widen from either bank failure or through fluvial processes such as chute cutoffs, avulsions, and braiding. Widening through fluvial avulsions/active braiding is a relatively straightforward observation. If braiding is not already occurring, the next logical step is to assess the condition of the banks. Banks fail through a variety of mechanisms; however, one of the most important distinctions is whether they fail in mass (as many particles) or by fluvial detachment of individual particles. Although much research is dedicated to the combined effects of weakening, fluvial erosion, and mass failure, SCCWRP found it valuable to segregate bank types based on the inference of the dominant failure mechanism (as the management approach may vary based on the dominant failure mechanism). A decision tree (Form 4 in Appendix B) is used in conducting the lateral susceptibility assessment. Definitions and photographic examples are also provided below for terms used in the lateral susceptibility assessment.

The first step in the decision tree is to determine if lateral adjustments are occurring. The adjustments can take the form of extensive mass wasting (greater than 50 percent of the banks are exhibiting planar, slab, or rotational failures and/or scalloping, undermining, and/or tension cracks). The adjustments can also involve extensive fluvial erosion (significant and frequent bank cuts on over 50 percent of the banks). Neither mass wasting nor extensive fluvial erosion was evident within any of the reaches during a field investigation. As seen in the figures, the banks are either well vegetated or relatively low confirming that mass wasting and extensive fluvial erosion has not occurred.

The next step in the Form 4 decision tree is to assess the consolidation of the bank material. The banks were moderate to well-consolidated. This determination was made because the ground surface was difficult to penetrate with a probe. The banks were densely vegetated and/or relatively level and stable as seen in the figures. In addition, the banks showed no evidence of crumbling and were composed of relatively well-packed particles.

Form 6 (see Appendix B) is used to assess the probability of mass wasting. Form 6 identifies a 10, 50, and 90 percent probability based on the bank angle and bank height. From the topographic mapping and site investigation, the average bank angles in both reaches are flatter than 2:1 (26.6 degrees). Form 6 shows that the probably of mass wasting and bank failure has less than 10 percent risk for a 26.6 degree bank angle or less regardless of the bank height.

The final two steps in the Form 4 decision tree are based on the braiding risk determined from the vertical rating as well as the Valley Width Index (VWI) calculated in Appendix A. If the vertical rating is high, the braiding risk is considered to be greater than 50 percent. Excessive braiding can

lead to lateral bank failure. For the both reaches the vertical rating is low, so the braiding risk is less than 50 percent. Furthermore, a VWI greater than 2 represents channels unconfined by bedrock or hillslope and, hence, subject to lateral migration. The VWI calculations in the spreadsheet in Appendix A show that the VWI for both reaches much is less than 2.

From the above steps, the lateral susceptibility rating is low for Reaches 1A and 3H (colored circles are included on the Form 4: Lateral Susceptibility Field Sheet decision tree sheets in Appendix B showing the decision path).

## CONCLUSION

The SCCWRP channel screening tools were used to assess the downstream channel susceptibility for a portion of the Ocean Breeze Ranch tentative map by Project Design Consultants. The project's storm runoff will be collected by proposed on-site drainage systems and conveyed to various outfalls. PDC selected two of the outfalls (POC 1A and 3H) for this report. A downstream channel assessment for each POC was performed based on office analyses and field work. The results indicate a low threshold for vertical and lateral susceptibility for POC 1A and 3H.

The HMP requires that the low threshold results be compared with the critical stress calculator results. The Critical Flow Calculator (spreadsheet provided by the County of San Diego) results are included in Appendix B for the associated study reaches. The channel dimensions were estimated from the topographic mapping and site visit, while the additional input parameters are from Form 1 in Appendix A. The critical stress results returned a low threshold for each reach. Therefore, the SCCWRP analyses will govern and demonstrate that a low overall threshold is applicable to POC 1A and 3H (i.e., $0.5Q_2$).



**Figure 1. Looking Downstream towards Reach 1A from Upper End near POC 1A**



**Figure 2. Lower End of Reach 1A**



**Figure 3. Looking Downstream towards Reach 3H from Upper End near POC 3H**



**Figure 4. Looking Upstream towards Reach 3H from Lower End**



**Figure 5. Roadway Culvert at Lower End of Reach 3H**




**Figure 6. Gravelometer along Reach 2A**

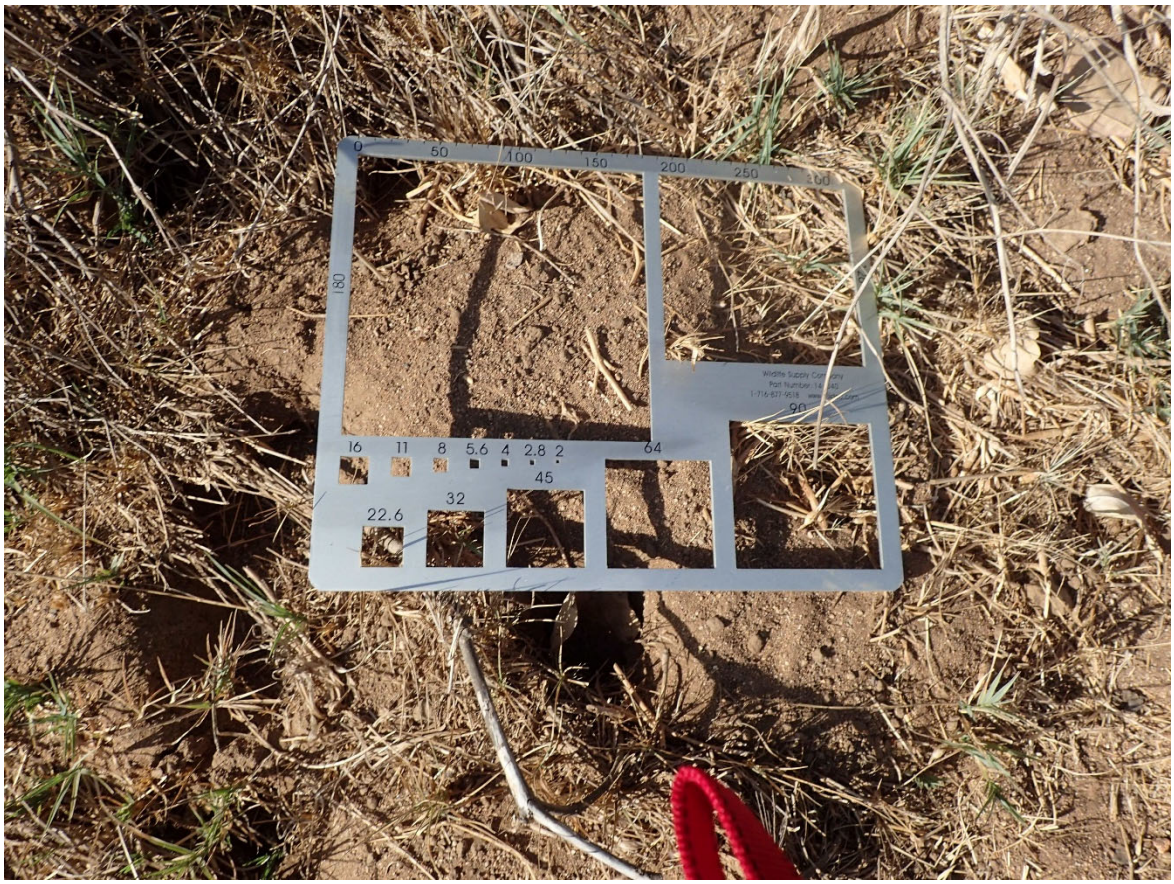


**Figure 7. Gravelometer along Reach 3H**

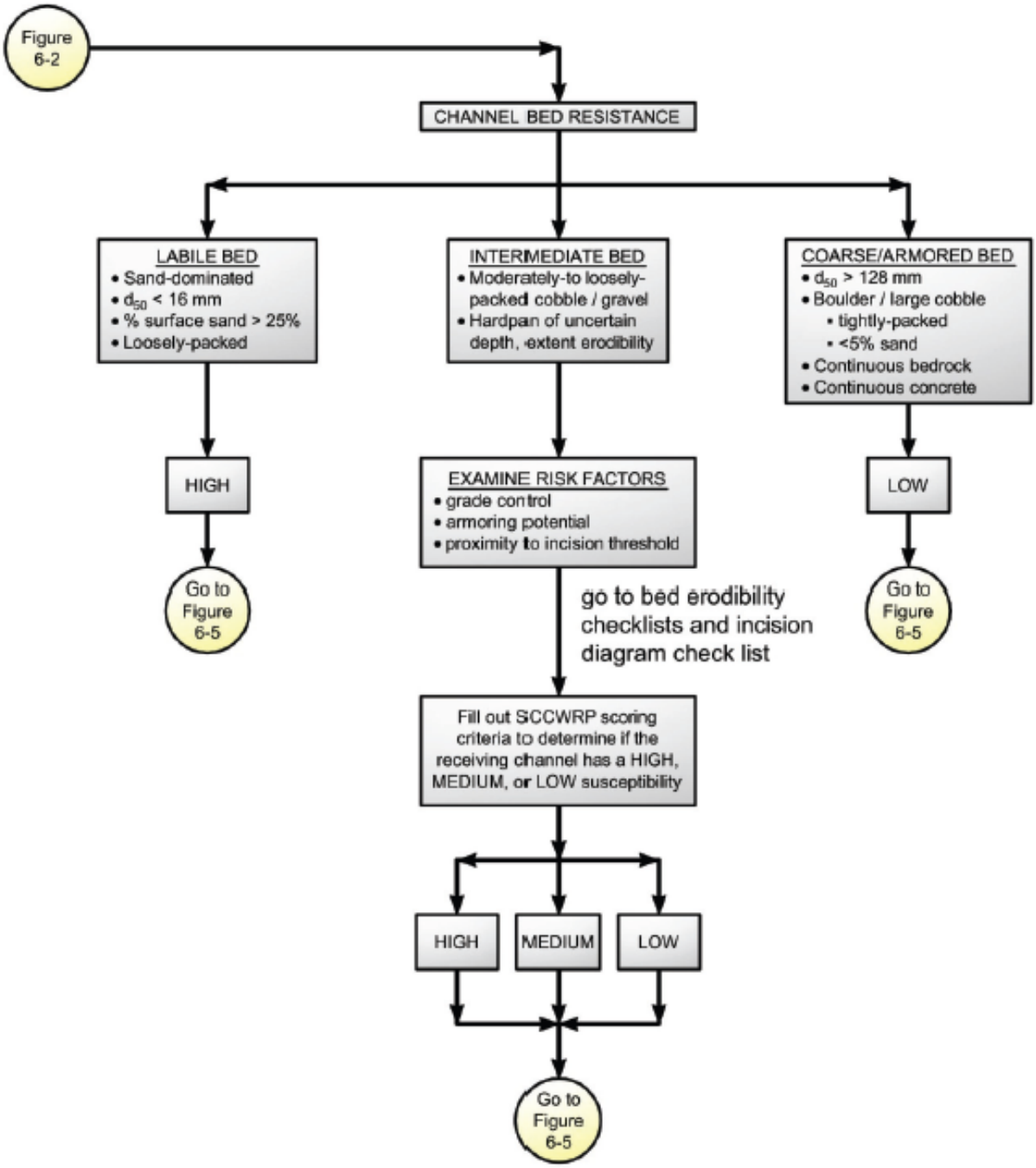


*Figure 6-4. SCCWRP Vertical Susceptibility*

**Figure 8. SCCWRP Vertical Channel Susceptibility Matrix**

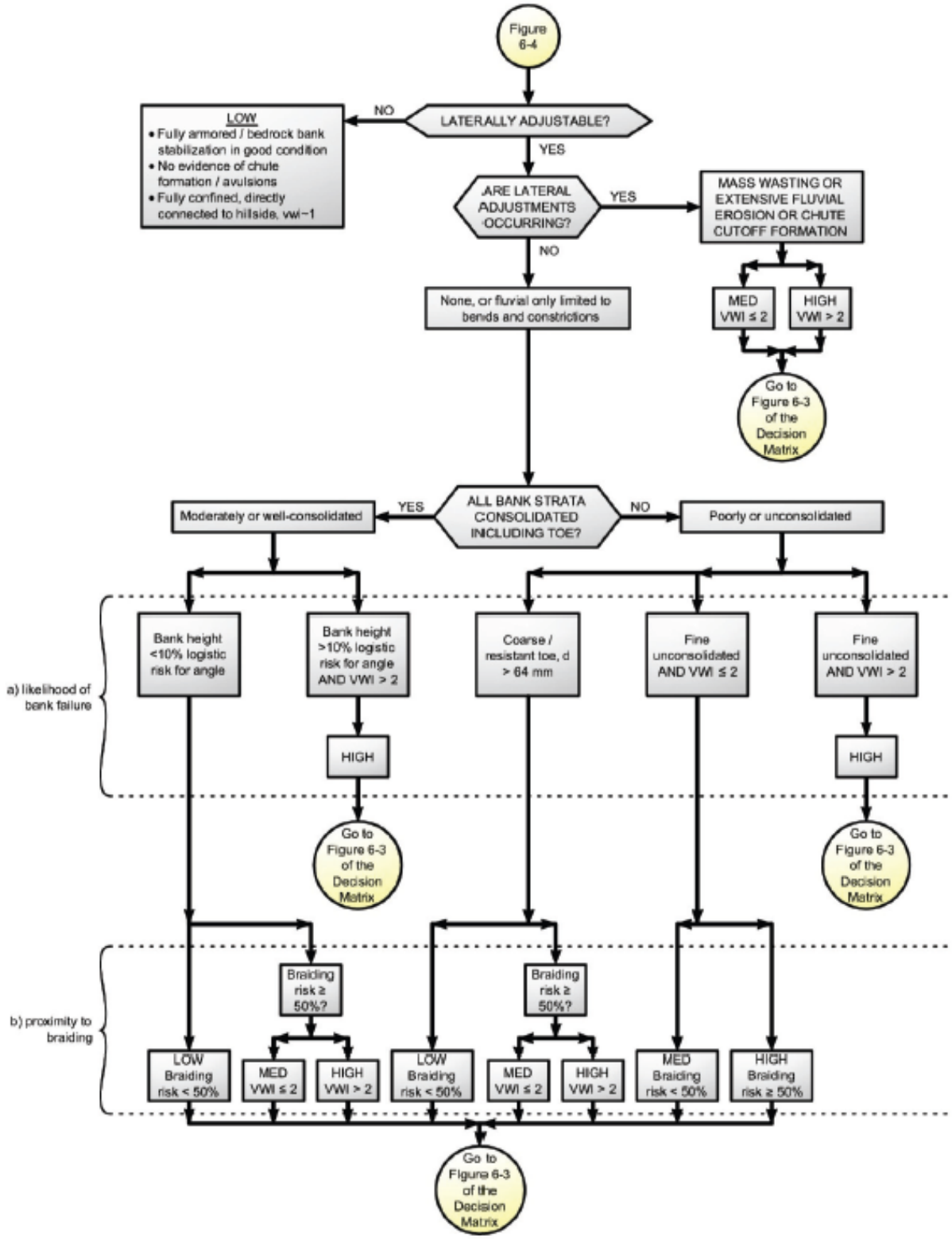


*Figure 6-5. Lateral Channel Susceptibility*

**Figure 9. SCCWRP Lateral Channel Susceptibility Matrix**

# APPENDIX A

## SCCWRP INITIAL DESKTOP ANALYSIS

# FORM 1: INITIAL DESKTOP ANALYSIS

**Complete all shaded sections.**

IF required at multiple locations, circle one of the following site types:

**Applicant Site / Upstream Extent / Downstream Extent**

**Location:** Latitude: 33.3070 Longitude: -117.1918

Description (river name, crossing streets, etc.): Ocean Breeze Ranch

North of West Lilac Road and south of San Luis Rey River

**GIS Parameters:** The International System of Units (SI) is used throughout the assessment as the field standard and for consistency with the broader scientific community. However, as the singular exception, US Customary units are used for contributing drainage area (A) and mean annual precipitation (P) to apply regional flow equations after the USGS. See SCCWRP Technical Report 607 for example measurements and "Screening Tool Data Entry.xls" for automated calculations.

**Form 1 Table 1. Initial desktop analysis in GIS.**

| Symbol | | Variable | Description and Source | Value |
|---|---|---|---|---|
| Watershed properties (English units) | **A** | Area ($mi^2$) | Contributing drainage area to screening location via published Hydrologic Unit Codes (HUCs) and/or ≤ 30 m National Elevation Data (NED), USGS seamless server | See attached Form 1 table on next page for calculated values for each reach. |
| | **P** | Mean annual precipitation (in) | Area-weighted annual precipitation via USGS delineated polygons using records from 1900 to 1960 (which was more significant in hydrologic models than polygons delineated from shorter record lengths) | |
| Site properties (SI units) | **$S_v$** | Valley slope (m/m) | Valley slope at site via NED, measured over a relatively homogenous valley segment as dictated by hillslope configuration, tributary confluences, etc., over a distance of up to ~500 m or 10% of the main-channel length from site to drainage divide | |
| | **$W_v$** | Valley width (m) | Valley bottom width at site between natural valley walls as dictated by clear breaks in hillslope on NED raster, irrespective of potential armoring from floodplain encroachment, levees, etc. (imprecise measurements have negligible effect on rating in wide valleys where VWI is >> 2, as defined in lateral decision tree) | |

**Form 1 Table 2. Simplified peak flow, screening index, and valley width index. Values for this table should be calculated in the sequence shown in this table, using values from Form 1 Table 1.**

| Symbol | Dependent Variable | Equation | Required Units | Value |
|---|---|---|---|---|
| **$Q_{10cfs}$** | 10-yr peak flow ($ft^3/s$) | $Q_{10cfs} = 18.2 * A^{0.87} * P^{0.77}$ | A ($mi^2$)<br>P (in) | See attached Form 1 table on next page for calculated values for each reach. |
| **$Q_{10}$** | 10-yr peak flow ($m^3/s$) | $Q_{10} = 0.0283 * Q_{10cfs}$ | $Q_{10cfs}$ ($ft^3/s$) | |
| **INDEX** | 10-yr screening index ($m^{1.5}/s^{0.5}$) | $INDEX = S_v * Q_{10}^{0.5}$ | Sv (m/m)<br>$Q_{10}$ ($m^3/s$) | |
| **$W_{ref}$** | Reference width (m) | $W_{ref} = 6.99 * Q_{10}^{0.438}$ | $Q_{10}$ ($m^3/s$) | |
| **VWI** | Valley width index (m/m) | $VWI = W_v/W_{ref}$ | $W_v$ (m)<br>$W_{ref}$ (m) | |

*(Sheet 1 of 1)*

## SCCWRP FORM 1 ANALYSES

| Reach | Area A, sq. mi. | Mean Annual Precip. P, inches | Valley Slope Sv, m/m | Valley Width Wv, m | 10-Year Flow Q10cfs, cfs | 10-Year Flow Q10, cms |
|---|---|---|---|---|---|---|
| 1A | 0.0797 | 13.1 | 0.0474 | 1.52 | 15 | 0.41 |
| 3H | 0.1079 | 13.1 | 0.0235 | 3.05 | 19 | 0.54 |

| Reach | 10-Year Screening Index INDEX | Reference Width Wref, m | Valley Width Index VWI, m/m |
|---|---|---|---|
| 1A | 0.0305 | 4.75 | 0.32 |
| 3H | 0.0172 | 5.33 | 0.57 |

# US COOP Station Map

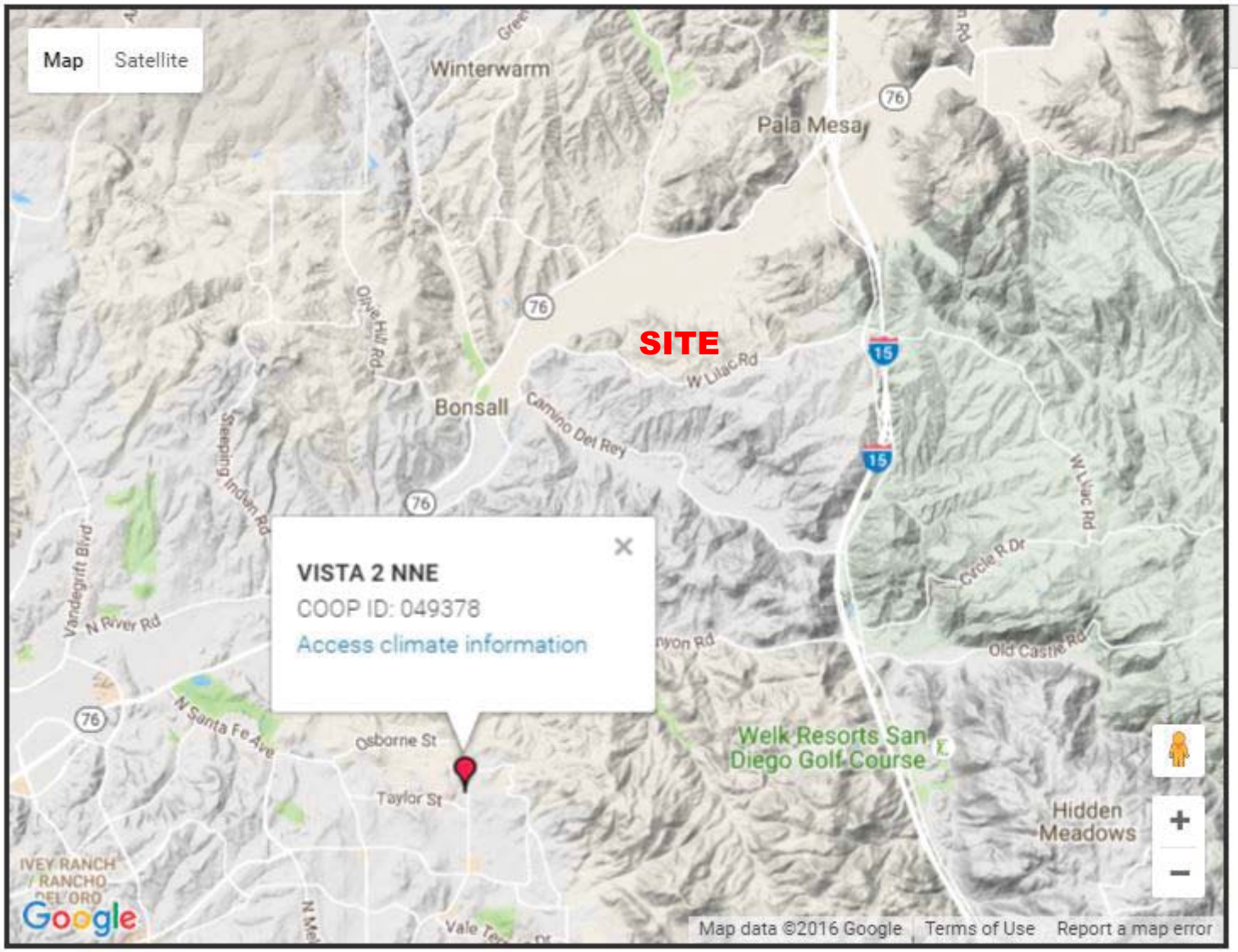


**RAIN GAGE NEAR STUDY AREA**

# VISTA 2 NNE, CALIFORNIA (049378)

## Period of Record Monthly Climate Summary

**Period of Record : 08/01/1957 to 05/12/2016**

| | Jan | Feb | Mar | Apr | May | Jun | Jul | Aug | Sep | Oct | Nov | Dec | Annual |
|---|---|---|---|---|---|---|---|---|---|---|---|---|---|
| Average Max. Temperature (F) | 67.4 | 67.8 | 68.2 | 70.8 | 72.9 | 76.3 | 81.3 | 83.0 | 82.2 | 77.9 | 72.3 | 67.4 | 74.0 |
| Average Min. Temperature (F) | 44.0 | 45.0 | 46.3 | 48.5 | 53.5 | 56.6 | 60.3 | 61.6 | 60.0 | 55.0 | 48.3 | 44.0 | 51.9 |
| Average Total Precipitation (in.) | 2.76 | 2.55 | 2.24 | 1.05 | 0.22 | 0.11 | 0.06 | 0.07 | 0.25 | 0.54 | 1.40 | 1.83 | 13.09 |
| Average Total SnowFall (in.) | 0.0 | 0.0 | 0.0 | 0.0 | 0.0 | 0.0 | 0.0 | 0.0 | 0.0 | 0.0 | 0.0 | 0.0 | 0.1 |
| Average Snow Depth (in.) | 0 | 0 | 0 | 0 | 0 | 0 | 0 | 0 | 0 | 0 | 0 | 0 | 0 |

Percent of possible observations for period of record.
Max. Temp.: 86.6% Min. Temp.: 87% Precipitation: 87.6% Snowfall: 87.7% Snow Depth: 87.3%
Check Station Metadata or Metadata graphics for more detail about data completeness.

---

*Western Regional Climate Center, wrcc@dri.edu*

# Watershed Area of POC 1A Receiving Watercoursee

## StreamStats Report

**Region ID:** CA
**Workspace ID:** CA20240607154542431000
**Clicked Point (Latitude, Longitude):** 33.30080, -117.19691
**Time:** 2024-06-07 08:46:11 -0700

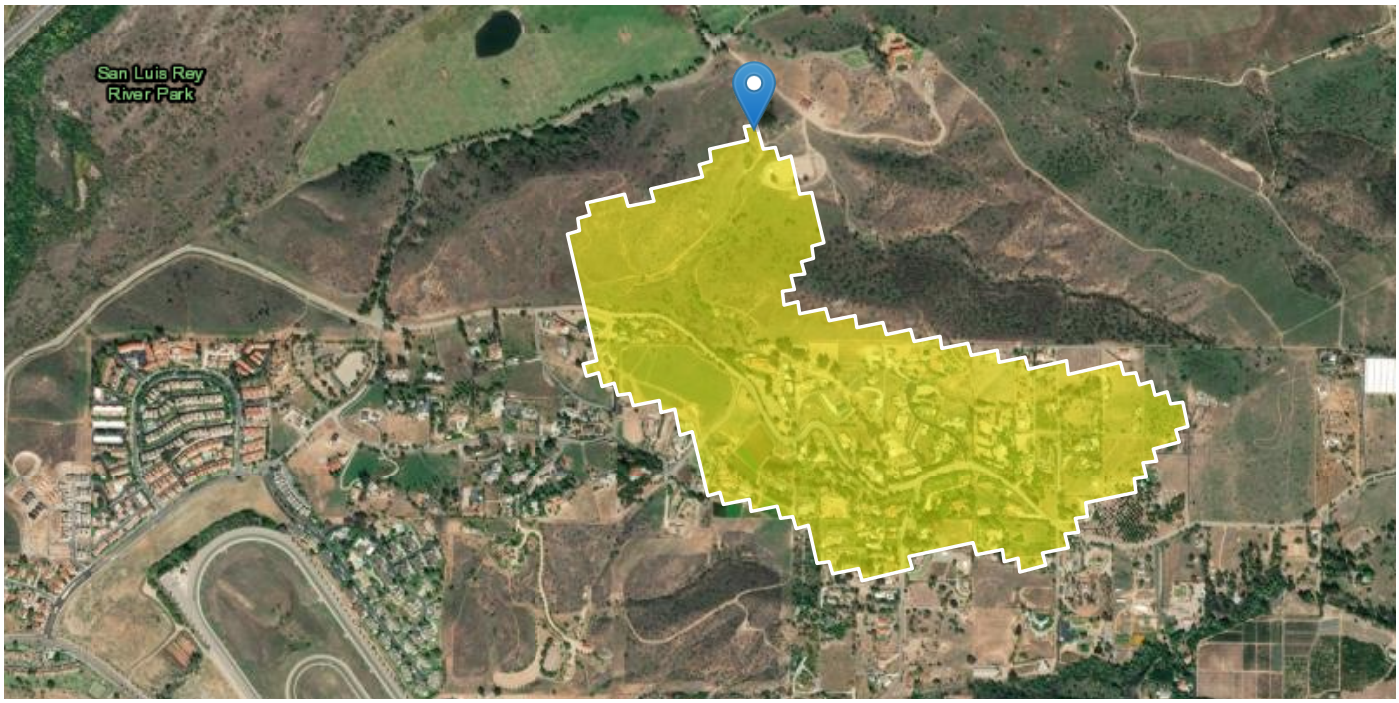


Collapse All

### Basin Characteristics

| Parameter Code | Parameter Description | Value | Unit |
|---|---|---|---|
| DRNAREA | Area that drains to a point on a stream | 0.3 | square miles |

USGS Data Disclaimer: Unless otherwise stated, all data, metadata and related materials are considered to satisfy the quality standards relative to the purpose for which the data were collected. Although these data and associated metadata have been reviewed for accuracy and completeness and approved for release by the U.S. Geological Survey (USGS), no warranty expressed or implied is made regarding the display or utility of the data for other purposes, nor on all computer systems, nor shall the act of distribution constitute any such warranty.

USGS Software Disclaimer: This software has been approved for release by the U.S. Geological Survey (USGS). Although the software has been subjected to rigorous review, the USGS reserves the right to update the software as needed pursuant to further analysis and review. No warranty, expressed or implied, is made by the USGS or the U.S. Government as to the functionality of the software and related material nor shall the fact of release constitute any such warranty. Furthermore, the software is released on condition that neither the USGS nor the U.S. Government shall be held liable for any damages resulting from its authorized or unauthorized use.

USGS Product Names Disclaimer: Any use of trade, firm, or product names is for descriptive purposes only and does not imply endorsement by the U.S. Government.

# APPENDIX B

## SCCWRP FIELD SCREENING DATA

## Form 3 Support Materials

**Form 3 Checklists 1 and 2, along with information recording in Form 3 Table 1, are intended to support the decisions pathways illustrated in Form 3 Overall Vertical Rating for Intermediate/Transitional Bed.**

### Form 3 Checklist 1: Armoring Potential

| | | |
|---|---|---|
| □ | A | A mix of coarse gravels and cobbles that are tightly packed with <5% surface material of diameter <2 mm |
| **X** | B | Intermediate to A and C or hardpan of unknown resistance, spatial extent (longitudinal and depth), or unknown armoring potential due to surface veneer covering gravel or coarser layer encountered with probe |
| □ | C | Gravels/cobbles that are loosely packed or >25% surface material of diameter <2 mm |

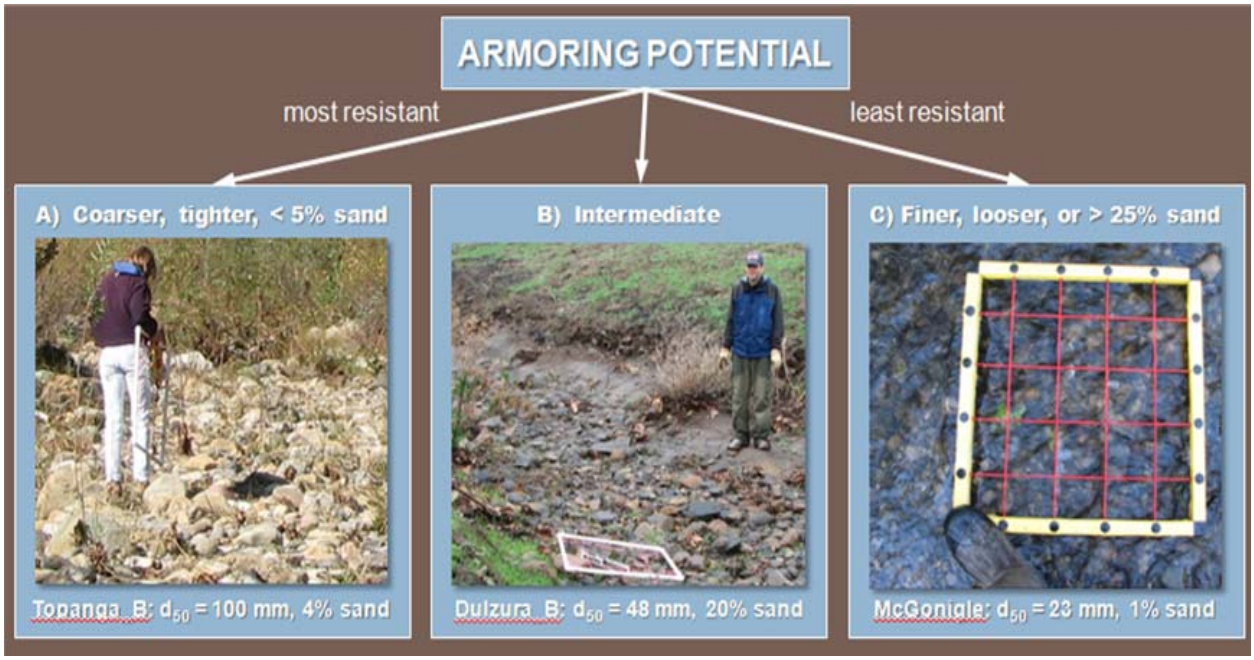


**Form 3 Figure 2. Armoring potential photographic supplement for assessing intermediate beds (16 < $d_{50}$ < 128 mm)** to be used i**n conjunction with Form 3 Checklist 1.**

*(Sheet 2 of 4)*

## RESULT FOR BOTH STUDY REACHES

## Form 3 Checklist 2: Grade Control

| | | |
|---|---|---|
| X | A | Grade control is present with spacing <50 m or $2/S_v$ m<br>• No evidence of failure/ineffectiveness, e.g., no headcutting (>30 cm), no active mass wasting (analyst cannot say grade control sufficient if mass-wasting checklist indicates presence of bank failure), no exposed bridge pilings, no culverts/structures undermined<br>• Hard points in serviceable condition at decadal time scale, e.g., no apparent undermining, flanking, failing grout<br>• If geologic grade control, rock should be resistant igneous and/or metamorphic; For sedimentary/hardpan to be classified as 'grade control', it should be of demonstrable strength as indicated by field testing such as hammer test/borings and/or inspected by appropriate stakeholder |
| X | B | Intermediate to A and C – artificial or geologic grade control present but spaced 2/Sv m to 4/Sv m or potential evidence of failure or hardpan of uncertain resistance |
| □ | C | Grade control absent, spaced >100 m or $>4/S_v$ m, or clear evidence of ineffectiveness |

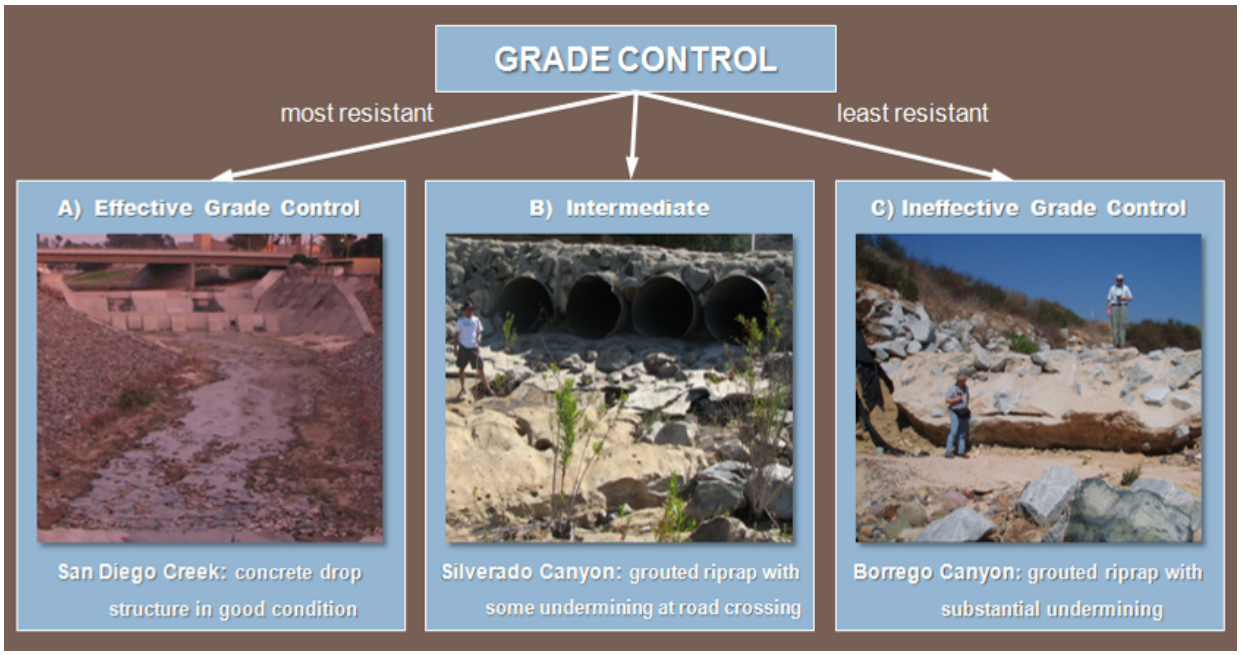


**Form 3 Figure 3. Grade-control (condition) photographic supplement for assessing intermediate beds ($16 < d_{50} < 128$ mm) to be used in conjunction with Form 3 Checklist 2.**



**REACH 1A RESULTS**

**REACH 3H RESULTS**

## Regionally-Calibrated Screening Index Threshold for Incising/Braiding

**For transitional bed channels ($d_{50}$ between 16 and 128 mm) or labile beds (channel not incised past critical bank height), use Form 3 Figure 3 to determine Screening Index Score and complete Form 3 Table 1.**

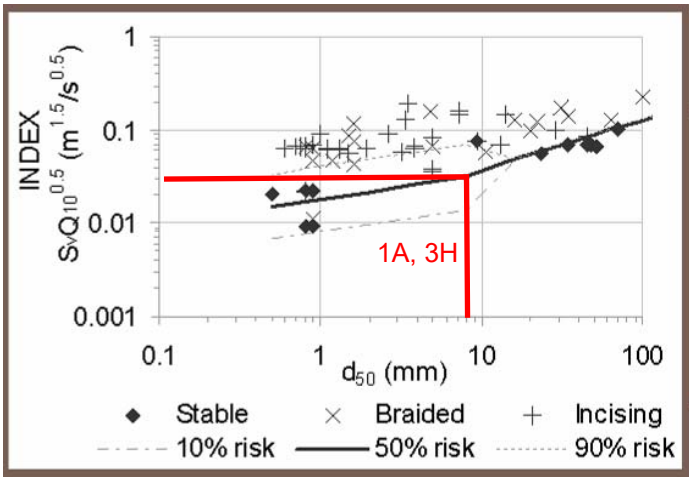


| Model Type | $d_{50}$ (mm) | 50% Risk $S_vQ_{10}^{0.5}$ ($m^{1.5}/s^{0.5}$) |
|---|---|---|
| Logistic Regression $d_{50} \geq 16$ mm | 128 | 0.145 |
| | 96 | 0.125 |
| | 80 | 0.114 |
| | 64 | 0.101 |
| | 48 | 0.087 |
| | 32 | 0.070 |
| | 16 | 0.049 |
| Logistic Reg. $d_{50} < 16$ mm | 8 | 0.031 |
| | 4 | 0.026 |
| | 2 | 0.022 |
| | 1 | 0.018 |
| | 0.5 | 0.015 |

**Form 3 Figure 4. Probability of incising/braiding based on logistic regression of Screening Index and $d_{50}$ to be used in conjunction with Form 3 Table 1.**

**Form 3 Table 1. Values for Screening Index Threshold (probability of incising/braiding) to be used in conjunction with Form 3 Figure 4 (above) to complete Form 3 Overall Vertical Rating for Intermediate/Transitional Bed (below).. Screening Index Score: A = <50% probability of incision for current $Q_{10}$, valley slope, and $d_{50}$; B = Hardpan/$d_{50}$ indeterminate; and C = ≥50% probability of incising/braiding for current $Q_{10}$, valley slope, and $d_{50}$.**

| **$d_{50}$ (mm)** *From Form 2* | **$S_v{*}Q_{10}^{0.5}$ ($m^{1.5}/s^{0.5}$)** *From Form 1* | **$S_v{*}Q_{10}^{0.5}$ ($m^{1.5}/s^{0.5}$)** *50% risk of incising/braiding from table in Form 3 Figure 3 above* | **Screening Index Score (A, B, C)** |
|---|---|---|---|
| | | | |

## Overall Vertical Rating for Intermediate/Transitional Bed

**Calculate the overall Vertical Rating for Transitional Bed channels using the formula below. Numeric values for responses to Form 3 Checklists and Table 1 as follows: A = 3, B = 6, C = 9.**

$$Vertical\ Rating = \sqrt{\{(\sqrt{armoring} * grade\ control) * screening\ index\ score\}}$$

**Vertical Susceptibility based on Vertical Rating: <4.5 = LOW; 4.5 to 7 = MEDIUM; and >7 = HIGH.**



**RESULT FOR BOTH STUDY REACHES**

# PEBBLE COUNT

| # | Reach 1A Diameter, mm | Reach 3H Diameter, mm |
|---|---|---|
| 1 | 2 | 2 |
| 2 | 2 | 2 |
| 3 | 2 | 2 |
| 4 | 2 | 2 |
| 5 | 2 | 2 |
| 6 | 2 | 2 |
| 7 | 2 | 2 |
| 8 | 2.8 | 2 |
| 9 | 2.8 | 2.8 |
| 10 | 2.8 | 2.8 |
| 11 | 2.8 | 2.8 |
| 12 | 2.8 | 2.8 |
| 13 | 2.8 | 2.8 |
| 14 | 2.8 | 2.8 |
| 15 | 2.8 | 2.8 |
| 16 | 2.8 | 2.8 |
| 17 | 2.8 | 2.8 |
| 18 | 2.8 | 2.8 |
| 19 | 2.8 | 2.8 |
| 20 | 4 | 2.8 |
| 21 | 4 | 2.8 |
| 22 | 4 | 2.8 |
| 23 | 4 | 2.8 |
| 24 | 4 | 2.8 |
| 25 | 4 | 4 |
| 26 | 4 | 4 |
| 27 | 4 | 4 |
| 28 | 4 | 4 |
| 29 | 4 | 4 |
| 30 | 4 | 4 |
| 31 | 4 | 4 |
| 32 | 5.6 | 4 |
| 33 | 5.6 | 4 |
| 34 | 5.6 | 4 |
| 35 | 5.6 | 4 |
| 36 | 5.6 | 4 |
| 37 | 5.6 | 4 |
| 38 | 5.6 | 4 |
| 39 | 5.6 | 4 |
| 40 | 5.6 | 4 |
| 41 | 5.6 | 4 |
| 42 | 5.6 | 4 |
| 43 | 5.6 | 4 |

| # | Reach 1A Diameter, mm | Reach 3H Diameter, mm |
|---|---|---|
| 44 | 5.6 | 4 |
| 45 | 8 | 4 |
| 46 | 8 | 4 |
| 47 | 8 | 4 |
| 48 | 8 | 8 |
| 49 | 8 | 8 |
| 50 | 8 | 8 |
| 51 | 8 | 8 |
| 52 | 8 | 8 |
| 53 | 8 | 8 |
| 54 | 8 | 8 |
| 55 | 8 | 8 |
| 56 | 8 | 8 |
| 57 | 8 | 8 |
| 58 | 8 | 8 |
| 59 | 8 | 8 |
| 60 | 8 | 8 |
| 61 | 8 | 8 |
| 62 | 8 | 8 |
| 63 | 8 | 8 |
| 64 | 8 | 8 |
| 65 | 8 | 8 |
| 66 | 8 | 8 |
| 67 | 11 | 8 |
| 68 | 11 | 8 |
| 69 | 11 | 8 |
| 70 | 11 | 8 |
| 71 | 11 | 8 |
| 72 | 11 | 8 |
| 73 | 11 | 8 |
| 74 | 11 | 8 |
| 75 | 11 | 8 |
| 76 | 11 | 8 |
| 77 | 11 | 11 |
| 78 | 11 | 11 |
| 79 | 16 | 11 |
| 80 | 16 | 11 |
| 81 | 16 | 11 |
| 82 | 16 | 11 |
| 83 | 16 | 11 |
| 84 | 16 | 11 |
| 85 | 16 | 11 |
| 86 | 16 | 11 |
| 87 | 16 | 11 |
| 88 | 16 | 11 |

| # | Reach 1A Diameter, mm | Reach 3H Diameter, mm |
|---|---|---|
| 89 | 16 | 11 |
| 90 | 16 | 11 |
| 91 | 16 | 11 |
| 92 | 16 | 11 |
| 93 | 16 | 11 |
| 94 | 16 | 11 |
| 95 | 16 | 11 |
| 96 | 22.6 | 11 |
| 97 | 22.6 | 11 |
| 98 | 22.6 | 11 |
| 99 | 22.6 | 16 |
| 100 | 22.6 | 16 |

# FORM 4: LATERAL SUSCEPTIBILTY FIELD SHEET

**Circle appropriate nodes/pathway for proposed site**
**OR use sequence of questions provided in Form 5.**

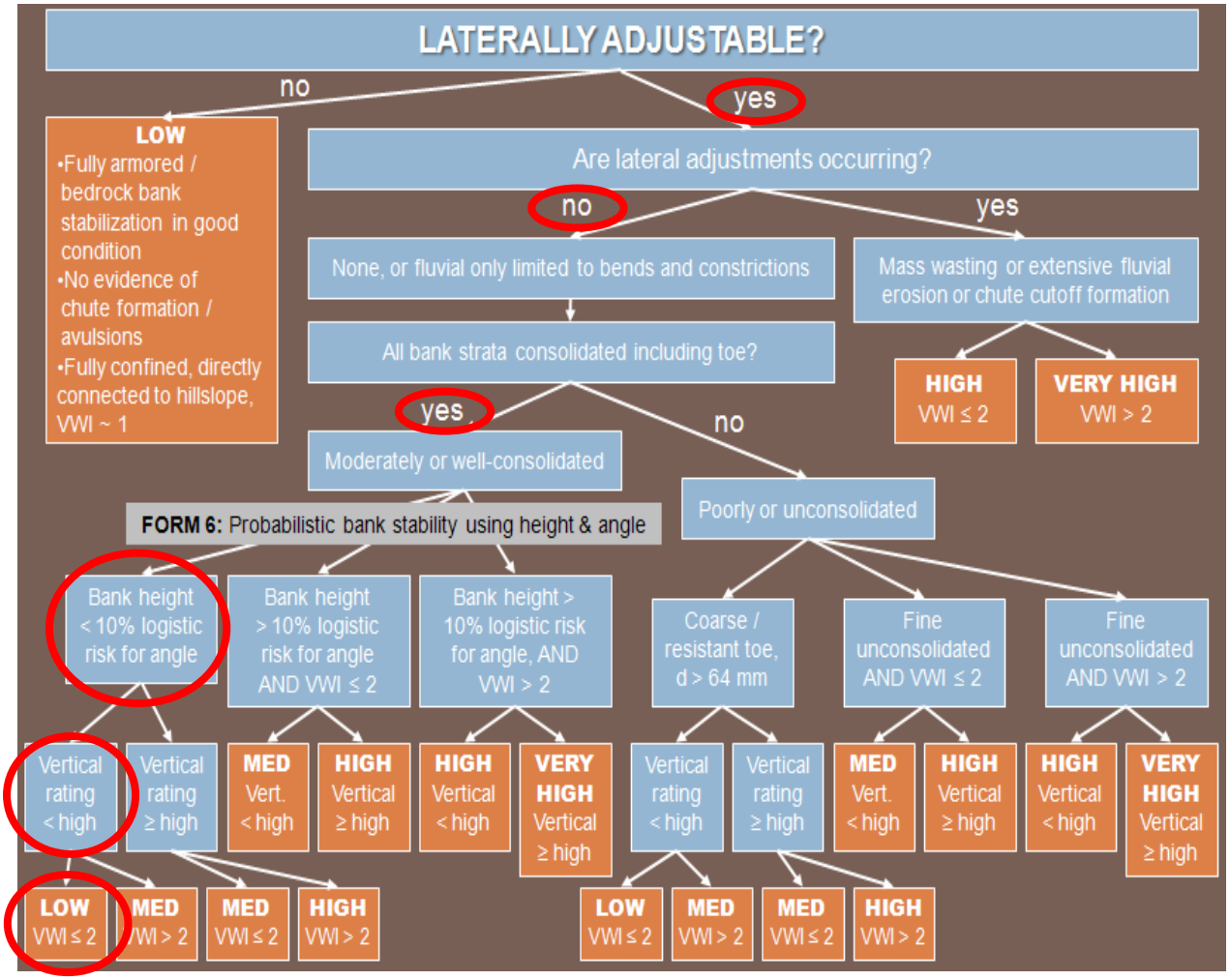


*(Sheet 1 of 1)*

## RESULT FOR BOTH STUDY REACHES

# FORM 6: PROBABILITY OF MASS WASTING BANK FAILURE

If mass wasting is not currently extensive and the banks are moderately- to well-consolidated, measure bank height and angle at several locations (i.e., at least three locations that capture the range of conditions present in the study reach) to estimate representative values for the reach. Use Form 6 Figure 1 below to determine if risk of bank failure is >10% and complete Form 6 Table 1. Support your results with photographs that include a protractor/rod/tape/person for scale.

| | **Bank Angle (degrees)** *(from Field)* | **Bank Height (m)** *(from Field)* | **Corresponding Bank Height for 10% Risk of Mass Wasting (m)** *(from Form 6 Figure 1 below)* | **Bank Failure Risk** *(<10% Risk) (>10% Risk)* |
|---|---|---|---|---|
| **Left Bank** | <26.6 (2:1) | --- | --- | <10% |
| **Right Bank** | <26.6 (2:1) | --- | --- | <10% |

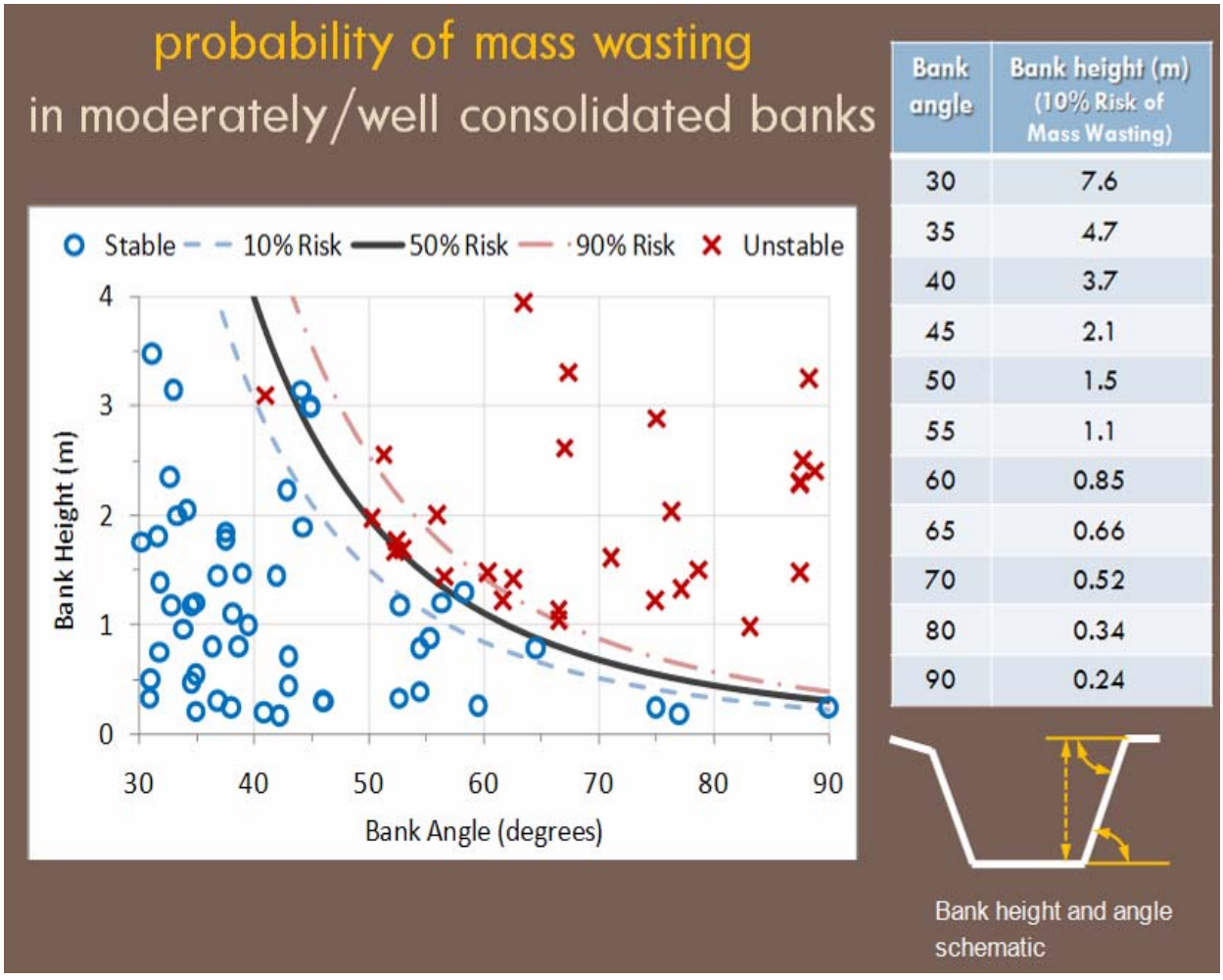


**Form 6 Figure 1. Probability Mass Wasting diagram, Bank Angle:Height/% Risk table, and Band Height:Angle schematic.**

*(Sheet 1 of 1)*

**RESULT FOR BOTH STUDY REACHES**

# Critical Flow Calculator

# Reach 1A

enter all values in green cells
and drop down boxes

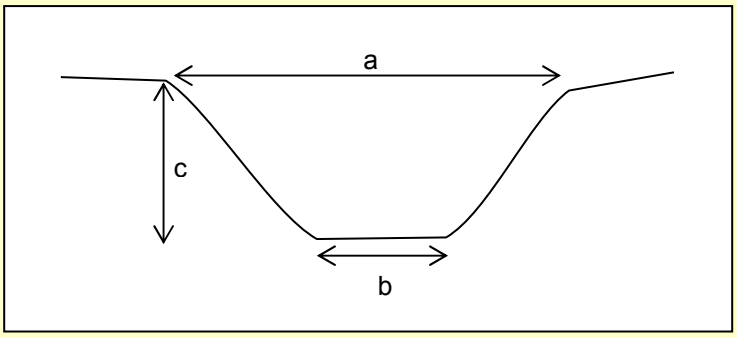


## Inputs

| | |
|---|---|
| a) Receiving channel width at top of bank (ft) - see figure on right | 25.0 |
| b) Channel width at bed (ft) | 5.0 |
| c) Bank height at top of bank (ft) | 1.0 |
| Channel gradient (ft/ft) | 0.0474 |
| Receiving channel roughness | Clean, straight channel, no riffles or deep pools n=0.03 |
| Channel materials (use weakest of bed or banks). If materials are varied use weakest material covering more than 20% of channel. | unconsolidated sandy loam 0.035 lb/sq ft<br>alluvial silt (non coloidal) 0.045 lb/sq ft<br>medium gravel 0.12 lb/sq ft<br>alluvial silt/clay 0.26 lb/sq ft<br>2.5 inch cobble 1.1 lb/sq ft<br>enter own d50 (variable)<br>vegetation (bed and banks) 0.6 lb/sq ft |
| Select method of calculating Q2 | Input own Q2<br>Calculate Q2 using USGS regression |

| | | | |
|---|---|---|---|
| Receiving water watershed annual precip (inches) | 13.1 | Receiving water watershed area at PoC (sq mi) | 0.0797 |
| Project watershed annual precipitation (inches) | 13.1 | Project watershed area draining to PoC (sq mi) | 0.0797 |

## Outputs - Flow control range

| | | | |
|---|---|---|---|
| Receiving water Q2 | 1.5 | **Point of Compliance low flow rate (cfs)** | **0.7** |
| Project site Q2 | 1.5 | **Low flow class** | **0.5Q2** |
| | | **Channel vulnerability** | **Low** |

# Critical Flow Calculator

## Reach 3H

enter all values in green cells
and drop down boxes

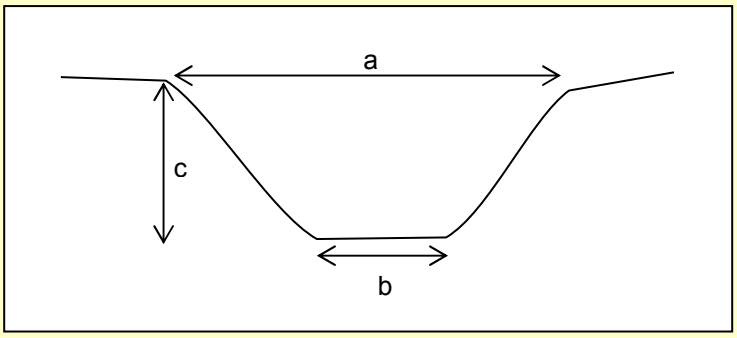


## Inputs

| | |
|---|---|
| a) Receiving channel width at top of bank (ft) - see figure on right | 34.0 |
| b) Channel width at bed (ft) | 10.0 |
| c) Bank height at top of bank (ft) | 3.0 |
| Channel gradient (ft/ft) | 0.0235 |
| Receiving channel roughness | Clean, straight channel, no riffles or deep pools n=0.03 |
| Channel materials (use weakest of bed or banks). If materials are varied use weakest material covering more than 20% of channel. | unconsolidated sandy loam 0.035 lb/sq ft<br>alluvial silt (non coloidal) 0.045 lb/sq ft<br>medium gravel 0.12 lb/sq ft<br>alluvial silt/clay 0.26 lb/sq ft<br>2.5 inch cobble 1.1 lb/sq ft<br>enter own d50 (variable)<br>vegetation (bed and banks) 0.6 lb/sq ft |
| Select method of calculating Q2 | Input own Q2<br>Calculate Q2 using USGS regression |

| | | | |
|---|---|---|---|
| Receiving water watershed annual precip (inches) | 13.1 | Receiving water watershed area at PoC (sq mi) | 0.1079 |
| Project watershed annual precipitation (inches) | 13.1 | Project watershed area draining to PoC (sq mi) | 0.1079 |

## Outputs - Flow control range

| | | | |
|---|---|---|---|
| Receiving water Q2 | 1.8 | **Point of Compliance low flow rate (cfs)** | **0.9** |
| Project site Q2 | 1.8 | **Low flow class** | **0.5Q2** |
| | | **Channel vulnerability** | **Low** |

# OCEAN BREEZE RANCH
## STUDY AREA EXHIBIT

GRAPHIC SCALE
300 0 300 600 1200
1 INCH = 300 FEET

LEGEND:
- PROPOSED GRADING
- PROPOSED STORM DRAIN
- 3H — STUDY REACH (OVERLAND NATURAL FLOW PATH)
- DRAINAGE BASIN BOUNDARY
- 26.34 AC — DRAINAGE BASIN AREA
- 3H — POINT OF COMPLIANCE

SAN LUIS REY RIVER

1A
1A
51.16 AC
26.34 AC
3H
3H
42.65 AC
AC RD
672
DR
LANE

PLAN – STUDY AREA
AND DRAINAGE BASINS
SCALE 1"=300'

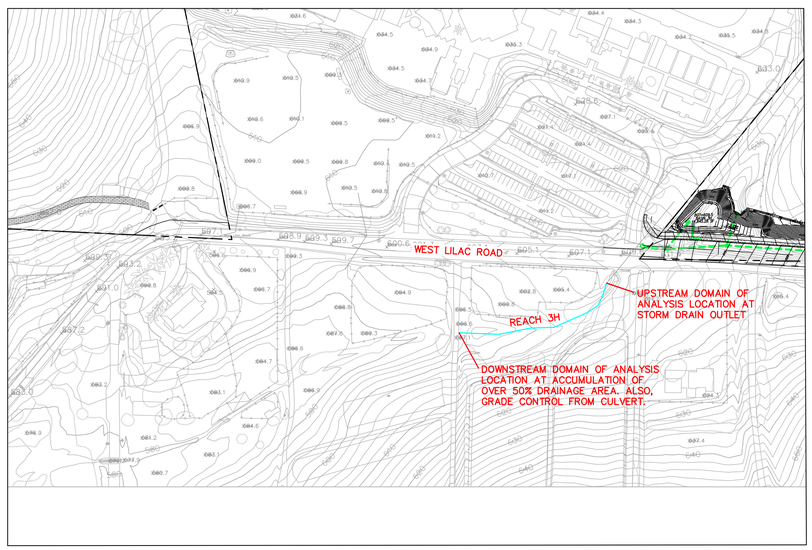


DETAIL – REACH 4B AND 4C
SCALE 1"=100'

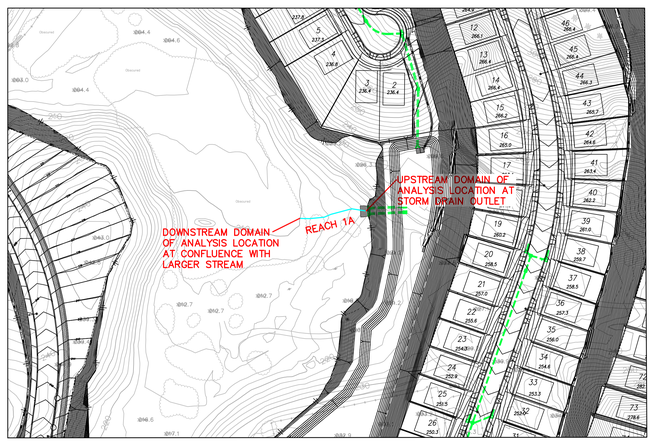


DETAIL – REACH 2A
SCALE 1"=100'

## 9.0 General Requirements

- Complete the table below to indicate which compliance pathway was selected in PDP SWQMP Table 6. Include the corresponding sub-attachment with your SWQMP submittal. Other sub-attachments do not need to be included.
- See the BMPDM sections and appendices listed under "BMPDM Design Resources" for additional explanation of design requirements. Constructed features must fully satisfy the requirements described in these resources, and any other guidance identified by the County.
- DMA Exhibits and Construction Plans: CCSYAs and applicable BMPs identified and described in this attachment must be shown on DMA Exhibits and all applicable construction plans submitted for the project. See Attachment 2 for additional instruction on exhibits and plans.

| Sub-attachments | BMPDM Design Resources |
|---|---|
| ☒ **9.1: Documentation of Hydromodification Management Exemption**[1] | Section 1.6 |
| ☐ **9.2: Watershed Management Area Analysis (WMAA) Mapping**[1] | Appendix H.1.1.2 |
| ☒ **9.3: Resource Protection Ordinance (RPO) Methods** | Appendix H.1.1.1 |
| ☐ **9.4: No Net Impact Analysis** | Appendix H.4 |

[1] The San Diego County Regional comprehensive WMAA mapping data can be found on the Project Clean Water website here: http://www.projectcleanwater.org/download/wmaa_attc_data/

## 9.1 Documentation of Hydromodification Management Exemption (BMPDM Section 1.6)

- If the PDP is exempt from hydromodification management requirements (see Table 4 Part A.1 of the PDP SWQMP), use this Sub-attachment to document the exemption.
- Select the type of exemption below that applies and provide an explanation of the selection, including maps or other applicable documentation. Additional documentation may be requested by County staff.

**Exemption Type** per BMPDM Figure 1-2 (select one)

☐ a. The proposed project will discharge runoff directly to existing underground storm drains discharging directly to water storage reservoirs, lakes, enclosed embayments, or the Pacific Ocean.

☐ b. The proposed project will discharge runoff directly to conveyance channels whose bed and bank are concrete lined all the way from the point of discharge to water storage reservoirs, lakes, enclosed embayments, or the Pacific Ocean.

☒ c. The proposed project will discharge runoff directly to an area identified by the County as appropriate for an exemption by the WMAA for the watershed in which the project resides[2].

**Explanation** (add or attach pages as necessary)

**Per the San Luis Rey River Water Quality Improvement Plan (updated March 2016), a portion of the project is exempt from hydromodification where runoff directly discharges to San Luis Rey River. The two project outfalls for Basins 2A-2G and 2I have outlet inverts that are below the 10-year water surface elevation per the Floodplain Study for Ocean Breeze Ranch prepared by Chang Consultants. Note that Basin 2A has two outlets, a low flow outlet and a high flow outlet, but the 10-year flow outlets through the low flow outlet (the 18-inch RCP), which has an outlet below the 10-year water surface elevation of the San Luis Rey River. The 10-year hydrograph routing Pondpack model output is included in this appendix. Also note that the double pipe storm drain (Line A1) draining Basins 2C-2G and 2I outlets to a concrete channel that extends to an outlet elevation below the 10-year water surface elevation of the San Luis Rey River. POC 2H is also exempt from hydromodification compliance because the pipe outlet is below the 100-year water surface elevation of the San Luis Rey River. The outlet of Basin 2H includes a headwall with a riprap pad to slow velocities. A WSPG hydraulic model was developed to show non erosive velocities with 10-year flows existing the rip rap pad. The velocities are below 5 fps and are expected to be non-erosive through the geomorphically significant range of flows. An exhibit for this WSPG/HMP Exemption analysis is included in this Attachment. Due to the slope of the ground beyond the riprap and towards the 10-year river limits, there is minimal erosion potential, and therefore, the POC can be considered exempt from hydromodification requirements.**

[2] This option must include an analysis of the project using the methodology presented in Attachment E of the Regional Watershed Management Area Analysis.

# San Luis Rey Watershed Management Area
## HU 903.00, 559 mi2

**Legend**

- Watershed Boundaries
- Municipal Boundaries
- Regional WMAA Streams
- **Exempt Bodies:** Water Storage Reservoirs, Lakes, Enclosed Embayments, Pacific Ocean, Buena Vista Lagoon
- **Exempt River Reaches:** Reaches of San Luis Rey River, San Dieguito River, San Diego River, Forester Creek, Sweetwater River, Otay River
- **Exempt Conveyance Systems:** Existing underground storm drains or conveyance channels whose bed and bank are concrete-lined, discharging directly to exempt water bodies, exempt rivers, or localized areas of Agua Hedionda Lagoon and Batiquitos Lagoon

Santa Margarita River
San Luis Rey River
San Luis Rey River
S.D. COUNTY
OCEANSIDE
Buena Vista Creek
VISTA
Agua Hedionda Creek
SAN MARCOS
CARLSBAD
San Marcos Creek
Escondido Creek
Santa Ysabel Creek
S.D. COUNTY
ENCINITAS
San Dieguito River
SAN DIEGO
San Dieguito Lusardi Creek
POWAY

Key Map (Not to Scale)

Aerial Imagery Source: DigitalGlobe, 06/2012

0 4.5 9 18 Miles

NORTH

# Receiving Waters and Conveyance Systems Exempt from Hydromodification Management Requirements

**Exhibit Date: Sept. 8, 2014**

Geosyntec consultants | RICK Engineering Company

### *3.3.2 HYDROMODIFICATION EXEMPTIONS*

Hydromodification, which is caused by both altered stormwater flow and altered sediment flow regimes, is largely responsible for degradation of creeks, streams, and associated habitats in the San Diego Region. The purpose of the hydromodification management requirements in the Permit is to maintain or restore more natural hydrologic flow regimes to prevent accelerated, unnatural erosion in downstream receiving waters.

In some cases, priority development projects may be exempt from hydromodification management requirements if the project site discharges runoff to receiving waters that are not susceptible to erosion (e.g., a lake, bay, or the Pacific Ocean) either directly or via hardened systems including concrete-lined channels or existing underground storm drain systems.

The March 2011 Final Hydromodification Management Plan (HMP) identified certain exemptions from hydromodification management requirements by presenting "HMP applicability criteria." The Permit maintains some of these HMP applicability criteria. However, some of the applicability criteria are not included under the Permit unless the area or receiving water is mapped in the WMAA. Based on the results of the WMAA, the following exemptions from hydromodification management are proposed for the watershed:

Receiving waters that are exempt based on the Permit include:

- The Pacific Ocean
- Lakes and Reservoirs
- Existing underground storm drains or concrete-lined channels draining directly to the ocean. These systems may not represent all discharges to exempt bodies or rivers. Additional systems may be considered exempt if there is no evidence of erosion at the storm drain outfall of the conveyance system, and any other criteria determined by the local jurisdiction.

Receiving waters or conveyance systems that are recommended exempt in the watershed based on studies that were prepared as part of the Regional WMAA include:

- San Luis Rey River from Pacific Ocean to upstream river limit of Basin Plan subwatershed 903.1 upstream of Bonsall and near Interstate 15;
- Existing underground storm drains or concrete-lined channels discharging directly to the recommended exempt reach of the San Luis Rey River. These systems were identified based on storm drain data provided by the Copermittees via the data call. These systems may not represent all discharges to exempt bodies or rivers. Additional systems may be considered exempt if there is no evidence of erosion at the storm drain outfall of the conveyance system, and any other criteria determined by the local jurisdiction.

POC 2B
IE=190.04 <= 10 YR
WSE, HYDROMOD
EXEMPT

BASIN
2B

SAN LUIS REY
RIVER PROPOSED
100-YEAR
FLOODPLAIN PER
CHANG STUDY

LOW FLOW
OUTLET

POC 2A
IE=182.0 <= 10 YR
WSE, HYDROMOD
EXEMPT

CONCRETE
CHANNEL

BASIN
2A

STREET A
STREET B
STREET C
STREET D
STREET E
STREET F
STREET G
STREET H
STREET I
STREET J

N

80 40 0 80 160 240
SCALE: 1"=80'

| | |
|---|---|
| SCALE: | 1"= 80' |
| JOB #: | 4192.10 |
| CREATED: | 6/8/23 |

PREPARED BY:

PROJECT DESIGN CONSULTANTS
Planning | Landscape Architecture | Engineering | Survey

701 B Street, Suite 800
San Diego, CA 92101
619.235.6471 Tel
619.234.0349 Fax

**COUNTY OF SAN DIEGO**

**OCEAN BREEZE RANCH**

*HYDROMOD EXEMPTION MAP*
*SWQMP ATTACHMENT 9.1*
*EXHIBIT 1 OF 2*

File Name: \\Ca--sand--gfe--vn\tastdata\TALONFAST_CORE\TALONFAST-SRV\acquisitions\CA-SAND-PD\Projects\4192.10\Engr\Reports\SWQMP-FE\ATTACHMENTS\A9- MANAGEMENT OF CCSYAs\Att 9.1-hydromod exemption\Hydromod Exempt Map.dwg, Date Last Saved 7/5/2023 5:46:08 PM, Date Plotted Last 11/7/2024 10:43:31 AM

POC 2A
IE=182.0 <= 10 YR
WSE, HYDROMOD
EXEMPT

CONCRETE
CHANNEL

POC #2H
OUTLET
ELEV=184.00

*HYDROMOD EXEMPT*
*100 YEAR WSE = 184.1*

West Lilac Road

WEST LILAC ROAD

N

40 20 0 40 80 120
SCALE: 1"=40'

| | |
|---|---|
| SCALE: | 1"= 40' |
| JOB #: | 4192.10 |
| CREATED: | 6/8/23 |

PREPARED BY:

**PROJECT DESIGN CONSULTANTS**
Planning | Landscape Architecture | Engineering | Survey

701 B Street, Suite 800
San Diego, CA 92101
619.235.6471 Tel
619.234.0349 Fax

**COUNTY OF SAN DIEGO**
**OCEAN BREEZE RANCH**
*HYDROMOD EXEMPTION MAP*
*SWQMP ATTACHMENT 9.1*
*EXHIBIT 2 OF 2*

File Name: \\Ca-sand-gfe-wn\rastdata\TALONFAST_CORE\TALONFAST-SRV\acquisitions\CA-SAND-PD\Projects\4192.10\Engr\Reports\SWQMP-PE\ATTACHMENTS\A9- MANAGEMENT OF CCSYAs\Att 9.1-hydromod exemption\Hydromod Exempt Map.dwg, Date Last Saved 7/5/2023 5:46:08 PM, Date Plotted Last 11/7/2024 10:48:30 AM

# Proposed Model from Chang Study dated May 22, 2019

HEC-RAS Plan: Prop Cond River: SLR River Reach: 1

| Reach | River Sta | Profile | Q Total | Min Ch El | W.S. Elev | Crit W.S. | E.G. Elev | E.G. Slope | Vel Chnl | Flow Area | Top Width | Froude # Chl |
|---|---|---|---|---|---|---|---|---|---|---|---|---|
| | | | (cfs) | (ft) | (ft) | (ft) | (ft) | (ft/ft) | (ft/s) | (sq ft) | (ft) | |
| 1 | 16930 | 100-yr FP | 41000.00 | 232.30 | 238.12 | 238.12 | 239.69 | 0.006765 | 10.68 | 4340.59 | 1438.98 | 0.91 |
| 1 | 16930 | 10-yr FP | 5000.00 | 232.30 | 234.57 | 234.57 | 235.19 | 0.012519 | 6.33 | 795.02 | 657.17 | 1.01 |
| | | | | | | | | | | | | |
| 1 | 17.090 | 100-yr FP | 41000.00 | 220.50 | 236.44 | | 236.97 | 0.002838 | 5.76 | 7064.98 | 1616.52 | 0.28 |
| 1 | 17.090 | 10-yr FP | 5000.00 | 220.50 | 227.13 | | 227.37 | 0.005702 | 3.92 | 1275.17 | 272.50 | 0.32 |
| | | | | | | | | | | | | |
| 1 | 16.984 | 100-yr FP | 41000.00 | 216.17 | 234.24 | | 235.04 | 0.004145 | 7.25 | 6017.36 | 1569.29 | 0.33 |
| 1 | 16.984 | 10-yr FP | 5000.00 | 216.17 | 224.45 | | 224.68 | 0.004081 | 3.87 | 1291.33 | 240.39 | 0.28 |
| | | | | | | | | | | | | |
| 1 | 16.882 | 100-yr FP | 41000.00 | 214.28 | 232.21 | | 232.84 | 0.003816 | 6.76 | 6981.12 | 1883.14 | 0.31 |
| 1 | 16.882 | 10-yr FP | 5000.00 | 214.28 | 222.43 | | 222.58 | 0.003635 | 3.12 | 1603.34 | 342.37 | 0.25 |
| | | | | | | | | | | | | |
| 1 | 16.779 | 100-yr FP | 41000.00 | 210.71 | 229.46 | | 230.33 | 0.005492 | 7.75 | 5693.04 | 2056.00 | 0.37 |
| 1 | 16.779 | 10-yr FP | 5000.00 | 210.71 | 220.05 | | 220.23 | 0.005176 | 3.40 | 1472.16 | 360.30 | 0.30 |
| | | | | | | | | | | | | |
| 1 | 16.682 | 100-yr FP | 41000.00 | 211.26 | 227.37 | | 227.98 | 0.003694 | 6.44 | 6807.00 | 1944.18 | 0.31 |
| 1 | 16.682 | 10-yr FP | 5000.00 | 211.26 | 218.44 | | 218.54 | 0.002255 | 2.50 | 1999.04 | 416.09 | 0.20 |
| | | | | | | | | | | | | |
| 1 | 16.573 | 100-yr FP | 41000.00 | 209.61 | 224.86 | | 225.52 | 0.004918 | 7.08 | 7051.37 | 1765.64 | 0.36 |
| 1 | 16.573 | 10-yr FP | 5000.00 | 209.61 | 216.66 | | 216.82 | 0.004112 | 3.20 | 1561.48 | 360.54 | 0.27 |
| | | | | | | | | | | | | |
| 1 | 16.499 | 100-yr FP | 41000.00 | 208.63 | 223.29 | | 223.79 | 0.003714 | 5.84 | 7503.47 | 1569.11 | 0.30 |
| 1 | 16.499 | 10-yr FP | 5000.00 | 208.63 | 215.13 | | 215.24 | 0.003946 | 2.70 | 1852.73 | 527.34 | 0.25 |
| | | | | | | | | | | | | |
| 1 | 16.430 | 100-yr FP | 41000.00 | 207.82 | 221.99 | | 222.47 | 0.003454 | 5.67 | 7620.01 | 1282.24 | 0.29 |
| 1 | 16.430 | 10-yr FP | 5000.00 | 207.82 | 213.98 | | 214.06 | 0.002658 | 2.34 | 2138.15 | 559.15 | 0.21 |
| | | | | | | | | | | | | |
| 1 | 16.385 | 100-yr FP | 41000.00 | 207.27 | 221.25 | | 221.69 | 0.003050 | 5.50 | 7873.51 | 1285.13 | 0.28 |
| 1 | 16.385 | 10-yr FP | 5000.00 | 207.27 | 213.37 | | 213.46 | 0.002452 | 2.33 | 2143.24 | 548.14 | 0.21 |
| | | | | | | | | | | | | |
| 1 | 16.337 | 100-yr FP | 41000.00 | 206.60 | 220.20 | | 220.76 | 0.004433 | 6.31 | 7126.53 | 1466.07 | 0.33 |
| 1 | 16.337 | 10-yr FP | 5000.00 | 206.60 | 212.63 | | 212.74 | 0.003323 | 2.65 | 1892.49 | 502.30 | 0.24 |
| | | | | | | | | | | | | |
| 1 | 16.291 | 100-yr FP | 41000.00 | 206.04 | 219.46 | | 219.80 | 0.003048 | 5.31 | 9647.93 | 1611.64 | 0.27 |
| 1 | 16.291 | 10-yr FP | 5000.00 | 206.04 | 211.86 | | 211.97 | 0.003052 | 2.67 | 2069.66 | 740.27 | 0.23 |
| | | | | | | | | | | | | |
| 1 | 16.246 | 100-yr FP | 41000.00 | 205.69 | 218.94 | | 219.17 | 0.002115 | 4.48 | 11407.02 | 1821.24 | 0.23 |
| 1 | 16.246 | 10-yr FP | 5000.00 | 205.69 | 211.29 | | 211.36 | 0.002108 | 2.29 | 2505.16 | 850.80 | 0.19 |
| | | | | | | | | | | | | |

HEC-RAS Plan: Prop Cond River: SLR River Reach: 1 (Continued)

| Reach | River Sta | Profile | Q Total | Min Ch El | W.S. Elev | Crit W.S. | E.G. Elev | E.G. Slope | Vel Chnl | Flow Area | Top Width | Froude # Chl |
|---|---|---|---|---|---|---|---|---|---|---|---|---|
| | | | (cfs) | (ft) | (ft) | (ft) | (ft) | (ft/ft) | (ft/s) | (sq ft) | (ft) | |
| 1 | 16.155 | 100-yr FP | 41000.00 | 204.78 | 217.36 | | 217.82 | 0.003780 | 5.62 | 8145.08 | 1937.25 | 0.30 |
| 1 | 16.155 | 10-yr FP | 5000.00 | 204.78 | 210.25 | | 210.32 | 0.002226 | 2.14 | 2339.91 | 625.35 | 0.19 |
| | | | | | | | | | | | | |
| 1 | 16.070 | 100-yr FP | 41000.00 | 203.60 | 216.40 | | 216.61 | 0.001769 | 3.80 | 11905.60 | 2660.75 | 0.20 |
| 1 | 16.070 | 10-yr FP | 5000.00 | 203.60 | 209.66 | | 209.69 | 0.000931 | 1.44 | 3461.33 | 848.65 | 0.13 |
| | | | | | | | | | | | | |
| 1 | 15.977 | 100-yr FP | 41000.00 | 202.55 | 215.50 | | 215.71 | 0.001846 | 3.69 | 11246.42 | 2991.20 | 0.21 |
| 1 | 15.977 | 10-yr FP | 5000.00 | 202.55 | 209.00 | | 209.06 | 0.001828 | 1.90 | 2634.46 | 711.90 | 0.17 |
| | | | | | | | | | | | | |
| 1 | 15.883 | 100-yr FP | 41000.00 | 201.83 | 214.24 | | 214.54 | 0.003070 | 4.37 | 9391.19 | 2992.00 | 0.26 |
| 1 | 15.883 | 10-yr FP | 5000.00 | 201.83 | 207.68 | | 207.80 | 0.003769 | 2.72 | 1837.67 | 531.78 | 0.25 |
| | | | | | | | | | | | | |
| 1 | 15.780 | 100-yr FP | 41000.00 | 200.68 | 212.31 | | 212.66 | 0.003854 | 5.18 | 9439.84 | 3232.96 | 0.30 |
| 1 | 15.780 | 10-yr FP | 5000.00 | 200.68 | 205.75 | | 205.83 | 0.003417 | 2.37 | 2112.09 | 1005.47 | 0.23 |
| | | | | | | | | | | | | |
| 1 | 15.677 | 100-yr FP | 41000.00 | 198.94 | 210.19 | | 210.52 | 0.003940 | 4.84 | 9880.17 | 2499.62 | 0.29 |
| 1 | 15.677 | 10-yr FP | 5000.00 | 198.94 | 203.52 | | 203.62 | 0.004890 | 2.58 | 1941.50 | 694.33 | 0.27 |
| | | | | | | | | | | | | |
| 1 | 15.580 | 100-yr FP | 41000.00 | 196.65 | 208.91 | | 209.06 | 0.002051 | 3.47 | 13806.07 | 3191.68 | 0.19 |
| 1 | 15.580 | 10-yr FP | 5000.00 | 196.65 | 202.16 | | 202.20 | 0.001738 | 1.62 | 3080.86 | 829.96 | 0.15 |
| | | | | | | | | | | | | |
| 1 | 15.482 | 100-yr FP | 41000.00 | 196.00 | 207.70 | | 207.85 | 0.002610 | 3.25 | 14009.65 | 3182.33 | 0.20 |
| 1 | 15.482 | 10-yr FP | 5000.00 | 196.00 | 200.56 | | 200.65 | 0.006397 | 2.37 | 2105.86 | 878.04 | 0.27 |
| | | | | | | | | | | | | |
| 1 | 15.389 | 100-yr FP | 41000.00 | 191.73 | 206.38 | | 206.55 | 0.002677 | 3.30 | 12738.55 | 2961.96 | 0.20 |
| 1 | 15.389 | 10-yr FP | 5000.00 | 191.73 | 199.31 | | 199.34 | 0.001423 | 1.48 | 3374.15 | 993.69 | 0.13 |
| | | | | | | | | | | | | |
| 1 | 15.324 | 100-yr FP | 41000.00 | 191.35 | 205.40 | | 205.55 | 0.003160 | 3.24 | 12878.44 | 2187.99 | 0.20 |
| 1 | 15.324 | 10-yr FP | 5000.00 | 191.35 | 198.54 | | 198.59 | 0.003801 | 1.86 | 2691.29 | 1109.53 | 0.20 |
| | | | | | | | | | | | | |
| 1 | 15.298 | 100-yr FP | 41000.00 | 190.31 | 204.85 | | 205.02 | 0.003423 | 3.24 | 12280.64 | 2577.61 | 0.19 |
| 1 | 15.298 | 10-yr FP | 5000.00 | 190.31 | 197.88 | | 197.94 | 0.006005 | 1.99 | 2515.08 | 842.76 | 0.20 |
| | | | | | | | | | | | | |
| 1 | 15.190 | 100-yr FP | 41000.00 | 188.32 | 202.65 | | 202.90 | 0.003588 | 3.80 | 11500.99 | 2771.04 | 0.20 |
| 1 | 15.190 | 10-yr FP | 5000.00 | 188.32 | 195.95 | | 195.99 | 0.002192 | 1.68 | 2981.62 | 609.09 | 0.13 |
| | | | | | | | | | | | | |
| 1 | 15.086 | 100-yr FP | 41000.00 | 187.80 | 200.88 | | 201.10 | 0.002941 | 3.46 | 11712.22 | 2564.25 | 0.18 |
| 1 | 15.086 | 10-yr FP | 5000.00 | 187.80 | 194.68 | | 194.74 | 0.002378 | 1.89 | 2907.89 | 700.64 | 0.14 |
| | | | | | | | | | | | | |

HEC-RAS Plan: Prop Cond River: SLR River Reach: 1 (Continued)

| Reach | River Sta | Profile | Q Total | Min Ch El | W.S. Elev | Crit W.S. | E.G. Elev | E.G. Slope | Vel Chnl | Flow Area | Top Width | Froude # Chl |
|---|---|---|---|---|---|---|---|---|---|---|---|---|
| | | | (cfs) | (ft) | (ft) | (ft) | (ft) | (ft/ft) | (ft/s) | (sq ft) | (ft) | |
| 1 | 14.987 | 100-yr FP | 41000.00 | 187.80 | 198.93 | | 199.22 | 0.004563 | 4.06 | 9806.80 | 2501.36 | 0.22 |
| 1 | 14.987 | 10-yr FP | 5000.00 | 187.80 | 193.37 | | 193.43 | 0.002625 | 1.85 | 2709.75 | 560.85 | 0.15 |
| | | | | | | | | | | | | |
| 1 | 14.890 | 100-yr FP | 41000.00 | 185.50 | 197.47 | | 197.71 | 0.002065 | 3.14 | 11456.95 | 2391.67 | 0.18 |
| 1 | 14.890 | 10-yr FP | 5000.00 | 185.50 | 191.88 | | 191.96 | 0.003133 | 2.30 | 2175.32 | 477.10 | 0.19 |
| | | | | | | | | | | | | |
| 1 | 14.789 | 100-yr FP | 41000.00 | 183.50 | 196.23 | | 196.55 | 0.002310 | 3.53 | 9981.60 | 1897.09 | 0.19 |
| 1 | 14.789 | 10-yr FP | 5000.00 | 183.50 | 190.73 | | 190.79 | 0.001626 | 1.87 | 2697.55 | 619.50 | 0.14 |
| | | | | | | | | | | | | |
| 1 | 14.690 | 100-yr FP | 41000.00 | 181.90 | 194.61 | | 195.07 | 0.003209 | 3.97 | 8293.84 | 1793.56 | 0.22 |
| 1 | 14.690 | 10-yr FP | 5000.00 | 181.90 | 189.55 | | 189.66 | 0.002940 | 2.67 | 1896.69 | 446.82 | 0.19 |
| | | | | | | | | | | | | |
| 1 | 14.583 | 100-yr FP | 41000.00 | 180.00 | 192.69 | | 193.02 | 0.003834 | 4.18 | 9060.68 | 1895.64 | 0.24 |
| 1 | 14.583 | 10-yr FP | 5000.00 | 180.00 | 187.68 | | 187.79 | 0.003702 | 2.70 | 1940.48 | 548.71 | 0.21 |
| | | | | | | | | | | | | |
| 1 | 14.477 | 100-yr FP | 41000.00 | 178.00 | 190.66 | | 190.98 | 0.003398 | 4.12 | 9087.10 | 1946.62 | 0.23 |
| 1 | 14.477 | 10-yr FP | 5000.00 | 178.00 | 185.90 | | 185.99 | 0.002782 | 2.51 | 2172.48 | 677.21 | 0.19 |
| | | | | | | | | | | | | |
| 1 | 14.322 | 100-yr FP | 41000.00 | 176.12 | 187.83 | | 188.21 | 0.003432 | 4.01 | 8441.40 | 2327.03 | 0.23 |
| 1 | 14.322 | 10-yr FP | 5000.00 | 176.12 | 183.24 | | 183.37 | 0.003749 | 2.86 | 1782.75 | 538.02 | 0.21 |
| | | | | | | | | | | | | |
| 1 | 14.215 | 100-yr FP | 41000.00 | 175.20 | 186.27 | | 186.54 | 0.002444 | 3.42 | 10046.73 | 2232.62 | 0.19 |
| 1 | 14.215 | 10-yr FP | 5000.00 | 175.20 | 181.65 | | 181.72 | 0.002293 | 2.24 | 2402.70 | 1036.82 | 0.17 |
| | | | | | | | | | | | | |
| 1 | 14.134 | 100-yr FP | 41000.00 | 173.77 | 185.01 | | 185.29 | 0.003664 | 4.15 | 9569.88 | 2183.90 | 0.24 |
| 1 | 14.134 | 10-yr FP | 5000.00 | 173.77 | 180.63 | | 180.71 | 0.002451 | 2.37 | 2318.26 | 1048.75 | 0.17 |
| | | | | | | | | | | | | |
| 1 | 14.053 | 100-yr FP | 41000.00 | 172.22 | 183.25 | | 183.62 | 0.004532 | 4.43 | 8437.42 | 1985.09 | 0.25 |
| 1 | 14.053 | 10-yr FP | 5000.00 | 172.22 | 179.80 | | 179.86 | 0.001680 | 2.15 | 2642.77 | 1282.09 | 0.15 |
| | | | | | | | | | | | | |
| 1 | 13.827 | 100-yr FP | 41000.00 | 175.90 | 181.72 | 179.42 | 182.07 | 0.002186 | 1.53 | 9233.96 | 2069.46 | 0.16 |
| 1 | 13.827 | 10-yr FP | 5000.00 | 175.90 | 177.31 | 177.31 | 177.72 | 0.024540 | 1.99 | 1002.09 | 1294.44 | 0.39 |

## 9.3 Resource Protection Ordinance (RPO) Methods (BMPDM Appendix H.1.1.1)

- Either of two Resource Protection Ordinance (RPO) methods may also be used to demonstrate compliance with CCSYA requirements. Select either option and document the selection below:

  ☒ **RPO Scenario 1: PDP is subject to and in compliance with RPO requirements**[5]

  - **Select** if the project requires one or more discretionary permits;
  - **Demonstrate** that onsite AND upstream offsite CCSYAs will be avoided and/or bypassed.

  ☐ **RPO Scenario 2: PDP is entirely exempt/not subject to RPO requirements**[6]

  - **Select** if the project does not require discretionary permits;
  - **Demonstrate** that all upstream offsite CCSYAs will be bypassed[7].

| **A. Mapping Results** -- At a minimum, show as applicable: (1) the project footprint, (2) areas of proposed development, (3) locations of onsite and upstream offsite CCSYAs, and (4) bypass of all identified CCSYAs. |
|---|
| Refer to CCSYA exhibit. Exhibit shows the project footprint and shows where areas of upstream CCSYAs are bypassed away from BMPs. Many of the steep slope areas are preserved. POCs 2A and 2B are exempt from hydromodification, so CCSYA requirement do not apply. The overall site is in compliance with RPO Steep Slope requirements, as the site complies with existing RPO encroachment allowances. |

[5] RPO applicability is normally confirmed during discretionary review. Check with your project manager if you're not sure of your status.
[6] Does not include PDPs utilizing exemption(s) via RPO Section 86.604(e)(2)(cc) or 86.604(e)(3).
[7] This scenario does not impose requirements for onsite CCSYAs.

**B. Explanation** -- Provide documentation as needed to demonstrate that (1) onsite CCSYAs are avoided and bypassed [if applicable], and (2) upstream offsite CCYSAs are effectively bypassed. Add pages as necessary.

**Upstream CCSYAs are bypassed, as shown on the exhibits.**

N

## LEGEND AND SUMMARY OF AREAS:

| | | |
|---|---|---|
| | TOTAL PROJECT AREA | = 1,402.52 ACRES |
| | RPO–SLOPES (>25% SLOPE WITH 50' VERTICAL RISE) | = 402.32 ACRES (28.69% OF TOTAL PROJECT AREA) |
| | IMPACTED AREAS BY LOTS | = 9.52 ACRES (2.37% OF RPO–SLOPE AREA) |
| | STEEP SLOPES IMPACTED BY ROADS WITH GRADING | = 14.60 ACRES (3.63% OF RPO–SLOPE AREA) |

LUIS REY RIVER

SAN LUIS REY RIVER

PLANNING AREA 3
PLANNING AREA 2
PLANNING AREA 1

POC 1A
POC 1B
POC 2A
POC 2B
POC 2H
POC 3A
POC 3B
POC 3C
POC 3D
POC 3E
POC 3F
POC 3G
POC 3H
POC 3J

1 12.539 ACRES
2 25.258 ACRES
3 0.153 ACRES
4 0.539 ACRES
5 2.916 ACRES
6 21.942 ACRES
7 0.064 ACRES
8 0.655 ACRES
9 0.875 ACRES
10 1.627 ACRES
11 0.229 ACRES
12 1.814 ACRES
13 2.545 ACRES
14 0.384 ACRES
15 0.115 ACRES
16 0.110 ACRES
17 0.124 ACRES
18 0.081 ACRES
19 0.082 ACRES
20 0.845 ACRES
21 0.468 ACRES
22 21.195 ACRES
23 0.084 ACRES
24 69.536 ACRES
25 0.071 ACRES
26 0.084 ACRES
27 0.071 ACRES
28 0.071 ACRES
29 0.084 ACRES
30 1.449 ACRES
31 4.288 ACRES
32 1.098 ACRES
33 0.162 ACRES
34 200.323 ACRES DEDUCT 1.612 ACRES NET 198.711 ACRES
35 22.972 ACRES
36 0.364 ACRES
37 0.458 ACRES
38 0.617 ACRES

NORMAN L. SULLIVAN MIDDLE SCHOOL

PREPARED BY:


PROJECT DESIGN CONSULTANTS
Planning | Landscape Architecture | Engineering | Survey
701 B Street, Suite 800
San Diego, CA 92101
619.235.6471 Tel
619.234.0349 Fax


| | |
|---|---|
| SCALE: | 1" = 350' |
| JOB #: | 4192.10 |
| CREATED: | 5/18/20 |

**COUNTY OF SAN DIEGO**

**OCEAN BREEZE RANCH**

*Attachment 9.3*
*CCSYA Map*


O:\04-SAND-PD\Projects\4192.10\Engr\Reports\LSMGMP-FET\ATTACHMENTS\A3- MANAGEMENT OF CCSYAs\4192.10 – CCSYA.dwg, 5/22/2024 7:33:31 PM

# Attachment B
# RESOLUTION APPROVING PDS2016-TM-5615

RESOLUTION OF SAN DIEGO COUNTY )
BOARD OF SUPERVISORS )
CONDITIONALLY APPROVING )
TENTATIVE MAP NO. PDS2016-TM-5615 )

WHEREAS, Tentative Map No. PDS2016-TM-5615 proposing the division of property located at the intersection of West Lilac Road and Vessels Ranch Road and generally described as:

> Those portions of sections 14, 15, 20, 21, 22 and 23, township 10 south, range 3 west, San Bernardino meridian according to official plat thereof; together with a portion of Monserate Rancho according to Map thereof No. 821 and Map on file in the Office of the County Recorder of San Diego County Book 1, Page 108 of patents, all in the County of San Diego

was filed with the County of San Diego pursuant to the Subdivision Map Act and San Diego County Subdivision Ordinance on September 26, 2016; and

WHEREAS, on December 13, 2019, the Planning Commission of the County of San Diego pursuant to Section 81.306 of the San Diego County Subdivision Ordinance held a duly advertised public hearing on said Tentative Map and received for its consideration, documentation, written and oral testimony, recommendations from all affected public agencies, and heard from all interested parties present at said hearing; and

WHEREAS, the Planning Commission of the County of San Diego has determined that the conditions hereinafter enumerated are necessary to ensure that the subdivision and the improvement thereof will comply with the Subdivision Map Act and conform to all ordinances, plans, rules, standards, and improvement and design requirements of San Diego County.

IT IS RESOLVED, DETERMINED, AND ORDERED, that based on the findings, said Tentative Map is hereby approved subject to the following conditions:

**MAP EXPIRATION:** The approval of this Tentative Map Expires Thirty-Six (36) Months after the date of the approval of this Resolution at 4:00 P.M. Unless, prior to that date, an application for a Time Extension has been filed as provided by Section 81.313 of the County Subdivision Ordinance.

The approval of this Tentative Map shall become effective 30 days after the adoption of this Resolution. This approval Expires Thirty-Six (36) Months from said effective date at 4:00 P.M. unless, prior to that date, an application for a Time Extension has been filed as provided by Section 81.313 of the County Subdivision Ordinance.

all designated pathways. The Offer of Dedication shall be shown as accepted on the Final Map. **TIMING:** Prior to the approval of the first Final Map (irrespective of the Phase or unit number or ownership of the area covered by that Final Map) for Tentative Map 5615, the applicant shall offer to dedicate the trail easements to the County and show the designated pathways on the Final Map. **MONITORING:** The *[DGS, RP]* (DPR, TC] shall ensure the trail easements are offered for dedication and designated pathways are indicated on the map.

**44. DRNG#1–ONSITE & OFFSITE DRAINAGE IMPROVEMENTS**

**INTENT:** In order to promote orderly development and to comply with the Subdivision Ordinance Sec. 81.404 and to comply with the County Flood Damage Prevention Ordinance 10091 (Title 8, Division 11), County Watershed Protection Ordinance (WPO) No. 10410, County Code Section 67.801 et seq., and the County Resource Protection Ordinance (RPO) No. 9842, drainage improvements shall be completed. **DESCRIPTION OF REQUIREMENT:** Improve or agree to improve and provide security for drainage facilities and structures, Extended Detention Basins and Bioretention basins.

All drainage plan improvements shall be prepared and completed pursuant to the following ordinances and current standards: San Diego County Hydraulic Design Manual, San Diego County Hydrology Manual, County of San Diego Grading Ordinance, Zoning Ordinance Sections 5300 through 5500, County Resource Protection Ordinance (RPO) No. 9842, Community Trails Master Plan and Parkland Dedication Ordinance, and County Flood Damage Protection Ordinance 10091 (Title 8, Division 11), Low Impact Development (LID) and Hydromodification requirements and the Land Development Improvement Plan Checking Manual.

The improvements shall be completed within 24 months from the recordation of Final Map pursuant to Subdivision Ordinance Sec. 81.405. The execution of the agreements and acceptance of the securities shall be completed before the approval of any final map. **DOCUMENTATION:** The applicant shall complete the following:

a Process and obtain approval of Improvement Plans to improve Extended Detention Basins and Bioretention basins.

b. Provide Secured agreements require posting security in accordance with Subdivision Ordinance Sec. 81.408.

c. Pay all applicable inspection fees with [*DPW, PDCI*].

d. If the applicant is a representative, then a one of the following is required: a corporate certificate indicating those corporation officers authorized to sign for the corporation, or a partnership agreement recorded in this County indicating who is authorized to sign for the partnership.

**TIMING:** Prior to the approval of the first Final Map (irrespective of the Phase or unit number or ownership of the area covered by that Final Map), the plans, agreements, and securities shall be approved. **MONITORING:** The [*PDS, LDR*] [DPR TC, PP] shall review the plans for consistency with the condition and County Standards. Upon approval of the plans [*PDS, LDR*] shall request the required securities and improvement agreements. The securities and improvement agreements shall be approved by the Director of PDS.

**PLAN CONDITIONS NOTES: [DPW, PDS]. INTENT:** In order to implement the required mitigation measures which are the basis for approval of this project pursuant to the County Subdivision Ordinance Section 81.303, the condition notes shall be implemented on the grading and improvement plans and made conditions of the permit issuance. **DESCRIPTION OF REQUIREMENT:** The Grading and Improvement Plans shall include the following condition notes and made conditions of the issuance of said permit(s):

a. **NOTE**: Prior to construction, a Conditional Letter of Map Revision (CLOMR) is required to be processed through the County and FEMA for this project that would, upon construction, affect the hydrologic or hydraulic characteristics of a flooding source and thus result in the modification of the existing regulatory floodway, the effective Base Flood Elevations (BFEs), or the Special Flood Hazard Area (SFHA). The CLOMR does not revise an effective FEMA Flood Insurance Rate Map (FIRM), it indicates whether the project, if built as proposed, would be recognized by FEMA. A Letter of Map Revision (LOMR) issued by FEMA is required at record plan stage and is FEMA's modification to an effective FIRM.

b. **NOTE**: Any existing unpermitted work in the floodplain would need to be demonstrated as having been in place prior to the original floodplain mapping, be permitted as part of this project or be restored to pre-floodplain mapping condition.

c. **NOTE**: Changes to effective maps shall be made in writing by the County Flood Plan Administrator / Director of Public Works, official designated by County Chief Executive Officer (CEO).

**45. DRNG#2–LINES OF INUNDATION**

**INTENT:** In order to comply with Grading Ordinance No. 10179, Section 87.803 (38) and prevent future development in flood-prone areas the Lines of Inundation shall be shown on the map. **DESCRIPTION OF REQUIREMENT:** Lines of inundation to the limits of the 100–year flood along the watercourse, which flows through the property, shall be shown and labeled "Subject to Inundation By The 100–Year Flood" on the Final Map. Each parcel shall have a flood free building site to the satisfaction of the Director of PDS. If any of the parcels are found to be devoid of a buildable, flood free site for residential and commercial uses the subdivider shall take appropriate action so that each parcel does have a buildable

This form must be accepted by the County prior to the release of construction permits or granting of occupancy for applicable portions of a Priority Development Project (PDP). Its purpose is to provide documentation of the final installation of permanent Best Management Practices (BMPs) used to satisfy Structural Performance Standards for the development project. Compliance with these standards reduces the discharge of pollutants and flows from the completed project site. Applicable standards may be satisfied using Structural BMPs (S-BMPs), Significant Site Design BMPs (SSD-BMPs), or both. Applicants are responsible for providing all requested information.

## PART 1 PROJECT INFORMATION

| **A. Project Summary Information** | |
|---|---|
| ***Project Name*** | Ocean Breeze Ranch |
| ***Record ID*** (e.g. grading/improvement plan number, building permit) | PDS2020-LDGRMJ-30295<br>PDS2020-LDJIP-50085<br>PDS2020-LDJIP-50106 |
| ***Project Address*** | 5820 West Lilac Road, Bonsall, CA 92003 |
| ***Assessor's Parcel Number(s)*** APN(s) | 125-080-25, 125-080-26, 125-131-57, 127-191-21, 127-191-22 |
| ***Project Watershed*** (Hydrologic Unit, Area, and Subarea Name with Numeric Identifier) | San Luis Rey HU (903), Lower San Luis HA (903.1), Bonsall HSA (903.12) |
| **B. Owner Information** | |
| ***Name*** | Ocean Breeze Ranch, LLC. Attn. James Conrad |
| ***Address*** | 1550 SOUTH COAST HIGHWAY, SUITE 201, LAGUNA BEACH, CA 92651 |
| ***Email Address*** | jconradarc@gmail.com |
| ***Phone Number*** | 949-497-0200 |

| **COUNTY – OFFICIAL USE ONLY** | |
|---|---|
| **INTAKE ID#** | |
| **ACCEPTANCE ID#** | |

****THIS PAGE IS FOR PARTIAL VERIFICATIONS ONLY ****

If final grade release or granting of occupancy is being requested for only a portion of the Priority Development Project (PDP) please fill out the table below. Include ALL of the Structural BMPs and/or Significant Site Design BMPs for the entire project in the table. **Include a mark-up of the DMA map from the approved SWQMP with this Verification package that clearly shows which DMAs you are submitting for approval and which DMAs have already been accepted (if any).**

| DMA # | APN or Lot # | BMP ID # | WPP Acceptance Date (If applicable) | WPP Acceptance ID# (If applicable, e.g. 20/21-001) |
|---|---|---|---|---|
| | | | | |
| | | | | |
| | | | | |
| | | | | |
| | | | | |
| | | | | |
| | | | | |
| | | | | |
| | | | | |
| | | | | |
| | | | | |
| | | | | |
| | | | | |
| | | | | |
| | | | | |
| | | | | |
| | | | | |
| | | | | |
| | | | | |
| | | | | |
| | | | | |
| | | | | |
| | | | | |
| | | | | |

| | | | | |
|---|---|---|---|---|
| | | | | |
| | | | | |

## PART 2 BMP INVENTORY INFORMATION

Use this table to document Structural BMPs (S-BMPs) and Significant Site Design BMPs (SSD-BMPs) for the PDP. All DMAs that are not self-mitigating or de minimis must have at least one Structural BMP or Significant Site Design BMP.

- In **Part A** list all Structural BMPs (including both Pollutant Control and/or Hydromodification as applicable) by DMA.
- Complete **Part B** for all DMAs that contain only Significant Site Design BMPs. SSD-BMPs are Site Design BMPs (SD-BMPs) that are sized and constructed to satisfy Structural Performance Standards for a DMA.
- The information provided for each BMP in the table must match that provided in the Stormwater Quality Management Plan (SWQMP), construction plans, maintenance agreements, and other relevant project documentation.

| DMA # | BMP Information | | | Maintenance Category (1, 2, 3, or 4) | Maintenance Agreement Recorded DOC # | Construction Plan Sheet # | Landscape Plan Sheet # | FOR DPW-WPP USE ONLY |
|---|---|---|---|---|---|---|---|---|
| | Quantity | Description/Type of Structural BMP | BMP ID # | | | | | |
| **A. Structural BMPs (S-BMPs)** | | | | | | | | |
| 1 | 1 | LINED BIOFILTRATION (BF-1) | 1A | 2 | | | | |
| 20 | 1 | LINED BIOFILTRATION (BF-1) | 1B | 2 | | | | |
| 2 | 1 | LINED BIOFILTRATION (BF-1) | 2A | 2 | | | | |
| 3 | 1 | LINED BIOFILTRATION (BF-1) | 2B | 2 | | | | |
| 4A,B | 1 | LINED BIOFILTRATION (BF-1) | 2C | 2 | | | | |
| 5 | 1 | LINED BIOFILTRATION (BF-1) | 2D | 2 | | | | |
| Add rows as needed. Click into the last column in the row below this, then press TAB to add a new row. | | | | | | | | |
| 6 | 1 | LINED BIOFILTRATION (BF-1) | 2E | 2 | | | | |
| 7 | 1 | LINED BIOFILTRATION (BF-1) | 2F | 2 | | | | |
| 8 | 1 | LINED BIOFILTRATION (BF-1) | 2G | 2 | | | | |
| 18 | 1 | LINED BIOFILTRATION (BF-1) | 2H | 2h | | | | |
| 16 | 1 | LINED BIOFILTRATION (BF-1) | 2I | 2 | | | | |
| 9 | 1 | LINED BIOFILTRATION (BF-1) | 3A | 2 | | | | |
| 10 | 1 | LINED BIOFILTRATION (BF-1) | 3B | 2 | | | | |
| 11 | 1 | UNLINED BIOFILTRATION WITH PARTIAL RETENTION (PR-1) | 3C | 2 | | | | |
| 12 | 1 | LINED BIOFILTRATION (BF-1) | 3D | 2 | | | | |
| 13 | 1 | LINED BIOFILTRATION (BF-1) | 3E | 2 | | | | |

| | | | | | | | | |
|---|---|---|---|---|---|---|---|---|
| 14 | 1 | LINED BIOFILTRATION (BF-1) | 3F | 2 | | | | |
| 15 | 1 | LINED BIOFILTRATION (BF-1) | 3G | 2 | | | | |
| 21 | 1 | LINED BIOFILTRATION (BF-1) | 3H | 4 | | | | |
| 17 | 1 | LINED BIOFILTRATION (BF-1) | 3I | 1 | | | | |
| 22 | 1 | LINED BIOFILTRATION (BF-1) | 3J | 1 | | | | |
| 19 | 1 | LINED BIOFILTRATION (BF-1) | 3K | 1 | | | | |
| 1A-1 | 1 | PRETREATMENT BMP | 1A-1 | 2 | | | | |
| 1A-2 | 1 | PRETREATMENT BMP | 1A-2 | 2 | | | | |
| 1A-3 | 1 | PRETREATMENT BMP | 1A-3 | 2 | | | | |
| 1B-1 | 1 | PRETREATMENT BMP | 1B-1 | 2 | | | | |
| 2A-1 | 1 | PRETREATMENT BMP | 2A-1 | 2 | | | | |
| 2A-2 | 1 | PRETREATMENT BMP | 2A-2 | 2 | | | | |
| 2B-1 | 1 | PRETREATMENT BMP | 2B-1 | 2 | | | | |
| 2B-2 | 1 | PRETREATMENT BMP | 2B-1 | 2 | | | | |
| 2C-1 | 1 | PRETREATMENT BMP | 2C-1 | 2 | | | | |
| 2H-1 | 1 | PRETREATMENT BMP | 2H-1 | 2 | | | | |
| 3C-1 | 1 | PRETREATMENT BMP | 3C-1 | 2 | | | | |
| 3D-1 | 1 | PRETREATMENT BMP | 3D-1 | 2 | | | | |
| **B. Significant Site Design BMPs (SSD-BMPs)** | | | | | | | | |
| 84 | 1 | Dispersion Area | 84 | **N/A** | | | | |
| 85 | 1 | Dispersion Area | 85 | **N/A** | | | | |
| 86 | 1 | Dispersion Area | 86 | **N/A** | | | | |
| 87 | 1 | Dispersion Area | 87 | **N/A** | | | | |
| 88 | 1 | Dispersion Area | 88 | **N/A** | | | | |
| 89 | 1 | Dispersion Area | 89 | **N/A** | | | | |
| Add rows as needed. Click into the last column in the row below this, then press TAB to add a new row. | | | | | | | | |
| 90 | 1 | Dispersion Area | 90 | **N/A** | | | | |
| 92 | 1 | Dispersion Area | 92 | **N/A** | | | | |

## PART 3 REQUIRED ATTACHMENTS

**For the permanent BMPs listed in Part 2, submit the following to the County inspector along with this Verification form as a package (check all that are attached):**

☐ **PHOTOGRAPHS:** Final construction photos of every permanent BMP listed in Part 2 are required. Final photos must be recent and be labeled with the date and a BMP Identifier. Additional photographs illustrating proper construction of the BMPs are recommended to be included and may be requested by WPP prior to acceptance of this Verification (e.g. excavation depths, liners, hydromodification orifices, Biofiltration Soil Media (BSM), vegetation, mulch).

☐ **MAINTENANCE AGREEMENTS:** Copies of approved and recorded Storm Water Maintenance Agreements (SWMA), Category 1 Maintenance Notification Agreements (MN), or Encroachment Maintenance and Removal Agreements (EMRA) for all S-BMPs.

*Note: Significant Site Design (SSD) BMPs and most Category 4 BMPs do not require recorded maintenance agreements.*

☐ **CONSTRUCTION PLANS:** Submit electronic and/or 11" X 17" hard copies of the current approved Construction Plan sheets for the Record ID(s) listed on Page 1:

- ☐ Grading Plans
- ☐ Improvement Plans
- ☐ Precise Grading Plan
- ☐ Building Plan (Applicable BMP Sheets only)
- ☐ Other (Please specify) _____

For each Construction Plan, the sheets submitted must incorporate all of the following:

- A BMP Table on Sheet 1, AND
- A plan detail cross-section of each verified as-built BMP, AND
- The location of each verified as-built BMP

☐ **LANDSCAPE PLANS**: If the PDP includes vegetated BMPs and has a Landscape Plan, submit the following:

- ☐ Final Landscape Plans
- ☐ Proof of Irrigation Installed (if applicable)

## PART 4 PREPARER'S CERTIFICATION

By signing below, I certify that the BMP(s) listed in Part 2 of this Verification Form have been constructed and are in substantial conformance with the approved plans and applicable regulations. I understand the County reserves the right to inspect the above BMPs to verify compliance with the approved plans and Watershed Protection Ordinance (WPO). Should it be determined that the BMPs were not constructed to plan or code, corrective actions may be necessary before permits can be closed.

Note: Structural BMPs must be certified by a licensed professional engineer.

Please sign and, if applicable, provide your seal below.

| | |
|---|---|
| **Preparer's Name:** | |
| **Email Address:** | |
| **Phone Number:** | |
| **Preparer's Signature:** | |
| **Date:** | |

[SEAL]

**PROJECT RECORD ID**: _____

## COUNTY - OFFICIAL USE ONLY

**County Inspector Approval:**

***NOTE: The County approved SWQMP document and any Addendums or Revisions must be included with this BMP Installation Verification submittal package.**

- ☐ DPW Private Development Construction Inspection (PDCI)
- ☐ PDS Building
- ☐ DGS
- ☐ DPR

By signing below, the County Inspector concurs that every BMP listed in Part 2 of this BMP Installation Verification form has been installed per plan.

Inspector Name: _____

Inspector's Signature: _____ Date: _____

**DPW Watershed Protection Program (WPP) Acceptance:**

Date Received: _____

WPP Reviewer: _____

WPP Reviewer concurs that the BMPs accepted in **Part 2** above may be entered into County inventory.

WPP Reviewer's Signature: _____ Date: _____

*Enter Acceptance ID# on page 1.*

NOTES:

## 11.0 Cover Sheet and General Requirements

- All Structural BMPs must have a plan and mechanism to ensure on-going maintenance. Use the table below to document the types of agreements to be submitted for the PDP and submit them under cover of this sheet.
- See BMPDM Section 7.3 for a description of maintenance categories and responsibilities. Note that since Category 3 and 4 BMPs are County-maintained, they do not require maintenance agreements.

### a. Applicability of Maintenance Agreements

Check the boxes below to indicate which types of agreements are included with this attachment.

☐ **Maintenance Notification Agreement for Category 1 Stormwater Structural BMPs**

- Exhibit A: Project Site Map; and a Map for each BMP and its Drainage Management Area (DMA).
- Exhibit B: BMP Maintenance Plan (see below)

*CATEGORY 1 MAINTENANCE AGREEMENTS ARE RECORDED PRIOR TO OCCUPANCY.*

☒ **Storm Water Facilities Maintenance Agreement (SWMA) (Category 2 BMPs)**

- Exhibit A: Legal Description of Property
- Exhibit B: BMP Maintenance Program (see below)
- Exhibit C: BMP Locations

*CATEGORY 2 MAINTENANCE AGREEMENTS ARE RECORDED PRIOR TO PERMIT ISSUANCE.*

Maintenance agreement templates and instructions are available on the County's website: www.sandiegocounty.gov/stormwater under the Development Resources tab, Submittal Templates.

### b. Maintenance Plan Requirements

Maintenance plans should include the following:

☒ Specific **maintenance indicators and actions** for proposed structural BMP(s). These must be based on maintenance indicators presented in BMP Design Manual Fact Sheets in Appendix E and enhanced to reflect actual proposed components of the structural BMP(s).

☒ **Access** to inspect and perform maintenance on the structural BMP(s).

☒ Features to **facilitate inspection** (e.g., observation ports, cleanouts, silt posts, or other features that allow the inspector to view necessary components of the structural BMP and compare to maintenance thresholds).

☒ Manufacturer and part number for **proprietary parts** of structural BMP(s) when applicable.

☒ **Maintenance thresholds** specific to the structural BMP(s), with a location-specific frame of reference (e.g., level of accumulated materials that triggers removal of the materials, to be identified based on viewing marks on silt posts or measured with a survey rod with respect to a fixed benchmark within the BMP).

☒ Recommended **equipment** to perform maintenance.

☒ When applicable, necessary special **training or certification** requirements for inspection and maintenance personnel such as confined space entry or hazardous waste management.

**REQUEST AND INSTRUCTIONS FOR PREPARATION OF STORMWATER FACILITIES MAINTENANCE AGREEMENT**

Provide the following information, to enable PDS to prepare the "STORMWATER FACILITIES MAINTENANCE AGREEMENT, WITH EASEMENT AND COVENANTS":

| # | Done | Information to be Inserted |
|---|---|---|

[1] ☐ County staff document custodian to receive document after recording will be:

_____ _____

Name of Custodian Mail Stop

[2] ☒ Provide applicable Project **Reference Number(s)**:

| | |
|---|---|
| Tentative Map: | VTM 5615 |
| Tentative Parcel Map: | TPM_____ |
| Grading Plan / Grading Permit: | L- PDS2020-LDGRMJ-30295 |
| Major Use Permit: | MUP xx |
| Site Plan: | STP_____ |
| Subdivision Map: | PDS |
| Specific Plan: | xx |

[3] ☒ Provide EXACT **name of Owner** [This must be word-for-word, letter-for-letter identical to vesting title information]:

Ocean Breeze Ranch, LLC

Name of Owner

[4] ☒ Indicate the status of the Owner:

☐ a natural person; or

☒ a business entity.

If the Owner is a business entity, then please indicate what type ("a California Corporation", "a [other state] Corporation", "a California General Partnership", "a California Limited Partnership" or "a California Limited Liability Company"):

A California Limited Liability Company
Type of Owner's Business Entity

[5] ☒ Create and attach an "Exhibit A", which is an accurate Legal Description of the property involved in the entire project

[6] ☒ Provide brief Description of Type of Project [E.g. "a 100-unit residential subdivision"]:

A 381-unit single family residential subdivision , 14 estate lots, and 1 equestrian lot.
Project Description

[7] ☒ Provide official name, number and date of plan or drawing which shows the BMPs in detail ["Improvement Plans", "Site Plan", "Grading Plans" etc.]:

Rough Grading Plans — Type of Plan
PDS2020-LDGRMJ-30295 — Plan Number

[8] ☒ Create and attach an "Exhibit B", using the format of Attachment 2 ("BMP MAINTENANCE PROGRAM") as an example.

[9] ☒ Create and attach an "Exhibit C", which shows the locations of the installed BMPs.

[10] ☒ Provide Name and Address of the person who the Owner designates as his/her/its Agent for administration of the Agreement and receipt of notices:

Name: James Conrad

Address: 1550 South Coast Highway, Suite 201, Laguna Beach, 92651

[11] Advise us whether or not the project is a **Common Interest Development**:

☐ No ☒ Yes

[12] ☒ Provide the Name(s) and title(s) of **persons who will sign** agreement for the Owner:

James Conrad
Name

Title

If the Owner (see #3 above) is a natural person, County Counsel will assume that person will sign the agreement, and will so provide in the signature block. If the Owner is a business entity, please indicate the names and titles of all persons who will sign on behalf of the business entity.

A sample signature block for a corporation would look like:

"Clean Water, Inc., a California Corporation

By: _____ _____
John Q. Adams, President Date

By: _____ _____
Adam Q. Johns, Secretary Date"

# Maintenance Agreement Attachments

**EXHIBIT "A"**

**Legal Description for**

**OCEAN BREEZE RANCH**

PARCEL A: (APN: 124-150-34-00 AND 24-150-35-00)

THAT PORTION OF SECTIONS 11, 14, 15, 21 AND 22 TOWNSHIP 10 SOUTH, RANGE 3 WEST, SAN BERNARDINO MERIDIAN, ACCORDING TO THE OFFICIAL PLAT THEREOF, TOGETHER WITH A PORTION OF MONSERATE RANCHO ACCORDING TO MAP THEREOF NO. 821 AND MAP ON FILE IN THE OFFICE OF THE COUNTY RECORDER OF SAN DIEGO COUNTY AS RECORDED IN BOOK 1, PAGE 108 OF PATENTS, ALL IN THE COUNTY OF SAN DIEGO, STATE OF CALIFORNIA.

PARCEL B: (APN'S: 127-230-59-00, 127-191-20-00, 127-271-01-00, 127-271-02-00, 126-060-78-00, 125-131-49-00, 125-131-48-00, 125-131-54-00, 124-150-28-00, 124-150-34-00, 124-150-35-00 AND 125-080-21-00.

THOSE PORTIONS OF SECTIONS 11, 14, 15, 20, 21, 22 AND 23 TOWNSHIP 10 SOUTH, RANGE 3 WEST, SAN BERNARDINO MERIDIAN, ACCORDING TO THE OFFICIAL PLAT THEREOF, TOGETHER WITH A PORTION OF MONSERATE RANCHO ACCORDING TO MAP THEREOF NO. 821 AND MAP ON FILE IN THE OFFICE OF THE COUNTY RECORDER OF SAN DIEGO COUNTY AS RECORDED IN BOOK 1, PAGE 108 OF PATENTS, ALL IN THE COUNTY OF SAN DIEGO, STATE OF CALIFORNIA.

PARCEL C: (APN'S: 125-131-48-00, 125-131-54-00, 1125-080-21-00 AND 124-150-35-00)

THOSE PORTIONS OF SECTIONS 14 AND 15, TOWNSHIP 10 SOUTH, RANGE 3 WEST, SAN BERNARDINO MERIDIAN, ACCORDING TO THE OFFICIAL PLAT THEREOF, TOGETHER WITH A PORTION OF MONSERATE RANCHO ACCORDING TO MAP THEREOF NO. 821 AND MAP ON FILE IN THE OFFICE OF THE COUNTY RECORDER OF SAN DIEGO COUNTY AS RECORDED IN BOOK 1, PAGE 108 OF PATENTS, ALL IN THE COUNTY OF SAN DIEGO, STATE OF CALIFORNIA.

# EXHIBIT "B"

# BMP MAINTENANCE PLAN

**Maintenance of Biofiltration BMPs (Lined BF-1) and (Unlined PR-1):**

Inspection. Perform pre- and post-rainy season inspections as well as several inspections after significant storm events of the basins for sediment/trash accumulation, inlet and outlet structures, vegetation health, basin erosion and standing water in basins.

Typical Maintenance Indicators:

- Insufficient cover or patchy in appearance. Areas of bare earth are exposed, or mulch layer is less than 3 inches in depth.
- Trash and debris accumulated in area.
- Accumulation of sediment. (Overflow inlets should be at least 6 inches above bottom of basin).
- Poor vegetation establishment, overgrown vegetation, and presence of weeds.
- Erosion due to concentrated irrigation flow or storm water flow.
- Clogging at inlet and outlet structures.
- Standing water (beyond 96 hours after a rain event)

Maintenance Actions:

- Remove and replace with fresh mulch as needed.
- Remove and dispose of trash and debris properly.
- Remove and properly dispose of accumulated materials, without damage to the vegetation. Maintain integrity of side slopes.
- Re-seed, re-plant, or re-establish vegetation per original plans. Maintain vegetation health. Mow or trim vegetation as appropriate. Remove weeds.
- Inspect soil and repair/re-seed/re-plant eroded areas after big storm events or as needed. Repair energy dissipation (riprap).
- Clear obstructions causing clogging for inlet and outlet structures using drain snake.
- Make appropriate corrective measures such as adjusting irrigation system, removing obstructions of debris or invasive vegetation, unclogging perforated underdrain, loosening or replacing top soil to allow for better infiltration, or minor re-grading for proper drainage. If the issue is not corrected by restoring the BMP to the original plan and grade, the County shall be contacted prior to any additional repairs or reconstruction.

- Properly dispose of sediment/waste.

Equipment:

Equipment useful for maintenance activities would include, but is not limited to, suitable clothing, mowers, hand tools, rakes, shovels, loppers, buckets, wheelbarrows, drain snake, tape measurer, camera, etc.

**Pre-treatment Structure Maintenance (BMP 1A-1, 1A-2, 1A-3, 1B-1, 2A-1, 2A-2, 2B-1, 2B-2, 2C-1, 2H-1, 3C-1, 3D-1):**

Refer to the vendor's specific maintenance procedure manual. Below is a summary of maintenance items for Nutrient Separating Baffle Box:

Inspection:

Inspection a minimum of twice per year, but frequency may depend on site-specific sediment and trash generation.

Without entering unit, inspect the internal components for damage. Observe and quantify accumulation of debris, trash, and sediment in screened basket.

Maintenance:

Vacuum Truck. When required, use an extension on a vacuum truck to position the hose over the opened manhole or hatch opening. Remove floating trash, debris, and oils from water surface. Continue using the vacuum truck to completely dewater the structure through the vortex tubes and evacuate sediment from the sump. Dispose of material appropriately.

# EXHIBIT C-1

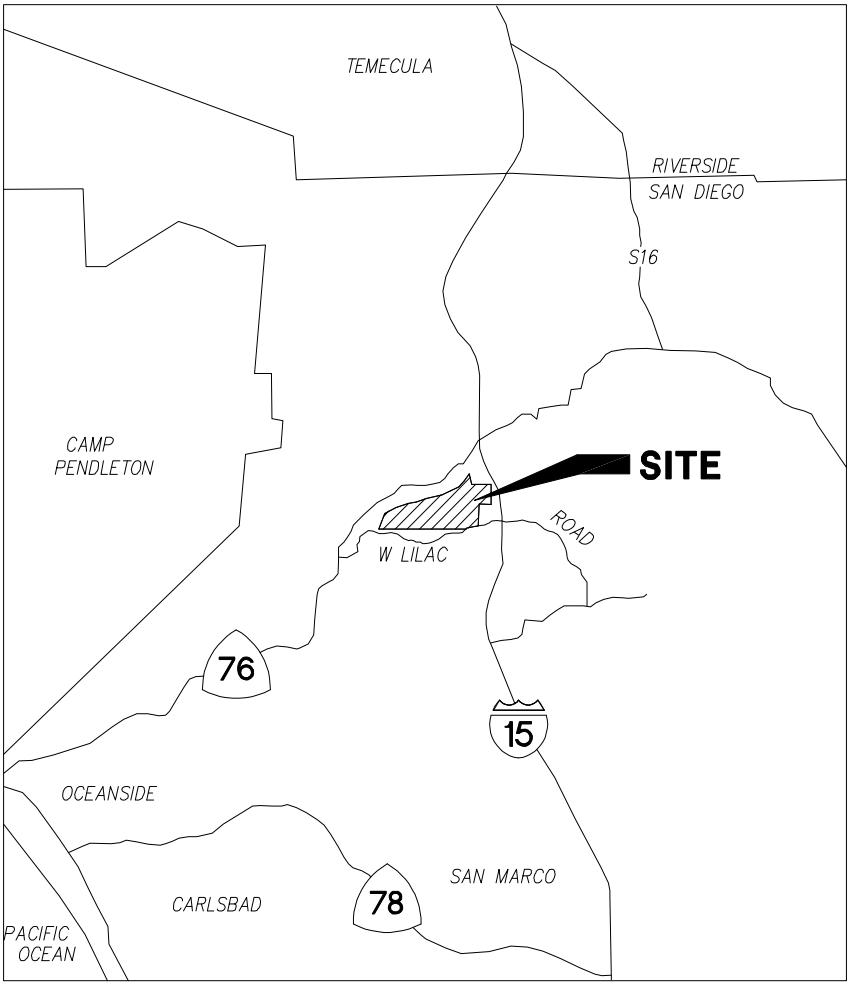
TEMECULA
RIVERSIDE
SAN DIEGO
S16
CAMP
PENDLETON
SITE
ROAD
W LILAC
76
15
OCEANSIDE
SAN MARCO
CARLSBAD
78
PACIFIC
OCEAN

## LEGEND:

DRAINAGE MANAGEMENT AREA

PROPOSED BMP

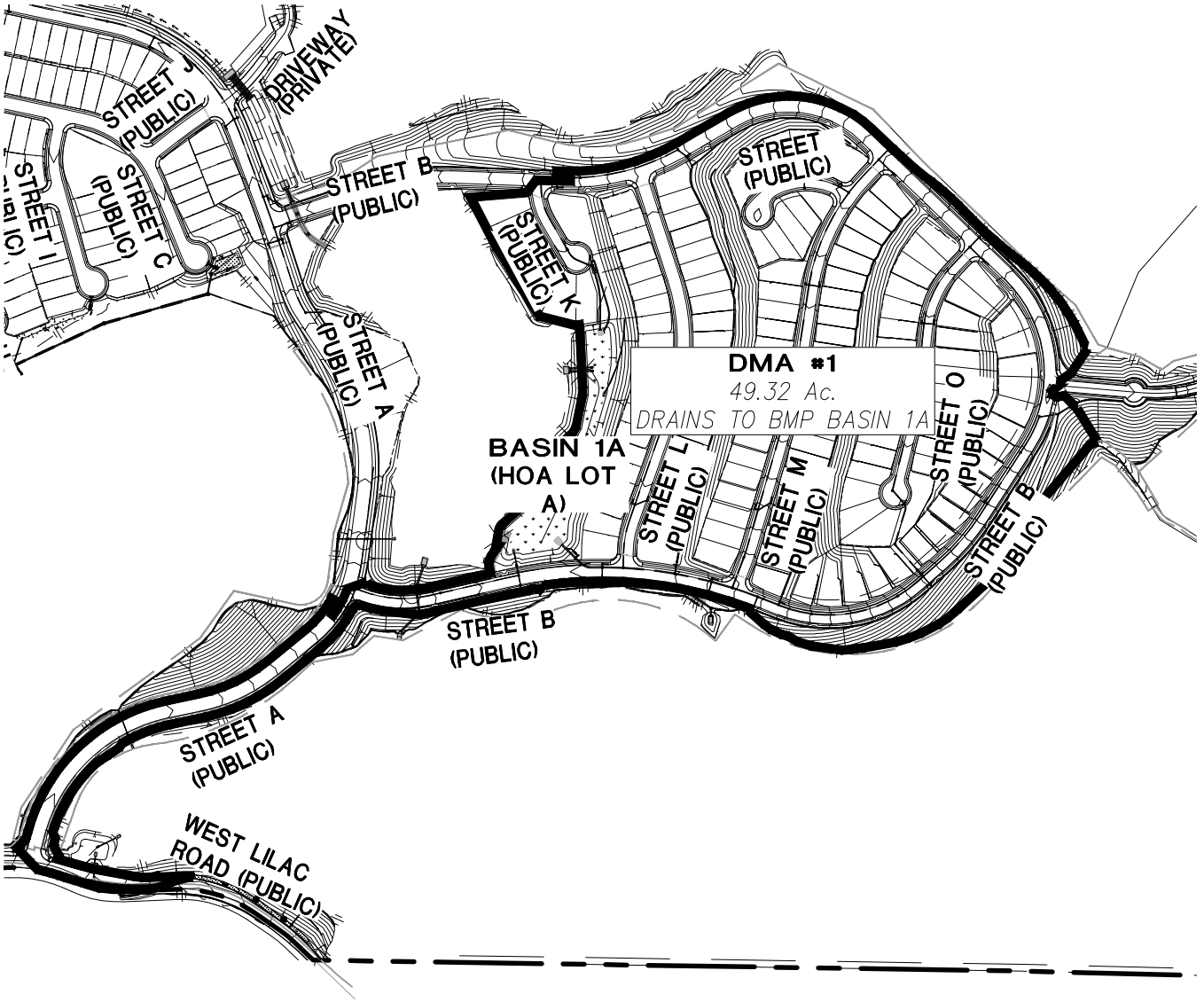


N

| | |
|---|---|
| SCALE: | 1"=500' |
| JOB #: | 4192.00 |
| CREATED: | 11/20/18 |

**COUNTY OF SAN DIEGO**

**OCEAN BREEZE RANCH**

***DMA MAPBOOK***
***DMA#1***

Q:\CA-SAND-PD\Projects\4192.10\Engr\Reports\SWQMP-FE\ATTACHMENTS\A2- DMA EXHIBITS & CONST. PLAN SHEETS\MAP BOOK\4192
DMA Mapbook - DMAs 1-8.dwg 11/7/2024 7:08:27 AM

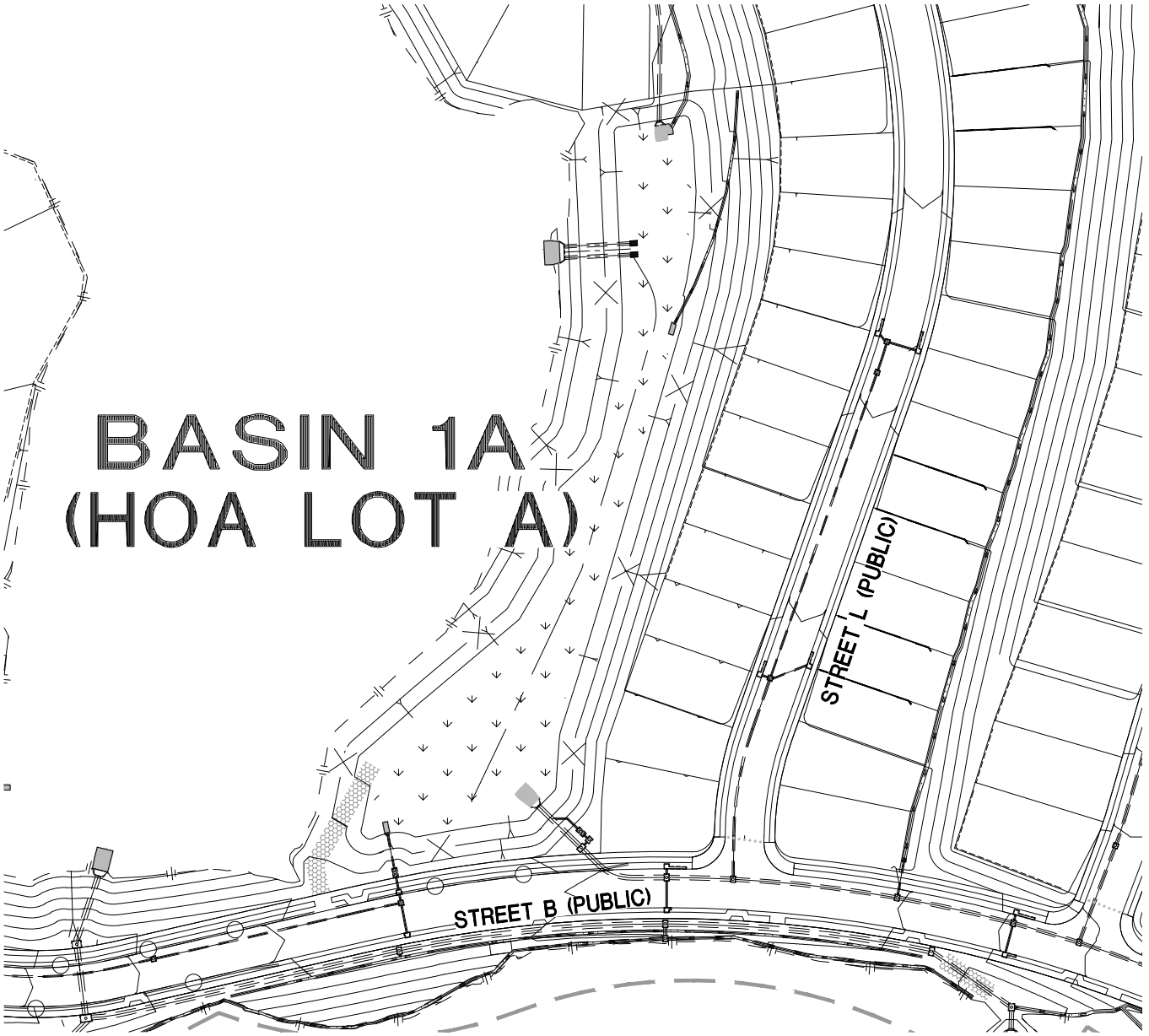


N

| | |
|---|---|
| SCALE: | 1"=150' |
| JOB #: | 4192.00 |
| CREATED: | 11/20/18 |

**COUNTY OF SAN DIEGO**

**OCEAN BREEZE RANCH**

***DMA MAPBOOK***
***BMP 1-A***

# LEGEND:

DRAINAGE MANAGEMENT AREA

PROPOSED BMP

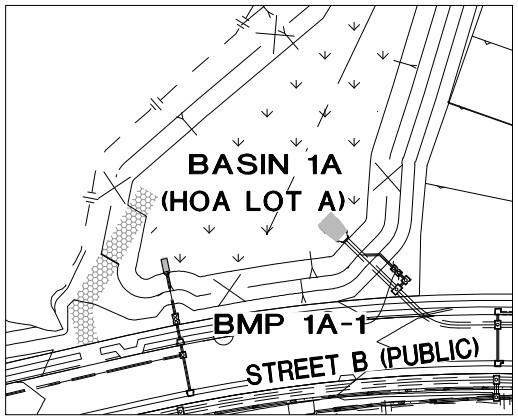


BMP 1A-1 DETAIL
SCALE 1"=150'

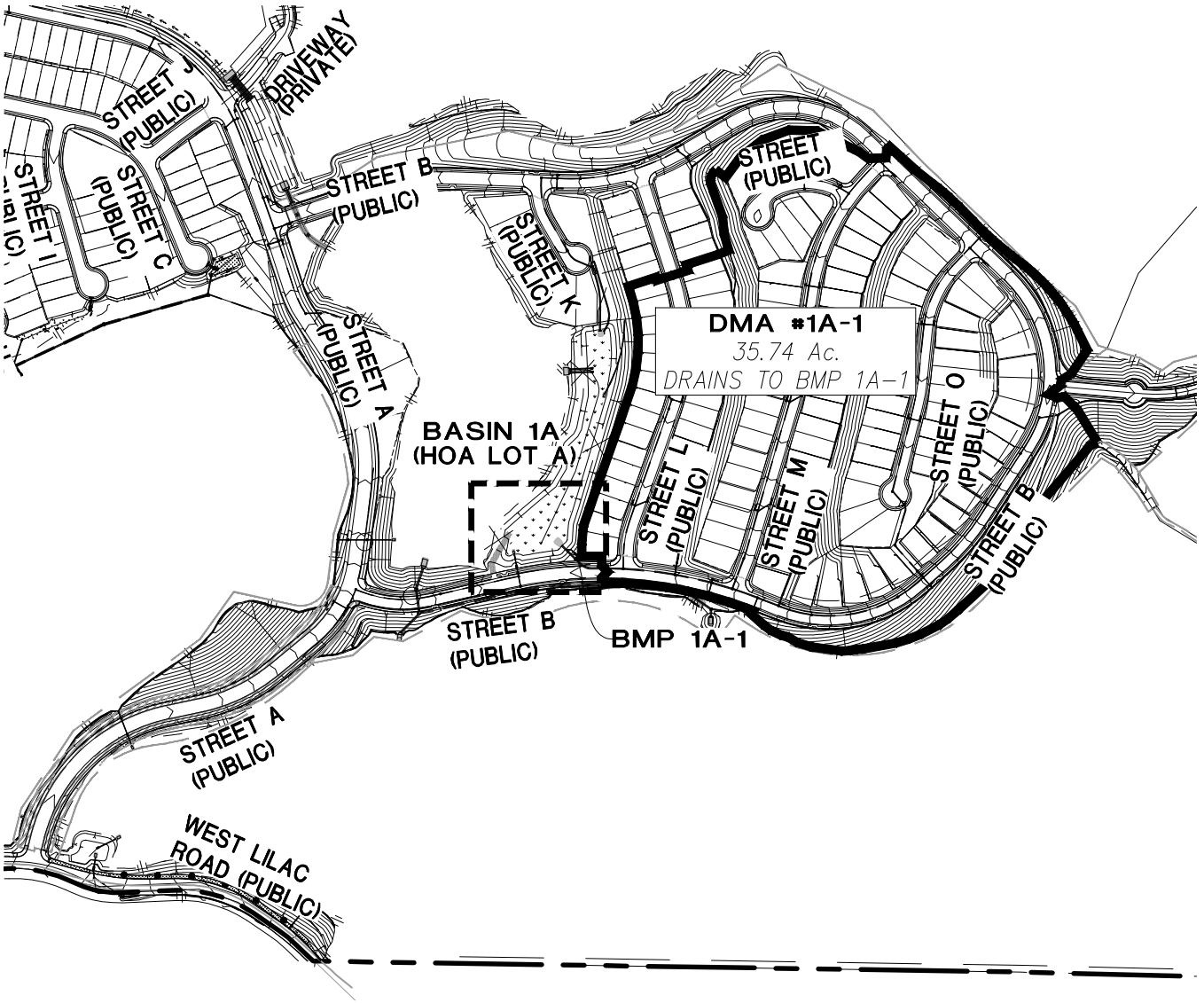


N

| | |
|---|---|
| SCALE: | 1"=500' |
| JOB #: | 4192.00 |
| CREATED: | 11/20/18 |

**COUNTY OF SAN DIEGO**

**OCEAN BREEZE RANCH**

***DMA MAPBOOK***
***DMA#1A-1***

# LEGEND:

DRAINAGE MANAGEMENT AREA

PROPOSED BMP

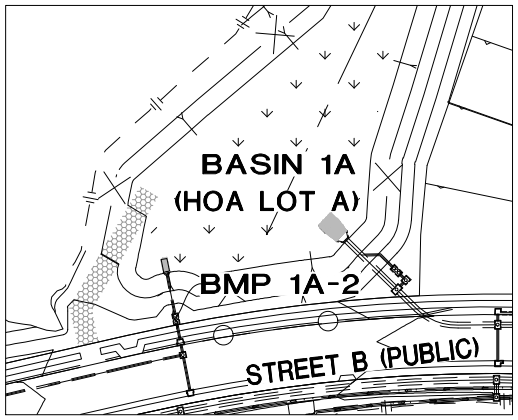


BMP 1A-2 DETAIL
SCALE 1"=150'

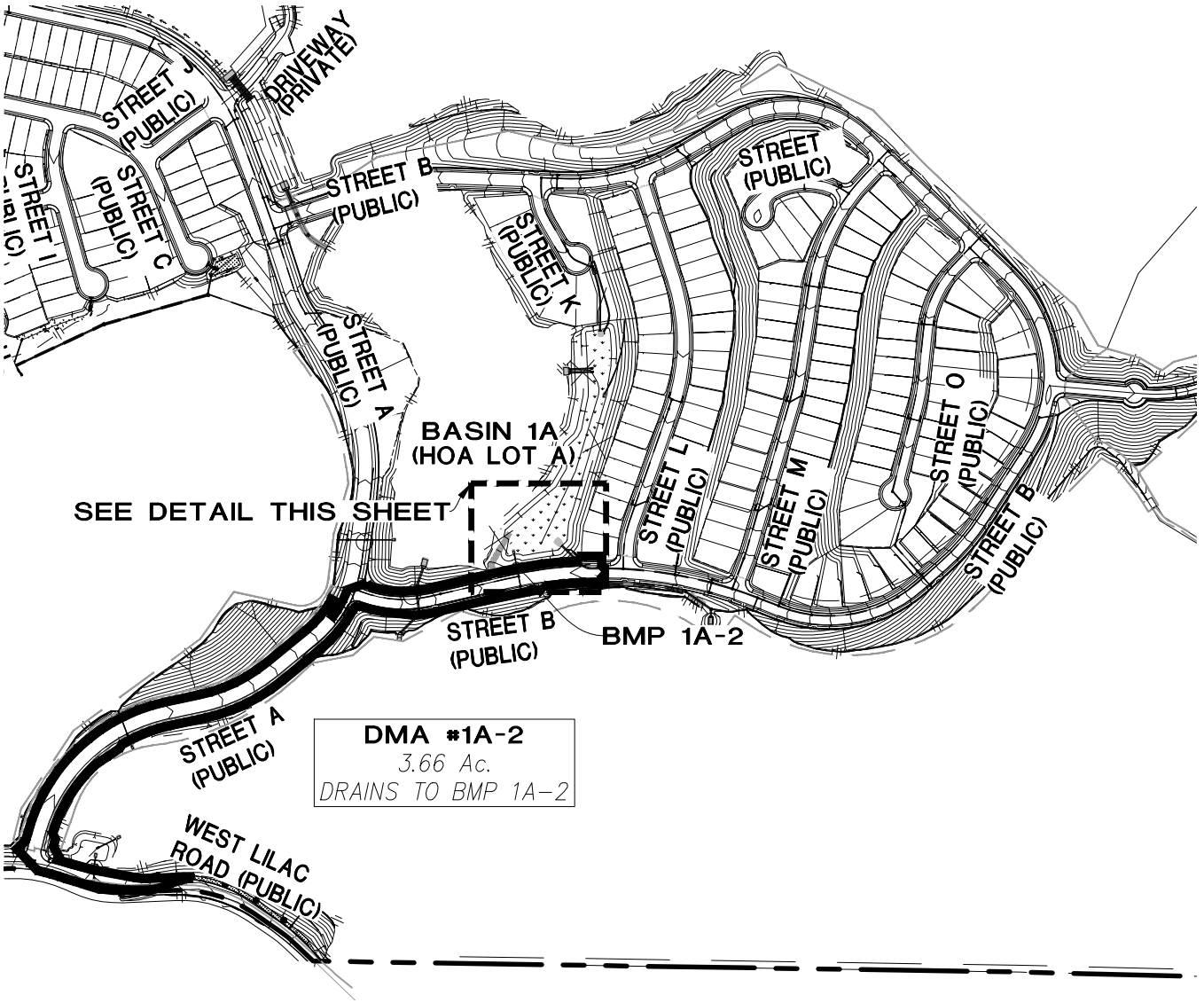


N

| | |
|---|---|
| SCALE: | 1"=500' |
| JOB #: | 4192.00 |
| CREATED: | 10/17/24 |

**COUNTY OF SAN DIEGO**

**OCEAN BREEZE RANCH**

***DMA MAPBOOK***
***DMA#1A-2***

Q:\CA-SAND-PD\Projects\4192.10\Engr\Reports\SWQMP-FE\ATTACHMENTS\A2- DMA EXHIBITS & CONST. PLAN SHEETS\MAP BOOK\4192 DMA Mapbook - DMAs 1-8.dwg 11/7/2024 7:09:48 AM

# LEGEND:

DRAINAGE MANAGEMENT AREA

PROPOSED BMP

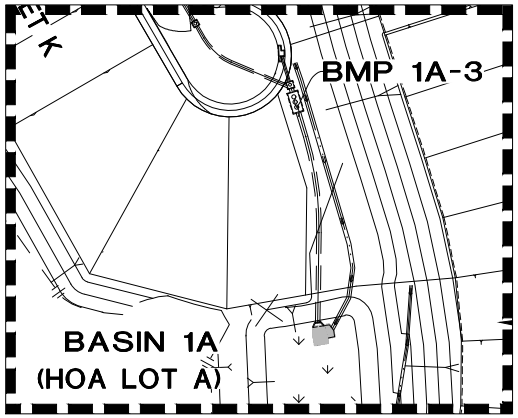


BMP 1A-3 DETAIL
SCALE 1"=150'

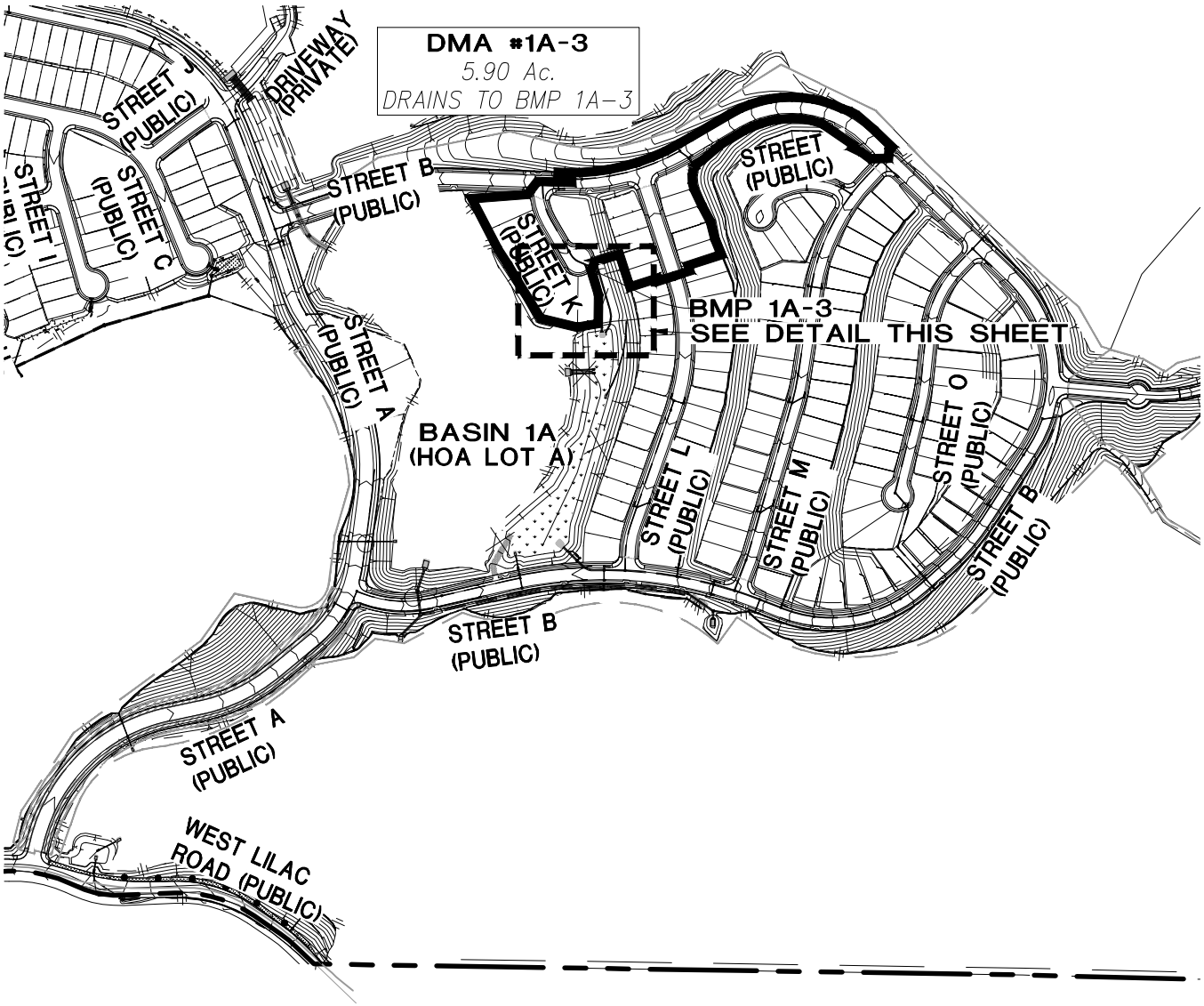


N

| | |
|---|---|
| SCALE: | 1"=500' |
| JOB #: | 4192.00 |
| CREATED: | 10/17/24 |

**COUNTY OF SAN DIEGO**

**OCEAN BREEZE RANCH**

***DMA MAPBOOK***
***DMA#1A-3***

# LEGEND:

DRAINAGE MANAGEMENT AREA

PROPOSED BMP

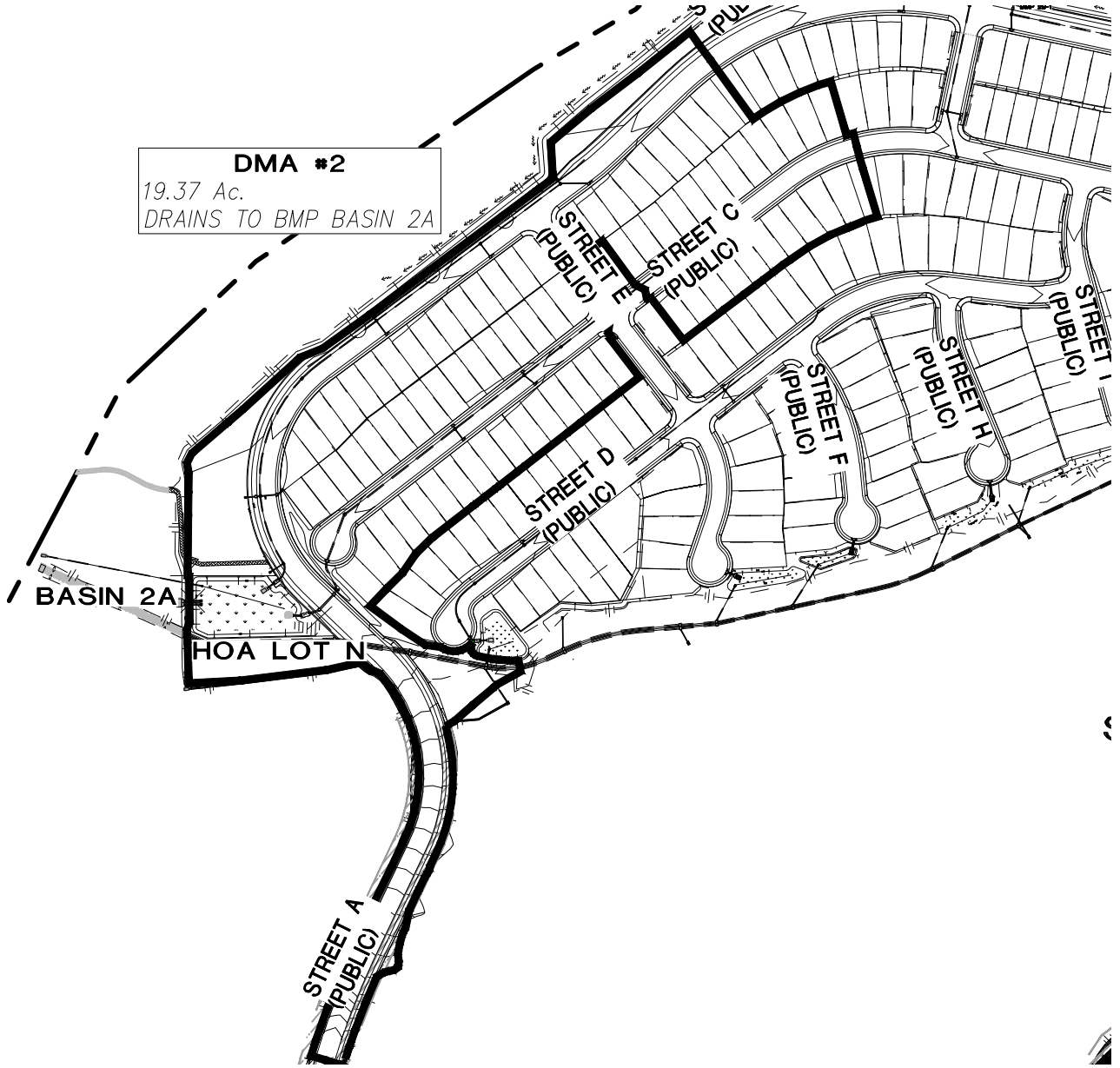


N

| | |
|---|---|
| SCALE: | 1"=350' |
| JOB #: | 4192.00 |
| CREATED: | 11/20/18 |

**COUNTY OF SAN DIEGO**

**OCEAN BREEZE RANCH**

***DMA MAPBOOK***
***DMA#2***

Q:\CA-SAND-PD\Projects\4192.10\Engr\Reports\SWQMP-FE\ATTACHMENTS\A2- DMA EXHIBITS & CONST. PLAN SHEETS\MAP BOOK\4192 DMA Mapbook - DMAs 1-8.dwg 11/7/2024 7:10:39 AM

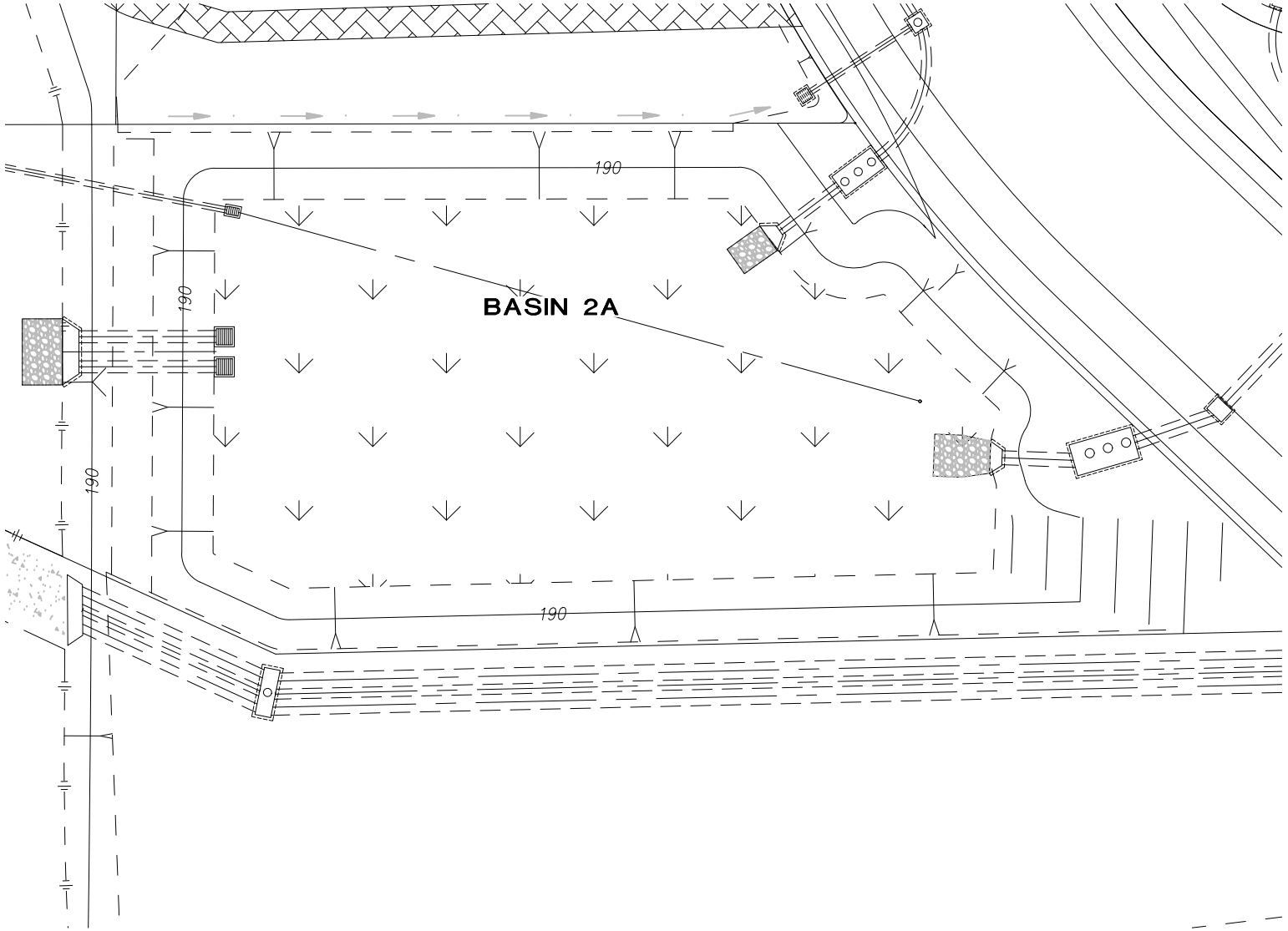


N

| | |
|---|---|
| SCALE: | 1"=40' |
| JOB #: | 4192.00 |
| CREATED: | 11/20/18 |

**COUNTY OF SAN DIEGO**

**OCEAN BREEZE RANCH**

***DMA MAPBOOK***
***BMP2A***

Q:\CA-SAND-PD\Projects\4192.10\Engr\Reports\SWQMP-FE\ATTACHMENTS\A2- DMA EXHIBITS & CONST. PLAN SHEETS\MAP BOOK\4192 DMA Mapbook - DMAs 1-8.dwg 10/30/2024 8:20:26 AM

## LEGEND:

DRAINAGE MANAGEMENT AREA

PROPOSED BMP

**DMA #2A-2**
11.21 Ac.
DRAINS TO BMP 2A-2

**DMA #2A-1**
6.82 Ac.
DRAINS TO BMP 2A-1

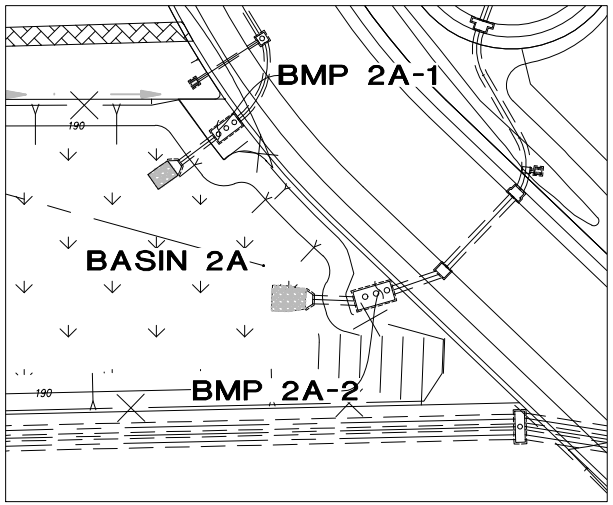


BMP 2A-1 AND 2A-2 DETAIL
SCALE 1"=80'

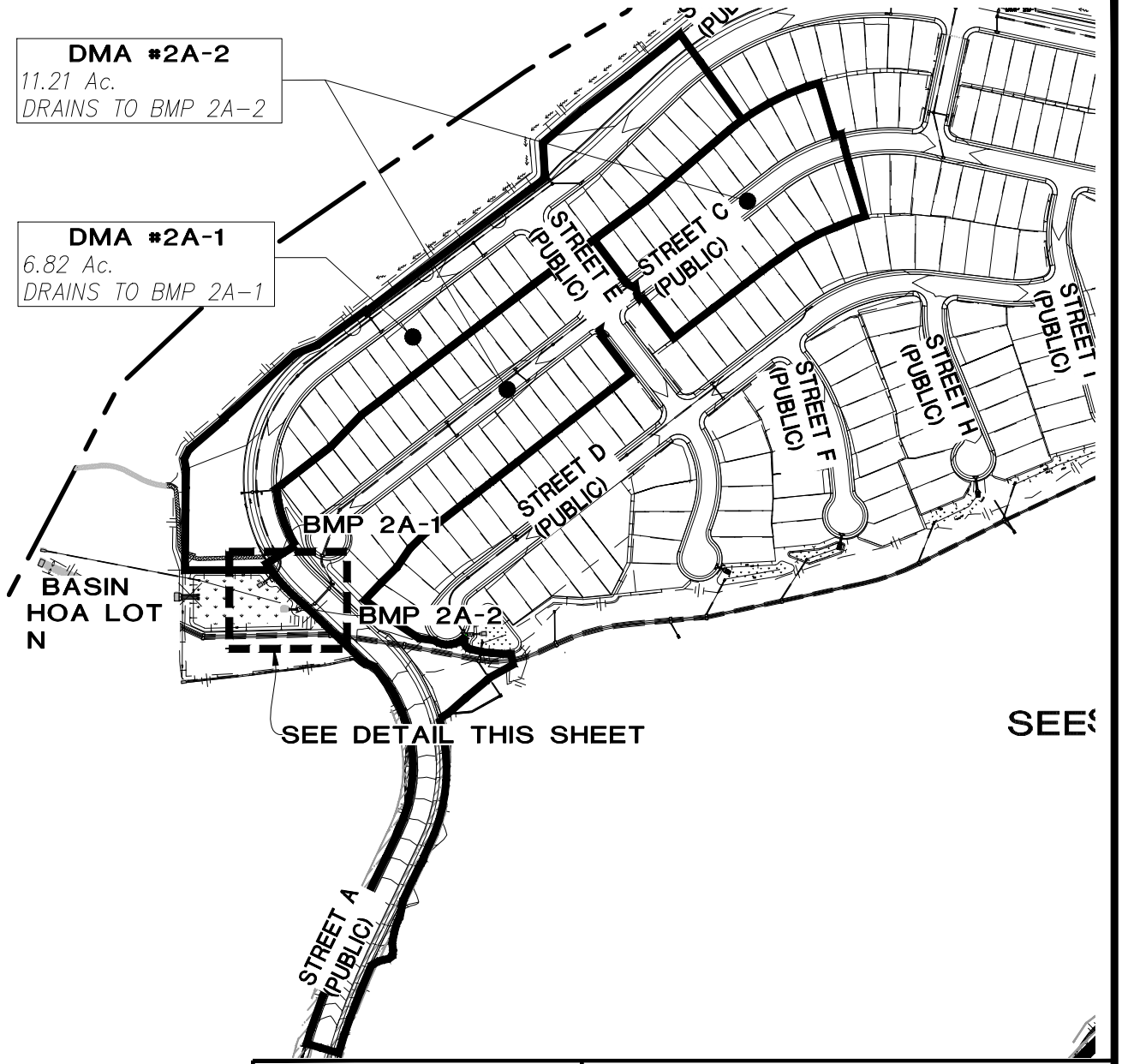


N

| | |
|---|---|
| SCALE: | 1"=350' |
| JOB #: | 4192.00 |
| CREATED: | 11/20/18 |

**COUNTY OF SAN DIEGO**

**OCEAN BREEZE RANCH**

***DMA MAPBOOK***
***DMA#2A-1 AND DMA#2A-2***

Q:\CA-SAND-PD\Projects\4192.10\Engr\Reports\SWQMP-FE\ATTACHMENTS\A2- DMA EXHIBITS & CONST. PLAN SHEETS\MAP BOOK\4192 DMA Mapbook - DMAs 1-8.dwg 11/7/2024 7:11:14 AM

# LEGEND:

DRAINAGE MANAGEMENT AREA

PROPOSED BMP

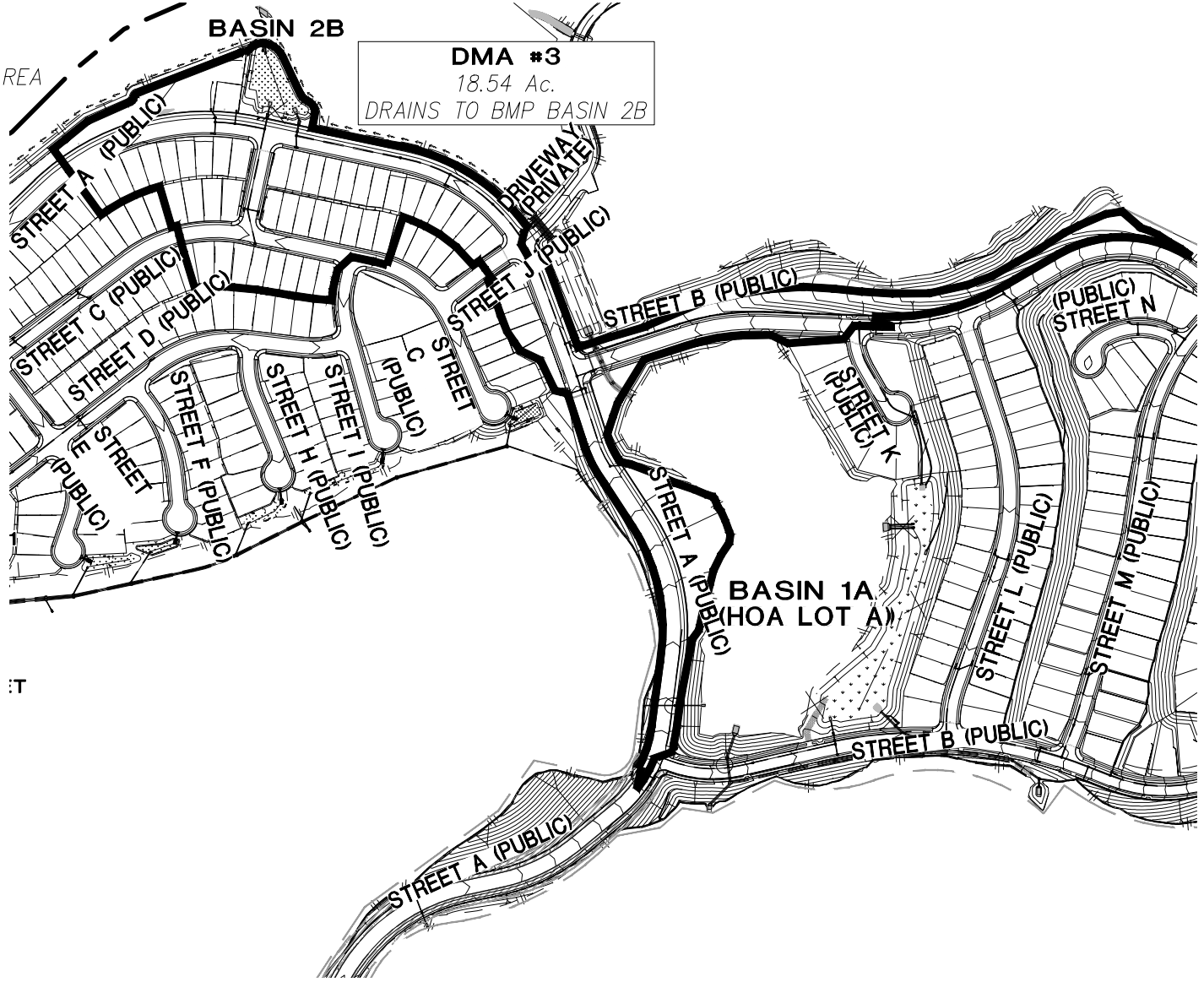


N

| | |
|---|---|
| SCALE: | 1"=450' |
| JOB #: | 4192.00 |
| CREATED: | 11/20/18 |

**COUNTY OF SAN DIEGO**

**OCEAN BREEZE RANCH**

***DMA MAPBOOK***
***DMA#3***

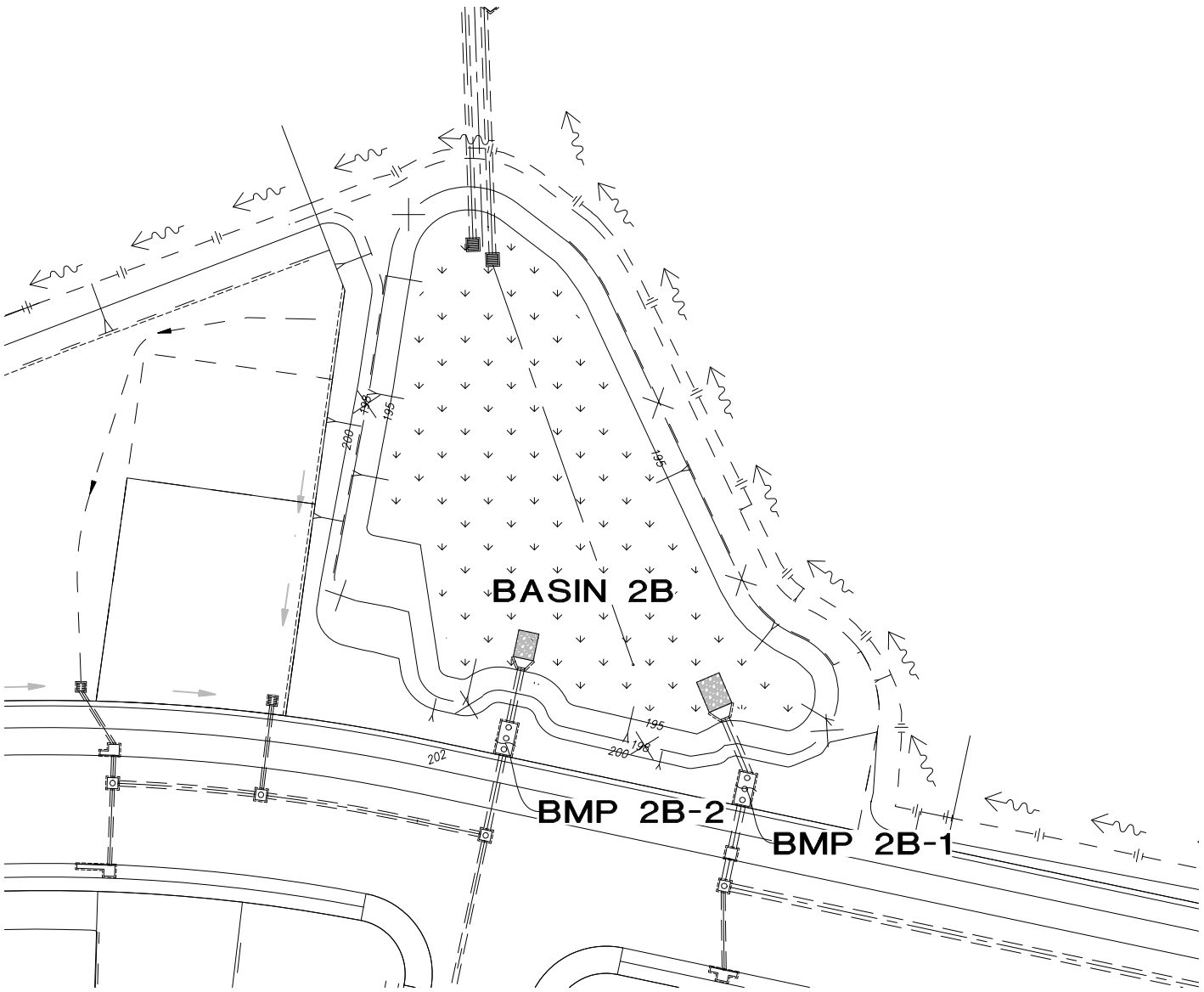


N

| | |
|---|---|
| SCALE: | 1"=60' |
| JOB #: | 4192.00 |
| CREATED: | 11/20/18 |

**COUNTY OF SAN DIEGO**

**OCEAN BREEZE RANCH**

***DMA MAPBOOK***
***BMP2B***

# LEGEND:

DRAINAGE MANAGEMENT AREA

PROPOSED BMP

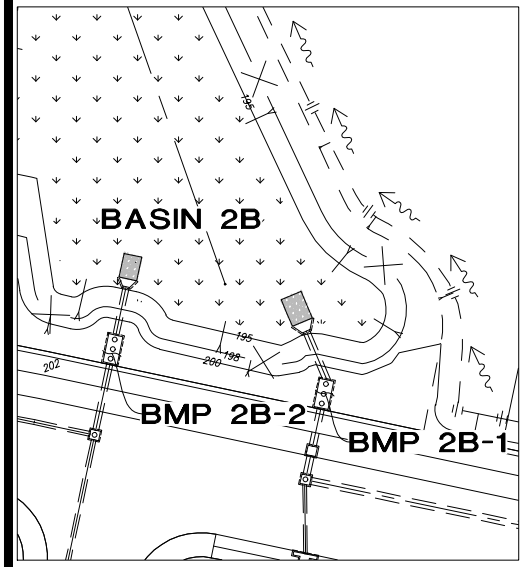


BMP 2B-1 AND 2B-2 DETAIL
SCALE 1"=80'

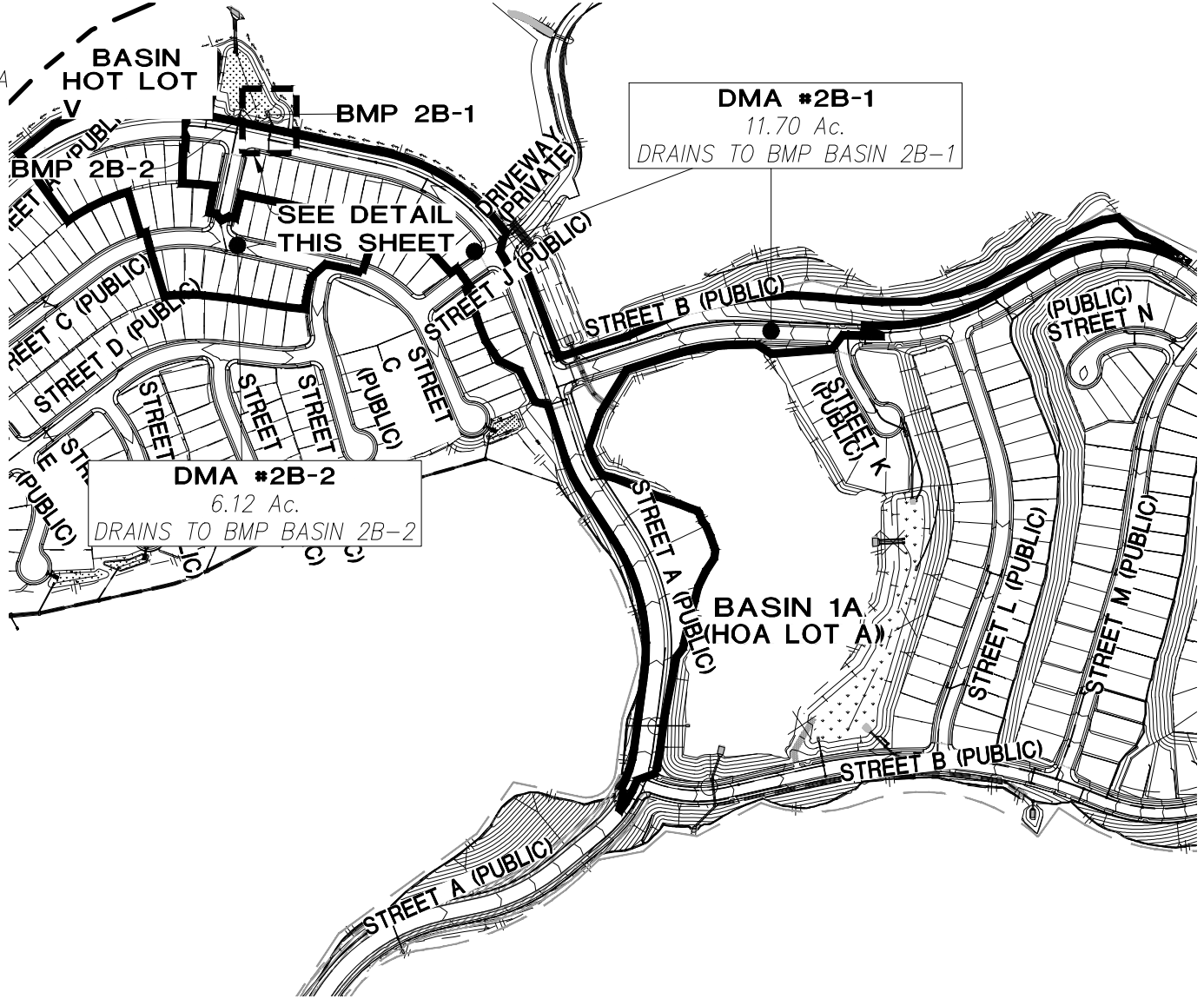


N

| | |
|---|---|
| SCALE: | 1"=450' |
| JOB #: | 4192.00 |
| CREATED: | 11/20/18 |

**COUNTY OF SAN DIEGO**

**OCEAN BREEZE RANCH**

***DMA MAPBOOK***
***DMA#2B-1 AND DMA#2B-2***

Q:\CA-SAND-PD\Projects\4192.10\Engr\Reports\SWQMP-FE\ATTACHMENTS\A2- DMA EXHIBITS & CONST. PLAN SHEETS\MAP BOOK\4192 DMA Mapbook - DMAs 1-8.dwg 11/7/2024 7:12:42 AM

# LEGEND:

DRAINAGE MANAGEMENT AREA

PROPOSED BMP

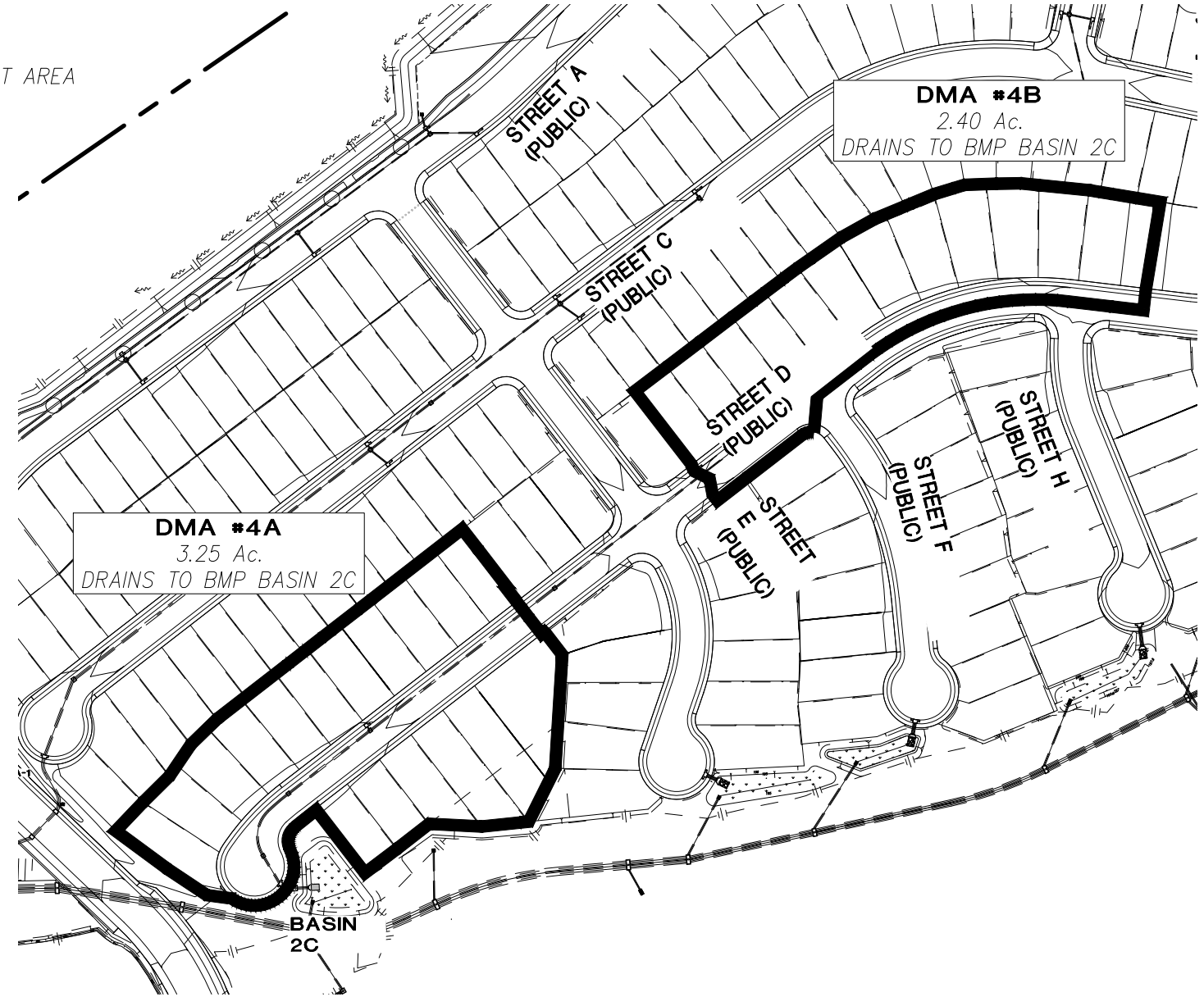


N

| | |
|---|---|
| SCALE: | 1"=200' |
| JOB #: | 4192.00 |
| CREATED: | 11/20/18 |

**COUNTY OF SAN DIEGO**

**OCEAN BREEZE RANCH**

***DMA MAPBOOK***
***DMA 4A AND 4B***

Q:\CA-SAND-PD\Projects\4192.10\Engr\Reports\SWQMP-FE\ATTACHMENTS\A2- DMA EXHIBITS & CONST. PLAN SHEETS\MAP BOOK\4192 DMA Mapbook - DMAs 1-8.dwg 10/30/2024 8:21:26 AM

# LEGEND:

DRAINAGE MANAGEMENT AREA

PROPOSED BMP

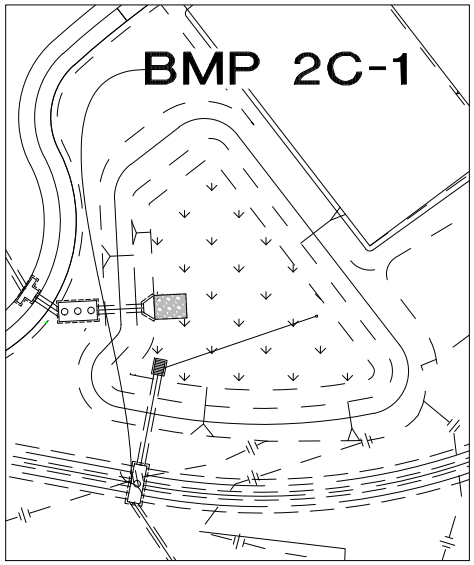


BMP 2C-1 DETAIL
SCALE 1"=60'

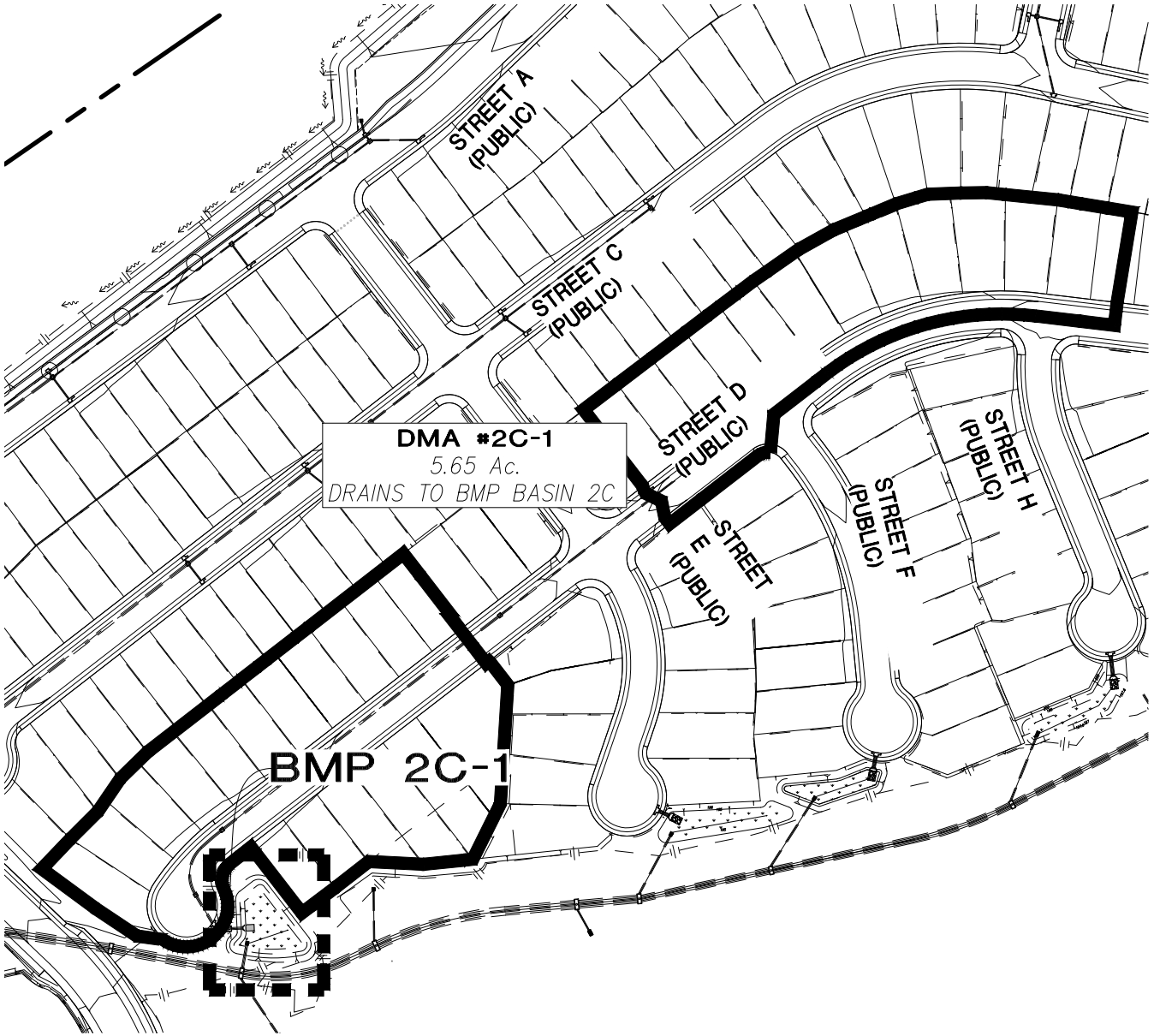


N

| | | |
|---|---|---|
| SCALE: | 1"=200' | **COUNTY OF SAN DIEGO** |
| JOB #: | 4192.00 | **OCEAN BREEZE RANCH** |
| CREATED: | 11/20/18 | ***DMA MAPBOOK*** ***DMA #2C-1*** |

Q:\CA-SAND-PD\Projects\4192.10\Engr\Reports\SWQMP-FE\ATTACHMENTS\A2- DMA EXHIBITS & CONST. PLAN SHEETS\MAP BOOK\4192 DMA Mapbook - DMAs 1-8.dwg 10/30/2024 8:21:20 AM

## LEGEND:

DRAINAGE MANAGEMENT AREA

PROPOSED BMP

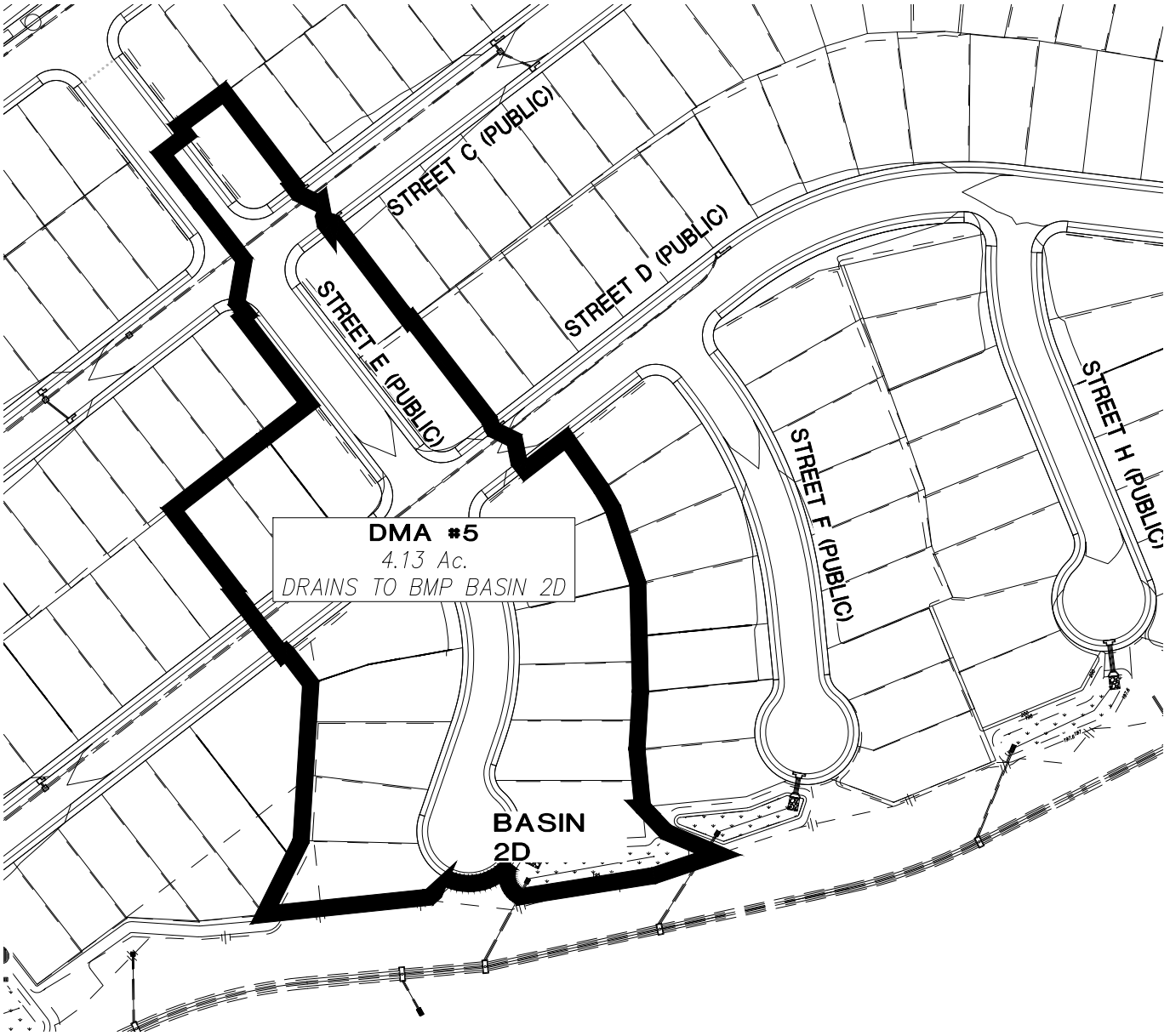


N

| | |
|---|---|
| SCALE: | 1"=150' |
| JOB #: | 4192.00 |
| CREATED: | 11/20/18 |

**COUNTY OF SAN DIEGO**

**OCEAN BREEZE RANCH**

***DMA MAPBOOK***
***DMA #5***

Q:\CA-SAND-PD\Projects\4192.10\Engr\Reports\SWQMP-FE\ATTACHMENTS\A2- DMA EXHIBITS & CONST. PLAN SHEETS\MAP BOOK\4192 DMA Mapbook - DMAs 1-8.dwg 10/30/2024 8:21:36 AM

## LEGEND:

DRAINAGE MANAGEMENT AREA

PROPOSED BMP

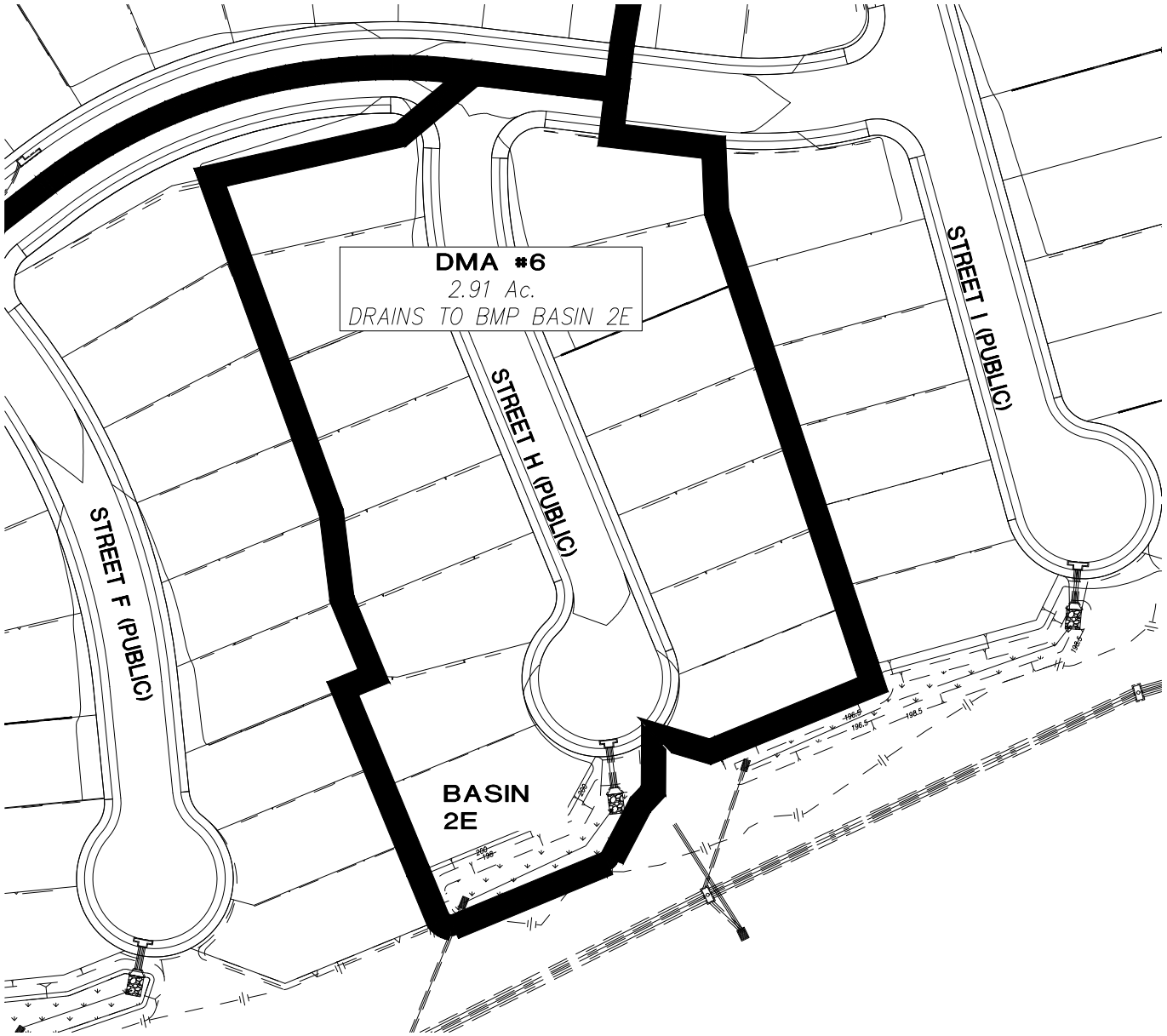


N

| | |
|---|---|
| SCALE: | 1"=100' |
| JOB #: | 4192.00 |
| CREATED: | 11/20/18 |

**COUNTY OF SAN DIEGO**

**OCEAN BREEZE RANCH**

***DMA MAPBOOK***
***DMA #6***

Q:\CA-SAND-PD\Projects\4192.10\Engr\Reports\SWQMP-FE\ATTACHMENTS\A2- DMA EXHIBITS & CONST. PLAN SHEETS\MAP BOOK\4192 DMA Mapbook - DMAs 1-8.dwg 10/30/2024 8:21:56 AM

# LEGEND:

DRAINAGE MANAGEMENT AREA

PROPOSED BMP

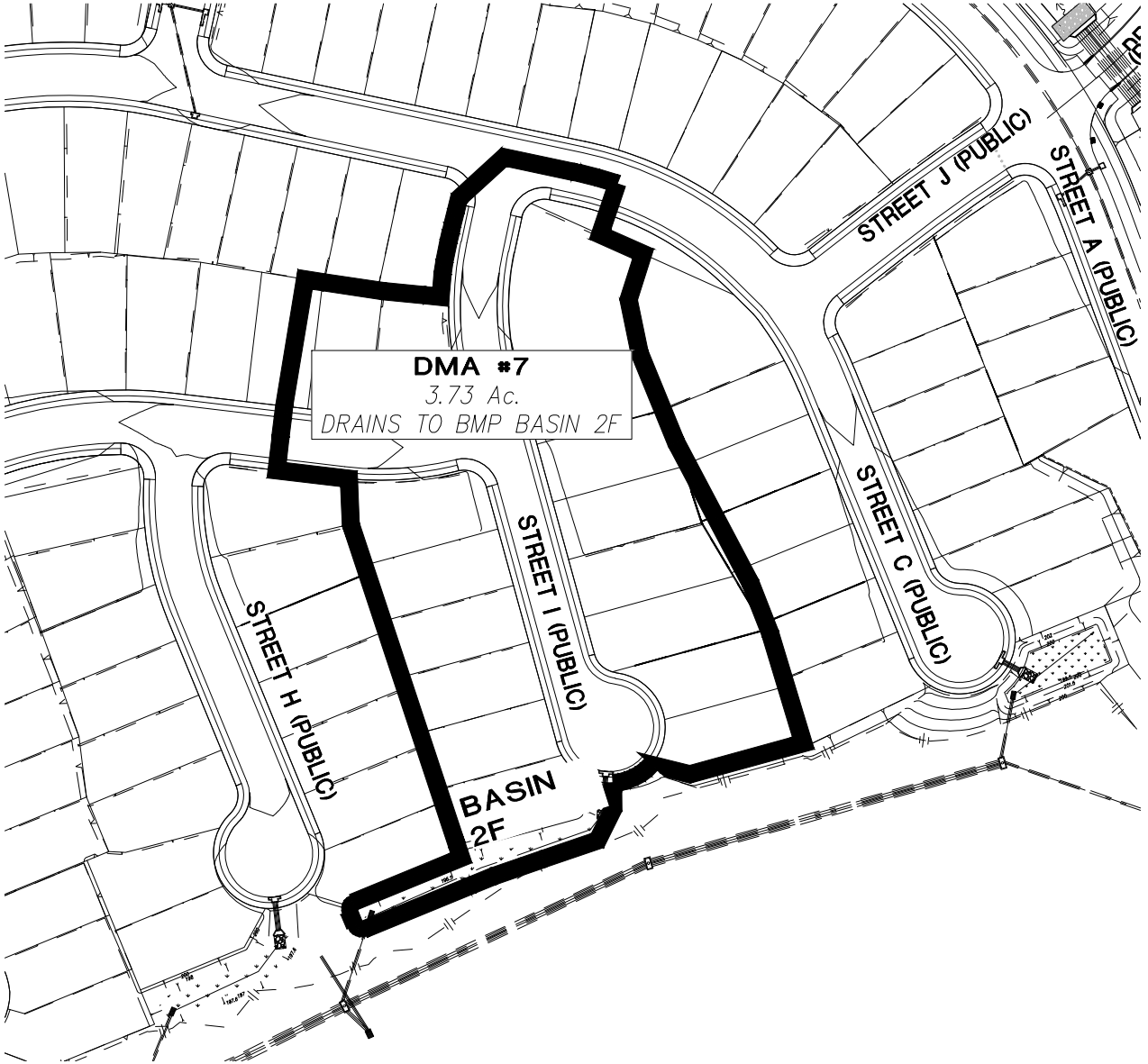


N

| | |
|---|---|
| SCALE: | 1"=150' |
| JOB #: | 4192.00 |
| CREATED: | 11/20/18 |

**COUNTY OF SAN DIEGO**

**OCEAN BREEZE RANCH**

***DMA MAPBOOK***
***DMA #7***

Q:\CA-SAND-PD\Projects\4192.10\Engr\Reports\SWQMP-FE\ATTACHMENTS\A2- DMA EXHIBITS & CONST. PLAN SHEETS\MAP BOOK\4192 DMA Mapbook - DMAs 1-8.dwg 11/7/2024 7:14:21 AM

## LEGEND:

DRAINAGE MANAGEMENT AREA

PROPOSED BMP

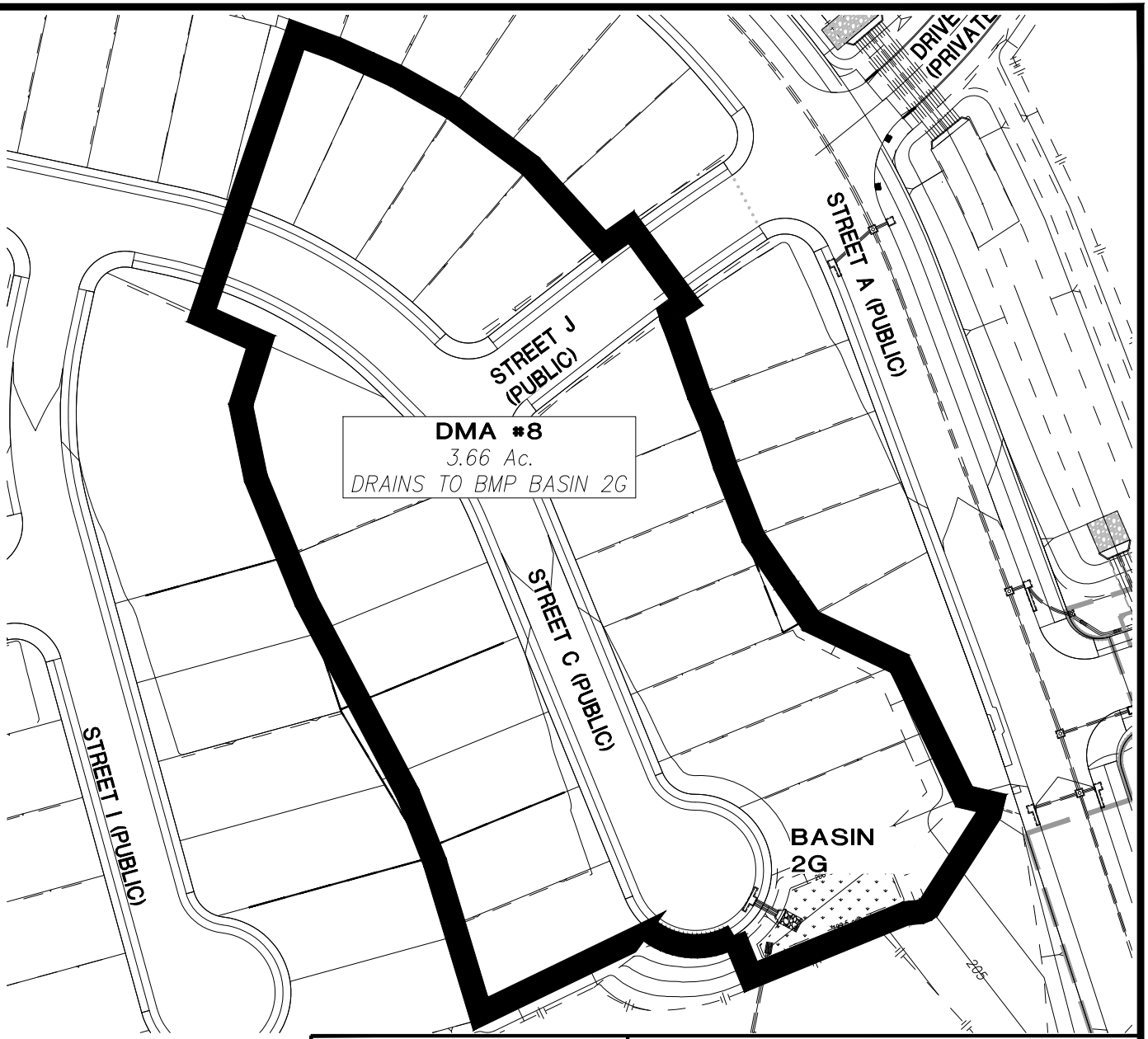


N

| | |
|---|---|
| SCALE: | 1"=100' |
| JOB #: | 4192.00 |
| CREATED: | 11/20/18 |

**COUNTY OF SAN DIEGO**

**OCEAN BREEZE RANCH**

***DMA MAPBOOK***
***DMA #8***

Q:\CA-SAND-PD\Projects\4192.10\Engr\Reports\SWQMP-FE\ATTACHMENTS\A2- DMA EXHIBITS & CONST. PLAN SHEETS\MAP BOOK\4192 DMA Mapbook - DMAs 1-8.dwg 10/30/2024 8:22:16 AM

# LEGEND:

DRAINAGE MANAGEMENT AREA

PROPOSED BMP

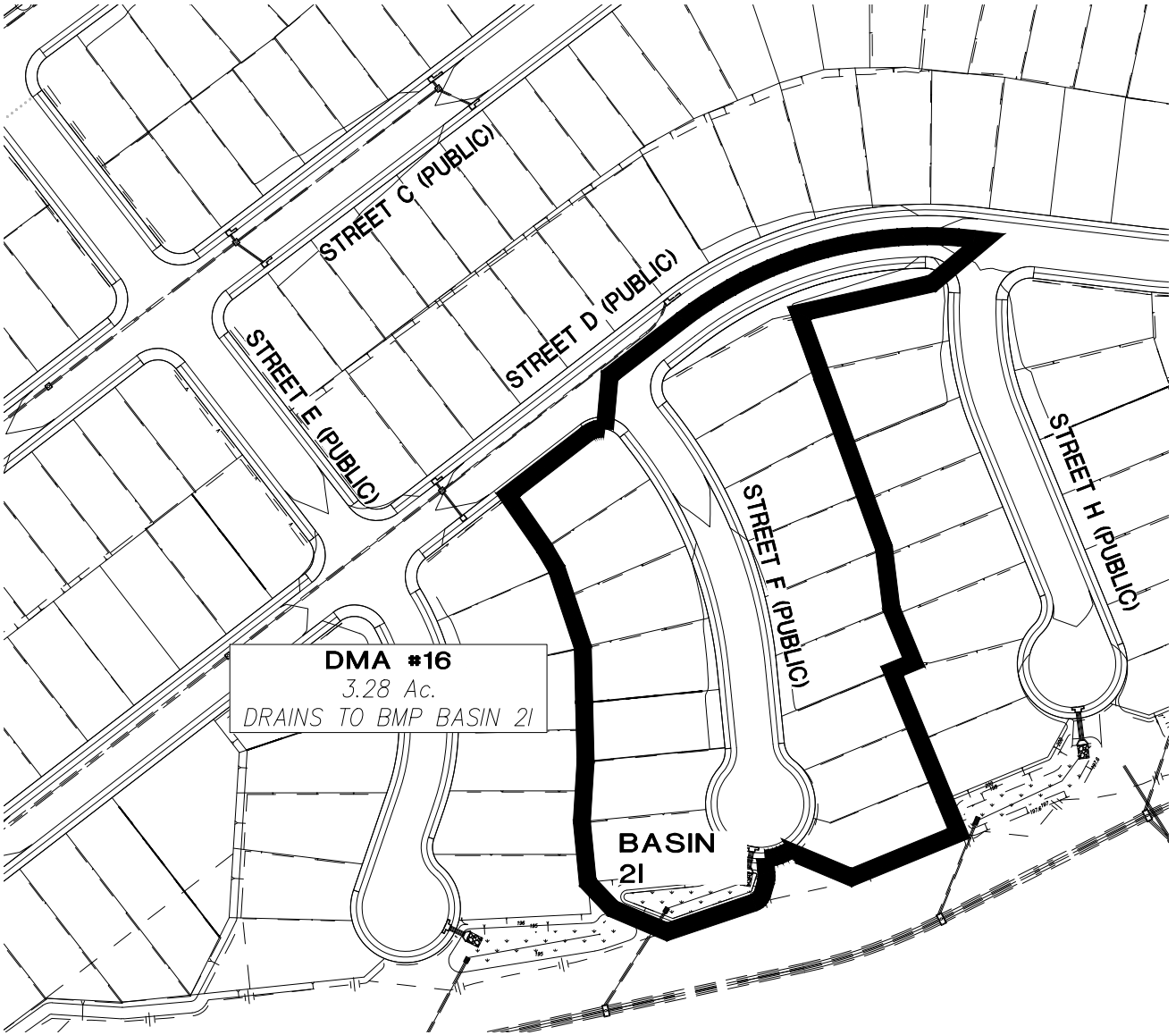


N

| | |
|---|---|
| SCALE: | 1"=150' |
| JOB #: | 4192.00 |
| CREATED: | 11/20/18 |

**COUNTY OF SAN DIEGO**

**OCEAN BREEZE RANCH**

***DMA MAPBOOK***
***DMA #16***

Q:\CA-SAND-PD\Projects\4192.10\Engr\Reports\SWQMP-FE\ATTACHMENTS\A2- DMA EXHIBITS & CONST. PLAN SHEETS\MAP BOOK\4192 DMA Mapbook - DMAs 1-8.dwg 10/30/2024 8:21:46 AM

# LEGEND:

DRAINAGE MANAGEMENT AREA

PROPOSED BMP

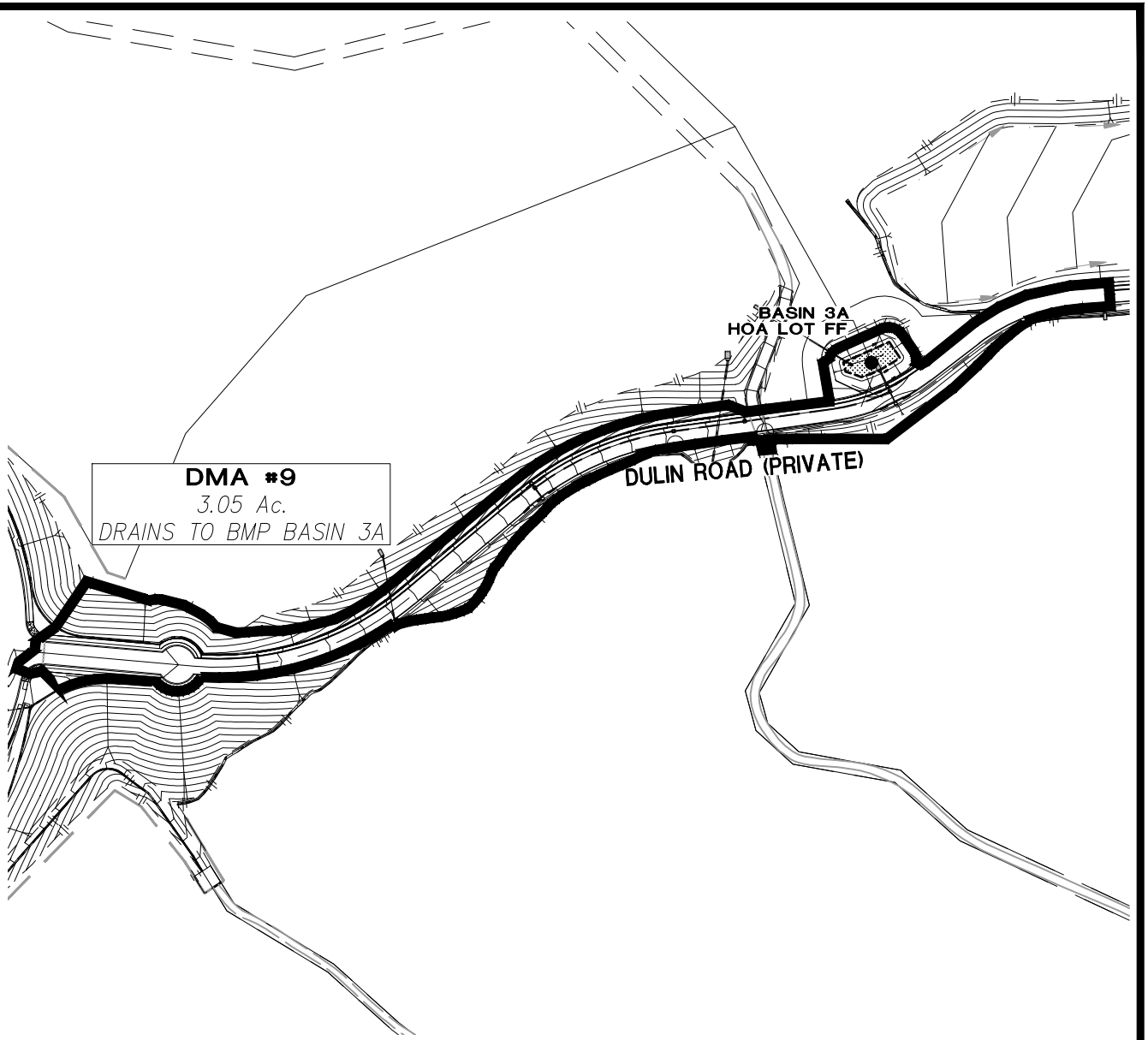


N

| | |
|---|---|
| SCALE: | 1"=250' |
| JOB #: | 4192.00 |
| CREATED: | 11/20/18 |

**COUNTY OF SAN DIEGO**

**OCEAN BREEZE RANCH**

***DMA MAPBOOK***
***DMA#9***

Q:\CA-SAND-PD\Projects\4192.10\Engr\Reports\SWQMP-FE\ATTACHMENTS\A2- DMA EXHIBITS & CONST. PLAN SHEETS\MAP BOOK\4192 DMA Mapbook - DMAs 9-15.dwg
11/7/2024 7:17:25 AM

# LEGEND:

DRAINAGE MANAGEMENT AREA

PROPOSED BMP

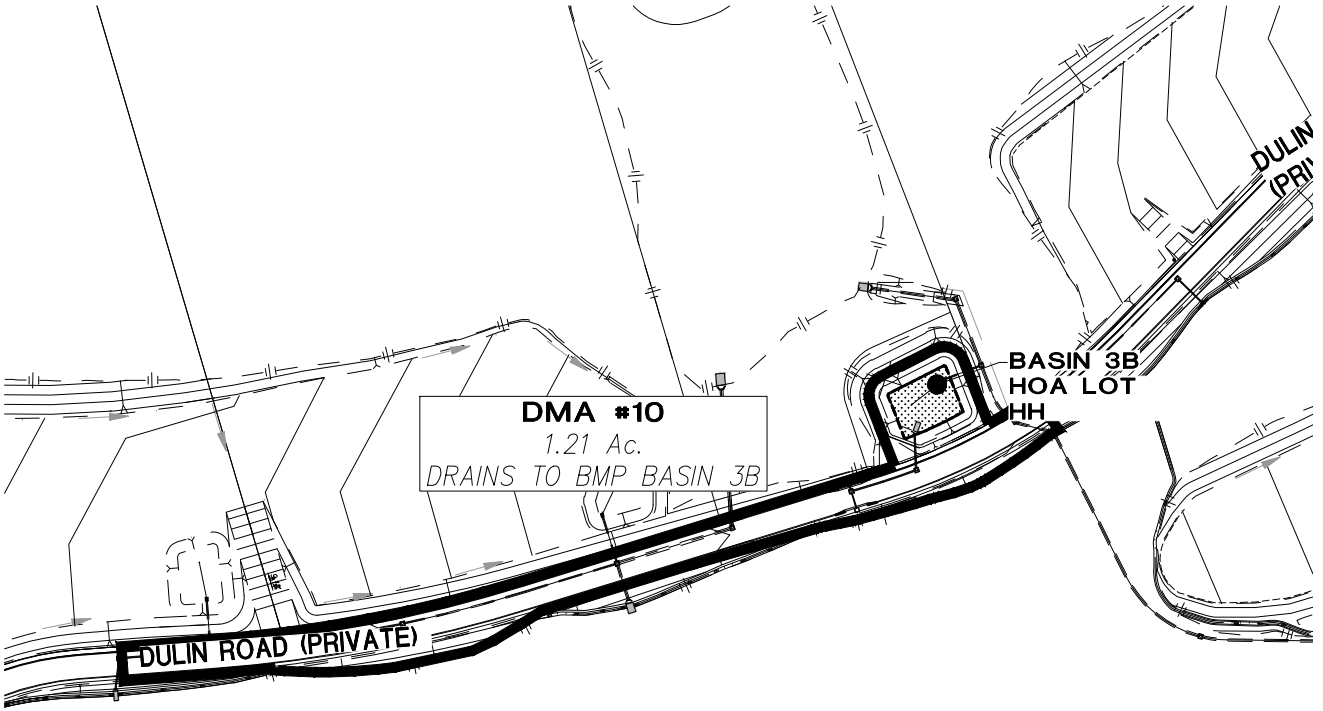


N

| | |
|---|---|
| SCALE: | 1"=200' |
| JOB #: | 4192.00 |
| CREATED: | 11/20/18 |

**COUNTY OF SAN DIEGO**

**OCEAN BREEZE RANCH**

***DMA MAPBOOK***
***DMA#10***

Q:\CA-SAND-PD\Projects\4192.10\Engr\Reports\SWQMP-FE\ATTACHMENTS\A2- DMA EXHIBITS & CONST. PLAN SHEETS\MAP BOOK\4192 DMA Mapbook - DMAs 9-15.dwg
11/7/2024 7:17:54 AM

## LEGEND:

DRAINAGE MANAGEMENT AREA

PROPOSED BMP

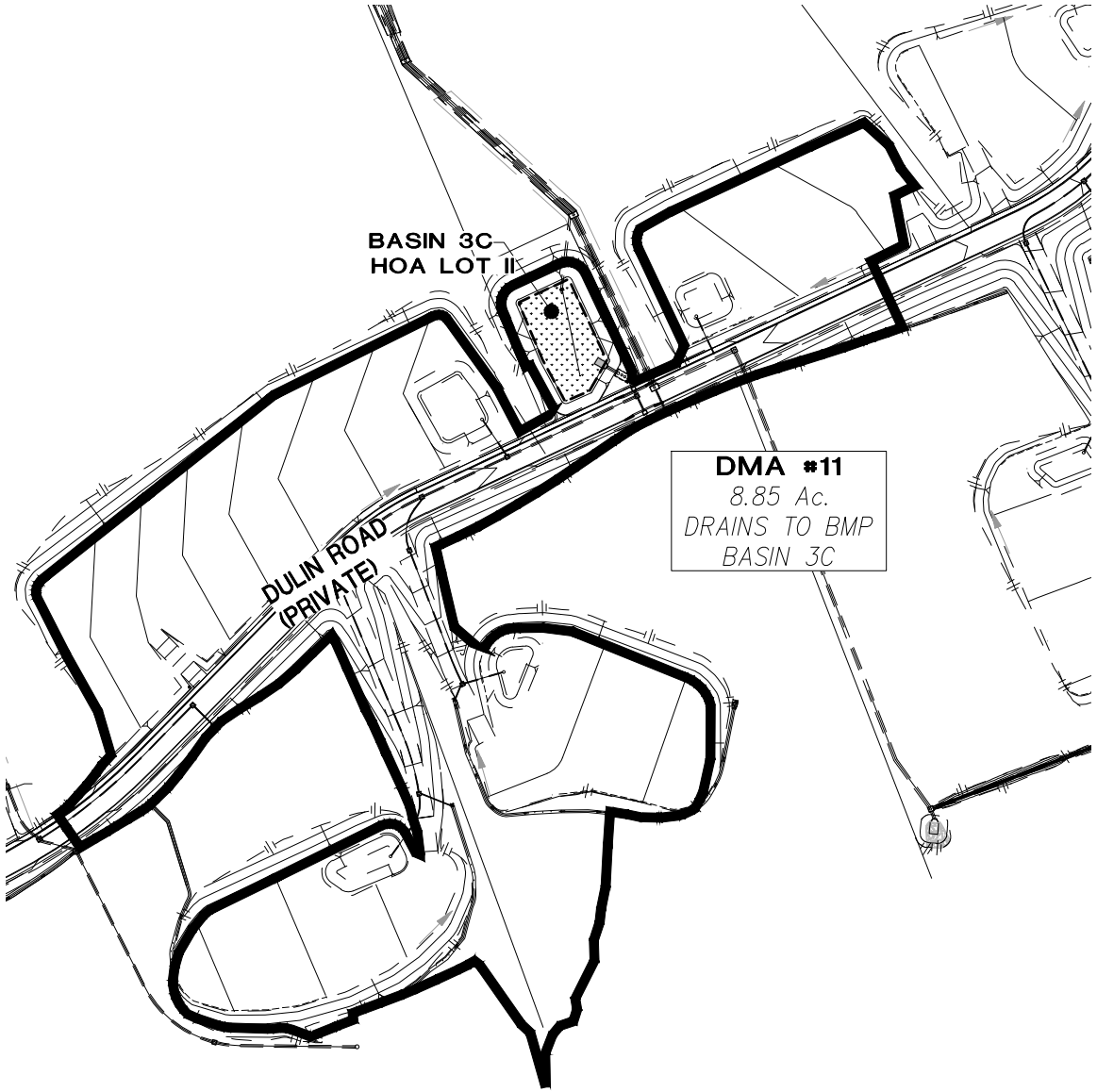


N

| | |
|---|---|
| SCALE: | 1"=200' |
| JOB #: | 4192.00 |
| CREATED: | 11/20/18 |

**COUNTY OF SAN DIEGO**

**OCEAN BREEZE RANCH**

***DMA MAPBOOK***
***DMA#11***

Q:\CA-SAND-PD\Projects\4192.10\Engr\Reports\SWQMP-FE\ATTACHMENTS\A2- DMA EXHIBITS & CONST. PLAN SHEETS\MAP BOOK\4192 DMA Mapbook - DMAs 9-15.dwg
11/7/2024 7:19:16 AM

## LEGEND:

DRAINAGE MANAGEMENT AREA

PROPOSED BMP

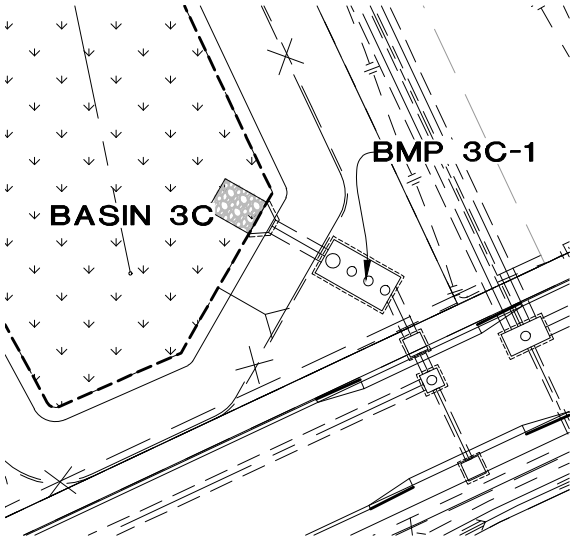


BMP 3C-1 DETAIL
SCALE 1"=40'

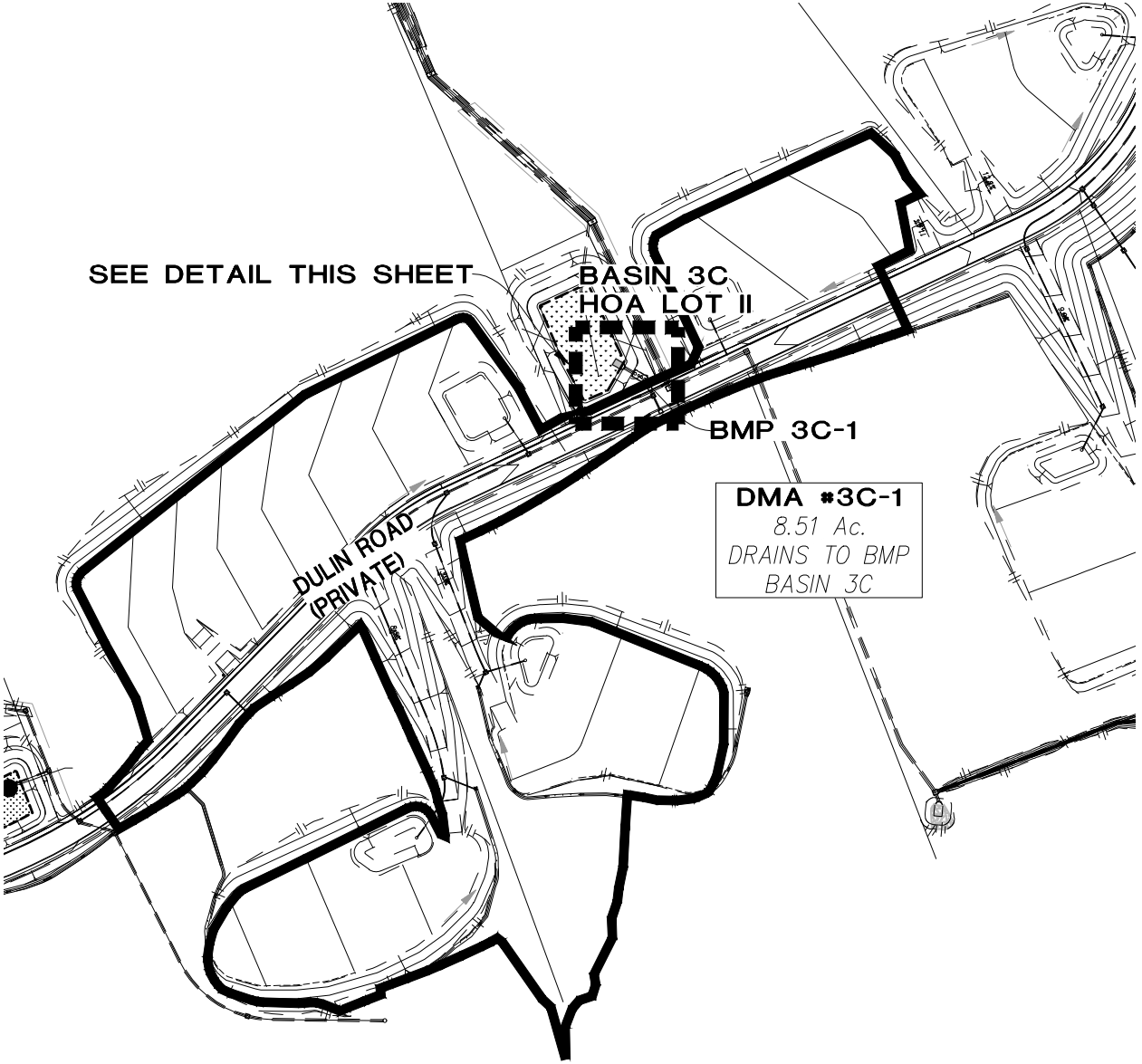


N

| | |
|---|---|
| SCALE: | 1"=200' |
| JOB #: | 4192.00 |
| CREATED: | 11/20/18 |

**COUNTY OF SAN DIEGO**

**OCEAN BREEZE RANCH**

***DMA MAPBOOK***
***DMA#3C-1***

Q:\CA-SAND-PD\Projects\4192.10\Engr\Reports\SWQMP-FE\ATTACHMENTS\A2- DMA EXHIBITS & CONST. PLAN SHEETS\MAP BOOK\4192 DMA Mapbook - DMAs 9-15.dwg
11/7/2024 7:18:53 AM

## LEGEND:

DRAINAGE MANAGEMENT AREA

PROPOSED BMP

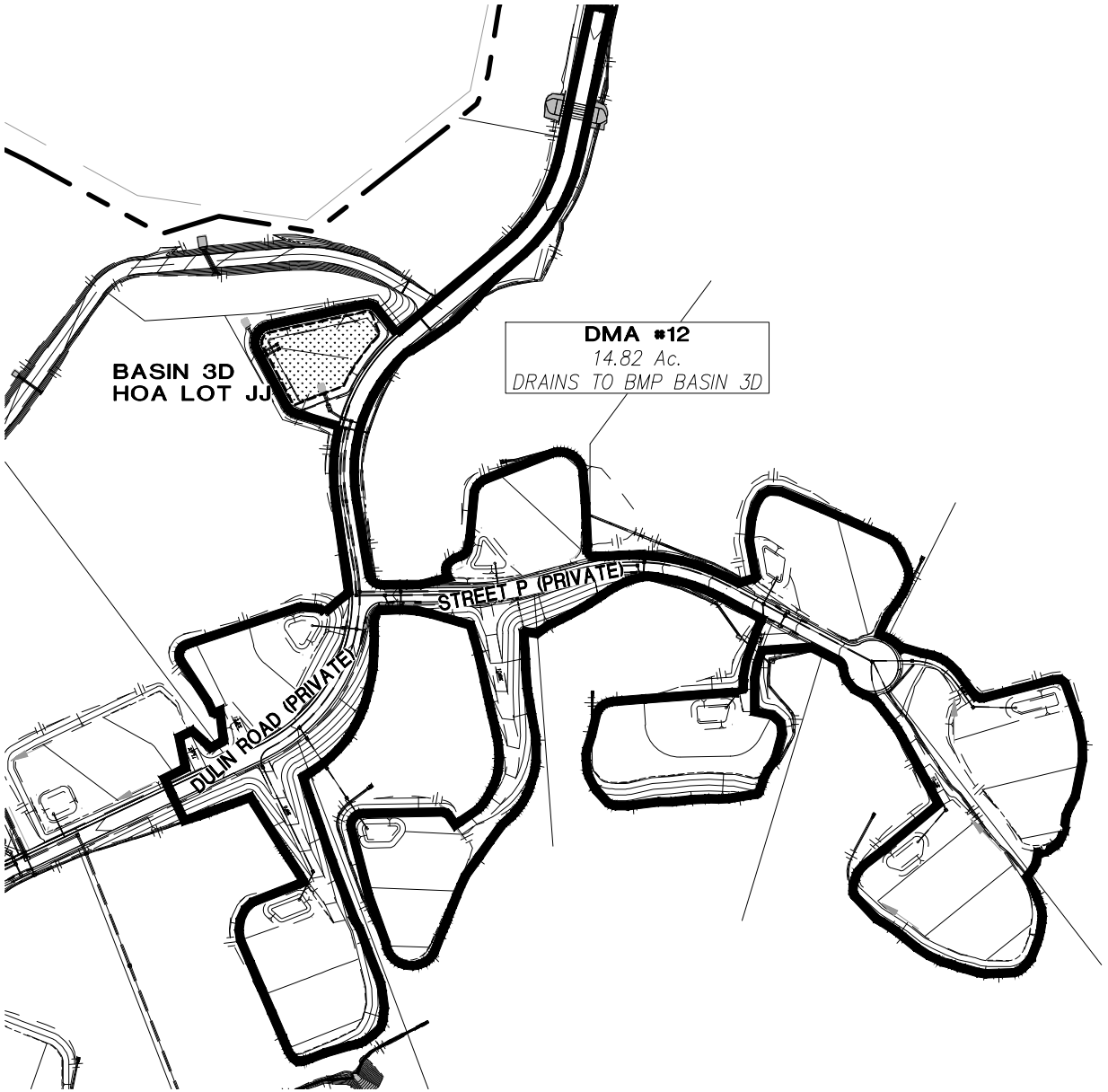


N

| | |
|---|---|
| SCALE: | 1"=300' |
| JOB #: | 4192.00 |
| CREATED: | 11/20/18 |

**COUNTY OF SAN DIEGO**

**OCEAN BREEZE RANCH**

***DMA MAPBOOK***
***DMA#12***

Q:\CA-SAND-PD\Projects\4192.10\Engr\Reports\SWQMP-FE\ATTACHMENTS\A2- DMA EXHIBITS & CONST. PLAN SHEETS\MAP BOOK\4192 DMA Mapbook - DMAs 9-15.dwg
11/7/2024 7:19:37 AM

# LEGEND:

DRAINAGE MANAGEMENT AREA

PROPOSED BMP

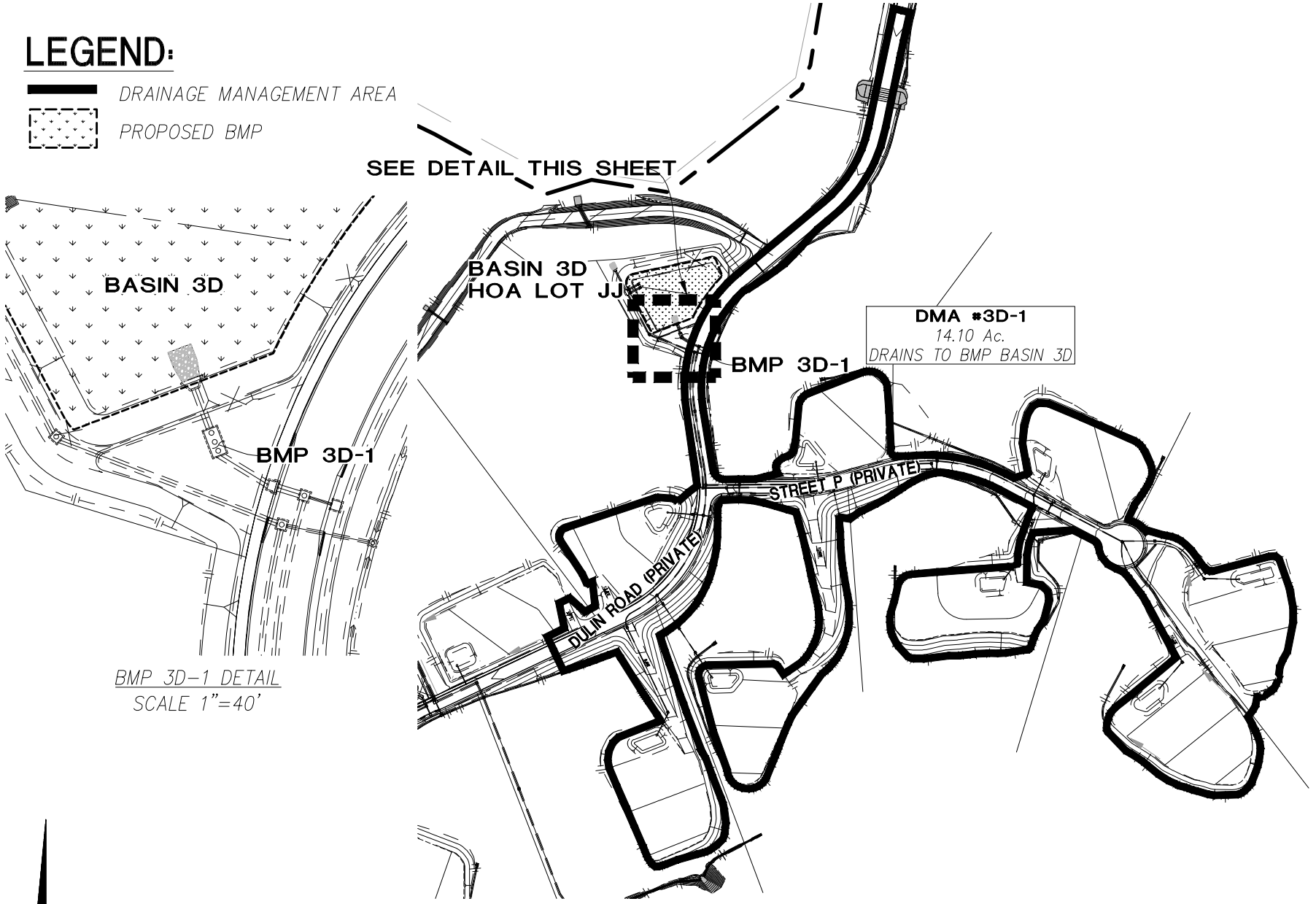


BMP 3D-1 DETAIL
SCALE 1"=40'

N

| | |
|---|---|
| SCALE: | 1"=300' |
| JOB #: | 4192.00 |
| CREATED: | 11/20/18 |

**COUNTY OF SAN DIEGO**

**OCEAN BREEZE RANCH**

***DMA MAPBOOK***
***DMA#3D-1***

Q:\CA-SAND-PD\Projects\4192.10\Engr\Reports\SWQMP-FE\ATTACHMENTS\A2- DMA EXHIBITS & CONST. PLAN SHEETS\MAP BOOK\4192 DMA Mapbook - DMAs 9-15.dwg
11/7/2024 7:20:05 AM

## LEGEND:

DRAINAGE MANAGEMENT AREA

PROPOSED BMP

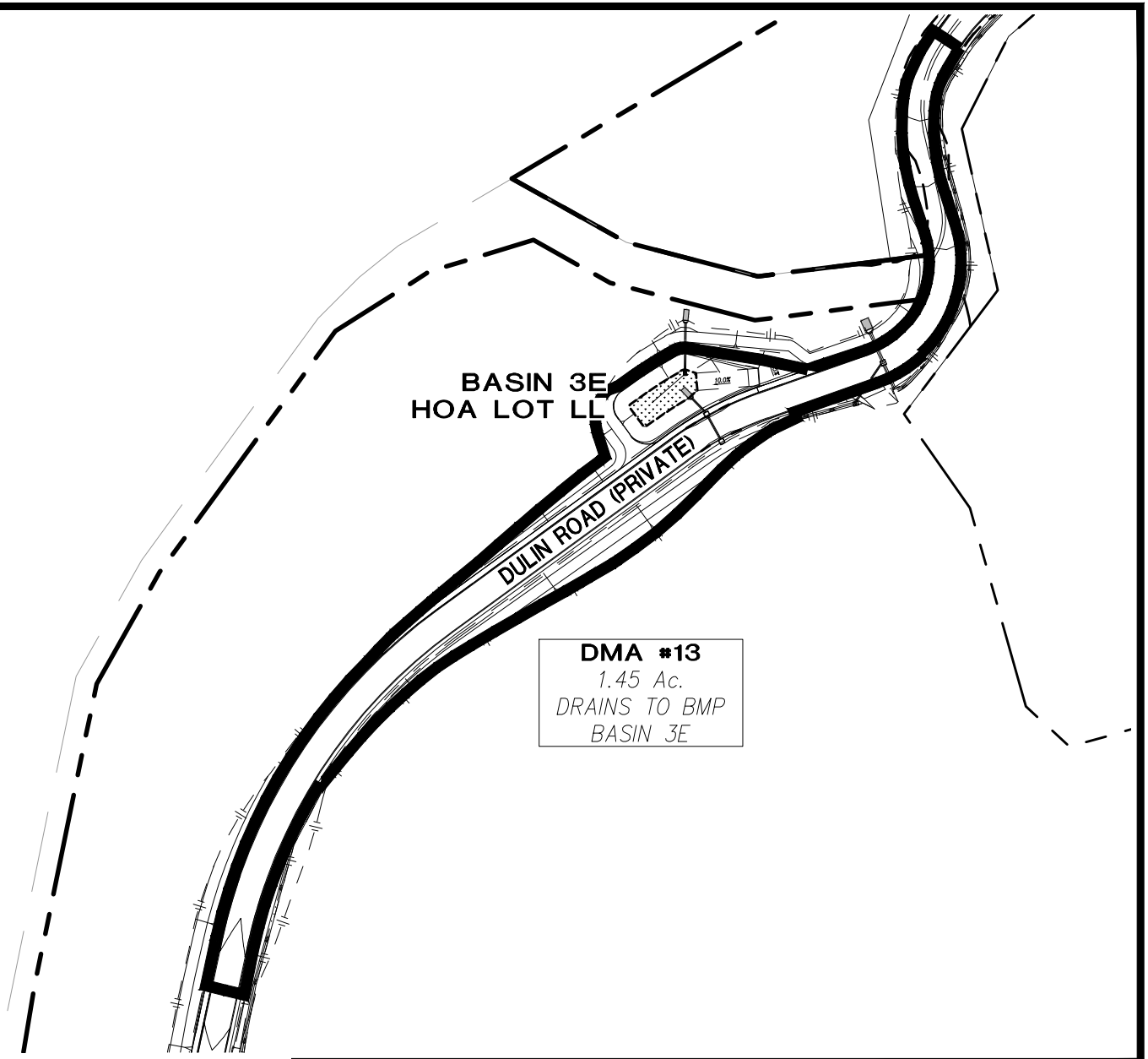


N

| | |
|---|---|
| SCALE: | 1"=150' |
| JOB #: | 4192.00 |
| CREATED: | 11/20/18 |

**COUNTY OF SAN DIEGO**

**OCEAN BREEZE RANCH**

***DMA MAPBOOK***
***DMA#13***

Q:\CA-SAND-PD\Projects\4192.10\Engr\Reports\SWQMP-FE\ATTACHMENTS\A2- DMA EXHIBITS & CONST. PLAN SHEETS\MAP BOOK\4192 DMA Mapbook - DMAs 9-15.dwg
11/7/2024 7:20:29 AM

# LEGEND:

DRAINAGE MANAGEMENT AREA

PROPOSED BMP

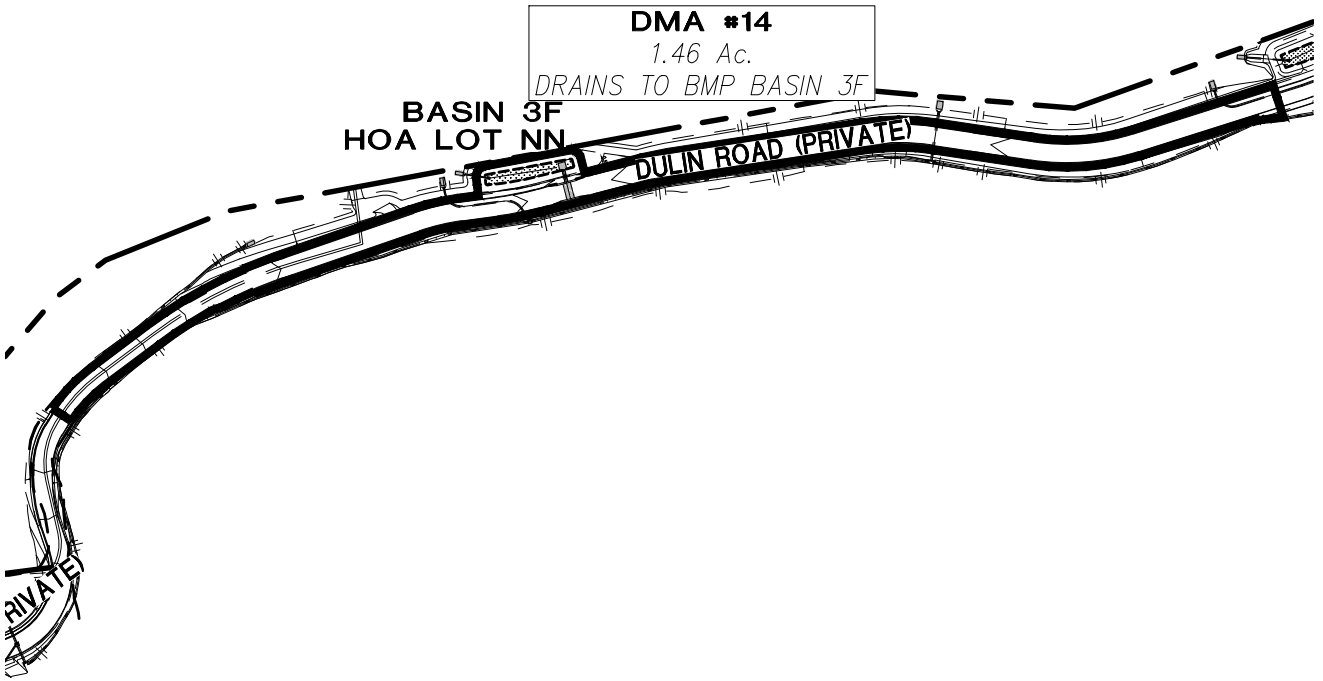


N

| | | |
|---|---|---|
| SCALE: | 1"=250' | **COUNTY OF SAN DIEGO** |
| JOB #: | 4192.00 | **OCEAN BREEZE RANCH** |
| CREATED: | 11/20/18 | ***DMA MAPBOOK*** ***DMA#14*** |

Q:\CA-SAND-PD\Projects\4192.10\Engr\Reports\SWQMP-FE\ATTACHMENTS\A2- DMA EXHIBITS & CONST. PLAN SHEETS\MAP BOOK\4192 DMA Mapbook - DMAs 9-15.dwg
11/7/2024 7:20:50 AM

## LEGEND:

DRAINAGE MANAGEMENT AREA

PROPOSED BMP

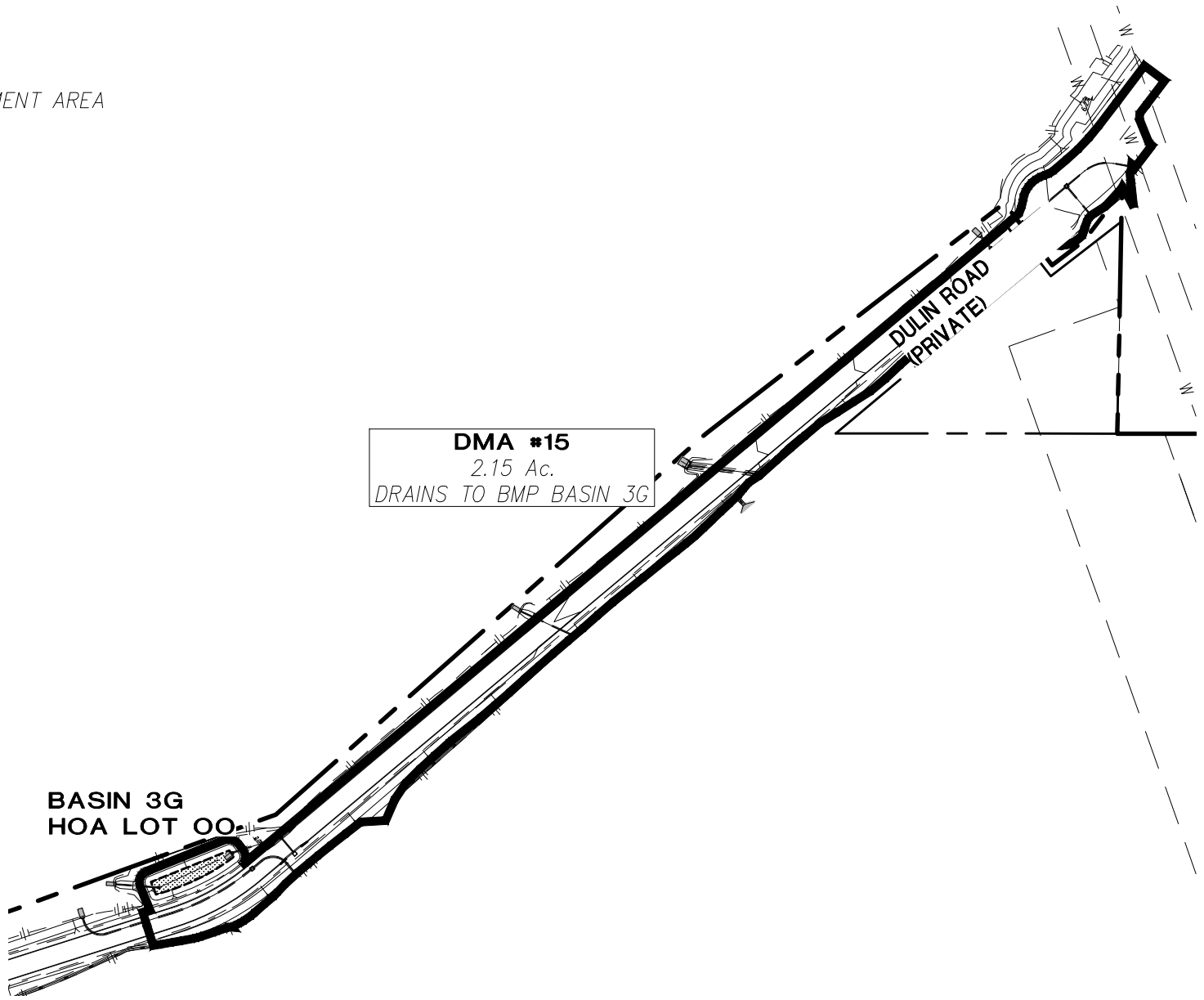


N

| | |
|---|---|
| SCALE: | 1"=200' |
| JOB #: | 4192.00 |
| CREATED: | 11/20/18 |

**COUNTY OF SAN DIEGO**

**OCEAN BREEZE RANCH**

***DMA MAPBOOK***
***DMA#15***

Q:\CA-SAND-PD\Projects\4192.10\Engr\Reports\SWQMP-FE\ATTACHMENTS\A2- DMA EXHIBITS & CONST. PLAN SHEETS\MAP BOOK\4192 DMA Mapbook - DMAs 9-15.dwg
11/7/2024 7:21:03 AM

# LEGEND:

DRAINAGE MANAGEMENT AREA

PROPOSED BMP

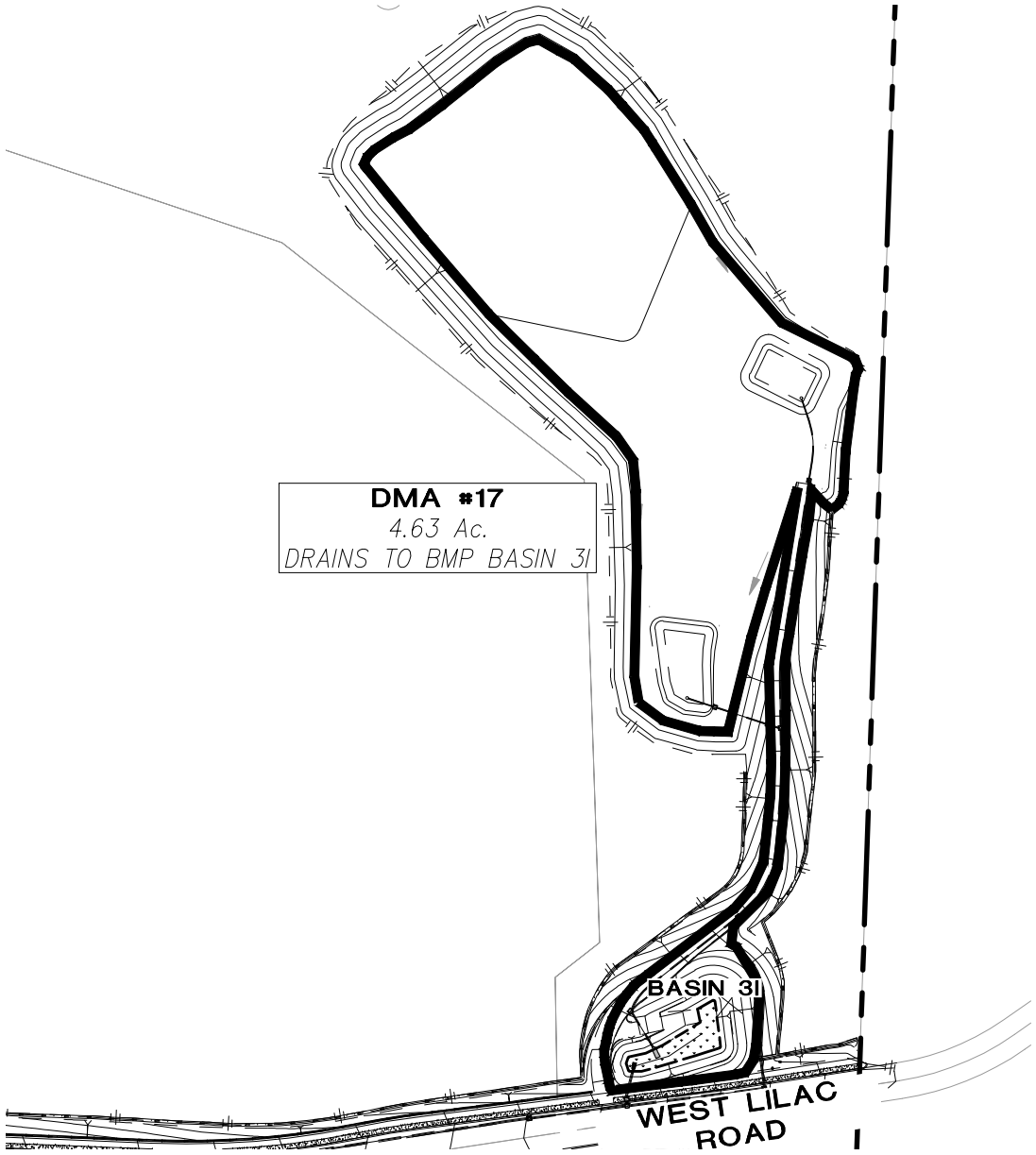


N

| | |
|---|---|
| SCALE: | 1"=200' |
| JOB #: | 4192.00 |
| CREATED: | 11/20/18 |

**COUNTY OF SAN DIEGO**

**OCEAN BREEZE RANCH**

***DMA MAPBOOK***
***DMA#17***

Q:\CA-SAND-PD\Projects\4192.10\Engr\Reports\SWQMP-FE\ATTACHMENTS\A2- DMA EXHIBITS & CONST. PLAN SHEETS\MAP BOOK\4192 DMA Mapbook - DMAs 16-19.dwg 11/7/2024 7:24:16 AM

# LEGEND:

DRAINAGE MANAGEMENT AREA

PROPOSED BMP

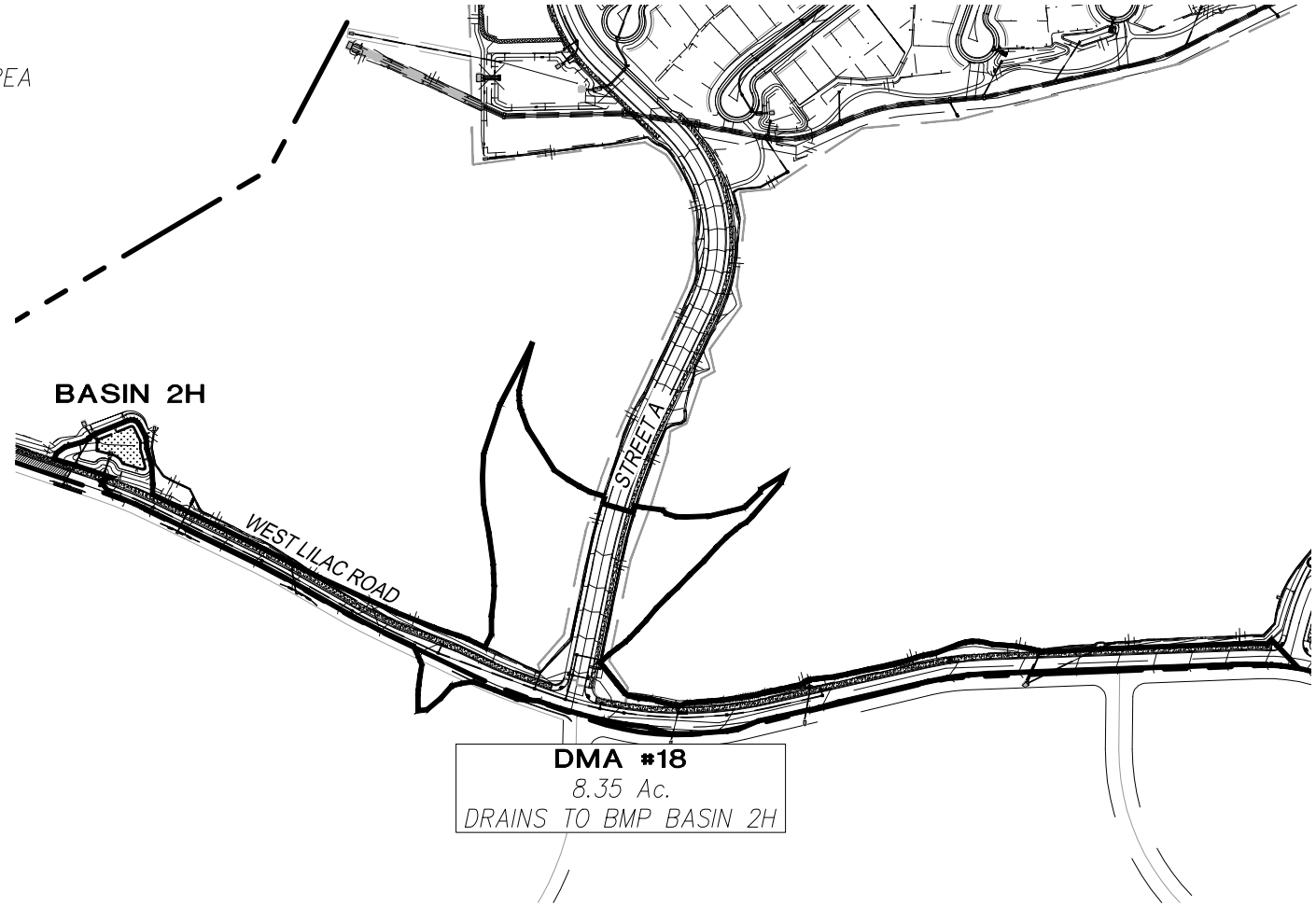


N

| | |
|---|---|
| SCALE: | 1"=400' |
| JOB #: | 4192.00 |
| CREATED: | 11/20/18 |

**COUNTY OF SAN DIEGO**

**OCEAN BREEZE RANCH**

***DMA MAPBOOK***
***DMA#18***

Q:\CA-SAND-PD\Projects\4192.10\Engr\Reports\SWQMP-FE\ATTACHMENTS\A2- DMA EXHIBITS & CONST. PLAN SHEETS\MAP BOOK\4192 DMA Mapbook - DMAs 16-19.dwg 11/7/2024 7:24:52 AM

# LEGEND:

DRAINAGE MANAGEMENT AREA

PROPOSED BMP

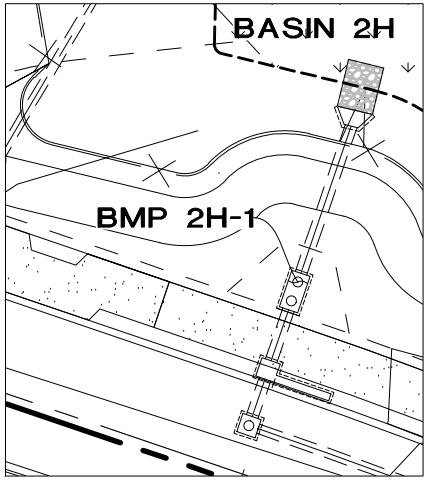


BMP 2H-1 DETAIL
SCALE 1"=40'

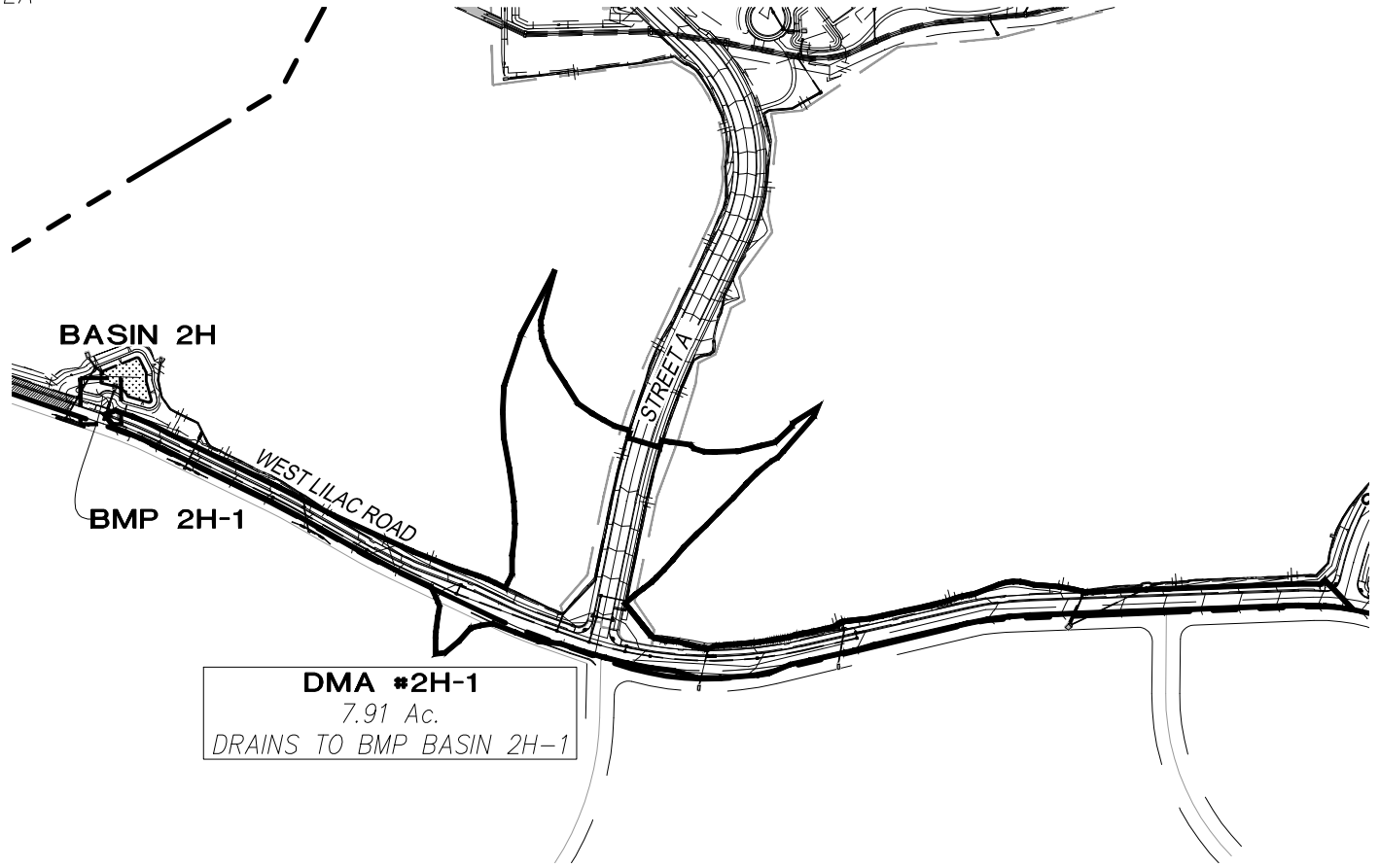


**DMA #2H-1**
7.91 Ac.
DRAINS TO BMP BASIN 2H-1

N

| | |
|---|---|
| SCALE: | 1"=400' |
| JOB #: | 4192.00 |
| CREATED: | 11/20/18 |

**COUNTY OF SAN DIEGO**

**OCEAN BREEZE RANCH**

***DMA MAPBOOK***
***DMA#2H-1***

Q:\CA-SAND-PD\Projects\4192.10\Engr\Reports\SWQMP-FE\ATTACHMENTS\A2- DMA EXHIBITS & CONST. PLAN SHEETS\MAP BOOK\4192 DMA Mapbook - DMAs 16-19.dwg 11/7/2024 7:26:17 AM

# LEGEND:

DRAINAGE MANAGEMENT AREA

PROPOSED BMP

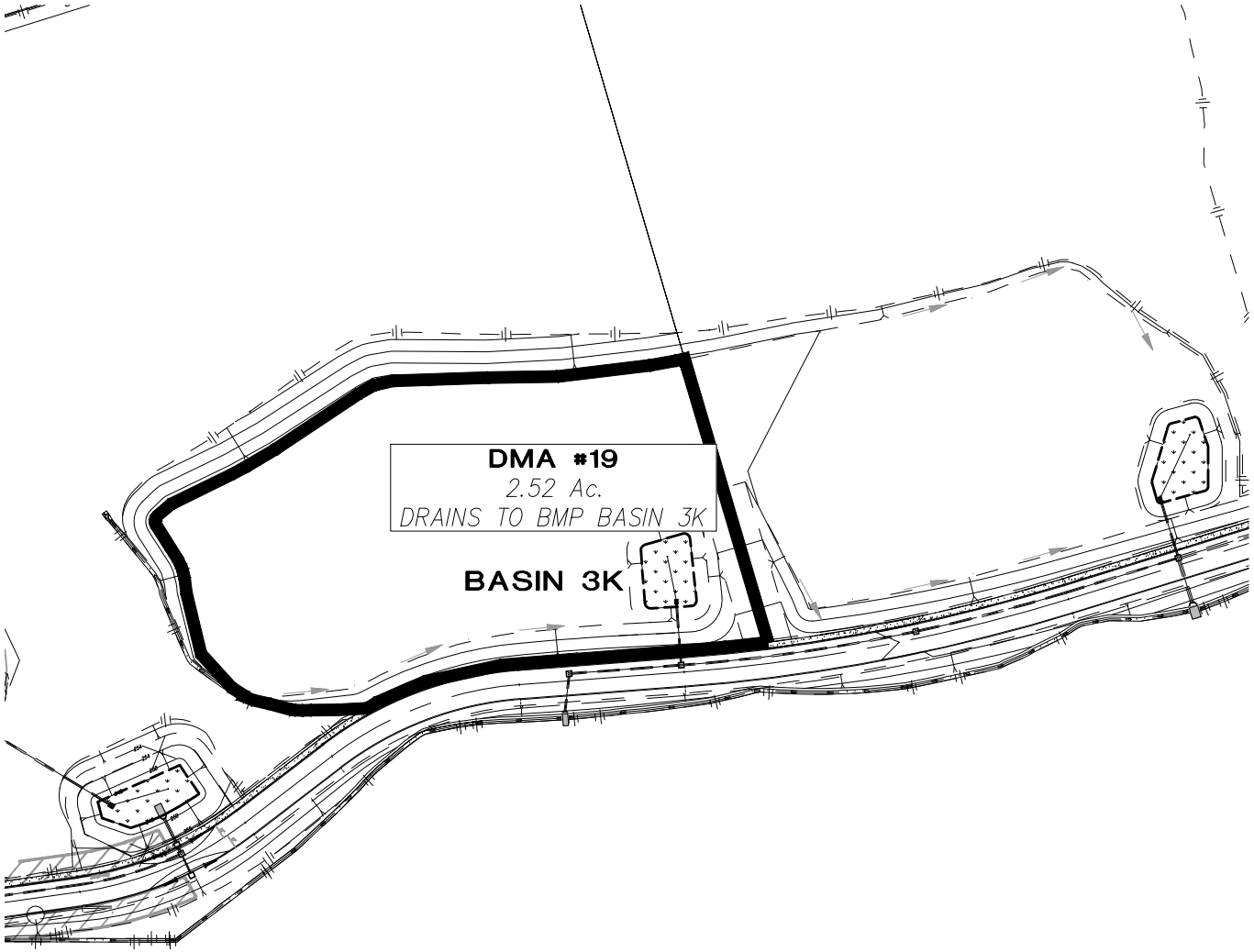


N

| | |
|---|---|
| SCALE: | 1"=150' |
| JOB #: | 4192.00 |
| CREATED: | 11/20/18 |

**COUNTY OF SAN DIEGO**

**OCEAN BREEZE RANCH**

***DMA MAPBOOK***
***DMA#19***

Q:\CA-SAND-PD\Projects\4192.10\Engr\Reports\SWQMP-FE\ATTACHMENTS\A2- DMA EXHIBITS & CONST. PLAN SHEETS\MAP BOOK\4192 DMA Mapbook - DMAs 16-19.dwg 11/7/2024 7:28:13 AM

## LEGEND:

DRAINAGE MANAGEMENT AREA

PROPOSED BMP

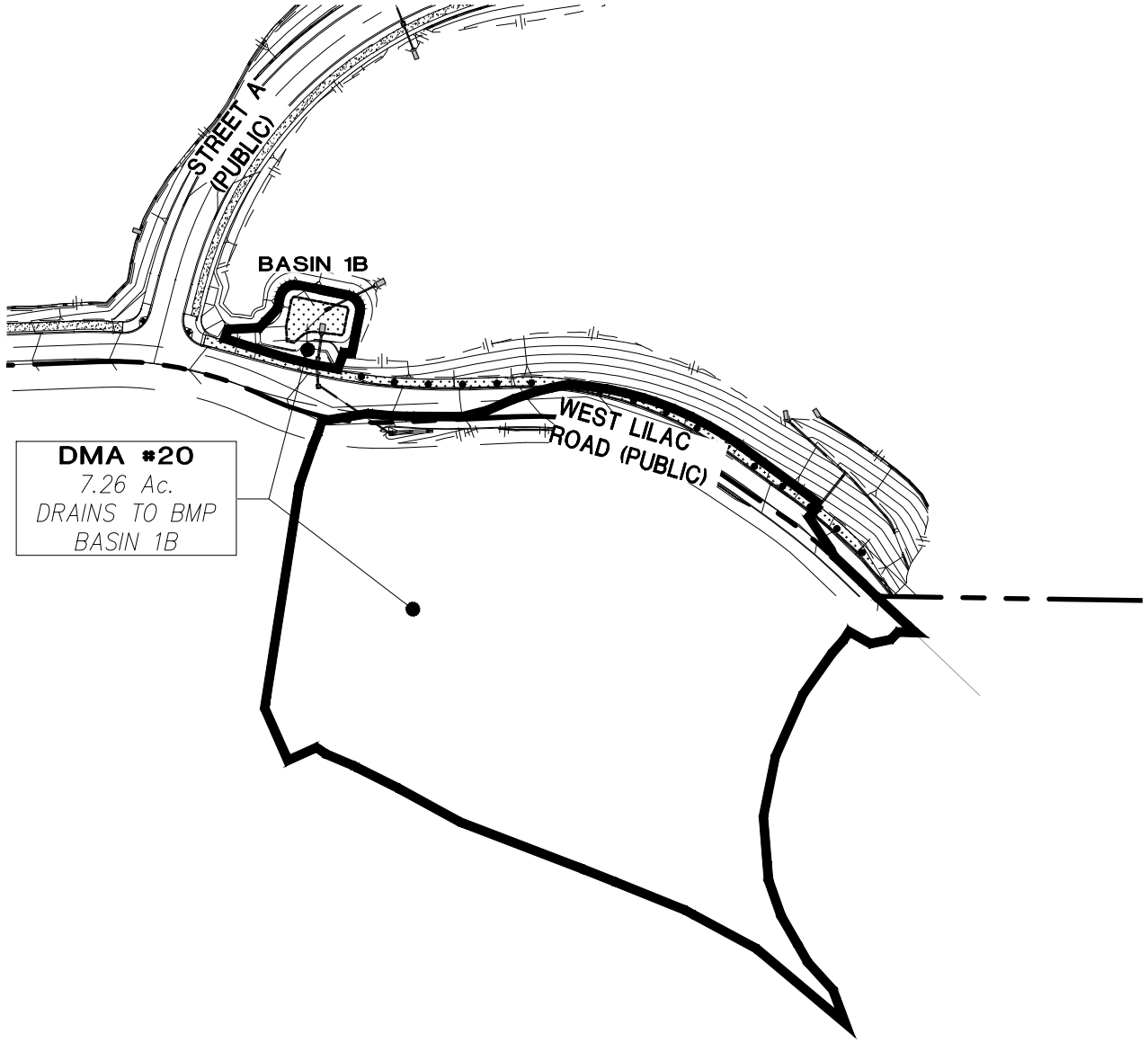


N

| | |
|---|---|
| SCALE: | 1"=200' |
| JOB #: | 4192.00 |
| CREATED: | 11/20/18 |

**COUNTY OF SAN DIEGO**

**OCEAN BREEZE RANCH**

***DMA MAPBOOK***
***DMA#20***

Q:\CA-SAND-PD\Projects\4192.10\Engr\Reports\SWQMP-FE\ATTACHMENTS\A2- DMA EXHIBITS & CONST. PLAN SHEETS\MAP BOOK\4192 DMA Mapbook - DMAs 16-19.dwg 11/7/2024 7:29:57 AM

## LEGEND:

DRAINAGE MANAGEMENT AREA

PROPOSED BMP

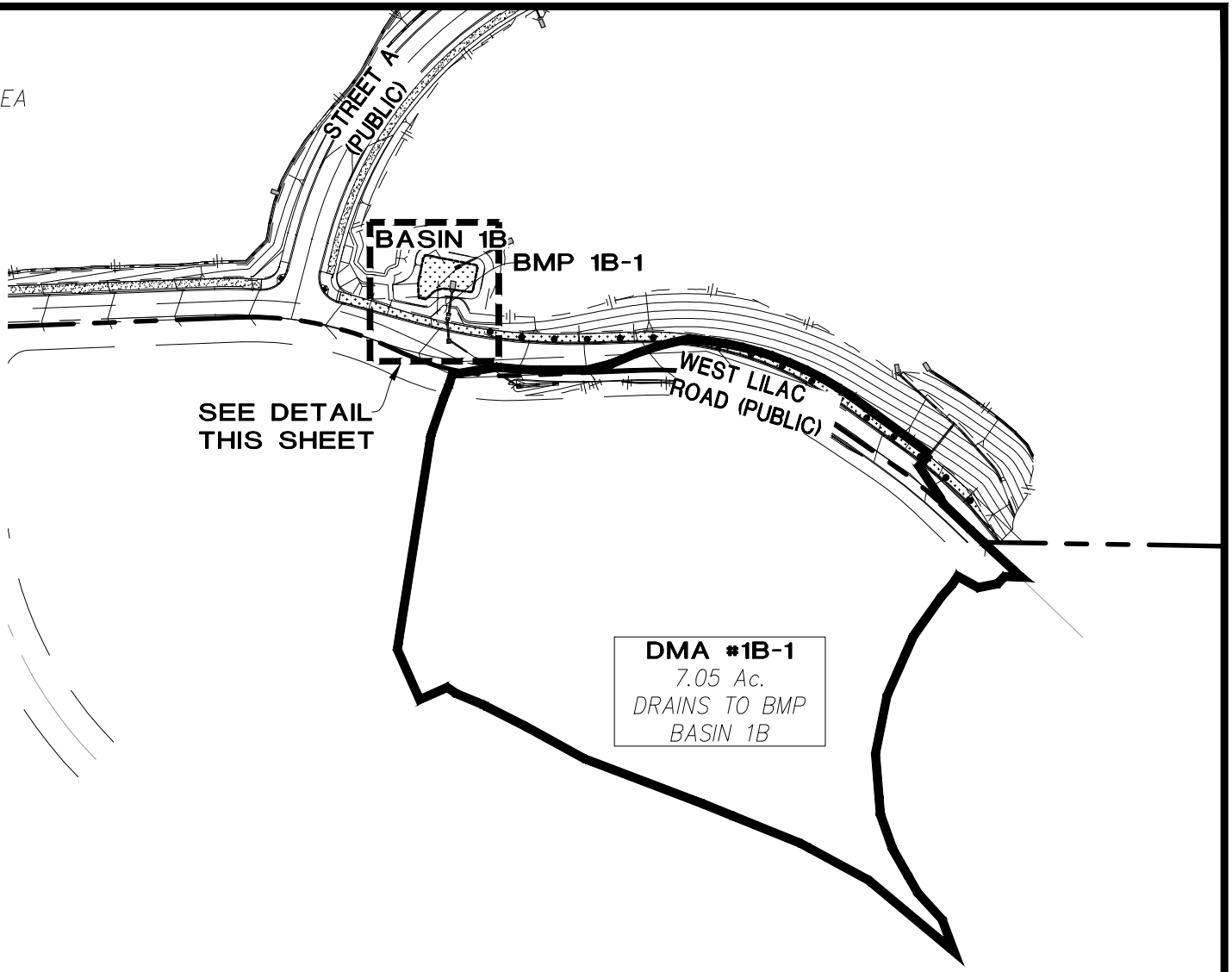


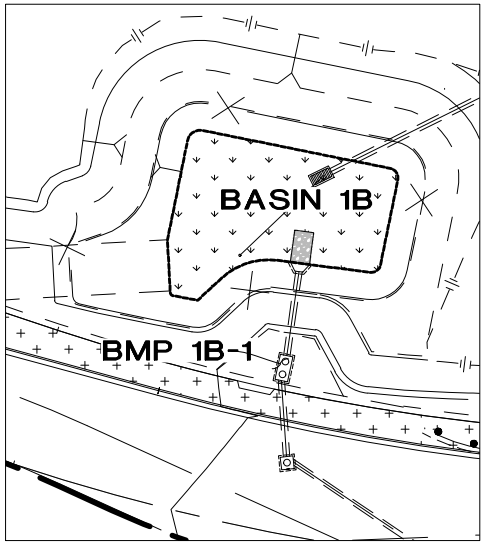


BMP 1B-1 DETAIL
SCALE 1"=60'

N

| | |
|---|---|
| SCALE: | 1"=200' |
| JOB #: | 4192.00 |
| CREATED: | 11/20/18 |

**COUNTY OF SAN DIEGO**

**OCEAN BREEZE RANCH**

***DMA MAPBOOK***
***DMA#1B-1***

Q:\CA-SAND-PD\Projects\4192.10\Engr\Reports\SWQMP-FE\ATTACHMENTS\A2- DMA EXHIBITS & CONST. PLAN SHEETS\MAP BOOK\4192 DMA Mapbook - DMAs 16-19.dwg 11/7/2024 7:29:20 AM

# LEGEND:

DRAINAGE MANAGEMENT AREA

PROPOSED BMP

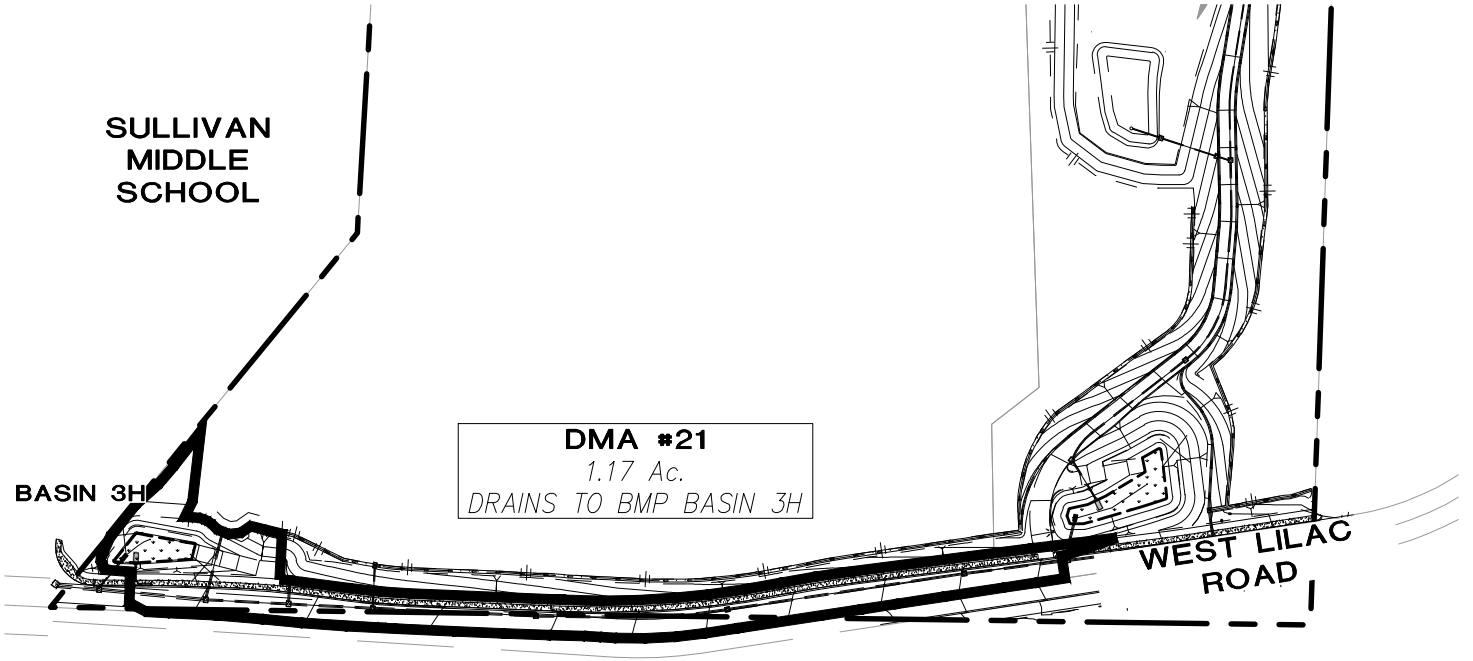


N

| | |
|---|---|
| SCALE: | 1"=200' |
| JOB #: | 4192.00 |
| CREATED: | 11/20/18 |

**COUNTY OF SAN DIEGO**

**OCEAN BREEZE RANCH**

***DMA MAPBOOK***
***DMA#21***

Q:\CA-SAND-PD\Projects\4192.10\Engr\Reports\SWQMP-FE\ATTACHMENTS\A2- DMA EXHIBITS & CONST. PLAN SHEETS\MAP BOOK\4192 DMA Mapbook - DMAs 16-19.dwg 11/7/2024 7:33:04 AM

# LEGEND:

DRAINAGE MANAGEMENT AREA

PROPOSED BMP

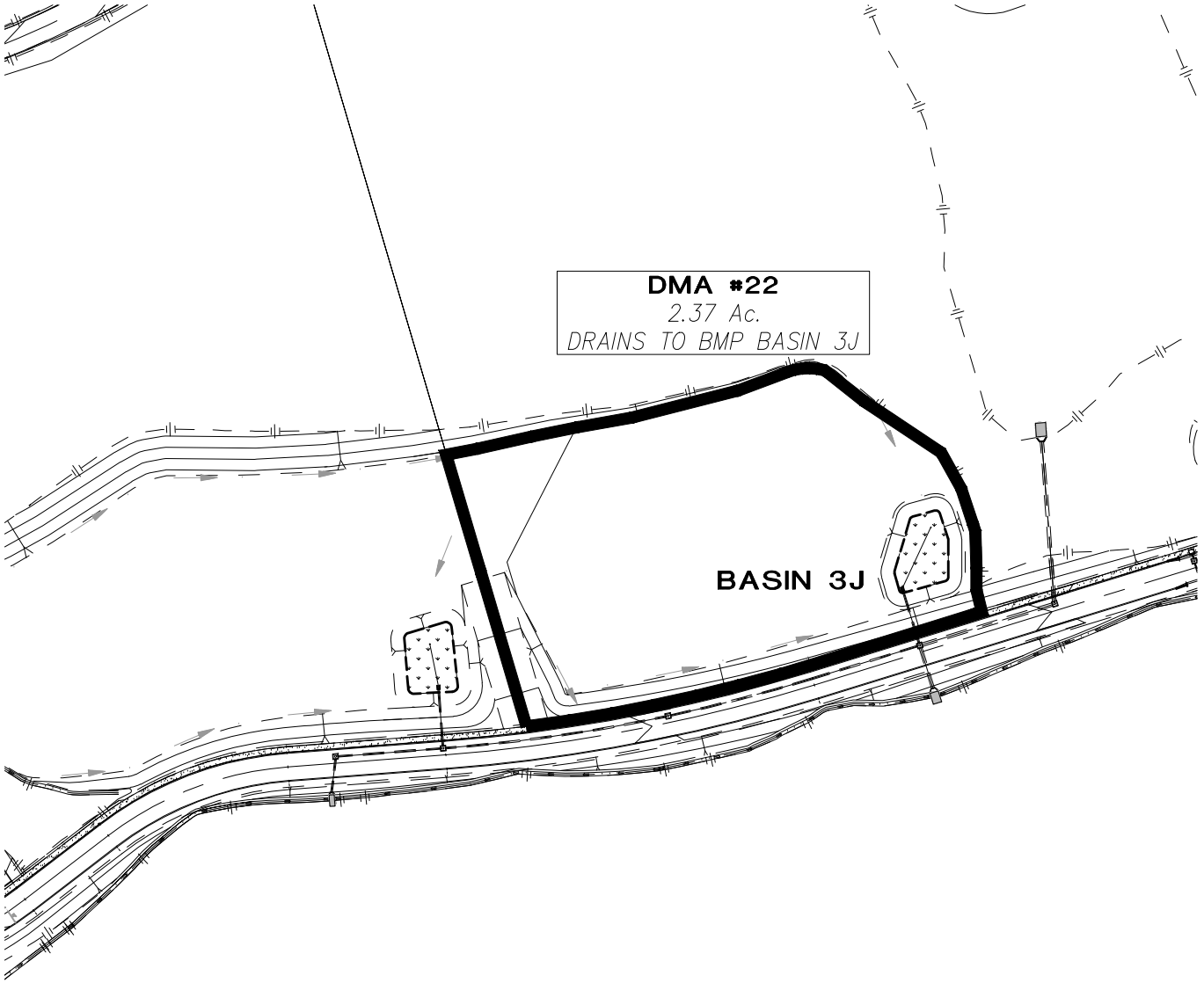


N

| | |
|---|---|
| SCALE: | 1"=150' |
| JOB #: | 4192.00 |
| CREATED: | 11/20/18 |

**COUNTY OF SAN DIEGO**

**OCEAN BREEZE RANCH**

***DMA MAPBOOK***
***DMA#22***

Q:\CA-SAND-PD\Projects\4192.10\Engr\Reports\SWQMP-FE\ATTACHMENTS\A2- DMA EXHIBITS & CONST. PLAN SHEETS\MAP BOOK\4192 DMA Mapbook - DMAs 16-19.dwg 11/7/2024 7:33:41 AM