CEQA DRAINAGE STUDY

VALIANO

PDS2013-SP-13-001, PDS2013-GPA-13-011,
PDS2013-STP-13-003, PDS2013-TM-5575,
PDS2013-REZ-13-001, PDS2013-ER-12-08-002

NOVEMBER 2015

County of San Diego, California

prepared for:

The Eden Hills Project Owner LLC
2235 Encinitas Blvd
Suite 216
760.944.7511

prepared by:

Fuscoe Engineering, Inc.
6390 Greenwich Drive, Suite 170
San Diego, California 92122
858.554.1500

www.fuscoe.com

Job # 02690-007-02

full circle thinking®

CEQA Drainage Study

For

Valiano

County of San Diego, CA

PDS2013-SP-13-001, PDS2013-GPA-13-011, PDS2013-STP-13-003,
PDS2013-TM-5575, PDS2013-REZ-13-001, PDS2013-ER-12-08-002

November 2015

Prepared for

The Eden Hills Project Owner LLC
2235 Encinitas Blvd
Suite 216
760.944.7511

Prepared by:

Kenneth T. Kozlik
Fuscoe Engineering, Inc.
6390 Greenwich Drive, Suite 170
San Diego, CA 92122
858.554.1500

PREPARED BY:

Kenneth T. Kozlik, P.E. RCE 71883 EXP. 12-31-15
Fuscoe Engineering - San Diego, Inc.

TABLE OF CONTENTS

Introduction

Project Description……1

Existing Condition……2

Proposed Condition……2

Geotechnical Conditions ……2

Methodology ……3

Rational Method…… ……3

Runoff Coefficient……4

Rainfall Intensity……5

Tributary Area……5

Calculations / Results ……5

Hydrologic Basin Flowrates……5

Detention Basin Design……6

100 Year Floodplain Analysis……8

Hill Valley Road Analysis……9

Conclusion……10

Appendices:

Appendix A – Declaration of Responsible Charge
Appendix B – Major Hydrologic Basin Exhibit
Appendix C – Hydrology Manual Excerpts
100 Year, 6 Hour Isopluvial Map
100 Year, 24 Hour Isopluvial Map
Table 3-1
Appendix D – AES Analysis
Existing Conditions Coding Summary
Existing Conditions AES Output
Proposed Conditions Coding Summary
Proposed Conditions AES Output
Appendix E – Detention Basin Analysis
Extended Detention Basin Outlet Structure Details
Detention Basin Analysis Output

Appendix F – HEC RAS Analysis
Excerpts from Drainage Study for Harmony Grove Village
Valiano Neighborhood 5 100 Year Storm Inundation Exhibit
Background For Mannings Coefficient Selection
Neighborhood 5 Existing Conditions Results
Neighborhood 5 Existing Conditions Cross Sections
Neighborhood 5 Proposed Conditions Results
Neighborhood 5 Proposed Conditions Cross Sections
Valiano Neighborhood 3 100 Year Storm Inundation Exhibit
Neighborhood 3 Culvert Analysis
Neighborhood 3 Proposed Conditions Results
Neighborhood 3 Proposed Conditions Cross Sections
HEC-RAS Files

Appendix G – Hill Valley Road Analysis
San Dieguito Community Plan Area – C Value Reference
Hill Valley Road Basin Coding Summary
Hill Valley Road AES Output
Existing Conditions Culvert Analysis
Proposed Conditions Culvert Analysis
Hill Valley Road Crossing Exhibit

Appendix H – Map Pocket
Existing Conditions Hydrology Exhibit
Proposed Conditions Hydrology Exhibit
Valiano Neighborhood 5 100 Year Storm Inundation Exhibit
Valiano Neighborhood 3 100 Year Storm Inundation Exhibit

INTRODUCTION

Project Description:
The Valiano project proposes to construct 326 single family dwelling units on 6 parcels with a cumulative area of 239 acres in the County of San Diego, California. The existing site consists of flat and mountainous terrain and is located on the southwestern corner of Country Club Drive and Hill Valley Drive. The site is located in the unincorporated community of "Eden Valley", primarily comprised of single family residential and equestrian land uses. Reference the Vicinity Map below for a detailed map of the project site.

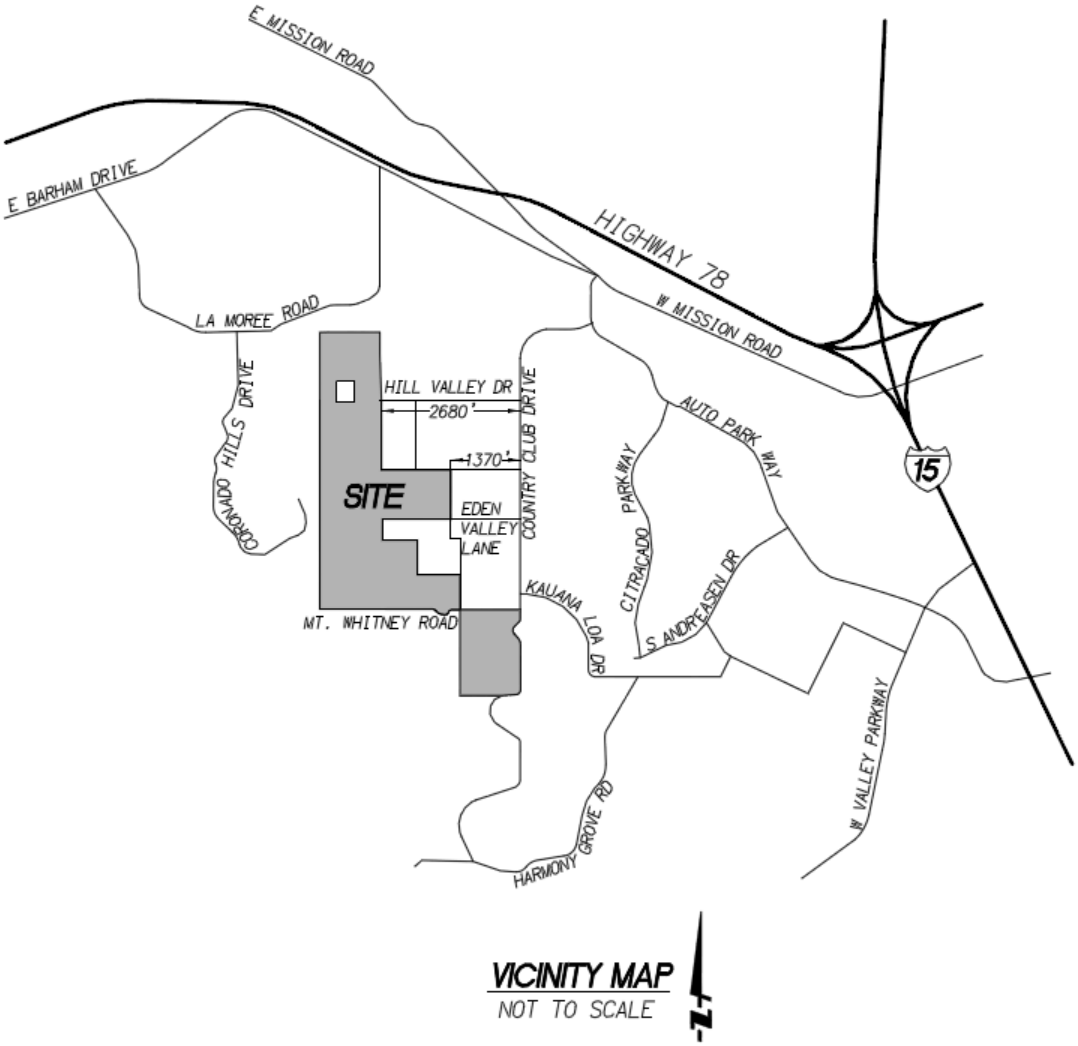

Private streets within the project consist of one main road that traverses the project from North to South and connects each of the four neighborhoods, and numerous private streets that provide access to the lots within each neighborhood. The two primary access points to the project will be from Eden Valley Lane and Mt. Whitney Road. The southeasterly portion of the project is accessed via private roads from Country Club Drive.

Existing Conditions:

Due to the hillside nature of the site, runoff from the project site splits into several major drainage basins. These basins are delineated in the Existing Hydrology Exhibit in Appendix H.

Basin A encompasses the southwesterly corner of the project site, and includes offsite areas to the west of the project. Flows in this basin drain to the south in a natural drainage channel. This channel continues south through agricultural and undeveloped land, including multiple agricultural ponds, before discharging to Escondido Creek south of the project site.

Basin B consists of the south-central and southeasterly portions of the project site. Basin B includes offsite areas to the west of the project boundary and areas adjacent to the southeasterly portion of the project. Runoff from this basin is collected a natural channel which runs roughly southeasterly through the site, and exits the site near the southeasterly corner. From there, the channel runs south to a confluence point with Basin A and eventually to Escondido Creek. Like Basin A, runoff from Basin B flows through agricultural and undeveloped land, including agricultural ponds, on its path the Escondido Creek.

Basin C originates near the high point of the mountains to the west of the project site, and flows easterly through the central portion of the project site. Runoff from Basin C exits the project site at the easterly property line in the central portion of the site. From there, it flows southeasterly to a confluence with Basin B, and then ultimately to Escondido Creek. Basin C consists of undeveloped, agricultural, and residential land. Runoff in Basin C travels primarily through natural and unlined channels, with culverts at road crossings downstream of the project site.

Basins D and E encompasses the northerly portion of the project site, and drain in an easterly direction. After exiting the project site, runoff flows in a southeasterly direction to an offsite confluence with flows from Basin C, and ultimately to Escondido Creek.

Proposed Conditions:

Due to the project's location on the hills bordering a valley, the site accepts runoff from the adjacent hills to the west. There is also a good deal of open space which will be preserved within the project, as well as graded slopes which will have no impervious area. Where possible, the offsite drainages and onsite pervious areas will be provided with separate drainage systems, which will prevent the mingling of runoff from these areas with runoff from the developed areas of the site.

The drainage management strategy for the project utilizes multifunction extended detention basins to provide water quality treatment, hydromodification mitigation, and peak detention for the developed portions of the site. At locations where the project proposes to increase un-mitigated post-development flows to a project discharge point, an extended detention basin was then designed to mitigate the impacts of the increase. The detention basins then discharge to the natural drainage courses. Where it discharges to a natural drainage course, appropriately sized energy dissipation will be provided. Energy dissipation will be sized at the time of final engineering.

Geotechnical Conditions:

Geotechnical investigations were prepared for the project site by Geocon, dated September 12, 2012 and December 12, 2012. The surficial site soils encountered include undocumented fill, topsoil, colluvium, alluvium, and Terrace Deposits. These were underlain by formational materials consisting of the Santiago Formation, granitic rock, and metamorphic rock. The formational materials were generally encountered at depths of 1-15' below the ground surface. To determine the Hydrologic Soils Group for the project, data from the Natural Resources Conservation Service (NRCS) was utilized. According to NRCS data, Hydrologic Soil Groups B, C, and D are present within the project.

In order to conservatively size the storm drain facilities and in consideration of the shallow bedrock with is present under much of the developed area, Hydrologic Soil Group D is assumed for the entire project.

METHODOLOGY

Runoff calculations for the Valiano project have been performed in accordance with the 2003 County of San Diego Hydrology Manual (Manual). The AES-2012 computer program was used to calculate the peak runoff from the 100-year, 6 hour storm event using the rational method. Please refer to Appendix C for pertinent excerpts from the Manual, and Appendix D for the results of these calculations.

Rational Method:
As mentioned above, runoff on the project site was calculated for the 100-year storm event. Runoff was calculated using the Rational Method which is given by the following equation:

$Q = C \times I \times A$

Where:
Q = Flow rate in cubic feet per second (cfs)
C = Runoff coefficient
I = Rainfall Intensity in inches per hour (in/hr)
A = Drainage basin area in acres, (ac)

Rational Method calculations were performed using the AES-2012 computer program. To perform the hydrology routing, the total watershed area is divided into sub-areas which discharge at designated nodes. The procedure for the sub-area summation model is as follows:

(1) Subdivide the watershed into an initial sub-area (generally 1 lot) and subsequent sub-areas, which are generally less than 10 acres in size. Assign upstream and downstream node numbers to each sub-area.

(2) Estimate an initial T_c by using the appropriate nomograph or overland flow velocity estimation. The minimum T_c considered is 5.0 minutes.

(3) Using the initial T_c, determine the corresponding values of I. Then Q = CIA.

(4) Using Q, estimate the travel time between this node and the next by Manning's equation as applied to particular channel or conduit linking the two nodes. Then, repeat the calculation for Q based on the revised intensity (which is a function of the revised time of concentration)

The nodes are joined together by links, which may be street gutter flows, drainage swales, drainage ditches, pipe flow, or various channel flows. The AES-2010 computer sub-area menu is as follows:

SUBAREA HYDROLOGIC PROCESS

1. Confluence analysis at node.
2. Initial sub-area analysis (including time of concentration calculation).
3. Pipe flow travel time (computer estimated).

4. Pipe flow travel time (user specified).
5. Trapezoidal channel travel time.
6. Street flow analysis through sub-area.
7. User-specified information at node.
8. Addition of sub-area runoff to main line.
9. V-gutter flow through area.
10. Copy main stream data to memory bank
11. Confluence main stream data with a memory bank
12. Clear a memory bank

At the confluence point of two or more basins, the following procedure is used to combine peak flow rates to account for differences in the basin's times of concentration. This adjustment is based on the assumption that each basin's hydrographs are triangular in shape.

(1). If the collection streams have the same times of concentration, then the Q values are directly summed,

$$Q_p = Q_a + Q_b;\ T_p = T_a = T_b$$

(2). If the collection streams have different times of concentration, the smaller of the tributary Q values may be adjusted as follows:

(i). The most frequent case is where the collection stream with the longer time of concentration has the larger Q. The smaller Q value is adjusted by a ratio of rainfall intensities.

$$Q_p = Q_b + Q_a\,(I_b/I_a);\ T_p = T_a$$

(ii). In some cases, the collection stream with the shorter time of concentration has the larger Q. Then the smaller Q is adjusted by a ratio of the T values.

$$Q_p = Q_b + Q_a\,(T_b/T_a);\ T_p = T_b$$

Runoff Coefficient:

The runoff coefficient for the project was calculated using the following formula given in Section 3.1.2 of the Manual:

$C = 0.90 \times (\%\ \text{Impervious}) + [C_p \times (1 - \%\ \text{Impervious})]$

The value of C_p varies based on the hydrologic soil group of the underlying soils. Hydrologic soil group D was assumed for all areas as this is the prevalent soil group near the project site. Group D soils have very slow infiltration rates when thoroughly wetted. Consisting chiefly of clay soils with a high swelling potential, soils with a high permanent water table, soils with clay pan or clay layer at or near the surface, and shallow soils over nearly impervious materials, Group D soils have a very slow rate of water transmission. The value of C_p for Group D soils is 0.35.

Of the total developed area, approximately 65% is impervious. This includes the buildings, roads, sidewalks, and other various hardscape. A corresponding C factor of 0.71 was used for all developed areas.

For the offsite tributary area to the Hill Valley Road crossing, a C value was selected based on the housing densities allowed in the General Plan. Per the San Dieguito Community Plan Area map included in Appendix G, the land use designations for this area are SR-1 and SR-2. The maximum density allowed in these land uses is 1 du/acre. The soils in this offsite basin are primarily Group C. The runoff coefficient which corresponds to a density of 1 du/acre and Group C soils is 0.36.

Rainfall Intensity:
Rainfall intensity was calculated using the following equation, which is given in the Manual:

$I = 7.44 \times P_6 \times (Tc^{-0.645})$

Where:
I = Rainfall Intensity in inches per hour (in/hr)
P_6 = Rainfall in inches for the 6-hour storm event = 3.2 inches
Tc = Time of concentration in minutes

Travel times between hydrology nodes were calculated by the AES-2012 computer program. For pipe flow, a Manning's N value of 0.013 was used to reflect the use of HDPE pipe. For flows in concrete ditches and streets, an N value of 0.015 was used.

Tributary Area:
Drainage basins are delineated on the Major Hydrologic Basin Exhibit found in Appendix B which graphically portrays the tributary area for each basin. The project was graded in a manner such that the proposed drainage patterns closely match that of the existing conditions.

Hydrologic Basin	Existing Area (ac)	Proposed Area (ac)	Δ
A	26.8	26.8	0
B	214.8	217.7	+2.9
C	173.5	173.3	-0.2
D	49.1	47.0	-2.1
E	11.0	10.7	-0.3

Extended Detention Basins are located throughout the site which will be used for Hydromodification and 100 year storm attenuation to ensure that the runoff will be greater than or equal to the runoff in the existing condition.

CALCULATIONS/RESULTS

Hydrologic Basin Flowrates:
AES was used to calculate both the existing and proposed flows during a 100 year storm. As you can see in the tables below, each hydrologic basin sees an increase in 100 year flow if no detention is present. This increase in flow will be mitigated through the use of a system of extended detention basins which will be used for both hydromodification and detaining 100 year storms.

Hydrologic Basin A: AES Results at Discharge from Project (Proposed Node 115)

	Existing	Proposed	Δ
A	26.8 ac	26.7 ac	-0.1 ac
Tc	10.3 min	10.0 min	-0.3 min
Q_{100}	48.1 cfs	55.7 cfs	**+7.6 cfs**

Hydrologic Basin B: AES Results at Discharge from Project (Proposed Node 2200)

	Existing	Proposed	Δ
A	214.8 ac	217.7 ac	+2.8 ac
Tc	18.8 min	14.3 min	-4.5 min
Q_{100}	297.4 cfs	465.6 cfs	**+168.2 cfs**

Hydrologic Basin C: AES Results at Discharge from Project (Proposed Node 3013)

	Existing	Proposed	Δ
A	173.5 ac	173.3 ac	-0.2 ac
Tc	16.8 min	12.4 min	-3.5 min
Q_{100}	237.9 cfs	340.0 cfs	**+102.1 cfs**

Hydrologic Basin D: AES Results at Discharge from Project (Proposed Node 439)

	Existing	Proposed	Δ
A	49.1 ac	47.0 ac	-2.1 ac
Tc	12.1 min	9.8 min	-2.3 min
Q_{100}	82.0 cfs	114.9 cfs	**+32.9 cfs**

Hydrologic Basin E: AES Results at Discharge from Project (Proposed Node 608)

	Existing	Proposed	Δ
A	11.0 ac	10.7 ac	-0.3 ac
Tc	8.9 min	9.6 min	+0.7 min
Q_{100}	22.5 cfs	22.0 cfs	**-0.5 cfs**

Detention Basin Design

The Valiano project is subject to hydromodification mitigation under the Final Hydromodification Management Plan for the County of San Diego, dated March 2011. The goal of hydromodification mitigation is to reduce erosion in downstream receiving waters from increased runoff rates and durations during small and medium sized storm events. The Valiano project proposes to use extended detention ponds with a bioretention layer as Low Impact Development (LID) BMPs to mitigate the effects of hydromodification. These LID BMPs have been sized for both water quality treatment and hydromodification flow control. A detailed analysis of the hydromodification flow control aspects of the LID BMPs can be found in the project's Hydromodification Management Study, dated November 2014, by Fuscoe Engineering.

Once the extended detention ponds were sized per hydromodification critera, using Brown and Caldwell's "Hydromodification Calculator", the basin was analyzed to see how it would perform during a 100 year storm event. A model storm event was created for each basin by inputting the AES hydrology results into Rick Rat Hydro. This information was used in the "Retarding Basin Routing Analysis" module of AES to define a basin inflow hydrograph. Stage, storage and discharge information was defined based off of contour areas for each foot of depth, orifice size and depth per the Hydromodification Calculator results, as well as weir heights and length. The basin routing module was then run, providing an outflow hydrograph which included post-detention output for each basin, maximum depths of ponding and the corresponding time periods required for each to occur. A table summarizing these results is shown below. Refer to Appendix E for the full results.

Hydraflow Detention Basin Analysis Results

Hydrologic Basin A

Extended Detention Basin	Undetained Peak Q (cfs)	Detained Peak Q (cfs)	ΔQ Peak (cfs)	Max Depth (feet)	Time to peak (hrs)
1	15.2	1.5	-13.7	3.0	4.4 hrs
	Total attenuation		-13.7 cfs		

Hydrologic Basin B

Extended Detention Basin	Undetained Peak Q (cfs)	Detained Peak Q (cfs)	ΔQ Peak (cfs)	Max Depth (feet)	Time to peak (hrs)
2A	15.6	1.4	-14.2	2.9	4.4
2B	27.6	9.3	-18.3	4.1	4.2
2C	55.2	13.3	-41.9	4.7	4.2
2D	8.9	2.8	-6.1	2.1	4.2
2E	29.1	9.7	-19.4	4.2	4.4
5A	42.5	6.1	-36.4	3.1	4.3
5B	24.5	7.9	-16.6	3.9	4.2
5C	20.6	7.3	-13.3	2.5	4.3
5D	18.6	16.5	-2.1	3.7	4.4
	Total attenuation		-168.3 cfs		

Hydrologic Basin C

Basin	Undetained Peak Q (cfs)	Detained Peak Q (cfs)	ΔQ Peak (cfs)	Max Depth (feet)	Time to peak (hrs)
3A	19.0	10.6	-8.4	2.5	4.2 hrs
3B	45.0	14.5	-30.5	6.3	4.2 hrs
3C	31.5	7.7	-23.8	3.7	4.2 hrs
3D	67.8	5.4	-62.4	3.5	4.6 hrs
	Total attenuation		-125.1cfs		

Hydrologic Basin D

Basin	Undetained Peak Q (cfs)	Detained Peak Q (cfs)	ΔQ Peak (cfs)	Max Depth (feet)	Time to peak (hrs)
4A	30.1	8.0	-22.1	4.2	4.3
4B	13.2	2.8	-10.4	1.7	4.3
	Total attenuation		-32.5 cfs		

As you can see in the results above, the extended detention ponds designed for hydromodification were capable of storing and discharging the 100 year storm event. As shown in the summary below, the attenuation provided by the detention basins was greater than the increase in flow expected from the development of the site, thus no downstream impacts are expected. Hydrologic Basin D does show a slight increase of 0.4 cfs from existing after accounting for detention. However, this is offset by the 0.5 cfs decrease from Basin E, which is adjacent to and upstream of Basin D.

Summary of Detention Provided

Hydrologic Basin A
Increase in Q_{100} due to development = +7.6 cfs
Decrease in Q_{100} from extended detention basin attenuation = -13.7 cfs
Hydrologic Basin B
Increase in Q_{100} due to development = +168.2 cfs
Decrease in Q_{100} from extended detention basin attenuation = -168.3 cfs
Hydrologic Basin C
Increase in Q_{100} due to development = +102.1 cfs
Decrease in Q_{100} from extended detention basin attenuation = -125.1 cfs
Hydrologic Basin D
Increase in Q_{100} due to development = +32.9 cfs
Decrease in Q_{100} from extended detention basin attenuation = -32.5 cfs
Decrease in Q_{100} from detention basins and Basin E= -33.0 cfs

100 Year Floodplain Analysis

A HEC-RAS analysis was completed for all areas of the project site with drainage basins larger than 100 acres. This includes the creek which crosses Mt. Whitney Road in the easterly portion of the project and runs through Neighborhood 5, as well as for the natural channel running through Neighborhood 3. For Neighborhood 5, cross sections were defined in HEC-RAS 4.1 for both the existing and proposed grading. The 100-year storm event flow (Q_{100}=1,636 cfs) was taken from the report entitled: "Final Design Onsite Drainage Study for Harmony Grove Village" by Rick Engineering dated October 13, 2011. Excerpts from this report can be found in Appendix F. The system of extended detention basins will detain flows such that the proposed condition will have runoff less than or equal to the existing condition; thus the same 100-year flows were used in both cases.

The existing creek has irregular wide side slopes and runs through a eucalyptus grove. The Manning's coefficient for the existing condition was estimated to be 0.10. In the proposed condition, some areas will be fuel management area, thus there will be less foliage and more weeds and small brush. The Manning's coefficient for the thinned areas was estimated to be 0.08. For protected areas of biological open space, the existing condition n value of 0.10 was used.

	Existing	Proposed (Biological Open Space)	Proposed (thinned)
Q_{100}	1,636	1,636	1,636
Mannings n	n=0.10	n=0.10	N=0.08

During the HEC-RAS analysis, it was determined that to ensure the roadway was not overtopped, a triple 12'x6' box culvert is required at the Mt. Whitney Road crossing, an arch bridge (28' span, 7' rise) is required at the northern Street 5A crossing, and an arch bridge (20' span, 7' rise) is required at the southern Street 5A crossing. Water surface elevations were calculated at each cross section, and pad elevations were checked to ensure that they were all a minimum of 12" above the flood water surface elevation. Additionally, the water surface elevations on the adjacent properties upstream of

Mt. Whitney Road were compared to ensure that there is no impact in 100-year water surface elevations on the adjacent properties. The installation of the triple 12'x6' box culverts under the proposed Mt. Whitney Road will result in negligible impacts to the water surface elevations at the existing structures to the north. Thus, the project will not impact flooding risk on these properties. The existing and proposed 100 year floodplains, along with their respective water surface elevations resulting from the HEC-RAS study are shown on the "Valiano Neighborhood 5 100 Year Storm Inundation Exhibit" which can be found in Appendix F. HEC-RAS files have also been provided in Appendix F for reference.

For the Neighborhood 3 floodplain analysis, only the proposed condition cross sections were analyzed in HEC-RAS. The flow rate was determined by the Basin C hydrology analysis. According to the AES analysis, node 309 at the confluence point where a total area 100 acres is reached has a proposed flow rate of 287 cfs, ignoring detention. For the HEC-RAS analysis, the flow was routed through cross sections generated from the existing topography and, where applicable, the proposed grading. Water surface elevations were calculated at each cross section, and pad elevations were checked to ensure that they were all a minimum of 12" above the flood water surface elevation. The proposed 100 year floodplains, along with water surface elevations resulting from the HEC-RAS study are shown on the "Valiano Neighborhood 3 100 Year Storm Inundation Exhibit" which can be found in Appendix F. HEC-RAS files have also been provided in Appendix F for reference.

Hill Valley Drive Analysis

To provide access to the northerly emergency access route to the site, the project proposes to pave the existing dirt road, Hill Valley Drive, from the project boundary east to the existing paved portion of Hill Valley Drive. As part of this work, the road will be raised six inches and paved with concrete at an existing dip section in the road where there is a 24" culvert crossing. To ensure that the proposed condition does not create adverse impacts, a hydrology and hydraulics analysis has been performed on this crossing. The hydrology calculations were performed in AES using the procedure described above. The total tributary area to the crossing is approximately 48.1 acres, and the 100-year peak flow is about 61.1 cfs. AES results and a hydrology exhibit for the Hill Valley Drive crossing can be found in Appendix G.

Both the existing and proposed road crossings were analyzed to determine the performance of the culvert. The culvert analysis was performed using the HY-8 software program, and the results are presented in Appendix G.

Under the existing conditions, the road acts as a dipped section per County of San Diego Design Standard DS-14 with a 24" diameter culvert, although it is substandard due to it not being paved. During a 100 year storm event the road is overtopped by 3 inches and has an upstream water surface elevation of 703.75.

In the proposed condition, the 24" culvert will remain in place and the road will continue to function as a dipped section per DS-14 although the road will be raised six inches and paved with concrete, thus bringing it up to standard. The concrete will reduce the potential of erosion and increase road safety. Under peak flow conditions the road again will be overtopped by 3 inches, and have an upstream water surface elevation of 704.24. The depth of overtopping multiplied by the velocity will be 2.2, which is in accordance with the DS-14 standard which requires it to be less than 6. The slight increase in upstream water surface elevation will have no impacts on the existing residences to the north.

CONCLUSION

The project's hydrologic basins were modeled in AES for both the existing and proposed conditions during a 100 year storm. AES results can be found in Appendix D. For the proposed condition, runoff from developed areas was routed to extended detention basins. Where possible, runoff from undeveloped areas was bypassed around the extended detention basins to avoid mingling until post-treatment. As shown in the Hydromodification Study, these basins were sized for both water quality treatment and hydromodification mitigation. The detention basins were analyzed and it was determined that they were all adequately sized to also be used for 100 year storm event attenuation. Results for the detention basin analysis can be found in Appendix E. Through the use of the detention basins, the flows leaving the site will be less than or equal to the existing condition. All proposed storm water facilities will be privately maintained by the project's homeowner's association.

A HEC-RAS study was conducted for the creek running through Neighborhood 5, as well as Neighborhood 3. It was determined that a triple 12'x6' box culvert is required at the Mt. Whitney Road crossing, an arch bridge (28' span, 7' rise) is required at the northern Street 5A crossing, and an arch bridge (20' span, 7' rise) is required at the southern Street 5A crossing. Water surface elevations were determined to check that the pad elevations were set sufficiently high enough to avoid any flooding during 100-year storms, and the water surface elevations will not have an impact on adjacent properties. Results from the HEC-RAS analysis can be found in Appendix F. The proposed road crossing on Hill Valley Drive was also analyzed. It was found that the proposed dipped road crossing will be in conformance with County Standards. Results of the Hill Valley Drive culvert analysis can be found in Appendix G.

Appendix A

Declaration of Responsible Charge

"DECLARATION OF RESPONSIBLE CHARGE"

I HEREBY DECLARE THAT I AM THE ENGINEER OF WORK FOR THIS PROJECT, THAT I HAVE EXERCISED RESPONSIBLE CHARGE OVER THE DESIGN OF THE PROJECT AS DEFINED IN SECTION 6703 OF THE BUSINESS AND PROFESSIONS CODE, AND THAT THE DESIGN IS CONSISTENT WITH CURRENT STANDARDS.

I UNDERSTAND THAT THE CHECK OF PROJECT DRAWINGS AND SPECIFICATIONS BY THE COUNTY OF SAN DIEGO DOES NOT RELIEVE ME, AS ENGINEER OF WORK, OF MY RESPONSIBILITIES FOR PROJECT DESIGN.

FUSCOE ENGINEERING, INC.
6390 GREENWICH DRIVE, SUITE 170
SAN DIEGO, CALIFORNIA 92122
(858) 554-1500

BY: _____

KENNETH T. KOZLIK, P.E.
R.C.E. NO.: 71883
REGISTRATION EXPIRATION DATE: DECEMBER 31, 2015

Appendix B

Major Hydrologic Basin Exhibit

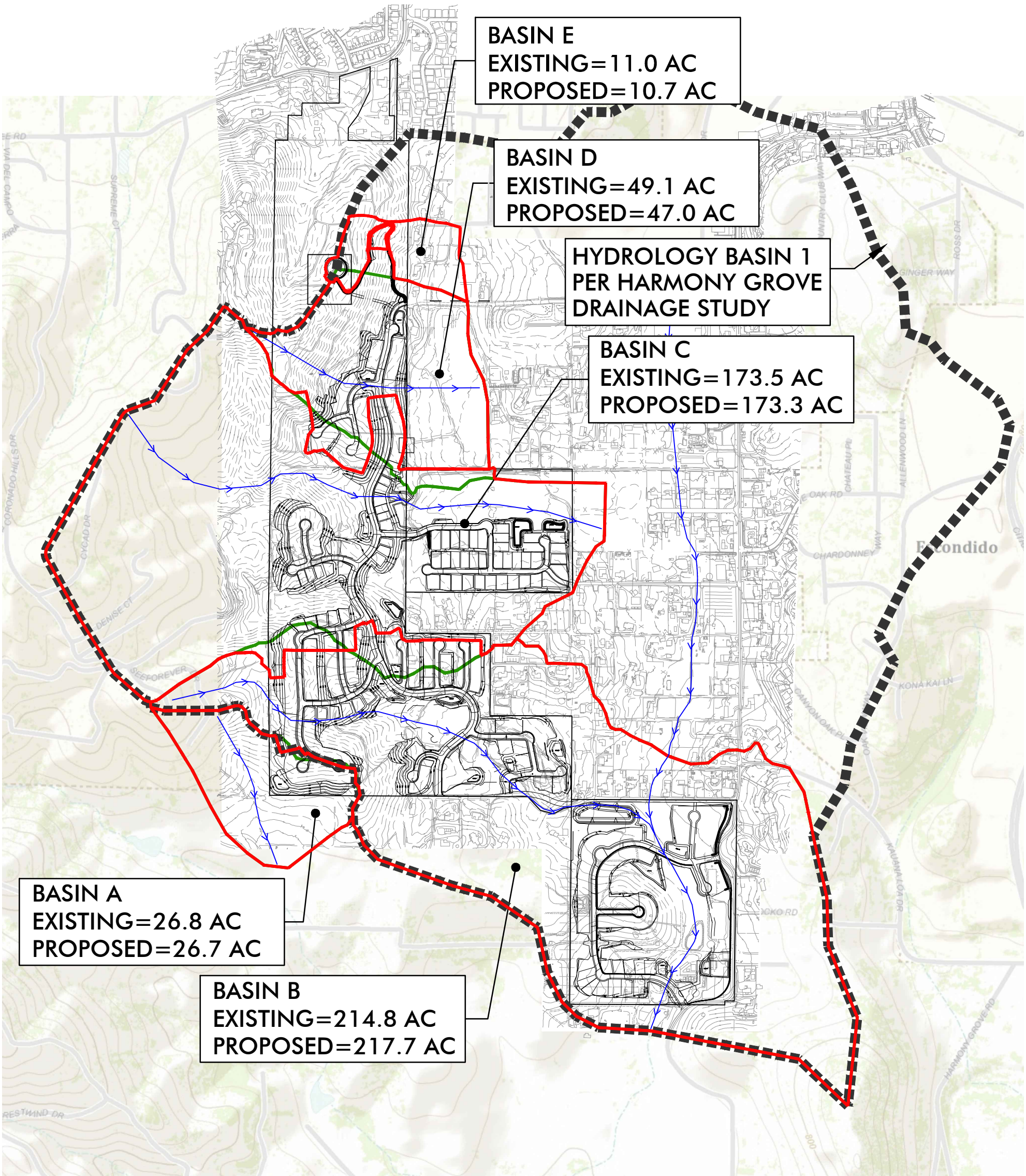

LEGEND

EXISTING BASIN BOUNDARY

EXISTING DRAINAGE PATTERN

PROPOSED BASIN BOUNDARY

BASIN 1 PER HARMONY GROVE DRAINAGE STUDY

SCALE: 1"= 800'

FUSCOE ENGINEERING
6390 Greenwich Drive, Suite 170
San Diego, California 92122
tel 858.554.1500 fax 858.597.0335
www.fuscoe.com

VALIANO
MAJOR HYDROLOGIC
BASIN EXHIBIT

Appendix C

<u>Hydrology Manual Excerpts</u>
100 Year, 6 Hour Isopluvial Map
100 Year, 24 Hour Isopluvial Map
Table 3-1

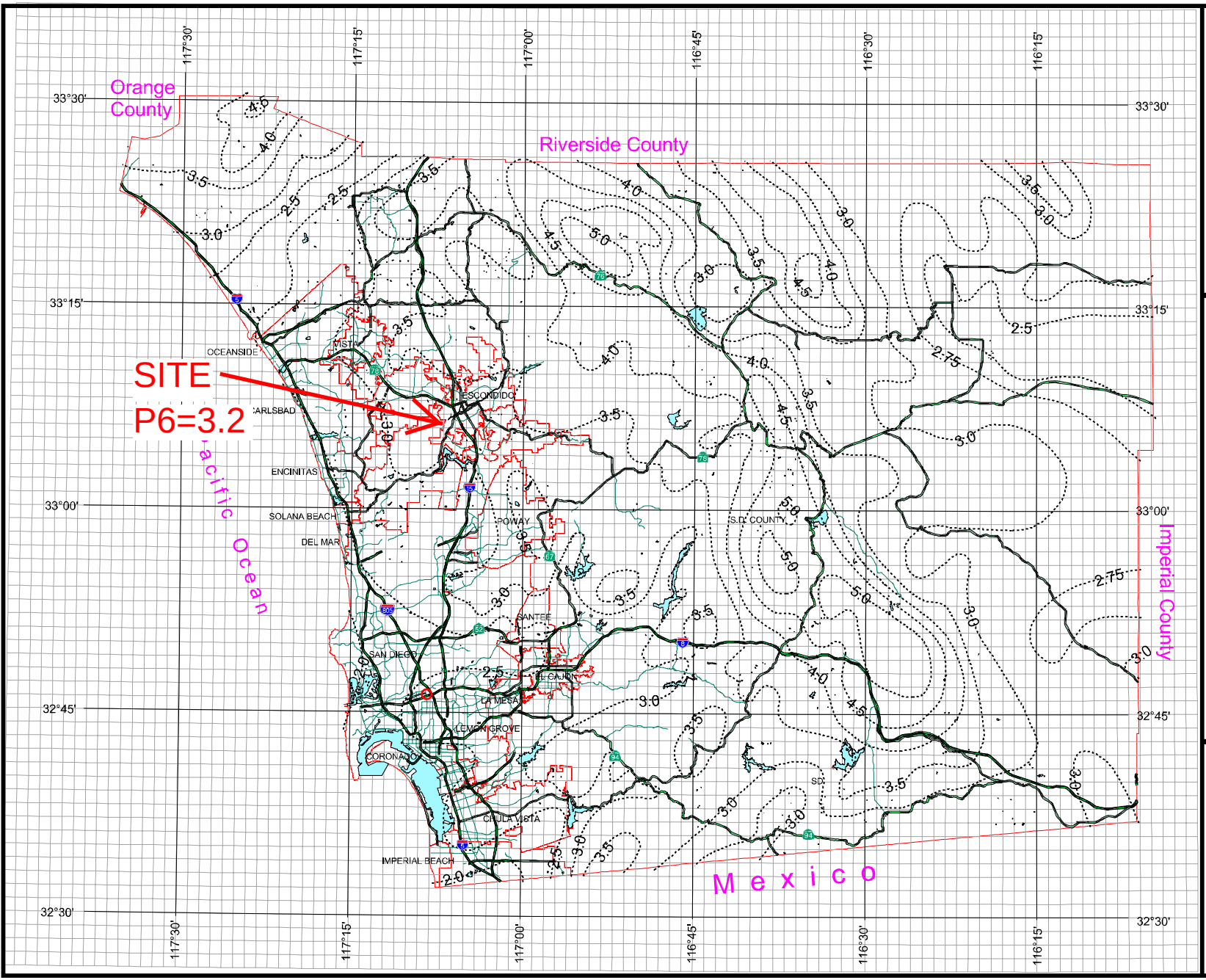

County of San Diego Hydrology Manual

Rainfall Isopluvials

100 Year Rainfall Event - 6 Hours

Isopluvial (inches)

DPW GIS
Department of Public Works
Geographic Information Services

SanGIS
We Have San Diego Covered!

N
W E
S

3 0 3 Miles

THIS MAP IS PROVIDED WITHOUT WARRANTY OF ANY KIND, EITHER EXPRESS OR IMPLIED, INCLUDING, BUT NOT LIMITED TO, THE IMPLIED WARRANTIES OF MERCHANTABILITY AND FITNESS FOR A PARTICULAR PURPOSE.
Copyright SanGIS. All Rights Reserved.

This products may contain information from the SANDAG Regional Information System which cannot be reproduced without the written permission of SANDAG.

This product may contain information which has been reproduced with permission granted by Thomas Brothers Maps.

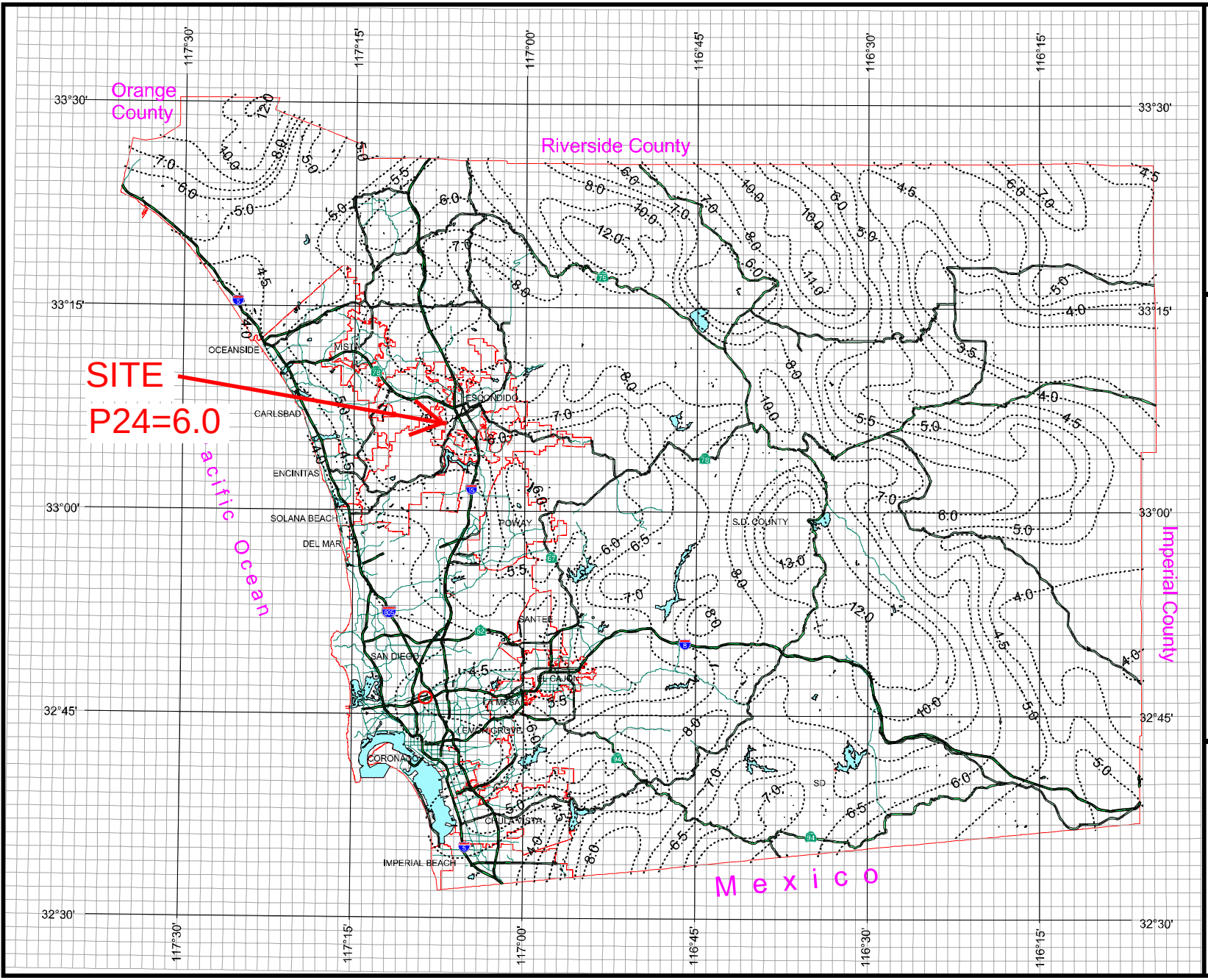

County of San Diego Hydrology Manual

Rainfall Isopluvials

100 Year Rainfall Event - 24 Hours

Isopluvial (inches)

DPW GIS
Department of Public Works
Geographic Information Services

SanGIS
We Have San Diego Covered!

N
W E
S

3 0 3 Miles

THIS MAP IS PROVIDED WITHOUT WARRANTY OF ANY KIND, EITHER EXPRESS OR IMPLIED, INCLUDING, BUT NOT LIMITED TO, THE IMPLIED WARRANTIES OF MERCHANTABILITY AND FITNESS FOR A PARTICULAR PURPOSE. Copyright SanGIS. All Rights Reserved.

This products may contain information from the SANDAG Regional Information System which cannot be reproduced without the written permission of SANDAG.

This product may contain information which has been reproduced with permission granted by Thomas Brothers Maps.

Table 3-1
RUNOFF COEFFICIENTS FOR URBAN AREAS

Land Use		Runoff Coefficient "C"				
			Soil Type			
NRCS Elements	County Elements	% IMPER.	A	B	C	D
Undisturbed Natural Terrain (Natural)	Permanent Open Space	0*	0.20	0.25	0.30	0.35
Low Density Residential (LDR)	Residential, 1.0 DU/A or less	10	0.27	0.32	0.36	0.41
Low Density Residential (LDR)	Residential, 2.0 DU/A or less	20	0.34	0.38	0.42	0.46
Low Density Residential (LDR)	Residential, 2.9 DU/A or less	25	0.38	0.41	0.45	0.49
Medium Density Residential (MDR)	Residential, 4.3 DU/A or less	30	0.41	0.45	0.48	0.52
Medium Density Residential (MDR)	Residential, 7.3 DU/A or less	40	0.48	0.51	0.54	0.57
Medium Density Residential (MDR)	Residential, 10.9 DU/A or less	45	0.52	0.54	0.57	0.60
Medium Density Residential (MDR)	Residential, 14.5 DU/A or less	50	0.55	0.58	0.60	0.63
High Density Residential (HDR)	Residential, 24.0 DU/A or less	65	0.66	0.67	0.69	0.71
High Density Residential (HDR)	Residential, 43.0 DU/A or less	80	0.76	0.77	0.78	0.79
Commercial/Industrial (N. Com)	Neighborhood Commercial	80	0.76	0.77	0.78	0.79
Commercial/Industrial (G. Com)	General Commercial	85	0.80	0.80	0.81	0.82
Commercial/Industrial (O.P. Com)	Office Professional/Commercial	90	0.83	0.84	0.84	0.85
Commercial/Industrial (Limited I.)	Limited Industrial	90	0.83	0.84	0.84	0.85
Commercial/Industrial (General I.)	General Industrial	95	0.87	0.87	0.87	0.87

*The values associated with 0% impervious may be used for direct calculation of the runoff coefficient as described in Section 3.1.2 (representing the pervious runoff coefficient, Cp, for the soil type), or for areas that will remain undisturbed in perpetuity. Justification must be given that the area will remain natural forever (e.g., the area is located in Cleveland National Forest).
DU/A = dwelling units per acre
NRCS = National Resources Conservation Service

Appendix D

AES Analysis
Existing Conditions Coding Summary
Existing Conditions AES Output
Proposed Conditions Coding Summary
Proposed Conditions AES Output

BASIN A

FUSCOE ENGINEERING
6390 Greenwich Drive, Suite 170
San Diego, California 92122
tel 858.554.1500 • fax 858.597.0335
www.fuscoe.com

Job Name: Eden Hills
Existing Hydrology
100 year Design Storm
Job #: 2690-007-02

Date: Aug 2013
EDEN100.DAT
Run Name: 100 Series

Page: 1

Node to Node		Code	Elev 1 (feet)	Elev 2 (feet)	Length (feet)	C or Fric Co.	Area (ac.)	Comments
100	101	2	1015.0	1000.0	107.61	0.35	0.10	
101	102	5	1000.0	950.0	307.50	0.35	1.35	Mtn. Channel
102	103	5	950.0	863.0	386.75	0.350	2.280	
103	104	5	863.0	832.0	199.49	0.35	0.43	
104	104	1	-	-	-	-	-	1 of 3
105	106	2	975.0	967.0	98.40	0.350	0.10	
106	107	5	967.0	918.0	218.70	0.35	0.92	
107	104	5	918.0	832.0	384.60	0.35	1.58	
104	104	1	-	-	-	-	-	2 of 3
108	109	2	900.0	896.0	75.00	0.35	0.10	
109	104	5	896.0	832.0	333.40	0.35	1.37	
104	104	1	-	-	-	-	-	3 of 3
104	110	5	832.0	816.0	151.10	0.35	0.89	
110	111	5	816.0	786.0	372.90	0.35	2.58	
111	111	1	-	-	-	-	-	1 of 2
112	113	2	975.0	950.0	128.40	0.350	0.11	
113	114	5	950.0	875.0	395.10	0.35	1.25	
114	111	5	875.0	786.0	668.60	0.35	2.75	
111	111		-	-	-	-	-	2 of 2
111	115	5	786.0	775.0	254.80	0.35	0.86	
115	115	1	-	-	-	-	-	1 of 2
116	117	2	880.0	852.0	103.20	0.35	0.10	
117	115	5	852.0	775.0	665.80	0.35	2.29	
115	115	1	-	-	-	-	-	2 of 2
115	115	10	-	-	-	-	-	Save to Bank 1
118	119	2	902.0	899.0	75.00	0.35	0.11	
119	120	5	899.0	805.0	497.10	0.35	1.49	
120	120	1	-	-	-	-	-	1 of 3
121	122	2	869.0	866.0	81.00	0.35	0.11	
122	120	5	866.0	805.0	459.00	0.35	1.70	
120	120	1	-	-	-	-	-	2 of 3

FUSCOE
ENGINEERING
6390 Greenwich Drive, Suite 170
San Diego, California 92122
tel 858.554.1500 • fax 858.597.0335
www.fuscoe.com

Job Name: Eden Hills
Existing Hydrology
100 year Design Storm
Job #: 2690-007-02

Date: Aug 2013
Run Name: 100 Series
Page: 2

Node to Node		Code	Elev 1 (feet)	Elev 2 (feet)	Length (feet)	C or Fric Co.	Area (ac.)	Comments
123	124	2	847.0	831.0	86.70	0.35	0.10	
124	120	5	831.0	805.0	274.80	0.350	0.51	
120	120	1	-	-	-	-	-	3 of 3
120	125	5	805.0	786.0	260.20	0.35	0.37	
125	125	1	-	-	-	-	-	1 of 2
118	126	2	902.0	900.0	75.00	0.35	0.10	
126	127	5	900.0	803.0	468.90	0.35	1.83	
127	125	5	803.0	786.0	187.00	0.35	0.40	
125	125	1	-	-	-	-	-	2 of 2
125	128	5	786.0	780.0	94.70	0.35	0.08	
128	128	1	-	-	-	-	-	1 of 2
129	130	2	814.0	807.0	106.00	0.350	0.10	
130	128	5	807.0	780.0	337.30	0.350	0.40	
128	128	1	-	-	-	-	-	2 of 2
128	115	5	780.0	775.0	151.00	0.35	0.42	
115	115	11						Confl. w/ Bank 1

```
****************************************************************************

            RATIONAL METHOD HYDROLOGY COMPUTER PROGRAM PACKAGE
            Reference: SAN DIEGO COUNTY FLOOD CONTROL DISTRICT
                         2003,1985,1981 HYDROLOGY MANUAL
         (c) Copyright 1982-2012 Advanced Engineering Software (aes)
             Ver. 19.0 Release Date: 06/01/2012  License ID 1355

                           Analysis prepared by:

                             Fuscoe Engineering
                             6390 Greenwich Dr.
                                 Suite 170
                            San Diego, CA 92122

 ************************** DESCRIPTION OF STUDY **************************
* EDEN HILLS                                                               *
* EXISTING HYDROLOGY STUDY - 100 SERIES                                    *
* OCTOBER 20, 2014                                                         *
 ***************************************************************************

  FILE NAME: EDEN100.DAT
  TIME/DATE OF STUDY: 10:06 10/20/2014
----------------------------------------------------------------------------
  USER SPECIFIED HYDROLOGY AND HYDRAULIC MODEL INFORMATION:
----------------------------------------------------------------------------
  2003 SAN DIEGO MANUAL CRITERIA

  USER SPECIFIED STORM EVENT(YEAR) = 100.00
  6-HOUR DURATION PRECIPITATION (INCHES) =   3.200
  SPECIFIED MINIMUM PIPE SIZE(INCH) =  12.00
  SPECIFIED PERCENT OF GRADIENTS(DECIMAL) TO USE FOR FRICTION SLOPE = 0.90
  SPECIFIED CONSTANT RUNOFF COEFFICIENT = 0.350
  NOTE: USE MODIFIED RATIONAL METHOD PROCEDURES FOR CONFLUENCE ANALYSIS
  *USER-DEFINED STREET-SECTIONS FOR COUPLED PIPEFLOW AND STREETFLOW MODEL*
     HALF-  CROWN TO   STREET-CROSSFALL:   CURB  GUTTER-GEOMETRIES:  MANNING
     WIDTH  CROSSFALL  IN-  / OUT-/PARK-  HEIGHT  WIDTH  LIP   HIKE  FACTOR
NO.   (FT)     (FT)    SIDE / SIDE/ WAY    (FT)    (FT)  (FT)  (FT)    (n)
===  =====  =========  =================  ======  ===== ====== ===== =======
  1   30.0     20.0    0.018/0.018/0.020   0.67    2.00 0.0313 0.167 0.0150

  GLOBAL STREET FLOW-DEPTH CONSTRAINTS:
    1. Relative Flow-Depth =  0.00 FEET
       as (Maximum Allowable Street Flow Depth) - (Top-of-Curb)
    2. (Depth)*(Velocity) Constraint =  6.0 (FT*FT/S)
  *SIZE PIPE WITH A FLOW CAPACITY GREATER THAN
   OR EQUAL TO THE UPSTREAM TRIBUTARY PIPE.*

****************************************************************************
  FLOW PROCESS FROM NODE    100.00 TO NODE    101.00 IS CODE =  21
----------------------------------------------------------------------------
  >>>>>RATIONAL METHOD INITIAL SUBAREA ANALYSIS<<<<<
============================================================================
  *USER SPECIFIED(GLOBAL):
  NATURAL DESERT LANDSCAPING RUNOFF COEFFICIENT = .3500
  S.C.S. CURVE NUMBER (AMC II) =  85
  INITIAL SUBAREA FLOW-LENGTH(FEET) =   107.61
  UPSTREAM ELEVATION(FEET) =   1015.00
  DOWNSTREAM ELEVATION(FEET) =   1000.00
  ELEVATION DIFFERENCE(FEET) =     15.00
  SUBAREA OVERLAND TIME OF FLOW(MIN.) =    6.267
  WARNING: INITIAL SUBAREA FLOW PATH LENGTH IS GREATER THAN
```

```
          THE MAXIMUM OVERLAND FLOW LENGTH =   100.00
          (Reference: Table 3-1B of Hydrology Manual)
          THE MAXIMUM OVERLAND FLOW LENGTH IS USED IN Tc CALCULATION!
   100 YEAR RAINFALL INTENSITY(INCH/HOUR) =  7.288
  SUBAREA RUNOFF(CFS) =      0.26
  TOTAL AREA(ACRES) =      0.10   TOTAL RUNOFF(CFS) =      0.26

****************************************************************************
  FLOW PROCESS FROM NODE    101.00 TO NODE    102.00 IS CODE =  51
----------------------------------------------------------------------------
  >>>>>COMPUTE TRAPEZOIDAL CHANNEL FLOW<<<<<
  >>>>>TRAVELTIME THRU SUBAREA (EXISTING ELEMENT)<<<<<
============================================================================
  ELEVATION DATA: UPSTREAM(FEET) =   1000.00  DOWNSTREAM(FEET) =    950.00
  CHANNEL LENGTH THRU SUBAREA(FEET) =   307.50   CHANNEL SLOPE =  0.1626
  CHANNEL BASE(FEET) =    3.00   "Z" FACTOR =   2.000
  MANNING'S FACTOR = 0.030   MAXIMUM DEPTH(FEET) =  10.00
   100 YEAR RAINFALL INTENSITY(INCH/HOUR) =  6.571
  *USER SPECIFIED(GLOBAL):
  NATURAL DESERT LANDSCAPING RUNOFF COEFFICIENT = .3500
  S.C.S. CURVE NUMBER (AMC II) =  85
  TRAVEL TIME COMPUTED USING ESTIMATED FLOW(CFS) =       1.81
  TRAVEL TIME THRU SUBAREA BASED ON VELOCITY(FEET/SEC.) =   4.69
  AVERAGE FLOW DEPTH(FEET) =   0.12   TRAVEL TIME(MIN.) =   1.09
  Tc(MIN.) =    7.36
  SUBAREA AREA(ACRES) =     1.35       SUBAREA RUNOFF(CFS) =    3.10
  AREA-AVERAGE RUNOFF COEFFICIENT =  0.350
  TOTAL AREA(ACRES) =        1.5         PEAK FLOW RATE(CFS) =       3.33

  END OF SUBAREA CHANNEL FLOW HYDRAULICS:
  DEPTH(FEET) =  0.17   FLOW VELOCITY(FEET/SEC.) =   5.77
  LONGEST FLOWPATH FROM NODE    100.00 TO NODE    102.00 =     415.11 FEET.

****************************************************************************
  FLOW PROCESS FROM NODE    102.00 TO NODE    103.00 IS CODE =  51
----------------------------------------------------------------------------
  >>>>>COMPUTE TRAPEZOIDAL CHANNEL FLOW<<<<<
  >>>>>TRAVELTIME THRU SUBAREA (EXISTING ELEMENT)<<<<<
============================================================================
  ELEVATION DATA: UPSTREAM(FEET) =    950.00  DOWNSTREAM(FEET) =    863.00
  CHANNEL LENGTH THRU SUBAREA(FEET) =   386.75   CHANNEL SLOPE =  0.2250
  CHANNEL BASE(FEET) =    3.00   "Z" FACTOR =   2.000
  MANNING'S FACTOR = 0.030   MAXIMUM DEPTH(FEET) =  10.00
   100 YEAR RAINFALL INTENSITY(INCH/HOUR) =  6.130
  *USER SPECIFIED(GLOBAL):
  NATURAL DESERT LANDSCAPING RUNOFF COEFFICIENT = .3500
  S.C.S. CURVE NUMBER (AMC II) =  85
  TRAVEL TIME COMPUTED USING ESTIMATED FLOW(CFS) =       5.78
  TRAVEL TIME THRU SUBAREA BASED ON VELOCITY(FEET/SEC.) =   7.70
  AVERAGE FLOW DEPTH(FEET) =   0.22   TRAVEL TIME(MIN.) =   0.84
  Tc(MIN.) =    8.20
  SUBAREA AREA(ACRES) =     2.28       SUBAREA RUNOFF(CFS) =    4.89
  AREA-AVERAGE RUNOFF COEFFICIENT =  0.350
  TOTAL AREA(ACRES) =        3.7         PEAK FLOW RATE(CFS) =       8.00

  END OF SUBAREA CHANNEL FLOW HYDRAULICS:
  DEPTH(FEET) =  0.26   FLOW VELOCITY(FEET/SEC.) =   8.59
  LONGEST FLOWPATH FROM NODE    100.00 TO NODE    103.00 =     801.86 FEET.

****************************************************************************
  FLOW PROCESS FROM NODE    103.00 TO NODE    104.00 IS CODE =  51
----------------------------------------------------------------------------
  >>>>>COMPUTE TRAPEZOIDAL CHANNEL FLOW<<<<<
```

```
  >>>>>TRAVELTIME THRU SUBAREA (EXISTING ELEMENT)<<<<<
================================================================================
  ELEVATION DATA: UPSTREAM(FEET) =    863.00  DOWNSTREAM(FEET) =    832.00
  CHANNEL LENGTH THRU SUBAREA(FEET) =   199.49   CHANNEL SLOPE =  0.1554
  CHANNEL BASE(FEET) =    3.00   "Z" FACTOR =   2.000
  MANNING'S FACTOR = 0.030   MAXIMUM DEPTH(FEET) =  10.00
   100 YEAR RAINFALL INTENSITY(INCH/HOUR) =  5.931
  *USER SPECIFIED(GLOBAL):
  NATURAL DESERT LANDSCAPING RUNOFF COEFFICIENT = .3500
  S.C.S. CURVE NUMBER (AMC II) =  85
  TRAVEL TIME COMPUTED USING ESTIMATED FLOW(CFS) =       8.45
  TRAVEL TIME THRU SUBAREA BASED ON VELOCITY(FEET/SEC.) =   7.75
  AVERAGE FLOW DEPTH(FEET) =   0.30   TRAVEL TIME(MIN.) =   0.43
  Tc(MIN.) =    8.63
  SUBAREA AREA(ACRES) =     0.43       SUBAREA RUNOFF(CFS) =    0.89
  AREA-AVERAGE RUNOFF COEFFICIENT =  0.350
  TOTAL AREA(ACRES) =        4.2         PEAK FLOW RATE(CFS) =       8.64

  END OF SUBAREA CHANNEL FLOW HYDRAULICS:
  DEPTH(FEET) =  0.31   FLOW VELOCITY(FEET/SEC.) =   7.75
  LONGEST FLOWPATH FROM NODE    100.00 TO NODE    104.00 =    1001.35 FEET.

****************************************************************************
  FLOW PROCESS FROM NODE    104.00 TO NODE    104.00 IS CODE =   1
----------------------------------------------------------------------------
  >>>>>DESIGNATE INDEPENDENT STREAM FOR CONFLUENCE<<<<<
================================================================================
  TOTAL NUMBER OF STREAMS =  3
  CONFLUENCE VALUES USED FOR INDEPENDENT STREAM  1 ARE:
  TIME OF CONCENTRATION(MIN.) =    8.63
  RAINFALL INTENSITY(INCH/HR) =   5.93
  TOTAL STREAM AREA(ACRES) =     4.16
  PEAK FLOW RATE(CFS) AT CONFLUENCE =      8.64

****************************************************************************
  FLOW PROCESS FROM NODE    105.00 TO NODE    106.00 IS CODE =  21
----------------------------------------------------------------------------
  >>>>>RATIONAL METHOD INITIAL SUBAREA ANALYSIS<<<<<
================================================================================
  *USER SPECIFIED(GLOBAL):
  NATURAL DESERT LANDSCAPING RUNOFF COEFFICIENT = .3500
  S.C.S. CURVE NUMBER (AMC II) =  85
  INITIAL SUBAREA FLOW-LENGTH(FEET) =    98.40
  UPSTREAM ELEVATION(FEET) =    975.00
  DOWNSTREAM ELEVATION(FEET) =    967.00
  ELEVATION DIFFERENCE(FEET) =      8.00
  SUBAREA OVERLAND TIME OF FLOW(MIN.) =    6.660
   100 YEAR RAINFALL INTENSITY(INCH/HOUR) =  7.008
  SUBAREA RUNOFF(CFS) =      0.25
  TOTAL AREA(ACRES) =      0.10   TOTAL RUNOFF(CFS) =      0.25

****************************************************************************
  FLOW PROCESS FROM NODE    106.00 TO NODE    107.00 IS CODE =  51
----------------------------------------------------------------------------
  >>>>>COMPUTE TRAPEZOIDAL CHANNEL FLOW<<<<<
  >>>>>TRAVELTIME THRU SUBAREA (EXISTING ELEMENT)<<<<<
================================================================================
  ELEVATION DATA: UPSTREAM(FEET) =    967.00  DOWNSTREAM(FEET) =    918.00
  CHANNEL LENGTH THRU SUBAREA(FEET) =   218.70   CHANNEL SLOPE =  0.2241
  CHANNEL BASE(FEET) =    3.00   "Z" FACTOR =   2.000
  MANNING'S FACTOR = 0.030   MAXIMUM DEPTH(FEET) =  10.00
   100 YEAR RAINFALL INTENSITY(INCH/HOUR) =  6.517
  *USER SPECIFIED(GLOBAL):
```

```
  NATURAL DESERT LANDSCAPING RUNOFF COEFFICIENT = .3500
  S.C.S. CURVE NUMBER (AMC II) =  85
  TRAVEL TIME COMPUTED USING ESTIMATED FLOW(CFS) =       1.29
  TRAVEL TIME THRU SUBAREA BASED ON VELOCITY(FEET/SEC.) =   4.59
  AVERAGE FLOW DEPTH(FEET) =   0.09   TRAVEL TIME(MIN.) =   0.79
  Tc(MIN.) =    7.45
  SUBAREA AREA(ACRES) =     0.92       SUBAREA RUNOFF(CFS) =    2.10
  AREA-AVERAGE RUNOFF COEFFICIENT =  0.350
  TOTAL AREA(ACRES) =        1.0         PEAK FLOW RATE(CFS) =       2.33

  END OF SUBAREA CHANNEL FLOW HYDRAULICS:
  DEPTH(FEET) =  0.13   FLOW VELOCITY(FEET/SEC.) =   5.64
  LONGEST FLOWPATH FROM NODE    105.00 TO NODE    107.00 =     317.10 FEET.

****************************************************************************
  FLOW PROCESS FROM NODE    107.00 TO NODE    104.00 IS CODE =  51
----------------------------------------------------------------------------
  >>>>>COMPUTE TRAPEZOIDAL CHANNEL FLOW<<<<<
  >>>>>TRAVELTIME THRU SUBAREA (EXISTING ELEMENT)<<<<<
============================================================================
  ELEVATION DATA: UPSTREAM(FEET) =    918.00  DOWNSTREAM(FEET) =    832.00
  CHANNEL LENGTH THRU SUBAREA(FEET) =   384.60   CHANNEL SLOPE =  0.2236
  CHANNEL BASE(FEET) =    3.00   "Z" FACTOR =   2.000
  MANNING'S FACTOR = 0.030   MAXIMUM DEPTH(FEET) =  10.00
   100 YEAR RAINFALL INTENSITY(INCH/HOUR) =  6.027
  *USER SPECIFIED(GLOBAL):
  NATURAL DESERT LANDSCAPING RUNOFF COEFFICIENT = .3500
  S.C.S. CURVE NUMBER (AMC II) =  85
  TRAVEL TIME COMPUTED USING ESTIMATED FLOW(CFS) =       4.00
  TRAVEL TIME THRU SUBAREA BASED ON VELOCITY(FEET/SEC.) =   6.68
  AVERAGE FLOW DEPTH(FEET) =   0.18   TRAVEL TIME(MIN.) =   0.96
  Tc(MIN.) =    8.41
  SUBAREA AREA(ACRES) =     1.58       SUBAREA RUNOFF(CFS) =    3.33
  AREA-AVERAGE RUNOFF COEFFICIENT =  0.350
  TOTAL AREA(ACRES) =        2.6         PEAK FLOW RATE(CFS) =       5.48

  END OF SUBAREA CHANNEL FLOW HYDRAULICS:
  DEPTH(FEET) =  0.21   FLOW VELOCITY(FEET/SEC.) =   7.61
  LONGEST FLOWPATH FROM NODE    105.00 TO NODE    104.00 =     701.70 FEET.

****************************************************************************
  FLOW PROCESS FROM NODE    104.00 TO NODE    104.00 IS CODE =   1
----------------------------------------------------------------------------
  >>>>>DESIGNATE INDEPENDENT STREAM FOR CONFLUENCE<<<<<
============================================================================
  TOTAL NUMBER OF STREAMS =  3
  CONFLUENCE VALUES USED FOR INDEPENDENT STREAM  2 ARE:
  TIME OF CONCENTRATION(MIN.) =    8.41
  RAINFALL INTENSITY(INCH/HR) =   6.03
  TOTAL STREAM AREA(ACRES) =     2.60
  PEAK FLOW RATE(CFS) AT CONFLUENCE =      5.48

****************************************************************************
  FLOW PROCESS FROM NODE    108.00 TO NODE    109.00 IS CODE =  21
----------------------------------------------------------------------------
  >>>>>RATIONAL METHOD INITIAL SUBAREA ANALYSIS<<<<<
============================================================================
  *USER SPECIFIED(GLOBAL):
  NATURAL DESERT LANDSCAPING RUNOFF COEFFICIENT = .3500
  S.C.S. CURVE NUMBER (AMC II) =  85
  INITIAL SUBAREA FLOW-LENGTH(FEET) =    75.00
  UPSTREAM ELEVATION(FEET) =    900.00
  DOWNSTREAM ELEVATION(FEET) =    896.00
```

```
  ELEVATION DIFFERENCE(FEET) =      4.00
  SUBAREA OVERLAND TIME OF FLOW(MIN.) =    6.692
   100 YEAR RAINFALL INTENSITY(INCH/HOUR) =  6.986
  SUBAREA RUNOFF(CFS) =      0.24
  TOTAL AREA(ACRES) =      0.10   TOTAL RUNOFF(CFS) =      0.24

****************************************************************************
  FLOW PROCESS FROM NODE    109.00 TO NODE    104.00 IS CODE =  51
----------------------------------------------------------------------------
  >>>>>COMPUTE TRAPEZOIDAL CHANNEL FLOW<<<<<
  >>>>>TRAVELTIME THRU SUBAREA (EXISTING ELEMENT)<<<<<
============================================================================
  ELEVATION DATA: UPSTREAM(FEET) =    896.00  DOWNSTREAM(FEET) =    832.00
  CHANNEL LENGTH THRU SUBAREA(FEET) =   333.40   CHANNEL SLOPE =  0.1920
  CHANNEL BASE(FEET) =    3.00   "Z" FACTOR =   2.000
  MANNING'S FACTOR = 0.030   MAXIMUM DEPTH(FEET) =  10.00
   100 YEAR RAINFALL INTENSITY(INCH/HOUR) =  6.315
  *USER SPECIFIED(GLOBAL):
  NATURAL DESERT LANDSCAPING RUNOFF COEFFICIENT = .3500
  S.C.S. CURVE NUMBER (AMC II) =  85
  TRAVEL TIME COMPUTED USING ESTIMATED FLOW(CFS) =       1.76
  TRAVEL TIME THRU SUBAREA BASED ON VELOCITY(FEET/SEC.) =   4.90
  AVERAGE FLOW DEPTH(FEET) =   0.11   TRAVEL TIME(MIN.) =   1.14
  Tc(MIN.) =    7.83
  SUBAREA AREA(ACRES) =     1.37       SUBAREA RUNOFF(CFS) =    3.03
  AREA-AVERAGE RUNOFF COEFFICIENT =  0.350
  TOTAL AREA(ACRES) =        1.5         PEAK FLOW RATE(CFS) =       3.25

  END OF SUBAREA CHANNEL FLOW HYDRAULICS:
  DEPTH(FEET) =  0.16   FLOW VELOCITY(FEET/SEC.) =   5.99
  LONGEST FLOWPATH FROM NODE    108.00 TO NODE    104.00 =     408.40 FEET.

****************************************************************************
  FLOW PROCESS FROM NODE    104.00 TO NODE    104.00 IS CODE =   1
----------------------------------------------------------------------------
  >>>>>DESIGNATE INDEPENDENT STREAM FOR CONFLUENCE<<<<<
  >>>>>AND COMPUTE VARIOUS CONFLUENCED STREAM VALUES<<<<<
============================================================================
  TOTAL NUMBER OF STREAMS =  3
  CONFLUENCE VALUES USED FOR INDEPENDENT STREAM  3 ARE:
  TIME OF CONCENTRATION(MIN.) =    7.83
  RAINFALL INTENSITY(INCH/HR) =   6.31
  TOTAL STREAM AREA(ACRES) =     1.47
  PEAK FLOW RATE(CFS) AT CONFLUENCE =      3.25

  ** CONFLUENCE DATA **
  STREAM     RUNOFF       Tc      INTENSITY      AREA
  NUMBER      (CFS)     (MIN.)   (INCH/HOUR)    (ACRE)
      1        8.64     8.63        5.931          4.16
      2        5.48     8.41        6.027          2.60
      3        3.25     7.83        6.315          1.47

  RAINFALL INTENSITY AND TIME OF CONCENTRATION RATIO
  CONFLUENCE FORMULA USED FOR  3 STREAMS.

  ** PEAK FLOW RATE TABLE **
  STREAM     RUNOFF      Tc      INTENSITY
  NUMBER      (CFS)    (MIN.)   (INCH/HOUR)
      1       16.19     7.83       6.315
      2       17.01     8.41       6.027
      3       17.09     8.63       5.931

  COMPUTED CONFLUENCE ESTIMATES ARE AS FOLLOWS:
```

```
  PEAK FLOW RATE(CFS) =      17.09   Tc(MIN.) =    8.63
  TOTAL AREA(ACRES) =        8.2
  LONGEST FLOWPATH FROM NODE    100.00 TO NODE    104.00 =    1001.35 FEET.

****************************************************************************
  FLOW PROCESS FROM NODE    104.00 TO NODE    110.00 IS CODE =  51
----------------------------------------------------------------------------
  >>>>>COMPUTE TRAPEZOIDAL CHANNEL FLOW<<<<<
  >>>>>TRAVELTIME THRU SUBAREA (EXISTING ELEMENT)<<<<<
============================================================================
  ELEVATION DATA: UPSTREAM(FEET) =    832.00  DOWNSTREAM(FEET) =    816.00
  CHANNEL LENGTH THRU SUBAREA(FEET) =   151.10   CHANNEL SLOPE =  0.1059
  CHANNEL BASE(FEET) =    3.00   "Z" FACTOR =   2.000
  MANNING'S FACTOR = 0.030   MAXIMUM DEPTH(FEET) =  10.00
   100 YEAR RAINFALL INTENSITY(INCH/HOUR) =  5.806
  *USER SPECIFIED(GLOBAL):
  NATURAL DESERT LANDSCAPING RUNOFF COEFFICIENT = .3500
  S.C.S. CURVE NUMBER (AMC II) =  85
  TRAVEL TIME COMPUTED USING ESTIMATED FLOW(CFS) =      17.99
  TRAVEL TIME THRU SUBAREA BASED ON VELOCITY(FEET/SEC.) =   8.65
  AVERAGE FLOW DEPTH(FEET) =   0.52   TRAVEL TIME(MIN.) =   0.29
  Tc(MIN.) =    8.92
  SUBAREA AREA(ACRES) =     0.89       SUBAREA RUNOFF(CFS) =    1.81
  AREA-AVERAGE RUNOFF COEFFICIENT =  0.350
  TOTAL AREA(ACRES) =        9.1         PEAK FLOW RATE(CFS) =      18.53

  END OF SUBAREA CHANNEL FLOW HYDRAULICS:
  DEPTH(FEET) =  0.52   FLOW VELOCITY(FEET/SEC.) =   8.75
  LONGEST FLOWPATH FROM NODE    100.00 TO NODE    110.00 =    1152.45 FEET.

****************************************************************************
  FLOW PROCESS FROM NODE    110.00 TO NODE    111.00 IS CODE =  51
----------------------------------------------------------------------------
  >>>>>COMPUTE TRAPEZOIDAL CHANNEL FLOW<<<<<
  >>>>>TRAVELTIME THRU SUBAREA (EXISTING ELEMENT)<<<<<
============================================================================
  ELEVATION DATA: UPSTREAM(FEET) =    816.00  DOWNSTREAM(FEET) =    786.00
  CHANNEL LENGTH THRU SUBAREA(FEET) =   372.90   CHANNEL SLOPE =  0.0805
  CHANNEL BASE(FEET) =    3.00   "Z" FACTOR =   2.000
  MANNING'S FACTOR = 0.030   MAXIMUM DEPTH(FEET) =  10.00
   100 YEAR RAINFALL INTENSITY(INCH/HOUR) =  5.508
  *USER SPECIFIED(GLOBAL):
  NATURAL DESERT LANDSCAPING RUNOFF COEFFICIENT = .3500
  S.C.S. CURVE NUMBER (AMC II) =  85
  TRAVEL TIME COMPUTED USING ESTIMATED FLOW(CFS) =      21.02
  TRAVEL TIME THRU SUBAREA BASED ON VELOCITY(FEET/SEC.) =   8.21
  AVERAGE FLOW DEPTH(FEET) =   0.61   TRAVEL TIME(MIN.) =   0.76
  Tc(MIN.) =    9.67
  SUBAREA AREA(ACRES) =     2.58       SUBAREA RUNOFF(CFS) =    4.97
  AREA-AVERAGE RUNOFF COEFFICIENT =  0.350
  TOTAL AREA(ACRES) =       11.7         PEAK FLOW RATE(CFS) =      22.56

  END OF SUBAREA CHANNEL FLOW HYDRAULICS:
  DEPTH(FEET) =  0.63   FLOW VELOCITY(FEET/SEC.) =   8.40
  LONGEST FLOWPATH FROM NODE    100.00 TO NODE    111.00 =    1525.35 FEET.

****************************************************************************
  FLOW PROCESS FROM NODE    111.00 TO NODE    111.00 IS CODE =   1
----------------------------------------------------------------------------
  >>>>>DESIGNATE INDEPENDENT STREAM FOR CONFLUENCE<<<<<
============================================================================
  TOTAL NUMBER OF STREAMS =  2
  CONFLUENCE VALUES USED FOR INDEPENDENT STREAM  1 ARE:
```

```
  TIME OF CONCENTRATION(MIN.) =    9.67
  RAINFALL INTENSITY(INCH/HR) =   5.51
  TOTAL STREAM AREA(ACRES) =    11.70
  PEAK FLOW RATE(CFS) AT CONFLUENCE =     22.56

****************************************************************************
  FLOW PROCESS FROM NODE    112.00 TO NODE    113.00 IS CODE =  21
----------------------------------------------------------------------------
  >>>>>RATIONAL METHOD INITIAL SUBAREA ANALYSIS<<<<<
============================================================================
  *USER SPECIFIED(GLOBAL):
  NATURAL DESERT LANDSCAPING RUNOFF COEFFICIENT = .3500
  S.C.S. CURVE NUMBER (AMC II) =  85
  INITIAL SUBAREA FLOW-LENGTH(FEET) =   128.40
  UPSTREAM ELEVATION(FEET) =    975.00
  DOWNSTREAM ELEVATION(FEET) =    950.00
  ELEVATION DIFFERENCE(FEET) =     25.00
  SUBAREA OVERLAND TIME OF FLOW(MIN.) =    6.267
  WARNING: INITIAL SUBAREA FLOW PATH LENGTH IS GREATER THAN
           THE MAXIMUM OVERLAND FLOW LENGTH =   100.00
           (Reference: Table 3-1B of Hydrology Manual)
           THE MAXIMUM OVERLAND FLOW LENGTH IS USED IN Tc CALCULATION!
   100 YEAR RAINFALL INTENSITY(INCH/HOUR) =  7.288
  SUBAREA RUNOFF(CFS) =      0.28
  TOTAL AREA(ACRES) =      0.11   TOTAL RUNOFF(CFS) =      0.28

****************************************************************************
  FLOW PROCESS FROM NODE    113.00 TO NODE    114.00 IS CODE =  51
----------------------------------------------------------------------------
  >>>>>COMPUTE TRAPEZOIDAL CHANNEL FLOW<<<<<
  >>>>>TRAVELTIME THRU SUBAREA (EXISTING ELEMENT)<<<<<
============================================================================
  ELEVATION DATA: UPSTREAM(FEET) =    950.00  DOWNSTREAM(FEET) =    875.00
  CHANNEL LENGTH THRU SUBAREA(FEET) =   395.10   CHANNEL SLOPE =  0.1898
  CHANNEL BASE(FEET) =    3.00   "Z" FACTOR =   2.000
  MANNING'S FACTOR = 0.030   MAXIMUM DEPTH(FEET) =  10.00
   100 YEAR RAINFALL INTENSITY(INCH/HOUR) =  6.398
  *USER SPECIFIED(GLOBAL):
  NATURAL DESERT LANDSCAPING RUNOFF COEFFICIENT = .3500
  S.C.S. CURVE NUMBER (AMC II) =  85
  TRAVEL TIME COMPUTED USING ESTIMATED FLOW(CFS) =       1.69
  TRAVEL TIME THRU SUBAREA BASED ON VELOCITY(FEET/SEC.) =   4.70
  AVERAGE FLOW DEPTH(FEET) =   0.11   TRAVEL TIME(MIN.) =   1.40
  Tc(MIN.) =    7.67
  SUBAREA AREA(ACRES) =     1.25       SUBAREA RUNOFF(CFS) =    2.80
  AREA-AVERAGE RUNOFF COEFFICIENT =  0.350
  TOTAL AREA(ACRES) =        1.4         PEAK FLOW RATE(CFS) =       3.05

  END OF SUBAREA CHANNEL FLOW HYDRAULICS:
  DEPTH(FEET) =  0.16   FLOW VELOCITY(FEET/SEC.) =   5.84
  LONGEST FLOWPATH FROM NODE    112.00 TO NODE    114.00 =     523.50 FEET.

****************************************************************************
  FLOW PROCESS FROM NODE    114.00 TO NODE    111.00 IS CODE =  51
----------------------------------------------------------------------------
  >>>>>COMPUTE TRAPEZOIDAL CHANNEL FLOW<<<<<
  >>>>>TRAVELTIME THRU SUBAREA (EXISTING ELEMENT)<<<<<
============================================================================
  ELEVATION DATA: UPSTREAM(FEET) =    875.00  DOWNSTREAM(FEET) =    786.00
  CHANNEL LENGTH THRU SUBAREA(FEET) =   668.60   CHANNEL SLOPE =  0.1331
  CHANNEL BASE(FEET) =    3.00   "Z" FACTOR =   2.000
  MANNING'S FACTOR = 0.030   MAXIMUM DEPTH(FEET) =  10.00
   100 YEAR RAINFALL INTENSITY(INCH/HOUR) =  5.611
```

```
  *USER SPECIFIED(GLOBAL):
  NATURAL DESERT LANDSCAPING RUNOFF COEFFICIENT = .3500
  S.C.S. CURVE NUMBER (AMC II) =  85
  TRAVEL TIME COMPUTED USING ESTIMATED FLOW(CFS) =       5.76
  TRAVEL TIME THRU SUBAREA BASED ON VELOCITY(FEET/SEC.) =   6.44
  AVERAGE FLOW DEPTH(FEET) =   0.25   TRAVEL TIME(MIN.) =   1.73
  Tc(MIN.) =    9.40
  SUBAREA AREA(ACRES) =     2.75       SUBAREA RUNOFF(CFS) =    5.40
  AREA-AVERAGE RUNOFF COEFFICIENT =  0.350
  TOTAL AREA(ACRES) =        4.1         PEAK FLOW RATE(CFS) =       8.07

  END OF SUBAREA CHANNEL FLOW HYDRAULICS:
  DEPTH(FEET) =  0.31   FLOW VELOCITY(FEET/SEC.) =   7.25
  LONGEST FLOWPATH FROM NODE    112.00 TO NODE    111.00 =    1192.10 FEET.

****************************************************************************
  FLOW PROCESS FROM NODE    111.00 TO NODE    111.00 IS CODE =   1
----------------------------------------------------------------------------
  >>>>>DESIGNATE INDEPENDENT STREAM FOR CONFLUENCE<<<<<
  >>>>>AND COMPUTE VARIOUS CONFLUENCED STREAM VALUES<<<<<
============================================================================
  TOTAL NUMBER OF STREAMS =  2
  CONFLUENCE VALUES USED FOR INDEPENDENT STREAM  2 ARE:
  TIME OF CONCENTRATION(MIN.) =    9.40
  RAINFALL INTENSITY(INCH/HR) =   5.61
  TOTAL STREAM AREA(ACRES) =     4.11
  PEAK FLOW RATE(CFS) AT CONFLUENCE =      8.07

  ** CONFLUENCE DATA **
  STREAM     RUNOFF       Tc      INTENSITY      AREA
  NUMBER      (CFS)     (MIN.)   (INCH/HOUR)    (ACRE)
      1       22.56     9.67        5.508         11.70
      2        8.07     9.40        5.611          4.11

  RAINFALL INTENSITY AND TIME OF CONCENTRATION RATIO
  CONFLUENCE FORMULA USED FOR  2 STREAMS.

  ** PEAK FLOW RATE TABLE **
  STREAM     RUNOFF      Tc      INTENSITY
  NUMBER      (CFS)    (MIN.)   (INCH/HOUR)
      1       30.21     9.40       5.611
      2       30.48     9.67       5.508

  COMPUTED CONFLUENCE ESTIMATES ARE AS FOLLOWS:
  PEAK FLOW RATE(CFS) =      30.48   Tc(MIN.) =    9.67
  TOTAL AREA(ACRES) =       15.8
  LONGEST FLOWPATH FROM NODE    100.00 TO NODE    111.00 =    1525.35 FEET.

****************************************************************************
  FLOW PROCESS FROM NODE    111.00 TO NODE    115.00 IS CODE =  51
----------------------------------------------------------------------------
  >>>>>COMPUTE TRAPEZOIDAL CHANNEL FLOW<<<<<
  >>>>>TRAVELTIME THRU SUBAREA (EXISTING ELEMENT)<<<<<
============================================================================
  ELEVATION DATA: UPSTREAM(FEET) =    786.00  DOWNSTREAM(FEET) =    775.00
  CHANNEL LENGTH THRU SUBAREA(FEET) =   254.80   CHANNEL SLOPE =  0.0432
  CHANNEL BASE(FEET) =    3.00   "Z" FACTOR =   2.000
  MANNING'S FACTOR = 0.030   MAXIMUM DEPTH(FEET) =  10.00
   100 YEAR RAINFALL INTENSITY(INCH/HOUR) =  5.307
  *USER SPECIFIED(GLOBAL):
  NATURAL DESERT LANDSCAPING RUNOFF COEFFICIENT = .3500
  S.C.S. CURVE NUMBER (AMC II) =  85
  TRAVEL TIME COMPUTED USING ESTIMATED FLOW(CFS) =      31.28
```

```
  TRAVEL TIME THRU SUBAREA BASED ON VELOCITY(FEET/SEC.) =   7.38
  AVERAGE FLOW DEPTH(FEET) =   0.89   TRAVEL TIME(MIN.) =   0.58
  Tc(MIN.) =   10.25
  SUBAREA AREA(ACRES) =     0.86       SUBAREA RUNOFF(CFS) =    1.60
  AREA-AVERAGE RUNOFF COEFFICIENT =  0.350
  TOTAL AREA(ACRES) =       16.7         PEAK FLOW RATE(CFS) =      30.96

  END OF SUBAREA CHANNEL FLOW HYDRAULICS:
  DEPTH(FEET) =  0.88   FLOW VELOCITY(FEET/SEC.) =   7.37
  LONGEST FLOWPATH FROM NODE    100.00 TO NODE    115.00 =    1780.15 FEET.

****************************************************************************
  FLOW PROCESS FROM NODE    115.00 TO NODE    115.00 IS CODE =   1
----------------------------------------------------------------------------
  >>>>>DESIGNATE INDEPENDENT STREAM FOR CONFLUENCE<<<<<
============================================================================
  TOTAL NUMBER OF STREAMS =  2
  CONFLUENCE VALUES USED FOR INDEPENDENT STREAM  1 ARE:
  TIME OF CONCENTRATION(MIN.) =   10.25
  RAINFALL INTENSITY(INCH/HR) =   5.31
  TOTAL STREAM AREA(ACRES) =    16.67
  PEAK FLOW RATE(CFS) AT CONFLUENCE =     30.96

****************************************************************************
  FLOW PROCESS FROM NODE    116.00 TO NODE    117.00 IS CODE =  21
----------------------------------------------------------------------------
  >>>>>RATIONAL METHOD INITIAL SUBAREA ANALYSIS<<<<<
============================================================================
  *USER SPECIFIED(GLOBAL):
  NATURAL DESERT LANDSCAPING RUNOFF COEFFICIENT = .3500
  S.C.S. CURVE NUMBER (AMC II) =  85
  INITIAL SUBAREA FLOW-LENGTH(FEET) =   103.20
  UPSTREAM ELEVATION(FEET) =    880.00
  DOWNSTREAM ELEVATION(FEET) =    852.00
  ELEVATION DIFFERENCE(FEET) =     28.00
  SUBAREA OVERLAND TIME OF FLOW(MIN.) =    6.267
  WARNING: INITIAL SUBAREA FLOW PATH LENGTH IS GREATER THAN
           THE MAXIMUM OVERLAND FLOW LENGTH =   100.00
           (Reference: Table 3-1B of Hydrology Manual)
           THE MAXIMUM OVERLAND FLOW LENGTH IS USED IN Tc CALCULATION!
   100 YEAR RAINFALL INTENSITY(INCH/HOUR) =  7.288
  SUBAREA RUNOFF(CFS) =      0.26
  TOTAL AREA(ACRES) =      0.10   TOTAL RUNOFF(CFS) =      0.26

****************************************************************************
  FLOW PROCESS FROM NODE    117.00 TO NODE    115.00 IS CODE =  51
----------------------------------------------------------------------------
  >>>>>COMPUTE TRAPEZOIDAL CHANNEL FLOW<<<<<
  >>>>>TRAVELTIME THRU SUBAREA (EXISTING ELEMENT)<<<<<
============================================================================
  ELEVATION DATA: UPSTREAM(FEET) =    852.00  DOWNSTREAM(FEET) =    775.00
  CHANNEL LENGTH THRU SUBAREA(FEET) =   665.80   CHANNEL SLOPE =  0.1157
  CHANNEL BASE(FEET) =    3.00   "Z" FACTOR =   2.000
  MANNING'S FACTOR = 0.013   MAXIMUM DEPTH(FEET) =  10.00
   100 YEAR RAINFALL INTENSITY(INCH/HOUR) =  6.414
  *USER SPECIFIED(GLOBAL):
  NATURAL DESERT LANDSCAPING RUNOFF COEFFICIENT = .3500
  S.C.S. CURVE NUMBER (AMC II) =  85
  TRAVEL TIME COMPUTED USING ESTIMATED FLOW(CFS) =       2.85
  TRAVEL TIME THRU SUBAREA BASED ON VELOCITY(FEET/SEC.) =   8.08
  AVERAGE FLOW DEPTH(FEET) =   0.11   TRAVEL TIME(MIN.) =   1.37
  Tc(MIN.) =    7.64
  SUBAREA AREA(ACRES) =     2.29       SUBAREA RUNOFF(CFS) =    5.14
```

```
  AREA-AVERAGE RUNOFF COEFFICIENT =  0.350
  TOTAL AREA(ACRES) =        2.4         PEAK FLOW RATE(CFS) =       5.36

  END OF SUBAREA CHANNEL FLOW HYDRAULICS:
  DEPTH(FEET) =  0.16   FLOW VELOCITY(FEET/SEC.) =  10.42
  LONGEST FLOWPATH FROM NODE    116.00 TO NODE    115.00 =     769.00 FEET.

****************************************************************************
  FLOW PROCESS FROM NODE    115.00 TO NODE    115.00 IS CODE =   1
----------------------------------------------------------------------------
  >>>>>DESIGNATE INDEPENDENT STREAM FOR CONFLUENCE<<<<<
  >>>>>AND COMPUTE VARIOUS CONFLUENCED STREAM VALUES<<<<<
============================================================================
  TOTAL NUMBER OF STREAMS =  2
  CONFLUENCE VALUES USED FOR INDEPENDENT STREAM  2 ARE:
  TIME OF CONCENTRATION(MIN.) =    7.64
  RAINFALL INTENSITY(INCH/HR) =   6.41
  TOTAL STREAM AREA(ACRES) =     2.39
  PEAK FLOW RATE(CFS) AT CONFLUENCE =      5.36

  ** CONFLUENCE DATA **
  STREAM     RUNOFF       Tc      INTENSITY      AREA
  NUMBER      (CFS)     (MIN.)   (INCH/HOUR)    (ACRE)
      1       30.96    10.25        5.307         16.67
      2        5.36     7.64        6.414          2.39

  RAINFALL INTENSITY AND TIME OF CONCENTRATION RATIO
  CONFLUENCE FORMULA USED FOR  2 STREAMS.

  ** PEAK FLOW RATE TABLE **
  STREAM     RUNOFF      Tc      INTENSITY
  NUMBER      (CFS)    (MIN.)   (INCH/HOUR)
      1       30.98     7.64       6.414
      2       35.40    10.25       5.307

  COMPUTED CONFLUENCE ESTIMATES ARE AS FOLLOWS:
  PEAK FLOW RATE(CFS) =      35.40   Tc(MIN.) =   10.25
  TOTAL AREA(ACRES) =       19.1
  LONGEST FLOWPATH FROM NODE    100.00 TO NODE    115.00 =    1780.15 FEET.

****************************************************************************
  FLOW PROCESS FROM NODE    115.00 TO NODE    115.00 IS CODE =  10
----------------------------------------------------------------------------
  >>>>>MAIN-STREAM MEMORY COPIED ONTO MEMORY BANK # 1 <<<<<
============================================================================

****************************************************************************
  FLOW PROCESS FROM NODE    118.00 TO NODE    119.00 IS CODE =  21
----------------------------------------------------------------------------
  >>>>>RATIONAL METHOD INITIAL SUBAREA ANALYSIS<<<<<
============================================================================
  *USER SPECIFIED(GLOBAL):
  NATURAL DESERT LANDSCAPING RUNOFF COEFFICIENT = .3500
  S.C.S. CURVE NUMBER (AMC II) =  85
  INITIAL SUBAREA FLOW-LENGTH(FEET) =    75.00
  UPSTREAM ELEVATION(FEET) =    902.00
  DOWNSTREAM ELEVATION(FEET) =    899.00
  ELEVATION DIFFERENCE(FEET) =      3.00
  SUBAREA OVERLAND TIME OF FLOW(MIN.) =    7.365
   100 YEAR RAINFALL INTENSITY(INCH/HOUR) =  6.567
  SUBAREA RUNOFF(CFS) =      0.25
  TOTAL AREA(ACRES) =      0.11   TOTAL RUNOFF(CFS) =      0.25
```

```
****************************************************************************
  FLOW PROCESS FROM NODE    119.00 TO NODE    120.00 IS CODE =  51
----------------------------------------------------------------------------
  >>>>>COMPUTE TRAPEZOIDAL CHANNEL FLOW<<<<<
  >>>>>TRAVELTIME THRU SUBAREA (EXISTING ELEMENT)<<<<<
============================================================================
  ELEVATION DATA: UPSTREAM(FEET) =    899.00  DOWNSTREAM(FEET) =    805.00
  CHANNEL LENGTH THRU SUBAREA(FEET) =   497.10   CHANNEL SLOPE =  0.1891
  CHANNEL BASE(FEET) =    3.00   "Z" FACTOR =   2.000
  MANNING'S FACTOR = 0.030   MAXIMUM DEPTH(FEET) =  10.00
   100 YEAR RAINFALL INTENSITY(INCH/HOUR) =  5.746
  *USER SPECIFIED(GLOBAL):
  NATURAL DESERT LANDSCAPING RUNOFF COEFFICIENT = .3500
  S.C.S. CURVE NUMBER (AMC II) =  85
  TRAVEL TIME COMPUTED USING ESTIMATED FLOW(CFS) =       1.76
  TRAVEL TIME THRU SUBAREA BASED ON VELOCITY(FEET/SEC.) =   4.89
  AVERAGE FLOW DEPTH(FEET) =   0.11   TRAVEL TIME(MIN.) =   1.69
  Tc(MIN.) =    9.06
  SUBAREA AREA(ACRES) =     1.49       SUBAREA RUNOFF(CFS) =    3.00
  AREA-AVERAGE RUNOFF COEFFICIENT =  0.350
  TOTAL AREA(ACRES) =        1.6         PEAK FLOW RATE(CFS) =       3.22

  END OF SUBAREA CHANNEL FLOW HYDRAULICS:
  DEPTH(FEET) =  0.16   FLOW VELOCITY(FEET/SEC.) =   5.93
  LONGEST FLOWPATH FROM NODE    118.00 TO NODE    120.00 =     572.10 FEET.

****************************************************************************
  FLOW PROCESS FROM NODE    120.00 TO NODE    120.00 IS CODE =   1
----------------------------------------------------------------------------
  >>>>>DESIGNATE INDEPENDENT STREAM FOR CONFLUENCE<<<<<
============================================================================
  TOTAL NUMBER OF STREAMS =  3
  CONFLUENCE VALUES USED FOR INDEPENDENT STREAM  1 ARE:
  TIME OF CONCENTRATION(MIN.) =    9.06
  RAINFALL INTENSITY(INCH/HR) =   5.75
  TOTAL STREAM AREA(ACRES) =     1.60
  PEAK FLOW RATE(CFS) AT CONFLUENCE =      3.22

****************************************************************************
  FLOW PROCESS FROM NODE    121.00 TO NODE    122.00 IS CODE =  21
----------------------------------------------------------------------------
  >>>>>RATIONAL METHOD INITIAL SUBAREA ANALYSIS<<<<<
============================================================================
  *USER SPECIFIED(GLOBAL):
  NATURAL DESERT LANDSCAPING RUNOFF COEFFICIENT = .3500
  S.C.S. CURVE NUMBER (AMC II) =  85
  INITIAL SUBAREA FLOW-LENGTH(FEET) =    81.00
  UPSTREAM ELEVATION(FEET) =    869.00
  DOWNSTREAM ELEVATION(FEET) =    866.00
  ELEVATION DIFFERENCE(FEET) =      3.00
  SUBAREA OVERLAND TIME OF FLOW(MIN.) =    7.853
   100 YEAR RAINFALL INTENSITY(INCH/HOUR) =  6.301
  SUBAREA RUNOFF(CFS) =      0.24
  TOTAL AREA(ACRES) =      0.11   TOTAL RUNOFF(CFS) =      0.24

****************************************************************************
  FLOW PROCESS FROM NODE    122.00 TO NODE    120.00 IS CODE =  51
----------------------------------------------------------------------------
  >>>>>COMPUTE TRAPEZOIDAL CHANNEL FLOW<<<<<
  >>>>>TRAVELTIME THRU SUBAREA (EXISTING ELEMENT)<<<<<
============================================================================
  ELEVATION DATA: UPSTREAM(FEET) =    866.00  DOWNSTREAM(FEET) =    805.00
  CHANNEL LENGTH THRU SUBAREA(FEET) =   459.00   CHANNEL SLOPE =  0.1329
```

```
  CHANNEL BASE(FEET) =    3.00   "Z" FACTOR =   2.000
  MANNING'S FACTOR = 0.030   MAXIMUM DEPTH(FEET) =  10.00
   100 YEAR RAINFALL INTENSITY(INCH/HOUR) =  5.537
  *USER SPECIFIED(GLOBAL):
  NATURAL DESERT LANDSCAPING RUNOFF COEFFICIENT = .3500
  S.C.S. CURVE NUMBER (AMC II) =  85
  TRAVEL TIME COMPUTED USING ESTIMATED FLOW(CFS) =       1.90
  TRAVEL TIME THRU SUBAREA BASED ON VELOCITY(FEET/SEC.) =   4.39
  AVERAGE FLOW DEPTH(FEET) =   0.13   TRAVEL TIME(MIN.) =   1.74
  Tc(MIN.) =    9.60
  SUBAREA AREA(ACRES) =     1.70       SUBAREA RUNOFF(CFS) =    3.29
  AREA-AVERAGE RUNOFF COEFFICIENT =  0.350
  TOTAL AREA(ACRES) =        1.8         PEAK FLOW RATE(CFS) =       3.51

  END OF SUBAREA CHANNEL FLOW HYDRAULICS:
  DEPTH(FEET) =  0.19   FLOW VELOCITY(FEET/SEC.) =   5.53
  LONGEST FLOWPATH FROM NODE    121.00 TO NODE    120.00 =     540.00 FEET.

****************************************************************************
  FLOW PROCESS FROM NODE    120.00 TO NODE    120.00 IS CODE =   1
----------------------------------------------------------------------------
  >>>>>DESIGNATE INDEPENDENT STREAM FOR CONFLUENCE<<<<<
============================================================================
  TOTAL NUMBER OF STREAMS =  3
  CONFLUENCE VALUES USED FOR INDEPENDENT STREAM  2 ARE:
  TIME OF CONCENTRATION(MIN.) =    9.60
  RAINFALL INTENSITY(INCH/HR) =   5.54
  TOTAL STREAM AREA(ACRES) =     1.81
  PEAK FLOW RATE(CFS) AT CONFLUENCE =      3.51

****************************************************************************
  FLOW PROCESS FROM NODE    123.00 TO NODE    124.00 IS CODE =  21
----------------------------------------------------------------------------
  >>>>>RATIONAL METHOD INITIAL SUBAREA ANALYSIS<<<<<
============================================================================
  *USER SPECIFIED(GLOBAL):
  NATURAL DESERT LANDSCAPING RUNOFF COEFFICIENT = .3500
  S.C.S. CURVE NUMBER (AMC II) =  85
  INITIAL SUBAREA FLOW-LENGTH(FEET) =    86.70
  UPSTREAM ELEVATION(FEET) =    847.00
  DOWNSTREAM ELEVATION(FEET) =    831.00
  ELEVATION DIFFERENCE(FEET) =     16.00
  SUBAREA OVERLAND TIME OF FLOW(MIN.) =    5.835
  WARNING: THE MAXIMUM OVERLAND FLOW SLOPE, 10.%, IS USED IN Tc CALCULATION!
   100 YEAR RAINFALL INTENSITY(INCH/HOUR) =  7.632
  SUBAREA RUNOFF(CFS) =      0.27
  TOTAL AREA(ACRES) =      0.10   TOTAL RUNOFF(CFS) =      0.27

****************************************************************************
  FLOW PROCESS FROM NODE    124.00 TO NODE    120.00 IS CODE =  51
----------------------------------------------------------------------------
  >>>>>COMPUTE TRAPEZOIDAL CHANNEL FLOW<<<<<
  >>>>>TRAVELTIME THRU SUBAREA (EXISTING ELEMENT)<<<<<
============================================================================
  ELEVATION DATA: UPSTREAM(FEET) =    831.00  DOWNSTREAM(FEET) =    805.00
  CHANNEL LENGTH THRU SUBAREA(FEET) =   274.80   CHANNEL SLOPE =  0.0946
  CHANNEL BASE(FEET) =    3.00   "Z" FACTOR =   2.000
  MANNING'S FACTOR = 0.030   MAXIMUM DEPTH(FEET) =  10.00
   100 YEAR RAINFALL INTENSITY(INCH/HOUR) =  6.580
  *USER SPECIFIED(GLOBAL):
  NATURAL DESERT LANDSCAPING RUNOFF COEFFICIENT = .3500
  S.C.S. CURVE NUMBER (AMC II) =  85
  TRAVEL TIME COMPUTED USING ESTIMATED FLOW(CFS) =       0.86
```

```
  TRAVEL TIME THRU SUBAREA BASED ON VELOCITY(FEET/SEC.) =   3.04
  AVERAGE FLOW DEPTH(FEET) =   0.09   TRAVEL TIME(MIN.) =   1.51
  Tc(MIN.) =    7.34
  SUBAREA AREA(ACRES) =     0.51       SUBAREA RUNOFF(CFS) =    1.17
  AREA-AVERAGE RUNOFF COEFFICIENT =  0.350
  TOTAL AREA(ACRES) =        0.6         PEAK FLOW RATE(CFS) =       1.40

  END OF SUBAREA CHANNEL FLOW HYDRAULICS:
  DEPTH(FEET) =  0.12   FLOW VELOCITY(FEET/SEC.) =   3.46
  LONGEST FLOWPATH FROM NODE    123.00 TO NODE    120.00 =     361.50 FEET.

****************************************************************************
  FLOW PROCESS FROM NODE    120.00 TO NODE    120.00 IS CODE =   1
----------------------------------------------------------------------------
  >>>>>DESIGNATE INDEPENDENT STREAM FOR CONFLUENCE<<<<<
  >>>>>AND COMPUTE VARIOUS CONFLUENCED STREAM VALUES<<<<<
============================================================================
  TOTAL NUMBER OF STREAMS =  3
  CONFLUENCE VALUES USED FOR INDEPENDENT STREAM  3 ARE:
  TIME OF CONCENTRATION(MIN.) =    7.34
  RAINFALL INTENSITY(INCH/HR) =   6.58
  TOTAL STREAM AREA(ACRES) =     0.61
  PEAK FLOW RATE(CFS) AT CONFLUENCE =      1.40

  ** CONFLUENCE DATA **
  STREAM     RUNOFF       Tc      INTENSITY      AREA
  NUMBER      (CFS)     (MIN.)   (INCH/HOUR)    (ACRE)
      1        3.22     9.06        5.746          1.60
      2        3.51     9.60        5.537          1.81
      3        1.40     7.34        6.580          0.61

  RAINFALL INTENSITY AND TIME OF CONCENTRATION RATIO
  CONFLUENCE FORMULA USED FOR  3 STREAMS.

  ** PEAK FLOW RATE TABLE **
  STREAM     RUNOFF      Tc      INTENSITY
  NUMBER      (CFS)    (MIN.)   (INCH/HOUR)
      1        6.70     7.34       6.580
      2        7.76     9.06       5.746
      3        7.79     9.60       5.537

  COMPUTED CONFLUENCE ESTIMATES ARE AS FOLLOWS:
  PEAK FLOW RATE(CFS) =       7.79   Tc(MIN.) =    9.60
  TOTAL AREA(ACRES) =        4.0
  LONGEST FLOWPATH FROM NODE    118.00 TO NODE    120.00 =     572.10 FEET.

****************************************************************************
  FLOW PROCESS FROM NODE    120.00 TO NODE    125.00 IS CODE =  51
----------------------------------------------------------------------------
  >>>>>COMPUTE TRAPEZOIDAL CHANNEL FLOW<<<<<
  >>>>>TRAVELTIME THRU SUBAREA (EXISTING ELEMENT)<<<<<
============================================================================
  ELEVATION DATA: UPSTREAM(FEET) =    805.00  DOWNSTREAM(FEET) =    786.00
  CHANNEL LENGTH THRU SUBAREA(FEET) =   260.20   CHANNEL SLOPE =  0.0730
  CHANNEL BASE(FEET) =    3.00   "Z" FACTOR =   2.000
  MANNING'S FACTOR = 0.030   MAXIMUM DEPTH(FEET) =  10.00
   100 YEAR RAINFALL INTENSITY(INCH/HOUR) =  5.279
  *USER SPECIFIED(GLOBAL):
  NATURAL DESERT LANDSCAPING RUNOFF COEFFICIENT = .3500
  S.C.S. CURVE NUMBER (AMC II) =  85
  TRAVEL TIME COMPUTED USING ESTIMATED FLOW(CFS) =       8.13
  TRAVEL TIME THRU SUBAREA BASED ON VELOCITY(FEET/SEC.) =   5.89
  AVERAGE FLOW DEPTH(FEET) =   0.37   TRAVEL TIME(MIN.) =   0.74
```

```
  Tc(MIN.) =   10.33
  SUBAREA AREA(ACRES) =     0.37       SUBAREA RUNOFF(CFS) =    0.68
  AREA-AVERAGE RUNOFF COEFFICIENT =  0.350
  TOTAL AREA(ACRES) =        4.4         PEAK FLOW RATE(CFS) =       8.11

  END OF SUBAREA CHANNEL FLOW HYDRAULICS:
  DEPTH(FEET) =  0.37   FLOW VELOCITY(FEET/SEC.) =   5.88
  LONGEST FLOWPATH FROM NODE    118.00 TO NODE    125.00 =     832.30 FEET.

****************************************************************************
  FLOW PROCESS FROM NODE    125.00 TO NODE    125.00 IS CODE =   1
----------------------------------------------------------------------------
  >>>>>DESIGNATE INDEPENDENT STREAM FOR CONFLUENCE<<<<<
============================================================================
  TOTAL NUMBER OF STREAMS =  2
  CONFLUENCE VALUES USED FOR INDEPENDENT STREAM  1 ARE:
  TIME OF CONCENTRATION(MIN.) =   10.33
  RAINFALL INTENSITY(INCH/HR) =   5.28
  TOTAL STREAM AREA(ACRES) =     4.39
  PEAK FLOW RATE(CFS) AT CONFLUENCE =      8.11

****************************************************************************
  FLOW PROCESS FROM NODE    118.00 TO NODE    126.00 IS CODE =  21
----------------------------------------------------------------------------
  >>>>>RATIONAL METHOD INITIAL SUBAREA ANALYSIS<<<<<
============================================================================
  *USER SPECIFIED(GLOBAL):
  NATURAL DESERT LANDSCAPING RUNOFF COEFFICIENT = .3500
  S.C.S. CURVE NUMBER (AMC II) =  85
  INITIAL SUBAREA FLOW-LENGTH(FEET) =    75.00
  UPSTREAM ELEVATION(FEET) =    902.00
  DOWNSTREAM ELEVATION(FEET) =    900.00
  ELEVATION DIFFERENCE(FEET) =      2.00
  SUBAREA OVERLAND TIME OF FLOW(MIN.) =    8.431
   100 YEAR RAINFALL INTENSITY(INCH/HOUR) =  6.019
  SUBAREA RUNOFF(CFS) =      0.21
  TOTAL AREA(ACRES) =      0.10   TOTAL RUNOFF(CFS) =      0.21

****************************************************************************
  FLOW PROCESS FROM NODE    126.00 TO NODE    127.00 IS CODE =  51
----------------------------------------------------------------------------
  >>>>>COMPUTE TRAPEZOIDAL CHANNEL FLOW<<<<<
  >>>>>TRAVELTIME THRU SUBAREA (EXISTING ELEMENT)<<<<<
============================================================================
  ELEVATION DATA: UPSTREAM(FEET) =    900.00  DOWNSTREAM(FEET) =    803.00
  CHANNEL LENGTH THRU SUBAREA(FEET) =   468.90   CHANNEL SLOPE =  0.2069
  CHANNEL BASE(FEET) =    3.00   "Z" FACTOR =   2.000
  MANNING'S FACTOR = 0.030   MAXIMUM DEPTH(FEET) =  10.00
   100 YEAR RAINFALL INTENSITY(INCH/HOUR) =  5.408
  *USER SPECIFIED(GLOBAL):
  NATURAL DESERT LANDSCAPING RUNOFF COEFFICIENT = .3500
  S.C.S. CURVE NUMBER (AMC II) =  85
  TRAVEL TIME COMPUTED USING ESTIMATED FLOW(CFS) =       1.95
  TRAVEL TIME THRU SUBAREA BASED ON VELOCITY(FEET/SEC.) =   5.13
  AVERAGE FLOW DEPTH(FEET) =   0.12   TRAVEL TIME(MIN.) =   1.52
  Tc(MIN.) =    9.95
  SUBAREA AREA(ACRES) =     1.83       SUBAREA RUNOFF(CFS) =    3.46
  AREA-AVERAGE RUNOFF COEFFICIENT =  0.350
  TOTAL AREA(ACRES) =        1.9         PEAK FLOW RATE(CFS) =       3.65

  END OF SUBAREA CHANNEL FLOW HYDRAULICS:
  DEPTH(FEET) =  0.17   FLOW VELOCITY(FEET/SEC.) =   6.40
  LONGEST FLOWPATH FROM NODE    118.00 TO NODE    127.00 =     543.90 FEET.
```

```
****************************************************************************
  FLOW PROCESS FROM NODE    127.00 TO NODE    125.00 IS CODE =  51
----------------------------------------------------------------------------
  >>>>>COMPUTE TRAPEZOIDAL CHANNEL FLOW<<<<<
  >>>>>TRAVELTIME THRU SUBAREA (EXISTING ELEMENT)<<<<<
============================================================================
  ELEVATION DATA: UPSTREAM(FEET) =    803.00  DOWNSTREAM(FEET) =    786.00
  CHANNEL LENGTH THRU SUBAREA(FEET) =   187.00   CHANNEL SLOPE =  0.0909
  CHANNEL BASE(FEET) =    3.00   "Z" FACTOR =   2.000
  MANNING'S FACTOR = 0.030   MAXIMUM DEPTH(FEET) =  10.00
   100 YEAR RAINFALL INTENSITY(INCH/HOUR) =  5.200
  *USER SPECIFIED(GLOBAL):
  NATURAL DESERT LANDSCAPING RUNOFF COEFFICIENT = .3500
  S.C.S. CURVE NUMBER (AMC II) =  85
  TRAVEL TIME COMPUTED USING ESTIMATED FLOW(CFS) =       4.02
  TRAVEL TIME THRU SUBAREA BASED ON VELOCITY(FEET/SEC.) =   5.00
  AVERAGE FLOW DEPTH(FEET) =   0.23   TRAVEL TIME(MIN.) =   0.62
  Tc(MIN.) =   10.58
  SUBAREA AREA(ACRES) =     0.40       SUBAREA RUNOFF(CFS) =    0.73
  AREA-AVERAGE RUNOFF COEFFICIENT =  0.350
  TOTAL AREA(ACRES) =        2.3         PEAK FLOW RATE(CFS) =       4.24

  END OF SUBAREA CHANNEL FLOW HYDRAULICS:
  DEPTH(FEET) =  0.24   FLOW VELOCITY(FEET/SEC.) =   5.09
  LONGEST FLOWPATH FROM NODE    118.00 TO NODE    125.00 =     730.90 FEET.

****************************************************************************
  FLOW PROCESS FROM NODE    125.00 TO NODE    125.00 IS CODE =   1
----------------------------------------------------------------------------
  >>>>>DESIGNATE INDEPENDENT STREAM FOR CONFLUENCE<<<<<
  >>>>>AND COMPUTE VARIOUS CONFLUENCED STREAM VALUES<<<<<
============================================================================
  TOTAL NUMBER OF STREAMS =  2
  CONFLUENCE VALUES USED FOR INDEPENDENT STREAM  2 ARE:
  TIME OF CONCENTRATION(MIN.) =   10.58
  RAINFALL INTENSITY(INCH/HR) =   5.20
  TOTAL STREAM AREA(ACRES) =     2.33
  PEAK FLOW RATE(CFS) AT CONFLUENCE =      4.24

  ** CONFLUENCE DATA **
  STREAM     RUNOFF       Tc      INTENSITY      AREA
  NUMBER      (CFS)     (MIN.)   (INCH/HOUR)    (ACRE)
      1        8.11    10.33        5.279          4.39
      2        4.24    10.58        5.200          2.33

  RAINFALL INTENSITY AND TIME OF CONCENTRATION RATIO
  CONFLUENCE FORMULA USED FOR  2 STREAMS.

  ** PEAK FLOW RATE TABLE **
  STREAM     RUNOFF      Tc      INTENSITY
  NUMBER      (CFS)    (MIN.)   (INCH/HOUR)
      1       12.25    10.33       5.279
      2       12.23    10.58       5.200

  COMPUTED CONFLUENCE ESTIMATES ARE AS FOLLOWS:
  PEAK FLOW RATE(CFS) =      12.25   Tc(MIN.) =   10.33
  TOTAL AREA(ACRES) =        6.7
  LONGEST FLOWPATH FROM NODE    118.00 TO NODE    125.00 =     832.30 FEET.

****************************************************************************
  FLOW PROCESS FROM NODE    125.00 TO NODE    128.00 IS CODE =  51
----------------------------------------------------------------------------
```

```
  >>>>>COMPUTE TRAPEZOIDAL CHANNEL FLOW<<<<<
  >>>>>TRAVELTIME THRU SUBAREA (EXISTING ELEMENT)<<<<<
================================================================================
  ELEVATION DATA: UPSTREAM(FEET) =    786.00  DOWNSTREAM(FEET) =    780.00
  CHANNEL LENGTH THRU SUBAREA(FEET) =    94.70   CHANNEL SLOPE =  0.0634
  CHANNEL BASE(FEET) =    3.00   "Z" FACTOR =   2.000
  MANNING'S FACTOR = 0.030   MAXIMUM DEPTH(FEET) =  10.00
   100 YEAR RAINFALL INTENSITY(INCH/HOUR) =  5.200
  *USER SPECIFIED(GLOBAL):
  NATURAL DESERT LANDSCAPING RUNOFF COEFFICIENT = .3500
  S.C.S. CURVE NUMBER (AMC II) =  85
  TRAVEL TIME COMPUTED USING ESTIMATED FLOW(CFS) =      12.33
  TRAVEL TIME THRU SUBAREA BASED ON VELOCITY(FEET/SEC.) =   6.43
  AVERAGE FLOW DEPTH(FEET) =   0.48   TRAVEL TIME(MIN.) =   0.25
  Tc(MIN.) =   10.58
  SUBAREA AREA(ACRES) =     0.08       SUBAREA RUNOFF(CFS) =    0.15
  AREA-AVERAGE RUNOFF COEFFICIENT =  0.350
  TOTAL AREA(ACRES) =        6.8         PEAK FLOW RATE(CFS) =      12.38

  END OF SUBAREA CHANNEL FLOW HYDRAULICS:
  DEPTH(FEET) =  0.48   FLOW VELOCITY(FEET/SEC.) =   6.45
  LONGEST FLOWPATH FROM NODE    118.00 TO NODE    128.00 =     927.00 FEET.

****************************************************************************
  FLOW PROCESS FROM NODE    128.00 TO NODE    128.00 IS CODE =   1
----------------------------------------------------------------------------
  >>>>>DESIGNATE INDEPENDENT STREAM FOR CONFLUENCE<<<<<
================================================================================
  TOTAL NUMBER OF STREAMS =  2
  CONFLUENCE VALUES USED FOR INDEPENDENT STREAM  1 ARE:
  TIME OF CONCENTRATION(MIN.) =   10.58
  RAINFALL INTENSITY(INCH/HR) =   5.20
  TOTAL STREAM AREA(ACRES) =     6.80
  PEAK FLOW RATE(CFS) AT CONFLUENCE =     12.38

****************************************************************************
  FLOW PROCESS FROM NODE    129.00 TO NODE    130.00 IS CODE =  21
----------------------------------------------------------------------------
  >>>>>RATIONAL METHOD INITIAL SUBAREA ANALYSIS<<<<<
================================================================================
  *USER SPECIFIED(GLOBAL):
  NATURAL DESERT LANDSCAPING RUNOFF COEFFICIENT = .3500
  S.C.S. CURVE NUMBER (AMC II) =  85
  INITIAL SUBAREA FLOW-LENGTH(FEET) =   106.00
  UPSTREAM ELEVATION(FEET) =    814.00
  DOWNSTREAM ELEVATION(FEET) =    807.00
  ELEVATION DIFFERENCE(FEET) =      7.00
  SUBAREA OVERLAND TIME OF FLOW(MIN.) =    7.196
  WARNING: INITIAL SUBAREA FLOW PATH LENGTH IS GREATER THAN
           THE MAXIMUM OVERLAND FLOW LENGTH =   100.00
           (Reference: Table 3-1B of Hydrology Manual)
           THE MAXIMUM OVERLAND FLOW LENGTH IS USED IN Tc CALCULATION!
   100 YEAR RAINFALL INTENSITY(INCH/HOUR) =  6.666
  SUBAREA RUNOFF(CFS) =      0.23
  TOTAL AREA(ACRES) =      0.10   TOTAL RUNOFF(CFS) =      0.23

****************************************************************************
  FLOW PROCESS FROM NODE    130.00 TO NODE    128.00 IS CODE =  51
----------------------------------------------------------------------------
  >>>>>COMPUTE TRAPEZOIDAL CHANNEL FLOW<<<<<
  >>>>>TRAVELTIME THRU SUBAREA (EXISTING ELEMENT)<<<<<
================================================================================
  ELEVATION DATA: UPSTREAM(FEET) =    807.00  DOWNSTREAM(FEET) =    780.00
```

```
  CHANNEL LENGTH THRU SUBAREA(FEET) =   337.30   CHANNEL SLOPE =  0.0800
  CHANNEL BASE(FEET) =    3.00   "Z" FACTOR =   2.000
  MANNING'S FACTOR = 0.030   MAXIMUM DEPTH(FEET) =  10.00
   100 YEAR RAINFALL INTENSITY(INCH/HOUR) =  5.595
  *USER SPECIFIED(GLOBAL):
  NATURAL DESERT LANDSCAPING RUNOFF COEFFICIENT = .3500
  S.C.S. CURVE NUMBER (AMC II) =  85
  TRAVEL TIME COMPUTED USING ESTIMATED FLOW(CFS) =       0.63
  TRAVEL TIME THRU SUBAREA BASED ON VELOCITY(FEET/SEC.) =   2.50
  AVERAGE FLOW DEPTH(FEET) =   0.08   TRAVEL TIME(MIN.) =   2.25
  Tc(MIN.) =    9.44
  SUBAREA AREA(ACRES) =     0.40       SUBAREA RUNOFF(CFS) =    0.78
  AREA-AVERAGE RUNOFF COEFFICIENT =  0.350
  TOTAL AREA(ACRES) =        0.5         PEAK FLOW RATE(CFS) =       0.98

  END OF SUBAREA CHANNEL FLOW HYDRAULICS:
  DEPTH(FEET) =  0.10   FLOW VELOCITY(FEET/SEC.) =   2.94
  LONGEST FLOWPATH FROM NODE    129.00 TO NODE    128.00 =     443.30 FEET.

****************************************************************************
  FLOW PROCESS FROM NODE    128.00 TO NODE    128.00 IS CODE =   1
----------------------------------------------------------------------------
  >>>>>DESIGNATE INDEPENDENT STREAM FOR CONFLUENCE<<<<<
  >>>>>AND COMPUTE VARIOUS CONFLUENCED STREAM VALUES<<<<<
============================================================================
  TOTAL NUMBER OF STREAMS =  2
  CONFLUENCE VALUES USED FOR INDEPENDENT STREAM  2 ARE:
  TIME OF CONCENTRATION(MIN.) =    9.44
  RAINFALL INTENSITY(INCH/HR) =   5.60
  TOTAL STREAM AREA(ACRES) =     0.50
  PEAK FLOW RATE(CFS) AT CONFLUENCE =      0.98

  ** CONFLUENCE DATA **
  STREAM     RUNOFF       Tc      INTENSITY      AREA
  NUMBER      (CFS)     (MIN.)   (INCH/HOUR)    (ACRE)
      1       12.38    10.58        5.200          6.80
      2        0.98     9.44        5.595          0.50

  RAINFALL INTENSITY AND TIME OF CONCENTRATION RATIO
  CONFLUENCE FORMULA USED FOR  2 STREAMS.

  ** PEAK FLOW RATE TABLE **
  STREAM     RUNOFF      Tc      INTENSITY
  NUMBER      (CFS)    (MIN.)   (INCH/HOUR)
      1       12.48     9.44       5.595
      2       13.29    10.58       5.200

  COMPUTED CONFLUENCE ESTIMATES ARE AS FOLLOWS:
  PEAK FLOW RATE(CFS) =      13.29   Tc(MIN.) =   10.58
  TOTAL AREA(ACRES) =        7.3
  LONGEST FLOWPATH FROM NODE    118.00 TO NODE    128.00 =     927.00 FEET.

****************************************************************************
  FLOW PROCESS FROM NODE    128.00 TO NODE    115.00 IS CODE =  51
----------------------------------------------------------------------------
  >>>>>COMPUTE TRAPEZOIDAL CHANNEL FLOW<<<<<
  >>>>>TRAVELTIME THRU SUBAREA (EXISTING ELEMENT)<<<<<
============================================================================
  ELEVATION DATA: UPSTREAM(FEET) =    780.00  DOWNSTREAM(FEET) =    775.00
  CHANNEL LENGTH THRU SUBAREA(FEET) =   151.00   CHANNEL SLOPE =  0.0331
  CHANNEL BASE(FEET) =    3.00   "Z" FACTOR =   2.000
  MANNING'S FACTOR = 0.030   MAXIMUM DEPTH(FEET) =  10.00
   100 YEAR RAINFALL INTENSITY(INCH/HOUR) =  5.054
```

```
  *USER SPECIFIED(GLOBAL):
  NATURAL DESERT LANDSCAPING RUNOFF COEFFICIENT = .3500
  S.C.S. CURVE NUMBER (AMC II) =  85
  TRAVEL TIME COMPUTED USING ESTIMATED FLOW(CFS) =      13.66
  TRAVEL TIME THRU SUBAREA BASED ON VELOCITY(FEET/SEC.) =   5.27
  AVERAGE FLOW DEPTH(FEET) =   0.61   TRAVEL TIME(MIN.) =   0.48
  Tc(MIN.) =   11.06
  SUBAREA AREA(ACRES) =     0.42       SUBAREA RUNOFF(CFS) =    0.74
  AREA-AVERAGE RUNOFF COEFFICIENT =  0.350
  TOTAL AREA(ACRES) =        7.7         PEAK FLOW RATE(CFS) =      13.65

  END OF SUBAREA CHANNEL FLOW HYDRAULICS:
  DEPTH(FEET) =  0.61   FLOW VELOCITY(FEET/SEC.) =   5.27
  LONGEST FLOWPATH FROM NODE    118.00 TO NODE    115.00 =    1078.00 FEET.

****************************************************************************
  FLOW PROCESS FROM NODE    115.00 TO NODE    115.00 IS CODE =  11
----------------------------------------------------------------------------
  >>>>>CONFLUENCE MEMORY BANK # 1 WITH THE MAIN-STREAM MEMORY<<<<<
============================================================================

  ** MAIN STREAM CONFLUENCE DATA **
  STREAM     RUNOFF      Tc      INTENSITY     AREA
  NUMBER      (CFS)    (MIN.)   (INCH/HOUR)   (ACRE)
      1       13.65    11.06       5.054        7.72
  LONGEST FLOWPATH FROM NODE    118.00 TO NODE    115.00 =    1078.00 FEET.

  ** MEMORY BANK #  1 CONFLUENCE DATA **
  STREAM     RUNOFF      Tc      INTENSITY     AREA
  NUMBER      (CFS)    (MIN.)   (INCH/HOUR)   (ACRE)
      1       35.40    10.25       5.307       19.06
  LONGEST FLOWPATH FROM NODE    100.00 TO NODE    115.00 =    1780.15 FEET.

  ** PEAK FLOW RATE TABLE **
  STREAM    RUNOFF       Tc      INTENSITY
  NUMBER     (CFS)     (MIN.)   (INCH/HOUR)
      1      48.06      10.25        5.307
      2      47.37      11.06        5.054

  COMPUTED CONFLUENCE ESTIMATES ARE AS FOLLOWS:
  PEAK FLOW RATE(CFS) =      48.06   Tc(MIN.) =   10.25
  TOTAL AREA(ACRES) =       26.8
============================================================================
  END OF STUDY SUMMARY:
  TOTAL AREA(ACRES)     =       26.8  TC(MIN.) =     10.25
  PEAK FLOW RATE(CFS)   =      48.06
============================================================================
============================================================================
  END OF RATIONAL METHOD ANALYSIS
```

BASIN B SEE RUN 500 FOR THE CONTINUATION OF BASIN B

FUSCOE ENGINEERING
6390 Greenwich Drive, Suite 170
San Diego, California 92122
tel 858.554.1500 • fax 858.597.0335
www.fuscoe.com

Job Name: Eden Hills
Existing Hydrology
100 year Design Storm
Job #: 2690-007-02

Date: Aug 2013

EDEN200.DAT

Node to Node		Code	Elev 1 (feet)	Elev 2 (feet)	Length (feet)	C or Fric Co.	Area (ac.)	Comments
200	201	2	975.0	962.0	161.80	0.35	0.10	
201	202	5	962.0	923.0	505.90	0.35	1.29	
202	203	5	923.0	906.0	190.30	0.350	0.410	
203	203	1	-	-	-	-	-	1 of 2
204	205	2	1015.0	1007.0	78.00	0.35	0.13	
205	206	5	1000.0	962.0	378.20	0.350	1.71	
206	207	5	962.0	929.0	235.50	0.35	1.46	
207	203	5	929.0	906.0	222.40	0.35	0.74	
203	203	1	-	-	-	-	-	2 of 2
203	208	5	906.0	878.0	199.20	0.35	1.00	
208	209	5	878.0	844.0	316.60	0.35	2.95	
209	210	5	844.0	804.0	297.30	0.35	2.36	
210	211	5	804.0	762.0	252.00	0.350	2.39	
211	211	10	-	-	-	-	-	Save to Bank 1
212	213	2	943.0	929.0	143.50	0.35	0.10	
213	214	5	929.0	913.0	156.60	0.35	0.37	
214	215	5	913.0	856.0	293.30	0.350	0.77	
215	216	5	856.0	842.0	145.30	0.35	1.32	
216	217	5	842.0	832.0	165.20	0.35	2.58	
217	218	5	832.0	804.0	185.30	0.350	0.67	
218	218	1	-	-	-	-	-	1 of 2
219	220	2	914.0	899.0	114.20	0.35	0.10	
220	221	5	899.0	813.0	312.10	0.35	1.15	
221	218	5	813.0	804.0	71.20	0.35	0.55	
218	218	1	-	-	-	-	-	2 of 2
218	222	5	804.0	792.0	76.40	0.35	0.42	
222	211	5	792.0	762.0	237.80	0.35	1.91	
211	211	11	-	-	-	-	-	Confl. w/ Bank 1
211	211	12	-	-	-	-	-	Clean Bank 1
211	223	5	762.0	759.0	77.30	0.35	0.33	
223	224	5	759.0	750.0	131.50	0.35	0.97	
224	225	5	750.0	742.0	125.10	0.35	0.11	
225	225	1	-	-	-	-	-	1 of 3

FUSCOE ENGINEERING
6390 Greenwich Drive, Suite 170
San Diego, California 92122
tel 858.554.1500 • fax 858.597.0335
www.fuscoe.com

Job Name: Eden Hills
Existing Hydrology
100 year Design Storm
Job #: 2690-007-02

Date: Aug 2013
Run Name: 200 Series
Page: 2

Node to Node		Code	Elev 1 (feet)	Elev 2 (feet)	Length (feet)	C or Fric Co.	Area (ac.)	Comments
226	227	2	854.0	834.0	120.30	0.35	0.10	
227	228	5	834.0	812.0	129.70	0.35	0.31	
228	225	5	812.0	742.0	466.30	0.35	1.38	
225	225	1	-	-	-	-	-	2 of 3
229	230	2	868.0	856.0	79.00	0.35	0.13	
230	231	5	856.0	790.0	205.40	0.35	1.11	
231	232	5	790.0	760.0	182.50	0.35	1.12	
232	225	5	760.0	742.0	160.60	0.35	0.54	
225	225	1	-	-	-	-	-	3 of 3
225	233	5	742.0	724.0	352.60	0.35	1.42	
233	233	1	-	-	-	-	-	1 of 3
234	235	2	804.0	788.0	115.70	0.35	0.10	
235	233	5	788.0	724.0	511.30	0.35	1.42	
233	233	1	-	-	-	-	-	2 of 3
236	237	2	785.0	767.0	121.40	0.35	0.10	
237	238	5	767.0	736.0	294.70	0.35	0.87	
238	233	5	736.0	724.0	191.40	0.35	0.33	
233	233	1	-	-	-	-	-	3 of 3
233	239	5	724.0	723.0	97.20	0.35	0.87	
239	240	5	723.0	714.0	164.70	0.35	1.25	
240	241	5	714.0	704.0	215.20	0.35	1.24	
241	241	1	-	-	-	-	-	1 of 2
242	243	2	808.0	792.0	95.40	0.35	0.11	
243	244	5	792.0	724.0	416.70	0.35	2.34	
244	241	5	724.0	704.0	282.80	0.35	0.67	
241	241	1	-	-	-	-	-	2 of 2
241	245	5	704.0	672.0	390.00	0.35	2.38	
245	245	1	-	-	-	-	-	1 of 2
246	247	2	732.0	726.0	75.00	0.35	0.10	
247	248	5	726.0	686.0	367.60	0.35	2.48	
248	245	5	686.0	672.0	150.80	0.35	1.13	
245	245	1	-	-	-	-	-	2 of 2
245	245	10	-	-	-	-	-	Save to Bank 2

FUSCOE ENGINEERING
6390 Greenwich Drive, Suite 170
San Diego, California 92122
tel 858.554.1500 ◦ fax 858.597.0335
www.fuscoe.com

Existing Hydrology
100 year Design Storm

Job #: 2690-007-02

Run Name: 200 Series

Node to Node		Code	Elev 1 (feet)	Elev 2 (feet)	Length (feet)	C or Fric Co.	Area (ac.)	Comments
249	250	2	864.0	842.0	124.40	0.41	0.10	
250	251	5	842.0	750.0	602.60	0.41	2.79	
251	252	5	750.0	730.0	251.80	0.41	3.26	
252	253	5	730.0	720.0	155.80	0.41	0.67	
253	253	1	-	-	-	-	-	1 of 3
254	255	2	865.0	862.0	84.80	0.35	0.11	
255	256	5	862.0	744.0	367.50	0.35	1.90	
256	253	5	744.0	720.0	247.60	0.41		
253	253	1	-	-	-	-	-	2 of 3
257	258	2	866.0	858.0	75.00	0.35	0.13	
258	259	5	858.0	774.0	294.70	0.35	0.70	
259	260	5	774.0	762.0	66.30	0.35	0.45	
260	253	5	762.0	720.0	372.30	0.35	0.94	
253	253	1	-	-	-	-	-	3 of 3
253	261	5	720.0	696.0	376.00	0.41	1.73	
261	261	1	-	-	-	-	-	1 of 2
262	263	2	785.0	782.0	109.20	0.41	0.11	
263	264	5	782.0	714.0	597.70	0.41	1.93	
264	261	5	714.0	696.0	195.60	0.41	1.11	
261	261	1	-	-	-	-	-	2 of 2
261	245	5	696.0	672.0	284.70	0.41	0.88	
245	245	11	-	-	-	-	-	Confl. w/ Bank 2
245	266	5	672.0	668.0	184.50	0.41	0.69	
266	266	1	-	-	-	-	-	1 of 3
267	268	2	785.0	782.0	75.00	0.41	0.10	
268	269	5	782.0	758.0	366.00	0.41	1.52	
269	266	5	758.0	668.0	534.40	0.41	2.77	
266	266	1	-	-	-	-	-	2 of 3
270	271	2	724.0	709.0	119.60	0.41	0.10	
271	266	5	709.0	668.0	142.10	0.41	0.46	
266	266	1	-	-	-	-	-	3 of 3
266	538	5	668.0	654.0	290.00	0.41		

```
****************************************************************************

            RATIONAL METHOD HYDROLOGY COMPUTER PROGRAM PACKAGE
            Reference: SAN DIEGO COUNTY FLOOD CONTROL DISTRICT
                         2003,1985,1981 HYDROLOGY MANUAL
         (c) Copyright 1982-2012 Advanced Engineering Software (aes)
             Ver. 19.0 Release Date: 06/01/2012  License ID 1355

                           Analysis prepared by:

                             Fuscoe Engineering
                             6390 Greenwich Dr.
                                 Suite 170
                            San Diego, CA 92122

 ************************** DESCRIPTION OF STUDY **************************
* EDEN HILLS                                                               *
* EXISTING HYDROLOGY STUDY - 200 SERIES                                    *
* OCTOBER 20, 2014                                                         *
 ***************************************************************************

  FILE NAME: EDEN200.DAT
  TIME/DATE OF STUDY: 10:06 10/20/2014
----------------------------------------------------------------------------
  USER SPECIFIED HYDROLOGY AND HYDRAULIC MODEL INFORMATION:
----------------------------------------------------------------------------
  2003 SAN DIEGO MANUAL CRITERIA

  USER SPECIFIED STORM EVENT(YEAR) = 100.00
  6-HOUR DURATION PRECIPITATION (INCHES) =   3.200
  SPECIFIED MINIMUM PIPE SIZE(INCH) =  12.00
  SPECIFIED PERCENT OF GRADIENTS(DECIMAL) TO USE FOR FRICTION SLOPE = 0.90
  SAN DIEGO HYDROLOGY MANUAL "C"-VALUES USED FOR RATIONAL METHOD
  NOTE: USE MODIFIED RATIONAL METHOD PROCEDURES FOR CONFLUENCE ANALYSIS
  *USER-DEFINED STREET-SECTIONS FOR COUPLED PIPEFLOW AND STREETFLOW MODEL*
     HALF-  CROWN TO   STREET-CROSSFALL:   CURB  GUTTER-GEOMETRIES:  MANNING
     WIDTH  CROSSFALL  IN-  / OUT-/PARK-  HEIGHT  WIDTH  LIP   HIKE  FACTOR
NO.   (FT)     (FT)    SIDE / SIDE/ WAY    (FT)    (FT)  (FT)  (FT)    (n)
===  =====  =========  =================  ======  ===== ====== ===== =======
  1   30.0     20.0    0.018/0.018/0.020   0.67    2.00 0.0312 0.167 0.0150

  GLOBAL STREET FLOW-DEPTH CONSTRAINTS:
    1. Relative Flow-Depth =  0.00 FEET
       as (Maximum Allowable Street Flow Depth) - (Top-of-Curb)
    2. (Depth)*(Velocity) Constraint =  6.0 (FT*FT/S)
  *SIZE PIPE WITH A FLOW CAPACITY GREATER THAN
   OR EQUAL TO THE UPSTREAM TRIBUTARY PIPE.*

****************************************************************************
  FLOW PROCESS FROM NODE    200.00 TO NODE    201.00 IS CODE =  21
----------------------------------------------------------------------------
  >>>>>RATIONAL METHOD INITIAL SUBAREA ANALYSIS<<<<<
============================================================================
  *USER SPECIFIED(SUBAREA):
  NATURAL DESERT LANDSCAPING RUNOFF COEFFICIENT = .3500
  S.C.S. CURVE NUMBER (AMC II) =  85
  INITIAL SUBAREA FLOW-LENGTH(FEET) =   161.80
  UPSTREAM ELEVATION(FEET) =    975.00
  DOWNSTREAM ELEVATION(FEET) =    962.00
  ELEVATION DIFFERENCE(FEET) =     13.00
  SUBAREA OVERLAND TIME OF FLOW(MIN.) =    6.741
  WARNING: INITIAL SUBAREA FLOW PATH LENGTH IS GREATER THAN
```

```
          THE MAXIMUM OVERLAND FLOW LENGTH =   100.00
          (Reference: Table 3-1B of Hydrology Manual)
          THE MAXIMUM OVERLAND FLOW LENGTH IS USED IN Tc CALCULATION!
   100 YEAR RAINFALL INTENSITY(INCH/HOUR) =  6.954
  SUBAREA RUNOFF(CFS) =      0.24
  TOTAL AREA(ACRES) =      0.10   TOTAL RUNOFF(CFS) =      0.24

****************************************************************************
  FLOW PROCESS FROM NODE    201.00 TO NODE    202.00 IS CODE =  51
----------------------------------------------------------------------------
  >>>>>COMPUTE TRAPEZOIDAL CHANNEL FLOW<<<<<
  >>>>>TRAVELTIME THRU SUBAREA (EXISTING ELEMENT)<<<<<
============================================================================
  ELEVATION DATA: UPSTREAM(FEET) =    962.00  DOWNSTREAM(FEET) =    923.00
  CHANNEL LENGTH THRU SUBAREA(FEET) =   505.90   CHANNEL SLOPE =  0.0771
  CHANNEL BASE(FEET) =    3.00   "Z" FACTOR =   2.000
  MANNING'S FACTOR = 0.030   MAXIMUM DEPTH(FEET) =  10.00
   100 YEAR RAINFALL INTENSITY(INCH/HOUR) =  5.668
  *USER SPECIFIED(SUBAREA):
  NATURAL DESERT LANDSCAPING RUNOFF COEFFICIENT = .3500
  S.C.S. CURVE NUMBER (AMC II) =  85
  TRAVEL TIME COMPUTED USING ESTIMATED FLOW(CFS) =       1.54
  TRAVEL TIME THRU SUBAREA BASED ON VELOCITY(FEET/SEC.) =   3.35
  AVERAGE FLOW DEPTH(FEET) =   0.14   TRAVEL TIME(MIN.) =   2.51
  Tc(MIN.) =    9.25
  SUBAREA AREA(ACRES) =     1.29       SUBAREA RUNOFF(CFS) =    2.56
  AREA-AVERAGE RUNOFF COEFFICIENT =  0.350
  TOTAL AREA(ACRES) =        1.4         PEAK FLOW RATE(CFS) =       2.76

  END OF SUBAREA CHANNEL FLOW HYDRAULICS:
  DEPTH(FEET) =  0.19   FLOW VELOCITY(FEET/SEC.) =   4.21
  LONGEST FLOWPATH FROM NODE    200.00 TO NODE    202.00 =     667.70 FEET.

****************************************************************************
  FLOW PROCESS FROM NODE    202.00 TO NODE    203.00 IS CODE =  51
----------------------------------------------------------------------------
  >>>>>COMPUTE TRAPEZOIDAL CHANNEL FLOW<<<<<
  >>>>>TRAVELTIME THRU SUBAREA (EXISTING ELEMENT)<<<<<
============================================================================
  ELEVATION DATA: UPSTREAM(FEET) =    923.00  DOWNSTREAM(FEET) =    906.00
  CHANNEL LENGTH THRU SUBAREA(FEET) =   190.30   CHANNEL SLOPE =  0.0893
  CHANNEL BASE(FEET) =    3.00   "Z" FACTOR =   2.000
  MANNING'S FACTOR = 0.030   MAXIMUM DEPTH(FEET) =  10.00
   100 YEAR RAINFALL INTENSITY(INCH/HOUR) =  5.411
  *USER SPECIFIED(SUBAREA):
  NATURAL DESERT LANDSCAPING RUNOFF COEFFICIENT = .3500
  S.C.S. CURVE NUMBER (AMC II) =  85
  TRAVEL TIME COMPUTED USING ESTIMATED FLOW(CFS) =       3.15
  TRAVEL TIME THRU SUBAREA BASED ON VELOCITY(FEET/SEC.) =   4.59
  AVERAGE FLOW DEPTH(FEET) =   0.20   TRAVEL TIME(MIN.) =   0.69
  Tc(MIN.) =    9.94
  SUBAREA AREA(ACRES) =     0.41       SUBAREA RUNOFF(CFS) =    0.78
  AREA-AVERAGE RUNOFF COEFFICIENT =  0.350
  TOTAL AREA(ACRES) =        1.8         PEAK FLOW RATE(CFS) =       3.41

  END OF SUBAREA CHANNEL FLOW HYDRAULICS:
  DEPTH(FEET) =  0.21   FLOW VELOCITY(FEET/SEC.) =   4.78
  LONGEST FLOWPATH FROM NODE    200.00 TO NODE    203.00 =     858.00 FEET.

****************************************************************************
  FLOW PROCESS FROM NODE    203.00 TO NODE    203.00 IS CODE =   1
----------------------------------------------------------------------------
  >>>>>DESIGNATE INDEPENDENT STREAM FOR CONFLUENCE<<<<<
```

```
==============================================================================
  TOTAL NUMBER OF STREAMS =  2
  CONFLUENCE VALUES USED FOR INDEPENDENT STREAM  1 ARE:
  TIME OF CONCENTRATION(MIN.) =    9.94
  RAINFALL INTENSITY(INCH/HR) =   5.41
  TOTAL STREAM AREA(ACRES) =     1.80
  PEAK FLOW RATE(CFS) AT CONFLUENCE =      3.41

******************************************************************************
  FLOW PROCESS FROM NODE    204.00 TO NODE    205.00 IS CODE =  21
------------------------------------------------------------------------------
  >>>>>RATIONAL METHOD INITIAL SUBAREA ANALYSIS<<<<<
==============================================================================
  *USER SPECIFIED(SUBAREA):
  NATURAL DESERT LANDSCAPING RUNOFF COEFFICIENT = .3500
  S.C.S. CURVE NUMBER (AMC II) =  85
  INITIAL SUBAREA FLOW-LENGTH(FEET) =    78.00
  UPSTREAM ELEVATION(FEET) =   1015.00
  DOWNSTREAM ELEVATION(FEET) =   1007.00
  ELEVATION DIFFERENCE(FEET) =      8.00
  SUBAREA OVERLAND TIME OF FLOW(MIN.) =    5.535
  WARNING: THE MAXIMUM OVERLAND FLOW SLOPE, 10.%, IS USED IN Tc CALCULATION!
   100 YEAR RAINFALL INTENSITY(INCH/HOUR) =  7.897
  SUBAREA RUNOFF(CFS) =      0.36
  TOTAL AREA(ACRES) =      0.13   TOTAL RUNOFF(CFS) =      0.36

******************************************************************************
  FLOW PROCESS FROM NODE    205.00 TO NODE    206.00 IS CODE =  51
------------------------------------------------------------------------------
  >>>>>COMPUTE TRAPEZOIDAL CHANNEL FLOW<<<<<
  >>>>>TRAVELTIME THRU SUBAREA (EXISTING ELEMENT)<<<<<
==============================================================================
  ELEVATION DATA: UPSTREAM(FEET) =   1000.00  DOWNSTREAM(FEET) =    962.00
  CHANNEL LENGTH THRU SUBAREA(FEET) =   378.20   CHANNEL SLOPE =  0.1005
  CHANNEL BASE(FEET) =    3.00   "Z" FACTOR =   2.000
  MANNING'S FACTOR = 0.030   MAXIMUM DEPTH(FEET) =  10.00
   100 YEAR RAINFALL INTENSITY(INCH/HOUR) =  6.802
  *USER SPECIFIED(SUBAREA):
  NATURAL DESERT LANDSCAPING RUNOFF COEFFICIENT = .3500
  S.C.S. CURVE NUMBER (AMC II) =  85
  TRAVEL TIME COMPUTED USING ESTIMATED FLOW(CFS) =       2.41
  TRAVEL TIME THRU SUBAREA BASED ON VELOCITY(FEET/SEC.) =   4.38
  AVERAGE FLOW DEPTH(FEET) =   0.16   TRAVEL TIME(MIN.) =   1.44
  Tc(MIN.) =    6.97
  SUBAREA AREA(ACRES) =     1.71       SUBAREA RUNOFF(CFS) =    4.07
  AREA-AVERAGE RUNOFF COEFFICIENT =  0.350
  TOTAL AREA(ACRES) =        1.8         PEAK FLOW RATE(CFS) =       4.38

  END OF SUBAREA CHANNEL FLOW HYDRAULICS:
  DEPTH(FEET) =  0.23   FLOW VELOCITY(FEET/SEC.) =   5.41
  LONGEST FLOWPATH FROM NODE    204.00 TO NODE    206.00 =     456.20 FEET.

******************************************************************************
  FLOW PROCESS FROM NODE    206.00 TO NODE    207.00 IS CODE =  51
------------------------------------------------------------------------------
  >>>>>COMPUTE TRAPEZOIDAL CHANNEL FLOW<<<<<
  >>>>>TRAVELTIME THRU SUBAREA (EXISTING ELEMENT)<<<<<
==============================================================================
  ELEVATION DATA: UPSTREAM(FEET) =    962.00  DOWNSTREAM(FEET) =    929.00
  CHANNEL LENGTH THRU SUBAREA(FEET) =   235.50   CHANNEL SLOPE =  0.1401
  CHANNEL BASE(FEET) =    3.00   "Z" FACTOR =   2.000
  MANNING'S FACTOR = 0.030   MAXIMUM DEPTH(FEET) =  10.00
   100 YEAR RAINFALL INTENSITY(INCH/HOUR) =  6.457
```

```
  *USER SPECIFIED(SUBAREA):
  NATURAL DESERT LANDSCAPING RUNOFF COEFFICIENT = .3500
  S.C.S. CURVE NUMBER (AMC II) =  85
  TRAVEL TIME COMPUTED USING ESTIMATED FLOW(CFS) =       6.03
  TRAVEL TIME THRU SUBAREA BASED ON VELOCITY(FEET/SEC.) =   6.69
  AVERAGE FLOW DEPTH(FEET) =   0.26   TRAVEL TIME(MIN.) =   0.59
  Tc(MIN.) =    7.56
  SUBAREA AREA(ACRES) =     1.46       SUBAREA RUNOFF(CFS) =    3.30
  AREA-AVERAGE RUNOFF COEFFICIENT =  0.350
  TOTAL AREA(ACRES) =        3.3         PEAK FLOW RATE(CFS) =       7.46

  END OF SUBAREA CHANNEL FLOW HYDRAULICS:
  DEPTH(FEET) =  0.29   FLOW VELOCITY(FEET/SEC.) =   7.27
  LONGEST FLOWPATH FROM NODE    204.00 TO NODE    207.00 =     691.70 FEET.

****************************************************************************
  FLOW PROCESS FROM NODE    207.00 TO NODE    203.00 IS CODE =  51
----------------------------------------------------------------------------
  >>>>>COMPUTE TRAPEZOIDAL CHANNEL FLOW<<<<<
  >>>>>TRAVELTIME THRU SUBAREA (EXISTING ELEMENT)<<<<<
============================================================================
  ELEVATION DATA: UPSTREAM(FEET) =    929.00  DOWNSTREAM(FEET) =    906.00
  CHANNEL LENGTH THRU SUBAREA(FEET) =   222.40   CHANNEL SLOPE =  0.1034
  CHANNEL BASE(FEET) =    3.00   "Z" FACTOR =   2.000
  MANNING'S FACTOR = 0.030   MAXIMUM DEPTH(FEET) =  10.00
   100 YEAR RAINFALL INTENSITY(INCH/HOUR) =  6.172
  *USER SPECIFIED(SUBAREA):
  NATURAL DESERT LANDSCAPING RUNOFF COEFFICIENT = .3500
  S.C.S. CURVE NUMBER (AMC II) =  85
  TRAVEL TIME COMPUTED USING ESTIMATED FLOW(CFS) =       8.26
  TRAVEL TIME THRU SUBAREA BASED ON VELOCITY(FEET/SEC.) =   6.77
  AVERAGE FLOW DEPTH(FEET) =   0.33   TRAVEL TIME(MIN.) =   0.55
  Tc(MIN.) =    8.11
  SUBAREA AREA(ACRES) =     0.74       SUBAREA RUNOFF(CFS) =    1.60
  AREA-AVERAGE RUNOFF COEFFICIENT =  0.350
  TOTAL AREA(ACRES) =        4.0         PEAK FLOW RATE(CFS) =       8.73

  END OF SUBAREA CHANNEL FLOW HYDRAULICS:
  DEPTH(FEET) =  0.35   FLOW VELOCITY(FEET/SEC.) =   6.83
  LONGEST FLOWPATH FROM NODE    204.00 TO NODE    203.00 =     914.10 FEET.

****************************************************************************
  FLOW PROCESS FROM NODE    203.00 TO NODE    203.00 IS CODE =   1
----------------------------------------------------------------------------
  >>>>>DESIGNATE INDEPENDENT STREAM FOR CONFLUENCE<<<<<
  >>>>>AND COMPUTE VARIOUS CONFLUENCED STREAM VALUES<<<<<
============================================================================
  TOTAL NUMBER OF STREAMS =  2
  CONFLUENCE VALUES USED FOR INDEPENDENT STREAM  2 ARE:
  TIME OF CONCENTRATION(MIN.) =    8.11
  RAINFALL INTENSITY(INCH/HR) =   6.17
  TOTAL STREAM AREA(ACRES) =     4.04
  PEAK FLOW RATE(CFS) AT CONFLUENCE =      8.73

  ** CONFLUENCE DATA **
  STREAM     RUNOFF       Tc      INTENSITY      AREA
  NUMBER      (CFS)     (MIN.)   (INCH/HOUR)    (ACRE)
      1        3.41     9.94        5.411          1.80
      2        8.73     8.11        6.172          4.04

  RAINFALL INTENSITY AND TIME OF CONCENTRATION RATIO
  CONFLUENCE FORMULA USED FOR  2 STREAMS.
```

```
  ** PEAK FLOW RATE TABLE **
  STREAM     RUNOFF      Tc      INTENSITY
  NUMBER      (CFS)    (MIN.)   (INCH/HOUR)
      1       11.51     8.11       6.172
      2       11.06     9.94       5.411

  COMPUTED CONFLUENCE ESTIMATES ARE AS FOLLOWS:
  PEAK FLOW RATE(CFS) =      11.51   Tc(MIN.) =    8.11
  TOTAL AREA(ACRES) =        5.8
  LONGEST FLOWPATH FROM NODE    204.00 TO NODE    203.00 =     914.10 FEET.

****************************************************************************
  FLOW PROCESS FROM NODE    203.00 TO NODE    208.00 IS CODE =  51
----------------------------------------------------------------------------
  >>>>>COMPUTE TRAPEZOIDAL CHANNEL FLOW<<<<<
  >>>>>TRAVELTIME THRU SUBAREA (EXISTING ELEMENT)<<<<<
============================================================================
  ELEVATION DATA: UPSTREAM(FEET) =    906.00  DOWNSTREAM(FEET) =    878.00
  CHANNEL LENGTH THRU SUBAREA(FEET) =   199.20   CHANNEL SLOPE =  0.1406
  CHANNEL BASE(FEET) =    3.00   "Z" FACTOR =   2.000
  MANNING'S FACTOR = 0.030   MAXIMUM DEPTH(FEET) =  10.00
   100 YEAR RAINFALL INTENSITY(INCH/HOUR) =  5.987
  *USER SPECIFIED(SUBAREA):
  NATURAL DESERT LANDSCAPING RUNOFF COEFFICIENT = .3500
  S.C.S. CURVE NUMBER (AMC II) =  85
  TRAVEL TIME COMPUTED USING ESTIMATED FLOW(CFS) =      12.56
  TRAVEL TIME THRU SUBAREA BASED ON VELOCITY(FEET/SEC.) =   8.47
  AVERAGE FLOW DEPTH(FEET) =   0.39   TRAVEL TIME(MIN.) =   0.39
  Tc(MIN.) =    8.50
  SUBAREA AREA(ACRES) =     1.00       SUBAREA RUNOFF(CFS) =    2.10
  AREA-AVERAGE RUNOFF COEFFICIENT =  0.350
  TOTAL AREA(ACRES) =        6.8         PEAK FLOW RATE(CFS) =      14.33

  END OF SUBAREA CHANNEL FLOW HYDRAULICS:
  DEPTH(FEET) =  0.42   FLOW VELOCITY(FEET/SEC.) =   8.82
  LONGEST FLOWPATH FROM NODE    204.00 TO NODE    208.00 =    1113.30 FEET.

****************************************************************************
  FLOW PROCESS FROM NODE    208.00 TO NODE    209.00 IS CODE =  51
----------------------------------------------------------------------------
  >>>>>COMPUTE TRAPEZOIDAL CHANNEL FLOW<<<<<
  >>>>>TRAVELTIME THRU SUBAREA (EXISTING ELEMENT)<<<<<
============================================================================
  ELEVATION DATA: UPSTREAM(FEET) =    878.00  DOWNSTREAM(FEET) =    844.00
  CHANNEL LENGTH THRU SUBAREA(FEET) =   316.60   CHANNEL SLOPE =  0.1074
  CHANNEL BASE(FEET) =    3.00   "Z" FACTOR =   2.000
  MANNING'S FACTOR = 0.030   MAXIMUM DEPTH(FEET) =  10.00
   100 YEAR RAINFALL INTENSITY(INCH/HOUR) =  5.725
  *USER SPECIFIED(SUBAREA):
  NATURAL DESERT LANDSCAPING RUNOFF COEFFICIENT = .3500
  S.C.S. CURVE NUMBER (AMC II) =  85
  TRAVEL TIME COMPUTED USING ESTIMATED FLOW(CFS) =      17.29
  TRAVEL TIME THRU SUBAREA BASED ON VELOCITY(FEET/SEC.) =   8.63
  AVERAGE FLOW DEPTH(FEET) =   0.50   TRAVEL TIME(MIN.) =   0.61
  Tc(MIN.) =    9.11
  SUBAREA AREA(ACRES) =     2.95       SUBAREA RUNOFF(CFS) =    5.91
  AREA-AVERAGE RUNOFF COEFFICIENT =  0.350
  TOTAL AREA(ACRES) =        9.8         PEAK FLOW RATE(CFS) =      19.62

  END OF SUBAREA CHANNEL FLOW HYDRAULICS:
  DEPTH(FEET) =  0.54   FLOW VELOCITY(FEET/SEC.) =   8.93
  LONGEST FLOWPATH FROM NODE    204.00 TO NODE    209.00 =    1429.90 FEET.
```

```
****************************************************************************
  FLOW PROCESS FROM NODE    209.00 TO NODE    210.00 IS CODE =  51
----------------------------------------------------------------------------
  >>>>>COMPUTE TRAPEZOIDAL CHANNEL FLOW<<<<<
  >>>>>TRAVELTIME THRU SUBAREA (EXISTING ELEMENT)<<<<<
============================================================================
  ELEVATION DATA: UPSTREAM(FEET) =    844.00  DOWNSTREAM(FEET) =    804.00
  CHANNEL LENGTH THRU SUBAREA(FEET) =   297.30   CHANNEL SLOPE =  0.1345
  CHANNEL BASE(FEET) =    3.00   "Z" FACTOR =   2.000
  MANNING'S FACTOR = 0.030   MAXIMUM DEPTH(FEET) =  10.00
   100 YEAR RAINFALL INTENSITY(INCH/HOUR) =  5.532
  *USER SPECIFIED(SUBAREA):
  NATURAL DESERT LANDSCAPING RUNOFF COEFFICIENT = .3500
  S.C.S. CURVE NUMBER (AMC II) =  85
  TRAVEL TIME COMPUTED USING ESTIMATED FLOW(CFS) =      21.90
  TRAVEL TIME THRU SUBAREA BASED ON VELOCITY(FEET/SEC.) =   9.97
  AVERAGE FLOW DEPTH(FEET) =   0.54   TRAVEL TIME(MIN.) =   0.50
  Tc(MIN.) =    9.61
  SUBAREA AREA(ACRES) =     2.36       SUBAREA RUNOFF(CFS) =    4.57
  AREA-AVERAGE RUNOFF COEFFICIENT =  0.350
  TOTAL AREA(ACRES) =       12.1         PEAK FLOW RATE(CFS) =      23.53

  END OF SUBAREA CHANNEL FLOW HYDRAULICS:
  DEPTH(FEET) =  0.56   FLOW VELOCITY(FEET/SEC.) =  10.20
  LONGEST FLOWPATH FROM NODE    204.00 TO NODE    210.00 =    1727.20 FEET.

****************************************************************************
  FLOW PROCESS FROM NODE    210.00 TO NODE    211.00 IS CODE =  51
----------------------------------------------------------------------------
  >>>>>COMPUTE TRAPEZOIDAL CHANNEL FLOW<<<<<
  >>>>>TRAVELTIME THRU SUBAREA (EXISTING ELEMENT)<<<<<
============================================================================
  ELEVATION DATA: UPSTREAM(FEET) =    804.00  DOWNSTREAM(FEET) =    762.00
  CHANNEL LENGTH THRU SUBAREA(FEET) =   252.00   CHANNEL SLOPE =  0.1667
  CHANNEL BASE(FEET) =    3.00   "Z" FACTOR =   2.000
  MANNING'S FACTOR = 0.030   MAXIMUM DEPTH(FEET) =  10.00
   100 YEAR RAINFALL INTENSITY(INCH/HOUR) =  5.399
  *USER SPECIFIED(SUBAREA):
  NATURAL DESERT LANDSCAPING RUNOFF COEFFICIENT = .3500
  S.C.S. CURVE NUMBER (AMC II) =  85
  TRAVEL TIME COMPUTED USING ESTIMATED FLOW(CFS) =      25.78
  TRAVEL TIME THRU SUBAREA BASED ON VELOCITY(FEET/SEC.) =  11.33
  AVERAGE FLOW DEPTH(FEET) =   0.55   TRAVEL TIME(MIN.) =   0.37
  Tc(MIN.) =    9.98
  SUBAREA AREA(ACRES) =     2.39       SUBAREA RUNOFF(CFS) =    4.52
  AREA-AVERAGE RUNOFF COEFFICIENT =  0.350
  TOTAL AREA(ACRES) =       14.5         PEAK FLOW RATE(CFS) =      27.47

  END OF SUBAREA CHANNEL FLOW HYDRAULICS:
  DEPTH(FEET) =  0.58   FLOW VELOCITY(FEET/SEC.) =  11.51
  LONGEST FLOWPATH FROM NODE    204.00 TO NODE    211.00 =    1979.20 FEET.

****************************************************************************
  FLOW PROCESS FROM NODE    211.00 TO NODE    211.00 IS CODE =  10
----------------------------------------------------------------------------
  >>>>>MAIN-STREAM MEMORY COPIED ONTO MEMORY BANK # 1 <<<<<
============================================================================

****************************************************************************
  FLOW PROCESS FROM NODE    212.00 TO NODE    213.00 IS CODE =  21
----------------------------------------------------------------------------
  >>>>>RATIONAL METHOD INITIAL SUBAREA ANALYSIS<<<<<
============================================================================
```

```
  *USER SPECIFIED(SUBAREA):
  NATURAL DESERT LANDSCAPING RUNOFF COEFFICIENT = .3500
  S.C.S. CURVE NUMBER (AMC II) =  85
  INITIAL SUBAREA FLOW-LENGTH(FEET) =   143.50
  UPSTREAM ELEVATION(FEET) =    943.00
  DOWNSTREAM ELEVATION(FEET) =    929.00
  ELEVATION DIFFERENCE(FEET) =     14.00
  SUBAREA OVERLAND TIME OF FLOW(MIN.) =    6.318
  WARNING: INITIAL SUBAREA FLOW PATH LENGTH IS GREATER THAN
           THE MAXIMUM OVERLAND FLOW LENGTH =   100.00
           (Reference: Table 3-1B of Hydrology Manual)
           THE MAXIMUM OVERLAND FLOW LENGTH IS USED IN Tc CALCULATION!
   100 YEAR RAINFALL INTENSITY(INCH/HOUR) =  7.250
  SUBAREA RUNOFF(CFS) =      0.25
  TOTAL AREA(ACRES) =      0.10   TOTAL RUNOFF(CFS) =      0.25

****************************************************************************
  FLOW PROCESS FROM NODE    213.00 TO NODE    214.00 IS CODE =  51
----------------------------------------------------------------------------
  >>>>>COMPUTE TRAPEZOIDAL CHANNEL FLOW<<<<<
  >>>>>TRAVELTIME THRU SUBAREA (EXISTING ELEMENT)<<<<<
============================================================================
  ELEVATION DATA: UPSTREAM(FEET) =    929.00  DOWNSTREAM(FEET) =    913.00
  CHANNEL LENGTH THRU SUBAREA(FEET) =   156.60   CHANNEL SLOPE =  0.1022
  CHANNEL BASE(FEET) =    3.00   "Z" FACTOR =   2.000
  MANNING'S FACTOR = 0.030   MAXIMUM DEPTH(FEET) =  10.00
   100 YEAR RAINFALL INTENSITY(INCH/HOUR) =  6.621
  *USER SPECIFIED(SUBAREA):
  NATURAL DESERT LANDSCAPING RUNOFF COEFFICIENT = .3500
  S.C.S. CURVE NUMBER (AMC II) =  85
  TRAVEL TIME COMPUTED USING ESTIMATED FLOW(CFS) =       0.68
  TRAVEL TIME THRU SUBAREA BASED ON VELOCITY(FEET/SEC.) =   2.73
  AVERAGE FLOW DEPTH(FEET) =   0.08   TRAVEL TIME(MIN.) =   0.95
  Tc(MIN.) =    7.27
  SUBAREA AREA(ACRES) =     0.37       SUBAREA RUNOFF(CFS) =    0.86
  AREA-AVERAGE RUNOFF COEFFICIENT =  0.350
  TOTAL AREA(ACRES) =        0.5         PEAK FLOW RATE(CFS) =       1.09

  END OF SUBAREA CHANNEL FLOW HYDRAULICS:
  DEPTH(FEET) =  0.10   FLOW VELOCITY(FEET/SEC.) =   3.33
  LONGEST FLOWPATH FROM NODE    212.00 TO NODE    214.00 =     300.10 FEET.

****************************************************************************
  FLOW PROCESS FROM NODE    214.00 TO NODE    215.00 IS CODE =  51
----------------------------------------------------------------------------
  >>>>>COMPUTE TRAPEZOIDAL CHANNEL FLOW<<<<<
  >>>>>TRAVELTIME THRU SUBAREA (EXISTING ELEMENT)<<<<<
============================================================================
  ELEVATION DATA: UPSTREAM(FEET) =    913.00  DOWNSTREAM(FEET) =    856.00
  CHANNEL LENGTH THRU SUBAREA(FEET) =   293.30   CHANNEL SLOPE =  0.1943
  CHANNEL BASE(FEET) =    3.00   "Z" FACTOR =   2.000
  MANNING'S FACTOR = 0.030   MAXIMUM DEPTH(FEET) =  10.00
   100 YEAR RAINFALL INTENSITY(INCH/HOUR) =  6.100
  *USER SPECIFIED(SUBAREA):
  NATURAL DESERT LANDSCAPING RUNOFF COEFFICIENT = .3500
  S.C.S. CURVE NUMBER (AMC II) =  85
  TRAVEL TIME COMPUTED USING ESTIMATED FLOW(CFS) =       1.91
  TRAVEL TIME THRU SUBAREA BASED ON VELOCITY(FEET/SEC.) =   4.96
  AVERAGE FLOW DEPTH(FEET) =   0.12   TRAVEL TIME(MIN.) =   0.99
  Tc(MIN.) =    8.26
  SUBAREA AREA(ACRES) =     0.77       SUBAREA RUNOFF(CFS) =    1.64
  AREA-AVERAGE RUNOFF COEFFICIENT =  0.350
  TOTAL AREA(ACRES) =        1.2         PEAK FLOW RATE(CFS) =       2.65
```

```
  END OF SUBAREA CHANNEL FLOW HYDRAULICS:
  DEPTH(FEET) =  0.14   FLOW VELOCITY(FEET/SEC.) =   5.67
  LONGEST FLOWPATH FROM NODE    212.00 TO NODE    215.00 =     593.40 FEET.

****************************************************************************
  FLOW PROCESS FROM NODE    215.00 TO NODE    216.00 IS CODE =  51
----------------------------------------------------------------------------
  >>>>>COMPUTE TRAPEZOIDAL CHANNEL FLOW<<<<<
  >>>>>TRAVELTIME THRU SUBAREA (EXISTING ELEMENT)<<<<<
============================================================================
  ELEVATION DATA: UPSTREAM(FEET) =    856.00  DOWNSTREAM(FEET) =    842.00
  CHANNEL LENGTH THRU SUBAREA(FEET) =   145.30   CHANNEL SLOPE =  0.0964
  CHANNEL BASE(FEET) =    3.00   "Z" FACTOR =   2.000
  MANNING'S FACTOR = 0.030   MAXIMUM DEPTH(FEET) =  10.00
   100 YEAR RAINFALL INTENSITY(INCH/HOUR) =  5.885
  *USER SPECIFIED(SUBAREA):
  NATURAL DESERT LANDSCAPING RUNOFF COEFFICIENT = .3500
  S.C.S. CURVE NUMBER (AMC II) =  85
  TRAVEL TIME COMPUTED USING ESTIMATED FLOW(CFS) =       4.01
  TRAVEL TIME THRU SUBAREA BASED ON VELOCITY(FEET/SEC.) =   5.14
  AVERAGE FLOW DEPTH(FEET) =   0.23   TRAVEL TIME(MIN.) =   0.47
  Tc(MIN.) =    8.73
  SUBAREA AREA(ACRES) =     1.32       SUBAREA RUNOFF(CFS) =    2.72
  AREA-AVERAGE RUNOFF COEFFICIENT =  0.350
  TOTAL AREA(ACRES) =        2.6         PEAK FLOW RATE(CFS) =       5.27

  END OF SUBAREA CHANNEL FLOW HYDRAULICS:
  DEPTH(FEET) =  0.26   FLOW VELOCITY(FEET/SEC.) =   5.66
  LONGEST FLOWPATH FROM NODE    212.00 TO NODE    216.00 =     738.70 FEET.

****************************************************************************
  FLOW PROCESS FROM NODE    216.00 TO NODE    217.00 IS CODE =  51
----------------------------------------------------------------------------
  >>>>>COMPUTE TRAPEZOIDAL CHANNEL FLOW<<<<<
  >>>>>TRAVELTIME THRU SUBAREA (EXISTING ELEMENT)<<<<<
============================================================================
  ELEVATION DATA: UPSTREAM(FEET) =    842.00  DOWNSTREAM(FEET) =    832.00
  CHANNEL LENGTH THRU SUBAREA(FEET) =   165.20   CHANNEL SLOPE =  0.0605
  CHANNEL BASE(FEET) =    3.00   "Z" FACTOR =   2.000
  MANNING'S FACTOR = 0.030   MAXIMUM DEPTH(FEET) =  10.00
   100 YEAR RAINFALL INTENSITY(INCH/HOUR) =  5.677
  *USER SPECIFIED(SUBAREA):
  NATURAL DESERT LANDSCAPING RUNOFF COEFFICIENT = .3500
  S.C.S. CURVE NUMBER (AMC II) =  85
  TRAVEL TIME COMPUTED USING ESTIMATED FLOW(CFS) =       7.84
  TRAVEL TIME THRU SUBAREA BASED ON VELOCITY(FEET/SEC.) =   5.51
  AVERAGE FLOW DEPTH(FEET) =   0.38   TRAVEL TIME(MIN.) =   0.50
  Tc(MIN.) =    9.23
  SUBAREA AREA(ACRES) =     2.58       SUBAREA RUNOFF(CFS) =    5.13
  AREA-AVERAGE RUNOFF COEFFICIENT =  0.350
  TOTAL AREA(ACRES) =        5.1         PEAK FLOW RATE(CFS) =      10.21

  END OF SUBAREA CHANNEL FLOW HYDRAULICS:
  DEPTH(FEET) =  0.44   FLOW VELOCITY(FEET/SEC.) =   5.99
  LONGEST FLOWPATH FROM NODE    212.00 TO NODE    217.00 =     903.90 FEET.

****************************************************************************
  FLOW PROCESS FROM NODE    217.00 TO NODE    218.00 IS CODE =  51
----------------------------------------------------------------------------
  >>>>>COMPUTE TRAPEZOIDAL CHANNEL FLOW<<<<<
  >>>>>TRAVELTIME THRU SUBAREA (EXISTING ELEMENT)<<<<<
============================================================================
```

```
  ELEVATION DATA: UPSTREAM(FEET) =    832.00  DOWNSTREAM(FEET) =    804.00
  CHANNEL LENGTH THRU SUBAREA(FEET) =   185.30   CHANNEL SLOPE =  0.1511
  CHANNEL BASE(FEET) =    3.00   "Z" FACTOR =   2.000
  MANNING'S FACTOR = 0.030   MAXIMUM DEPTH(FEET) =  10.00
   100 YEAR RAINFALL INTENSITY(INCH/HOUR) =  5.534
  *USER SPECIFIED(SUBAREA):
  NATURAL DESERT LANDSCAPING RUNOFF COEFFICIENT = .3500
  S.C.S. CURVE NUMBER (AMC II) =  85
  TRAVEL TIME COMPUTED USING ESTIMATED FLOW(CFS) =      10.86
  TRAVEL TIME THRU SUBAREA BASED ON VELOCITY(FEET/SEC.) =   8.28
  AVERAGE FLOW DEPTH(FEET) =   0.35   TRAVEL TIME(MIN.) =   0.37
  Tc(MIN.) =    9.60
  SUBAREA AREA(ACRES) =     0.67       SUBAREA RUNOFF(CFS) =    1.30
  AREA-AVERAGE RUNOFF COEFFICIENT =  0.350
  TOTAL AREA(ACRES) =        5.8         PEAK FLOW RATE(CFS) =      11.25

  END OF SUBAREA CHANNEL FLOW HYDRAULICS:
  DEPTH(FEET) =  0.36   FLOW VELOCITY(FEET/SEC.) =   8.36
  LONGEST FLOWPATH FROM NODE    212.00 TO NODE    218.00 =    1089.20 FEET.

****************************************************************************
  FLOW PROCESS FROM NODE    218.00 TO NODE    218.00 IS CODE =   1
----------------------------------------------------------------------------
  >>>>>DESIGNATE INDEPENDENT STREAM FOR CONFLUENCE<<<<<
============================================================================
  TOTAL NUMBER OF STREAMS =  2
  CONFLUENCE VALUES USED FOR INDEPENDENT STREAM  1 ARE:
  TIME OF CONCENTRATION(MIN.) =    9.60
  RAINFALL INTENSITY(INCH/HR) =   5.53
  TOTAL STREAM AREA(ACRES) =     5.81
  PEAK FLOW RATE(CFS) AT CONFLUENCE =     11.25

****************************************************************************
  FLOW PROCESS FROM NODE    219.00 TO NODE    220.00 IS CODE =  21
----------------------------------------------------------------------------
  >>>>>RATIONAL METHOD INITIAL SUBAREA ANALYSIS<<<<<
============================================================================
  *USER SPECIFIED(SUBAREA):
  NATURAL DESERT LANDSCAPING RUNOFF COEFFICIENT = .3500
  S.C.S. CURVE NUMBER (AMC II) =  85
  INITIAL SUBAREA FLOW-LENGTH(FEET) =   114.20
  UPSTREAM ELEVATION(FEET) =    914.00
  DOWNSTREAM ELEVATION(FEET) =    899.00
  ELEVATION DIFFERENCE(FEET) =     15.00
  SUBAREA OVERLAND TIME OF FLOW(MIN.) =    6.267
  WARNING: INITIAL SUBAREA FLOW PATH LENGTH IS GREATER THAN
           THE MAXIMUM OVERLAND FLOW LENGTH =   100.00
           (Reference: Table 3-1B of Hydrology Manual)
           THE MAXIMUM OVERLAND FLOW LENGTH IS USED IN Tc CALCULATION!
   100 YEAR RAINFALL INTENSITY(INCH/HOUR) =  7.288
  SUBAREA RUNOFF(CFS) =      0.26
  TOTAL AREA(ACRES) =      0.10   TOTAL RUNOFF(CFS) =      0.26

****************************************************************************
  FLOW PROCESS FROM NODE    220.00 TO NODE    221.00 IS CODE =  51
----------------------------------------------------------------------------
  >>>>>COMPUTE TRAPEZOIDAL CHANNEL FLOW<<<<<
  >>>>>TRAVELTIME THRU SUBAREA (EXISTING ELEMENT)<<<<<
============================================================================
  ELEVATION DATA: UPSTREAM(FEET) =    899.00  DOWNSTREAM(FEET) =    813.00
  CHANNEL LENGTH THRU SUBAREA(FEET) =   312.10   CHANNEL SLOPE =  0.2756
  CHANNEL BASE(FEET) =    3.00   "Z" FACTOR =   2.000
  MANNING'S FACTOR = 0.030   MAXIMUM DEPTH(FEET) =  10.00
```

```
 100 YEAR RAINFALL INTENSITY(INCH/HOUR) =  6.621
*USER SPECIFIED(SUBAREA):
NATURAL DESERT LANDSCAPING RUNOFF COEFFICIENT = .3500
S.C.S. CURVE NUMBER (AMC II) =  85
TRAVEL TIME COMPUTED USING ESTIMATED FLOW(CFS) =       1.59
TRAVEL TIME THRU SUBAREA BASED ON VELOCITY(FEET/SEC.) =   5.17
AVERAGE FLOW DEPTH(FEET) =   0.10   TRAVEL TIME(MIN.) =   1.01
Tc(MIN.) =    7.27
SUBAREA AREA(ACRES) =     1.15       SUBAREA RUNOFF(CFS) =    2.66
AREA-AVERAGE RUNOFF COEFFICIENT =  0.350
TOTAL AREA(ACRES) =        1.2         PEAK FLOW RATE(CFS) =       2.90

END OF SUBAREA CHANNEL FLOW HYDRAULICS:
DEPTH(FEET) =  0.13   FLOW VELOCITY(FEET/SEC.) =   6.59
LONGEST FLOWPATH FROM NODE    219.00 TO NODE    221.00 =     426.30 FEET.

****************************************************************************
FLOW PROCESS FROM NODE    221.00 TO NODE    218.00 IS CODE =  51
----------------------------------------------------------------------------
>>>>>COMPUTE TRAPEZOIDAL CHANNEL FLOW<<<<<
>>>>>TRAVELTIME THRU SUBAREA (EXISTING ELEMENT)<<<<<
============================================================================
ELEVATION DATA: UPSTREAM(FEET) =    813.00  DOWNSTREAM(FEET) =    804.00
CHANNEL LENGTH THRU SUBAREA(FEET) =    71.20   CHANNEL SLOPE =  0.1264
CHANNEL BASE(FEET) =    3.00   "Z" FACTOR =   2.000
MANNING'S FACTOR = 0.030   MAXIMUM DEPTH(FEET) =  10.00
 100 YEAR RAINFALL INTENSITY(INCH/HOUR) =  6.494
*USER SPECIFIED(SUBAREA):
NATURAL DESERT LANDSCAPING RUNOFF COEFFICIENT = .3500
S.C.S. CURVE NUMBER (AMC II) =  85
TRAVEL TIME COMPUTED USING ESTIMATED FLOW(CFS) =       3.52
TRAVEL TIME THRU SUBAREA BASED ON VELOCITY(FEET/SEC.) =   5.37
AVERAGE FLOW DEPTH(FEET) =   0.19   TRAVEL TIME(MIN.) =   0.22
Tc(MIN.) =    7.49
SUBAREA AREA(ACRES) =     0.55       SUBAREA RUNOFF(CFS) =    1.25
AREA-AVERAGE RUNOFF COEFFICIENT =  0.350
TOTAL AREA(ACRES) =        1.8         PEAK FLOW RATE(CFS) =       4.09

END OF SUBAREA CHANNEL FLOW HYDRAULICS:
DEPTH(FEET) =  0.21   FLOW VELOCITY(FEET/SEC.) =   5.67
LONGEST FLOWPATH FROM NODE    219.00 TO NODE    218.00 =     497.50 FEET.

****************************************************************************
FLOW PROCESS FROM NODE    218.00 TO NODE    218.00 IS CODE =   1
----------------------------------------------------------------------------
>>>>>DESIGNATE INDEPENDENT STREAM FOR CONFLUENCE<<<<<
>>>>>AND COMPUTE VARIOUS CONFLUENCED STREAM VALUES<<<<<
============================================================================
TOTAL NUMBER OF STREAMS =  2
CONFLUENCE VALUES USED FOR INDEPENDENT STREAM  2 ARE:
TIME OF CONCENTRATION(MIN.) =    7.49
RAINFALL INTENSITY(INCH/HR) =   6.49
TOTAL STREAM AREA(ACRES) =     1.80
PEAK FLOW RATE(CFS) AT CONFLUENCE =      4.09

** CONFLUENCE DATA **
STREAM     RUNOFF       Tc      INTENSITY      AREA
NUMBER      (CFS)     (MIN.)   (INCH/HOUR)    (ACRE)
    1       11.25     9.60        5.534          5.81
    2        4.09     7.49        6.494          1.80

RAINFALL INTENSITY AND TIME OF CONCENTRATION RATIO
CONFLUENCE FORMULA USED FOR  2 STREAMS.
```

```
  ** PEAK FLOW RATE TABLE **
  STREAM     RUNOFF      Tc      INTENSITY
  NUMBER      (CFS)    (MIN.)   (INCH/HOUR)
      1       12.87     7.49       6.494
      2       14.74     9.60       5.534

  COMPUTED CONFLUENCE ESTIMATES ARE AS FOLLOWS:
  PEAK FLOW RATE(CFS) =      14.74   Tc(MIN.) =    9.60
  TOTAL AREA(ACRES) =        7.6
  LONGEST FLOWPATH FROM NODE    212.00 TO NODE    218.00 =    1089.20 FEET.

****************************************************************************
  FLOW PROCESS FROM NODE    218.00 TO NODE    222.00 IS CODE =  51
----------------------------------------------------------------------------
  >>>>>COMPUTE TRAPEZOIDAL CHANNEL FLOW<<<<<
  >>>>>TRAVELTIME THRU SUBAREA (EXISTING ELEMENT)<<<<<
============================================================================
  ELEVATION DATA: UPSTREAM(FEET) =    804.00  DOWNSTREAM(FEET) =    792.00
  CHANNEL LENGTH THRU SUBAREA(FEET) =    76.40   CHANNEL SLOPE =  0.1571
  CHANNEL BASE(FEET) =    3.00   "Z" FACTOR =   2.000
  MANNING'S FACTOR = 0.030   MAXIMUM DEPTH(FEET) =  10.00
   100 YEAR RAINFALL INTENSITY(INCH/HOUR) =  5.484
  *USER SPECIFIED(SUBAREA):
  NATURAL DESERT LANDSCAPING RUNOFF COEFFICIENT = .3500
  S.C.S. CURVE NUMBER (AMC II) =  85
  TRAVEL TIME COMPUTED USING ESTIMATED FLOW(CFS) =      15.14
  TRAVEL TIME THRU SUBAREA BASED ON VELOCITY(FEET/SEC.) =   9.32
  AVERAGE FLOW DEPTH(FEET) =   0.42   TRAVEL TIME(MIN.) =   0.14
  Tc(MIN.) =    9.74
  SUBAREA AREA(ACRES) =     0.42       SUBAREA RUNOFF(CFS) =    0.81
  AREA-AVERAGE RUNOFF COEFFICIENT =  0.350
  TOTAL AREA(ACRES) =        8.0         PEAK FLOW RATE(CFS) =      15.41

  END OF SUBAREA CHANNEL FLOW HYDRAULICS:
  DEPTH(FEET) =  0.42   FLOW VELOCITY(FEET/SEC.) =   9.44
  LONGEST FLOWPATH FROM NODE    212.00 TO NODE    222.00 =    1165.60 FEET.

****************************************************************************
  FLOW PROCESS FROM NODE    222.00 TO NODE    211.00 IS CODE =  51
----------------------------------------------------------------------------
  >>>>>COMPUTE TRAPEZOIDAL CHANNEL FLOW<<<<<
  >>>>>TRAVELTIME THRU SUBAREA (EXISTING ELEMENT)<<<<<
============================================================================
  ELEVATION DATA: UPSTREAM(FEET) =    792.00  DOWNSTREAM(FEET) =    762.00
  CHANNEL LENGTH THRU SUBAREA(FEET) =   237.80   CHANNEL SLOPE =  0.1262
  CHANNEL BASE(FEET) =    3.00   "Z" FACTOR =   2.000
  MANNING'S FACTOR = 0.030   MAXIMUM DEPTH(FEET) =  10.00
   100 YEAR RAINFALL INTENSITY(INCH/HOUR) =  5.331
  *USER SPECIFIED(SUBAREA):
  NATURAL DESERT LANDSCAPING RUNOFF COEFFICIENT = .3500
  S.C.S. CURVE NUMBER (AMC II) =  85
  TRAVEL TIME COMPUTED USING ESTIMATED FLOW(CFS) =      17.19
  TRAVEL TIME THRU SUBAREA BASED ON VELOCITY(FEET/SEC.) =   9.10
  AVERAGE FLOW DEPTH(FEET) =   0.48   TRAVEL TIME(MIN.) =   0.44
  Tc(MIN.) =   10.18
  SUBAREA AREA(ACRES) =     1.91       SUBAREA RUNOFF(CFS) =    3.56
  AREA-AVERAGE RUNOFF COEFFICIENT =  0.350
  TOTAL AREA(ACRES) =        9.9         PEAK FLOW RATE(CFS) =      18.55

  END OF SUBAREA CHANNEL FLOW HYDRAULICS:
  DEPTH(FEET) =  0.50   FLOW VELOCITY(FEET/SEC.) =   9.26
  LONGEST FLOWPATH FROM NODE    212.00 TO NODE    211.00 =    1403.40 FEET.
```

```
****************************************************************************
  FLOW PROCESS FROM NODE    211.00 TO NODE    211.00 IS CODE =  11
----------------------------------------------------------------------------
  >>>>>CONFLUENCE MEMORY BANK # 1 WITH THE MAIN-STREAM MEMORY<<<<<
============================================================================

  ** MAIN STREAM CONFLUENCE DATA **
  STREAM     RUNOFF      Tc      INTENSITY     AREA
  NUMBER      (CFS)    (MIN.)   (INCH/HOUR)   (ACRE)
      1       18.55    10.18       5.331        9.94
  LONGEST FLOWPATH FROM NODE    212.00 TO NODE    211.00 =    1403.40 FEET.

  ** MEMORY BANK #  1 CONFLUENCE DATA **
  STREAM     RUNOFF      Tc      INTENSITY     AREA
  NUMBER      (CFS)    (MIN.)   (INCH/HOUR)   (ACRE)
      1       27.47     9.98       5.399       14.54
  LONGEST FLOWPATH FROM NODE    204.00 TO NODE    211.00 =    1979.20 FEET.

  ** PEAK FLOW RATE TABLE **
  STREAM    RUNOFF       Tc      INTENSITY
  NUMBER     (CFS)     (MIN.)   (INCH/HOUR)
      1      45.66       9.98        5.399
      2      45.68      10.18        5.331

  COMPUTED CONFLUENCE ESTIMATES ARE AS FOLLOWS:
  PEAK FLOW RATE(CFS) =      45.68   Tc(MIN.) =   10.18
  TOTAL AREA(ACRES) =       24.5

****************************************************************************
  FLOW PROCESS FROM NODE    211.00 TO NODE    211.00 IS CODE =  12
----------------------------------------------------------------------------
  >>>>>CLEAR MEMORY BANK # 1 <<<<<
============================================================================

****************************************************************************
  FLOW PROCESS FROM NODE    211.00 TO NODE    223.00 IS CODE =  51
----------------------------------------------------------------------------
  >>>>>COMPUTE TRAPEZOIDAL CHANNEL FLOW<<<<<
  >>>>>TRAVELTIME THRU SUBAREA (EXISTING ELEMENT)<<<<<
============================================================================
  ELEVATION DATA: UPSTREAM(FEET) =    762.00  DOWNSTREAM(FEET) =    759.00
  CHANNEL LENGTH THRU SUBAREA(FEET) =    77.30   CHANNEL SLOPE =  0.0388
  CHANNEL BASE(FEET) =    3.00   "Z" FACTOR =   2.000
  MANNING'S FACTOR = 0.030   MAXIMUM DEPTH(FEET) =  10.00
   100 YEAR RAINFALL INTENSITY(INCH/HOUR) =  5.277
  *USER SPECIFIED(SUBAREA):
  NATURAL DESERT LANDSCAPING RUNOFF COEFFICIENT = .3500
  S.C.S. CURVE NUMBER (AMC II) =  85
  TRAVEL TIME COMPUTED USING ESTIMATED FLOW(CFS) =      45.98
  TRAVEL TIME THRU SUBAREA BASED ON VELOCITY(FEET/SEC.) =   7.93
  AVERAGE FLOW DEPTH(FEET) =   1.11   TRAVEL TIME(MIN.) =   0.16
  Tc(MIN.) =   10.34
  SUBAREA AREA(ACRES) =     0.33       SUBAREA RUNOFF(CFS) =    0.61
  AREA-AVERAGE RUNOFF COEFFICIENT =  0.350
  TOTAL AREA(ACRES) =       24.8         PEAK FLOW RATE(CFS) =      45.82

  END OF SUBAREA CHANNEL FLOW HYDRAULICS:
  DEPTH(FEET) =  1.11   FLOW VELOCITY(FEET/SEC.) =   7.90
  LONGEST FLOWPATH FROM NODE    204.00 TO NODE    223.00 =    2056.50 FEET.

****************************************************************************
  FLOW PROCESS FROM NODE    223.00 TO NODE    224.00 IS CODE =  51
```

```
----------------------------------------------------------------------------
  >>>>>COMPUTE TRAPEZOIDAL CHANNEL FLOW<<<<<
  >>>>>TRAVELTIME THRU SUBAREA (EXISTING ELEMENT)<<<<<
============================================================================
  ELEVATION DATA: UPSTREAM(FEET) =    759.00  DOWNSTREAM(FEET) =    750.00
  CHANNEL LENGTH THRU SUBAREA(FEET) =   131.50   CHANNEL SLOPE =  0.0684
  CHANNEL BASE(FEET) =    3.00   "Z" FACTOR =   2.000
  MANNING'S FACTOR = 0.030   MAXIMUM DEPTH(FEET) =  10.00
   100 YEAR RAINFALL INTENSITY(INCH/HOUR) =  5.204
  *USER SPECIFIED(SUBAREA):
  NATURAL DESERT LANDSCAPING RUNOFF COEFFICIENT = .3500
  S.C.S. CURVE NUMBER (AMC II) =  85
  TRAVEL TIME COMPUTED USING ESTIMATED FLOW(CFS) =      46.71
  TRAVEL TIME THRU SUBAREA BASED ON VELOCITY(FEET/SEC.) =   9.72
  AVERAGE FLOW DEPTH(FEET) =   0.97   TRAVEL TIME(MIN.) =   0.23
  Tc(MIN.) =   10.56
  SUBAREA AREA(ACRES) =     0.97       SUBAREA RUNOFF(CFS) =    1.77
  AREA-AVERAGE RUNOFF COEFFICIENT =  0.350
  TOTAL AREA(ACRES) =       25.8         PEAK FLOW RATE(CFS) =      46.96

  END OF SUBAREA CHANNEL FLOW HYDRAULICS:
  DEPTH(FEET) =  0.97   FLOW VELOCITY(FEET/SEC.) =   9.77
  LONGEST FLOWPATH FROM NODE    204.00 TO NODE    224.00 =    2188.00 FEET.

****************************************************************************
  FLOW PROCESS FROM NODE    224.00 TO NODE    225.00 IS CODE =  51
----------------------------------------------------------------------------
  >>>>>COMPUTE TRAPEZOIDAL CHANNEL FLOW<<<<<
  >>>>>TRAVELTIME THRU SUBAREA (EXISTING ELEMENT)<<<<<
============================================================================
  ELEVATION DATA: UPSTREAM(FEET) =    750.00  DOWNSTREAM(FEET) =    742.00
  CHANNEL LENGTH THRU SUBAREA(FEET) =   125.10   CHANNEL SLOPE =  0.0639
  CHANNEL BASE(FEET) =    3.00   "Z" FACTOR =   2.000
  MANNING'S FACTOR = 0.030   MAXIMUM DEPTH(FEET) =  10.00
   100 YEAR RAINFALL INTENSITY(INCH/HOUR) =  5.136
  *USER SPECIFIED(SUBAREA):
  NATURAL DESERT LANDSCAPING RUNOFF COEFFICIENT = .3500
  S.C.S. CURVE NUMBER (AMC II) =  85
  TRAVEL TIME COMPUTED USING ESTIMATED FLOW(CFS) =      47.06
  TRAVEL TIME THRU SUBAREA BASED ON VELOCITY(FEET/SEC.) =   9.56
  AVERAGE FLOW DEPTH(FEET) =   0.99   TRAVEL TIME(MIN.) =   0.22
  Tc(MIN.) =   10.78
  SUBAREA AREA(ACRES) =     0.11       SUBAREA RUNOFF(CFS) =    0.20
  AREA-AVERAGE RUNOFF COEFFICIENT =  0.350
  TOTAL AREA(ACRES) =       25.9         PEAK FLOW RATE(CFS) =      46.96

  END OF SUBAREA CHANNEL FLOW HYDRAULICS:
  DEPTH(FEET) =  0.99   FLOW VELOCITY(FEET/SEC.) =   9.54
  LONGEST FLOWPATH FROM NODE    204.00 TO NODE    225.00 =    2313.10 FEET.

****************************************************************************
  FLOW PROCESS FROM NODE    225.00 TO NODE    225.00 IS CODE =   1
----------------------------------------------------------------------------
  >>>>>DESIGNATE INDEPENDENT STREAM FOR CONFLUENCE<<<<<
============================================================================
  TOTAL NUMBER OF STREAMS =  3
  CONFLUENCE VALUES USED FOR INDEPENDENT STREAM  1 ARE:
  TIME OF CONCENTRATION(MIN.) =   10.78
  RAINFALL INTENSITY(INCH/HR) =   5.14
  TOTAL STREAM AREA(ACRES) =    25.89
  PEAK FLOW RATE(CFS) AT CONFLUENCE =     46.96

****************************************************************************
```

```
  FLOW PROCESS FROM NODE    226.00 TO NODE    227.00 IS CODE =  21
----------------------------------------------------------------------------
  >>>>>RATIONAL METHOD INITIAL SUBAREA ANALYSIS<<<<<
============================================================================
  *USER SPECIFIED(SUBAREA):
  NATURAL DESERT LANDSCAPING RUNOFF COEFFICIENT = .3500
  S.C.S. CURVE NUMBER (AMC II) =  85
  INITIAL SUBAREA FLOW-LENGTH(FEET) =   120.30
  UPSTREAM ELEVATION(FEET) =    854.00
  DOWNSTREAM ELEVATION(FEET) =    834.00
  ELEVATION DIFFERENCE(FEET) =     20.00
  SUBAREA OVERLAND TIME OF FLOW(MIN.) =    6.267
  WARNING: INITIAL SUBAREA FLOW PATH LENGTH IS GREATER THAN
           THE MAXIMUM OVERLAND FLOW LENGTH =   100.00
           (Reference: Table 3-1B of Hydrology Manual)
           THE MAXIMUM OVERLAND FLOW LENGTH IS USED IN Tc CALCULATION!
   100 YEAR RAINFALL INTENSITY(INCH/HOUR) =  7.288
  SUBAREA RUNOFF(CFS) =      0.26
  TOTAL AREA(ACRES) =      0.10   TOTAL RUNOFF(CFS) =      0.26

****************************************************************************
  FLOW PROCESS FROM NODE    227.00 TO NODE    228.00 IS CODE =  51
----------------------------------------------------------------------------
  >>>>>COMPUTE TRAPEZOIDAL CHANNEL FLOW<<<<<
  >>>>>TRAVELTIME THRU SUBAREA (EXISTING ELEMENT)<<<<<
============================================================================
  ELEVATION DATA: UPSTREAM(FEET) =    834.00  DOWNSTREAM(FEET) =    812.00
  CHANNEL LENGTH THRU SUBAREA(FEET) =   129.70   CHANNEL SLOPE =  0.1696
  CHANNEL BASE(FEET) =    3.00   "Z" FACTOR =   2.000
  MANNING'S FACTOR = 0.030   MAXIMUM DEPTH(FEET) =  10.00
   100 YEAR RAINFALL INTENSITY(INCH/HOUR) =  6.813
  *USER SPECIFIED(SUBAREA):
  NATURAL DESERT LANDSCAPING RUNOFF COEFFICIENT = .3500
  S.C.S. CURVE NUMBER (AMC II) =  85
  TRAVEL TIME COMPUTED USING ESTIMATED FLOW(CFS) =       0.62
  TRAVEL TIME THRU SUBAREA BASED ON VELOCITY(FEET/SEC.) =   3.13
  AVERAGE FLOW DEPTH(FEET) =   0.06   TRAVEL TIME(MIN.) =   0.69
  Tc(MIN.) =    6.96
  SUBAREA AREA(ACRES) =     0.31       SUBAREA RUNOFF(CFS) =    0.74
  AREA-AVERAGE RUNOFF COEFFICIENT =  0.350
  TOTAL AREA(ACRES) =        0.4         PEAK FLOW RATE(CFS) =       0.98

  END OF SUBAREA CHANNEL FLOW HYDRAULICS:
  DEPTH(FEET) =  0.08   FLOW VELOCITY(FEET/SEC.) =   3.81
  LONGEST FLOWPATH FROM NODE    226.00 TO NODE    228.00 =     250.00 FEET.

****************************************************************************
  FLOW PROCESS FROM NODE    228.00 TO NODE    225.00 IS CODE =  51
----------------------------------------------------------------------------
  >>>>>COMPUTE TRAPEZOIDAL CHANNEL FLOW<<<<<
  >>>>>TRAVELTIME THRU SUBAREA (EXISTING ELEMENT)<<<<<
============================================================================
  ELEVATION DATA: UPSTREAM(FEET) =    812.00  DOWNSTREAM(FEET) =    742.00
  CHANNEL LENGTH THRU SUBAREA(FEET) =   466.30   CHANNEL SLOPE =  0.1501
  CHANNEL BASE(FEET) =    3.00   "Z" FACTOR =   2.000
  MANNING'S FACTOR = 0.030   MAXIMUM DEPTH(FEET) =  10.00
   100 YEAR RAINFALL INTENSITY(INCH/HOUR) =  5.979
  *USER SPECIFIED(SUBAREA):
  NATURAL DESERT LANDSCAPING RUNOFF COEFFICIENT = .3500
  S.C.S. CURVE NUMBER (AMC II) =  85
  TRAVEL TIME COMPUTED USING ESTIMATED FLOW(CFS) =       2.43
  TRAVEL TIME THRU SUBAREA BASED ON VELOCITY(FEET/SEC.) =   4.98
  AVERAGE FLOW DEPTH(FEET) =   0.15   TRAVEL TIME(MIN.) =   1.56
```

```
  Tc(MIN.) =    8.52
  SUBAREA AREA(ACRES) =     1.38       SUBAREA RUNOFF(CFS) =    2.89
  AREA-AVERAGE RUNOFF COEFFICIENT =  0.350
  TOTAL AREA(ACRES) =        1.8         PEAK FLOW RATE(CFS) =       3.75

  END OF SUBAREA CHANNEL FLOW HYDRAULICS:
  DEPTH(FEET) =  0.19   FLOW VELOCITY(FEET/SEC.) =   5.91
  LONGEST FLOWPATH FROM NODE    226.00 TO NODE    225.00 =     716.30 FEET.

****************************************************************************
  FLOW PROCESS FROM NODE    225.00 TO NODE    225.00 IS CODE =   1
----------------------------------------------------------------------------
  >>>>>DESIGNATE INDEPENDENT STREAM FOR CONFLUENCE<<<<<
============================================================================
  TOTAL NUMBER OF STREAMS =  3
  CONFLUENCE VALUES USED FOR INDEPENDENT STREAM  2 ARE:
  TIME OF CONCENTRATION(MIN.) =    8.52
  RAINFALL INTENSITY(INCH/HR) =   5.98
  TOTAL STREAM AREA(ACRES) =     1.79
  PEAK FLOW RATE(CFS) AT CONFLUENCE =      3.75

****************************************************************************
  FLOW PROCESS FROM NODE    229.00 TO NODE    230.00 IS CODE =  21
----------------------------------------------------------------------------
  >>>>>RATIONAL METHOD INITIAL SUBAREA ANALYSIS<<<<<
============================================================================
  *USER SPECIFIED(SUBAREA):
  NATURAL DESERT LANDSCAPING RUNOFF COEFFICIENT = .3500
  S.C.S. CURVE NUMBER (AMC II) =  85
  INITIAL SUBAREA FLOW-LENGTH(FEET) =    79.00
  UPSTREAM ELEVATION(FEET) =    868.00
  DOWNSTREAM ELEVATION(FEET) =    856.00
  ELEVATION DIFFERENCE(FEET) =     12.00
  SUBAREA OVERLAND TIME OF FLOW(MIN.) =    5.570
  WARNING: THE MAXIMUM OVERLAND FLOW SLOPE, 10.%, IS USED IN Tc CALCULATION!
   100 YEAR RAINFALL INTENSITY(INCH/HOUR) =  7.864
  SUBAREA RUNOFF(CFS) =      0.36
  TOTAL AREA(ACRES) =      0.13   TOTAL RUNOFF(CFS) =      0.36

****************************************************************************
  FLOW PROCESS FROM NODE    230.00 TO NODE    231.00 IS CODE =  51
----------------------------------------------------------------------------
  >>>>>COMPUTE TRAPEZOIDAL CHANNEL FLOW<<<<<
  >>>>>TRAVELTIME THRU SUBAREA (EXISTING ELEMENT)<<<<<
============================================================================
  ELEVATION DATA: UPSTREAM(FEET) =    856.00  DOWNSTREAM(FEET) =    790.00
  CHANNEL LENGTH THRU SUBAREA(FEET) =   205.40   CHANNEL SLOPE =  0.3213
  CHANNEL BASE(FEET) =    3.00   "Z" FACTOR =   2.000
  MANNING'S FACTOR = 0.030   MAXIMUM DEPTH(FEET) =  10.00
   100 YEAR RAINFALL INTENSITY(INCH/HOUR) =  7.371
  *USER SPECIFIED(SUBAREA):
  NATURAL DESERT LANDSCAPING RUNOFF COEFFICIENT = .3500
  S.C.S. CURVE NUMBER (AMC II) =  85
  TRAVEL TIME COMPUTED USING ESTIMATED FLOW(CFS) =       1.79
  TRAVEL TIME THRU SUBAREA BASED ON VELOCITY(FEET/SEC.) =   5.82
  AVERAGE FLOW DEPTH(FEET) =   0.10   TRAVEL TIME(MIN.) =   0.59
  Tc(MIN.) =    6.16
  SUBAREA AREA(ACRES) =     1.11       SUBAREA RUNOFF(CFS) =    2.86
  AREA-AVERAGE RUNOFF COEFFICIENT =  0.350
  TOTAL AREA(ACRES) =        1.2         PEAK FLOW RATE(CFS) =       3.20

  END OF SUBAREA CHANNEL FLOW HYDRAULICS:
  DEPTH(FEET) =  0.14   FLOW VELOCITY(FEET/SEC.) =   6.96
```

```
  LONGEST FLOWPATH FROM NODE    229.00 TO NODE    231.00 =     284.40 FEET.

****************************************************************************
  FLOW PROCESS FROM NODE    231.00 TO NODE    232.00 IS CODE =  51
----------------------------------------------------------------------------
  >>>>>COMPUTE TRAPEZOIDAL CHANNEL FLOW<<<<<
  >>>>>TRAVELTIME THRU SUBAREA (EXISTING ELEMENT)<<<<<
============================================================================
  ELEVATION DATA: UPSTREAM(FEET) =    790.00  DOWNSTREAM(FEET) =    760.00
  CHANNEL LENGTH THRU SUBAREA(FEET) =   182.50   CHANNEL SLOPE =  0.1644
  CHANNEL BASE(FEET) =    3.00   "Z" FACTOR =   2.000
  MANNING'S FACTOR = 0.030   MAXIMUM DEPTH(FEET) =  10.00
   100 YEAR RAINFALL INTENSITY(INCH/HOUR) =  7.026
  *USER SPECIFIED(SUBAREA):
  NATURAL DESERT LANDSCAPING RUNOFF COEFFICIENT = .3500
  S.C.S. CURVE NUMBER (AMC II) =  85
  TRAVEL TIME COMPUTED USING ESTIMATED FLOW(CFS) =       4.58
  TRAVEL TIME THRU SUBAREA BASED ON VELOCITY(FEET/SEC.) =   6.41
  AVERAGE FLOW DEPTH(FEET) =   0.21   TRAVEL TIME(MIN.) =   0.47
  Tc(MIN.) =    6.63
  SUBAREA AREA(ACRES) =     1.12       SUBAREA RUNOFF(CFS) =    2.75
  AREA-AVERAGE RUNOFF COEFFICIENT =  0.350
  TOTAL AREA(ACRES) =        2.4         PEAK FLOW RATE(CFS) =       5.80

  END OF SUBAREA CHANNEL FLOW HYDRAULICS:
  DEPTH(FEET) =  0.24   FLOW VELOCITY(FEET/SEC.) =   6.97
  LONGEST FLOWPATH FROM NODE    229.00 TO NODE    232.00 =     466.90 FEET.

****************************************************************************
  FLOW PROCESS FROM NODE    232.00 TO NODE    225.00 IS CODE =  51
----------------------------------------------------------------------------
  >>>>>COMPUTE TRAPEZOIDAL CHANNEL FLOW<<<<<
  >>>>>TRAVELTIME THRU SUBAREA (EXISTING ELEMENT)<<<<<
============================================================================
  ELEVATION DATA: UPSTREAM(FEET) =    760.00  DOWNSTREAM(FEET) =    742.00
  CHANNEL LENGTH THRU SUBAREA(FEET) =   160.60   CHANNEL SLOPE =  0.1121
  CHANNEL BASE(FEET) =    3.00   "Z" FACTOR =   2.000
  MANNING'S FACTOR = 0.030   MAXIMUM DEPTH(FEET) =  10.00
   100 YEAR RAINFALL INTENSITY(INCH/HOUR) =  6.752
  *USER SPECIFIED(SUBAREA):
  NATURAL DESERT LANDSCAPING RUNOFF COEFFICIENT = .3500
  S.C.S. CURVE NUMBER (AMC II) =  85
  TRAVEL TIME COMPUTED USING ESTIMATED FLOW(CFS) =       6.44
  TRAVEL TIME THRU SUBAREA BASED ON VELOCITY(FEET/SEC.) =   6.33
  AVERAGE FLOW DEPTH(FEET) =   0.29   TRAVEL TIME(MIN.) =   0.42
  Tc(MIN.) =    7.06
  SUBAREA AREA(ACRES) =     0.54       SUBAREA RUNOFF(CFS) =    1.28
  AREA-AVERAGE RUNOFF COEFFICIENT =  0.350
  TOTAL AREA(ACRES) =        2.9         PEAK FLOW RATE(CFS) =       6.85

  END OF SUBAREA CHANNEL FLOW HYDRAULICS:
  DEPTH(FEET) =  0.29   FLOW VELOCITY(FEET/SEC.) =   6.48
  LONGEST FLOWPATH FROM NODE    229.00 TO NODE    225.00 =     627.50 FEET.

****************************************************************************
  FLOW PROCESS FROM NODE    225.00 TO NODE    225.00 IS CODE =   1
----------------------------------------------------------------------------
  >>>>>DESIGNATE INDEPENDENT STREAM FOR CONFLUENCE<<<<<
  >>>>>AND COMPUTE VARIOUS CONFLUENCED STREAM VALUES<<<<<
============================================================================
  TOTAL NUMBER OF STREAMS =  3
  CONFLUENCE VALUES USED FOR INDEPENDENT STREAM  3 ARE:
  TIME OF CONCENTRATION(MIN.) =    7.06
```

```
  RAINFALL INTENSITY(INCH/HR) =   6.75
  TOTAL STREAM AREA(ACRES) =     2.90
  PEAK FLOW RATE(CFS) AT CONFLUENCE =      6.85

  ** CONFLUENCE DATA **
  STREAM     RUNOFF       Tc      INTENSITY      AREA
  NUMBER      (CFS)     (MIN.)   (INCH/HOUR)    (ACRE)
      1       46.96    10.78        5.136         25.89
      2        3.75     8.52        5.979          1.79
      3        6.85     7.06        6.752          2.90

  RAINFALL INTENSITY AND TIME OF CONCENTRATION RATIO
  CONFLUENCE FORMULA USED FOR  3 STREAMS.

  ** PEAK FLOW RATE TABLE **
  STREAM     RUNOFF      Tc      INTENSITY
  NUMBER      (CFS)    (MIN.)   (INCH/HOUR)
      1       40.69     7.06       6.752
      2       46.92     8.52       5.979
      3       55.39    10.78       5.136

  COMPUTED CONFLUENCE ESTIMATES ARE AS FOLLOWS:
  PEAK FLOW RATE(CFS) =      55.39   Tc(MIN.) =   10.78
  TOTAL AREA(ACRES) =       30.6
  LONGEST FLOWPATH FROM NODE    204.00 TO NODE    225.00 =    2313.10 FEET.

****************************************************************************
  FLOW PROCESS FROM NODE    225.00 TO NODE    233.00 IS CODE =  51
----------------------------------------------------------------------------
  >>>>>COMPUTE TRAPEZOIDAL CHANNEL FLOW<<<<<
  >>>>>TRAVELTIME THRU SUBAREA (EXISTING ELEMENT)<<<<<
============================================================================
  ELEVATION DATA: UPSTREAM(FEET) =    742.00  DOWNSTREAM(FEET) =    724.00
  CHANNEL LENGTH THRU SUBAREA(FEET) =   352.60   CHANNEL SLOPE =  0.0510
  CHANNEL BASE(FEET) =    3.00   "Z" FACTOR =   2.000
  MANNING'S FACTOR = 0.030   MAXIMUM DEPTH(FEET) =  10.00
   100 YEAR RAINFALL INTENSITY(INCH/HOUR) =  4.950
  *USER SPECIFIED(SUBAREA):
  NATURAL DESERT LANDSCAPING RUNOFF COEFFICIENT = .3500
  S.C.S. CURVE NUMBER (AMC II) =  85
  TRAVEL TIME COMPUTED USING ESTIMATED FLOW(CFS) =      56.62
  TRAVEL TIME THRU SUBAREA BASED ON VELOCITY(FEET/SEC.) =   9.23
  AVERAGE FLOW DEPTH(FEET) =   1.15   TRAVEL TIME(MIN.) =   0.64
  Tc(MIN.) =   11.42
  SUBAREA AREA(ACRES) =     1.42       SUBAREA RUNOFF(CFS) =    2.46
  AREA-AVERAGE RUNOFF COEFFICIENT =  0.350
  TOTAL AREA(ACRES) =       32.0         PEAK FLOW RATE(CFS) =      55.44

  END OF SUBAREA CHANNEL FLOW HYDRAULICS:
  DEPTH(FEET) =  1.14   FLOW VELOCITY(FEET/SEC.) =   9.19
  LONGEST FLOWPATH FROM NODE    204.00 TO NODE    233.00 =    2665.70 FEET.

****************************************************************************
  FLOW PROCESS FROM NODE    233.00 TO NODE    233.00 IS CODE =   1
----------------------------------------------------------------------------
  >>>>>DESIGNATE INDEPENDENT STREAM FOR CONFLUENCE<<<<<
============================================================================
  TOTAL NUMBER OF STREAMS =  3
  CONFLUENCE VALUES USED FOR INDEPENDENT STREAM  1 ARE:
  TIME OF CONCENTRATION(MIN.) =   11.42
  RAINFALL INTENSITY(INCH/HR) =   4.95
  TOTAL STREAM AREA(ACRES) =    32.00
  PEAK FLOW RATE(CFS) AT CONFLUENCE =     55.44
```

```
****************************************************************************
  FLOW PROCESS FROM NODE    234.00 TO NODE    235.00 IS CODE =  21
----------------------------------------------------------------------------
  >>>>>RATIONAL METHOD INITIAL SUBAREA ANALYSIS<<<<<
============================================================================
  *USER SPECIFIED(SUBAREA):
  NATURAL DESERT LANDSCAPING RUNOFF COEFFICIENT = .3500
  S.C.S. CURVE NUMBER (AMC II) =  85
  INITIAL SUBAREA FLOW-LENGTH(FEET) =   115.70
  UPSTREAM ELEVATION(FEET) =    804.00
  DOWNSTREAM ELEVATION(FEET) =    788.00
  ELEVATION DIFFERENCE(FEET) =     16.00
  SUBAREA OVERLAND TIME OF FLOW(MIN.) =    6.267
  WARNING: INITIAL SUBAREA FLOW PATH LENGTH IS GREATER THAN
           THE MAXIMUM OVERLAND FLOW LENGTH =   100.00
           (Reference: Table 3-1B of Hydrology Manual)
           THE MAXIMUM OVERLAND FLOW LENGTH IS USED IN Tc CALCULATION!
   100 YEAR RAINFALL INTENSITY(INCH/HOUR) =  7.288
  SUBAREA RUNOFF(CFS) =      0.26
  TOTAL AREA(ACRES) =      0.10   TOTAL RUNOFF(CFS) =      0.26

****************************************************************************
  FLOW PROCESS FROM NODE    235.00 TO NODE    233.00 IS CODE =  51
----------------------------------------------------------------------------
  >>>>>COMPUTE TRAPEZOIDAL CHANNEL FLOW<<<<<
  >>>>>TRAVELTIME THRU SUBAREA (EXISTING ELEMENT)<<<<<
============================================================================
  ELEVATION DATA: UPSTREAM(FEET) =    788.00  DOWNSTREAM(FEET) =    724.00
  CHANNEL LENGTH THRU SUBAREA(FEET) =   511.30   CHANNEL SLOPE =  0.1252
  CHANNEL BASE(FEET) =    3.00   "Z" FACTOR =   2.000
  MANNING'S FACTOR = 0.030   MAXIMUM DEPTH(FEET) =  10.00
   100 YEAR RAINFALL INTENSITY(INCH/HOUR) =  6.107
  *USER SPECIFIED(SUBAREA):
  NATURAL DESERT LANDSCAPING RUNOFF COEFFICIENT = .3500
  S.C.S. CURVE NUMBER (AMC II) =  85
  TRAVEL TIME COMPUTED USING ESTIMATED FLOW(CFS) =       1.78
  TRAVEL TIME THRU SUBAREA BASED ON VELOCITY(FEET/SEC.) =   4.31
  AVERAGE FLOW DEPTH(FEET) =   0.13   TRAVEL TIME(MIN.) =   1.98
  Tc(MIN.) =    8.24
  SUBAREA AREA(ACRES) =     1.42       SUBAREA RUNOFF(CFS) =    3.04
  AREA-AVERAGE RUNOFF COEFFICIENT =  0.350
  TOTAL AREA(ACRES) =        1.5         PEAK FLOW RATE(CFS) =       3.25

  END OF SUBAREA CHANNEL FLOW HYDRAULICS:
  DEPTH(FEET) =  0.19   FLOW VELOCITY(FEET/SEC.) =   5.18
  LONGEST FLOWPATH FROM NODE    234.00 TO NODE    233.00 =     627.00 FEET.

****************************************************************************
  FLOW PROCESS FROM NODE    233.00 TO NODE    233.00 IS CODE =   1
----------------------------------------------------------------------------
  >>>>>DESIGNATE INDEPENDENT STREAM FOR CONFLUENCE<<<<<
============================================================================
  TOTAL NUMBER OF STREAMS =  3
  CONFLUENCE VALUES USED FOR INDEPENDENT STREAM  2 ARE:
  TIME OF CONCENTRATION(MIN.) =    8.24
  RAINFALL INTENSITY(INCH/HR) =   6.11
  TOTAL STREAM AREA(ACRES) =     1.52
  PEAK FLOW RATE(CFS) AT CONFLUENCE =      3.25

****************************************************************************
  FLOW PROCESS FROM NODE    236.00 TO NODE    237.00 IS CODE =  21
----------------------------------------------------------------------------
```

```
  >>>>>RATIONAL METHOD INITIAL SUBAREA ANALYSIS<<<<<
==============================================================================
  *USER SPECIFIED(SUBAREA):
  NATURAL DESERT LANDSCAPING RUNOFF COEFFICIENT = .3500
  S.C.S. CURVE NUMBER (AMC II) =  85
  INITIAL SUBAREA FLOW-LENGTH(FEET) =   121.40
  UPSTREAM ELEVATION(FEET) =    785.00
  DOWNSTREAM ELEVATION(FEET) =    767.00
  ELEVATION DIFFERENCE(FEET) =     18.00
  SUBAREA OVERLAND TIME OF FLOW(MIN.) =    6.267
  WARNING: INITIAL SUBAREA FLOW PATH LENGTH IS GREATER THAN
           THE MAXIMUM OVERLAND FLOW LENGTH =   100.00
           (Reference: Table 3-1B of Hydrology Manual)
           THE MAXIMUM OVERLAND FLOW LENGTH IS USED IN Tc CALCULATION!
   100 YEAR RAINFALL INTENSITY(INCH/HOUR) =  7.288
  SUBAREA RUNOFF(CFS) =      0.26
  TOTAL AREA(ACRES) =      0.10   TOTAL RUNOFF(CFS) =      0.26

******************************************************************************
  FLOW PROCESS FROM NODE    237.00 TO NODE    238.00 IS CODE =  51
------------------------------------------------------------------------------
  >>>>>COMPUTE TRAPEZOIDAL CHANNEL FLOW<<<<<
  >>>>>TRAVELTIME THRU SUBAREA (EXISTING ELEMENT)<<<<<
==============================================================================
  ELEVATION DATA: UPSTREAM(FEET) =    767.00  DOWNSTREAM(FEET) =    736.00
  CHANNEL LENGTH THRU SUBAREA(FEET) =   294.70   CHANNEL SLOPE =  0.1052
  CHANNEL BASE(FEET) =    3.00   "Z" FACTOR =   2.000
  MANNING'S FACTOR = 0.030   MAXIMUM DEPTH(FEET) =  10.00
   100 YEAR RAINFALL INTENSITY(INCH/HOUR) =  6.396
  *USER SPECIFIED(SUBAREA):
  NATURAL DESERT LANDSCAPING RUNOFF COEFFICIENT = .3500
  S.C.S. CURVE NUMBER (AMC II) =  85
  TRAVEL TIME COMPUTED USING ESTIMATED FLOW(CFS) =       1.23
  TRAVEL TIME THRU SUBAREA BASED ON VELOCITY(FEET/SEC.) =   3.49
  AVERAGE FLOW DEPTH(FEET) =   0.11   TRAVEL TIME(MIN.) =   1.41
  Tc(MIN.) =    7.67
  SUBAREA AREA(ACRES) =     0.87       SUBAREA RUNOFF(CFS) =    1.95
  AREA-AVERAGE RUNOFF COEFFICIENT =  0.350
  TOTAL AREA(ACRES) =        1.0         PEAK FLOW RATE(CFS) =       2.17

  END OF SUBAREA CHANNEL FLOW HYDRAULICS:
  DEPTH(FEET) =  0.16   FLOW VELOCITY(FEET/SEC.) =   4.22
  LONGEST FLOWPATH FROM NODE    236.00 TO NODE    238.00 =     416.10 FEET.

******************************************************************************
  FLOW PROCESS FROM NODE    238.00 TO NODE    233.00 IS CODE =  51
------------------------------------------------------------------------------
  >>>>>COMPUTE TRAPEZOIDAL CHANNEL FLOW<<<<<
  >>>>>TRAVELTIME THRU SUBAREA (EXISTING ELEMENT)<<<<<
==============================================================================
  ELEVATION DATA: UPSTREAM(FEET) =    736.00  DOWNSTREAM(FEET) =    724.00
  CHANNEL LENGTH THRU SUBAREA(FEET) =   191.40   CHANNEL SLOPE =  0.0627
  CHANNEL BASE(FEET) =    3.00   "Z" FACTOR =   2.000
  MANNING'S FACTOR = 0.030   MAXIMUM DEPTH(FEET) =  10.00
   100 YEAR RAINFALL INTENSITY(INCH/HOUR) =  5.981
  *USER SPECIFIED(SUBAREA):
  NATURAL DESERT LANDSCAPING RUNOFF COEFFICIENT = .3500
  S.C.S. CURVE NUMBER (AMC II) =  85
  TRAVEL TIME COMPUTED USING ESTIMATED FLOW(CFS) =       2.52
  TRAVEL TIME THRU SUBAREA BASED ON VELOCITY(FEET/SEC.) =   3.80
  AVERAGE FLOW DEPTH(FEET) =   0.20   TRAVEL TIME(MIN.) =   0.84
  Tc(MIN.) =    8.51
  SUBAREA AREA(ACRES) =     0.33       SUBAREA RUNOFF(CFS) =    0.69
```

```
  AREA-AVERAGE RUNOFF COEFFICIENT =  0.350
  TOTAL AREA(ACRES) =        1.3         PEAK FLOW RATE(CFS) =       2.72

  END OF SUBAREA CHANNEL FLOW HYDRAULICS:
  DEPTH(FEET) =  0.20   FLOW VELOCITY(FEET/SEC.) =   3.93
  LONGEST FLOWPATH FROM NODE    236.00 TO NODE    233.00 =     607.50 FEET.

****************************************************************************
  FLOW PROCESS FROM NODE    233.00 TO NODE    233.00 IS CODE =   1
----------------------------------------------------------------------------
  >>>>>DESIGNATE INDEPENDENT STREAM FOR CONFLUENCE<<<<<
  >>>>>AND COMPUTE VARIOUS CONFLUENCED STREAM VALUES<<<<<
============================================================================
  TOTAL NUMBER OF STREAMS =  3
  CONFLUENCE VALUES USED FOR INDEPENDENT STREAM  3 ARE:
  TIME OF CONCENTRATION(MIN.) =    8.51
  RAINFALL INTENSITY(INCH/HR) =   5.98
  TOTAL STREAM AREA(ACRES) =     1.30
  PEAK FLOW RATE(CFS) AT CONFLUENCE =      2.72

  ** CONFLUENCE DATA **
  STREAM     RUNOFF       Tc      INTENSITY      AREA
  NUMBER      (CFS)     (MIN.)   (INCH/HOUR)    (ACRE)
      1       55.44    11.42        4.950         32.00
      2        3.25     8.24        6.107          1.52
      3        2.72     8.51        5.981          1.30

  RAINFALL INTENSITY AND TIME OF CONCENTRATION RATIO
  CONFLUENCE FORMULA USED FOR  3 STREAMS.

  ** PEAK FLOW RATE TABLE **
  STREAM     RUNOFF      Tc      INTENSITY
  NUMBER      (CFS)    (MIN.)   (INCH/HOUR)
      1       50.81     8.24       6.107
      2       51.78     8.51       5.981
      3       60.32    11.42       4.950

  COMPUTED CONFLUENCE ESTIMATES ARE AS FOLLOWS:
  PEAK FLOW RATE(CFS) =      60.32   Tc(MIN.) =   11.42
  TOTAL AREA(ACRES) =       34.8
  LONGEST FLOWPATH FROM NODE    204.00 TO NODE    233.00 =    2665.70 FEET.

****************************************************************************
  FLOW PROCESS FROM NODE    233.00 TO NODE    239.00 IS CODE =  51
----------------------------------------------------------------------------
  >>>>>COMPUTE TRAPEZOIDAL CHANNEL FLOW<<<<<
  >>>>>TRAVELTIME THRU SUBAREA (EXISTING ELEMENT)<<<<<
============================================================================
  ELEVATION DATA: UPSTREAM(FEET) =    724.00  DOWNSTREAM(FEET) =    723.00
  CHANNEL LENGTH THRU SUBAREA(FEET) =    97.20   CHANNEL SLOPE =  0.0103
  CHANNEL BASE(FEET) =    3.00   "Z" FACTOR =   2.000
  MANNING'S FACTOR = 0.030   MAXIMUM DEPTH(FEET) =  10.00
   100 YEAR RAINFALL INTENSITY(INCH/HOUR) =  4.865
  *USER SPECIFIED(SUBAREA):
  NATURAL DESERT LANDSCAPING RUNOFF COEFFICIENT = .3500
  S.C.S. CURVE NUMBER (AMC II) =  85
  TRAVEL TIME COMPUTED USING ESTIMATED FLOW(CFS) =      61.06
  TRAVEL TIME THRU SUBAREA BASED ON VELOCITY(FEET/SEC.) =   5.23
  AVERAGE FLOW DEPTH(FEET) =   1.78   TRAVEL TIME(MIN.) =   0.31
  Tc(MIN.) =   11.73
  SUBAREA AREA(ACRES) =     0.87       SUBAREA RUNOFF(CFS) =    1.48
  AREA-AVERAGE RUNOFF COEFFICIENT =  0.350
  TOTAL AREA(ACRES) =       35.7         PEAK FLOW RATE(CFS) =      60.77
```

```
  END OF SUBAREA CHANNEL FLOW HYDRAULICS:
  DEPTH(FEET) =  1.77   FLOW VELOCITY(FEET/SEC.) =   5.23
  LONGEST FLOWPATH FROM NODE    204.00 TO NODE    239.00 =    2762.90 FEET.

****************************************************************************
  FLOW PROCESS FROM NODE    239.00 TO NODE    240.00 IS CODE =  51
----------------------------------------------------------------------------
  >>>>>COMPUTE TRAPEZOIDAL CHANNEL FLOW<<<<<
  >>>>>TRAVELTIME THRU SUBAREA (EXISTING ELEMENT)<<<<<
============================================================================
  ELEVATION DATA: UPSTREAM(FEET) =    723.00  DOWNSTREAM(FEET) =    714.00
  CHANNEL LENGTH THRU SUBAREA(FEET) =   164.70   CHANNEL SLOPE =  0.0546
  CHANNEL BASE(FEET) =    3.00   "Z" FACTOR =   2.000
  MANNING'S FACTOR = 0.030   MAXIMUM DEPTH(FEET) =  10.00
   100 YEAR RAINFALL INTENSITY(INCH/HOUR) =  4.791
  *USER SPECIFIED(SUBAREA):
  NATURAL DESERT LANDSCAPING RUNOFF COEFFICIENT = .3500
  S.C.S. CURVE NUMBER (AMC II) =  85
  TRAVEL TIME COMPUTED USING ESTIMATED FLOW(CFS) =      61.82
  TRAVEL TIME THRU SUBAREA BASED ON VELOCITY(FEET/SEC.) =   9.71
  AVERAGE FLOW DEPTH(FEET) =   1.19   TRAVEL TIME(MIN.) =   0.28
  Tc(MIN.) =   12.01
  SUBAREA AREA(ACRES) =     1.25       SUBAREA RUNOFF(CFS) =    2.10
  AREA-AVERAGE RUNOFF COEFFICIENT =  0.350
  TOTAL AREA(ACRES) =       36.9         PEAK FLOW RATE(CFS) =      61.94

  END OF SUBAREA CHANNEL FLOW HYDRAULICS:
  DEPTH(FEET) =  1.19   FLOW VELOCITY(FEET/SEC.) =   9.71
  LONGEST FLOWPATH FROM NODE    204.00 TO NODE    240.00 =    2927.60 FEET.

****************************************************************************
  FLOW PROCESS FROM NODE    240.00 TO NODE    241.00 IS CODE =  51
----------------------------------------------------------------------------
  >>>>>COMPUTE TRAPEZOIDAL CHANNEL FLOW<<<<<
  >>>>>TRAVELTIME THRU SUBAREA (EXISTING ELEMENT)<<<<<
============================================================================
  ELEVATION DATA: UPSTREAM(FEET) =    714.00  DOWNSTREAM(FEET) =    704.00
  CHANNEL LENGTH THRU SUBAREA(FEET) =   215.20   CHANNEL SLOPE =  0.0465
  CHANNEL BASE(FEET) =    3.00   "Z" FACTOR =   2.000
  MANNING'S FACTOR = 0.030   MAXIMUM DEPTH(FEET) =  10.00
   100 YEAR RAINFALL INTENSITY(INCH/HOUR) =  4.693
  *USER SPECIFIED(SUBAREA):
  NATURAL DESERT LANDSCAPING RUNOFF COEFFICIENT = .3500
  S.C.S. CURVE NUMBER (AMC II) =  85
  TRAVEL TIME COMPUTED USING ESTIMATED FLOW(CFS) =      62.96
  TRAVEL TIME THRU SUBAREA BASED ON VELOCITY(FEET/SEC.) =   9.20
  AVERAGE FLOW DEPTH(FEET) =   1.25   TRAVEL TIME(MIN.) =   0.39
  Tc(MIN.) =   12.40
  SUBAREA AREA(ACRES) =     1.24       SUBAREA RUNOFF(CFS) =    2.04
  AREA-AVERAGE RUNOFF COEFFICIENT =  0.350
  TOTAL AREA(ACRES) =       38.2         PEAK FLOW RATE(CFS) =      62.71

  END OF SUBAREA CHANNEL FLOW HYDRAULICS:
  DEPTH(FEET) =  1.25   FLOW VELOCITY(FEET/SEC.) =   9.16
  LONGEST FLOWPATH FROM NODE    204.00 TO NODE    241.00 =    3142.80 FEET.

****************************************************************************
  FLOW PROCESS FROM NODE    241.00 TO NODE    241.00 IS CODE =   1
----------------------------------------------------------------------------
  >>>>>DESIGNATE INDEPENDENT STREAM FOR CONFLUENCE<<<<<
============================================================================
  TOTAL NUMBER OF STREAMS =  2
```

```
  CONFLUENCE VALUES USED FOR INDEPENDENT STREAM  1 ARE:
  TIME OF CONCENTRATION(MIN.) =   12.40
  RAINFALL INTENSITY(INCH/HR) =   4.69
  TOTAL STREAM AREA(ACRES) =    38.18
  PEAK FLOW RATE(CFS) AT CONFLUENCE =     62.71

****************************************************************************
  FLOW PROCESS FROM NODE    242.00 TO NODE    243.00 IS CODE =  21
----------------------------------------------------------------------------
  >>>>>RATIONAL METHOD INITIAL SUBAREA ANALYSIS<<<<<
============================================================================
  *USER SPECIFIED(SUBAREA):
  NATURAL DESERT LANDSCAPING RUNOFF COEFFICIENT = .3500
  S.C.S. CURVE NUMBER (AMC II) =  85
  INITIAL SUBAREA FLOW-LENGTH(FEET) =    95.40
  UPSTREAM ELEVATION(FEET) =    808.00
  DOWNSTREAM ELEVATION(FEET) =    792.00
  ELEVATION DIFFERENCE(FEET) =     16.00
  SUBAREA OVERLAND TIME OF FLOW(MIN.) =    6.121
  WARNING: THE MAXIMUM OVERLAND FLOW SLOPE, 10.%, IS USED IN Tc CALCULATION!
   100 YEAR RAINFALL INTENSITY(INCH/HOUR) =  7.400
  SUBAREA RUNOFF(CFS) =      0.28
  TOTAL AREA(ACRES) =      0.11   TOTAL RUNOFF(CFS) =      0.28

****************************************************************************
  FLOW PROCESS FROM NODE    243.00 TO NODE    244.00 IS CODE =  51
----------------------------------------------------------------------------
  >>>>>COMPUTE TRAPEZOIDAL CHANNEL FLOW<<<<<
  >>>>>TRAVELTIME THRU SUBAREA (EXISTING ELEMENT)<<<<<
============================================================================
  ELEVATION DATA: UPSTREAM(FEET) =    792.00  DOWNSTREAM(FEET) =    724.00
  CHANNEL LENGTH THRU SUBAREA(FEET) =   416.70   CHANNEL SLOPE =  0.1632
  CHANNEL BASE(FEET) =    3.00   "Z" FACTOR =   2.000
  MANNING'S FACTOR = 0.030   MAXIMUM DEPTH(FEET) =  10.00
   100 YEAR RAINFALL INTENSITY(INCH/HOUR) =  6.557
  *USER SPECIFIED(SUBAREA):
  NATURAL DESERT LANDSCAPING RUNOFF COEFFICIENT = .3500
  S.C.S. CURVE NUMBER (AMC II) =  85
  TRAVEL TIME COMPUTED USING ESTIMATED FLOW(CFS) =       2.98
  TRAVEL TIME THRU SUBAREA BASED ON VELOCITY(FEET/SEC.) =   5.50
  AVERAGE FLOW DEPTH(FEET) =   0.16   TRAVEL TIME(MIN.) =   1.26
  Tc(MIN.) =    7.38
  SUBAREA AREA(ACRES) =     2.34       SUBAREA RUNOFF(CFS) =    5.37
  AREA-AVERAGE RUNOFF COEFFICIENT =  0.350
  TOTAL AREA(ACRES) =        2.4         PEAK FLOW RATE(CFS) =       5.62

  END OF SUBAREA CHANNEL FLOW HYDRAULICS:
  DEPTH(FEET) =  0.23   FLOW VELOCITY(FEET/SEC.) =   6.94
  LONGEST FLOWPATH FROM NODE    242.00 TO NODE    244.00 =     512.10 FEET.

****************************************************************************
  FLOW PROCESS FROM NODE    244.00 TO NODE    241.00 IS CODE =  51
----------------------------------------------------------------------------
  >>>>>COMPUTE TRAPEZOIDAL CHANNEL FLOW<<<<<
  >>>>>TRAVELTIME THRU SUBAREA (EXISTING ELEMENT)<<<<<
============================================================================
  ELEVATION DATA: UPSTREAM(FEET) =    724.00  DOWNSTREAM(FEET) =    704.00
  CHANNEL LENGTH THRU SUBAREA(FEET) =   282.80   CHANNEL SLOPE =  0.0707
  CHANNEL BASE(FEET) =    3.00   "Z" FACTOR =   2.000
  MANNING'S FACTOR = 0.030   MAXIMUM DEPTH(FEET) =  10.00
   100 YEAR RAINFALL INTENSITY(INCH/HOUR) =  6.099
  *USER SPECIFIED(SUBAREA):
  NATURAL DESERT LANDSCAPING RUNOFF COEFFICIENT = .3500
```

```
  S.C.S. CURVE NUMBER (AMC II) =  85
  TRAVEL TIME COMPUTED USING ESTIMATED FLOW(CFS) =       6.34
  TRAVEL TIME THRU SUBAREA BASED ON VELOCITY(FEET/SEC.) =   5.38
  AVERAGE FLOW DEPTH(FEET) =   0.32   TRAVEL TIME(MIN.) =   0.88
  Tc(MIN.) =    8.26
  SUBAREA AREA(ACRES) =     0.67       SUBAREA RUNOFF(CFS) =    1.43
  AREA-AVERAGE RUNOFF COEFFICIENT =  0.350
  TOTAL AREA(ACRES) =        3.1         PEAK FLOW RATE(CFS) =       6.66

  END OF SUBAREA CHANNEL FLOW HYDRAULICS:
  DEPTH(FEET) =  0.33   FLOW VELOCITY(FEET/SEC.) =   5.50
  LONGEST FLOWPATH FROM NODE    242.00 TO NODE    241.00 =     794.90 FEET.

****************************************************************************
  FLOW PROCESS FROM NODE    241.00 TO NODE    241.00 IS CODE =   1
----------------------------------------------------------------------------
  >>>>>DESIGNATE INDEPENDENT STREAM FOR CONFLUENCE<<<<<
  >>>>>AND COMPUTE VARIOUS CONFLUENCED STREAM VALUES<<<<<
============================================================================
  TOTAL NUMBER OF STREAMS =  2
  CONFLUENCE VALUES USED FOR INDEPENDENT STREAM  2 ARE:
  TIME OF CONCENTRATION(MIN.) =    8.26
  RAINFALL INTENSITY(INCH/HR) =   6.10
  TOTAL STREAM AREA(ACRES) =     3.12
  PEAK FLOW RATE(CFS) AT CONFLUENCE =      6.66

  ** CONFLUENCE DATA **
  STREAM     RUNOFF       Tc      INTENSITY      AREA
  NUMBER      (CFS)     (MIN.)   (INCH/HOUR)    (ACRE)
      1       62.71    12.40        4.693         38.18
      2        6.66     8.26        6.099          3.12

  RAINFALL INTENSITY AND TIME OF CONCENTRATION RATIO
  CONFLUENCE FORMULA USED FOR  2 STREAMS.

  ** PEAK FLOW RATE TABLE **
  STREAM     RUNOFF      Tc      INTENSITY
  NUMBER      (CFS)    (MIN.)   (INCH/HOUR)
      1       54.91     8.26       6.099
      2       67.84    12.40       4.693

  COMPUTED CONFLUENCE ESTIMATES ARE AS FOLLOWS:
  PEAK FLOW RATE(CFS) =      67.84   Tc(MIN.) =   12.40
  TOTAL AREA(ACRES) =       41.3
  LONGEST FLOWPATH FROM NODE    204.00 TO NODE    241.00 =    3142.80 FEET.

****************************************************************************
  FLOW PROCESS FROM NODE    241.00 TO NODE    245.00 IS CODE =  51
----------------------------------------------------------------------------
  >>>>>COMPUTE TRAPEZOIDAL CHANNEL FLOW<<<<<
  >>>>>TRAVELTIME THRU SUBAREA (EXISTING ELEMENT)<<<<<
============================================================================
  ELEVATION DATA: UPSTREAM(FEET) =    704.00  DOWNSTREAM(FEET) =    672.00
  CHANNEL LENGTH THRU SUBAREA(FEET) =   390.00   CHANNEL SLOPE =  0.0821
  CHANNEL BASE(FEET) =    3.00   "Z" FACTOR =   2.000
  MANNING'S FACTOR = 0.030   MAXIMUM DEPTH(FEET) =  10.00
   100 YEAR RAINFALL INTENSITY(INCH/HOUR) =  4.561
  *USER SPECIFIED(SUBAREA):
  NATURAL DESERT LANDSCAPING RUNOFF COEFFICIENT = .3500
  S.C.S. CURVE NUMBER (AMC II) =  85
  TRAVEL TIME COMPUTED USING ESTIMATED FLOW(CFS) =      69.74
  TRAVEL TIME THRU SUBAREA BASED ON VELOCITY(FEET/SEC.) =  11.59
  AVERAGE FLOW DEPTH(FEET) =   1.14   TRAVEL TIME(MIN.) =   0.56
```

```
  Tc(MIN.) =   12.96
  SUBAREA AREA(ACRES) =     2.38       SUBAREA RUNOFF(CFS) =    3.80
  AREA-AVERAGE RUNOFF COEFFICIENT =  0.350
  TOTAL AREA(ACRES) =       43.7         PEAK FLOW RATE(CFS) =      69.73

  END OF SUBAREA CHANNEL FLOW HYDRAULICS:
  DEPTH(FEET) =  1.14   FLOW VELOCITY(FEET/SEC.) =  11.59
  LONGEST FLOWPATH FROM NODE    204.00 TO NODE    245.00 =    3532.80 FEET.

****************************************************************************
  FLOW PROCESS FROM NODE    245.00 TO NODE    245.00 IS CODE =   1
----------------------------------------------------------------------------
  >>>>>DESIGNATE INDEPENDENT STREAM FOR CONFLUENCE<<<<<
============================================================================
  TOTAL NUMBER OF STREAMS =  2
  CONFLUENCE VALUES USED FOR INDEPENDENT STREAM  1 ARE:
  TIME OF CONCENTRATION(MIN.) =   12.96
  RAINFALL INTENSITY(INCH/HR) =   4.56
  TOTAL STREAM AREA(ACRES) =    43.68
  PEAK FLOW RATE(CFS) AT CONFLUENCE =     69.73

****************************************************************************
  FLOW PROCESS FROM NODE    246.00 TO NODE    247.00 IS CODE =  21
----------------------------------------------------------------------------
  >>>>>RATIONAL METHOD INITIAL SUBAREA ANALYSIS<<<<<
============================================================================
  *USER SPECIFIED(SUBAREA):
  NATURAL DESERT LANDSCAPING RUNOFF COEFFICIENT = .3500
  S.C.S. CURVE NUMBER (AMC II) =  85
  INITIAL SUBAREA FLOW-LENGTH(FEET) =    75.00
  UPSTREAM ELEVATION(FEET) =    732.00
  DOWNSTREAM ELEVATION(FEET) =    726.00
  ELEVATION DIFFERENCE(FEET) =      6.00
  SUBAREA OVERLAND TIME OF FLOW(MIN.) =    5.846
   100 YEAR RAINFALL INTENSITY(INCH/HOUR) =  7.622
  SUBAREA RUNOFF(CFS) =      0.27
  TOTAL AREA(ACRES) =      0.10   TOTAL RUNOFF(CFS) =      0.27

****************************************************************************
  FLOW PROCESS FROM NODE    247.00 TO NODE    248.00 IS CODE =  51
----------------------------------------------------------------------------
  >>>>>COMPUTE TRAPEZOIDAL CHANNEL FLOW<<<<<
  >>>>>TRAVELTIME THRU SUBAREA (EXISTING ELEMENT)<<<<<
============================================================================
  ELEVATION DATA: UPSTREAM(FEET) =    726.00  DOWNSTREAM(FEET) =    686.00
  CHANNEL LENGTH THRU SUBAREA(FEET) =   367.60   CHANNEL SLOPE =  0.1088
  CHANNEL BASE(FEET) =    3.00   "Z" FACTOR =   2.000
  MANNING'S FACTOR = 0.030   MAXIMUM DEPTH(FEET) =  10.00
   100 YEAR RAINFALL INTENSITY(INCH/HOUR) =  6.724
  *USER SPECIFIED(SUBAREA):
  NATURAL DESERT LANDSCAPING RUNOFF COEFFICIENT = .3500
  S.C.S. CURVE NUMBER (AMC II) =  85
  TRAVEL TIME COMPUTED USING ESTIMATED FLOW(CFS) =       3.20
  TRAVEL TIME THRU SUBAREA BASED ON VELOCITY(FEET/SEC.) =   4.89
  AVERAGE FLOW DEPTH(FEET) =   0.19   TRAVEL TIME(MIN.) =   1.25
  Tc(MIN.) =    7.10
  SUBAREA AREA(ACRES) =     2.48       SUBAREA RUNOFF(CFS) =    5.84
  AREA-AVERAGE RUNOFF COEFFICIENT =  0.350
  TOTAL AREA(ACRES) =        2.6         PEAK FLOW RATE(CFS) =       6.07

  END OF SUBAREA CHANNEL FLOW HYDRAULICS:
  DEPTH(FEET) =  0.28   FLOW VELOCITY(FEET/SEC.) =   6.15
  LONGEST FLOWPATH FROM NODE    246.00 TO NODE    248.00 =     442.60 FEET.
```

```
****************************************************************************
  FLOW PROCESS FROM NODE    248.00 TO NODE    245.00 IS CODE =  51
----------------------------------------------------------------------------
  >>>>>COMPUTE TRAPEZOIDAL CHANNEL FLOW<<<<<
  >>>>>TRAVELTIME THRU SUBAREA (EXISTING ELEMENT)<<<<<
============================================================================
  ELEVATION DATA: UPSTREAM(FEET) =    686.00  DOWNSTREAM(FEET) =    672.00
  CHANNEL LENGTH THRU SUBAREA(FEET) =   150.80   CHANNEL SLOPE =  0.0928
  CHANNEL BASE(FEET) =    3.00   "Z" FACTOR =   2.000
  MANNING'S FACTOR = 0.030   MAXIMUM DEPTH(FEET) =  10.00
   100 YEAR RAINFALL INTENSITY(INCH/HOUR) =  6.489
  *USER SPECIFIED(SUBAREA):
  NATURAL DESERT LANDSCAPING RUNOFF COEFFICIENT = .3500
  S.C.S. CURVE NUMBER (AMC II) =  85
  TRAVEL TIME COMPUTED USING ESTIMATED FLOW(CFS) =       7.36
  TRAVEL TIME THRU SUBAREA BASED ON VELOCITY(FEET/SEC.) =   6.24
  AVERAGE FLOW DEPTH(FEET) =   0.32   TRAVEL TIME(MIN.) =   0.40
  Tc(MIN.) =    7.50
  SUBAREA AREA(ACRES) =     1.13       SUBAREA RUNOFF(CFS) =    2.57
  AREA-AVERAGE RUNOFF COEFFICIENT =  0.350
  TOTAL AREA(ACRES) =        3.7         PEAK FLOW RATE(CFS) =       8.43

  END OF SUBAREA CHANNEL FLOW HYDRAULICS:
  DEPTH(FEET) =  0.35   FLOW VELOCITY(FEET/SEC.) =   6.55
  LONGEST FLOWPATH FROM NODE    246.00 TO NODE    245.00 =     593.40 FEET.

****************************************************************************
  FLOW PROCESS FROM NODE    245.00 TO NODE    245.00 IS CODE =   1
----------------------------------------------------------------------------
  >>>>>DESIGNATE INDEPENDENT STREAM FOR CONFLUENCE<<<<<
  >>>>>AND COMPUTE VARIOUS CONFLUENCED STREAM VALUES<<<<<
============================================================================
  TOTAL NUMBER OF STREAMS =  2
  CONFLUENCE VALUES USED FOR INDEPENDENT STREAM  2 ARE:
  TIME OF CONCENTRATION(MIN.) =    7.50
  RAINFALL INTENSITY(INCH/HR) =   6.49
  TOTAL STREAM AREA(ACRES) =     3.71
  PEAK FLOW RATE(CFS) AT CONFLUENCE =      8.43

  ** CONFLUENCE DATA **
  STREAM     RUNOFF       Tc      INTENSITY      AREA
  NUMBER      (CFS)     (MIN.)   (INCH/HOUR)    (ACRE)
      1       69.73    12.96        4.561         43.68
      2        8.43     7.50        6.489          3.71

  RAINFALL INTENSITY AND TIME OF CONCENTRATION RATIO
  CONFLUENCE FORMULA USED FOR  2 STREAMS.

  ** PEAK FLOW RATE TABLE **
  STREAM     RUNOFF      Tc      INTENSITY
  NUMBER      (CFS)    (MIN.)   (INCH/HOUR)
      1       57.43     7.50       6.489
      2       75.65    12.96       4.561

  COMPUTED CONFLUENCE ESTIMATES ARE AS FOLLOWS:
  PEAK FLOW RATE(CFS) =      75.65   Tc(MIN.) =   12.96
  TOTAL AREA(ACRES) =       47.4
  LONGEST FLOWPATH FROM NODE    204.00 TO NODE    245.00 =    3532.80 FEET.

****************************************************************************
  FLOW PROCESS FROM NODE    245.00 TO NODE    245.00 IS CODE =  10
----------------------------------------------------------------------------
```

```
  >>>>>MAIN-STREAM MEMORY COPIED ONTO MEMORY BANK # 2 <<<<<
============================================================================

****************************************************************************
  FLOW PROCESS FROM NODE    249.00 TO NODE    250.00 IS CODE =  21
----------------------------------------------------------------------------
  >>>>>RATIONAL METHOD INITIAL SUBAREA ANALYSIS<<<<<
============================================================================
  *USER SPECIFIED(SUBAREA):
  NATURAL DESERT LANDSCAPING RUNOFF COEFFICIENT = .4100
  S.C.S. CURVE NUMBER (AMC II) =  85
  INITIAL SUBAREA FLOW-LENGTH(FEET) =   124.40
  UPSTREAM ELEVATION(FEET) =    864.00
  DOWNSTREAM ELEVATION(FEET) =    842.00
  ELEVATION DIFFERENCE(FEET) =     22.00
  SUBAREA OVERLAND TIME OF FLOW(MIN.) =    5.765
  WARNING: INITIAL SUBAREA FLOW PATH LENGTH IS GREATER THAN
           THE MAXIMUM OVERLAND FLOW LENGTH =   100.00
           (Reference: Table 3-1B of Hydrology Manual)
           THE MAXIMUM OVERLAND FLOW LENGTH IS USED IN Tc CALCULATION!
   100 YEAR RAINFALL INTENSITY(INCH/HOUR) =  7.691
  SUBAREA RUNOFF(CFS) =      0.32
  TOTAL AREA(ACRES) =      0.10   TOTAL RUNOFF(CFS) =      0.32

****************************************************************************
  FLOW PROCESS FROM NODE    250.00 TO NODE    251.00 IS CODE =  51
----------------------------------------------------------------------------
  >>>>>COMPUTE TRAPEZOIDAL CHANNEL FLOW<<<<<
  >>>>>TRAVELTIME THRU SUBAREA (EXISTING ELEMENT)<<<<<
============================================================================
  ELEVATION DATA: UPSTREAM(FEET) =    842.00  DOWNSTREAM(FEET) =    750.00
  CHANNEL LENGTH THRU SUBAREA(FEET) =   602.60   CHANNEL SLOPE =  0.1527
  CHANNEL BASE(FEET) =    3.00   "Z" FACTOR =   2.000
  MANNING'S FACTOR = 0.030   MAXIMUM DEPTH(FEET) =  10.00
   100 YEAR RAINFALL INTENSITY(INCH/HOUR) =  6.518
  *USER SPECIFIED(SUBAREA):
  NATURAL DESERT LANDSCAPING RUNOFF COEFFICIENT = .4100
  S.C.S. CURVE NUMBER (AMC II) =  85
  TRAVEL TIME COMPUTED USING ESTIMATED FLOW(CFS) =       4.08
  TRAVEL TIME THRU SUBAREA BASED ON VELOCITY(FEET/SEC.) =   5.95
  AVERAGE FLOW DEPTH(FEET) =   0.20   TRAVEL TIME(MIN.) =   1.69
  Tc(MIN.) =    7.45
  SUBAREA AREA(ACRES) =     2.79       SUBAREA RUNOFF(CFS) =    7.46
  AREA-AVERAGE RUNOFF COEFFICIENT =  0.410
  TOTAL AREA(ACRES) =        2.9         PEAK FLOW RATE(CFS) =       7.72

  END OF SUBAREA CHANNEL FLOW HYDRAULICS:
  DEPTH(FEET) =  0.29   FLOW VELOCITY(FEET/SEC.) =   7.53
  LONGEST FLOWPATH FROM NODE    249.00 TO NODE    251.00 =     727.00 FEET.

****************************************************************************
  FLOW PROCESS FROM NODE    251.00 TO NODE    252.00 IS CODE =  51
----------------------------------------------------------------------------
  >>>>>COMPUTE TRAPEZOIDAL CHANNEL FLOW<<<<<
  >>>>>TRAVELTIME THRU SUBAREA (EXISTING ELEMENT)<<<<<
============================================================================
  ELEVATION DATA: UPSTREAM(FEET) =    750.00  DOWNSTREAM(FEET) =    730.00
  CHANNEL LENGTH THRU SUBAREA(FEET) =   251.80   CHANNEL SLOPE =  0.0794
  CHANNEL BASE(FEET) =    3.00   "Z" FACTOR =   2.000
  MANNING'S FACTOR = 0.030   MAXIMUM DEPTH(FEET) =  10.00
   100 YEAR RAINFALL INTENSITY(INCH/HOUR) =  6.194
  *USER SPECIFIED(SUBAREA):
  NATURAL DESERT LANDSCAPING RUNOFF COEFFICIENT = .4100
```

```
  S.C.S. CURVE NUMBER (AMC II) =  85
  TRAVEL TIME COMPUTED USING ESTIMATED FLOW(CFS) =      11.87
  TRAVEL TIME THRU SUBAREA BASED ON VELOCITY(FEET/SEC.) =   6.85
  AVERAGE FLOW DEPTH(FEET) =   0.45   TRAVEL TIME(MIN.) =   0.61
  Tc(MIN.) =    8.06
  SUBAREA AREA(ACRES) =     3.26       SUBAREA RUNOFF(CFS) =    8.28
  AREA-AVERAGE RUNOFF COEFFICIENT =  0.410
  TOTAL AREA(ACRES) =        6.1         PEAK FLOW RATE(CFS) =      15.62

  END OF SUBAREA CHANNEL FLOW HYDRAULICS:
  DEPTH(FEET) =  0.52   FLOW VELOCITY(FEET/SEC.) =   7.51
  LONGEST FLOWPATH FROM NODE    249.00 TO NODE    252.00 =     978.80 FEET.

****************************************************************************
  FLOW PROCESS FROM NODE    252.00 TO NODE    253.00 IS CODE =  51
----------------------------------------------------------------------------
  >>>>>COMPUTE TRAPEZOIDAL CHANNEL FLOW<<<<<
  >>>>>TRAVELTIME THRU SUBAREA (EXISTING ELEMENT)<<<<<
============================================================================
  ELEVATION DATA: UPSTREAM(FEET) =    730.00  DOWNSTREAM(FEET) =    720.00
  CHANNEL LENGTH THRU SUBAREA(FEET) =   155.80   CHANNEL SLOPE =  0.0642
  CHANNEL BASE(FEET) =    3.00   "Z" FACTOR =   2.000
  MANNING'S FACTOR = 0.030   MAXIMUM DEPTH(FEET) =  10.00
   100 YEAR RAINFALL INTENSITY(INCH/HOUR) =  6.019
  *USER SPECIFIED(SUBAREA):
  NATURAL DESERT LANDSCAPING RUNOFF COEFFICIENT = .4100
  S.C.S. CURVE NUMBER (AMC II) =  85
  TRAVEL TIME COMPUTED USING ESTIMATED FLOW(CFS) =      16.44
  TRAVEL TIME THRU SUBAREA BASED ON VELOCITY(FEET/SEC.) =   7.10
  AVERAGE FLOW DEPTH(FEET) =   0.56   TRAVEL TIME(MIN.) =   0.37
  Tc(MIN.) =    8.43
  SUBAREA AREA(ACRES) =     0.67       SUBAREA RUNOFF(CFS) =    1.65
  AREA-AVERAGE RUNOFF COEFFICIENT =  0.410
  TOTAL AREA(ACRES) =        6.8         PEAK FLOW RATE(CFS) =      16.83

  END OF SUBAREA CHANNEL FLOW HYDRAULICS:
  DEPTH(FEET) =  0.57   FLOW VELOCITY(FEET/SEC.) =   7.14
  LONGEST FLOWPATH FROM NODE    249.00 TO NODE    253.00 =    1134.60 FEET.

****************************************************************************
  FLOW PROCESS FROM NODE    253.00 TO NODE    253.00 IS CODE =   1
----------------------------------------------------------------------------
  >>>>>DESIGNATE INDEPENDENT STREAM FOR CONFLUENCE<<<<<
============================================================================
  TOTAL NUMBER OF STREAMS =  3
  CONFLUENCE VALUES USED FOR INDEPENDENT STREAM  1 ARE:
  TIME OF CONCENTRATION(MIN.) =    8.43
  RAINFALL INTENSITY(INCH/HR) =   6.02
  TOTAL STREAM AREA(ACRES) =     6.82
  PEAK FLOW RATE(CFS) AT CONFLUENCE =     16.83

****************************************************************************
  FLOW PROCESS FROM NODE    254.00 TO NODE    255.00 IS CODE =  21
----------------------------------------------------------------------------
  >>>>>RATIONAL METHOD INITIAL SUBAREA ANALYSIS<<<<<
============================================================================
  *USER SPECIFIED(SUBAREA):
  NATURAL DESERT LANDSCAPING RUNOFF COEFFICIENT = .3500
  S.C.S. CURVE NUMBER (AMC II) =  85
  INITIAL SUBAREA FLOW-LENGTH(FEET) =    84.80
  UPSTREAM ELEVATION(FEET) =    865.00
  DOWNSTREAM ELEVATION(FEET) =    862.00
  ELEVATION DIFFERENCE(FEET) =      3.00
```

```
  SUBAREA OVERLAND TIME OF FLOW(MIN.) =    8.159
   100 YEAR RAINFALL INTENSITY(INCH/HOUR) =  6.148
  SUBAREA RUNOFF(CFS) =      0.24
  TOTAL AREA(ACRES) =      0.11   TOTAL RUNOFF(CFS) =      0.24

****************************************************************************
  FLOW PROCESS FROM NODE    255.00 TO NODE    256.00 IS CODE =  51
----------------------------------------------------------------------------
  >>>>>COMPUTE TRAPEZOIDAL CHANNEL FLOW<<<<<
  >>>>>TRAVELTIME THRU SUBAREA (EXISTING ELEMENT)<<<<<
============================================================================
  ELEVATION DATA: UPSTREAM(FEET) =    862.00  DOWNSTREAM(FEET) =    744.00
  CHANNEL LENGTH THRU SUBAREA(FEET) =   367.50   CHANNEL SLOPE =  0.3211
  CHANNEL BASE(FEET) =    3.00   "Z" FACTOR =   2.000
  MANNING'S FACTOR = 0.030   MAXIMUM DEPTH(FEET) =  10.00
   100 YEAR RAINFALL INTENSITY(INCH/HOUR) =  5.701
  *USER SPECIFIED(SUBAREA):
  NATURAL DESERT LANDSCAPING RUNOFF COEFFICIENT = .3500
  S.C.S. CURVE NUMBER (AMC II) =  85
  TRAVEL TIME COMPUTED USING ESTIMATED FLOW(CFS) =       2.14
  TRAVEL TIME THRU SUBAREA BASED ON VELOCITY(FEET/SEC.) =   6.06
  AVERAGE FLOW DEPTH(FEET) =   0.11   TRAVEL TIME(MIN.) =   1.01
  Tc(MIN.) =    9.17
  SUBAREA AREA(ACRES) =     1.90       SUBAREA RUNOFF(CFS) =    3.79
  AREA-AVERAGE RUNOFF COEFFICIENT =  0.350
  TOTAL AREA(ACRES) =        2.0         PEAK FLOW RATE(CFS) =       4.01

  END OF SUBAREA CHANNEL FLOW HYDRAULICS:
  DEPTH(FEET) =  0.16   FLOW VELOCITY(FEET/SEC.) =   7.69
  LONGEST FLOWPATH FROM NODE    254.00 TO NODE    256.00 =     452.30 FEET.

****************************************************************************
  FLOW PROCESS FROM NODE    256.00 TO NODE    253.00 IS CODE =  51
----------------------------------------------------------------------------
  >>>>>COMPUTE TRAPEZOIDAL CHANNEL FLOW<<<<<
  >>>>>TRAVELTIME THRU SUBAREA (EXISTING ELEMENT)<<<<<
============================================================================
  ELEVATION DATA: UPSTREAM(FEET) =    744.00  DOWNSTREAM(FEET) =    720.00
  CHANNEL LENGTH THRU SUBAREA(FEET) =   247.60   CHANNEL SLOPE =  0.0969
  CHANNEL BASE(FEET) =    3.00   "Z" FACTOR =   2.000
  MANNING'S FACTOR = 0.030   MAXIMUM DEPTH(FEET) =  10.00
   100 YEAR RAINFALL INTENSITY(INCH/HOUR) =  5.419
  *USER SPECIFIED(SUBAREA):
  NATURAL DESERT LANDSCAPING RUNOFF COEFFICIENT = .4100
  S.C.S. CURVE NUMBER (AMC II) =  85
  TRAVEL TIME COMPUTED USING ESTIMATED FLOW(CFS) =       4.79
  TRAVEL TIME THRU SUBAREA BASED ON VELOCITY(FEET/SEC.) =   5.50
  AVERAGE FLOW DEPTH(FEET) =   0.25   TRAVEL TIME(MIN.) =   0.75
  Tc(MIN.) =    9.92
  SUBAREA AREA(ACRES) =     0.70       SUBAREA RUNOFF(CFS) =    1.56
  AREA-AVERAGE RUNOFF COEFFICIENT =  0.365
  TOTAL AREA(ACRES) =        2.7         PEAK FLOW RATE(CFS) =       5.37

  END OF SUBAREA CHANNEL FLOW HYDRAULICS:
  DEPTH(FEET) =  0.26   FLOW VELOCITY(FEET/SEC.) =   5.76
  LONGEST FLOWPATH FROM NODE    254.00 TO NODE    253.00 =     699.90 FEET.

****************************************************************************
  FLOW PROCESS FROM NODE    253.00 TO NODE    253.00 IS CODE =   1
----------------------------------------------------------------------------
  >>>>>DESIGNATE INDEPENDENT STREAM FOR CONFLUENCE<<<<<
============================================================================
  TOTAL NUMBER OF STREAMS =  3
```

```
  CONFLUENCE VALUES USED FOR INDEPENDENT STREAM  2 ARE:
  TIME OF CONCENTRATION(MIN.) =    9.92
  RAINFALL INTENSITY(INCH/HR) =   5.42
  TOTAL STREAM AREA(ACRES) =     2.71
  PEAK FLOW RATE(CFS) AT CONFLUENCE =      5.37

****************************************************************************
  FLOW PROCESS FROM NODE    257.00 TO NODE    258.00 IS CODE =  21
----------------------------------------------------------------------------
  >>>>>RATIONAL METHOD INITIAL SUBAREA ANALYSIS<<<<<
============================================================================
  *USER SPECIFIED(SUBAREA):
  NATURAL DESERT LANDSCAPING RUNOFF COEFFICIENT = .3500
  S.C.S. CURVE NUMBER (AMC II) =  85
  INITIAL SUBAREA FLOW-LENGTH(FEET) =    75.00
  UPSTREAM ELEVATION(FEET) =    866.00
  DOWNSTREAM ELEVATION(FEET) =    858.00
  ELEVATION DIFFERENCE(FEET) =      8.00
  SUBAREA OVERLAND TIME OF FLOW(MIN.) =    5.427
  WARNING: THE MAXIMUM OVERLAND FLOW SLOPE, 10.%, IS USED IN Tc CALCULATION!
   100 YEAR RAINFALL INTENSITY(INCH/HOUR) =  7.997
  SUBAREA RUNOFF(CFS) =      0.36
  TOTAL AREA(ACRES) =      0.13   TOTAL RUNOFF(CFS) =      0.36

****************************************************************************
  FLOW PROCESS FROM NODE    258.00 TO NODE    259.00 IS CODE =  51
----------------------------------------------------------------------------
  >>>>>COMPUTE TRAPEZOIDAL CHANNEL FLOW<<<<<
  >>>>>TRAVELTIME THRU SUBAREA (EXISTING ELEMENT)<<<<<
============================================================================
  ELEVATION DATA: UPSTREAM(FEET) =    858.00  DOWNSTREAM(FEET) =    774.00
  CHANNEL LENGTH THRU SUBAREA(FEET) =   294.70   CHANNEL SLOPE =  0.2850
  CHANNEL BASE(FEET) =    3.00   "Z" FACTOR =   2.000
  MANNING'S FACTOR = 0.030   MAXIMUM DEPTH(FEET) =  10.00
   100 YEAR RAINFALL INTENSITY(INCH/HOUR) =  7.161
  *USER SPECIFIED(SUBAREA):
  NATURAL DESERT LANDSCAPING RUNOFF COEFFICIENT = .3500
  S.C.S. CURVE NUMBER (AMC II) =  85
  TRAVEL TIME COMPUTED USING ESTIMATED FLOW(CFS) =       1.24
  TRAVEL TIME THRU SUBAREA BASED ON VELOCITY(FEET/SEC.) =   4.84
  AVERAGE FLOW DEPTH(FEET) =   0.08   TRAVEL TIME(MIN.) =   1.01
  Tc(MIN.) =    6.44
  SUBAREA AREA(ACRES) =     0.70       SUBAREA RUNOFF(CFS) =    1.75
  AREA-AVERAGE RUNOFF COEFFICIENT =  0.350
  TOTAL AREA(ACRES) =        0.8         PEAK FLOW RATE(CFS) =       2.08

  END OF SUBAREA CHANNEL FLOW HYDRAULICS:
  DEPTH(FEET) =  0.11   FLOW VELOCITY(FEET/SEC.) =   5.78
  LONGEST FLOWPATH FROM NODE    257.00 TO NODE    259.00 =     369.70 FEET.

****************************************************************************
  FLOW PROCESS FROM NODE    259.00 TO NODE    260.00 IS CODE =  51
----------------------------------------------------------------------------
  >>>>>COMPUTE TRAPEZOIDAL CHANNEL FLOW<<<<<
  >>>>>TRAVELTIME THRU SUBAREA (EXISTING ELEMENT)<<<<<
============================================================================
  ELEVATION DATA: UPSTREAM(FEET) =    774.00  DOWNSTREAM(FEET) =    762.00
  CHANNEL LENGTH THRU SUBAREA(FEET) =    66.30   CHANNEL SLOPE =  0.1810
  CHANNEL BASE(FEET) =    3.00   "Z" FACTOR =   2.000
  MANNING'S FACTOR = 0.030   MAXIMUM DEPTH(FEET) =  10.00
   100 YEAR RAINFALL INTENSITY(INCH/HOUR) =  7.018
  *USER SPECIFIED(SUBAREA):
  NATURAL DESERT LANDSCAPING RUNOFF COEFFICIENT = .3500
```

```
  S.C.S. CURVE NUMBER (AMC II) =  85
  TRAVEL TIME COMPUTED USING ESTIMATED FLOW(CFS) =       2.63
  TRAVEL TIME THRU SUBAREA BASED ON VELOCITY(FEET/SEC.) =   5.40
  AVERAGE FLOW DEPTH(FEET) =   0.15   TRAVEL TIME(MIN.) =   0.20
  Tc(MIN.) =    6.65
  SUBAREA AREA(ACRES) =     0.45       SUBAREA RUNOFF(CFS) =    1.11
  AREA-AVERAGE RUNOFF COEFFICIENT =  0.350
  TOTAL AREA(ACRES) =        1.3         PEAK FLOW RATE(CFS) =       3.14

  END OF SUBAREA CHANNEL FLOW HYDRAULICS:
  DEPTH(FEET) =  0.16   FLOW VELOCITY(FEET/SEC.) =   5.80
  LONGEST FLOWPATH FROM NODE    257.00 TO NODE    260.00 =     436.00 FEET.

****************************************************************************
  FLOW PROCESS FROM NODE    260.00 TO NODE    253.00 IS CODE =  51
----------------------------------------------------------------------------
  >>>>>COMPUTE TRAPEZOIDAL CHANNEL FLOW<<<<<
  >>>>>TRAVELTIME THRU SUBAREA (EXISTING ELEMENT)<<<<<
============================================================================
  ELEVATION DATA: UPSTREAM(FEET) =    762.00  DOWNSTREAM(FEET) =    720.00
  CHANNEL LENGTH THRU SUBAREA(FEET) =   372.30   CHANNEL SLOPE =  0.1128
  CHANNEL BASE(FEET) =    3.00   "Z" FACTOR =   2.000
  MANNING'S FACTOR = 0.030   MAXIMUM DEPTH(FEET) =  10.00
   100 YEAR RAINFALL INTENSITY(INCH/HOUR) =  6.351
  *USER SPECIFIED(SUBAREA):
  NATURAL DESERT LANDSCAPING RUNOFF COEFFICIENT = .3500
  S.C.S. CURVE NUMBER (AMC II) =  85
  TRAVEL TIME COMPUTED USING ESTIMATED FLOW(CFS) =       4.19
  TRAVEL TIME THRU SUBAREA BASED ON VELOCITY(FEET/SEC.) =   5.58
  AVERAGE FLOW DEPTH(FEET) =   0.22   TRAVEL TIME(MIN.) =   1.11
  Tc(MIN.) =    7.76
  SUBAREA AREA(ACRES) =     0.94       SUBAREA RUNOFF(CFS) =    2.09
  AREA-AVERAGE RUNOFF COEFFICIENT =  0.350
  TOTAL AREA(ACRES) =        2.2         PEAK FLOW RATE(CFS) =       4.93

  END OF SUBAREA CHANNEL FLOW HYDRAULICS:
  DEPTH(FEET) =  0.24   FLOW VELOCITY(FEET/SEC.) =   5.87
  LONGEST FLOWPATH FROM NODE    257.00 TO NODE    253.00 =     808.30 FEET.

****************************************************************************
  FLOW PROCESS FROM NODE    253.00 TO NODE    253.00 IS CODE =   1
----------------------------------------------------------------------------
  >>>>>DESIGNATE INDEPENDENT STREAM FOR CONFLUENCE<<<<<
  >>>>>AND COMPUTE VARIOUS CONFLUENCED STREAM VALUES<<<<<
============================================================================
  TOTAL NUMBER OF STREAMS =  3
  CONFLUENCE VALUES USED FOR INDEPENDENT STREAM  3 ARE:
  TIME OF CONCENTRATION(MIN.) =    7.76
  RAINFALL INTENSITY(INCH/HR) =   6.35
  TOTAL STREAM AREA(ACRES) =     2.22
  PEAK FLOW RATE(CFS) AT CONFLUENCE =      4.93

  ** CONFLUENCE DATA **
  STREAM     RUNOFF       Tc      INTENSITY      AREA
  NUMBER      (CFS)     (MIN.)   (INCH/HOUR)    (ACRE)
      1       16.83     8.43        6.019          6.82
      2        5.37     9.92        5.419          2.71
      3        4.93     7.76        6.351          2.22

  RAINFALL INTENSITY AND TIME OF CONCENTRATION RATIO
  CONFLUENCE FORMULA USED FOR  3 STREAMS.

  ** PEAK FLOW RATE TABLE **
```

```
  STREAM     RUNOFF      Tc      INTENSITY
  NUMBER      (CFS)    (MIN.)   (INCH/HOUR)
      1       24.62     7.76       6.351
      2       26.07     8.43       6.019
      3       24.73     9.92       5.419

  COMPUTED CONFLUENCE ESTIMATES ARE AS FOLLOWS:
  PEAK FLOW RATE(CFS) =      26.07   Tc(MIN.) =    8.43
  TOTAL AREA(ACRES) =       11.8
  LONGEST FLOWPATH FROM NODE    249.00 TO NODE    253.00 =    1134.60 FEET.

****************************************************************************
  FLOW PROCESS FROM NODE    253.00 TO NODE    261.00 IS CODE =  51
----------------------------------------------------------------------------
  >>>>>COMPUTE TRAPEZOIDAL CHANNEL FLOW<<<<<
  >>>>>TRAVELTIME THRU SUBAREA (EXISTING ELEMENT)<<<<<
============================================================================
  ELEVATION DATA: UPSTREAM(FEET) =    720.00  DOWNSTREAM(FEET) =    696.00
  CHANNEL LENGTH THRU SUBAREA(FEET) =   376.00   CHANNEL SLOPE =  0.0638
  CHANNEL BASE(FEET) =    3.00   "Z" FACTOR =   2.000
  MANNING'S FACTOR = 0.030   MAXIMUM DEPTH(FEET) =  10.00
   100 YEAR RAINFALL INTENSITY(INCH/HOUR) =  5.692
  *USER SPECIFIED(SUBAREA):
  NATURAL DESERT LANDSCAPING RUNOFF COEFFICIENT = .4100
  S.C.S. CURVE NUMBER (AMC II) =  85
  TRAVEL TIME COMPUTED USING ESTIMATED FLOW(CFS) =      28.09
  TRAVEL TIME THRU SUBAREA BASED ON VELOCITY(FEET/SEC.) =   8.20
  AVERAGE FLOW DEPTH(FEET) =   0.76   TRAVEL TIME(MIN.) =   0.76
  Tc(MIN.) =    9.19
  SUBAREA AREA(ACRES) =     1.73       SUBAREA RUNOFF(CFS) =    4.04
  AREA-AVERAGE RUNOFF COEFFICIENT =  0.391
  TOTAL AREA(ACRES) =       13.5         PEAK FLOW RATE(CFS) =      30.01

  END OF SUBAREA CHANNEL FLOW HYDRAULICS:
  DEPTH(FEET) =  0.78   FLOW VELOCITY(FEET/SEC.) =   8.40
  LONGEST FLOWPATH FROM NODE    249.00 TO NODE    261.00 =    1510.60 FEET.

****************************************************************************
  FLOW PROCESS FROM NODE    261.00 TO NODE    261.00 IS CODE =   1
----------------------------------------------------------------------------
  >>>>>DESIGNATE INDEPENDENT STREAM FOR CONFLUENCE<<<<<
============================================================================
  TOTAL NUMBER OF STREAMS =  2
  CONFLUENCE VALUES USED FOR INDEPENDENT STREAM  1 ARE:
  TIME OF CONCENTRATION(MIN.) =    9.19
  RAINFALL INTENSITY(INCH/HR) =   5.69
  TOTAL STREAM AREA(ACRES) =    13.48
  PEAK FLOW RATE(CFS) AT CONFLUENCE =     30.01

****************************************************************************
  FLOW PROCESS FROM NODE    262.00 TO NODE    263.00 IS CODE =  21
----------------------------------------------------------------------------
  >>>>>RATIONAL METHOD INITIAL SUBAREA ANALYSIS<<<<<
============================================================================
  *USER SPECIFIED(SUBAREA):
  NATURAL DESERT LANDSCAPING RUNOFF COEFFICIENT = .4100
  S.C.S. CURVE NUMBER (AMC II) =  85
  INITIAL SUBAREA FLOW-LENGTH(FEET) =   109.20
  UPSTREAM ELEVATION(FEET) =    785.00
  DOWNSTREAM ELEVATION(FEET) =    782.00
  ELEVATION DIFFERENCE(FEET) =      3.00
  SUBAREA OVERLAND TIME OF FLOW(MIN.) =    8.698
  WARNING: INITIAL SUBAREA FLOW PATH LENGTH IS GREATER THAN
```

```
          THE MAXIMUM OVERLAND FLOW LENGTH =    96.21
          (Reference: Table 3-1B of Hydrology Manual)
          THE MAXIMUM OVERLAND FLOW LENGTH IS USED IN Tc CALCULATION!
   100 YEAR RAINFALL INTENSITY(INCH/HOUR) =  5.899
  SUBAREA RUNOFF(CFS) =      0.27
  TOTAL AREA(ACRES) =      0.11   TOTAL RUNOFF(CFS) =      0.27

****************************************************************************
  FLOW PROCESS FROM NODE    263.00 TO NODE    264.00 IS CODE =  51
----------------------------------------------------------------------------
  >>>>>COMPUTE TRAPEZOIDAL CHANNEL FLOW<<<<<
  >>>>>TRAVELTIME THRU SUBAREA (EXISTING ELEMENT)<<<<<
============================================================================
  ELEVATION DATA: UPSTREAM(FEET) =    782.00  DOWNSTREAM(FEET) =    714.00
  CHANNEL LENGTH THRU SUBAREA(FEET) =   597.70   CHANNEL SLOPE =  0.1138
  CHANNEL BASE(FEET) =    3.00   "Z" FACTOR =   2.000
  MANNING'S FACTOR = 0.030   MAXIMUM DEPTH(FEET) =  10.00
   100 YEAR RAINFALL INTENSITY(INCH/HOUR) =  5.091
  *USER SPECIFIED(SUBAREA):
  NATURAL DESERT LANDSCAPING RUNOFF COEFFICIENT = .4100
  S.C.S. CURVE NUMBER (AMC II) =  85
  TRAVEL TIME COMPUTED USING ESTIMATED FLOW(CFS) =       2.30
  TRAVEL TIME THRU SUBAREA BASED ON VELOCITY(FEET/SEC.) =   4.46
  AVERAGE FLOW DEPTH(FEET) =   0.16   TRAVEL TIME(MIN.) =   2.23
  Tc(MIN.) =   10.93
  SUBAREA AREA(ACRES) =     1.93       SUBAREA RUNOFF(CFS) =    4.03
  AREA-AVERAGE RUNOFF COEFFICIENT =  0.410
  TOTAL AREA(ACRES) =        2.0         PEAK FLOW RATE(CFS) =       4.26

  END OF SUBAREA CHANNEL FLOW HYDRAULICS:
  DEPTH(FEET) =  0.22   FLOW VELOCITY(FEET/SEC.) =   5.51
  LONGEST FLOWPATH FROM NODE    262.00 TO NODE    264.00 =     706.90 FEET.

****************************************************************************
  FLOW PROCESS FROM NODE    264.00 TO NODE    261.00 IS CODE =  51
----------------------------------------------------------------------------
  >>>>>COMPUTE TRAPEZOIDAL CHANNEL FLOW<<<<<
  >>>>>TRAVELTIME THRU SUBAREA (EXISTING ELEMENT)<<<<<
============================================================================
  ELEVATION DATA: UPSTREAM(FEET) =    714.00  DOWNSTREAM(FEET) =    696.00
  CHANNEL LENGTH THRU SUBAREA(FEET) =   195.60   CHANNEL SLOPE =  0.0920
  CHANNEL BASE(FEET) =    3.00   "Z" FACTOR =   2.000
  MANNING'S FACTOR = 0.030   MAXIMUM DEPTH(FEET) =  10.00
   100 YEAR RAINFALL INTENSITY(INCH/HOUR) =  4.923
  *USER SPECIFIED(SUBAREA):
  NATURAL DESERT LANDSCAPING RUNOFF COEFFICIENT = .4100
  S.C.S. CURVE NUMBER (AMC II) =  85
  TRAVEL TIME COMPUTED USING ESTIMATED FLOW(CFS) =       5.38
  TRAVEL TIME THRU SUBAREA BASED ON VELOCITY(FEET/SEC.) =   5.58
  AVERAGE FLOW DEPTH(FEET) =   0.27   TRAVEL TIME(MIN.) =   0.58
  Tc(MIN.) =   11.52
  SUBAREA AREA(ACRES) =     1.11       SUBAREA RUNOFF(CFS) =    2.24
  AREA-AVERAGE RUNOFF COEFFICIENT =  0.410
  TOTAL AREA(ACRES) =        3.2         PEAK FLOW RATE(CFS) =       6.36

  END OF SUBAREA CHANNEL FLOW HYDRAULICS:
  DEPTH(FEET) =  0.30   FLOW VELOCITY(FEET/SEC.) =   5.88
  LONGEST FLOWPATH FROM NODE    262.00 TO NODE    261.00 =     902.50 FEET.

****************************************************************************
  FLOW PROCESS FROM NODE    261.00 TO NODE    261.00 IS CODE =   1
----------------------------------------------------------------------------
  >>>>>DESIGNATE INDEPENDENT STREAM FOR CONFLUENCE<<<<<
```

```
  >>>>>AND COMPUTE VARIOUS CONFLUENCED STREAM VALUES<<<<<
==============================================================================
  TOTAL NUMBER OF STREAMS =  2
  CONFLUENCE VALUES USED FOR INDEPENDENT STREAM  2 ARE:
  TIME OF CONCENTRATION(MIN.) =   11.52
  RAINFALL INTENSITY(INCH/HR) =   4.92
  TOTAL STREAM AREA(ACRES) =     3.15
  PEAK FLOW RATE(CFS) AT CONFLUENCE =      6.36

  ** CONFLUENCE DATA **
  STREAM     RUNOFF       Tc      INTENSITY      AREA
  NUMBER      (CFS)     (MIN.)   (INCH/HOUR)    (ACRE)
      1       30.01     9.19        5.692         13.48
      2        6.36    11.52        4.923          3.15

  RAINFALL INTENSITY AND TIME OF CONCENTRATION RATIO
  CONFLUENCE FORMULA USED FOR  2 STREAMS.

  ** PEAK FLOW RATE TABLE **
  STREAM     RUNOFF      Tc      INTENSITY
  NUMBER      (CFS)    (MIN.)   (INCH/HOUR)
      1       35.09     9.19       5.692
      2       32.31    11.52       4.923

  COMPUTED CONFLUENCE ESTIMATES ARE AS FOLLOWS:
  PEAK FLOW RATE(CFS) =      35.09   Tc(MIN.) =    9.19
  TOTAL AREA(ACRES) =       16.6
  LONGEST FLOWPATH FROM NODE    249.00 TO NODE    261.00 =    1510.60 FEET.

****************************************************************************
  FLOW PROCESS FROM NODE    261.00 TO NODE    245.00 IS CODE =  51
----------------------------------------------------------------------------
  >>>>>COMPUTE TRAPEZOIDAL CHANNEL FLOW<<<<<
  >>>>>TRAVELTIME THRU SUBAREA (EXISTING ELEMENT)<<<<<
==============================================================================
  ELEVATION DATA: UPSTREAM(FEET) =    696.00  DOWNSTREAM(FEET) =    672.00
  CHANNEL LENGTH THRU SUBAREA(FEET) =   284.70   CHANNEL SLOPE =  0.0843
  CHANNEL BASE(FEET) =    3.00   "Z" FACTOR =   2.000
  MANNING'S FACTOR = 0.030   MAXIMUM DEPTH(FEET) =  10.00
   100 YEAR RAINFALL INTENSITY(INCH/HOUR) =  5.505
  *USER SPECIFIED(SUBAREA):
  NATURAL DESERT LANDSCAPING RUNOFF COEFFICIENT = .4100
  S.C.S. CURVE NUMBER (AMC II) =  85
  TRAVEL TIME COMPUTED USING ESTIMATED FLOW(CFS) =      36.08
  TRAVEL TIME THRU SUBAREA BASED ON VELOCITY(FEET/SEC.) =   9.74
  AVERAGE FLOW DEPTH(FEET) =   0.80   TRAVEL TIME(MIN.) =   0.49
  Tc(MIN.) =    9.68
  SUBAREA AREA(ACRES) =     0.88       SUBAREA RUNOFF(CFS) =    1.99
  AREA-AVERAGE RUNOFF COEFFICIENT =  0.396
  TOTAL AREA(ACRES) =       17.5         PEAK FLOW RATE(CFS) =      38.13

  END OF SUBAREA CHANNEL FLOW HYDRAULICS:
  DEPTH(FEET) =  0.83   FLOW VELOCITY(FEET/SEC.) =   9.91
  LONGEST FLOWPATH FROM NODE    249.00 TO NODE    245.00 =    1795.30 FEET.

****************************************************************************
  FLOW PROCESS FROM NODE    245.00 TO NODE    245.00 IS CODE =  11
----------------------------------------------------------------------------
  >>>>>CONFLUENCE MEMORY BANK # 2 WITH THE MAIN-STREAM MEMORY<<<<<
==============================================================================

  ** MAIN STREAM CONFLUENCE DATA **
  STREAM     RUNOFF      Tc      INTENSITY     AREA
```

```
  NUMBER      (CFS)    (MIN.)   (INCH/HOUR)   (ACRE)
      1       38.13     9.68       5.505       17.51
  LONGEST FLOWPATH FROM NODE    249.00 TO NODE    245.00 =    1795.30 FEET.

  ** MEMORY BANK #  2 CONFLUENCE DATA **
  STREAM     RUNOFF      Tc      INTENSITY     AREA
  NUMBER      (CFS)    (MIN.)   (INCH/HOUR)   (ACRE)
      1       75.65    12.96       4.561       47.39
  LONGEST FLOWPATH FROM NODE    204.00 TO NODE    245.00 =    3532.80 FEET.

  ** PEAK FLOW RATE TABLE **
  STREAM    RUNOFF       Tc      INTENSITY
  NUMBER     (CFS)     (MIN.)   (INCH/HOUR)
      1      94.63       9.68        5.505
      2     107.24      12.96        4.561

  COMPUTED CONFLUENCE ESTIMATES ARE AS FOLLOWS:
  PEAK FLOW RATE(CFS) =     107.24   Tc(MIN.) =   12.96
  TOTAL AREA(ACRES) =       64.9

****************************************************************************
  FLOW PROCESS FROM NODE    245.00 TO NODE    266.00 IS CODE =  51
----------------------------------------------------------------------------
  >>>>>COMPUTE TRAPEZOIDAL CHANNEL FLOW<<<<<
  >>>>>TRAVELTIME THRU SUBAREA (EXISTING ELEMENT)<<<<<
============================================================================
  ELEVATION DATA: UPSTREAM(FEET) =    672.00  DOWNSTREAM(FEET) =    668.00
  CHANNEL LENGTH THRU SUBAREA(FEET) =   184.50   CHANNEL SLOPE =  0.0217
  CHANNEL BASE(FEET) =    3.00   "Z" FACTOR =   2.000
  MANNING'S FACTOR = 0.030   MAXIMUM DEPTH(FEET) =  10.00
   100 YEAR RAINFALL INTENSITY(INCH/HOUR) =  4.476
  *USER SPECIFIED(SUBAREA):
  NATURAL DESERT LANDSCAPING RUNOFF COEFFICIENT = .4100
  S.C.S. CURVE NUMBER (AMC II) =  85
  TRAVEL TIME COMPUTED USING ESTIMATED FLOW(CFS) =     107.87
  TRAVEL TIME THRU SUBAREA BASED ON VELOCITY(FEET/SEC.) =   8.02
  AVERAGE FLOW DEPTH(FEET) =   1.95   TRAVEL TIME(MIN.) =   0.38
  Tc(MIN.) =   13.35
  SUBAREA AREA(ACRES) =     0.69       SUBAREA RUNOFF(CFS) =    1.27
  AREA-AVERAGE RUNOFF COEFFICIENT =  0.363
  TOTAL AREA(ACRES) =       65.6         PEAK FLOW RATE(CFS) =     107.24

  END OF SUBAREA CHANNEL FLOW HYDRAULICS:
  DEPTH(FEET) =  1.95   FLOW VELOCITY(FEET/SEC.) =   7.98
  LONGEST FLOWPATH FROM NODE    204.00 TO NODE    266.00 =    3717.30 FEET.

****************************************************************************
  FLOW PROCESS FROM NODE    266.00 TO NODE    266.00 IS CODE =   1
----------------------------------------------------------------------------
  >>>>>DESIGNATE INDEPENDENT STREAM FOR CONFLUENCE<<<<<
============================================================================
  TOTAL NUMBER OF STREAMS =  3
  CONFLUENCE VALUES USED FOR INDEPENDENT STREAM  1 ARE:
  TIME OF CONCENTRATION(MIN.) =   13.35
  RAINFALL INTENSITY(INCH/HR) =   4.48
  TOTAL STREAM AREA(ACRES) =    65.59
  PEAK FLOW RATE(CFS) AT CONFLUENCE =    107.24

****************************************************************************
  FLOW PROCESS FROM NODE    267.00 TO NODE    268.00 IS CODE =  21
----------------------------------------------------------------------------
  >>>>>RATIONAL METHOD INITIAL SUBAREA ANALYSIS<<<<<
============================================================================
```

```
  *USER SPECIFIED(SUBAREA):
  NATURAL DESERT LANDSCAPING RUNOFF COEFFICIENT = .4100
  S.C.S. CURVE NUMBER (AMC II) =  85
  INITIAL SUBAREA FLOW-LENGTH(FEET) =    75.00
  UPSTREAM ELEVATION(FEET) =    785.00
  DOWNSTREAM ELEVATION(FEET) =    782.00
  ELEVATION DIFFERENCE(FEET) =      3.00
  SUBAREA OVERLAND TIME OF FLOW(MIN.) =    6.776
   100 YEAR RAINFALL INTENSITY(INCH/HOUR) =  6.930
  SUBAREA RUNOFF(CFS) =      0.28
  TOTAL AREA(ACRES) =      0.10   TOTAL RUNOFF(CFS) =      0.28

****************************************************************************
  FLOW PROCESS FROM NODE    268.00 TO NODE    269.00 IS CODE =  51
----------------------------------------------------------------------------
  >>>>>COMPUTE TRAPEZOIDAL CHANNEL FLOW<<<<<
  >>>>>TRAVELTIME THRU SUBAREA (EXISTING ELEMENT)<<<<<
============================================================================
  ELEVATION DATA: UPSTREAM(FEET) =    782.00  DOWNSTREAM(FEET) =    758.00
  CHANNEL LENGTH THRU SUBAREA(FEET) =   366.00   CHANNEL SLOPE =  0.0656
  CHANNEL BASE(FEET) =    3.00   "Z" FACTOR =   2.000
  MANNING'S FACTOR = 0.030   MAXIMUM DEPTH(FEET) =  10.00
   100 YEAR RAINFALL INTENSITY(INCH/HOUR) =  6.006
  *USER SPECIFIED(SUBAREA):
  NATURAL DESERT LANDSCAPING RUNOFF COEFFICIENT = .4100
  S.C.S. CURVE NUMBER (AMC II) =  85
  TRAVEL TIME COMPUTED USING ESTIMATED FLOW(CFS) =       2.17
  TRAVEL TIME THRU SUBAREA BASED ON VELOCITY(FEET/SEC.) =   3.63
  AVERAGE FLOW DEPTH(FEET) =   0.18   TRAVEL TIME(MIN.) =   1.68
  Tc(MIN.) =    8.46
  SUBAREA AREA(ACRES) =     1.52       SUBAREA RUNOFF(CFS) =    3.74
  AREA-AVERAGE RUNOFF COEFFICIENT =  0.410
  TOTAL AREA(ACRES) =        1.6         PEAK FLOW RATE(CFS) =       3.99

  END OF SUBAREA CHANNEL FLOW HYDRAULICS:
  DEPTH(FEET) =  0.25   FLOW VELOCITY(FEET/SEC.) =   4.58
  LONGEST FLOWPATH FROM NODE    267.00 TO NODE    269.00 =     441.00 FEET.

****************************************************************************
  FLOW PROCESS FROM NODE    269.00 TO NODE    266.00 IS CODE =  51
----------------------------------------------------------------------------
  >>>>>COMPUTE TRAPEZOIDAL CHANNEL FLOW<<<<<
  >>>>>TRAVELTIME THRU SUBAREA (EXISTING ELEMENT)<<<<<
============================================================================
  ELEVATION DATA: UPSTREAM(FEET) =    758.00  DOWNSTREAM(FEET) =    668.00
  CHANNEL LENGTH THRU SUBAREA(FEET) =   534.40   CHANNEL SLOPE =  0.1684
  CHANNEL BASE(FEET) =    3.00   "Z" FACTOR =   2.000
  MANNING'S FACTOR = 0.030   MAXIMUM DEPTH(FEET) =  10.00
   100 YEAR RAINFALL INTENSITY(INCH/HOUR) =  5.516
  *USER SPECIFIED(SUBAREA):
  NATURAL DESERT LANDSCAPING RUNOFF COEFFICIENT = .4100
  S.C.S. CURVE NUMBER (AMC II) =  85
  TRAVEL TIME COMPUTED USING ESTIMATED FLOW(CFS) =       7.13
  TRAVEL TIME THRU SUBAREA BASED ON VELOCITY(FEET/SEC.) =   7.46
  AVERAGE FLOW DEPTH(FEET) =   0.27   TRAVEL TIME(MIN.) =   1.19
  Tc(MIN.) =    9.65
  SUBAREA AREA(ACRES) =     2.77       SUBAREA RUNOFF(CFS) =    6.26
  AREA-AVERAGE RUNOFF COEFFICIENT =  0.410
  TOTAL AREA(ACRES) =        4.4         PEAK FLOW RATE(CFS) =       9.93

  END OF SUBAREA CHANNEL FLOW HYDRAULICS:
  DEPTH(FEET) =  0.32   FLOW VELOCITY(FEET/SEC.) =   8.42
  LONGEST FLOWPATH FROM NODE    267.00 TO NODE    266.00 =     975.40 FEET.
```

```
****************************************************************************
  FLOW PROCESS FROM NODE    266.00 TO NODE    266.00 IS CODE =   1
----------------------------------------------------------------------------
  >>>>>DESIGNATE INDEPENDENT STREAM FOR CONFLUENCE<<<<<
============================================================================
  TOTAL NUMBER OF STREAMS =  3
  CONFLUENCE VALUES USED FOR INDEPENDENT STREAM  2 ARE:
  TIME OF CONCENTRATION(MIN.) =    9.65
  RAINFALL INTENSITY(INCH/HR) =   5.52
  TOTAL STREAM AREA(ACRES) =     4.39
  PEAK FLOW RATE(CFS) AT CONFLUENCE =      9.93

****************************************************************************
  FLOW PROCESS FROM NODE    270.00 TO NODE    271.00 IS CODE =  21
----------------------------------------------------------------------------
  >>>>>RATIONAL METHOD INITIAL SUBAREA ANALYSIS<<<<<
============================================================================
  *USER SPECIFIED(SUBAREA):
  NATURAL DESERT LANDSCAPING RUNOFF COEFFICIENT = .4100
  S.C.S. CURVE NUMBER (AMC II) =  85
  INITIAL SUBAREA FLOW-LENGTH(FEET) =   119.60
  UPSTREAM ELEVATION(FEET) =    724.00
  DOWNSTREAM ELEVATION(FEET) =    709.00
  ELEVATION DIFFERENCE(FEET) =     15.00
  SUBAREA OVERLAND TIME OF FLOW(MIN.) =    5.765
  WARNING: INITIAL SUBAREA FLOW PATH LENGTH IS GREATER THAN
           THE MAXIMUM OVERLAND FLOW LENGTH =   100.00
           (Reference: Table 3-1B of Hydrology Manual)
           THE MAXIMUM OVERLAND FLOW LENGTH IS USED IN Tc CALCULATION!
   100 YEAR RAINFALL INTENSITY(INCH/HOUR) =  7.691
  SUBAREA RUNOFF(CFS) =      0.32
  TOTAL AREA(ACRES) =      0.10   TOTAL RUNOFF(CFS) =      0.32

****************************************************************************
  FLOW PROCESS FROM NODE    271.00 TO NODE    266.00 IS CODE =  51
----------------------------------------------------------------------------
  >>>>>COMPUTE TRAPEZOIDAL CHANNEL FLOW<<<<<
  >>>>>TRAVELTIME THRU SUBAREA (EXISTING ELEMENT)<<<<<
============================================================================
  ELEVATION DATA: UPSTREAM(FEET) =    709.00  DOWNSTREAM(FEET) =    668.00
  CHANNEL LENGTH THRU SUBAREA(FEET) =   142.10   CHANNEL SLOPE =  0.2885
  CHANNEL BASE(FEET) =    3.00   "Z" FACTOR =   2.000
  MANNING'S FACTOR = 0.030   MAXIMUM DEPTH(FEET) =  10.00
   100 YEAR RAINFALL INTENSITY(INCH/HOUR) =  7.266
  *USER SPECIFIED(SUBAREA):
  NATURAL DESERT LANDSCAPING RUNOFF COEFFICIENT = .4100
  S.C.S. CURVE NUMBER (AMC II) =  85
  TRAVEL TIME COMPUTED USING ESTIMATED FLOW(CFS) =       1.00
  TRAVEL TIME THRU SUBAREA BASED ON VELOCITY(FEET/SEC.) =   4.45
  AVERAGE FLOW DEPTH(FEET) =   0.07   TRAVEL TIME(MIN.) =   0.53
  Tc(MIN.) =    6.30
  SUBAREA AREA(ACRES) =     0.46       SUBAREA RUNOFF(CFS) =    1.37
  AREA-AVERAGE RUNOFF COEFFICIENT =  0.410
  TOTAL AREA(ACRES) =        0.6         PEAK FLOW RATE(CFS) =       1.67

  END OF SUBAREA CHANNEL FLOW HYDRAULICS:
  DEPTH(FEET) =  0.10   FLOW VELOCITY(FEET/SEC.) =   5.42
  LONGEST FLOWPATH FROM NODE    270.00 TO NODE    266.00 =     261.70 FEET.

****************************************************************************
  FLOW PROCESS FROM NODE    266.00 TO NODE    266.00 IS CODE =   1
----------------------------------------------------------------------------
```

```
  >>>>>DESIGNATE INDEPENDENT STREAM FOR CONFLUENCE<<<<<
  >>>>>AND COMPUTE VARIOUS CONFLUENCED STREAM VALUES<<<<<
==============================================================================
  TOTAL NUMBER OF STREAMS =  3
  CONFLUENCE VALUES USED FOR INDEPENDENT STREAM  3 ARE:
  TIME OF CONCENTRATION(MIN.) =    6.30
  RAINFALL INTENSITY(INCH/HR) =   7.27
  TOTAL STREAM AREA(ACRES) =     0.56
  PEAK FLOW RATE(CFS) AT CONFLUENCE =      1.67

  ** CONFLUENCE DATA **
  STREAM     RUNOFF       Tc      INTENSITY      AREA
  NUMBER      (CFS)     (MIN.)   (INCH/HOUR)    (ACRE)
      1      107.24    13.35        4.476         65.59
      2        9.93     9.65        5.516          4.39
      3        1.67     6.30        7.266          0.56

  RAINFALL INTENSITY AND TIME OF CONCENTRATION RATIO
  CONFLUENCE FORMULA USED FOR  3 STREAMS.

  ** PEAK FLOW RATE TABLE **
  STREAM     RUNOFF      Tc      INTENSITY
  NUMBER      (CFS)    (MIN.)   (INCH/HOUR)
      1       58.75     6.30       7.266
      2       88.76     9.65       5.516
      3      116.32    13.35       4.476

  COMPUTED CONFLUENCE ESTIMATES ARE AS FOLLOWS:
  PEAK FLOW RATE(CFS) =     116.32   Tc(MIN.) =   13.35
  TOTAL AREA(ACRES) =       70.5
  LONGEST FLOWPATH FROM NODE    204.00 TO NODE    266.00 =    3717.30 FEET.

****************************************************************************
  FLOW PROCESS FROM NODE    266.00 TO NODE    538.00 IS CODE =  52
----------------------------------------------------------------------------
  >>>>>COMPUTE NATURAL VALLEY CHANNEL FLOW<<<<<
  >>>>>TRAVELTIME THRU SUBAREA<<<<<
==============================================================================
  ELEVATION DATA: UPSTREAM(FEET) =    668.00  DOWNSTREAM(FEET) =    654.00
  CHANNEL LENGTH THRU SUBAREA(FEET) =   290.00   CHANNEL SLOPE =  0.0483
  CHANNEL FLOW THRU SUBAREA(CFS) =     116.32
  FLOW VELOCITY(FEET/SEC) =  10.92 (PER LACFCD/RCFC&WCD HYDROLOGY MANUAL)
  TRAVEL TIME(MIN.) =   0.44   Tc(MIN.) =   13.79
  LONGEST FLOWPATH FROM NODE    204.00 TO NODE    538.00 =    4007.30 FEET.
==============================================================================
  END OF STUDY SUMMARY:
  TOTAL AREA(ACRES)     =       70.5  TC(MIN.) =     13.79
  PEAK FLOW RATE(CFS)   =     116.32
==============================================================================
==============================================================================
  END OF RATIONAL METHOD ANALYSIS
```

BASIN B (CONTINUED FROM RUN 200)

FUSCOE ENGINEERING
6390 Greenwich Drive, Suite 170
San Diego, California 92122
tel 858.554.1500 • fax 858.597.0335
www.fuscoe.com

Job Name: Eden Hills
Existing Hydrology
100 year Design Storm
Job #: 2690-007-02

Date: Aug 2013
EDEN500.DAT
Run Name: 500 Series

Node to Node		Code	Elev 1 (feet)	Elev 2 (feet)	Length (feet)	C or Fric Co.	Area (ac.)	Comments
500	501	2	747	745	69.72	0.41	0.10	
501	502	5	745	706	563.30	0.41	1.11	
502	502	1						1 of 3
503	504	2	755	751	76.26	0.41	0.11	
504	502	5	751	706	423.71	0.41	0.84	
502	502	1						2 of 3
505	506	2	759	753.0	64.03	0.41	0.10	
506	507	5	753	724	224.84	0.41	0.72	
507	502	5	724	706	133.33	0.41	0.31	
502	502	1						3 of 3
502	508	5	706	695	144.25	0.41	1.40	
508	509	5	695	689	87.54	0.41	0.59	
509	509	1						1 of 2
510	511	2	754	750	93.70	0.41	0.10	
511	512	5	750	722	386.80	0.41	2.23	
512	513	5	722	711	711.17	0.41	0.95	
513	509	5	711	689	248.49	0.41	1.09	
509	509	1						2 of 2
509	514	5	689	679	206.15	0.41	2.02	
514	515	5	679	660	311.15	0.41	3.33	
515	516	5	660	649	215.09	0.41	0.87	
516	517	5	649	636	378.59	0.41	2.25	
517	517	1						1 of 3
518	519	2	750	741	87.07	0.41	0.10	
519	520	5	741	693	382.98	0.41	0.92	
520	521	5	693	652	468.55	0.41	0.89	
521	517	5	652	636	394.00	0.41	0.44	
517	517	1						2 of 3
522	523	2	639	638	69.54	0.41	0.10	
523	524	5	638	637	44.59	0.41	2.24	
524	517	5	637	636	272.68	0.41	3.22	
517	517	1						3 of 3
517	525	5	636	630	264.2	0.41	0.3	
525	525	1						1 of 3
526	527	2	740	735	99.0	0.41	0.1	
527	528	5	735	684	495.32	0.41	1.44	

528	530	5	684	671	275.0	0.41	2.76	
530	531	5	671	645	449.12	0.41	2.91	
531	325	5	645	630	374.99	0.35	1.69	
525	525	1						2 of 3
532	533	2	719	703	79.93	0.41	0.10	
533	534	5	703	638	512.58	0.41	2.20	
534	525	5	638	630	355.49	0.35	1.72	
525	525	1						3 of 3
525	535	5	630	628	164.54	0.35	0.84	
535	535	10						save to bank 1
536	537	2	724	701	103.67	0.41	0.10	
537	538	5	701	654	399.13	0.41	2.09	
538	538	1						1 of 2
538	538	7	A=70.5 Tc=13.79 Q=116.32					
538	538	1						2 of 2
538	539	5	654	649	225.33	0.41	0.42	
539	539	1						1 of 2
540	541	2	785	782	99.75	0.41	0.10	
541	542	5	782	758	193.80	0.41	0.80	
542	543	5	758	720	291.62	0.41	2.85	
543	544	5	720	673	302.81	0.41	2.61	
544	539	5	673	649	288.26	0.41	0.87	
539	539	1						2 of 2
539	545	5	649	633	430.22	0.35	1.50	
545	535	5	633	628	190.00	0.35	0.52	
535	535	1						1 of 2
546	547	2	740	732	110.01	0.41	0.10	
547	548	5	732	663	538.85	0.35	1.73	
548	535	5	663	628	671.49	0.35	5.11	
535	535	1						2 of 2
535	535	11						confl. With bank 1
535	535	12						clear bank 1
535	549	5	628	625	370.00	0.35	4.62	
549	549	10						save to bank 2
550	551	2	740	735	81.58	0.41	0.10	
551	552	5	735	655	677.07	0.41	2.64	
552	552	1						1 of 2
553	554	2	755	750	77.43	0.41	0.11	
554	552	5	750	655	689.99	0.41	2.75	
552	552	1						2 of 2
552	549	5	655	625	593.80	0.35	5.02	
549	549	11						confli. With bank 2
549	549	12						clearn bank 2

549	555	5	625	619	602.24	0.35	7.90	
555	555	1						1 of 3
556	557	2	750	740	81.58	0.41	0.11	
557	558	5	740	685	459.62	0.41	5.60	
558	555	5	685	619	871.15	0.41	4.81	
555	555	1						2 of 3
559	560	2	860	855	87.52	0.41	0.08	
560	561	5	855	840	220.61	0.41	0.97	
561	562	5	840	775	371.19	0.41	4.04	
562	563	5	775	725	474.11	0.41	6.56	
563	564	5	725	715	292.84	0.41	7.95	
564	555	5	715	619	584.57	0.41	7.03	
555	555	1						3 of 3
555	565	5	619	613	382.53	0.35	5.37	
565	565	1						1 of 2
566	567	2	732	725	115.28	0.41	0.11	
567	568	5	725	669	416.43	0.35	1.00	
568	569	5	669	661	108.90	0.35	1.62	
569	565	5	661	613	629.84	0.35	3.27	
565	565	1						2 of 2
565	565	10						save to bank 3
546	570	2	740	732	97.72	0.35	0.10	
570	571	5	732	691	311.45	0.35	1.21	
571	572	5	691	644	422.81	0.35	0.78	
572	572	1						1 of 2
573	574	2	696	695	103.35	0.41	0.11	
574	575	5	695	661	312.08	0.35	0.85	
575	572	5	661	644	180.06	0.35	0.60	
572	572	1						2 of 2
572	576	5	644	624	252.06	0.35	1.28	
576	565	5	624	613	228.77	0.35	0.45	
565	565	11						confl. With bank 3
565	577	5	613.0	608	286.20	0.41	8.36	

```
****************************************************************************

            RATIONAL METHOD HYDROLOGY COMPUTER PROGRAM PACKAGE
            Reference: SAN DIEGO COUNTY FLOOD CONTROL DISTRICT
                         2003,1985,1981 HYDROLOGY MANUAL
         (c) Copyright 1982-2012 Advanced Engineering Software (aes)
             Ver. 19.0 Release Date: 06/01/2012  License ID 1355

                           Analysis prepared by:

                             Fuscoe Engineering
                             6390 Greenwich Dr.
                                 Suite 170
                            San Diego, CA 92122

 ************************** DESCRIPTION OF STUDY **************************
* EDEN HILLS                                                               *
* EXISTING HYDROLOGY STUDY - 500 SERIES                                    *
* OCTOBER 20, 2014                                                         *
 ***************************************************************************

  FILE NAME: EDEN500.DAT
  TIME/DATE OF STUDY: 11:18 10/21/2014
----------------------------------------------------------------------------
  USER SPECIFIED HYDROLOGY AND HYDRAULIC MODEL INFORMATION:
----------------------------------------------------------------------------
  2003 SAN DIEGO MANUAL CRITERIA

  USER SPECIFIED STORM EVENT(YEAR) = 100.00
  6-HOUR DURATION PRECIPITATION (INCHES) =   3.200
  SPECIFIED MINIMUM PIPE SIZE(INCH) =  12.00
  SPECIFIED PERCENT OF GRADIENTS(DECIMAL) TO USE FOR FRICTION SLOPE = 0.90
  SAN DIEGO HYDROLOGY MANUAL "C"-VALUES USED FOR RATIONAL METHOD
  NOTE: USE MODIFIED RATIONAL METHOD PROCEDURES FOR CONFLUENCE ANALYSIS
  *USER-DEFINED STREET-SECTIONS FOR COUPLED PIPEFLOW AND STREETFLOW MODEL*
     HALF-  CROWN TO   STREET-CROSSFALL:   CURB  GUTTER-GEOMETRIES:  MANNING
     WIDTH  CROSSFALL  IN-  / OUT-/PARK-  HEIGHT  WIDTH  LIP   HIKE  FACTOR
NO.   (FT)     (FT)    SIDE / SIDE/ WAY    (FT)    (FT)  (FT)  (FT)    (n)
===  =====  =========  =================  ======  ===== ====== ===== =======
  1   30.0     20.0    0.018/0.018/0.020   0.67    2.00 0.0313 0.167 0.0150

  GLOBAL STREET FLOW-DEPTH CONSTRAINTS:
    1. Relative Flow-Depth =  0.00 FEET
       as (Maximum Allowable Street Flow Depth) - (Top-of-Curb)
    2. (Depth)*(Velocity) Constraint =  6.0 (FT*FT/S)
  *SIZE PIPE WITH A FLOW CAPACITY GREATER THAN
   OR EQUAL TO THE UPSTREAM TRIBUTARY PIPE.*

****************************************************************************
  FLOW PROCESS FROM NODE    500.00 TO NODE    501.00 IS CODE =  21
----------------------------------------------------------------------------
  >>>>>RATIONAL METHOD INITIAL SUBAREA ANALYSIS<<<<<
============================================================================
  *USER SPECIFIED(SUBAREA):
  USER-SPECIFIED RUNOFF COEFFICIENT = .4100
  S.C.S. CURVE NUMBER (AMC II) =   0
  INITIAL SUBAREA FLOW-LENGTH(FEET) =    69.72
  UPSTREAM ELEVATION(FEET) =    747.00
  DOWNSTREAM ELEVATION(FEET) =    745.00
  ELEVATION DIFFERENCE(FEET) =      2.00
  SUBAREA OVERLAND TIME OF FLOW(MIN.) =    7.299
   100 YEAR RAINFALL INTENSITY(INCH/HOUR) =  6.606
```

```
  SUBAREA RUNOFF(CFS) =      0.27
  TOTAL AREA(ACRES) =      0.10   TOTAL RUNOFF(CFS) =      0.27

****************************************************************************
  FLOW PROCESS FROM NODE    501.00 TO NODE    502.00 IS CODE =  51
----------------------------------------------------------------------------
  >>>>>COMPUTE TRAPEZOIDAL CHANNEL FLOW<<<<<
  >>>>>TRAVELTIME THRU SUBAREA (EXISTING ELEMENT)<<<<<
============================================================================
  ELEVATION DATA: UPSTREAM(FEET) =    745.00  DOWNSTREAM(FEET) =    706.00
  CHANNEL LENGTH THRU SUBAREA(FEET) =   563.30   CHANNEL SLOPE =  0.0692
  CHANNEL BASE(FEET) =    3.00   "Z" FACTOR =   2.000
  MANNING'S FACTOR = 0.350   MAXIMUM DEPTH(FEET) =  10.00
   100 YEAR RAINFALL INTENSITY(INCH/HOUR) =  3.065
  *USER SPECIFIED(SUBAREA):
  USER-SPECIFIED RUNOFF COEFFICIENT = .4100
  S.C.S. CURVE NUMBER (AMC II) =   0
  TRAVEL TIME COMPUTED USING ESTIMATED FLOW(CFS) =       1.02
  TRAVEL TIME THRU SUBAREA BASED ON VELOCITY(FEET/SEC.) =   0.56
  AVERAGE FLOW DEPTH(FEET) =   0.46   TRAVEL TIME(MIN.) =  16.70
  Tc(MIN.) =   24.00
  SUBAREA AREA(ACRES) =     1.11       SUBAREA RUNOFF(CFS) =    1.40
  AREA-AVERAGE RUNOFF COEFFICIENT =  0.410
  TOTAL AREA(ACRES) =        1.2         PEAK FLOW RATE(CFS) =       1.52

  END OF SUBAREA CHANNEL FLOW HYDRAULICS:
  DEPTH(FEET) =  0.58   FLOW VELOCITY(FEET/SEC.) =   0.63
  LONGEST FLOWPATH FROM NODE    500.00 TO NODE    502.00 =     633.02 FEET.

****************************************************************************
  FLOW PROCESS FROM NODE    502.00 TO NODE    502.00 IS CODE =   1
----------------------------------------------------------------------------
  >>>>>DESIGNATE INDEPENDENT STREAM FOR CONFLUENCE<<<<<
============================================================================
  TOTAL NUMBER OF STREAMS =  3
  CONFLUENCE VALUES USED FOR INDEPENDENT STREAM  1 ARE:
  TIME OF CONCENTRATION(MIN.) =   24.00
  RAINFALL INTENSITY(INCH/HR) =   3.07
  TOTAL STREAM AREA(ACRES) =     1.21
  PEAK FLOW RATE(CFS) AT CONFLUENCE =      1.52

****************************************************************************
  FLOW PROCESS FROM NODE    503.00 TO NODE    504.00 IS CODE =  21
----------------------------------------------------------------------------
  >>>>>RATIONAL METHOD INITIAL SUBAREA ANALYSIS<<<<<
============================================================================
  *USER SPECIFIED(SUBAREA):
  USER-SPECIFIED RUNOFF COEFFICIENT = .4100
  S.C.S. CURVE NUMBER (AMC II) =   0
  INITIAL SUBAREA FLOW-LENGTH(FEET) =    76.26
  UPSTREAM ELEVATION(FEET) =    755.00
  DOWNSTREAM ELEVATION(FEET) =    751.00
  ELEVATION DIFFERENCE(FEET) =      4.00
  SUBAREA OVERLAND TIME OF FLOW(MIN.) =    6.243
   100 YEAR RAINFALL INTENSITY(INCH/HOUR) =  7.306
  SUBAREA RUNOFF(CFS) =      0.33
  TOTAL AREA(ACRES) =      0.11   TOTAL RUNOFF(CFS) =      0.33

****************************************************************************
  FLOW PROCESS FROM NODE    504.00 TO NODE    502.00 IS CODE =  51
----------------------------------------------------------------------------
  >>>>>COMPUTE TRAPEZOIDAL CHANNEL FLOW<<<<<
  >>>>>TRAVELTIME THRU SUBAREA (EXISTING ELEMENT)<<<<<
```

```
==============================================================================
  ELEVATION DATA: UPSTREAM(FEET) =    751.00  DOWNSTREAM(FEET) =    706.00
  CHANNEL LENGTH THRU SUBAREA(FEET) =   423.71   CHANNEL SLOPE =  0.1062
  CHANNEL BASE(FEET) =    3.00   "Z" FACTOR =   2.000
  MANNING'S FACTOR = 0.030   MAXIMUM DEPTH(FEET) =  10.00
   100 YEAR RAINFALL INTENSITY(INCH/HOUR) =  6.146
  *USER SPECIFIED(SUBAREA):
  USER-SPECIFIED RUNOFF COEFFICIENT = .4100
  S.C.S. CURVE NUMBER (AMC II) =   0
  TRAVEL TIME COMPUTED USING ESTIMATED FLOW(CFS) =       1.39
  TRAVEL TIME THRU SUBAREA BASED ON VELOCITY(FEET/SEC.) =   3.68
  AVERAGE FLOW DEPTH(FEET) =   0.12   TRAVEL TIME(MIN.) =   1.92
  Tc(MIN.) =    8.16
  SUBAREA AREA(ACRES) =     0.84       SUBAREA RUNOFF(CFS) =    2.12
  AREA-AVERAGE RUNOFF COEFFICIENT =  0.410
  TOTAL AREA(ACRES) =        0.9         PEAK FLOW RATE(CFS) =       2.39

  END OF SUBAREA CHANNEL FLOW HYDRAULICS:
  DEPTH(FEET) =  0.16   FLOW VELOCITY(FEET/SEC.) =   4.41
  LONGEST FLOWPATH FROM NODE    503.00 TO NODE    502.00 =     499.97 FEET.

****************************************************************************
  FLOW PROCESS FROM NODE    502.00 TO NODE    502.00 IS CODE =   1
----------------------------------------------------------------------------
  >>>>>DESIGNATE INDEPENDENT STREAM FOR CONFLUENCE<<<<<
==============================================================================
  TOTAL NUMBER OF STREAMS =  3
  CONFLUENCE VALUES USED FOR INDEPENDENT STREAM  2 ARE:
  TIME OF CONCENTRATION(MIN.) =    8.16
  RAINFALL INTENSITY(INCH/HR) =   6.15
  TOTAL STREAM AREA(ACRES) =     0.95
  PEAK FLOW RATE(CFS) AT CONFLUENCE =      2.39

****************************************************************************
  FLOW PROCESS FROM NODE    505.00 TO NODE    506.00 IS CODE =  21
----------------------------------------------------------------------------
  >>>>>RATIONAL METHOD INITIAL SUBAREA ANALYSIS<<<<<
==============================================================================
  *USER SPECIFIED(SUBAREA):
  USER-SPECIFIED RUNOFF COEFFICIENT = .4100
  S.C.S. CURVE NUMBER (AMC II) =   0
  INITIAL SUBAREA FLOW-LENGTH(FEET) =    64.03
  UPSTREAM ELEVATION(FEET) =    759.00
  DOWNSTREAM ELEVATION(FEET) =    753.00
  ELEVATION DIFFERENCE(FEET) =      6.00
  SUBAREA OVERLAND TIME OF FLOW(MIN.) =    4.714
   100 YEAR RAINFALL INTENSITY(INCH/HOUR) =  8.431
  NOTE: RAINFALL INTENSITY IS BASED ON Tc = 5-MINUTE.
  SUBAREA RUNOFF(CFS) =      0.35
  TOTAL AREA(ACRES) =      0.10   TOTAL RUNOFF(CFS) =      0.35

****************************************************************************
  FLOW PROCESS FROM NODE    506.00 TO NODE    507.00 IS CODE =  51
----------------------------------------------------------------------------
  >>>>>COMPUTE TRAPEZOIDAL CHANNEL FLOW<<<<<
  >>>>>TRAVELTIME THRU SUBAREA (EXISTING ELEMENT)<<<<<
==============================================================================
  ELEVATION DATA: UPSTREAM(FEET) =    753.00  DOWNSTREAM(FEET) =    724.00
  CHANNEL LENGTH THRU SUBAREA(FEET) =   224.84   CHANNEL SLOPE =  0.1290
  CHANNEL BASE(FEET) =    3.00   "Z" FACTOR =   2.000
  MANNING'S FACTOR = 0.030   MAXIMUM DEPTH(FEET) =  10.00
   100 YEAR RAINFALL INTENSITY(INCH/HOUR) =  7.781
  *USER SPECIFIED(SUBAREA):
```

```
  USER-SPECIFIED RUNOFF COEFFICIENT = .4100
  S.C.S. CURVE NUMBER (AMC II) =   0
  TRAVEL TIME COMPUTED USING ESTIMATED FLOW(CFS) =       1.50
  TRAVEL TIME THRU SUBAREA BASED ON VELOCITY(FEET/SEC.) =   3.95
  AVERAGE FLOW DEPTH(FEET) =   0.12   TRAVEL TIME(MIN.) =   0.95
  Tc(MIN.) =    5.66
  SUBAREA AREA(ACRES) =     0.72       SUBAREA RUNOFF(CFS) =    2.30
  AREA-AVERAGE RUNOFF COEFFICIENT =  0.410
  TOTAL AREA(ACRES) =        0.8         PEAK FLOW RATE(CFS) =       2.62

  END OF SUBAREA CHANNEL FLOW HYDRAULICS:
  DEPTH(FEET) =  0.16   FLOW VELOCITY(FEET/SEC.) =   4.82
  LONGEST FLOWPATH FROM NODE    505.00 TO NODE    507.00 =     288.87 FEET.

****************************************************************************
  FLOW PROCESS FROM NODE    507.00 TO NODE    502.00 IS CODE =  51
----------------------------------------------------------------------------
  >>>>>COMPUTE TRAPEZOIDAL CHANNEL FLOW<<<<<
  >>>>>TRAVELTIME THRU SUBAREA (EXISTING ELEMENT)<<<<<
============================================================================
  ELEVATION DATA: UPSTREAM(FEET) =    724.00  DOWNSTREAM(FEET) =    706.00
  CHANNEL LENGTH THRU SUBAREA(FEET) =   133.33   CHANNEL SLOPE =  0.1350
  CHANNEL BASE(FEET) =    3.00   "Z" FACTOR =   2.000
  MANNING'S FACTOR = 0.030   MAXIMUM DEPTH(FEET) =  10.00
   100 YEAR RAINFALL INTENSITY(INCH/HOUR) =  7.433
  *USER SPECIFIED(SUBAREA):
  USER-SPECIFIED RUNOFF COEFFICIENT = .4100
  S.C.S. CURVE NUMBER (AMC II) =   0
  TRAVEL TIME COMPUTED USING ESTIMATED FLOW(CFS) =       3.09
  TRAVEL TIME THRU SUBAREA BASED ON VELOCITY(FEET/SEC.) =   5.35
  AVERAGE FLOW DEPTH(FEET) =   0.17   TRAVEL TIME(MIN.) =   0.42
  Tc(MIN.) =    6.08
  SUBAREA AREA(ACRES) =     0.31       SUBAREA RUNOFF(CFS) =    0.94
  AREA-AVERAGE RUNOFF COEFFICIENT =  0.410
  TOTAL AREA(ACRES) =        1.1         PEAK FLOW RATE(CFS) =       3.44

  END OF SUBAREA CHANNEL FLOW HYDRAULICS:
  DEPTH(FEET) =  0.19   FLOW VELOCITY(FEET/SEC.) =   5.49
  LONGEST FLOWPATH FROM NODE    505.00 TO NODE    502.00 =     422.20 FEET.

****************************************************************************
  FLOW PROCESS FROM NODE    502.00 TO NODE    502.00 IS CODE =   1
----------------------------------------------------------------------------
  >>>>>DESIGNATE INDEPENDENT STREAM FOR CONFLUENCE<<<<<
  >>>>>AND COMPUTE VARIOUS CONFLUENCED STREAM VALUES<<<<<
============================================================================
  TOTAL NUMBER OF STREAMS =  3
  CONFLUENCE VALUES USED FOR INDEPENDENT STREAM  3 ARE:
  TIME OF CONCENTRATION(MIN.) =    6.08
  RAINFALL INTENSITY(INCH/HR) =   7.43
  TOTAL STREAM AREA(ACRES) =     1.13
  PEAK FLOW RATE(CFS) AT CONFLUENCE =      3.44

  ** CONFLUENCE DATA **
  STREAM     RUNOFF       Tc      INTENSITY      AREA
  NUMBER      (CFS)     (MIN.)   (INCH/HOUR)    (ACRE)
      1        1.52    24.00        3.065          1.21
      2        2.39     8.16        6.146          0.95
      3        3.44     6.08        7.433          1.13

  RAINFALL INTENSITY AND TIME OF CONCENTRATION RATIO
  CONFLUENCE FORMULA USED FOR  3 STREAMS.
```

```
  ** PEAK FLOW RATE TABLE **
  STREAM     RUNOFF      Tc      INTENSITY
  NUMBER      (CFS)    (MIN.)   (INCH/HOUR)
      1        5.61     6.08       7.433
      2        5.76     8.16       6.146
      3        4.14    24.00       3.065

  COMPUTED CONFLUENCE ESTIMATES ARE AS FOLLOWS:
  PEAK FLOW RATE(CFS) =       5.76   Tc(MIN.) =    8.16
  TOTAL AREA(ACRES) =        3.3
  LONGEST FLOWPATH FROM NODE    500.00 TO NODE    502.00 =     633.02 FEET.

****************************************************************************
  FLOW PROCESS FROM NODE    502.00 TO NODE    508.00 IS CODE =  51
----------------------------------------------------------------------------
  >>>>>COMPUTE TRAPEZOIDAL CHANNEL FLOW<<<<<
  >>>>>TRAVELTIME THRU SUBAREA (EXISTING ELEMENT)<<<<<
============================================================================
  ELEVATION DATA: UPSTREAM(FEET) =    706.00  DOWNSTREAM(FEET) =    695.00
  CHANNEL LENGTH THRU SUBAREA(FEET) =   144.25   CHANNEL SLOPE =  0.0763
  CHANNEL BASE(FEET) =    3.00   "Z" FACTOR =   2.000
  MANNING'S FACTOR = 0.030   MAXIMUM DEPTH(FEET) =  10.00
   100 YEAR RAINFALL INTENSITY(INCH/HOUR) =  5.954
  *USER SPECIFIED(SUBAREA):
  USER-SPECIFIED RUNOFF COEFFICIENT = .4100
  S.C.S. CURVE NUMBER (AMC II) =   0
  TRAVEL TIME COMPUTED USING ESTIMATED FLOW(CFS) =       7.47
  TRAVEL TIME THRU SUBAREA BASED ON VELOCITY(FEET/SEC.) =   5.84
  AVERAGE FLOW DEPTH(FEET) =   0.35   TRAVEL TIME(MIN.) =   0.41
  Tc(MIN.) =    8.58
  SUBAREA AREA(ACRES) =     1.40       SUBAREA RUNOFF(CFS) =    3.42
  AREA-AVERAGE RUNOFF COEFFICIENT =  0.410
  TOTAL AREA(ACRES) =        4.7         PEAK FLOW RATE(CFS) =      11.45

  END OF SUBAREA CHANNEL FLOW HYDRAULICS:
  DEPTH(FEET) =  0.44   FLOW VELOCITY(FEET/SEC.) =   6.71
  LONGEST FLOWPATH FROM NODE    500.00 TO NODE    508.00 =     777.27 FEET.

****************************************************************************
  FLOW PROCESS FROM NODE    508.00 TO NODE    509.00 IS CODE =  51
----------------------------------------------------------------------------
  >>>>>COMPUTE TRAPEZOIDAL CHANNEL FLOW<<<<<
  >>>>>TRAVELTIME THRU SUBAREA (EXISTING ELEMENT)<<<<<
============================================================================
  ELEVATION DATA: UPSTREAM(FEET) =    695.00  DOWNSTREAM(FEET) =    689.00
  CHANNEL LENGTH THRU SUBAREA(FEET) =    87.54   CHANNEL SLOPE =  0.0685
  CHANNEL BASE(FEET) =    3.00   "Z" FACTOR =   2.000
  MANNING'S FACTOR = 0.030   MAXIMUM DEPTH(FEET) =  10.00
   100 YEAR RAINFALL INTENSITY(INCH/HOUR) =  5.857
  *USER SPECIFIED(SUBAREA):
  USER-SPECIFIED RUNOFF COEFFICIENT = .4100
  S.C.S. CURVE NUMBER (AMC II) =   0
  TRAVEL TIME COMPUTED USING ESTIMATED FLOW(CFS) =      12.16
  TRAVEL TIME THRU SUBAREA BASED ON VELOCITY(FEET/SEC.) =   6.60
  AVERAGE FLOW DEPTH(FEET) =   0.47   TRAVEL TIME(MIN.) =   0.22
  Tc(MIN.) =    8.80
  SUBAREA AREA(ACRES) =     0.59       SUBAREA RUNOFF(CFS) =    1.42
  AREA-AVERAGE RUNOFF COEFFICIENT =  0.410
  TOTAL AREA(ACRES) =        5.3         PEAK FLOW RATE(CFS) =      12.68

  END OF SUBAREA CHANNEL FLOW HYDRAULICS:
  DEPTH(FEET) =  0.48   FLOW VELOCITY(FEET/SEC.) =   6.71
  LONGEST FLOWPATH FROM NODE    500.00 TO NODE    509.00 =     864.81 FEET.
```

```
****************************************************************************
  FLOW PROCESS FROM NODE    509.00 TO NODE    509.00 IS CODE =   1
----------------------------------------------------------------------------
  >>>>>DESIGNATE INDEPENDENT STREAM FOR CONFLUENCE<<<<<
============================================================================
  TOTAL NUMBER OF STREAMS =  2
  CONFLUENCE VALUES USED FOR INDEPENDENT STREAM  1 ARE:
  TIME OF CONCENTRATION(MIN.) =    8.80
  RAINFALL INTENSITY(INCH/HR) =   5.86
  TOTAL STREAM AREA(ACRES) =     5.28
  PEAK FLOW RATE(CFS) AT CONFLUENCE =     12.68

****************************************************************************
  FLOW PROCESS FROM NODE    510.00 TO NODE    511.00 IS CODE =  21
----------------------------------------------------------------------------
  >>>>>RATIONAL METHOD INITIAL SUBAREA ANALYSIS<<<<<
============================================================================
  *USER SPECIFIED(SUBAREA):
  USER-SPECIFIED RUNOFF COEFFICIENT = .4100
  S.C.S. CURVE NUMBER (AMC II) =   0
  INITIAL SUBAREA FLOW-LENGTH(FEET) =    93.70
  UPSTREAM ELEVATION(FEET) =    754.00
  DOWNSTREAM ELEVATION(FEET) =    750.00
  ELEVATION DIFFERENCE(FEET) =      4.00
  SUBAREA OVERLAND TIME OF FLOW(MIN.) =    7.411
   100 YEAR RAINFALL INTENSITY(INCH/HOUR) =  6.541
  SUBAREA RUNOFF(CFS) =      0.27
  TOTAL AREA(ACRES) =      0.10   TOTAL RUNOFF(CFS) =      0.27

****************************************************************************
  FLOW PROCESS FROM NODE    511.00 TO NODE    512.00 IS CODE =  51
----------------------------------------------------------------------------
  >>>>>COMPUTE TRAPEZOIDAL CHANNEL FLOW<<<<<
  >>>>>TRAVELTIME THRU SUBAREA (EXISTING ELEMENT)<<<<<
============================================================================
  ELEVATION DATA: UPSTREAM(FEET) =    750.00  DOWNSTREAM(FEET) =    722.00
  CHANNEL LENGTH THRU SUBAREA(FEET) =   386.80   CHANNEL SLOPE =  0.0724
  CHANNEL BASE(FEET) =    3.00   "Z" FACTOR =   2.000
  MANNING'S FACTOR = 0.030   MAXIMUM DEPTH(FEET) =  10.00
   100 YEAR RAINFALL INTENSITY(INCH/HOUR) =  5.798
  *USER SPECIFIED(SUBAREA):
  USER-SPECIFIED RUNOFF COEFFICIENT = .4100
  S.C.S. CURVE NUMBER (AMC II) =   0
  TRAVEL TIME COMPUTED USING ESTIMATED FLOW(CFS) =       2.93
  TRAVEL TIME THRU SUBAREA BASED ON VELOCITY(FEET/SEC.) =   4.23
  AVERAGE FLOW DEPTH(FEET) =   0.20   TRAVEL TIME(MIN.) =   1.52
  Tc(MIN.) =    8.93
  SUBAREA AREA(ACRES) =     2.23       SUBAREA RUNOFF(CFS) =    5.30
  AREA-AVERAGE RUNOFF COEFFICIENT =  0.410
  TOTAL AREA(ACRES) =        2.3         PEAK FLOW RATE(CFS) =       5.54

  END OF SUBAREA CHANNEL FLOW HYDRAULICS:
  DEPTH(FEET) =  0.29   FLOW VELOCITY(FEET/SEC.) =   5.24
  LONGEST FLOWPATH FROM NODE    510.00 TO NODE    512.00 =     480.50 FEET.

****************************************************************************
  FLOW PROCESS FROM NODE    512.00 TO NODE    513.00 IS CODE =  51
----------------------------------------------------------------------------
  >>>>>COMPUTE TRAPEZOIDAL CHANNEL FLOW<<<<<
  >>>>>TRAVELTIME THRU SUBAREA (EXISTING ELEMENT)<<<<<
============================================================================
  ELEVATION DATA: UPSTREAM(FEET) =    722.00  DOWNSTREAM(FEET) =    711.00
```

```
  CHANNEL LENGTH THRU SUBAREA(FEET) =   711.17   CHANNEL SLOPE =  0.0155
  CHANNEL BASE(FEET) =    3.00   "Z" FACTOR =   2.000
  MANNING'S FACTOR = 0.030   MAXIMUM DEPTH(FEET) =  10.00
   100 YEAR RAINFALL INTENSITY(INCH/HOUR) =  4.645
  *USER SPECIFIED(SUBAREA):
  USER-SPECIFIED RUNOFF COEFFICIENT = .4100
  S.C.S. CURVE NUMBER (AMC II) =   0
  TRAVEL TIME COMPUTED USING ESTIMATED FLOW(CFS) =       6.45
  TRAVEL TIME THRU SUBAREA BASED ON VELOCITY(FEET/SEC.) =   3.23
  AVERAGE FLOW DEPTH(FEET) =   0.50   TRAVEL TIME(MIN.) =   3.67
  Tc(MIN.) =   12.60
  SUBAREA AREA(ACRES) =     0.95       SUBAREA RUNOFF(CFS) =    1.81
  AREA-AVERAGE RUNOFF COEFFICIENT =  0.410
  TOTAL AREA(ACRES) =        3.3         PEAK FLOW RATE(CFS) =       6.25

  END OF SUBAREA CHANNEL FLOW HYDRAULICS:
  DEPTH(FEET) =  0.49   FLOW VELOCITY(FEET/SEC.) =   3.19
  LONGEST FLOWPATH FROM NODE    510.00 TO NODE    513.00 =    1191.67 FEET.

****************************************************************************
  FLOW PROCESS FROM NODE    513.00 TO NODE    509.00 IS CODE =  51
----------------------------------------------------------------------------
  >>>>>COMPUTE TRAPEZOIDAL CHANNEL FLOW<<<<<
  >>>>>TRAVELTIME THRU SUBAREA (EXISTING ELEMENT)<<<<<
============================================================================
  ELEVATION DATA: UPSTREAM(FEET) =    711.00  DOWNSTREAM(FEET) =    689.00
  CHANNEL LENGTH THRU SUBAREA(FEET) =   248.49   CHANNEL SLOPE =  0.0885
  CHANNEL BASE(FEET) =    3.00   "Z" FACTOR =   2.000
  MANNING'S FACTOR = 0.030   MAXIMUM DEPTH(FEET) =  10.00
   100 YEAR RAINFALL INTENSITY(INCH/HOUR) =  4.490
  *USER SPECIFIED(SUBAREA):
  USER-SPECIFIED RUNOFF COEFFICIENT = .4100
  S.C.S. CURVE NUMBER (AMC II) =   0
  TRAVEL TIME COMPUTED USING ESTIMATED FLOW(CFS) =       7.25
  TRAVEL TIME THRU SUBAREA BASED ON VELOCITY(FEET/SEC.) =   6.11
  AVERAGE FLOW DEPTH(FEET) =   0.33   TRAVEL TIME(MIN.) =   0.68
  Tc(MIN.) =   13.28
  SUBAREA AREA(ACRES) =     1.09       SUBAREA RUNOFF(CFS) =    2.01
  AREA-AVERAGE RUNOFF COEFFICIENT =  0.410
  TOTAL AREA(ACRES) =        4.4         PEAK FLOW RATE(CFS) =       8.05

  END OF SUBAREA CHANNEL FLOW HYDRAULICS:
  DEPTH(FEET) =  0.35   FLOW VELOCITY(FEET/SEC.) =   6.29
  LONGEST FLOWPATH FROM NODE    510.00 TO NODE    509.00 =    1440.16 FEET.

****************************************************************************
  FLOW PROCESS FROM NODE    509.00 TO NODE    509.00 IS CODE =   1
----------------------------------------------------------------------------
  >>>>>DESIGNATE INDEPENDENT STREAM FOR CONFLUENCE<<<<<
  >>>>>AND COMPUTE VARIOUS CONFLUENCED STREAM VALUES<<<<<
============================================================================
  TOTAL NUMBER OF STREAMS =  2
  CONFLUENCE VALUES USED FOR INDEPENDENT STREAM  2 ARE:
  TIME OF CONCENTRATION(MIN.) =   13.28
  RAINFALL INTENSITY(INCH/HR) =   4.49
  TOTAL STREAM AREA(ACRES) =     4.37
  PEAK FLOW RATE(CFS) AT CONFLUENCE =      8.05

  ** CONFLUENCE DATA **
  STREAM     RUNOFF       Tc      INTENSITY      AREA
  NUMBER      (CFS)     (MIN.)   (INCH/HOUR)    (ACRE)
      1       12.68     8.80        5.857          5.28
      2        8.05    13.28        4.490          4.37
```

```
  RAINFALL INTENSITY AND TIME OF CONCENTRATION RATIO
  CONFLUENCE FORMULA USED FOR  2 STREAMS.

  ** PEAK FLOW RATE TABLE **
  STREAM     RUNOFF      Tc      INTENSITY
  NUMBER      (CFS)    (MIN.)   (INCH/HOUR)
      1       18.01     8.80       5.857
      2       17.77    13.28       4.490

  COMPUTED CONFLUENCE ESTIMATES ARE AS FOLLOWS:
  PEAK FLOW RATE(CFS) =      18.01   Tc(MIN.) =    8.80
  TOTAL AREA(ACRES) =        9.6
  LONGEST FLOWPATH FROM NODE    510.00 TO NODE    509.00 =    1440.16 FEET.

****************************************************************************
  FLOW PROCESS FROM NODE    509.00 TO NODE    514.00 IS CODE =  51
----------------------------------------------------------------------------
  >>>>>COMPUTE TRAPEZOIDAL CHANNEL FLOW<<<<<
  >>>>>TRAVELTIME THRU SUBAREA (EXISTING ELEMENT)<<<<<
============================================================================
  ELEVATION DATA: UPSTREAM(FEET) =    689.00  DOWNSTREAM(FEET) =    679.00
  CHANNEL LENGTH THRU SUBAREA(FEET) =   206.15   CHANNEL SLOPE =  0.0485
  CHANNEL BASE(FEET) =    3.00   "Z" FACTOR =   2.000
  MANNING'S FACTOR = 0.030   MAXIMUM DEPTH(FEET) =  10.00
   100 YEAR RAINFALL INTENSITY(INCH/HOUR) =  5.650
  *USER SPECIFIED(SUBAREA):
  USER-SPECIFIED RUNOFF COEFFICIENT = .4100
  S.C.S. CURVE NUMBER (AMC II) =   0
  TRAVEL TIME COMPUTED USING ESTIMATED FLOW(CFS) =      20.35
  TRAVEL TIME THRU SUBAREA BASED ON VELOCITY(FEET/SEC.) =   6.81
  AVERAGE FLOW DEPTH(FEET) =   0.68   TRAVEL TIME(MIN.) =   0.50
  Tc(MIN.) =    9.30
  SUBAREA AREA(ACRES) =     2.02       SUBAREA RUNOFF(CFS) =    4.68
  AREA-AVERAGE RUNOFF COEFFICIENT =  0.410
  TOTAL AREA(ACRES) =       11.7         PEAK FLOW RATE(CFS) =      27.03

  END OF SUBAREA CHANNEL FLOW HYDRAULICS:
  DEPTH(FEET) =  0.80   FLOW VELOCITY(FEET/SEC.) =   7.39
  LONGEST FLOWPATH FROM NODE    510.00 TO NODE    514.00 =    1646.31 FEET.

****************************************************************************
  FLOW PROCESS FROM NODE    514.00 TO NODE    515.00 IS CODE =  51
----------------------------------------------------------------------------
  >>>>>COMPUTE TRAPEZOIDAL CHANNEL FLOW<<<<<
  >>>>>TRAVELTIME THRU SUBAREA (EXISTING ELEMENT)<<<<<
============================================================================
  ELEVATION DATA: UPSTREAM(FEET) =    679.00  DOWNSTREAM(FEET) =    660.00
  CHANNEL LENGTH THRU SUBAREA(FEET) =   311.15   CHANNEL SLOPE =  0.0611
  CHANNEL BASE(FEET) =    3.00   "Z" FACTOR =   2.000
  MANNING'S FACTOR = 0.030   MAXIMUM DEPTH(FEET) =  10.00
   100 YEAR RAINFALL INTENSITY(INCH/HOUR) =  5.418
  *USER SPECIFIED(SUBAREA):
  USER-SPECIFIED RUNOFF COEFFICIENT = .4100
  S.C.S. CURVE NUMBER (AMC II) =   0
  TRAVEL TIME COMPUTED USING ESTIMATED FLOW(CFS) =      30.73
  TRAVEL TIME THRU SUBAREA BASED ON VELOCITY(FEET/SEC.) =   8.30
  AVERAGE FLOW DEPTH(FEET) =   0.80   TRAVEL TIME(MIN.) =   0.63
  Tc(MIN.) =    9.93
  SUBAREA AREA(ACRES) =     3.33       SUBAREA RUNOFF(CFS) =    7.40
  AREA-AVERAGE RUNOFF COEFFICIENT =  0.410
  TOTAL AREA(ACRES) =       15.0         PEAK FLOW RATE(CFS) =      33.32
```

```
  END OF SUBAREA CHANNEL FLOW HYDRAULICS:
  DEPTH(FEET) =  0.84   FLOW VELOCITY(FEET/SEC.) =   8.53
  LONGEST FLOWPATH FROM NODE    510.00 TO NODE    515.00 =    1957.46 FEET.

****************************************************************************
  FLOW PROCESS FROM NODE    515.00 TO NODE    516.00 IS CODE =  51
----------------------------------------------------------------------------
  >>>>>COMPUTE TRAPEZOIDAL CHANNEL FLOW<<<<<
  >>>>>TRAVELTIME THRU SUBAREA (EXISTING ELEMENT)<<<<<
============================================================================
  ELEVATION DATA: UPSTREAM(FEET) =    660.00  DOWNSTREAM(FEET) =    649.00
  CHANNEL LENGTH THRU SUBAREA(FEET) =   215.09   CHANNEL SLOPE =  0.0511
  CHANNEL BASE(FEET) =    3.00   "Z" FACTOR =   2.000
  MANNING'S FACTOR = 0.030   MAXIMUM DEPTH(FEET) =  10.00
   100 YEAR RAINFALL INTENSITY(INCH/HOUR) =  5.267
  *USER SPECIFIED(SUBAREA):
  USER-SPECIFIED RUNOFF COEFFICIENT = .4100
  S.C.S. CURVE NUMBER (AMC II) =   0
  TRAVEL TIME COMPUTED USING ESTIMATED FLOW(CFS) =      34.26
  TRAVEL TIME THRU SUBAREA BASED ON VELOCITY(FEET/SEC.) =   8.06
  AVERAGE FLOW DEPTH(FEET) =   0.89   TRAVEL TIME(MIN.) =   0.45
  Tc(MIN.) =   10.37
  SUBAREA AREA(ACRES) =     0.87       SUBAREA RUNOFF(CFS) =    1.88
  AREA-AVERAGE RUNOFF COEFFICIENT =  0.410
  TOTAL AREA(ACRES) =       15.9         PEAK FLOW RATE(CFS) =      34.27

  END OF SUBAREA CHANNEL FLOW HYDRAULICS:
  DEPTH(FEET) =  0.89   FLOW VELOCITY(FEET/SEC.) =   8.06
  LONGEST FLOWPATH FROM NODE    510.00 TO NODE    516.00 =    2172.55 FEET.

****************************************************************************
  FLOW PROCESS FROM NODE    516.00 TO NODE    517.00 IS CODE =  51
----------------------------------------------------------------------------
  >>>>>COMPUTE TRAPEZOIDAL CHANNEL FLOW<<<<<
  >>>>>TRAVELTIME THRU SUBAREA (EXISTING ELEMENT)<<<<<
============================================================================
  ELEVATION DATA: UPSTREAM(FEET) =    649.00  DOWNSTREAM(FEET) =    636.00
  CHANNEL LENGTH THRU SUBAREA(FEET) =   378.59   CHANNEL SLOPE =  0.0343
  CHANNEL BASE(FEET) =    3.00   "Z" FACTOR =   2.000
  MANNING'S FACTOR = 0.030   MAXIMUM DEPTH(FEET) =  10.00
   100 YEAR RAINFALL INTENSITY(INCH/HOUR) =  4.995
  *USER SPECIFIED(SUBAREA):
  USER-SPECIFIED RUNOFF COEFFICIENT = .4100
  S.C.S. CURVE NUMBER (AMC II) =   0
  TRAVEL TIME COMPUTED USING ESTIMATED FLOW(CFS) =      36.57
  TRAVEL TIME THRU SUBAREA BASED ON VELOCITY(FEET/SEC.) =   7.12
  AVERAGE FLOW DEPTH(FEET) =   1.02   TRAVEL TIME(MIN.) =   0.89
  Tc(MIN.) =   11.26
  SUBAREA AREA(ACRES) =     2.25       SUBAREA RUNOFF(CFS) =    4.61
  AREA-AVERAGE RUNOFF COEFFICIENT =  0.410
  TOTAL AREA(ACRES) =       18.1         PEAK FLOW RATE(CFS) =      37.11

  END OF SUBAREA CHANNEL FLOW HYDRAULICS:
  DEPTH(FEET) =  1.03   FLOW VELOCITY(FEET/SEC.) =   7.15
  LONGEST FLOWPATH FROM NODE    510.00 TO NODE    517.00 =    2551.14 FEET.

****************************************************************************
  FLOW PROCESS FROM NODE    517.00 TO NODE    517.00 IS CODE =   1
----------------------------------------------------------------------------
  >>>>>DESIGNATE INDEPENDENT STREAM FOR CONFLUENCE<<<<<
============================================================================
  TOTAL NUMBER OF STREAMS =  3
  CONFLUENCE VALUES USED FOR INDEPENDENT STREAM  1 ARE:
```

```
  TIME OF CONCENTRATION(MIN.) =   11.26
  RAINFALL INTENSITY(INCH/HR) =   5.00
  TOTAL STREAM AREA(ACRES) =    18.12
  PEAK FLOW RATE(CFS) AT CONFLUENCE =     37.11

****************************************************************************
  FLOW PROCESS FROM NODE    518.00 TO NODE    519.00 IS CODE =  21
----------------------------------------------------------------------------
  >>>>>RATIONAL METHOD INITIAL SUBAREA ANALYSIS<<<<<
============================================================================
  *USER SPECIFIED(SUBAREA):
  USER-SPECIFIED RUNOFF COEFFICIENT = .4100
  S.C.S. CURVE NUMBER (AMC II) =   0
  INITIAL SUBAREA FLOW-LENGTH(FEET) =    87.07
  UPSTREAM ELEVATION(FEET) =    750.00
  DOWNSTREAM ELEVATION(FEET) =    741.00
  ELEVATION DIFFERENCE(FEET) =      9.00
  SUBAREA OVERLAND TIME OF FLOW(MIN.) =    5.380
  WARNING: THE MAXIMUM OVERLAND FLOW SLOPE, 10.%, IS USED IN Tc CALCULATION!
   100 YEAR RAINFALL INTENSITY(INCH/HOUR) =  8.042
  SUBAREA RUNOFF(CFS) =      0.33
  TOTAL AREA(ACRES) =      0.10   TOTAL RUNOFF(CFS) =      0.33

****************************************************************************
  FLOW PROCESS FROM NODE    519.00 TO NODE    520.00 IS CODE =  51
----------------------------------------------------------------------------
  >>>>>COMPUTE TRAPEZOIDAL CHANNEL FLOW<<<<<
  >>>>>TRAVELTIME THRU SUBAREA (EXISTING ELEMENT)<<<<<
============================================================================
  ELEVATION DATA: UPSTREAM(FEET) =    741.00  DOWNSTREAM(FEET) =    693.00
  CHANNEL LENGTH THRU SUBAREA(FEET) =   382.98   CHANNEL SLOPE =  0.1253
  CHANNEL BASE(FEET) =    3.00   "Z" FACTOR =   2.000
  MANNING'S FACTOR = 0.030   MAXIMUM DEPTH(FEET) =  10.00
   100 YEAR RAINFALL INTENSITY(INCH/HOUR) =  6.802
  *USER SPECIFIED(SUBAREA):
  USER-SPECIFIED RUNOFF COEFFICIENT = .4100
  S.C.S. CURVE NUMBER (AMC II) =   0
  TRAVEL TIME COMPUTED USING ESTIMATED FLOW(CFS) =       1.62
  TRAVEL TIME THRU SUBAREA BASED ON VELOCITY(FEET/SEC.) =   4.00
  AVERAGE FLOW DEPTH(FEET) =   0.12   TRAVEL TIME(MIN.) =   1.60
  Tc(MIN.) =    6.97
  SUBAREA AREA(ACRES) =     0.92       SUBAREA RUNOFF(CFS) =    2.57
  AREA-AVERAGE RUNOFF COEFFICIENT =  0.410
  TOTAL AREA(ACRES) =        1.0         PEAK FLOW RATE(CFS) =       2.84

  END OF SUBAREA CHANNEL FLOW HYDRAULICS:
  DEPTH(FEET) =  0.17   FLOW VELOCITY(FEET/SEC.) =   4.99
  LONGEST FLOWPATH FROM NODE    518.00 TO NODE    520.00 =     470.05 FEET.

****************************************************************************
  FLOW PROCESS FROM NODE    520.00 TO NODE    521.00 IS CODE =  51
----------------------------------------------------------------------------
  >>>>>COMPUTE TRAPEZOIDAL CHANNEL FLOW<<<<<
  >>>>>TRAVELTIME THRU SUBAREA (EXISTING ELEMENT)<<<<<
============================================================================
  ELEVATION DATA: UPSTREAM(FEET) =    693.00  DOWNSTREAM(FEET) =    652.00
  CHANNEL LENGTH THRU SUBAREA(FEET) =   468.55   CHANNEL SLOPE =  0.0875
  CHANNEL BASE(FEET) =    3.00   "Z" FACTOR =   2.000
  MANNING'S FACTOR = 0.030   MAXIMUM DEPTH(FEET) =  10.00
   100 YEAR RAINFALL INTENSITY(INCH/HOUR) =  5.957
  *USER SPECIFIED(SUBAREA):
  USER-SPECIFIED RUNOFF COEFFICIENT = .4100
  S.C.S. CURVE NUMBER (AMC II) =   0
```

```
  TRAVEL TIME COMPUTED USING ESTIMATED FLOW(CFS) =       3.94
  TRAVEL TIME THRU SUBAREA BASED ON VELOCITY(FEET/SEC.) =   4.90
  AVERAGE FLOW DEPTH(FEET) =   0.23   TRAVEL TIME(MIN.) =   1.59
  Tc(MIN.) =    8.57
  SUBAREA AREA(ACRES) =     0.89       SUBAREA RUNOFF(CFS) =    2.17
  AREA-AVERAGE RUNOFF COEFFICIENT =  0.410
  TOTAL AREA(ACRES) =        1.9         PEAK FLOW RATE(CFS) =       4.66

  END OF SUBAREA CHANNEL FLOW HYDRAULICS:
  DEPTH(FEET) =  0.25   FLOW VELOCITY(FEET/SEC.) =   5.22
  LONGEST FLOWPATH FROM NODE    518.00 TO NODE    521.00 =     938.60 FEET.

****************************************************************************
  FLOW PROCESS FROM NODE    521.00 TO NODE    517.00 IS CODE =  51
----------------------------------------------------------------------------
  >>>>>COMPUTE TRAPEZOIDAL CHANNEL FLOW<<<<<
  >>>>>TRAVELTIME THRU SUBAREA (EXISTING ELEMENT)<<<<<
============================================================================
  ELEVATION DATA: UPSTREAM(FEET) =    652.00  DOWNSTREAM(FEET) =    636.00
  CHANNEL LENGTH THRU SUBAREA(FEET) =   394.00   CHANNEL SLOPE =  0.0406
  CHANNEL BASE(FEET) =    3.00   "Z" FACTOR =   2.000
  MANNING'S FACTOR = 0.030   MAXIMUM DEPTH(FEET) =  10.00
   100 YEAR RAINFALL INTENSITY(INCH/HOUR) =  5.349
  *USER SPECIFIED(SUBAREA):
  USER-SPECIFIED RUNOFF COEFFICIENT = .4100
  S.C.S. CURVE NUMBER (AMC II) =   0
  TRAVEL TIME COMPUTED USING ESTIMATED FLOW(CFS) =       5.15
  TRAVEL TIME THRU SUBAREA BASED ON VELOCITY(FEET/SEC.) =   4.22
  AVERAGE FLOW DEPTH(FEET) =   0.33   TRAVEL TIME(MIN.) =   1.56
  Tc(MIN.) =   10.12
  SUBAREA AREA(ACRES) =     0.44       SUBAREA RUNOFF(CFS) =    0.96
  AREA-AVERAGE RUNOFF COEFFICIENT =  0.410
  TOTAL AREA(ACRES) =        2.3         PEAK FLOW RATE(CFS) =       5.15

  END OF SUBAREA CHANNEL FLOW HYDRAULICS:
  DEPTH(FEET) =  0.33   FLOW VELOCITY(FEET/SEC.) =   4.22
  LONGEST FLOWPATH FROM NODE    518.00 TO NODE    517.00 =    1332.60 FEET.

****************************************************************************
  FLOW PROCESS FROM NODE    517.00 TO NODE    517.00 IS CODE =   1
----------------------------------------------------------------------------
  >>>>>DESIGNATE INDEPENDENT STREAM FOR CONFLUENCE<<<<<
============================================================================
  TOTAL NUMBER OF STREAMS =  3
  CONFLUENCE VALUES USED FOR INDEPENDENT STREAM  2 ARE:
  TIME OF CONCENTRATION(MIN.) =   10.12
  RAINFALL INTENSITY(INCH/HR) =   5.35
  TOTAL STREAM AREA(ACRES) =     2.35
  PEAK FLOW RATE(CFS) AT CONFLUENCE =      5.15

****************************************************************************
  FLOW PROCESS FROM NODE    522.00 TO NODE    523.00 IS CODE =  21
----------------------------------------------------------------------------
  >>>>>RATIONAL METHOD INITIAL SUBAREA ANALYSIS<<<<<
============================================================================
  *USER SPECIFIED(SUBAREA):
  USER-SPECIFIED RUNOFF COEFFICIENT = .4100
  S.C.S. CURVE NUMBER (AMC II) =   0
  INITIAL SUBAREA FLOW-LENGTH(FEET) =    69.54
  UPSTREAM ELEVATION(FEET) =    639.00
  DOWNSTREAM ELEVATION(FEET) =    638.00
  ELEVATION DIFFERENCE(FEET) =      1.00
  SUBAREA OVERLAND TIME OF FLOW(MIN.) =    9.176
```

```
 100 YEAR RAINFALL INTENSITY(INCH/HOUR) =  5.699
SUBAREA RUNOFF(CFS) =      0.23
TOTAL AREA(ACRES) =      0.10   TOTAL RUNOFF(CFS) =      0.23

****************************************************************************
  FLOW PROCESS FROM NODE    523.00 TO NODE    524.00 IS CODE =  51
----------------------------------------------------------------------------
  >>>>>COMPUTE TRAPEZOIDAL CHANNEL FLOW<<<<<
  >>>>>TRAVELTIME THRU SUBAREA (EXISTING ELEMENT)<<<<<
============================================================================
  ELEVATION DATA: UPSTREAM(FEET) =    638.00  DOWNSTREAM(FEET) =    637.00
  CHANNEL LENGTH THRU SUBAREA(FEET) =    44.59   CHANNEL SLOPE =  0.0224
  CHANNEL BASE(FEET) =    3.00   "Z" FACTOR =   2.000
  MANNING'S FACTOR = 0.030   MAXIMUM DEPTH(FEET) =  10.00
   100 YEAR RAINFALL INTENSITY(INCH/HOUR) =  5.596
  *USER SPECIFIED(SUBAREA):
  USER-SPECIFIED RUNOFF COEFFICIENT = .4100
  S.C.S. CURVE NUMBER (AMC II) =   0
  TRAVEL TIME COMPUTED USING ESTIMATED FLOW(CFS) =       2.80
  TRAVEL TIME THRU SUBAREA BASED ON VELOCITY(FEET/SEC.) =   2.82
  AVERAGE FLOW DEPTH(FEET) =   0.28   TRAVEL TIME(MIN.) =   0.26
  Tc(MIN.) =    9.44
  SUBAREA AREA(ACRES) =     2.24       SUBAREA RUNOFF(CFS) =    5.14
  AREA-AVERAGE RUNOFF COEFFICIENT =  0.410
  TOTAL AREA(ACRES) =        2.3         PEAK FLOW RATE(CFS) =       5.37

  END OF SUBAREA CHANNEL FLOW HYDRAULICS:
  DEPTH(FEET) =  0.41   FLOW VELOCITY(FEET/SEC.) =   3.46
  LONGEST FLOWPATH FROM NODE    522.00 TO NODE    524.00 =     114.13 FEET.

****************************************************************************
  FLOW PROCESS FROM NODE    524.00 TO NODE    517.00 IS CODE =  51
----------------------------------------------------------------------------
  >>>>>COMPUTE TRAPEZOIDAL CHANNEL FLOW<<<<<
  >>>>>TRAVELTIME THRU SUBAREA (EXISTING ELEMENT)<<<<<
============================================================================
  ELEVATION DATA: UPSTREAM(FEET) =    637.00  DOWNSTREAM(FEET) =    636.00
  CHANNEL LENGTH THRU SUBAREA(FEET) =   272.68   CHANNEL SLOPE =  0.0037
  CHANNEL BASE(FEET) =    3.00   "Z" FACTOR =   2.000
  MANNING'S FACTOR = 0.030   MAXIMUM DEPTH(FEET) =  10.00
   100 YEAR RAINFALL INTENSITY(INCH/HOUR) =  4.905
  *USER SPECIFIED(SUBAREA):
  USER-SPECIFIED RUNOFF COEFFICIENT = .4100
  S.C.S. CURVE NUMBER (AMC II) =   0
  TRAVEL TIME COMPUTED USING ESTIMATED FLOW(CFS) =       8.61
  TRAVEL TIME THRU SUBAREA BASED ON VELOCITY(FEET/SEC.) =   2.12
  AVERAGE FLOW DEPTH(FEET) =   0.86   TRAVEL TIME(MIN.) =   2.14
  Tc(MIN.) =   11.58
  SUBAREA AREA(ACRES) =     3.22       SUBAREA RUNOFF(CFS) =    6.48
  AREA-AVERAGE RUNOFF COEFFICIENT =  0.410
  TOTAL AREA(ACRES) =        5.6         PEAK FLOW RATE(CFS) =      11.18

  END OF SUBAREA CHANNEL FLOW HYDRAULICS:
  DEPTH(FEET) =  0.99   FLOW VELOCITY(FEET/SEC.) =   2.28
  LONGEST FLOWPATH FROM NODE    522.00 TO NODE    517.00 =     386.81 FEET.

****************************************************************************
  FLOW PROCESS FROM NODE    517.00 TO NODE    517.00 IS CODE =   1
----------------------------------------------------------------------------
  >>>>>DESIGNATE INDEPENDENT STREAM FOR CONFLUENCE<<<<<
  >>>>>AND COMPUTE VARIOUS CONFLUENCED STREAM VALUES<<<<<
============================================================================
  TOTAL NUMBER OF STREAMS =  3
```

```
  CONFLUENCE VALUES USED FOR INDEPENDENT STREAM  3 ARE:
  TIME OF CONCENTRATION(MIN.) =   11.58
  RAINFALL INTENSITY(INCH/HR) =   4.91
  TOTAL STREAM AREA(ACRES) =     5.56
  PEAK FLOW RATE(CFS) AT CONFLUENCE =     11.18

  ** CONFLUENCE DATA **
  STREAM     RUNOFF       Tc      INTENSITY      AREA
  NUMBER      (CFS)     (MIN.)   (INCH/HOUR)    (ACRE)
      1       37.11    11.26        4.995         18.12
      2        5.15    10.12        5.349          2.35
      3       11.18    11.58        4.905          5.56

  RAINFALL INTENSITY AND TIME OF CONCENTRATION RATIO
  CONFLUENCE FORMULA USED FOR  3 STREAMS.

  ** PEAK FLOW RATE TABLE **
  STREAM     RUNOFF      Tc      INTENSITY
  NUMBER      (CFS)    (MIN.)   (INCH/HOUR)
      1       49.59    10.12       5.349
      2       52.79    11.26       4.995
      3       52.35    11.58       4.905

  COMPUTED CONFLUENCE ESTIMATES ARE AS FOLLOWS:
  PEAK FLOW RATE(CFS) =      52.79   Tc(MIN.) =   11.26
  TOTAL AREA(ACRES) =       26.0
  LONGEST FLOWPATH FROM NODE    510.00 TO NODE    517.00 =    2551.14 FEET.

****************************************************************************
  FLOW PROCESS FROM NODE    517.00 TO NODE    525.00 IS CODE =  51
----------------------------------------------------------------------------
  >>>>>COMPUTE TRAPEZOIDAL CHANNEL FLOW<<<<<
  >>>>>TRAVELTIME THRU SUBAREA (EXISTING ELEMENT)<<<<<
============================================================================
  ELEVATION DATA: UPSTREAM(FEET) =    636.00  DOWNSTREAM(FEET) =    630.00
  CHANNEL LENGTH THRU SUBAREA(FEET) =   264.20   CHANNEL SLOPE =  0.0227
  CHANNEL BASE(FEET) =    3.00   "Z" FACTOR =   2.000
  MANNING'S FACTOR = 0.030   MAXIMUM DEPTH(FEET) =  10.00
   100 YEAR RAINFALL INTENSITY(INCH/HOUR) =  4.817
  *USER SPECIFIED(SUBAREA):
  USER-SPECIFIED RUNOFF COEFFICIENT = .3500
  S.C.S. CURVE NUMBER (AMC II) =   0
  TRAVEL TIME COMPUTED USING ESTIMATED FLOW(CFS) =      53.05
  TRAVEL TIME THRU SUBAREA BASED ON VELOCITY(FEET/SEC.) =   6.76
  AVERAGE FLOW DEPTH(FEET) =   1.37   TRAVEL TIME(MIN.) =   0.65
  Tc(MIN.) =   11.91
  SUBAREA AREA(ACRES) =     0.30       SUBAREA RUNOFF(CFS) =    0.51
  AREA-AVERAGE RUNOFF COEFFICIENT =  0.409
  TOTAL AREA(ACRES) =       26.3         PEAK FLOW RATE(CFS) =      52.79

  END OF SUBAREA CHANNEL FLOW HYDRAULICS:
  DEPTH(FEET) =  1.36   FLOW VELOCITY(FEET/SEC.) =   6.77
  LONGEST FLOWPATH FROM NODE    510.00 TO NODE    525.00 =    2815.34 FEET.

****************************************************************************
  FLOW PROCESS FROM NODE    525.00 TO NODE    525.00 IS CODE =   1
----------------------------------------------------------------------------
  >>>>>DESIGNATE INDEPENDENT STREAM FOR CONFLUENCE<<<<<
============================================================================
  TOTAL NUMBER OF STREAMS =  3
  CONFLUENCE VALUES USED FOR INDEPENDENT STREAM  1 ARE:
  TIME OF CONCENTRATION(MIN.) =   11.91
  RAINFALL INTENSITY(INCH/HR) =   4.82
```

```
  TOTAL STREAM AREA(ACRES) =    26.33
  PEAK FLOW RATE(CFS) AT CONFLUENCE =     52.79

****************************************************************************
  FLOW PROCESS FROM NODE    526.00 TO NODE    527.00 IS CODE =  21
----------------------------------------------------------------------------
  >>>>>RATIONAL METHOD INITIAL SUBAREA ANALYSIS<<<<<
============================================================================
  *USER SPECIFIED(SUBAREA):
  USER-SPECIFIED RUNOFF COEFFICIENT = .4100
  S.C.S. CURVE NUMBER (AMC II) =   0
  INITIAL SUBAREA FLOW-LENGTH(FEET) =    99.04
  UPSTREAM ELEVATION(FEET) =    740.00
  DOWNSTREAM ELEVATION(FEET) =    735.00
  ELEVATION DIFFERENCE(FEET) =      5.00
  SUBAREA OVERLAND TIME OF FLOW(MIN.) =    7.205
   100 YEAR RAINFALL INTENSITY(INCH/HOUR) =  6.661
  SUBAREA RUNOFF(CFS) =      0.27
  TOTAL AREA(ACRES) =      0.10   TOTAL RUNOFF(CFS) =      0.27

****************************************************************************
  FLOW PROCESS FROM NODE    527.00 TO NODE    528.00 IS CODE =  51
----------------------------------------------------------------------------
  >>>>>COMPUTE TRAPEZOIDAL CHANNEL FLOW<<<<<
  >>>>>TRAVELTIME THRU SUBAREA (EXISTING ELEMENT)<<<<<
============================================================================
  ELEVATION DATA: UPSTREAM(FEET) =    735.00  DOWNSTREAM(FEET) =    684.00
  CHANNEL LENGTH THRU SUBAREA(FEET) =   495.32   CHANNEL SLOPE =  0.1030
  CHANNEL BASE(FEET) =    3.00   "Z" FACTOR =   2.000
  MANNING'S FACTOR = 0.030   MAXIMUM DEPTH(FEET) =  10.00
   100 YEAR RAINFALL INTENSITY(INCH/HOUR) =  5.667
  *USER SPECIFIED(SUBAREA):
  USER-SPECIFIED RUNOFF COEFFICIENT = .4100
  S.C.S. CURVE NUMBER (AMC II) =   0
  TRAVEL TIME COMPUTED USING ESTIMATED FLOW(CFS) =       1.96
  TRAVEL TIME THRU SUBAREA BASED ON VELOCITY(FEET/SEC.) =   4.03
  AVERAGE FLOW DEPTH(FEET) =   0.15   TRAVEL TIME(MIN.) =   2.05
  Tc(MIN.) =    9.26
  SUBAREA AREA(ACRES) =     1.44       SUBAREA RUNOFF(CFS) =    3.35
  AREA-AVERAGE RUNOFF COEFFICIENT =  0.410
  TOTAL AREA(ACRES) =        1.5         PEAK FLOW RATE(CFS) =       3.58

  END OF SUBAREA CHANNEL FLOW HYDRAULICS:
  DEPTH(FEET) =  0.21   FLOW VELOCITY(FEET/SEC.) =   5.01
  LONGEST FLOWPATH FROM NODE    526.00 TO NODE    528.00 =     594.36 FEET.

****************************************************************************
  FLOW PROCESS FROM NODE    528.00 TO NODE    530.00 IS CODE =  51
----------------------------------------------------------------------------
  >>>>>COMPUTE TRAPEZOIDAL CHANNEL FLOW<<<<<
  >>>>>TRAVELTIME THRU SUBAREA (EXISTING ELEMENT)<<<<<
============================================================================
  ELEVATION DATA: UPSTREAM(FEET) =    684.00  DOWNSTREAM(FEET) =    671.00
  CHANNEL LENGTH THRU SUBAREA(FEET) =   275.00   CHANNEL SLOPE =  0.0473
  CHANNEL BASE(FEET) =    3.00   "Z" FACTOR =   2.000
  MANNING'S FACTOR = 0.030   MAXIMUM DEPTH(FEET) =  10.00
   100 YEAR RAINFALL INTENSITY(INCH/HOUR) =  5.318
  *USER SPECIFIED(SUBAREA):
  USER-SPECIFIED RUNOFF COEFFICIENT = .4100
  S.C.S. CURVE NUMBER (AMC II) =   0
  TRAVEL TIME COMPUTED USING ESTIMATED FLOW(CFS) =       6.59
  TRAVEL TIME THRU SUBAREA BASED ON VELOCITY(FEET/SEC.) =   4.78
  AVERAGE FLOW DEPTH(FEET) =   0.37   TRAVEL TIME(MIN.) =   0.96
```

```
  Tc(MIN.) =   10.22
  SUBAREA AREA(ACRES) =     2.76       SUBAREA RUNOFF(CFS) =    6.02
  AREA-AVERAGE RUNOFF COEFFICIENT =  0.410
  TOTAL AREA(ACRES) =        4.3         PEAK FLOW RATE(CFS) =       9.38

  END OF SUBAREA CHANNEL FLOW HYDRAULICS:
  DEPTH(FEET) =  0.45   FLOW VELOCITY(FEET/SEC.) =   5.38
  LONGEST FLOWPATH FROM NODE    526.00 TO NODE    530.00 =     869.36 FEET.

****************************************************************************
  FLOW PROCESS FROM NODE    530.00 TO NODE    531.00 IS CODE =  51
----------------------------------------------------------------------------
  >>>>>COMPUTE TRAPEZOIDAL CHANNEL FLOW<<<<<
  >>>>>TRAVELTIME THRU SUBAREA (EXISTING ELEMENT)<<<<<
============================================================================
  ELEVATION DATA: UPSTREAM(FEET) =    671.00  DOWNSTREAM(FEET) =    645.00
  CHANNEL LENGTH THRU SUBAREA(FEET) =   449.12   CHANNEL SLOPE =  0.0579
  CHANNEL BASE(FEET) =    3.00   "Z" FACTOR =   2.000
  MANNING'S FACTOR = 0.030   MAXIMUM DEPTH(FEET) =  10.00
   100 YEAR RAINFALL INTENSITY(INCH/HOUR) =  4.952
  *USER SPECIFIED(SUBAREA):
  USER-SPECIFIED RUNOFF COEFFICIENT = .4100
  S.C.S. CURVE NUMBER (AMC II) =   0
  TRAVEL TIME COMPUTED USING ESTIMATED FLOW(CFS) =      12.33
  TRAVEL TIME THRU SUBAREA BASED ON VELOCITY(FEET/SEC.) =   6.27
  AVERAGE FLOW DEPTH(FEET) =   0.49   TRAVEL TIME(MIN.) =   1.19
  Tc(MIN.) =   11.41
  SUBAREA AREA(ACRES) =     2.91       SUBAREA RUNOFF(CFS) =    5.91
  AREA-AVERAGE RUNOFF COEFFICIENT =  0.410
  TOTAL AREA(ACRES) =        7.2         PEAK FLOW RATE(CFS) =      14.64

  END OF SUBAREA CHANNEL FLOW HYDRAULICS:
  DEPTH(FEET) =  0.54   FLOW VELOCITY(FEET/SEC.) =   6.57
  LONGEST FLOWPATH FROM NODE    526.00 TO NODE    531.00 =    1318.48 FEET.

****************************************************************************
  FLOW PROCESS FROM NODE    531.00 TO NODE    525.00 IS CODE =  51
----------------------------------------------------------------------------
  >>>>>COMPUTE TRAPEZOIDAL CHANNEL FLOW<<<<<
  >>>>>TRAVELTIME THRU SUBAREA (EXISTING ELEMENT)<<<<<
============================================================================
  ELEVATION DATA: UPSTREAM(FEET) =    645.00  DOWNSTREAM(FEET) =    630.00
  CHANNEL LENGTH THRU SUBAREA(FEET) =   374.99   CHANNEL SLOPE =  0.0400
  CHANNEL BASE(FEET) =    3.00   "Z" FACTOR =   2.000
  MANNING'S FACTOR = 0.030   MAXIMUM DEPTH(FEET) =  10.00
   100 YEAR RAINFALL INTENSITY(INCH/HOUR) =  4.679
  *USER SPECIFIED(SUBAREA):
  USER-SPECIFIED RUNOFF COEFFICIENT = .3500
  S.C.S. CURVE NUMBER (AMC II) =   0
  TRAVEL TIME COMPUTED USING ESTIMATED FLOW(CFS) =      16.02
  TRAVEL TIME THRU SUBAREA BASED ON VELOCITY(FEET/SEC.) =   5.97
  AVERAGE FLOW DEPTH(FEET) =   0.63   TRAVEL TIME(MIN.) =   1.05
  Tc(MIN.) =   12.46
  SUBAREA AREA(ACRES) =     1.69       SUBAREA RUNOFF(CFS) =    2.77
  AREA-AVERAGE RUNOFF COEFFICIENT =  0.399
  TOTAL AREA(ACRES) =        8.9         PEAK FLOW RATE(CFS) =      16.60

  END OF SUBAREA CHANNEL FLOW HYDRAULICS:
  DEPTH(FEET) =  0.65   FLOW VELOCITY(FEET/SEC.) =   5.99
  LONGEST FLOWPATH FROM NODE    526.00 TO NODE    525.00 =    1693.47 FEET.

****************************************************************************
  FLOW PROCESS FROM NODE    525.00 TO NODE    525.00 IS CODE =   1
```

```
----------------------------------------------------------------------------
  >>>>>DESIGNATE INDEPENDENT STREAM FOR CONFLUENCE<<<<<
============================================================================
  TOTAL NUMBER OF STREAMS =  3
  CONFLUENCE VALUES USED FOR INDEPENDENT STREAM  2 ARE:
  TIME OF CONCENTRATION(MIN.) =   12.46
  RAINFALL INTENSITY(INCH/HR) =   4.68
  TOTAL STREAM AREA(ACRES) =     8.90
  PEAK FLOW RATE(CFS) AT CONFLUENCE =     16.60

****************************************************************************
  FLOW PROCESS FROM NODE    532.00 TO NODE    533.00 IS CODE =  21
----------------------------------------------------------------------------
  >>>>>RATIONAL METHOD INITIAL SUBAREA ANALYSIS<<<<<
============================================================================
  *USER SPECIFIED(SUBAREA):
  USER-SPECIFIED RUNOFF COEFFICIENT = .4100
  S.C.S. CURVE NUMBER (AMC II) =   0
  INITIAL SUBAREA FLOW-LENGTH(FEET) =    79.93
  UPSTREAM ELEVATION(FEET) =    719.00
  DOWNSTREAM ELEVATION(FEET) =    703.00
  ELEVATION DIFFERENCE(FEET) =     16.00
  SUBAREA OVERLAND TIME OF FLOW(MIN.) =    5.154
  WARNING: THE MAXIMUM OVERLAND FLOW SLOPE, 10.%, IS USED IN Tc CALCULATION!
   100 YEAR RAINFALL INTENSITY(INCH/HOUR) =  8.267
  SUBAREA RUNOFF(CFS) =      0.34
  TOTAL AREA(ACRES) =      0.10   TOTAL RUNOFF(CFS) =      0.34

****************************************************************************
  FLOW PROCESS FROM NODE    533.00 TO NODE    534.00 IS CODE =  51
----------------------------------------------------------------------------
  >>>>>COMPUTE TRAPEZOIDAL CHANNEL FLOW<<<<<
  >>>>>TRAVELTIME THRU SUBAREA (EXISTING ELEMENT)<<<<<
============================================================================
  ELEVATION DATA: UPSTREAM(FEET) =    703.00  DOWNSTREAM(FEET) =    638.00
  CHANNEL LENGTH THRU SUBAREA(FEET) =   512.58   CHANNEL SLOPE =  0.1268
  CHANNEL BASE(FEET) =    3.00   "Z" FACTOR =   2.000
  MANNING'S FACTOR = 0.030   MAXIMUM DEPTH(FEET) =  10.00
   100 YEAR RAINFALL INTENSITY(INCH/HOUR) =  6.943
  *USER SPECIFIED(SUBAREA):
  USER-SPECIFIED RUNOFF COEFFICIENT = .4100
  S.C.S. CURVE NUMBER (AMC II) =   0
  TRAVEL TIME COMPUTED USING ESTIMATED FLOW(CFS) =       3.50
  TRAVEL TIME THRU SUBAREA BASED ON VELOCITY(FEET/SEC.) =   5.33
  AVERAGE FLOW DEPTH(FEET) =   0.19   TRAVEL TIME(MIN.) =   1.60
  Tc(MIN.) =    6.76
  SUBAREA AREA(ACRES) =     2.20       SUBAREA RUNOFF(CFS) =    6.26
  AREA-AVERAGE RUNOFF COEFFICIENT =  0.410
  TOTAL AREA(ACRES) =        2.3         PEAK FLOW RATE(CFS) =       6.55

  END OF SUBAREA CHANNEL FLOW HYDRAULICS:
  DEPTH(FEET) =  0.28   FLOW VELOCITY(FEET/SEC.) =   6.64
  LONGEST FLOWPATH FROM NODE    532.00 TO NODE    534.00 =     592.51 FEET.

****************************************************************************
  FLOW PROCESS FROM NODE    534.00 TO NODE    525.00 IS CODE =  51
----------------------------------------------------------------------------
  >>>>>COMPUTE TRAPEZOIDAL CHANNEL FLOW<<<<<
  >>>>>TRAVELTIME THRU SUBAREA (EXISTING ELEMENT)<<<<<
============================================================================
  ELEVATION DATA: UPSTREAM(FEET) =    638.00  DOWNSTREAM(FEET) =    630.00
  CHANNEL LENGTH THRU SUBAREA(FEET) =   355.49   CHANNEL SLOPE =  0.0225
  CHANNEL BASE(FEET) =    3.00   "Z" FACTOR =   2.000
```

```
  MANNING'S FACTOR = 0.030   MAXIMUM DEPTH(FEET) =  10.00
   100 YEAR RAINFALL INTENSITY(INCH/HOUR) =  6.106
  *USER SPECIFIED(SUBAREA):
  USER-SPECIFIED RUNOFF COEFFICIENT = .3500
  S.C.S. CURVE NUMBER (AMC II) =   0
  TRAVEL TIME COMPUTED USING ESTIMATED FLOW(CFS) =       8.39
  TRAVEL TIME THRU SUBAREA BASED ON VELOCITY(FEET/SEC.) =   3.98
  AVERAGE FLOW DEPTH(FEET) =   0.52   TRAVEL TIME(MIN.) =   1.49
  Tc(MIN.) =    8.25
  SUBAREA AREA(ACRES) =     1.72       SUBAREA RUNOFF(CFS) =    3.68
  AREA-AVERAGE RUNOFF COEFFICIENT =  0.384
  TOTAL AREA(ACRES) =        4.0         PEAK FLOW RATE(CFS) =       9.43

  END OF SUBAREA CHANNEL FLOW HYDRAULICS:
  DEPTH(FEET) =  0.55   FLOW VELOCITY(FEET/SEC.) =   4.14
  LONGEST FLOWPATH FROM NODE    532.00 TO NODE    525.00 =     948.00 FEET.

****************************************************************************
  FLOW PROCESS FROM NODE    525.00 TO NODE    525.00 IS CODE =   1
----------------------------------------------------------------------------
  >>>>>DESIGNATE INDEPENDENT STREAM FOR CONFLUENCE<<<<<
  >>>>>AND COMPUTE VARIOUS CONFLUENCED STREAM VALUES<<<<<
============================================================================
  TOTAL NUMBER OF STREAMS =  3
  CONFLUENCE VALUES USED FOR INDEPENDENT STREAM  3 ARE:
  TIME OF CONCENTRATION(MIN.) =    8.25
  RAINFALL INTENSITY(INCH/HR) =   6.11
  TOTAL STREAM AREA(ACRES) =     4.02
  PEAK FLOW RATE(CFS) AT CONFLUENCE =      9.43

  ** CONFLUENCE DATA **
  STREAM     RUNOFF       Tc      INTENSITY      AREA
  NUMBER      (CFS)     (MIN.)   (INCH/HOUR)    (ACRE)
      1       52.79    11.91        4.817         26.33
      2       16.60    12.46        4.679          8.90
      3        9.43     8.25        6.106          4.02

  RAINFALL INTENSITY AND TIME OF CONCENTRATION RATIO
  CONFLUENCE FORMULA USED FOR  3 STREAMS.

  ** PEAK FLOW RATE TABLE **
  STREAM     RUNOFF      Tc      INTENSITY
  NUMBER      (CFS)    (MIN.)   (INCH/HOUR)
      1       62.07     8.25       6.106
      2       76.11    11.91       4.817
      3       75.11    12.46       4.679

  COMPUTED CONFLUENCE ESTIMATES ARE AS FOLLOWS:
  PEAK FLOW RATE(CFS) =      76.11   Tc(MIN.) =   11.91
  TOTAL AREA(ACRES) =       39.2
  LONGEST FLOWPATH FROM NODE    510.00 TO NODE    525.00 =    2815.34 FEET.

****************************************************************************
  FLOW PROCESS FROM NODE    525.00 TO NODE    535.00 IS CODE =  51
----------------------------------------------------------------------------
  >>>>>COMPUTE TRAPEZOIDAL CHANNEL FLOW<<<<<
  >>>>>TRAVELTIME THRU SUBAREA (EXISTING ELEMENT)<<<<<
============================================================================
  ELEVATION DATA: UPSTREAM(FEET) =    630.00  DOWNSTREAM(FEET) =    628.00
  CHANNEL LENGTH THRU SUBAREA(FEET) =   164.54   CHANNEL SLOPE =  0.0122
  CHANNEL BASE(FEET) =    3.00   "Z" FACTOR =   2.000
  MANNING'S FACTOR = 0.030   MAXIMUM DEPTH(FEET) =  10.00
   100 YEAR RAINFALL INTENSITY(INCH/HOUR) =  4.700
```

```
  *USER SPECIFIED(SUBAREA):
  USER-SPECIFIED RUNOFF COEFFICIENT = .3500
  S.C.S. CURVE NUMBER (AMC II) =   0
  TRAVEL TIME COMPUTED USING ESTIMATED FLOW(CFS) =      76.80
  TRAVEL TIME THRU SUBAREA BASED ON VELOCITY(FEET/SEC.) =   5.92
  AVERAGE FLOW DEPTH(FEET) =   1.90   TRAVEL TIME(MIN.) =   0.46
  Tc(MIN.) =   12.37
  SUBAREA AREA(ACRES) =     0.84       SUBAREA RUNOFF(CFS) =    1.38
  AREA-AVERAGE RUNOFF COEFFICIENT =  0.403
  TOTAL AREA(ACRES) =       40.1         PEAK FLOW RATE(CFS) =      76.11

  END OF SUBAREA CHANNEL FLOW HYDRAULICS:
  DEPTH(FEET) =  1.90   FLOW VELOCITY(FEET/SEC.) =   5.91
  LONGEST FLOWPATH FROM NODE    510.00 TO NODE    535.00 =    2979.88 FEET.

****************************************************************************
  FLOW PROCESS FROM NODE    535.00 TO NODE    535.00 IS CODE =  10
----------------------------------------------------------------------------
  >>>>>MAIN-STREAM MEMORY COPIED ONTO MEMORY BANK # 1 <<<<<
============================================================================

****************************************************************************
  FLOW PROCESS FROM NODE    536.00 TO NODE    537.00 IS CODE =  21
----------------------------------------------------------------------------
  >>>>>RATIONAL METHOD INITIAL SUBAREA ANALYSIS<<<<<
============================================================================
  *USER SPECIFIED(SUBAREA):
  USER-SPECIFIED RUNOFF COEFFICIENT = .4100
  S.C.S. CURVE NUMBER (AMC II) =   0
  INITIAL SUBAREA FLOW-LENGTH(FEET) =   103.67
  UPSTREAM ELEVATION(FEET) =    724.00
  DOWNSTREAM ELEVATION(FEET) =    701.00
  ELEVATION DIFFERENCE(FEET) =     23.00
  SUBAREA OVERLAND TIME OF FLOW(MIN.) =    5.765
  WARNING: INITIAL SUBAREA FLOW PATH LENGTH IS GREATER THAN
           THE MAXIMUM OVERLAND FLOW LENGTH =   100.00
           (Reference: Table 3-1B of Hydrology Manual)
           THE MAXIMUM OVERLAND FLOW LENGTH IS USED IN Tc CALCULATION!
   100 YEAR RAINFALL INTENSITY(INCH/HOUR) =  7.691
  SUBAREA RUNOFF(CFS) =      0.32
  TOTAL AREA(ACRES) =      0.10   TOTAL RUNOFF(CFS) =      0.32

****************************************************************************
  FLOW PROCESS FROM NODE    537.00 TO NODE    538.00 IS CODE =  51
----------------------------------------------------------------------------
  >>>>>COMPUTE TRAPEZOIDAL CHANNEL FLOW<<<<<
  >>>>>TRAVELTIME THRU SUBAREA (EXISTING ELEMENT)<<<<<
============================================================================
  ELEVATION DATA: UPSTREAM(FEET) =    701.00  DOWNSTREAM(FEET) =    654.00
  CHANNEL LENGTH THRU SUBAREA(FEET) =   399.13   CHANNEL SLOPE =  0.1178
  CHANNEL BASE(FEET) =    3.00   "Z" FACTOR =   2.000
  MANNING'S FACTOR = 0.030   MAXIMUM DEPTH(FEET) =  10.00
   100 YEAR RAINFALL INTENSITY(INCH/HOUR) =  6.748
  *USER SPECIFIED(SUBAREA):
  USER-SPECIFIED RUNOFF COEFFICIENT = .4100
  S.C.S. CURVE NUMBER (AMC II) =   0
  TRAVEL TIME COMPUTED USING ESTIMATED FLOW(CFS) =       3.22
  TRAVEL TIME THRU SUBAREA BASED ON VELOCITY(FEET/SEC.) =   5.13
  AVERAGE FLOW DEPTH(FEET) =   0.19   TRAVEL TIME(MIN.) =   1.30
  Tc(MIN.) =    7.06
  SUBAREA AREA(ACRES) =     2.09       SUBAREA RUNOFF(CFS) =    5.78
  AREA-AVERAGE RUNOFF COEFFICIENT =  0.410
  TOTAL AREA(ACRES) =        2.2         PEAK FLOW RATE(CFS) =       6.06
```

```
  END OF SUBAREA CHANNEL FLOW HYDRAULICS:
  DEPTH(FEET) =  0.27   FLOW VELOCITY(FEET/SEC.) =   6.34
  LONGEST FLOWPATH FROM NODE    536.00 TO NODE    538.00 =     502.80 FEET.

****************************************************************************
  FLOW PROCESS FROM NODE    538.00 TO NODE    538.00 IS CODE =   1
----------------------------------------------------------------------------
  >>>>>DESIGNATE INDEPENDENT STREAM FOR CONFLUENCE<<<<<
============================================================================
  TOTAL NUMBER OF STREAMS =  2
  CONFLUENCE VALUES USED FOR INDEPENDENT STREAM  1 ARE:
  TIME OF CONCENTRATION(MIN.) =    7.06
  RAINFALL INTENSITY(INCH/HR) =   6.75
  TOTAL STREAM AREA(ACRES) =     2.19
  PEAK FLOW RATE(CFS) AT CONFLUENCE =      6.06

****************************************************************************
  FLOW PROCESS FROM NODE    538.00 TO NODE    538.00 IS CODE =   7
----------------------------------------------------------------------------
  >>>>>USER SPECIFIED HYDROLOGY INFORMATION AT NODE<<<<<
============================================================================
  USER-SPECIFIED VALUES ARE AS FOLLOWS:
  TC(MIN) =  13.79   RAIN INTENSITY(INCH/HOUR) =  4.38
  TOTAL AREA(ACRES) =    70.50   TOTAL RUNOFF(CFS) =    116.32

****************************************************************************
  FLOW PROCESS FROM NODE    538.00 TO NODE    538.00 IS CODE =   1
----------------------------------------------------------------------------
  >>>>>DESIGNATE INDEPENDENT STREAM FOR CONFLUENCE<<<<<
  >>>>>AND COMPUTE VARIOUS CONFLUENCED STREAM VALUES<<<<<
============================================================================
  TOTAL NUMBER OF STREAMS =  2
  CONFLUENCE VALUES USED FOR INDEPENDENT STREAM  2 ARE:
  TIME OF CONCENTRATION(MIN.) =   13.79
  RAINFALL INTENSITY(INCH/HR) =   4.38
  TOTAL STREAM AREA(ACRES) =    70.50
  PEAK FLOW RATE(CFS) AT CONFLUENCE =    116.32

  ** CONFLUENCE DATA **
  STREAM     RUNOFF       Tc      INTENSITY      AREA
  NUMBER      (CFS)     (MIN.)   (INCH/HOUR)    (ACRE)
      1        6.06     7.06        6.748          2.19
      2      116.32    13.79        4.382         70.50

  RAINFALL INTENSITY AND TIME OF CONCENTRATION RATIO
  CONFLUENCE FORMULA USED FOR  2 STREAMS.

  ** PEAK FLOW RATE TABLE **
  STREAM     RUNOFF      Tc      INTENSITY
  NUMBER      (CFS)    (MIN.)   (INCH/HOUR)
      1       65.63     7.06       6.748
      2      120.25    13.79       4.382

  COMPUTED CONFLUENCE ESTIMATES ARE AS FOLLOWS:
  PEAK FLOW RATE(CFS) =     120.25   Tc(MIN.) =   13.79
  TOTAL AREA(ACRES) =       72.7
  LONGEST FLOWPATH FROM NODE    526.00 TO NODE    538.00 =    1693.47 FEET.

****************************************************************************
  FLOW PROCESS FROM NODE    538.00 TO NODE    539.00 IS CODE =  51
----------------------------------------------------------------------------
  >>>>>COMPUTE TRAPEZOIDAL CHANNEL FLOW<<<<<
```

```
  >>>>>TRAVELTIME THRU SUBAREA (EXISTING ELEMENT)<<<<<
================================================================================
  ELEVATION DATA: UPSTREAM(FEET) =    654.00  DOWNSTREAM(FEET) =    649.00
  CHANNEL LENGTH THRU SUBAREA(FEET) =   225.33   CHANNEL SLOPE =  0.0222
  CHANNEL BASE(FEET) =    3.00   "Z" FACTOR =   2.000
  MANNING'S FACTOR = 0.030   MAXIMUM DEPTH(FEET) =  10.00
   100 YEAR RAINFALL INTENSITY(INCH/HOUR) =  4.292
  *USER SPECIFIED(SUBAREA):
  USER-SPECIFIED RUNOFF COEFFICIENT = .4100
  S.C.S. CURVE NUMBER (AMC II) =   0
  TRAVEL TIME COMPUTED USING ESTIMATED FLOW(CFS) =     120.62
  TRAVEL TIME THRU SUBAREA BASED ON VELOCITY(FEET/SEC.) =   8.30
  AVERAGE FLOW DEPTH(FEET) =   2.05   TRAVEL TIME(MIN.) =   0.45
  Tc(MIN.) =   14.24
  SUBAREA AREA(ACRES) =     0.42       SUBAREA RUNOFF(CFS) =    0.74
  AREA-AVERAGE RUNOFF COEFFICIENT =  0.378
  TOTAL AREA(ACRES) =       73.1         PEAK FLOW RATE(CFS) =     120.25

  END OF SUBAREA CHANNEL FLOW HYDRAULICS:
  DEPTH(FEET) =  2.04   FLOW VELOCITY(FEET/SEC.) =   8.31
  LONGEST FLOWPATH FROM NODE    526.00 TO NODE    539.00 =    1918.80 FEET.

****************************************************************************
  FLOW PROCESS FROM NODE    539.00 TO NODE    539.00 IS CODE =   1
----------------------------------------------------------------------------
  >>>>>DESIGNATE INDEPENDENT STREAM FOR CONFLUENCE<<<<<
================================================================================
  TOTAL NUMBER OF STREAMS =  2
  CONFLUENCE VALUES USED FOR INDEPENDENT STREAM  1 ARE:
  TIME OF CONCENTRATION(MIN.) =   14.24
  RAINFALL INTENSITY(INCH/HR) =   4.29
  TOTAL STREAM AREA(ACRES) =    73.11
  PEAK FLOW RATE(CFS) AT CONFLUENCE =    120.25

****************************************************************************
  FLOW PROCESS FROM NODE    540.00 TO NODE    541.00 IS CODE =  21
----------------------------------------------------------------------------
  >>>>>RATIONAL METHOD INITIAL SUBAREA ANALYSIS<<<<<
================================================================================
  *USER SPECIFIED(SUBAREA):
  USER-SPECIFIED RUNOFF COEFFICIENT = .4100
  S.C.S. CURVE NUMBER (AMC II) =   0
  INITIAL SUBAREA FLOW-LENGTH(FEET) =    99.75
  UPSTREAM ELEVATION(FEET) =    785.00
  DOWNSTREAM ELEVATION(FEET) =    782.00
  ELEVATION DIFFERENCE(FEET) =      3.00
  SUBAREA OVERLAND TIME OF FLOW(MIN.) =    8.594
   100 YEAR RAINFALL INTENSITY(INCH/HOUR) =  5.945
  SUBAREA RUNOFF(CFS) =      0.24
  TOTAL AREA(ACRES) =      0.10   TOTAL RUNOFF(CFS) =      0.24

****************************************************************************
  FLOW PROCESS FROM NODE    541.00 TO NODE    542.00 IS CODE =  51
----------------------------------------------------------------------------
  >>>>>COMPUTE TRAPEZOIDAL CHANNEL FLOW<<<<<
  >>>>>TRAVELTIME THRU SUBAREA (EXISTING ELEMENT)<<<<<
================================================================================
  ELEVATION DATA: UPSTREAM(FEET) =    782.00  DOWNSTREAM(FEET) =    758.00
  CHANNEL LENGTH THRU SUBAREA(FEET) =   193.80   CHANNEL SLOPE =  0.1238
  CHANNEL BASE(FEET) =    3.00   "Z" FACTOR =   2.000
  MANNING'S FACTOR = 0.030   MAXIMUM DEPTH(FEET) =  10.00
   100 YEAR RAINFALL INTENSITY(INCH/HOUR) =  5.571
  *USER SPECIFIED(SUBAREA):
```

```
  USER-SPECIFIED RUNOFF COEFFICIENT = .4100
  S.C.S. CURVE NUMBER (AMC II) =   0
  TRAVEL TIME COMPUTED USING ESTIMATED FLOW(CFS) =       1.16
  TRAVEL TIME THRU SUBAREA BASED ON VELOCITY(FEET/SEC.) =   3.55
  AVERAGE FLOW DEPTH(FEET) =   0.10   TRAVEL TIME(MIN.) =   0.91
  Tc(MIN.) =    9.51
  SUBAREA AREA(ACRES) =     0.80       SUBAREA RUNOFF(CFS) =    1.83
  AREA-AVERAGE RUNOFF COEFFICIENT =  0.410
  TOTAL AREA(ACRES) =        0.9         PEAK FLOW RATE(CFS) =       2.06

  END OF SUBAREA CHANNEL FLOW HYDRAULICS:
  DEPTH(FEET) =  0.14   FLOW VELOCITY(FEET/SEC.) =   4.41
  LONGEST FLOWPATH FROM NODE    540.00 TO NODE    542.00 =     293.55 FEET.

****************************************************************************
  FLOW PROCESS FROM NODE    542.00 TO NODE    543.00 IS CODE =  51
----------------------------------------------------------------------------
  >>>>>COMPUTE TRAPEZOIDAL CHANNEL FLOW<<<<<
  >>>>>TRAVELTIME THRU SUBAREA (EXISTING ELEMENT)<<<<<
============================================================================
  ELEVATION DATA: UPSTREAM(FEET) =    758.00  DOWNSTREAM(FEET) =    720.00
  CHANNEL LENGTH THRU SUBAREA(FEET) =   291.62   CHANNEL SLOPE =  0.1303
  CHANNEL BASE(FEET) =    3.00   "Z" FACTOR =   2.000
  MANNING'S FACTOR = 0.015   MAXIMUM DEPTH(FEET) =  10.00
   100 YEAR RAINFALL INTENSITY(INCH/HOUR) =  5.394
  *USER SPECIFIED(SUBAREA):
  USER-SPECIFIED RUNOFF COEFFICIENT = .4100
  S.C.S. CURVE NUMBER (AMC II) =   0
  TRAVEL TIME COMPUTED USING ESTIMATED FLOW(CFS) =       5.21
  TRAVEL TIME THRU SUBAREA BASED ON VELOCITY(FEET/SEC.) =   9.98
  AVERAGE FLOW DEPTH(FEET) =   0.16   TRAVEL TIME(MIN.) =   0.49
  Tc(MIN.) =    9.99
  SUBAREA AREA(ACRES) =     2.85       SUBAREA RUNOFF(CFS) =    6.30
  AREA-AVERAGE RUNOFF COEFFICIENT =  0.410
  TOTAL AREA(ACRES) =        3.8         PEAK FLOW RATE(CFS) =       8.29

  END OF SUBAREA CHANNEL FLOW HYDRAULICS:
  DEPTH(FEET) =  0.21   FLOW VELOCITY(FEET/SEC.) =  11.50
  LONGEST FLOWPATH FROM NODE    540.00 TO NODE    543.00 =     585.17 FEET.

****************************************************************************
  FLOW PROCESS FROM NODE    543.00 TO NODE    544.00 IS CODE =  51
----------------------------------------------------------------------------
  >>>>>COMPUTE TRAPEZOIDAL CHANNEL FLOW<<<<<
  >>>>>TRAVELTIME THRU SUBAREA (EXISTING ELEMENT)<<<<<
============================================================================
  ELEVATION DATA: UPSTREAM(FEET) =    720.00  DOWNSTREAM(FEET) =    673.00
  CHANNEL LENGTH THRU SUBAREA(FEET) =   302.81   CHANNEL SLOPE =  0.1552
  CHANNEL BASE(FEET) =    3.00   "Z" FACTOR =   2.000
  MANNING'S FACTOR = 0.030   MAXIMUM DEPTH(FEET) =  10.00
   100 YEAR RAINFALL INTENSITY(INCH/HOUR) =  5.196
  *USER SPECIFIED(SUBAREA):
  USER-SPECIFIED RUNOFF COEFFICIENT = .4100
  S.C.S. CURVE NUMBER (AMC II) =   0
  TRAVEL TIME COMPUTED USING ESTIMATED FLOW(CFS) =      11.07
  TRAVEL TIME THRU SUBAREA BASED ON VELOCITY(FEET/SEC.) =   8.44
  AVERAGE FLOW DEPTH(FEET) =   0.35   TRAVEL TIME(MIN.) =   0.60
  Tc(MIN.) =   10.59
  SUBAREA AREA(ACRES) =     2.61       SUBAREA RUNOFF(CFS) =    5.56
  AREA-AVERAGE RUNOFF COEFFICIENT =  0.410
  TOTAL AREA(ACRES) =        6.4         PEAK FLOW RATE(CFS) =      13.55

  END OF SUBAREA CHANNEL FLOW HYDRAULICS:
```

```
  DEPTH(FEET) =  0.39   FLOW VELOCITY(FEET/SEC.) =   9.08
  LONGEST FLOWPATH FROM NODE    540.00 TO NODE    544.00 =     887.98 FEET.

****************************************************************************
  FLOW PROCESS FROM NODE    544.00 TO NODE    539.00 IS CODE =  51
----------------------------------------------------------------------------
  >>>>>COMPUTE TRAPEZOIDAL CHANNEL FLOW<<<<<
  >>>>>TRAVELTIME THRU SUBAREA (EXISTING ELEMENT)<<<<<
============================================================================
  ELEVATION DATA: UPSTREAM(FEET) =    673.00  DOWNSTREAM(FEET) =    649.00
  CHANNEL LENGTH THRU SUBAREA(FEET) =   288.26   CHANNEL SLOPE =  0.0833
  CHANNEL BASE(FEET) =    3.00   "Z" FACTOR =   2.000
  MANNING'S FACTOR = 0.030   MAXIMUM DEPTH(FEET) =  10.00
   100 YEAR RAINFALL INTENSITY(INCH/HOUR) =  5.000
  *USER SPECIFIED(SUBAREA):
  USER-SPECIFIED RUNOFF COEFFICIENT = .4100
  S.C.S. CURVE NUMBER (AMC II) =   0
  TRAVEL TIME COMPUTED USING ESTIMATED FLOW(CFS) =      14.44
  TRAVEL TIME THRU SUBAREA BASED ON VELOCITY(FEET/SEC.) =   7.38
  AVERAGE FLOW DEPTH(FEET) =   0.49   TRAVEL TIME(MIN.) =   0.65
  Tc(MIN.) =   11.24
  SUBAREA AREA(ACRES) =     0.87       SUBAREA RUNOFF(CFS) =    1.78
  AREA-AVERAGE RUNOFF COEFFICIENT =  0.410
  TOTAL AREA(ACRES) =        7.2         PEAK FLOW RATE(CFS) =      14.82

  END OF SUBAREA CHANNEL FLOW HYDRAULICS:
  DEPTH(FEET) =  0.49   FLOW VELOCITY(FEET/SEC.) =   7.54
  LONGEST FLOWPATH FROM NODE    540.00 TO NODE    539.00 =    1176.24 FEET.

****************************************************************************
  FLOW PROCESS FROM NODE    539.00 TO NODE    539.00 IS CODE =   1
----------------------------------------------------------------------------
  >>>>>DESIGNATE INDEPENDENT STREAM FOR CONFLUENCE<<<<<
  >>>>>AND COMPUTE VARIOUS CONFLUENCED STREAM VALUES<<<<<
============================================================================
  TOTAL NUMBER OF STREAMS =  2
  CONFLUENCE VALUES USED FOR INDEPENDENT STREAM  2 ARE:
  TIME OF CONCENTRATION(MIN.) =   11.24
  RAINFALL INTENSITY(INCH/HR) =   5.00
  TOTAL STREAM AREA(ACRES) =     7.23
  PEAK FLOW RATE(CFS) AT CONFLUENCE =     14.82

  ** CONFLUENCE DATA **
  STREAM     RUNOFF       Tc      INTENSITY      AREA
  NUMBER      (CFS)     (MIN.)   (INCH/HOUR)    (ACRE)
      1      120.25    14.24        4.292         73.11
      2       14.82    11.24        5.000          7.23

  RAINFALL INTENSITY AND TIME OF CONCENTRATION RATIO
  CONFLUENCE FORMULA USED FOR  2 STREAMS.

  ** PEAK FLOW RATE TABLE **
  STREAM     RUNOFF      Tc      INTENSITY
  NUMBER      (CFS)    (MIN.)   (INCH/HOUR)
      1      118.05    11.24       5.000
      2      132.98    14.24       4.292

  COMPUTED CONFLUENCE ESTIMATES ARE AS FOLLOWS:
  PEAK FLOW RATE(CFS) =     132.98   Tc(MIN.) =   14.24
  TOTAL AREA(ACRES) =       80.3
  LONGEST FLOWPATH FROM NODE    526.00 TO NODE    539.00 =    1918.80 FEET.

****************************************************************************
```

```
  FLOW PROCESS FROM NODE    539.00 TO NODE    545.00 IS CODE =  51
----------------------------------------------------------------------------
  >>>>>COMPUTE TRAPEZOIDAL CHANNEL FLOW<<<<<
  >>>>>TRAVELTIME THRU SUBAREA (EXISTING ELEMENT)<<<<<
============================================================================
  ELEVATION DATA: UPSTREAM(FEET) =    649.00  DOWNSTREAM(FEET) =    633.00
  CHANNEL LENGTH THRU SUBAREA(FEET) =   430.22   CHANNEL SLOPE =  0.0372
  CHANNEL BASE(FEET) =    3.00   "Z" FACTOR =   2.000
  MANNING'S FACTOR = 0.030   MAXIMUM DEPTH(FEET) =  10.00
   100 YEAR RAINFALL INTENSITY(INCH/HOUR) =  4.162
  *USER SPECIFIED(SUBAREA):
  USER-SPECIFIED RUNOFF COEFFICIENT = .3500
  S.C.S. CURVE NUMBER (AMC II) =   0
  TRAVEL TIME COMPUTED USING ESTIMATED FLOW(CFS) =     134.07
  TRAVEL TIME THRU SUBAREA BASED ON VELOCITY(FEET/SEC.) =  10.34
  AVERAGE FLOW DEPTH(FEET) =   1.90   TRAVEL TIME(MIN.) =   0.69
  Tc(MIN.) =   14.94
  SUBAREA AREA(ACRES) =     1.50       SUBAREA RUNOFF(CFS) =    2.19
  AREA-AVERAGE RUNOFF COEFFICIENT =  0.380
  TOTAL AREA(ACRES) =       81.8         PEAK FLOW RATE(CFS) =     132.98

  END OF SUBAREA CHANNEL FLOW HYDRAULICS:
  DEPTH(FEET) =  1.90   FLOW VELOCITY(FEET/SEC.) =  10.32
  LONGEST FLOWPATH FROM NODE    526.00 TO NODE    545.00 =    2349.02 FEET.

****************************************************************************
  FLOW PROCESS FROM NODE    545.00 TO NODE    535.00 IS CODE =  51
----------------------------------------------------------------------------
  >>>>>COMPUTE TRAPEZOIDAL CHANNEL FLOW<<<<<
  >>>>>TRAVELTIME THRU SUBAREA (EXISTING ELEMENT)<<<<<
============================================================================
  ELEVATION DATA: UPSTREAM(FEET) =    633.00  DOWNSTREAM(FEET) =    628.00
  CHANNEL LENGTH THRU SUBAREA(FEET) =   190.00   CHANNEL SLOPE =  0.0263
  CHANNEL BASE(FEET) =    3.00   "Z" FACTOR =   2.000
  MANNING'S FACTOR = 0.030   MAXIMUM DEPTH(FEET) =  10.00
   100 YEAR RAINFALL INTENSITY(INCH/HOUR) =  4.101
  *USER SPECIFIED(SUBAREA):
  USER-SPECIFIED RUNOFF COEFFICIENT = .3500
  S.C.S. CURVE NUMBER (AMC II) =   0
  TRAVEL TIME COMPUTED USING ESTIMATED FLOW(CFS) =     133.35
  TRAVEL TIME THRU SUBAREA BASED ON VELOCITY(FEET/SEC.) =   9.07
  AVERAGE FLOW DEPTH(FEET) =   2.06   TRAVEL TIME(MIN.) =   0.35
  Tc(MIN.) =   15.28
  SUBAREA AREA(ACRES) =     0.52       SUBAREA RUNOFF(CFS) =    0.75
  AREA-AVERAGE RUNOFF COEFFICIENT =  0.380
  TOTAL AREA(ACRES) =       82.4         PEAK FLOW RATE(CFS) =     132.98

  END OF SUBAREA CHANNEL FLOW HYDRAULICS:
  DEPTH(FEET) =  2.06   FLOW VELOCITY(FEET/SEC.) =   9.09
  LONGEST FLOWPATH FROM NODE    526.00 TO NODE    535.00 =    2539.02 FEET.

****************************************************************************
  FLOW PROCESS FROM NODE    535.00 TO NODE    535.00 IS CODE =   1
----------------------------------------------------------------------------
  >>>>>DESIGNATE INDEPENDENT STREAM FOR CONFLUENCE<<<<<
============================================================================
  TOTAL NUMBER OF STREAMS =  2
  CONFLUENCE VALUES USED FOR INDEPENDENT STREAM  1 ARE:
  TIME OF CONCENTRATION(MIN.) =   15.28
  RAINFALL INTENSITY(INCH/HR) =   4.10
  TOTAL STREAM AREA(ACRES) =    82.36
  PEAK FLOW RATE(CFS) AT CONFLUENCE =    132.98
```

```
****************************************************************************
  FLOW PROCESS FROM NODE    546.00 TO NODE    547.00 IS CODE =  21
----------------------------------------------------------------------------
  >>>>>RATIONAL METHOD INITIAL SUBAREA ANALYSIS<<<<<
============================================================================
  *USER SPECIFIED(SUBAREA):
  USER-SPECIFIED RUNOFF COEFFICIENT = .4100
  S.C.S. CURVE NUMBER (AMC II) =   0
  INITIAL SUBAREA FLOW-LENGTH(FEET) =   110.01
  UPSTREAM ELEVATION(FEET) =    740.00
  DOWNSTREAM ELEVATION(FEET) =    732.00
  ELEVATION DIFFERENCE(FEET) =      8.00
  SUBAREA OVERLAND TIME OF FLOW(MIN.) =    6.411
  WARNING: INITIAL SUBAREA FLOW PATH LENGTH IS GREATER THAN
           THE MAXIMUM OVERLAND FLOW LENGTH =   100.00
           (Reference: Table 3-1B of Hydrology Manual)
           THE MAXIMUM OVERLAND FLOW LENGTH IS USED IN Tc CALCULATION!
   100 YEAR RAINFALL INTENSITY(INCH/HOUR) =  7.182
  SUBAREA RUNOFF(CFS) =      0.29
  TOTAL AREA(ACRES) =      0.10   TOTAL RUNOFF(CFS) =      0.29

****************************************************************************
  FLOW PROCESS FROM NODE    547.00 TO NODE    548.00 IS CODE =  51
----------------------------------------------------------------------------
  >>>>>COMPUTE TRAPEZOIDAL CHANNEL FLOW<<<<<
  >>>>>TRAVELTIME THRU SUBAREA (EXISTING ELEMENT)<<<<<
============================================================================
  ELEVATION DATA: UPSTREAM(FEET) =    732.00  DOWNSTREAM(FEET) =    663.00
  CHANNEL LENGTH THRU SUBAREA(FEET) =   538.85   CHANNEL SLOPE =  0.1281
  CHANNEL BASE(FEET) =    3.00   "Z" FACTOR =   2.000
  MANNING'S FACTOR = 0.030   MAXIMUM DEPTH(FEET) =  10.00
   100 YEAR RAINFALL INTENSITY(INCH/HOUR) =  6.051
  *USER SPECIFIED(SUBAREA):
  USER-SPECIFIED RUNOFF COEFFICIENT = .3500
  S.C.S. CURVE NUMBER (AMC II) =   0
  TRAVEL TIME COMPUTED USING ESTIMATED FLOW(CFS) =       2.15
  TRAVEL TIME THRU SUBAREA BASED ON VELOCITY(FEET/SEC.) =   4.60
  AVERAGE FLOW DEPTH(FEET) =   0.14   TRAVEL TIME(MIN.) =   1.95
  Tc(MIN.) =    8.36
  SUBAREA AREA(ACRES) =     1.73       SUBAREA RUNOFF(CFS) =    3.66
  AREA-AVERAGE RUNOFF COEFFICIENT =  0.353
  TOTAL AREA(ACRES) =        1.8         PEAK FLOW RATE(CFS) =       3.91

  END OF SUBAREA CHANNEL FLOW HYDRAULICS:
  DEPTH(FEET) =  0.20   FLOW VELOCITY(FEET/SEC.) =   5.65
  LONGEST FLOWPATH FROM NODE    546.00 TO NODE    548.00 =     648.86 FEET.

****************************************************************************
  FLOW PROCESS FROM NODE    548.00 TO NODE    535.00 IS CODE =  51
----------------------------------------------------------------------------
  >>>>>COMPUTE TRAPEZOIDAL CHANNEL FLOW<<<<<
  >>>>>TRAVELTIME THRU SUBAREA (EXISTING ELEMENT)<<<<<
============================================================================
  ELEVATION DATA: UPSTREAM(FEET) =    663.00  DOWNSTREAM(FEET) =    628.00
  CHANNEL LENGTH THRU SUBAREA(FEET) =   671.49   CHANNEL SLOPE =  0.0521
  CHANNEL BASE(FEET) =    3.00   "Z" FACTOR =   2.000
  MANNING'S FACTOR = 0.030   MAXIMUM DEPTH(FEET) =  10.00
   100 YEAR RAINFALL INTENSITY(INCH/HOUR) =  5.245
  *USER SPECIFIED(SUBAREA):
  USER-SPECIFIED RUNOFF COEFFICIENT = .3500
  S.C.S. CURVE NUMBER (AMC II) =   0
  TRAVEL TIME COMPUTED USING ESTIMATED FLOW(CFS) =       8.62
  TRAVEL TIME THRU SUBAREA BASED ON VELOCITY(FEET/SEC.) =   5.39
```

```
  AVERAGE FLOW DEPTH(FEET) =   0.42   TRAVEL TIME(MIN.) =   2.08
  Tc(MIN.) =   10.44
  SUBAREA AREA(ACRES) =     5.11       SUBAREA RUNOFF(CFS) =    9.38
  AREA-AVERAGE RUNOFF COEFFICIENT =  0.351
  TOTAL AREA(ACRES) =        6.9         PEAK FLOW RATE(CFS) =      12.77

  END OF SUBAREA CHANNEL FLOW HYDRAULICS:
  DEPTH(FEET) =  0.52   FLOW VELOCITY(FEET/SEC.) =   6.05
  LONGEST FLOWPATH FROM NODE    546.00 TO NODE    535.00 =    1320.35 FEET.

****************************************************************************
  FLOW PROCESS FROM NODE    535.00 TO NODE    535.00 IS CODE =   1
----------------------------------------------------------------------------
  >>>>>DESIGNATE INDEPENDENT STREAM FOR CONFLUENCE<<<<<
  >>>>>AND COMPUTE VARIOUS CONFLUENCED STREAM VALUES<<<<<
============================================================================
  TOTAL NUMBER OF STREAMS =  2
  CONFLUENCE VALUES USED FOR INDEPENDENT STREAM  2 ARE:
  TIME OF CONCENTRATION(MIN.) =   10.44
  RAINFALL INTENSITY(INCH/HR) =   5.24
  TOTAL STREAM AREA(ACRES) =     6.94
  PEAK FLOW RATE(CFS) AT CONFLUENCE =     12.77

  ** CONFLUENCE DATA **
  STREAM     RUNOFF       Tc      INTENSITY      AREA
  NUMBER      (CFS)     (MIN.)   (INCH/HOUR)    (ACRE)
      1      132.98    15.28        4.101         82.36
      2       12.77    10.44        5.245          6.94

  RAINFALL INTENSITY AND TIME OF CONCENTRATION RATIO
  CONFLUENCE FORMULA USED FOR  2 STREAMS.

  ** PEAK FLOW RATE TABLE **
  STREAM     RUNOFF      Tc      INTENSITY
  NUMBER      (CFS)    (MIN.)   (INCH/HOUR)
      1      116.75    10.44       5.245
      2      142.96    15.28       4.101

  COMPUTED CONFLUENCE ESTIMATES ARE AS FOLLOWS:
  PEAK FLOW RATE(CFS) =     142.96   Tc(MIN.) =   15.28
  TOTAL AREA(ACRES) =       89.3
  LONGEST FLOWPATH FROM NODE    526.00 TO NODE    535.00 =    2539.02 FEET.

****************************************************************************
  FLOW PROCESS FROM NODE    535.00 TO NODE    535.00 IS CODE =  11
----------------------------------------------------------------------------
  >>>>>CONFLUENCE MEMORY BANK # 1 WITH THE MAIN-STREAM MEMORY<<<<<
============================================================================

  ** MAIN STREAM CONFLUENCE DATA **
  STREAM     RUNOFF      Tc      INTENSITY     AREA
  NUMBER      (CFS)    (MIN.)   (INCH/HOUR)   (ACRE)
      1      142.96    15.28       4.101       89.30
  LONGEST FLOWPATH FROM NODE    526.00 TO NODE    535.00 =    2539.02 FEET.

  ** MEMORY BANK #  1 CONFLUENCE DATA **
  STREAM     RUNOFF      Tc      INTENSITY     AREA
  NUMBER      (CFS)    (MIN.)   (INCH/HOUR)   (ACRE)
      1       76.11    12.37       4.700       40.09
  LONGEST FLOWPATH FROM NODE    510.00 TO NODE    535.00 =    2979.88 FEET.

  ** PEAK FLOW RATE TABLE **
  STREAM    RUNOFF       Tc      INTENSITY
```

```
  NUMBER     (CFS)     (MIN.)   (INCH/HOUR)
      1     191.82      12.37        4.700
      2     209.37      15.28        4.101

  COMPUTED CONFLUENCE ESTIMATES ARE AS FOLLOWS:
  PEAK FLOW RATE(CFS) =     209.37   Tc(MIN.) =   15.28
  TOTAL AREA(ACRES) =      129.4

****************************************************************************
  FLOW PROCESS FROM NODE    535.00 TO NODE    535.00 IS CODE =  12
----------------------------------------------------------------------------
  >>>>>CLEAR MEMORY BANK # 1 <<<<<
============================================================================

****************************************************************************
  FLOW PROCESS FROM NODE    535.00 TO NODE    549.00 IS CODE =  51
----------------------------------------------------------------------------
  >>>>>COMPUTE TRAPEZOIDAL CHANNEL FLOW<<<<<
  >>>>>TRAVELTIME THRU SUBAREA (EXISTING ELEMENT)<<<<<
============================================================================
  ELEVATION DATA: UPSTREAM(FEET) =    628.00  DOWNSTREAM(FEET) =    625.00
  CHANNEL LENGTH THRU SUBAREA(FEET) =   370.00   CHANNEL SLOPE =  0.0081
  CHANNEL BASE(FEET) =    3.00   "Z" FACTOR =   2.000
  MANNING'S FACTOR = 0.030   MAXIMUM DEPTH(FEET) =  10.00
   100 YEAR RAINFALL INTENSITY(INCH/HOUR) =  3.947
  *USER SPECIFIED(SUBAREA):
  USER-SPECIFIED RUNOFF COEFFICIENT = .3500
  S.C.S. CURVE NUMBER (AMC II) =   0
  TRAVEL TIME COMPUTED USING ESTIMATED FLOW(CFS) =     212.56
  TRAVEL TIME THRU SUBAREA BASED ON VELOCITY(FEET/SEC.) =   6.60
  AVERAGE FLOW DEPTH(FEET) =   3.33   TRAVEL TIME(MIN.) =   0.93
  Tc(MIN.) =   16.22
  SUBAREA AREA(ACRES) =     4.62       SUBAREA RUNOFF(CFS) =    6.38
  AREA-AVERAGE RUNOFF COEFFICIENT =  0.384
  TOTAL AREA(ACRES) =      134.0         PEAK FLOW RATE(CFS) =     209.37

  END OF SUBAREA CHANNEL FLOW HYDRAULICS:
  DEPTH(FEET) =  3.31   FLOW VELOCITY(FEET/SEC.) =   6.58
  LONGEST FLOWPATH FROM NODE    510.00 TO NODE    549.00 =    3349.88 FEET.

****************************************************************************
  FLOW PROCESS FROM NODE    549.00 TO NODE    549.00 IS CODE =  10
----------------------------------------------------------------------------
  >>>>>MAIN-STREAM MEMORY COPIED ONTO MEMORY BANK # 2 <<<<<
============================================================================

****************************************************************************
  FLOW PROCESS FROM NODE    550.00 TO NODE    551.00 IS CODE =  21
----------------------------------------------------------------------------
  >>>>>RATIONAL METHOD INITIAL SUBAREA ANALYSIS<<<<<
============================================================================
  *USER SPECIFIED(SUBAREA):
  USER-SPECIFIED RUNOFF COEFFICIENT = .4100
  S.C.S. CURVE NUMBER (AMC II) =   0
  INITIAL SUBAREA FLOW-LENGTH(FEET) =    81.58
  UPSTREAM ELEVATION(FEET) =    740.00
  DOWNSTREAM ELEVATION(FEET) =    735.00
  ELEVATION DIFFERENCE(FEET) =      5.00
  SUBAREA OVERLAND TIME OF FLOW(MIN.) =    6.130
   100 YEAR RAINFALL INTENSITY(INCH/HOUR) =  7.393
  SUBAREA RUNOFF(CFS) =      0.30
  TOTAL AREA(ACRES) =      0.10   TOTAL RUNOFF(CFS) =      0.30
```

```
****************************************************************************
  FLOW PROCESS FROM NODE    551.00 TO NODE    552.00 IS CODE =  51
----------------------------------------------------------------------------
  >>>>>COMPUTE TRAPEZOIDAL CHANNEL FLOW<<<<<
  >>>>>TRAVELTIME THRU SUBAREA (EXISTING ELEMENT)<<<<<
============================================================================
  ELEVATION DATA: UPSTREAM(FEET) =    735.00  DOWNSTREAM(FEET) =    655.00
  CHANNEL LENGTH THRU SUBAREA(FEET) =   677.07   CHANNEL SLOPE =  0.1182
  CHANNEL BASE(FEET) =    3.00   "Z" FACTOR =   2.000
  MANNING'S FACTOR = 0.030   MAXIMUM DEPTH(FEET) =  10.00
   100 YEAR RAINFALL INTENSITY(INCH/HOUR) =  6.100
  *USER SPECIFIED(SUBAREA):
  USER-SPECIFIED RUNOFF COEFFICIENT = .4100
  S.C.S. CURVE NUMBER (AMC II) =   0
  TRAVEL TIME COMPUTED USING ESTIMATED FLOW(CFS) =       3.63
  TRAVEL TIME THRU SUBAREA BASED ON VELOCITY(FEET/SEC.) =   5.30
  AVERAGE FLOW DEPTH(FEET) =   0.20   TRAVEL TIME(MIN.) =   2.13
  Tc(MIN.) =    8.26
  SUBAREA AREA(ACRES) =     2.64       SUBAREA RUNOFF(CFS) =    6.60
  AREA-AVERAGE RUNOFF COEFFICIENT =  0.410
  TOTAL AREA(ACRES) =        2.7         PEAK FLOW RATE(CFS) =       6.85

  END OF SUBAREA CHANNEL FLOW HYDRAULICS:
  DEPTH(FEET) =  0.29   FLOW VELOCITY(FEET/SEC.) =   6.68
  LONGEST FLOWPATH FROM NODE    550.00 TO NODE    552.00 =     758.65 FEET.

****************************************************************************
  FLOW PROCESS FROM NODE    552.00 TO NODE    552.00 IS CODE =   1
----------------------------------------------------------------------------
  >>>>>DESIGNATE INDEPENDENT STREAM FOR CONFLUENCE<<<<<
============================================================================
  TOTAL NUMBER OF STREAMS =  2
  CONFLUENCE VALUES USED FOR INDEPENDENT STREAM  1 ARE:
  TIME OF CONCENTRATION(MIN.) =    8.26
  RAINFALL INTENSITY(INCH/HR) =   6.10
  TOTAL STREAM AREA(ACRES) =     2.74
  PEAK FLOW RATE(CFS) AT CONFLUENCE =      6.85

****************************************************************************
  FLOW PROCESS FROM NODE    553.00 TO NODE    554.00 IS CODE =  21
----------------------------------------------------------------------------
  >>>>>RATIONAL METHOD INITIAL SUBAREA ANALYSIS<<<<<
============================================================================
  *USER SPECIFIED(SUBAREA):
  USER-SPECIFIED RUNOFF COEFFICIENT = .4100
  S.C.S. CURVE NUMBER (AMC II) =   0
  INITIAL SUBAREA FLOW-LENGTH(FEET) =    77.43
  UPSTREAM ELEVATION(FEET) =    755.00
  DOWNSTREAM ELEVATION(FEET) =    750.00
  ELEVATION DIFFERENCE(FEET) =      5.00
  SUBAREA OVERLAND TIME OF FLOW(MIN.) =    5.869
   100 YEAR RAINFALL INTENSITY(INCH/HOUR) =  7.603
  SUBAREA RUNOFF(CFS) =      0.34
  TOTAL AREA(ACRES) =      0.11   TOTAL RUNOFF(CFS) =      0.34

****************************************************************************
  FLOW PROCESS FROM NODE    554.00 TO NODE    552.00 IS CODE =  51
----------------------------------------------------------------------------
  >>>>>COMPUTE TRAPEZOIDAL CHANNEL FLOW<<<<<
  >>>>>TRAVELTIME THRU SUBAREA (EXISTING ELEMENT)<<<<<
============================================================================
  ELEVATION DATA: UPSTREAM(FEET) =    750.00  DOWNSTREAM(FEET) =    655.00
  CHANNEL LENGTH THRU SUBAREA(FEET) =   689.99   CHANNEL SLOPE =  0.1377
```

```
  CHANNEL BASE(FEET) =    3.00   "Z" FACTOR =   2.000
  MANNING'S FACTOR = 0.030   MAXIMUM DEPTH(FEET) =  10.00
   100 YEAR RAINFALL INTENSITY(INCH/HOUR) =  6.291
  *USER SPECIFIED(SUBAREA):
  USER-SPECIFIED RUNOFF COEFFICIENT = .4100
  S.C.S. CURVE NUMBER (AMC II) =   0
  TRAVEL TIME COMPUTED USING ESTIMATED FLOW(CFS) =       3.93
  TRAVEL TIME THRU SUBAREA BASED ON VELOCITY(FEET/SEC.) =   5.74
  AVERAGE FLOW DEPTH(FEET) =   0.20   TRAVEL TIME(MIN.) =   2.00
  Tc(MIN.) =    7.87
  SUBAREA AREA(ACRES) =     2.75       SUBAREA RUNOFF(CFS) =    7.09
  AREA-AVERAGE RUNOFF COEFFICIENT =  0.410
  TOTAL AREA(ACRES) =        2.9         PEAK FLOW RATE(CFS) =       7.38

  END OF SUBAREA CHANNEL FLOW HYDRAULICS:
  DEPTH(FEET) =  0.29   FLOW VELOCITY(FEET/SEC.) =   7.19
  LONGEST FLOWPATH FROM NODE    553.00 TO NODE    552.00 =     767.42 FEET.

****************************************************************************
  FLOW PROCESS FROM NODE    552.00 TO NODE    552.00 IS CODE =   1
----------------------------------------------------------------------------
  >>>>>DESIGNATE INDEPENDENT STREAM FOR CONFLUENCE<<<<<
  >>>>>AND COMPUTE VARIOUS CONFLUENCED STREAM VALUES<<<<<
============================================================================
  TOTAL NUMBER OF STREAMS =  2
  CONFLUENCE VALUES USED FOR INDEPENDENT STREAM  2 ARE:
  TIME OF CONCENTRATION(MIN.) =    7.87
  RAINFALL INTENSITY(INCH/HR) =   6.29
  TOTAL STREAM AREA(ACRES) =     2.86
  PEAK FLOW RATE(CFS) AT CONFLUENCE =      7.38

  ** CONFLUENCE DATA **
  STREAM     RUNOFF       Tc      INTENSITY      AREA
  NUMBER      (CFS)     (MIN.)   (INCH/HOUR)    (ACRE)
      1        6.85     8.26        6.100          2.74
      2        7.38     7.87        6.291          2.86

  RAINFALL INTENSITY AND TIME OF CONCENTRATION RATIO
  CONFLUENCE FORMULA USED FOR  2 STREAMS.

  ** PEAK FLOW RATE TABLE **
  STREAM     RUNOFF      Tc      INTENSITY
  NUMBER      (CFS)    (MIN.)   (INCH/HOUR)
      1       13.91     7.87       6.291
      2       14.01     8.26       6.100

  COMPUTED CONFLUENCE ESTIMATES ARE AS FOLLOWS:
  PEAK FLOW RATE(CFS) =      14.01   Tc(MIN.) =    8.26
  TOTAL AREA(ACRES) =        5.6
  LONGEST FLOWPATH FROM NODE    553.00 TO NODE    552.00 =     767.42 FEET.

****************************************************************************
  FLOW PROCESS FROM NODE    552.00 TO NODE    549.00 IS CODE =  51
----------------------------------------------------------------------------
  >>>>>COMPUTE TRAPEZOIDAL CHANNEL FLOW<<<<<
  >>>>>TRAVELTIME THRU SUBAREA (EXISTING ELEMENT)<<<<<
============================================================================
  ELEVATION DATA: UPSTREAM(FEET) =    655.00  DOWNSTREAM(FEET) =    625.00
  CHANNEL LENGTH THRU SUBAREA(FEET) =   593.80   CHANNEL SLOPE =  0.0505
  CHANNEL BASE(FEET) =    3.00   "Z" FACTOR =   2.000
  MANNING'S FACTOR = 0.030   MAXIMUM DEPTH(FEET) =  10.00
   100 YEAR RAINFALL INTENSITY(INCH/HOUR) =  5.488
  *USER SPECIFIED(SUBAREA):
```

```
  USER-SPECIFIED RUNOFF COEFFICIENT = .3500
  S.C.S. CURVE NUMBER (AMC II) =   0
  TRAVEL TIME COMPUTED USING ESTIMATED FLOW(CFS) =      18.84
  TRAVEL TIME THRU SUBAREA BASED ON VELOCITY(FEET/SEC.) =   6.72
  AVERAGE FLOW DEPTH(FEET) =   0.65   TRAVEL TIME(MIN.) =   1.47
  Tc(MIN.) =    9.73
  SUBAREA AREA(ACRES) =     5.02       SUBAREA RUNOFF(CFS) =    9.64
  AREA-AVERAGE RUNOFF COEFFICIENT =  0.382
  TOTAL AREA(ACRES) =       10.6         PEAK FLOW RATE(CFS) =      22.24

  END OF SUBAREA CHANNEL FLOW HYDRAULICS:
  DEPTH(FEET) =  0.71   FLOW VELOCITY(FEET/SEC.) =   7.06
  LONGEST FLOWPATH FROM NODE    553.00 TO NODE    549.00 =    1361.22 FEET.

****************************************************************************
  FLOW PROCESS FROM NODE    549.00 TO NODE    549.00 IS CODE =  11
----------------------------------------------------------------------------
  >>>>>CONFLUENCE MEMORY BANK # 2 WITH THE MAIN-STREAM MEMORY<<<<<
============================================================================

  ** MAIN STREAM CONFLUENCE DATA **
  STREAM     RUNOFF      Tc      INTENSITY     AREA
  NUMBER      (CFS)    (MIN.)   (INCH/HOUR)   (ACRE)
      1       22.24     9.73       5.488       10.62
  LONGEST FLOWPATH FROM NODE    553.00 TO NODE    549.00 =    1361.22 FEET.

  ** MEMORY BANK #  2 CONFLUENCE DATA **
  STREAM     RUNOFF      Tc      INTENSITY     AREA
  NUMBER      (CFS)    (MIN.)   (INCH/HOUR)   (ACRE)
      1      209.37    16.22       3.947      134.01
  LONGEST FLOWPATH FROM NODE    510.00 TO NODE    549.00 =    3349.88 FEET.

  ** PEAK FLOW RATE TABLE **
  STREAM    RUNOFF       Tc      INTENSITY
  NUMBER     (CFS)     (MIN.)   (INCH/HOUR)
      1     147.85       9.73        5.488
      2     225.36      16.22        3.947

  COMPUTED CONFLUENCE ESTIMATES ARE AS FOLLOWS:
  PEAK FLOW RATE(CFS) =     225.36   Tc(MIN.) =   16.22
  TOTAL AREA(ACRES) =      144.6

****************************************************************************
  FLOW PROCESS FROM NODE    549.00 TO NODE    549.00 IS CODE =  12
----------------------------------------------------------------------------
  >>>>>CLEAR MEMORY BANK # 2 <<<<<
============================================================================

****************************************************************************
  FLOW PROCESS FROM NODE    549.00 TO NODE    555.00 IS CODE =  51
----------------------------------------------------------------------------
  >>>>>COMPUTE TRAPEZOIDAL CHANNEL FLOW<<<<<
  >>>>>TRAVELTIME THRU SUBAREA (EXISTING ELEMENT)<<<<<
============================================================================
  ELEVATION DATA: UPSTREAM(FEET) =    625.00  DOWNSTREAM(FEET) =    619.00
  CHANNEL LENGTH THRU SUBAREA(FEET) =   602.24   CHANNEL SLOPE =  0.0100
  CHANNEL BASE(FEET) =    3.00   "Z" FACTOR =   2.000
  MANNING'S FACTOR = 0.030   MAXIMUM DEPTH(FEET) =  10.00
   100 YEAR RAINFALL INTENSITY(INCH/HOUR) =  3.744
  *USER SPECIFIED(SUBAREA):
  USER-SPECIFIED RUNOFF COEFFICIENT = .3500
  S.C.S. CURVE NUMBER (AMC II) =   0
  TRAVEL TIME COMPUTED USING ESTIMATED FLOW(CFS) =     230.54
```

```
  TRAVEL TIME THRU SUBAREA BASED ON VELOCITY(FEET/SEC.) =   7.27
  AVERAGE FLOW DEPTH(FEET) =   3.30   TRAVEL TIME(MIN.) =   1.38
  Tc(MIN.) =   17.60
  SUBAREA AREA(ACRES) =     7.90       SUBAREA RUNOFF(CFS) =   10.35
  AREA-AVERAGE RUNOFF COEFFICIENT =  0.382
  TOTAL AREA(ACRES) =      152.5         PEAK FLOW RATE(CFS) =     225.36

  END OF SUBAREA CHANNEL FLOW HYDRAULICS:
  DEPTH(FEET) =  3.27   FLOW VELOCITY(FEET/SEC.) =   7.23
  LONGEST FLOWPATH FROM NODE    510.00 TO NODE    555.00 =    3952.12 FEET.

****************************************************************************
  FLOW PROCESS FROM NODE    555.00 TO NODE    555.00 IS CODE =   1
----------------------------------------------------------------------------
  >>>>>DESIGNATE INDEPENDENT STREAM FOR CONFLUENCE<<<<<
============================================================================
  TOTAL NUMBER OF STREAMS =  3
  CONFLUENCE VALUES USED FOR INDEPENDENT STREAM  1 ARE:
  TIME OF CONCENTRATION(MIN.) =   17.60
  RAINFALL INTENSITY(INCH/HR) =   3.74
  TOTAL STREAM AREA(ACRES) =   152.53
  PEAK FLOW RATE(CFS) AT CONFLUENCE =    225.36

****************************************************************************
  FLOW PROCESS FROM NODE    556.00 TO NODE    557.00 IS CODE =  21
----------------------------------------------------------------------------
  >>>>>RATIONAL METHOD INITIAL SUBAREA ANALYSIS<<<<<
============================================================================
  *USER SPECIFIED(SUBAREA):
  USER-SPECIFIED RUNOFF COEFFICIENT = .4100
  S.C.S. CURVE NUMBER (AMC II) =   0
  INITIAL SUBAREA FLOW-LENGTH(FEET) =    81.58
  UPSTREAM ELEVATION(FEET) =    750.00
  DOWNSTREAM ELEVATION(FEET) =    740.00
  ELEVATION DIFFERENCE(FEET) =     10.00
  SUBAREA OVERLAND TIME OF FLOW(MIN.) =    5.207
  WARNING: THE MAXIMUM OVERLAND FLOW SLOPE, 10.%, IS USED IN Tc CALCULATION!
   100 YEAR RAINFALL INTENSITY(INCH/HOUR) =  8.213
  SUBAREA RUNOFF(CFS) =      0.37
  TOTAL AREA(ACRES) =      0.11   TOTAL RUNOFF(CFS) =      0.37

****************************************************************************
  FLOW PROCESS FROM NODE    557.00 TO NODE    558.00 IS CODE =  51
----------------------------------------------------------------------------
  >>>>>COMPUTE TRAPEZOIDAL CHANNEL FLOW<<<<<
  >>>>>TRAVELTIME THRU SUBAREA (EXISTING ELEMENT)<<<<<
============================================================================
  ELEVATION DATA: UPSTREAM(FEET) =    740.00  DOWNSTREAM(FEET) =    685.00
  CHANNEL LENGTH THRU SUBAREA(FEET) =   459.62   CHANNEL SLOPE =  0.1197
  CHANNEL BASE(FEET) =    3.00   "Z" FACTOR =   2.000
  MANNING'S FACTOR = 0.030   MAXIMUM DEPTH(FEET) =  10.00
   100 YEAR RAINFALL INTENSITY(INCH/HOUR) =  7.283
  *USER SPECIFIED(SUBAREA):
  USER-SPECIFIED RUNOFF COEFFICIENT = .4100
  S.C.S. CURVE NUMBER (AMC II) =   0
  TRAVEL TIME COMPUTED USING ESTIMATED FLOW(CFS) =       8.77
  TRAVEL TIME THRU SUBAREA BASED ON VELOCITY(FEET/SEC.) =   7.19
  AVERAGE FLOW DEPTH(FEET) =   0.33   TRAVEL TIME(MIN.) =   1.07
  Tc(MIN.) =    6.27
  SUBAREA AREA(ACRES) =     5.60       SUBAREA RUNOFF(CFS) =   16.72
  AREA-AVERAGE RUNOFF COEFFICIENT =  0.410
  TOTAL AREA(ACRES) =        5.7         PEAK FLOW RATE(CFS) =      17.05
```

```
  END OF SUBAREA CHANNEL FLOW HYDRAULICS:
  DEPTH(FEET) =  0.49   FLOW VELOCITY(FEET/SEC.) =   8.85
  LONGEST FLOWPATH FROM NODE    556.00 TO NODE    558.00 =     541.20 FEET.

****************************************************************************
  FLOW PROCESS FROM NODE    558.00 TO NODE    555.00 IS CODE =  51
----------------------------------------------------------------------------
  >>>>>COMPUTE TRAPEZOIDAL CHANNEL FLOW<<<<<
  >>>>>TRAVELTIME THRU SUBAREA (EXISTING ELEMENT)<<<<<
============================================================================
  ELEVATION DATA: UPSTREAM(FEET) =    685.00  DOWNSTREAM(FEET) =    619.00
  CHANNEL LENGTH THRU SUBAREA(FEET) =   871.15   CHANNEL SLOPE =  0.0758
  CHANNEL BASE(FEET) =    3.00   "Z" FACTOR =   2.000
  MANNING'S FACTOR = 0.030   MAXIMUM DEPTH(FEET) =  10.00
   100 YEAR RAINFALL INTENSITY(INCH/HOUR) =  6.212
  *USER SPECIFIED(SUBAREA):
  USER-SPECIFIED RUNOFF COEFFICIENT = .4100
  S.C.S. CURVE NUMBER (AMC II) =   0
  TRAVEL TIME COMPUTED USING ESTIMATED FLOW(CFS) =      23.19
  TRAVEL TIME THRU SUBAREA BASED ON VELOCITY(FEET/SEC.) =   8.27
  AVERAGE FLOW DEPTH(FEET) =   0.65   TRAVEL TIME(MIN.) =   1.75
  Tc(MIN.) =    8.03
  SUBAREA AREA(ACRES) =     4.81       SUBAREA RUNOFF(CFS) =   12.25
  AREA-AVERAGE RUNOFF COEFFICIENT =  0.410
  TOTAL AREA(ACRES) =       10.5         PEAK FLOW RATE(CFS) =      26.79

  END OF SUBAREA CHANNEL FLOW HYDRAULICS:
  DEPTH(FEET) =  0.70   FLOW VELOCITY(FEET/SEC.) =   8.62
  LONGEST FLOWPATH FROM NODE    556.00 TO NODE    555.00 =    1412.35 FEET.

****************************************************************************
  FLOW PROCESS FROM NODE    555.00 TO NODE    555.00 IS CODE =   1
----------------------------------------------------------------------------
  >>>>>DESIGNATE INDEPENDENT STREAM FOR CONFLUENCE<<<<<
============================================================================
  TOTAL NUMBER OF STREAMS =  3
  CONFLUENCE VALUES USED FOR INDEPENDENT STREAM  2 ARE:
  TIME OF CONCENTRATION(MIN.) =    8.03
  RAINFALL INTENSITY(INCH/HR) =   6.21
  TOTAL STREAM AREA(ACRES) =    10.52
  PEAK FLOW RATE(CFS) AT CONFLUENCE =     26.79

****************************************************************************
  FLOW PROCESS FROM NODE    559.00 TO NODE    560.00 IS CODE =  21
----------------------------------------------------------------------------
  >>>>>RATIONAL METHOD INITIAL SUBAREA ANALYSIS<<<<<
============================================================================
  *USER SPECIFIED(SUBAREA):
  USER-SPECIFIED RUNOFF COEFFICIENT = .4100
  S.C.S. CURVE NUMBER (AMC II) =   0
  INITIAL SUBAREA FLOW-LENGTH(FEET) =    87.52
  UPSTREAM ELEVATION(FEET) =    860.00
  DOWNSTREAM ELEVATION(FEET) =    855.00
  ELEVATION DIFFERENCE(FEET) =      5.00
  SUBAREA OVERLAND TIME OF FLOW(MIN.) =    6.500
   100 YEAR RAINFALL INTENSITY(INCH/HOUR) =  7.119
  SUBAREA RUNOFF(CFS) =      0.23
  TOTAL AREA(ACRES) =      0.08   TOTAL RUNOFF(CFS) =      0.23

****************************************************************************
  FLOW PROCESS FROM NODE    560.00 TO NODE    561.00 IS CODE =  51
----------------------------------------------------------------------------
  >>>>>COMPUTE TRAPEZOIDAL CHANNEL FLOW<<<<<
```

```
  >>>>>TRAVELTIME THRU SUBAREA (EXISTING ELEMENT)<<<<<
================================================================================
  ELEVATION DATA: UPSTREAM(FEET) =    855.00  DOWNSTREAM(FEET) =    840.00
  CHANNEL LENGTH THRU SUBAREA(FEET) =   220.61   CHANNEL SLOPE =  0.0680
  CHANNEL BASE(FEET) =    3.00   "Z" FACTOR =   2.000
  MANNING'S FACTOR = 0.030   MAXIMUM DEPTH(FEET) =  10.00
   100 YEAR RAINFALL INTENSITY(INCH/HOUR) =  6.427
  *USER SPECIFIED(SUBAREA):
  USER-SPECIFIED RUNOFF COEFFICIENT = .4100
  S.C.S. CURVE NUMBER (AMC II) =   0
  TRAVEL TIME COMPUTED USING ESTIMATED FLOW(CFS) =       1.51
  TRAVEL TIME THRU SUBAREA BASED ON VELOCITY(FEET/SEC.) =   3.29
  AVERAGE FLOW DEPTH(FEET) =   0.14   TRAVEL TIME(MIN.) =   1.12
  Tc(MIN.) =    7.62
  SUBAREA AREA(ACRES) =     0.97       SUBAREA RUNOFF(CFS) =    2.56
  AREA-AVERAGE RUNOFF COEFFICIENT =  0.410
  TOTAL AREA(ACRES) =        1.1         PEAK FLOW RATE(CFS) =       2.77

  END OF SUBAREA CHANNEL FLOW HYDRAULICS:
  DEPTH(FEET) =  0.20   FLOW VELOCITY(FEET/SEC.) =   4.04
  LONGEST FLOWPATH FROM NODE    559.00 TO NODE    561.00 =     308.13 FEET.

****************************************************************************
  FLOW PROCESS FROM NODE    561.00 TO NODE    562.00 IS CODE =  51
----------------------------------------------------------------------------
  >>>>>COMPUTE TRAPEZOIDAL CHANNEL FLOW<<<<<
  >>>>>TRAVELTIME THRU SUBAREA (EXISTING ELEMENT)<<<<<
================================================================================
  ELEVATION DATA: UPSTREAM(FEET) =    840.00  DOWNSTREAM(FEET) =    775.00
  CHANNEL LENGTH THRU SUBAREA(FEET) =   371.19   CHANNEL SLOPE =  0.1751
  CHANNEL BASE(FEET) =    3.00   "Z" FACTOR =   2.000
  MANNING'S FACTOR = 0.030   MAXIMUM DEPTH(FEET) =  10.00
   100 YEAR RAINFALL INTENSITY(INCH/HOUR) =  6.032
  *USER SPECIFIED(SUBAREA):
  USER-SPECIFIED RUNOFF COEFFICIENT = .4100
  S.C.S. CURVE NUMBER (AMC II) =   0
  TRAVEL TIME COMPUTED USING ESTIMATED FLOW(CFS) =       7.77
  TRAVEL TIME THRU SUBAREA BASED ON VELOCITY(FEET/SEC.) =   7.87
  AVERAGE FLOW DEPTH(FEET) =   0.28   TRAVEL TIME(MIN.) =   0.79
  Tc(MIN.) =    8.40
  SUBAREA AREA(ACRES) =     4.04       SUBAREA RUNOFF(CFS) =    9.99
  AREA-AVERAGE RUNOFF COEFFICIENT =  0.410
  TOTAL AREA(ACRES) =        5.1         PEAK FLOW RATE(CFS) =      12.59

  END OF SUBAREA CHANNEL FLOW HYDRAULICS:
  DEPTH(FEET) =  0.37   FLOW VELOCITY(FEET/SEC.) =   9.12
  LONGEST FLOWPATH FROM NODE    559.00 TO NODE    562.00 =     679.32 FEET.

****************************************************************************
  FLOW PROCESS FROM NODE    562.00 TO NODE    563.00 IS CODE =  51
----------------------------------------------------------------------------
  >>>>>COMPUTE TRAPEZOIDAL CHANNEL FLOW<<<<<
  >>>>>TRAVELTIME THRU SUBAREA (EXISTING ELEMENT)<<<<<
================================================================================
  ELEVATION DATA: UPSTREAM(FEET) =    775.00  DOWNSTREAM(FEET) =    725.00
  CHANNEL LENGTH THRU SUBAREA(FEET) =   474.11   CHANNEL SLOPE =  0.1055
  CHANNEL BASE(FEET) =    3.00   "Z" FACTOR =   2.000
  MANNING'S FACTOR = 0.030   MAXIMUM DEPTH(FEET) =  10.00
   100 YEAR RAINFALL INTENSITY(INCH/HOUR) =  5.654
  *USER SPECIFIED(SUBAREA):
  USER-SPECIFIED RUNOFF COEFFICIENT = .4100
  S.C.S. CURVE NUMBER (AMC II) =   0
  TRAVEL TIME COMPUTED USING ESTIMATED FLOW(CFS) =      20.20
```

```
  TRAVEL TIME THRU SUBAREA BASED ON VELOCITY(FEET/SEC.) =   8.91
  AVERAGE FLOW DEPTH(FEET) =   0.55   TRAVEL TIME(MIN.) =   0.89
  Tc(MIN.) =    9.29
  SUBAREA AREA(ACRES) =     6.56       SUBAREA RUNOFF(CFS) =   15.21
  AREA-AVERAGE RUNOFF COEFFICIENT =  0.410
  TOTAL AREA(ACRES) =       11.6         PEAK FLOW RATE(CFS) =      27.01

  END OF SUBAREA CHANNEL FLOW HYDRAULICS:
  DEPTH(FEET) =  0.65   FLOW VELOCITY(FEET/SEC.) =   9.75
  LONGEST FLOWPATH FROM NODE    559.00 TO NODE    563.00 =    1153.43 FEET.

****************************************************************************
  FLOW PROCESS FROM NODE    563.00 TO NODE    564.00 IS CODE =  51
----------------------------------------------------------------------------
  >>>>>COMPUTE TRAPEZOIDAL CHANNEL FLOW<<<<<
  >>>>>TRAVELTIME THRU SUBAREA (EXISTING ELEMENT)<<<<<
============================================================================
  ELEVATION DATA: UPSTREAM(FEET) =    725.00  DOWNSTREAM(FEET) =    715.00
  CHANNEL LENGTH THRU SUBAREA(FEET) =   292.84   CHANNEL SLOPE =  0.0341
  CHANNEL BASE(FEET) =    3.00   "Z" FACTOR =   2.000
  MANNING'S FACTOR = 0.030   MAXIMUM DEPTH(FEET) =  10.00
   100 YEAR RAINFALL INTENSITY(INCH/HOUR) =  5.398
  *USER SPECIFIED(SUBAREA):
  USER-SPECIFIED RUNOFF COEFFICIENT = .4100
  S.C.S. CURVE NUMBER (AMC II) =   0
  TRAVEL TIME COMPUTED USING ESTIMATED FLOW(CFS) =      35.81
  TRAVEL TIME THRU SUBAREA BASED ON VELOCITY(FEET/SEC.) =   7.04
  AVERAGE FLOW DEPTH(FEET) =   1.01   TRAVEL TIME(MIN.) =   0.69
  Tc(MIN.) =    9.98
  SUBAREA AREA(ACRES) =     7.95       SUBAREA RUNOFF(CFS) =   17.59
  AREA-AVERAGE RUNOFF COEFFICIENT =  0.410
  TOTAL AREA(ACRES) =       19.6         PEAK FLOW RATE(CFS) =      43.38

  END OF SUBAREA CHANNEL FLOW HYDRAULICS:
  DEPTH(FEET) =  1.12   FLOW VELOCITY(FEET/SEC.) =   7.42
  LONGEST FLOWPATH FROM NODE    559.00 TO NODE    564.00 =    1446.27 FEET.

****************************************************************************
  FLOW PROCESS FROM NODE    564.00 TO NODE    555.00 IS CODE =  51
----------------------------------------------------------------------------
  >>>>>COMPUTE TRAPEZOIDAL CHANNEL FLOW<<<<<
  >>>>>TRAVELTIME THRU SUBAREA (EXISTING ELEMENT)<<<<<
============================================================================
  ELEVATION DATA: UPSTREAM(FEET) =    715.00  DOWNSTREAM(FEET) =    619.00
  CHANNEL LENGTH THRU SUBAREA(FEET) =   584.57   CHANNEL SLOPE =  0.1642
  CHANNEL BASE(FEET) =    3.00   "Z" FACTOR =   2.000
  MANNING'S FACTOR = 0.030   MAXIMUM DEPTH(FEET) =  10.00
   100 YEAR RAINFALL INTENSITY(INCH/HOUR) =  5.163
  *USER SPECIFIED(SUBAREA):
  USER-SPECIFIED RUNOFF COEFFICIENT = .4100
  S.C.S. CURVE NUMBER (AMC II) =   0
  TRAVEL TIME COMPUTED USING ESTIMATED FLOW(CFS) =      50.82
  TRAVEL TIME THRU SUBAREA BASED ON VELOCITY(FEET/SEC.) =  13.67
  AVERAGE FLOW DEPTH(FEET) =   0.81   TRAVEL TIME(MIN.) =   0.71
  Tc(MIN.) =   10.69
  SUBAREA AREA(ACRES) =     7.03       SUBAREA RUNOFF(CFS) =   14.88
  AREA-AVERAGE RUNOFF COEFFICIENT =  0.410
  TOTAL AREA(ACRES) =       26.6         PEAK FLOW RATE(CFS) =      56.37

  END OF SUBAREA CHANNEL FLOW HYDRAULICS:
  DEPTH(FEET) =  0.85   FLOW VELOCITY(FEET/SEC.) =  14.07
  LONGEST FLOWPATH FROM NODE    559.00 TO NODE    555.00 =    2030.84 FEET.
```

```
****************************************************************************
  FLOW PROCESS FROM NODE    555.00 TO NODE    555.00 IS CODE =   1
----------------------------------------------------------------------------
  >>>>>DESIGNATE INDEPENDENT STREAM FOR CONFLUENCE<<<<<
  >>>>>AND COMPUTE VARIOUS CONFLUENCED STREAM VALUES<<<<<
============================================================================
  TOTAL NUMBER OF STREAMS =  3
  CONFLUENCE VALUES USED FOR INDEPENDENT STREAM  3 ARE:
  TIME OF CONCENTRATION(MIN.) =   10.69
  RAINFALL INTENSITY(INCH/HR) =   5.16
  TOTAL STREAM AREA(ACRES) =    26.63
  PEAK FLOW RATE(CFS) AT CONFLUENCE =     56.37

  ** CONFLUENCE DATA **
  STREAM     RUNOFF       Tc      INTENSITY      AREA
  NUMBER      (CFS)     (MIN.)   (INCH/HOUR)    (ACRE)
      1      225.36    17.60        3.744        152.53
      2       26.79     8.03        6.212         10.52
      3       56.37    10.69        5.163         26.63

  RAINFALL INTENSITY AND TIME OF CONCENTRATION RATIO
  CONFLUENCE FORMULA USED FOR  3 STREAMS.

  ** PEAK FLOW RATE TABLE **
  STREAM     RUNOFF      Tc      INTENSITY
  NUMBER      (CFS)    (MIN.)   (INCH/HOUR)
      1      171.92     8.03       6.212
      2      215.59    10.69       5.163
      3      282.40    17.60       3.744

  COMPUTED CONFLUENCE ESTIMATES ARE AS FOLLOWS:
  PEAK FLOW RATE(CFS) =     282.40   Tc(MIN.) =   17.60
  TOTAL AREA(ACRES) =      189.7
  LONGEST FLOWPATH FROM NODE    510.00 TO NODE    555.00 =    3952.12 FEET.

****************************************************************************
  FLOW PROCESS FROM NODE    555.00 TO NODE    565.00 IS CODE =  51
----------------------------------------------------------------------------
  >>>>>COMPUTE TRAPEZOIDAL CHANNEL FLOW<<<<<
  >>>>>TRAVELTIME THRU SUBAREA (EXISTING ELEMENT)<<<<<
============================================================================
  ELEVATION DATA: UPSTREAM(FEET) =    619.00  DOWNSTREAM(FEET) =    613.00
  CHANNEL LENGTH THRU SUBAREA(FEET) =   382.53   CHANNEL SLOPE =  0.0157
  CHANNEL BASE(FEET) =    3.00   "Z" FACTOR =   2.000
  MANNING'S FACTOR = 0.030   MAXIMUM DEPTH(FEET) =  10.00
   100 YEAR RAINFALL INTENSITY(INCH/HOUR) =  3.651
  *USER SPECIFIED(SUBAREA):
  USER-SPECIFIED RUNOFF COEFFICIENT = .3500
  S.C.S. CURVE NUMBER (AMC II) =   0
  TRAVEL TIME COMPUTED USING ESTIMATED FLOW(CFS) =     285.83
  TRAVEL TIME THRU SUBAREA BASED ON VELOCITY(FEET/SEC.) =   9.10
  AVERAGE FLOW DEPTH(FEET) =   3.28   TRAVEL TIME(MIN.) =   0.70
  Tc(MIN.) =   18.30
  SUBAREA AREA(ACRES) =     5.37       SUBAREA RUNOFF(CFS) =    6.86
  AREA-AVERAGE RUNOFF COEFFICIENT =  0.387
  TOTAL AREA(ACRES) =      195.0         PEAK FLOW RATE(CFS) =     282.40

  END OF SUBAREA CHANNEL FLOW HYDRAULICS:
  DEPTH(FEET) =  3.27   FLOW VELOCITY(FEET/SEC.) =   9.06
  LONGEST FLOWPATH FROM NODE    510.00 TO NODE    565.00 =    4334.65 FEET.

****************************************************************************
  FLOW PROCESS FROM NODE    565.00 TO NODE    565.00 IS CODE =   1
```

```
----------------------------------------------------------------------------
  >>>>>DESIGNATE INDEPENDENT STREAM FOR CONFLUENCE<<<<<
============================================================================
  TOTAL NUMBER OF STREAMS =  2
  CONFLUENCE VALUES USED FOR INDEPENDENT STREAM  1 ARE:
  TIME OF CONCENTRATION(MIN.) =   18.30
  RAINFALL INTENSITY(INCH/HR) =   3.65
  TOTAL STREAM AREA(ACRES) =   195.05
  PEAK FLOW RATE(CFS) AT CONFLUENCE =    282.40

****************************************************************************
  FLOW PROCESS FROM NODE    566.00 TO NODE    567.00 IS CODE =  21
----------------------------------------------------------------------------
  >>>>>RATIONAL METHOD INITIAL SUBAREA ANALYSIS<<<<<
============================================================================
  *USER SPECIFIED(SUBAREA):
  USER-SPECIFIED RUNOFF COEFFICIENT = .4100
  S.C.S. CURVE NUMBER (AMC II) =   0
  INITIAL SUBAREA FLOW-LENGTH(FEET) =   115.28
  UPSTREAM ELEVATION(FEET) =    732.00
  DOWNSTREAM ELEVATION(FEET) =    725.00
  ELEVATION DIFFERENCE(FEET) =      7.00
  SUBAREA OVERLAND TIME OF FLOW(MIN.) =    6.808
  WARNING: INITIAL SUBAREA FLOW PATH LENGTH IS GREATER THAN
           THE MAXIMUM OVERLAND FLOW LENGTH =   100.00
           (Reference: Table 3-1B of Hydrology Manual)
           THE MAXIMUM OVERLAND FLOW LENGTH IS USED IN Tc CALCULATION!
   100 YEAR RAINFALL INTENSITY(INCH/HOUR) =  6.909
  SUBAREA RUNOFF(CFS) =      0.31
  TOTAL AREA(ACRES) =      0.11   TOTAL RUNOFF(CFS) =      0.31

****************************************************************************
  FLOW PROCESS FROM NODE    567.00 TO NODE    568.00 IS CODE =  51
----------------------------------------------------------------------------
  >>>>>COMPUTE TRAPEZOIDAL CHANNEL FLOW<<<<<
  >>>>>TRAVELTIME THRU SUBAREA (EXISTING ELEMENT)<<<<<
============================================================================
  ELEVATION DATA: UPSTREAM(FEET) =    725.00  DOWNSTREAM(FEET) =    669.00
  CHANNEL LENGTH THRU SUBAREA(FEET) =   416.43   CHANNEL SLOPE =  0.1345
  CHANNEL BASE(FEET) =    3.00   "Z" FACTOR =   2.000
  MANNING'S FACTOR = 0.030   MAXIMUM DEPTH(FEET) =  10.00
   100 YEAR RAINFALL INTENSITY(INCH/HOUR) =  5.941
  *USER SPECIFIED(SUBAREA):
  USER-SPECIFIED RUNOFF COEFFICIENT = .3500
  S.C.S. CURVE NUMBER (AMC II) =   0
  TRAVEL TIME COMPUTED USING ESTIMATED FLOW(CFS) =       1.36
  TRAVEL TIME THRU SUBAREA BASED ON VELOCITY(FEET/SEC.) =   3.86
  AVERAGE FLOW DEPTH(FEET) =   0.11   TRAVEL TIME(MIN.) =   1.80
  Tc(MIN.) =    8.60
  SUBAREA AREA(ACRES) =     1.00       SUBAREA RUNOFF(CFS) =    2.08
  AREA-AVERAGE RUNOFF COEFFICIENT =  0.356
  TOTAL AREA(ACRES) =        1.1         PEAK FLOW RATE(CFS) =       2.35

  END OF SUBAREA CHANNEL FLOW HYDRAULICS:
  DEPTH(FEET) =  0.15   FLOW VELOCITY(FEET/SEC.) =   4.75
  LONGEST FLOWPATH FROM NODE    566.00 TO NODE    568.00 =     531.71 FEET.

****************************************************************************
  FLOW PROCESS FROM NODE    568.00 TO NODE    569.00 IS CODE =  51
----------------------------------------------------------------------------
  >>>>>COMPUTE TRAPEZOIDAL CHANNEL FLOW<<<<<
  >>>>>TRAVELTIME THRU SUBAREA (EXISTING ELEMENT)<<<<<
============================================================================
```

```
  ELEVATION DATA: UPSTREAM(FEET) =    669.00  DOWNSTREAM(FEET) =    661.00
  CHANNEL LENGTH THRU SUBAREA(FEET) =   108.90   CHANNEL SLOPE =  0.0735
  CHANNEL BASE(FEET) =    3.00   "Z" FACTOR =   2.000
  MANNING'S FACTOR = 0.030   MAXIMUM DEPTH(FEET) =  10.00
   100 YEAR RAINFALL INTENSITY(INCH/HOUR) =  5.776
  *USER SPECIFIED(SUBAREA):
  USER-SPECIFIED RUNOFF COEFFICIENT = .3500
  S.C.S. CURVE NUMBER (AMC II) =   0
  TRAVEL TIME COMPUTED USING ESTIMATED FLOW(CFS) =       3.98
  TRAVEL TIME THRU SUBAREA BASED ON VELOCITY(FEET/SEC.) =   4.74
  AVERAGE FLOW DEPTH(FEET) =   0.24   TRAVEL TIME(MIN.) =   0.38
  Tc(MIN.) =    8.99
  SUBAREA AREA(ACRES) =     1.62       SUBAREA RUNOFF(CFS) =    3.28
  AREA-AVERAGE RUNOFF COEFFICIENT =  0.352
  TOTAL AREA(ACRES) =        2.7         PEAK FLOW RATE(CFS) =       5.56

  END OF SUBAREA CHANNEL FLOW HYDRAULICS:
  DEPTH(FEET) =  0.29   FLOW VELOCITY(FEET/SEC.) =   5.25
  LONGEST FLOWPATH FROM NODE    566.00 TO NODE    569.00 =     640.61 FEET.

****************************************************************************
  FLOW PROCESS FROM NODE    569.00 TO NODE    565.00 IS CODE =  51
----------------------------------------------------------------------------
  >>>>>COMPUTE TRAPEZOIDAL CHANNEL FLOW<<<<<
  >>>>>TRAVELTIME THRU SUBAREA (EXISTING ELEMENT)<<<<<
============================================================================
  ELEVATION DATA: UPSTREAM(FEET) =    661.00  DOWNSTREAM(FEET) =    613.00
  CHANNEL LENGTH THRU SUBAREA(FEET) =   629.84   CHANNEL SLOPE =  0.0762
  CHANNEL BASE(FEET) =    3.00   "Z" FACTOR =   2.000
  MANNING'S FACTOR = 0.030   MAXIMUM DEPTH(FEET) =  10.00
   100 YEAR RAINFALL INTENSITY(INCH/HOUR) =  5.162
  *USER SPECIFIED(SUBAREA):
  USER-SPECIFIED RUNOFF COEFFICIENT = .3500
  S.C.S. CURVE NUMBER (AMC II) =   0
  TRAVEL TIME COMPUTED USING ESTIMATED FLOW(CFS) =       8.52
  TRAVEL TIME THRU SUBAREA BASED ON VELOCITY(FEET/SEC.) =   6.14
  AVERAGE FLOW DEPTH(FEET) =   0.37   TRAVEL TIME(MIN.) =   1.71
  Tc(MIN.) =   10.70
  SUBAREA AREA(ACRES) =     3.27       SUBAREA RUNOFF(CFS) =    5.91
  AREA-AVERAGE RUNOFF COEFFICIENT =  0.351
  TOTAL AREA(ACRES) =        6.0         PEAK FLOW RATE(CFS) =      10.87

  END OF SUBAREA CHANNEL FLOW HYDRAULICS:
  DEPTH(FEET) =  0.43   FLOW VELOCITY(FEET/SEC.) =   6.55
  LONGEST FLOWPATH FROM NODE    566.00 TO NODE    565.00 =    1270.45 FEET.

****************************************************************************
  FLOW PROCESS FROM NODE    565.00 TO NODE    565.00 IS CODE =   1
----------------------------------------------------------------------------
  >>>>>DESIGNATE INDEPENDENT STREAM FOR CONFLUENCE<<<<<
  >>>>>AND COMPUTE VARIOUS CONFLUENCED STREAM VALUES<<<<<
============================================================================
  TOTAL NUMBER OF STREAMS =  2
  CONFLUENCE VALUES USED FOR INDEPENDENT STREAM  2 ARE:
  TIME OF CONCENTRATION(MIN.) =   10.70
  RAINFALL INTENSITY(INCH/HR) =   5.16
  TOTAL STREAM AREA(ACRES) =     6.00
  PEAK FLOW RATE(CFS) AT CONFLUENCE =     10.87

  ** CONFLUENCE DATA **
  STREAM     RUNOFF       Tc      INTENSITY      AREA
  NUMBER      (CFS)     (MIN.)   (INCH/HOUR)    (ACRE)
      1      282.40    18.30        3.651        195.05
```

```
     2       10.87    10.70        5.162          6.00

  RAINFALL INTENSITY AND TIME OF CONCENTRATION RATIO
  CONFLUENCE FORMULA USED FOR  2 STREAMS.

  ** PEAK FLOW RATE TABLE **
  STREAM     RUNOFF      Tc      INTENSITY
  NUMBER      (CFS)    (MIN.)   (INCH/HOUR)
     1      210.63    10.70       5.162
     2      290.09    18.30       3.651

  COMPUTED CONFLUENCE ESTIMATES ARE AS FOLLOWS:
  PEAK FLOW RATE(CFS) =     290.09   Tc(MIN.) =   18.30
  TOTAL AREA(ACRES) =      201.0
  LONGEST FLOWPATH FROM NODE    510.00 TO NODE    565.00 =    4334.65 FEET.

****************************************************************************
  FLOW PROCESS FROM NODE    565.00 TO NODE    565.00 IS CODE =  10
----------------------------------------------------------------------------
  >>>>>MAIN-STREAM MEMORY COPIED ONTO MEMORY BANK # 3 <<<<<
============================================================================

****************************************************************************
  FLOW PROCESS FROM NODE    546.00 TO NODE    570.00 IS CODE =  21
----------------------------------------------------------------------------
  >>>>>RATIONAL METHOD INITIAL SUBAREA ANALYSIS<<<<<
============================================================================
  *USER SPECIFIED(SUBAREA):
  USER-SPECIFIED RUNOFF COEFFICIENT = .3500
  S.C.S. CURVE NUMBER (AMC II) =   0
  INITIAL SUBAREA FLOW-LENGTH(FEET) =    97.72
  UPSTREAM ELEVATION(FEET) =    740.00
  DOWNSTREAM ELEVATION(FEET) =    732.00
  ELEVATION DIFFERENCE(FEET) =      8.00
  SUBAREA OVERLAND TIME OF FLOW(MIN.) =    6.622
   100 YEAR RAINFALL INTENSITY(INCH/HOUR) =  7.034
  SUBAREA RUNOFF(CFS) =      0.25
  TOTAL AREA(ACRES) =      0.10   TOTAL RUNOFF(CFS) =      0.25

****************************************************************************
  FLOW PROCESS FROM NODE    570.00 TO NODE    571.00 IS CODE =  51
----------------------------------------------------------------------------
  >>>>>COMPUTE TRAPEZOIDAL CHANNEL FLOW<<<<<
  >>>>>TRAVELTIME THRU SUBAREA (EXISTING ELEMENT)<<<<<
============================================================================
  ELEVATION DATA: UPSTREAM(FEET) =    732.00  DOWNSTREAM(FEET) =    691.00
  CHANNEL LENGTH THRU SUBAREA(FEET) =   311.45   CHANNEL SLOPE =  0.1316
  CHANNEL BASE(FEET) =    3.00   "Z" FACTOR =   2.000
  MANNING'S FACTOR = 0.030   MAXIMUM DEPTH(FEET) =  10.00
   100 YEAR RAINFALL INTENSITY(INCH/HOUR) =  6.283
  *USER SPECIFIED(SUBAREA):
  USER-SPECIFIED RUNOFF COEFFICIENT = .3500
  S.C.S. CURVE NUMBER (AMC II) =   0
  TRAVEL TIME COMPUTED USING ESTIMATED FLOW(CFS) =       1.58
  TRAVEL TIME THRU SUBAREA BASED ON VELOCITY(FEET/SEC.) =   4.10
  AVERAGE FLOW DEPTH(FEET) =   0.12   TRAVEL TIME(MIN.) =   1.27
  Tc(MIN.) =    7.89
  SUBAREA AREA(ACRES) =     1.21       SUBAREA RUNOFF(CFS) =    2.66
  AREA-AVERAGE RUNOFF COEFFICIENT =  0.350
  TOTAL AREA(ACRES) =        1.3         PEAK FLOW RATE(CFS) =       2.88

  END OF SUBAREA CHANNEL FLOW HYDRAULICS:
  DEPTH(FEET) =  0.17   FLOW VELOCITY(FEET/SEC.) =   5.05
```

```
  LONGEST FLOWPATH FROM NODE    546.00 TO NODE    571.00 =     409.17 FEET.

****************************************************************************
  FLOW PROCESS FROM NODE    571.00 TO NODE    572.00 IS CODE =  51
----------------------------------------------------------------------------
  >>>>>COMPUTE TRAPEZOIDAL CHANNEL FLOW<<<<<
  >>>>>TRAVELTIME THRU SUBAREA (EXISTING ELEMENT)<<<<<
============================================================================
  ELEVATION DATA: UPSTREAM(FEET) =    691.00  DOWNSTREAM(FEET) =    644.00
  CHANNEL LENGTH THRU SUBAREA(FEET) =   422.81   CHANNEL SLOPE =  0.1112
  CHANNEL BASE(FEET) =    3.00   "Z" FACTOR =   2.000
  MANNING'S FACTOR = 0.030   MAXIMUM DEPTH(FEET) =  10.00
   100 YEAR RAINFALL INTENSITY(INCH/HOUR) =  5.681
  *USER SPECIFIED(SUBAREA):
  USER-SPECIFIED RUNOFF COEFFICIENT = .3500
  S.C.S. CURVE NUMBER (AMC II) =   0
  TRAVEL TIME COMPUTED USING ESTIMATED FLOW(CFS) =       3.66
  TRAVEL TIME THRU SUBAREA BASED ON VELOCITY(FEET/SEC.) =   5.28
  AVERAGE FLOW DEPTH(FEET) =   0.20   TRAVEL TIME(MIN.) =   1.33
  Tc(MIN.) =    9.22
  SUBAREA AREA(ACRES) =     0.78       SUBAREA RUNOFF(CFS) =    1.55
  AREA-AVERAGE RUNOFF COEFFICIENT =  0.350
  TOTAL AREA(ACRES) =        2.1         PEAK FLOW RATE(CFS) =       4.16

  END OF SUBAREA CHANNEL FLOW HYDRAULICS:
  DEPTH(FEET) =  0.22   FLOW VELOCITY(FEET/SEC.) =   5.54
  LONGEST FLOWPATH FROM NODE    546.00 TO NODE    572.00 =     831.98 FEET.

****************************************************************************
  FLOW PROCESS FROM NODE    572.00 TO NODE    572.00 IS CODE =   1
----------------------------------------------------------------------------
  >>>>>DESIGNATE INDEPENDENT STREAM FOR CONFLUENCE<<<<<
============================================================================
  TOTAL NUMBER OF STREAMS =  2
  CONFLUENCE VALUES USED FOR INDEPENDENT STREAM  1 ARE:
  TIME OF CONCENTRATION(MIN.) =    9.22
  RAINFALL INTENSITY(INCH/HR) =   5.68
  TOTAL STREAM AREA(ACRES) =     2.09
  PEAK FLOW RATE(CFS) AT CONFLUENCE =      4.16

****************************************************************************
  FLOW PROCESS FROM NODE    573.00 TO NODE    574.00 IS CODE =  21
----------------------------------------------------------------------------
  >>>>>RATIONAL METHOD INITIAL SUBAREA ANALYSIS<<<<<
============================================================================
  *USER SPECIFIED(SUBAREA):
  USER-SPECIFIED RUNOFF COEFFICIENT = .4100
  S.C.S. CURVE NUMBER (AMC II) =   0
  INITIAL SUBAREA FLOW-LENGTH(FEET) =   103.35
  UPSTREAM ELEVATION(FEET) =    696.00
  DOWNSTREAM ELEVATION(FEET) =    695.00
  ELEVATION DIFFERENCE(FEET) =      1.00
  SUBAREA OVERLAND TIME OF FLOW(MIN.) =   10.408
  WARNING: INITIAL SUBAREA FLOW PATH LENGTH IS GREATER THAN
           THE MAXIMUM OVERLAND FLOW LENGTH =    68.70
           (Reference: Table 3-1B of Hydrology Manual)
           THE MAXIMUM OVERLAND FLOW LENGTH IS USED IN Tc CALCULATION!
   100 YEAR RAINFALL INTENSITY(INCH/HOUR) =  5.254
  SUBAREA RUNOFF(CFS) =      0.24
  TOTAL AREA(ACRES) =      0.11   TOTAL RUNOFF(CFS) =      0.24

****************************************************************************
  FLOW PROCESS FROM NODE    574.00 TO NODE    575.00 IS CODE =  51
```

```
----------------------------------------------------------------------------
  >>>>>COMPUTE TRAPEZOIDAL CHANNEL FLOW<<<<<
  >>>>>TRAVELTIME THRU SUBAREA (EXISTING ELEMENT)<<<<<
============================================================================
  ELEVATION DATA: UPSTREAM(FEET) =    695.00  DOWNSTREAM(FEET) =    661.00
  CHANNEL LENGTH THRU SUBAREA(FEET) =   312.08   CHANNEL SLOPE =  0.1089
  CHANNEL BASE(FEET) =    3.00   "Z" FACTOR =   2.000
  MANNING'S FACTOR = 0.030   MAXIMUM DEPTH(FEET) =  10.00
   100 YEAR RAINFALL INTENSITY(INCH/HOUR) =  4.780
  *USER SPECIFIED(SUBAREA):
  USER-SPECIFIED RUNOFF COEFFICIENT = .3500
  S.C.S. CURVE NUMBER (AMC II) =   0
  TRAVEL TIME COMPUTED USING ESTIMATED FLOW(CFS) =       0.95
  TRAVEL TIME THRU SUBAREA BASED ON VELOCITY(FEET/SEC.) =   3.17
  AVERAGE FLOW DEPTH(FEET) =   0.09   TRAVEL TIME(MIN.) =   1.64
  Tc(MIN.) =   12.05
  SUBAREA AREA(ACRES) =     0.85       SUBAREA RUNOFF(CFS) =    1.42
  AREA-AVERAGE RUNOFF COEFFICIENT =  0.357
  TOTAL AREA(ACRES) =        1.0         PEAK FLOW RATE(CFS) =       1.64

  END OF SUBAREA CHANNEL FLOW HYDRAULICS:
  DEPTH(FEET) =  0.13   FLOW VELOCITY(FEET/SEC.) =   3.97
  LONGEST FLOWPATH FROM NODE    573.00 TO NODE    575.00 =     415.43 FEET.

****************************************************************************
  FLOW PROCESS FROM NODE    575.00 TO NODE    572.00 IS CODE =  51
----------------------------------------------------------------------------
  >>>>>COMPUTE TRAPEZOIDAL CHANNEL FLOW<<<<<
  >>>>>TRAVELTIME THRU SUBAREA (EXISTING ELEMENT)<<<<<
============================================================================
  ELEVATION DATA: UPSTREAM(FEET) =    661.00  DOWNSTREAM(FEET) =    644.00
  CHANNEL LENGTH THRU SUBAREA(FEET) =   180.06   CHANNEL SLOPE =  0.0944
  CHANNEL BASE(FEET) =    3.00   "Z" FACTOR =   2.000
  MANNING'S FACTOR = 0.030   MAXIMUM DEPTH(FEET) =  10.00
   100 YEAR RAINFALL INTENSITY(INCH/HOUR) =  4.603
  *USER SPECIFIED(SUBAREA):
  USER-SPECIFIED RUNOFF COEFFICIENT = .3500
  S.C.S. CURVE NUMBER (AMC II) =   0
  TRAVEL TIME COMPUTED USING ESTIMATED FLOW(CFS) =       2.12
  TRAVEL TIME THRU SUBAREA BASED ON VELOCITY(FEET/SEC.) =   4.12
  AVERAGE FLOW DEPTH(FEET) =   0.16   TRAVEL TIME(MIN.) =   0.73
  Tc(MIN.) =   12.78
  SUBAREA AREA(ACRES) =     0.60       SUBAREA RUNOFF(CFS) =    0.97
  AREA-AVERAGE RUNOFF COEFFICIENT =  0.354
  TOTAL AREA(ACRES) =        1.6         PEAK FLOW RATE(CFS) =       2.54

  END OF SUBAREA CHANNEL FLOW HYDRAULICS:
  DEPTH(FEET) =  0.17   FLOW VELOCITY(FEET/SEC.) =   4.40
  LONGEST FLOWPATH FROM NODE    573.00 TO NODE    572.00 =     595.49 FEET.

****************************************************************************
  FLOW PROCESS FROM NODE    572.00 TO NODE    572.00 IS CODE =   1
----------------------------------------------------------------------------
  >>>>>DESIGNATE INDEPENDENT STREAM FOR CONFLUENCE<<<<<
  >>>>>AND COMPUTE VARIOUS CONFLUENCED STREAM VALUES<<<<<
============================================================================
  TOTAL NUMBER OF STREAMS =  2
  CONFLUENCE VALUES USED FOR INDEPENDENT STREAM  2 ARE:
  TIME OF CONCENTRATION(MIN.) =   12.78
  RAINFALL INTENSITY(INCH/HR) =   4.60
  TOTAL STREAM AREA(ACRES) =     1.56
  PEAK FLOW RATE(CFS) AT CONFLUENCE =      2.54
```

```
  ** CONFLUENCE DATA **
  STREAM     RUNOFF       Tc      INTENSITY      AREA
  NUMBER      (CFS)     (MIN.)   (INCH/HOUR)    (ACRE)
      1        4.16     9.22        5.681          2.09
      2        2.54    12.78        4.603          1.56

  RAINFALL INTENSITY AND TIME OF CONCENTRATION RATIO
  CONFLUENCE FORMULA USED FOR  2 STREAMS.

  ** PEAK FLOW RATE TABLE **
  STREAM     RUNOFF      Tc      INTENSITY
  NUMBER      (CFS)    (MIN.)   (INCH/HOUR)
      1        5.99     9.22       5.681
      2        5.91    12.78       4.603

  COMPUTED CONFLUENCE ESTIMATES ARE AS FOLLOWS:
  PEAK FLOW RATE(CFS) =       5.99   Tc(MIN.) =    9.22
  TOTAL AREA(ACRES) =        3.7
  LONGEST FLOWPATH FROM NODE    546.00 TO NODE    572.00 =     831.98 FEET.

****************************************************************************
  FLOW PROCESS FROM NODE    572.00 TO NODE    576.00 IS CODE =  51
----------------------------------------------------------------------------
  >>>>>COMPUTE TRAPEZOIDAL CHANNEL FLOW<<<<<
  >>>>>TRAVELTIME THRU SUBAREA (EXISTING ELEMENT)<<<<<
============================================================================
  ELEVATION DATA: UPSTREAM(FEET) =    644.00  DOWNSTREAM(FEET) =    624.00
  CHANNEL LENGTH THRU SUBAREA(FEET) =   252.06   CHANNEL SLOPE =  0.0793
  CHANNEL BASE(FEET) =    3.00   "Z" FACTOR =   2.000
  MANNING'S FACTOR = 0.030   MAXIMUM DEPTH(FEET) =  10.00
   100 YEAR RAINFALL INTENSITY(INCH/HOUR) =  5.415
  *USER SPECIFIED(SUBAREA):
  USER-SPECIFIED RUNOFF COEFFICIENT = .3500
  S.C.S. CURVE NUMBER (AMC II) =   0
  TRAVEL TIME COMPUTED USING ESTIMATED FLOW(CFS) =       7.20
  TRAVEL TIME THRU SUBAREA BASED ON VELOCITY(FEET/SEC.) =   5.90
  AVERAGE FLOW DEPTH(FEET) =   0.33   TRAVEL TIME(MIN.) =   0.71
  Tc(MIN.) =    9.93
  SUBAREA AREA(ACRES) =     1.28       SUBAREA RUNOFF(CFS) =    2.43
  AREA-AVERAGE RUNOFF COEFFICIENT =  0.351
  TOTAL AREA(ACRES) =        4.9         PEAK FLOW RATE(CFS) =       9.38

  END OF SUBAREA CHANNEL FLOW HYDRAULICS:
  DEPTH(FEET) =  0.39   FLOW VELOCITY(FEET/SEC.) =   6.44
  LONGEST FLOWPATH FROM NODE    546.00 TO NODE    576.00 =    1084.04 FEET.

****************************************************************************
  FLOW PROCESS FROM NODE    576.00 TO NODE    565.00 IS CODE =  51
----------------------------------------------------------------------------
  >>>>>COMPUTE TRAPEZOIDAL CHANNEL FLOW<<<<<
  >>>>>TRAVELTIME THRU SUBAREA (EXISTING ELEMENT)<<<<<
============================================================================
  ELEVATION DATA: UPSTREAM(FEET) =    624.00  DOWNSTREAM(FEET) =    613.00
  CHANNEL LENGTH THRU SUBAREA(FEET) =   228.77   CHANNEL SLOPE =  0.0481
  CHANNEL BASE(FEET) =    3.00   "Z" FACTOR =   2.000
  MANNING'S FACTOR = 0.030   MAXIMUM DEPTH(FEET) =  10.00
   100 YEAR RAINFALL INTENSITY(INCH/HOUR) =  5.181
  *USER SPECIFIED(SUBAREA):
  USER-SPECIFIED RUNOFF COEFFICIENT = .3500
  S.C.S. CURVE NUMBER (AMC II) =   0
  TRAVEL TIME COMPUTED USING ESTIMATED FLOW(CFS) =       9.79
  TRAVEL TIME THRU SUBAREA BASED ON VELOCITY(FEET/SEC.) =   5.42
  AVERAGE FLOW DEPTH(FEET) =   0.46   TRAVEL TIME(MIN.) =   0.70
```

```
  Tc(MIN.) =   10.64
  SUBAREA AREA(ACRES) =     0.45       SUBAREA RUNOFF(CFS) =    0.82
  AREA-AVERAGE RUNOFF COEFFICIENT =  0.351
  TOTAL AREA(ACRES) =        5.4         PEAK FLOW RATE(CFS) =       9.79

  END OF SUBAREA CHANNEL FLOW HYDRAULICS:
  DEPTH(FEET) =  0.46   FLOW VELOCITY(FEET/SEC.) =   5.42
  LONGEST FLOWPATH FROM NODE    546.00 TO NODE    565.00 =    1312.81 FEET.

****************************************************************************
  FLOW PROCESS FROM NODE    565.00 TO NODE    565.00 IS CODE =  11
----------------------------------------------------------------------------
  >>>>>CONFLUENCE MEMORY BANK # 3 WITH THE MAIN-STREAM MEMORY<<<<<
============================================================================

  ** MAIN STREAM CONFLUENCE DATA **
  STREAM     RUNOFF      Tc      INTENSITY     AREA
  NUMBER      (CFS)    (MIN.)   (INCH/HOUR)   (ACRE)
      1        9.79    10.64       5.181        5.38
  LONGEST FLOWPATH FROM NODE    546.00 TO NODE    565.00 =    1312.81 FEET.

  ** MEMORY BANK #  3 CONFLUENCE DATA **
  STREAM     RUNOFF      Tc      INTENSITY     AREA
  NUMBER      (CFS)    (MIN.)   (INCH/HOUR)   (ACRE)
      1      290.09    18.30       3.651      201.05
  LONGEST FLOWPATH FROM NODE    510.00 TO NODE    565.00 =    4334.65 FEET.

  ** PEAK FLOW RATE TABLE **
  STREAM    RUNOFF       Tc      INTENSITY
  NUMBER     (CFS)     (MIN.)   (INCH/HOUR)
      1     178.42      10.64        5.181
      2     296.99      18.30        3.651

  COMPUTED CONFLUENCE ESTIMATES ARE AS FOLLOWS:
  PEAK FLOW RATE(CFS) =     296.99   Tc(MIN.) =   18.30
  TOTAL AREA(ACRES) =      206.4

****************************************************************************
  FLOW PROCESS FROM NODE    565.00 TO NODE    567.00 IS CODE =  51
----------------------------------------------------------------------------
  >>>>>COMPUTE TRAPEZOIDAL CHANNEL FLOW<<<<<
  >>>>>TRAVELTIME THRU SUBAREA (EXISTING ELEMENT)<<<<<
============================================================================
  ELEVATION DATA: UPSTREAM(FEET) =    613.00  DOWNSTREAM(FEET) =    608.00
  CHANNEL LENGTH THRU SUBAREA(FEET) =   286.20   CHANNEL SLOPE =  0.0175
  CHANNEL BASE(FEET) =    3.00   "Z" FACTOR =   2.000
  MANNING'S FACTOR = 0.030   MAXIMUM DEPTH(FEET) =  10.00
   100 YEAR RAINFALL INTENSITY(INCH/HOUR) =  3.589
  *USER SPECIFIED(SUBAREA):
  USER-SPECIFIED RUNOFF COEFFICIENT = .4100
  S.C.S. CURVE NUMBER (AMC II) =   0
  TRAVEL TIME COMPUTED USING ESTIMATED FLOW(CFS) =     303.14
  TRAVEL TIME THRU SUBAREA BASED ON VELOCITY(FEET/SEC.) =   9.61
  AVERAGE FLOW DEPTH(FEET) =   3.29   TRAVEL TIME(MIN.) =   0.50
  Tc(MIN.) =   18.80
  SUBAREA AREA(ACRES) =     8.36       SUBAREA RUNOFF(CFS) =   12.30
  AREA-AVERAGE RUNOFF COEFFICIENT =  0.386
  TOTAL AREA(ACRES) =      214.8         PEAK FLOW RATE(CFS) =     297.35

  END OF SUBAREA CHANNEL FLOW HYDRAULICS:
  DEPTH(FEET) =  3.26   FLOW VELOCITY(FEET/SEC.) =   9.57
  LONGEST FLOWPATH FROM NODE    510.00 TO NODE    567.00 =    4620.85 FEET.
============================================================================
```

```
  END OF STUDY SUMMARY:
  TOTAL AREA(ACRES)     =      214.8  TC(MIN.) =     18.80
  PEAK FLOW RATE(CFS)   =     297.35
============================================================================
============================================================================
  END OF RATIONAL METHOD ANALYSIS
```

BASIN C

FUSCOE ENGINEERING
6390 Greenwich Drive, Suite 170
San Diego, California 92122
tel 858.554.1500 • fax 858.597.0335
www.fuscoe.com

Job Name: Eden Hills
Existing Hydrology
100 year Design Storm
Job #: 2690-007-02

Date: Aug 2013
EDEN300.DAT
Run Name: 300 Series

Page: 1

Node to Node		Code	Elev 1 (feet)	Elev 2 (feet)	Length (feet)	C or Fric Co.	Area (ac.)	Comments
300	301	2	1205.0	1200.0	105.30	0.35	0.10	
301	302	5	1200.0	1050.0	986.40	0.35	9.88	
302	303	5	1050.0	854.0	793.60	0.35	14.180	
303	303	1	-	-	-	-	-	1 of 2
304	305	2	1090.0	1086.0	86.20	0.35	0.11	
305	306	5	1086.0	937.0	498.30	0.35	3.67	
306	307	5	937.0	907.0	295.30	0.35	5.61	
307	303	5	907.0	854.0	552.70	0.35	7.98	
303	303	1	-	-	-	-	-	2 of 2
303	308	5	854.0	802.0	424.70	0.35	3.51	
308	309	5	802.0	773.0	295.40	0.35	2.29	
309	310	5	773.0	748.0	327.30	0.35	2.68	
310	311	5	748.0	738.0	190.90	0.35	0.67	
311	311	1	-	-	-	-	-	1 of 2
312	313	2	978.0	965.0	71.60	0.35	0.11	
313	314	5	965.0	901.0	217.70	0.35	0.53	
314	315	5	901.0	795.0	358.60	0.35	2.86	
315	316	5	795.0	768.0	253.80	0.35	2.31	
316	311	5	768.0	738.0	372.30	0.35	2.06	
311	311	1	-	-	-	-	-	2 of 2
311	317	5	738.0	726.0	226.60	0.35	1.62	
317	317	1	-	-	-	-	-	1 of 3
318	319	2	890.0	838.0	197.40	0.35	0.11	
319	317	5	838.0	726.0	630.70	0.35	1.57	
317	317	1	-	-	-	-	-	2 of 3
300	320	2	1205.0	1200.0	86.50	0.35	0.11	
320	321	5	1200.0	1100.0	799.00	0.35	5.47	
321	322	5	1100.0	895.0	771.10	0.35	6.24	
322	323	5	895.0	772.0	849.80	0.35	4.76	
323	324	5	772.0	732.0	424.10	0.35	1.80	
324	317	5	732.0	726.0	140.10	0.35	0.36	
317	317	1	-	-	-	-	-	3 of 3

FUSCOE ENGINEERING
6390 Greenwich Drive, Suite 170
San Diego, California 92122
tel 858.554.1500 • fax 858.597.0335
www.fuscoe.com

Job Name: Eden Hills
Existing Hydrology
100 year Design Storm
Job #: 2690-007-02

Date: Aug 2013
Run Name: 300 Series
Page: 2

Node to Node		Code	Elev 1 (feet)	Elev 2 (feet)	Length (feet)	C or Fric Co.	Area (ac.)	Comments
317	325	5	726.0	708.0	323.30	0.35	2.24	
325	326	5	708.0	701.0	148.20	0.35	0.83	
326	327	5	701.0	690.0	273.10	0.35	1.46	
327	328	5	690.0	689.0	82.80	0.35	0.53	
328	329	5	689.0	684.0	231.10	0.35	0.48	
329	329	10	-	-	-	-	-	Save to Bank 1
300	330	2	1205.0	1200.0	112.80	0.35	0.10	
330	331	5	1200.0	1075.0	815.50	0.35	6.99	
331	332	5	1075.0	935.0	619.60	0.35	12.76	
332	333	5	935.0	865.0	485.10	0.35	3.25	
333	334	5	865.0	823.0	269.90	0.35	1.58	
334	334	1	-	-	-	-	-	1 of 2
335	336	2	965.0	936.0	89.11	0.35	0.10	
336	337	5	936.0	861.0	354.00	0.35	2.41	
337	334	5	861.0	823.0	269.00	0.35	1.72	
334	334	1	-	-	-	-	-	2 of 2
334	338	5	823.0	766.0	504.10	0.35	5.25	
338	338	1	-	-	-	-	-	1 of 2
339	340	2	896.0	883.0	76.00	0.35	0.10	
340	338	5	883.0	766.0	609.30	0.35	1.91	
338	338	1	-	-	-	-	-	2 of 2
338	341	5	766.0	729.0	566.20	0.35	4.53	
341	342	5	729.0	706.0	385.40	0.35	4.93	
342	343	5	706.0	696.0	331.50	0.35	2.01	
343	329	5	696.0	684.0	418.60	0.35	0.71	
329	329	11	-	-	-	-	-	Confl. w/ Bank 1
329	329	12	-	-	-	-	-	Clear Bank 1
329	344	5	684.0	683.0	279.20	0.35	1.67	
344	344	10	-	-	-	-	-	Save to Bank 2
345	346	2	878.0	871.0	95.30	0.35	0.10	
346	347	5	871.0	846.0	182.10	0.35	0.36	
347	348	5	846.0	768.0	377.10	0.35	1.56	
348	349	5	768.0	752.0	132.70	0.35	0.93	
349	350	5	752.0	739.0	192.30	0.35	0.72	
350	351	5	739.0	705.0	470.90	0.35	0.66	
351	351	1	-	-	-	-	-	1 of 2

FUSCOE
ENGINEERING
6390 Greenwich Drive, Suite 170
San Diego, California 92122
tel 858.554.1500 • fax 858.597.0335
www.fuscoe.com

Job Name: Eden Hills
Existing Hydrology
100 year Design Storm
Job #: 2690-007-02

Date: Aug 2013
Run Name: 300 Series
Page: 3

Node to Node		Code	Elev 1 (feet)	Elev 2 (feet)	Length (feet)	C or Fric Co.	Area (ac.)	Comments
352	353	2	845.0	823.0	132.50	0.35	0.10	
353	354	5	823.0	765.0	355.00	0.35	0.86	
354	355	5	765.0	727.0	394.90	0.35	3.30	
355	351	5	727.0	705.0	461.20	0.35	4.62	
351	351	1	-	-	-	-	-	2 of 2
351	344	5	705.0	684.0	586.30	0.35	11.24	
344	344	11	-	-	-	-	-	Confl. w/ Bank 2
345	345	12	-	-	-	-	-	Clear Bank 2
344	356	5	684.0	670.0	615.60	0.35	5.78	
356	356	1	-	-	-	-	-	1 of 3
357	358	2	698.0	693.0	91.59	0.35	0.11	
358	356	5	693.0	670.0	1098.30	0.35	4.59	
356	356	1	-	-	-	-	-	2 of 3
359	360	2	739.0	733.0	108.30	0.35	0.10	
360	356	5	733.0	670.0	677.40	0.35	2.38	
356	356	1	-	-	-	-	-	3 of 3

```
****************************************************************************

            RATIONAL METHOD HYDROLOGY COMPUTER PROGRAM PACKAGE
            Reference: SAN DIEGO COUNTY FLOOD CONTROL DISTRICT
                         2003,1985,1981 HYDROLOGY MANUAL
         (c) Copyright 1982-2012 Advanced Engineering Software (aes)
             Ver. 19.0 Release Date: 06/01/2012  License ID 1355

                           Analysis prepared by:

                             Fuscoe Engineering
                             6390 Greenwich Dr.
                                 Suite 170
                            San Diego, CA 92122

 ************************** DESCRIPTION OF STUDY **************************
* VALIANO                                                                 *
* EXISTING HYDROLOGY STUDY - 300 SERIES                                   *
* OCTOBER 20, 2014                                                        *
 **************************************************************************

  FILE NAME: EDEN300.DAT
  TIME/DATE OF STUDY: 10:07 10/20/2014
----------------------------------------------------------------------------
  USER SPECIFIED HYDROLOGY AND HYDRAULIC MODEL INFORMATION:
----------------------------------------------------------------------------
  2003 SAN DIEGO MANUAL CRITERIA

  USER SPECIFIED STORM EVENT(YEAR) = 100.00
  6-HOUR DURATION PRECIPITATION (INCHES) =   3.200
  SPECIFIED MINIMUM PIPE SIZE(INCH) =  12.00
  SPECIFIED PERCENT OF GRADIENTS(DECIMAL) TO USE FOR FRICTION SLOPE = 0.90
  SPECIFIED CONSTANT RUNOFF COEFFICIENT = 0.350
  NOTE: USE MODIFIED RATIONAL METHOD PROCEDURES FOR CONFLUENCE ANALYSIS
  *USER-DEFINED STREET-SECTIONS FOR COUPLED PIPEFLOW AND STREETFLOW MODEL*
     HALF-  CROWN TO   STREET-CROSSFALL:   CURB  GUTTER-GEOMETRIES:  MANNING
     WIDTH  CROSSFALL  IN-  / OUT-/PARK-  HEIGHT  WIDTH  LIP   HIKE  FACTOR
NO.   (FT)     (FT)    SIDE / SIDE/ WAY    (FT)    (FT)  (FT)  (FT)    (n)
===  =====  =========  =================  ======  ===== ====== ===== =======
  1   30.0     20.0    0.018/0.018/0.020   0.67    2.00 0.0312 0.167 0.0150

  GLOBAL STREET FLOW-DEPTH CONSTRAINTS:
    1. Relative Flow-Depth =  0.00 FEET
       as (Maximum Allowable Street Flow Depth) - (Top-of-Curb)
    2. (Depth)*(Velocity) Constraint =  6.0 (FT*FT/S)
  *SIZE PIPE WITH A FLOW CAPACITY GREATER THAN
   OR EQUAL TO THE UPSTREAM TRIBUTARY PIPE.*

****************************************************************************
  FLOW PROCESS FROM NODE    300.00 TO NODE    301.00 IS CODE =  21
----------------------------------------------------------------------------
  >>>>>RATIONAL METHOD INITIAL SUBAREA ANALYSIS<<<<<
============================================================================
  *USER SPECIFIED(GLOBAL):
  NATURAL DESERT LANDSCAPING RUNOFF COEFFICIENT = .3500
  S.C.S. CURVE NUMBER (AMC II) =  85
  INITIAL SUBAREA FLOW-LENGTH(FEET) =   105.30
  UPSTREAM ELEVATION(FEET) =   1205.00
  DOWNSTREAM ELEVATION(FEET) =   1200.00
  ELEVATION DIFFERENCE(FEET) =      5.00
  SUBAREA OVERLAND TIME OF FLOW(MIN.) =    8.032
  WARNING: INITIAL SUBAREA FLOW PATH LENGTH IS GREATER THAN
```

```
          THE MAXIMUM OVERLAND FLOW LENGTH =   100.00
          (Reference: Table 3-1B of Hydrology Manual)
          THE MAXIMUM OVERLAND FLOW LENGTH IS USED IN Tc CALCULATION!
   100 YEAR RAINFALL INTENSITY(INCH/HOUR) =  6.210
  SUBAREA RUNOFF(CFS) =      0.22
  TOTAL AREA(ACRES) =      0.10   TOTAL RUNOFF(CFS) =      0.22

****************************************************************************
  FLOW PROCESS FROM NODE    301.00 TO NODE    302.00 IS CODE =  51
----------------------------------------------------------------------------
  >>>>>COMPUTE TRAPEZOIDAL CHANNEL FLOW<<<<<
  >>>>>TRAVELTIME THRU SUBAREA (EXISTING ELEMENT)<<<<<
============================================================================
  ELEVATION DATA: UPSTREAM(FEET) =   1200.00  DOWNSTREAM(FEET) =   1050.00
  CHANNEL LENGTH THRU SUBAREA(FEET) =   986.40   CHANNEL SLOPE =  0.1521
  CHANNEL BASE(FEET) =    3.00   "Z" FACTOR =   2.000
  MANNING'S FACTOR = 0.030   MAXIMUM DEPTH(FEET) =  10.00
   100 YEAR RAINFALL INTENSITY(INCH/HOUR) =  5.365
  *USER SPECIFIED(GLOBAL):
  NATURAL DESERT LANDSCAPING RUNOFF COEFFICIENT = .3500
  S.C.S. CURVE NUMBER (AMC II) =  85
  TRAVEL TIME COMPUTED USING ESTIMATED FLOW(CFS) =       9.54
  TRAVEL TIME THRU SUBAREA BASED ON VELOCITY(FEET/SEC.) =   8.04
  AVERAGE FLOW DEPTH(FEET) =   0.33   TRAVEL TIME(MIN.) =   2.05
  Tc(MIN.) =   10.08
  SUBAREA AREA(ACRES) =     9.88       SUBAREA RUNOFF(CFS) =   18.55
  AREA-AVERAGE RUNOFF COEFFICIENT =  0.350
  TOTAL AREA(ACRES) =       10.0         PEAK FLOW RATE(CFS) =      18.74

  END OF SUBAREA CHANNEL FLOW HYDRAULICS:
  DEPTH(FEET) =  0.48   FLOW VELOCITY(FEET/SEC.) =   9.91
  LONGEST FLOWPATH FROM NODE    300.00 TO NODE    302.00 =    1091.70 FEET.

****************************************************************************
  FLOW PROCESS FROM NODE    302.00 TO NODE    303.00 IS CODE =  51
----------------------------------------------------------------------------
  >>>>>COMPUTE TRAPEZOIDAL CHANNEL FLOW<<<<<
  >>>>>TRAVELTIME THRU SUBAREA (EXISTING ELEMENT)<<<<<
============================================================================
  ELEVATION DATA: UPSTREAM(FEET) =   1050.00  DOWNSTREAM(FEET) =    854.00
  CHANNEL LENGTH THRU SUBAREA(FEET) =   793.60   CHANNEL SLOPE =  0.2470
  CHANNEL BASE(FEET) =    3.00   "Z" FACTOR =   2.000
  MANNING'S FACTOR = 0.030   MAXIMUM DEPTH(FEET) =  10.00
   100 YEAR RAINFALL INTENSITY(INCH/HOUR) =  5.058
  *USER SPECIFIED(GLOBAL):
  NATURAL DESERT LANDSCAPING RUNOFF COEFFICIENT = .3500
  S.C.S. CURVE NUMBER (AMC II) =  85
  TRAVEL TIME COMPUTED USING ESTIMATED FLOW(CFS) =      31.22
  TRAVEL TIME THRU SUBAREA BASED ON VELOCITY(FEET/SEC.) =  13.72
  AVERAGE FLOW DEPTH(FEET) =   0.55   TRAVEL TIME(MIN.) =   0.96
  Tc(MIN.) =   11.04
  SUBAREA AREA(ACRES) =    14.10       SUBAREA RUNOFF(CFS) =   24.96
  AREA-AVERAGE RUNOFF COEFFICIENT =  0.350
  TOTAL AREA(ACRES) =       24.1         PEAK FLOW RATE(CFS) =      42.63

  END OF SUBAREA CHANNEL FLOW HYDRAULICS:
  DEPTH(FEET) =  0.66   FLOW VELOCITY(FEET/SEC.) =  14.98
  LONGEST FLOWPATH FROM NODE    300.00 TO NODE    303.00 =    1885.30 FEET.

****************************************************************************
  FLOW PROCESS FROM NODE    303.00 TO NODE    303.00 IS CODE =   1
----------------------------------------------------------------------------
  >>>>>DESIGNATE INDEPENDENT STREAM FOR CONFLUENCE<<<<<
```

```
============================================================================
  TOTAL NUMBER OF STREAMS =  2
  CONFLUENCE VALUES USED FOR INDEPENDENT STREAM  1 ARE:
  TIME OF CONCENTRATION(MIN.) =   11.04
  RAINFALL INTENSITY(INCH/HR) =   5.06
  TOTAL STREAM AREA(ACRES) =    24.08
  PEAK FLOW RATE(CFS) AT CONFLUENCE =     42.63

****************************************************************************
  FLOW PROCESS FROM NODE    304.00 TO NODE    305.00 IS CODE =  21
----------------------------------------------------------------------------
  >>>>>RATIONAL METHOD INITIAL SUBAREA ANALYSIS<<<<<
============================================================================
  *USER SPECIFIED(GLOBAL):
  NATURAL DESERT LANDSCAPING RUNOFF COEFFICIENT = .3500
  S.C.S. CURVE NUMBER (AMC II) =  85
  INITIAL SUBAREA FLOW-LENGTH(FEET) =    86.20
  UPSTREAM ELEVATION(FEET) =   1090.00
  DOWNSTREAM ELEVATION(FEET) =   1086.00
  ELEVATION DIFFERENCE(FEET) =      4.00
  SUBAREA OVERLAND TIME OF FLOW(MIN.) =    7.515
   100 YEAR RAINFALL INTENSITY(INCH/HOUR) =  6.483
  SUBAREA RUNOFF(CFS) =      0.25
  TOTAL AREA(ACRES) =      0.11   TOTAL RUNOFF(CFS) =      0.25

****************************************************************************
  FLOW PROCESS FROM NODE    305.00 TO NODE    306.00 IS CODE =  51
----------------------------------------------------------------------------
  >>>>>COMPUTE TRAPEZOIDAL CHANNEL FLOW<<<<<
  >>>>>TRAVELTIME THRU SUBAREA (EXISTING ELEMENT)<<<<<
============================================================================
  ELEVATION DATA: UPSTREAM(FEET) =   1086.00  DOWNSTREAM(FEET) =    937.00
  CHANNEL LENGTH THRU SUBAREA(FEET) =   498.30   CHANNEL SLOPE =  0.2990
  CHANNEL BASE(FEET) =    3.00   "Z" FACTOR =   2.000
  MANNING'S FACTOR = 0.030   MAXIMUM DEPTH(FEET) =  10.00
   100 YEAR RAINFALL INTENSITY(INCH/HOUR) =  5.933
  *USER SPECIFIED(GLOBAL):
  NATURAL DESERT LANDSCAPING RUNOFF COEFFICIENT = .3500
  S.C.S. CURVE NUMBER (AMC II) =  85
  TRAVEL TIME COMPUTED USING ESTIMATED FLOW(CFS) =       4.07
  TRAVEL TIME THRU SUBAREA BASED ON VELOCITY(FEET/SEC.) =   7.50
  AVERAGE FLOW DEPTH(FEET) =   0.16   TRAVEL TIME(MIN.) =   1.11
  Tc(MIN.) =    8.62
  SUBAREA AREA(ACRES) =     3.67       SUBAREA RUNOFF(CFS) =    7.62
  AREA-AVERAGE RUNOFF COEFFICIENT =  0.350
  TOTAL AREA(ACRES) =        3.8         PEAK FLOW RATE(CFS) =       7.85

  END OF SUBAREA CHANNEL FLOW HYDRAULICS:
  DEPTH(FEET) =  0.24   FLOW VELOCITY(FEET/SEC.) =   9.43
  LONGEST FLOWPATH FROM NODE    304.00 TO NODE    306.00 =     584.50 FEET.

****************************************************************************
  FLOW PROCESS FROM NODE    306.00 TO NODE    307.00 IS CODE =  51
----------------------------------------------------------------------------
  >>>>>COMPUTE TRAPEZOIDAL CHANNEL FLOW<<<<<
  >>>>>TRAVELTIME THRU SUBAREA (EXISTING ELEMENT)<<<<<
============================================================================
  ELEVATION DATA: UPSTREAM(FEET) =    937.00  DOWNSTREAM(FEET) =    907.00
  CHANNEL LENGTH THRU SUBAREA(FEET) =   295.30   CHANNEL SLOPE =  0.1016
  CHANNEL BASE(FEET) =    3.00   "Z" FACTOR =   2.000
  MANNING'S FACTOR = 0.030   MAXIMUM DEPTH(FEET) =  10.00
   100 YEAR RAINFALL INTENSITY(INCH/HOUR) =  5.667
  *USER SPECIFIED(GLOBAL):
```

```
  NATURAL DESERT LANDSCAPING RUNOFF COEFFICIENT = .3500
  S.C.S. CURVE NUMBER (AMC II) =  85
  TRAVEL TIME COMPUTED USING ESTIMATED FLOW(CFS) =      13.42
  TRAVEL TIME THRU SUBAREA BASED ON VELOCITY(FEET/SEC.) =   7.74
  AVERAGE FLOW DEPTH(FEET) =   0.45   TRAVEL TIME(MIN.) =   0.64
  Tc(MIN.) =    9.26
  SUBAREA AREA(ACRES) =     5.61       SUBAREA RUNOFF(CFS) =   11.13
  AREA-AVERAGE RUNOFF COEFFICIENT =  0.350
  TOTAL AREA(ACRES) =        9.4         PEAK FLOW RATE(CFS) =      18.62

  END OF SUBAREA CHANNEL FLOW HYDRAULICS:
  DEPTH(FEET) =  0.53   FLOW VELOCITY(FEET/SEC.) =   8.63
  LONGEST FLOWPATH FROM NODE    304.00 TO NODE    307.00 =     879.80 FEET.

****************************************************************************
  FLOW PROCESS FROM NODE    307.00 TO NODE    303.00 IS CODE =  51
----------------------------------------------------------------------------
  >>>>>COMPUTE TRAPEZOIDAL CHANNEL FLOW<<<<<
  >>>>>TRAVELTIME THRU SUBAREA (EXISTING ELEMENT)<<<<<
============================================================================
  ELEVATION DATA: UPSTREAM(FEET) =    907.00  DOWNSTREAM(FEET) =    854.00
  CHANNEL LENGTH THRU SUBAREA(FEET) =   552.70   CHANNEL SLOPE =  0.0959
  CHANNEL BASE(FEET) =    3.00   "Z" FACTOR =   2.000
  MANNING'S FACTOR = 0.030   MAXIMUM DEPTH(FEET) =  10.00
   100 YEAR RAINFALL INTENSITY(INCH/HOUR) =  5.307
  *USER SPECIFIED(GLOBAL):
  NATURAL DESERT LANDSCAPING RUNOFF COEFFICIENT = .3500
  S.C.S. CURVE NUMBER (AMC II) =  85
  TRAVEL TIME COMPUTED USING ESTIMATED FLOW(CFS) =      26.04
  TRAVEL TIME THRU SUBAREA BASED ON VELOCITY(FEET/SEC.) =   9.29
  AVERAGE FLOW DEPTH(FEET) =   0.65   TRAVEL TIME(MIN.) =   0.99
  Tc(MIN.) =   10.25
  SUBAREA AREA(ACRES) =     7.98       SUBAREA RUNOFF(CFS) =   14.82
  AREA-AVERAGE RUNOFF COEFFICIENT =  0.350
  TOTAL AREA(ACRES) =       17.4         PEAK FLOW RATE(CFS) =      32.26

  END OF SUBAREA CHANNEL FLOW HYDRAULICS:
  DEPTH(FEET) =  0.73   FLOW VELOCITY(FEET/SEC.) =   9.92
  LONGEST FLOWPATH FROM NODE    304.00 TO NODE    303.00 =    1432.50 FEET.

****************************************************************************
  FLOW PROCESS FROM NODE    303.00 TO NODE    303.00 IS CODE =   1
----------------------------------------------------------------------------
  >>>>>DESIGNATE INDEPENDENT STREAM FOR CONFLUENCE<<<<<
  >>>>>AND COMPUTE VARIOUS CONFLUENCED STREAM VALUES<<<<<
============================================================================
  TOTAL NUMBER OF STREAMS =  2
  CONFLUENCE VALUES USED FOR INDEPENDENT STREAM  2 ARE:
  TIME OF CONCENTRATION(MIN.) =   10.25
  RAINFALL INTENSITY(INCH/HR) =   5.31
  TOTAL STREAM AREA(ACRES) =    17.37
  PEAK FLOW RATE(CFS) AT CONFLUENCE =     32.26

  ** CONFLUENCE DATA **
  STREAM     RUNOFF       Tc      INTENSITY      AREA
  NUMBER      (CFS)     (MIN.)   (INCH/HOUR)    (ACRE)
      1       42.63    11.04        5.058         24.08
      2       32.26    10.25        5.307         17.37

  RAINFALL INTENSITY AND TIME OF CONCENTRATION RATIO
  CONFLUENCE FORMULA USED FOR  2 STREAMS.

  ** PEAK FLOW RATE TABLE **
```

```
  STREAM     RUNOFF      Tc      INTENSITY
  NUMBER      (CFS)    (MIN.)   (INCH/HOUR)
     1        71.82    10.25       5.307
     2        73.37    11.04       5.058

  COMPUTED CONFLUENCE ESTIMATES ARE AS FOLLOWS:
  PEAK FLOW RATE(CFS) =      73.37   Tc(MIN.) =   11.04
  TOTAL AREA(ACRES) =       41.5
  LONGEST FLOWPATH FROM NODE    300.00 TO NODE    303.00 =    1885.30 FEET.

****************************************************************************
  FLOW PROCESS FROM NODE    303.00 TO NODE    308.00 IS CODE =  51
----------------------------------------------------------------------------
  >>>>>COMPUTE TRAPEZOIDAL CHANNEL FLOW<<<<<
  >>>>>TRAVELTIME THRU SUBAREA (EXISTING ELEMENT)<<<<<
============================================================================
  ELEVATION DATA: UPSTREAM(FEET) =    854.00  DOWNSTREAM(FEET) =    802.00
  CHANNEL LENGTH THRU SUBAREA(FEET) =   424.70   CHANNEL SLOPE =  0.1224
  CHANNEL BASE(FEET) =    3.00   "Z" FACTOR =   2.000
  MANNING'S FACTOR = 0.030   MAXIMUM DEPTH(FEET) =  10.00
   100 YEAR RAINFALL INTENSITY(INCH/HOUR) =  4.912
  *USER SPECIFIED(GLOBAL):
  NATURAL DESERT LANDSCAPING RUNOFF COEFFICIENT = .3500
  S.C.S. CURVE NUMBER (AMC II) =  85
  TRAVEL TIME COMPUTED USING ESTIMATED FLOW(CFS) =      76.39
  TRAVEL TIME THRU SUBAREA BASED ON VELOCITY(FEET/SEC.) =  13.84
  AVERAGE FLOW DEPTH(FEET) =   1.07   TRAVEL TIME(MIN.) =   0.51
  Tc(MIN.) =   11.55
  SUBAREA AREA(ACRES) =     3.51       SUBAREA RUNOFF(CFS) =    6.03
  AREA-AVERAGE RUNOFF COEFFICIENT =  0.350
  TOTAL AREA(ACRES) =       45.0         PEAK FLOW RATE(CFS) =      77.29

  END OF SUBAREA CHANNEL FLOW HYDRAULICS:
  DEPTH(FEET) =  1.08   FLOW VELOCITY(FEET/SEC.) =  13.86
  LONGEST FLOWPATH FROM NODE    300.00 TO NODE    308.00 =    2310.00 FEET.

****************************************************************************
  FLOW PROCESS FROM NODE    308.00 TO NODE    309.00 IS CODE =  51
----------------------------------------------------------------------------
  >>>>>COMPUTE TRAPEZOIDAL CHANNEL FLOW<<<<<
  >>>>>TRAVELTIME THRU SUBAREA (EXISTING ELEMENT)<<<<<
============================================================================
  ELEVATION DATA: UPSTREAM(FEET) =    802.00  DOWNSTREAM(FEET) =    773.00
  CHANNEL LENGTH THRU SUBAREA(FEET) =   295.40   CHANNEL SLOPE =  0.0982
  CHANNEL BASE(FEET) =    3.00   "Z" FACTOR =   2.000
  MANNING'S FACTOR = 0.030   MAXIMUM DEPTH(FEET) =  10.00
   100 YEAR RAINFALL INTENSITY(INCH/HOUR) =  4.810
  *USER SPECIFIED(GLOBAL):
  NATURAL DESERT LANDSCAPING RUNOFF COEFFICIENT = .3500
  S.C.S. CURVE NUMBER (AMC II) =  85
  TRAVEL TIME COMPUTED USING ESTIMATED FLOW(CFS) =      79.22
  TRAVEL TIME THRU SUBAREA BASED ON VELOCITY(FEET/SEC.) =  12.89
  AVERAGE FLOW DEPTH(FEET) =   1.16   TRAVEL TIME(MIN.) =   0.38
  Tc(MIN.) =   11.94
  SUBAREA AREA(ACRES) =     2.29       SUBAREA RUNOFF(CFS) =    3.86
  AREA-AVERAGE RUNOFF COEFFICIENT =  0.350
  TOTAL AREA(ACRES) =       47.3         PEAK FLOW RATE(CFS) =      79.55

  END OF SUBAREA CHANNEL FLOW HYDRAULICS:
  DEPTH(FEET) =  1.16   FLOW VELOCITY(FEET/SEC.) =  12.85
  LONGEST FLOWPATH FROM NODE    300.00 TO NODE    309.00 =    2605.40 FEET.

****************************************************************************
```

```
  FLOW PROCESS FROM NODE    309.00 TO NODE    310.00 IS CODE =  51
----------------------------------------------------------------------------
  >>>>>COMPUTE TRAPEZOIDAL CHANNEL FLOW<<<<<
  >>>>>TRAVELTIME THRU SUBAREA (EXISTING ELEMENT)<<<<<
============================================================================
  ELEVATION DATA: UPSTREAM(FEET) =    773.00  DOWNSTREAM(FEET) =    748.00
  CHANNEL LENGTH THRU SUBAREA(FEET) =   327.30   CHANNEL SLOPE =  0.0764
  CHANNEL BASE(FEET) =    3.00   "Z" FACTOR =   2.000
  MANNING'S FACTOR = 0.030   MAXIMUM DEPTH(FEET) =  10.00
   100 YEAR RAINFALL INTENSITY(INCH/HOUR) =  4.694
  *USER SPECIFIED(GLOBAL):
  NATURAL DESERT LANDSCAPING RUNOFF COEFFICIENT = .3500
  S.C.S. CURVE NUMBER (AMC II) =  85
  TRAVEL TIME COMPUTED USING ESTIMATED FLOW(CFS) =      81.75
  TRAVEL TIME THRU SUBAREA BASED ON VELOCITY(FEET/SEC.) =  11.83
  AVERAGE FLOW DEPTH(FEET) =   1.25   TRAVEL TIME(MIN.) =   0.46
  Tc(MIN.) =   12.40
  SUBAREA AREA(ACRES) =     2.68       SUBAREA RUNOFF(CFS) =    4.40
  AREA-AVERAGE RUNOFF COEFFICIENT =  0.350
  TOTAL AREA(ACRES) =       49.9         PEAK FLOW RATE(CFS) =      82.03

  END OF SUBAREA CHANNEL FLOW HYDRAULICS:
  DEPTH(FEET) =  1.26   FLOW VELOCITY(FEET/SEC.) =  11.85
  LONGEST FLOWPATH FROM NODE    300.00 TO NODE    310.00 =    2932.70 FEET.

****************************************************************************
  FLOW PROCESS FROM NODE    310.00 TO NODE    311.00 IS CODE =  51
----------------------------------------------------------------------------
  >>>>>COMPUTE TRAPEZOIDAL CHANNEL FLOW<<<<<
  >>>>>TRAVELTIME THRU SUBAREA (EXISTING ELEMENT)<<<<<
============================================================================
  ELEVATION DATA: UPSTREAM(FEET) =    748.00  DOWNSTREAM(FEET) =    738.00
  CHANNEL LENGTH THRU SUBAREA(FEET) =   190.90   CHANNEL SLOPE =  0.0524
  CHANNEL BASE(FEET) =    3.00   "Z" FACTOR =   2.000
  MANNING'S FACTOR = 0.030   MAXIMUM DEPTH(FEET) =  10.00
   100 YEAR RAINFALL INTENSITY(INCH/HOUR) =  4.620
  *USER SPECIFIED(GLOBAL):
  NATURAL DESERT LANDSCAPING RUNOFF COEFFICIENT = .3500
  S.C.S. CURVE NUMBER (AMC II) =  85
  TRAVEL TIME COMPUTED USING ESTIMATED FLOW(CFS) =      82.57
  TRAVEL TIME THRU SUBAREA BASED ON VELOCITY(FEET/SEC.) =  10.32
  AVERAGE FLOW DEPTH(FEET) =   1.39   TRAVEL TIME(MIN.) =   0.31
  Tc(MIN.) =   12.71
  SUBAREA AREA(ACRES) =     0.67       SUBAREA RUNOFF(CFS) =    1.08
  AREA-AVERAGE RUNOFF COEFFICIENT =  0.350
  TOTAL AREA(ACRES) =       50.6         PEAK FLOW RATE(CFS) =      82.03

  END OF SUBAREA CHANNEL FLOW HYDRAULICS:
  DEPTH(FEET) =  1.38   FLOW VELOCITY(FEET/SEC.) =  10.28
  LONGEST FLOWPATH FROM NODE    300.00 TO NODE    311.00 =    3123.60 FEET.

****************************************************************************
  FLOW PROCESS FROM NODE    311.00 TO NODE    311.00 IS CODE =   1
----------------------------------------------------------------------------
  >>>>>DESIGNATE INDEPENDENT STREAM FOR CONFLUENCE<<<<<
============================================================================
  TOTAL NUMBER OF STREAMS =  2
  CONFLUENCE VALUES USED FOR INDEPENDENT STREAM  1 ARE:
  TIME OF CONCENTRATION(MIN.) =   12.71
  RAINFALL INTENSITY(INCH/HR) =   4.62
  TOTAL STREAM AREA(ACRES) =    50.60
  PEAK FLOW RATE(CFS) AT CONFLUENCE =     82.03
```

```
****************************************************************************
  FLOW PROCESS FROM NODE    312.00 TO NODE    313.00 IS CODE =  21
----------------------------------------------------------------------------
  >>>>>RATIONAL METHOD INITIAL SUBAREA ANALYSIS<<<<<
============================================================================
  *USER SPECIFIED(GLOBAL):
  NATURAL DESERT LANDSCAPING RUNOFF COEFFICIENT = .3500
  S.C.S. CURVE NUMBER (AMC II) =  85
  INITIAL SUBAREA FLOW-LENGTH(FEET) =    71.60
  UPSTREAM ELEVATION(FEET) =    978.00
  DOWNSTREAM ELEVATION(FEET) =    965.00
  ELEVATION DIFFERENCE(FEET) =     13.00
  SUBAREA OVERLAND TIME OF FLOW(MIN.) =    5.303
  WARNING: THE MAXIMUM OVERLAND FLOW SLOPE, 10.%, IS USED IN Tc CALCULATION!
   100 YEAR RAINFALL INTENSITY(INCH/HOUR) =  8.118
  SUBAREA RUNOFF(CFS) =      0.31
  TOTAL AREA(ACRES) =      0.11   TOTAL RUNOFF(CFS) =      0.31

****************************************************************************
  FLOW PROCESS FROM NODE    313.00 TO NODE    314.00 IS CODE =  51
----------------------------------------------------------------------------
  >>>>>COMPUTE TRAPEZOIDAL CHANNEL FLOW<<<<<
  >>>>>TRAVELTIME THRU SUBAREA (EXISTING ELEMENT)<<<<<
============================================================================
  ELEVATION DATA: UPSTREAM(FEET) =    965.00  DOWNSTREAM(FEET) =    901.00
  CHANNEL LENGTH THRU SUBAREA(FEET) =   217.70   CHANNEL SLOPE =  0.2940
  CHANNEL BASE(FEET) =    3.00   "Z" FACTOR =   2.000
  MANNING'S FACTOR = 0.030   MAXIMUM DEPTH(FEET) =  10.00
   100 YEAR RAINFALL INTENSITY(INCH/HOUR) =  7.403
  *USER SPECIFIED(GLOBAL):
  NATURAL DESERT LANDSCAPING RUNOFF COEFFICIENT = .3500
  S.C.S. CURVE NUMBER (AMC II) =  85
  TRAVEL TIME COMPUTED USING ESTIMATED FLOW(CFS) =       1.00
  TRAVEL TIME THRU SUBAREA BASED ON VELOCITY(FEET/SEC.) =   4.45
  AVERAGE FLOW DEPTH(FEET) =   0.07   TRAVEL TIME(MIN.) =   0.81
  Tc(MIN.) =    6.12
  SUBAREA AREA(ACRES) =     0.53       SUBAREA RUNOFF(CFS) =    1.37
  AREA-AVERAGE RUNOFF COEFFICIENT =  0.350
  TOTAL AREA(ACRES) =        0.6         PEAK FLOW RATE(CFS) =       1.66

  END OF SUBAREA CHANNEL FLOW HYDRAULICS:
  DEPTH(FEET) =  0.10   FLOW VELOCITY(FEET/SEC.) =   5.39
  LONGEST FLOWPATH FROM NODE    312.00 TO NODE    314.00 =     289.30 FEET.

****************************************************************************
  FLOW PROCESS FROM NODE    314.00 TO NODE    315.00 IS CODE =  51
----------------------------------------------------------------------------
  >>>>>COMPUTE TRAPEZOIDAL CHANNEL FLOW<<<<<
  >>>>>TRAVELTIME THRU SUBAREA (EXISTING ELEMENT)<<<<<
============================================================================
  ELEVATION DATA: UPSTREAM(FEET) =    901.00  DOWNSTREAM(FEET) =    795.00
  CHANNEL LENGTH THRU SUBAREA(FEET) =   358.60   CHANNEL SLOPE =  0.2956
  CHANNEL BASE(FEET) =    3.00   "Z" FACTOR =   2.000
  MANNING'S FACTOR = 0.030   MAXIMUM DEPTH(FEET) =  10.00
   100 YEAR RAINFALL INTENSITY(INCH/HOUR) =  6.875
  *USER SPECIFIED(GLOBAL):
  NATURAL DESERT LANDSCAPING RUNOFF COEFFICIENT = .3500
  S.C.S. CURVE NUMBER (AMC II) =  85
  TRAVEL TIME COMPUTED USING ESTIMATED FLOW(CFS) =       5.10
  TRAVEL TIME THRU SUBAREA BASED ON VELOCITY(FEET/SEC.) =   8.05
  AVERAGE FLOW DEPTH(FEET) =   0.19   TRAVEL TIME(MIN.) =   0.74
  Tc(MIN.) =    6.86
  SUBAREA AREA(ACRES) =     2.86       SUBAREA RUNOFF(CFS) =    6.88
```

```
  AREA-AVERAGE RUNOFF COEFFICIENT =  0.350
  TOTAL AREA(ACRES) =        3.5         PEAK FLOW RATE(CFS) =       8.42

  END OF SUBAREA CHANNEL FLOW HYDRAULICS:
  DEPTH(FEET) =  0.25   FLOW VELOCITY(FEET/SEC.) =   9.67
  LONGEST FLOWPATH FROM NODE    312.00 TO NODE    315.00 =     647.90 FEET.

****************************************************************************
  FLOW PROCESS FROM NODE    315.00 TO NODE    316.00 IS CODE =  51
----------------------------------------------------------------------------
  >>>>>COMPUTE TRAPEZOIDAL CHANNEL FLOW<<<<<
  >>>>>TRAVELTIME THRU SUBAREA (EXISTING ELEMENT)<<<<<
============================================================================
  ELEVATION DATA: UPSTREAM(FEET) =    795.00  DOWNSTREAM(FEET) =    768.00
  CHANNEL LENGTH THRU SUBAREA(FEET) =   253.80   CHANNEL SLOPE =  0.1064
  CHANNEL BASE(FEET) =    3.00   "Z" FACTOR =   2.000
  MANNING'S FACTOR = 0.030   MAXIMUM DEPTH(FEET) =  10.00
   100 YEAR RAINFALL INTENSITY(INCH/HOUR) =  6.532
  *USER SPECIFIED(GLOBAL):
  NATURAL DESERT LANDSCAPING RUNOFF COEFFICIENT = .3500
  S.C.S. CURVE NUMBER (AMC II) =  85
  TRAVEL TIME COMPUTED USING ESTIMATED FLOW(CFS) =      11.06
  TRAVEL TIME THRU SUBAREA BASED ON VELOCITY(FEET/SEC.) =   7.46
  AVERAGE FLOW DEPTH(FEET) =   0.39   TRAVEL TIME(MIN.) =   0.57
  Tc(MIN.) =    7.43
  SUBAREA AREA(ACRES) =     2.31       SUBAREA RUNOFF(CFS) =    5.28
  AREA-AVERAGE RUNOFF COEFFICIENT =  0.350
  TOTAL AREA(ACRES) =        5.8         PEAK FLOW RATE(CFS) =      13.28

  END OF SUBAREA CHANNEL FLOW HYDRAULICS:
  DEPTH(FEET) =  0.44   FLOW VELOCITY(FEET/SEC.) =   7.83
  LONGEST FLOWPATH FROM NODE    312.00 TO NODE    316.00 =     901.70 FEET.

****************************************************************************
  FLOW PROCESS FROM NODE    316.00 TO NODE    311.00 IS CODE =  51
----------------------------------------------------------------------------
  >>>>>COMPUTE TRAPEZOIDAL CHANNEL FLOW<<<<<
  >>>>>TRAVELTIME THRU SUBAREA (EXISTING ELEMENT)<<<<<
============================================================================
  ELEVATION DATA: UPSTREAM(FEET) =    768.00  DOWNSTREAM(FEET) =    738.00
  CHANNEL LENGTH THRU SUBAREA(FEET) =   372.30   CHANNEL SLOPE =  0.0806
  CHANNEL BASE(FEET) =    3.00   "Z" FACTOR =   2.000
  MANNING'S FACTOR = 0.030   MAXIMUM DEPTH(FEET) =  10.00
   100 YEAR RAINFALL INTENSITY(INCH/HOUR) =  6.101
  *USER SPECIFIED(GLOBAL):
  NATURAL DESERT LANDSCAPING RUNOFF COEFFICIENT = .3500
  S.C.S. CURVE NUMBER (AMC II) =  85
  TRAVEL TIME COMPUTED USING ESTIMATED FLOW(CFS) =      15.48
  TRAVEL TIME THRU SUBAREA BASED ON VELOCITY(FEET/SEC.) =   7.48
  AVERAGE FLOW DEPTH(FEET) =   0.51   TRAVEL TIME(MIN.) =   0.83
  Tc(MIN.) =    8.26
  SUBAREA AREA(ACRES) =     2.06       SUBAREA RUNOFF(CFS) =    4.40
  AREA-AVERAGE RUNOFF COEFFICIENT =  0.350
  TOTAL AREA(ACRES) =        7.9         PEAK FLOW RATE(CFS) =      16.80

  END OF SUBAREA CHANNEL FLOW HYDRAULICS:
  DEPTH(FEET) =  0.54   FLOW VELOCITY(FEET/SEC.) =   7.68
  LONGEST FLOWPATH FROM NODE    312.00 TO NODE    311.00 =    1274.00 FEET.

****************************************************************************
  FLOW PROCESS FROM NODE    311.00 TO NODE    311.00 IS CODE =   1
----------------------------------------------------------------------------
  >>>>>DESIGNATE INDEPENDENT STREAM FOR CONFLUENCE<<<<<
```

```
  >>>>>AND COMPUTE VARIOUS CONFLUENCED STREAM VALUES<<<<<
==============================================================================
  TOTAL NUMBER OF STREAMS =  2
  CONFLUENCE VALUES USED FOR INDEPENDENT STREAM  2 ARE:
  TIME OF CONCENTRATION(MIN.) =    8.26
  RAINFALL INTENSITY(INCH/HR) =   6.10
  TOTAL STREAM AREA(ACRES) =     7.87
  PEAK FLOW RATE(CFS) AT CONFLUENCE =     16.80

  ** CONFLUENCE DATA **
  STREAM     RUNOFF       Tc      INTENSITY      AREA
  NUMBER      (CFS)     (MIN.)   (INCH/HOUR)    (ACRE)
      1       82.03    12.71        4.620         50.60
      2       16.80     8.26        6.101          7.87

  RAINFALL INTENSITY AND TIME OF CONCENTRATION RATIO
  CONFLUENCE FORMULA USED FOR  2 STREAMS.

  ** PEAK FLOW RATE TABLE **
  STREAM     RUNOFF      Tc      INTENSITY
  NUMBER      (CFS)    (MIN.)   (INCH/HOUR)
      1       78.93     8.26       6.101
      2       94.75    12.71       4.620

  COMPUTED CONFLUENCE ESTIMATES ARE AS FOLLOWS:
  PEAK FLOW RATE(CFS) =      94.75   Tc(MIN.) =   12.71
  TOTAL AREA(ACRES) =       58.5
  LONGEST FLOWPATH FROM NODE    300.00 TO NODE    311.00 =    3123.60 FEET.

****************************************************************************
  FLOW PROCESS FROM NODE    311.00 TO NODE    317.00 IS CODE =  51
----------------------------------------------------------------------------
  >>>>>COMPUTE TRAPEZOIDAL CHANNEL FLOW<<<<<
  >>>>>TRAVELTIME THRU SUBAREA (EXISTING ELEMENT)<<<<<
==============================================================================
  ELEVATION DATA: UPSTREAM(FEET) =    738.00  DOWNSTREAM(FEET) =    726.00
  CHANNEL LENGTH THRU SUBAREA(FEET) =   226.60   CHANNEL SLOPE =  0.0530
  CHANNEL BASE(FEET) =    3.00   "Z" FACTOR =   2.000
  MANNING'S FACTOR = 0.030   MAXIMUM DEPTH(FEET) =  10.00
   100 YEAR RAINFALL INTENSITY(INCH/HOUR) =  4.540
  *USER SPECIFIED(GLOBAL):
  NATURAL DESERT LANDSCAPING RUNOFF COEFFICIENT = .3500
  S.C.S. CURVE NUMBER (AMC II) =  85
  TRAVEL TIME COMPUTED USING ESTIMATED FLOW(CFS) =      96.04
  TRAVEL TIME THRU SUBAREA BASED ON VELOCITY(FEET/SEC.) =  10.77
  AVERAGE FLOW DEPTH(FEET) =   1.49   TRAVEL TIME(MIN.) =   0.35
  Tc(MIN.) =   13.06
  SUBAREA AREA(ACRES) =     1.62       SUBAREA RUNOFF(CFS) =    2.57
  AREA-AVERAGE RUNOFF COEFFICIENT =  0.350
  TOTAL AREA(ACRES) =       60.1         PEAK FLOW RATE(CFS) =      95.48

  END OF SUBAREA CHANNEL FLOW HYDRAULICS:
  DEPTH(FEET) =  1.48   FLOW VELOCITY(FEET/SEC.) =  10.77
  LONGEST FLOWPATH FROM NODE    300.00 TO NODE    317.00 =    3350.20 FEET.

****************************************************************************
  FLOW PROCESS FROM NODE    317.00 TO NODE    317.00 IS CODE =   1
----------------------------------------------------------------------------
  >>>>>DESIGNATE INDEPENDENT STREAM FOR CONFLUENCE<<<<<
==============================================================================
  TOTAL NUMBER OF STREAMS =  3
  CONFLUENCE VALUES USED FOR INDEPENDENT STREAM  1 ARE:
  TIME OF CONCENTRATION(MIN.) =   13.06
```

```
  RAINFALL INTENSITY(INCH/HR) =   4.54
  TOTAL STREAM AREA(ACRES) =    60.09
  PEAK FLOW RATE(CFS) AT CONFLUENCE =     95.48

****************************************************************************
  FLOW PROCESS FROM NODE    318.00 TO NODE    319.00 IS CODE =  21
----------------------------------------------------------------------------
  >>>>>RATIONAL METHOD INITIAL SUBAREA ANALYSIS<<<<<
============================================================================
  *USER SPECIFIED(GLOBAL):
  NATURAL DESERT LANDSCAPING RUNOFF COEFFICIENT = .3500
  S.C.S. CURVE NUMBER (AMC II) =  85
  INITIAL SUBAREA FLOW-LENGTH(FEET) =   197.40
  UPSTREAM ELEVATION(FEET) =    890.00
  DOWNSTREAM ELEVATION(FEET) =    838.00
  ELEVATION DIFFERENCE(FEET) =     52.00
  SUBAREA OVERLAND TIME OF FLOW(MIN.) =    6.267
  WARNING: INITIAL SUBAREA FLOW PATH LENGTH IS GREATER THAN
           THE MAXIMUM OVERLAND FLOW LENGTH =   100.00
           (Reference: Table 3-1B of Hydrology Manual)
           THE MAXIMUM OVERLAND FLOW LENGTH IS USED IN Tc CALCULATION!
   100 YEAR RAINFALL INTENSITY(INCH/HOUR) =  7.288
  SUBAREA RUNOFF(CFS) =      0.28
  TOTAL AREA(ACRES) =      0.11   TOTAL RUNOFF(CFS) =      0.28

****************************************************************************
  FLOW PROCESS FROM NODE    319.00 TO NODE    317.00 IS CODE =  51
----------------------------------------------------------------------------
  >>>>>COMPUTE TRAPEZOIDAL CHANNEL FLOW<<<<<
  >>>>>TRAVELTIME THRU SUBAREA (EXISTING ELEMENT)<<<<<
============================================================================
  ELEVATION DATA: UPSTREAM(FEET) =    838.00  DOWNSTREAM(FEET) =    726.00
  CHANNEL LENGTH THRU SUBAREA(FEET) =   630.70   CHANNEL SLOPE =  0.1776
  CHANNEL BASE(FEET) =    3.00   "Z" FACTOR =   2.000
  MANNING'S FACTOR = 0.030   MAXIMUM DEPTH(FEET) =  10.00
   100 YEAR RAINFALL INTENSITY(INCH/HOUR) =  6.009
  *USER SPECIFIED(GLOBAL):
  NATURAL DESERT LANDSCAPING RUNOFF COEFFICIENT = .3500
  S.C.S. CURVE NUMBER (AMC II) =  85
  TRAVEL TIME COMPUTED USING ESTIMATED FLOW(CFS) =       1.95
  TRAVEL TIME THRU SUBAREA BASED ON VELOCITY(FEET/SEC.) =   4.81
  AVERAGE FLOW DEPTH(FEET) =   0.12   TRAVEL TIME(MIN.) =   2.19
  Tc(MIN.) =    8.45
  SUBAREA AREA(ACRES) =     1.57       SUBAREA RUNOFF(CFS) =    3.30
  AREA-AVERAGE RUNOFF COEFFICIENT =  0.350
  TOTAL AREA(ACRES) =        1.7         PEAK FLOW RATE(CFS) =       3.53

  END OF SUBAREA CHANNEL FLOW HYDRAULICS:
  DEPTH(FEET) =  0.17   FLOW VELOCITY(FEET/SEC.) =   6.12
  LONGEST FLOWPATH FROM NODE    318.00 TO NODE    317.00 =     828.10 FEET.

****************************************************************************
  FLOW PROCESS FROM NODE    317.00 TO NODE    317.00 IS CODE =   1
----------------------------------------------------------------------------
  >>>>>DESIGNATE INDEPENDENT STREAM FOR CONFLUENCE<<<<<
============================================================================
  TOTAL NUMBER OF STREAMS =  3
  CONFLUENCE VALUES USED FOR INDEPENDENT STREAM  2 ARE:
  TIME OF CONCENTRATION(MIN.) =    8.45
  RAINFALL INTENSITY(INCH/HR) =   6.01
  TOTAL STREAM AREA(ACRES) =     1.68
  PEAK FLOW RATE(CFS) AT CONFLUENCE =      3.53
```

```
****************************************************************************
  FLOW PROCESS FROM NODE    300.00 TO NODE    320.00 IS CODE =  21
----------------------------------------------------------------------------
  >>>>>RATIONAL METHOD INITIAL SUBAREA ANALYSIS<<<<<
============================================================================
  *USER SPECIFIED(GLOBAL):
  NATURAL DESERT LANDSCAPING RUNOFF COEFFICIENT = .3500
  S.C.S. CURVE NUMBER (AMC II) =  85
  INITIAL SUBAREA FLOW-LENGTH(FEET) =    86.50
  UPSTREAM ELEVATION(FEET) =   1205.00
  DOWNSTREAM ELEVATION(FEET) =   1200.00
  ELEVATION DIFFERENCE(FEET) =      5.00
  SUBAREA OVERLAND TIME OF FLOW(MIN.) =    6.997
   100 YEAR RAINFALL INTENSITY(INCH/HOUR) =  6.788
  SUBAREA RUNOFF(CFS) =      0.26
  TOTAL AREA(ACRES) =      0.11   TOTAL RUNOFF(CFS) =      0.26

****************************************************************************
  FLOW PROCESS FROM NODE    320.00 TO NODE    321.00 IS CODE =  51
----------------------------------------------------------------------------
  >>>>>COMPUTE TRAPEZOIDAL CHANNEL FLOW<<<<<
  >>>>>TRAVELTIME THRU SUBAREA (EXISTING ELEMENT)<<<<<
============================================================================
  ELEVATION DATA: UPSTREAM(FEET) =   1200.00  DOWNSTREAM(FEET) =   1100.00
  CHANNEL LENGTH THRU SUBAREA(FEET) =   799.00   CHANNEL SLOPE =  0.1252
  CHANNEL BASE(FEET) =    3.00   "Z" FACTOR =   2.000
  MANNING'S FACTOR = 0.030   MAXIMUM DEPTH(FEET) =  10.00
   100 YEAR RAINFALL INTENSITY(INCH/HOUR) =  5.742
  *USER SPECIFIED(GLOBAL):
  NATURAL DESERT LANDSCAPING RUNOFF COEFFICIENT = .3500
  S.C.S. CURVE NUMBER (AMC II) =  85
  TRAVEL TIME COMPUTED USING ESTIMATED FLOW(CFS) =       5.78
  TRAVEL TIME THRU SUBAREA BASED ON VELOCITY(FEET/SEC.) =   6.42
  AVERAGE FLOW DEPTH(FEET) =   0.26   TRAVEL TIME(MIN.) =   2.07
  Tc(MIN.) =    9.07
  SUBAREA AREA(ACRES) =     5.47       SUBAREA RUNOFF(CFS) =   10.99
  AREA-AVERAGE RUNOFF COEFFICIENT =  0.350
  TOTAL AREA(ACRES) =        5.6         PEAK FLOW RATE(CFS) =      11.21

  END OF SUBAREA CHANNEL FLOW HYDRAULICS:
  DEPTH(FEET) =  0.38   FLOW VELOCITY(FEET/SEC.) =   7.88
  LONGEST FLOWPATH FROM NODE    300.00 TO NODE    321.00 =     885.50 FEET.

****************************************************************************
  FLOW PROCESS FROM NODE    321.00 TO NODE    322.00 IS CODE =  51
----------------------------------------------------------------------------
  >>>>>COMPUTE TRAPEZOIDAL CHANNEL FLOW<<<<<
  >>>>>TRAVELTIME THRU SUBAREA (EXISTING ELEMENT)<<<<<
============================================================================
  ELEVATION DATA: UPSTREAM(FEET) =   1100.00  DOWNSTREAM(FEET) =    895.00
  CHANNEL LENGTH THRU SUBAREA(FEET) =   771.10   CHANNEL SLOPE =  0.2659
  CHANNEL BASE(FEET) =    3.00   "Z" FACTOR =   2.000
  MANNING'S FACTOR = 0.030   MAXIMUM DEPTH(FEET) =  10.00
   100 YEAR RAINFALL INTENSITY(INCH/HOUR) =  5.333
  *USER SPECIFIED(GLOBAL):
  NATURAL DESERT LANDSCAPING RUNOFF COEFFICIENT = .3500
  S.C.S. CURVE NUMBER (AMC II) =  85
  TRAVEL TIME COMPUTED USING ESTIMATED FLOW(CFS) =      17.04
  TRAVEL TIME THRU SUBAREA BASED ON VELOCITY(FEET/SEC.) =  11.69
  AVERAGE FLOW DEPTH(FEET) =   0.39   TRAVEL TIME(MIN.) =   1.10
  Tc(MIN.) =   10.17
  SUBAREA AREA(ACRES) =     6.24       SUBAREA RUNOFF(CFS) =   11.65
  AREA-AVERAGE RUNOFF COEFFICIENT =  0.350
```

```
  TOTAL AREA(ACRES) =       11.8         PEAK FLOW RATE(CFS) =      22.06

  END OF SUBAREA CHANNEL FLOW HYDRAULICS:
  DEPTH(FEET) =  0.45   FLOW VELOCITY(FEET/SEC.) =  12.67
  LONGEST FLOWPATH FROM NODE    300.00 TO NODE    322.00 =    1656.60 FEET.

****************************************************************************
  FLOW PROCESS FROM NODE    322.00 TO NODE    323.00 IS CODE =  51
----------------------------------------------------------------------------
  >>>>>COMPUTE TRAPEZOIDAL CHANNEL FLOW<<<<<
  >>>>>TRAVELTIME THRU SUBAREA (EXISTING ELEMENT)<<<<<
============================================================================
  ELEVATION DATA: UPSTREAM(FEET) =    895.00  DOWNSTREAM(FEET) =    772.00
  CHANNEL LENGTH THRU SUBAREA(FEET) =   849.80   CHANNEL SLOPE =  0.1447
  CHANNEL BASE(FEET) =    3.00   "Z" FACTOR =   2.000
  MANNING'S FACTOR = 0.030   MAXIMUM DEPTH(FEET) =  10.00
   100 YEAR RAINFALL INTENSITY(INCH/HOUR) =  4.931
  *USER SPECIFIED(GLOBAL):
  NATURAL DESERT LANDSCAPING RUNOFF COEFFICIENT = .3500
  S.C.S. CURVE NUMBER (AMC II) =  85
  TRAVEL TIME COMPUTED USING ESTIMATED FLOW(CFS) =      26.17
  TRAVEL TIME THRU SUBAREA BASED ON VELOCITY(FEET/SEC.) =  10.78
  AVERAGE FLOW DEPTH(FEET) =   0.58   TRAVEL TIME(MIN.) =   1.31
  Tc(MIN.) =   11.48
  SUBAREA AREA(ACRES) =     4.76       SUBAREA RUNOFF(CFS) =    8.22
  AREA-AVERAGE RUNOFF COEFFICIENT =  0.350
  TOTAL AREA(ACRES) =       16.6         PEAK FLOW RATE(CFS) =      28.62

  END OF SUBAREA CHANNEL FLOW HYDRAULICS:
  DEPTH(FEET) =  0.61   FLOW VELOCITY(FEET/SEC.) =  11.04
  LONGEST FLOWPATH FROM NODE    300.00 TO NODE    323.00 =    2506.40 FEET.

****************************************************************************
  FLOW PROCESS FROM NODE    323.00 TO NODE    324.00 IS CODE =  51
----------------------------------------------------------------------------
  >>>>>COMPUTE TRAPEZOIDAL CHANNEL FLOW<<<<<
  >>>>>TRAVELTIME THRU SUBAREA (EXISTING ELEMENT)<<<<<
============================================================================
  ELEVATION DATA: UPSTREAM(FEET) =    772.00  DOWNSTREAM(FEET) =    732.00
  CHANNEL LENGTH THRU SUBAREA(FEET) =   424.10   CHANNEL SLOPE =  0.0943
  CHANNEL BASE(FEET) =    3.00   "Z" FACTOR =   2.000
  MANNING'S FACTOR = 0.030   MAXIMUM DEPTH(FEET) =  10.00
   100 YEAR RAINFALL INTENSITY(INCH/HOUR) =  4.739
  *USER SPECIFIED(GLOBAL):
  NATURAL DESERT LANDSCAPING RUNOFF COEFFICIENT = .3500
  S.C.S. CURVE NUMBER (AMC II) =  85
  TRAVEL TIME COMPUTED USING ESTIMATED FLOW(CFS) =      30.11
  TRAVEL TIME THRU SUBAREA BASED ON VELOCITY(FEET/SEC.) =   9.65
  AVERAGE FLOW DEPTH(FEET) =   0.71   TRAVEL TIME(MIN.) =   0.73
  Tc(MIN.) =   12.22
  SUBAREA AREA(ACRES) =     1.80       SUBAREA RUNOFF(CFS) =    2.99
  AREA-AVERAGE RUNOFF COEFFICIENT =  0.350
  TOTAL AREA(ACRES) =       18.4         PEAK FLOW RATE(CFS) =      30.48

  END OF SUBAREA CHANNEL FLOW HYDRAULICS:
  DEPTH(FEET) =  0.71   FLOW VELOCITY(FEET/SEC.) =   9.67
  LONGEST FLOWPATH FROM NODE    300.00 TO NODE    324.00 =    2930.50 FEET.

****************************************************************************
  FLOW PROCESS FROM NODE    324.00 TO NODE    317.00 IS CODE =  51
----------------------------------------------------------------------------
  >>>>>COMPUTE TRAPEZOIDAL CHANNEL FLOW<<<<<
  >>>>>TRAVELTIME THRU SUBAREA (EXISTING ELEMENT)<<<<<
```

```
==============================================================================
  ELEVATION DATA: UPSTREAM(FEET) =    732.00  DOWNSTREAM(FEET) =    726.00
  CHANNEL LENGTH THRU SUBAREA(FEET) =   140.10   CHANNEL SLOPE =  0.0428
  CHANNEL BASE(FEET) =    3.00   "Z" FACTOR =   2.000
  MANNING'S FACTOR = 0.030   MAXIMUM DEPTH(FEET) =  10.00
   100 YEAR RAINFALL INTENSITY(INCH/HOUR) =  4.661
  *USER SPECIFIED(GLOBAL):
  NATURAL DESERT LANDSCAPING RUNOFF COEFFICIENT = .3500
  S.C.S. CURVE NUMBER (AMC II) =  85
  TRAVEL TIME COMPUTED USING ESTIMATED FLOW(CFS) =      30.78
  TRAVEL TIME THRU SUBAREA BASED ON VELOCITY(FEET/SEC.) =   7.32
  AVERAGE FLOW DEPTH(FEET) =   0.88   TRAVEL TIME(MIN.) =   0.32
  Tc(MIN.) =   12.53
  SUBAREA AREA(ACRES) =     0.36       SUBAREA RUNOFF(CFS) =    0.59
  AREA-AVERAGE RUNOFF COEFFICIENT =  0.350
  TOTAL AREA(ACRES) =       18.7         PEAK FLOW RATE(CFS) =      30.57

  END OF SUBAREA CHANNEL FLOW HYDRAULICS:
  DEPTH(FEET) =  0.88   FLOW VELOCITY(FEET/SEC.) =   7.30
  LONGEST FLOWPATH FROM NODE    300.00 TO NODE    317.00 =    3070.60 FEET.

****************************************************************************
  FLOW PROCESS FROM NODE    317.00 TO NODE    317.00 IS CODE =   1
----------------------------------------------------------------------------
  >>>>>DESIGNATE INDEPENDENT STREAM FOR CONFLUENCE<<<<<
  >>>>>AND COMPUTE VARIOUS CONFLUENCED STREAM VALUES<<<<<
==============================================================================
  TOTAL NUMBER OF STREAMS =  3
  CONFLUENCE VALUES USED FOR INDEPENDENT STREAM  3 ARE:
  TIME OF CONCENTRATION(MIN.) =   12.53
  RAINFALL INTENSITY(INCH/HR) =   4.66
  TOTAL STREAM AREA(ACRES) =    18.74
  PEAK FLOW RATE(CFS) AT CONFLUENCE =     30.57

  ** CONFLUENCE DATA **
  STREAM     RUNOFF       Tc      INTENSITY      AREA
  NUMBER      (CFS)     (MIN.)   (INCH/HOUR)    (ACRE)
      1       95.48    13.06        4.540         60.09
      2        3.53     8.45        6.009          1.68
      3       30.57    12.53        4.661         18.74

  RAINFALL INTENSITY AND TIME OF CONCENTRATION RATIO
  CONFLUENCE FORMULA USED FOR  3 STREAMS.

  ** PEAK FLOW RATE TABLE **
  STREAM     RUNOFF      Tc      INTENSITY
  NUMBER      (CFS)    (MIN.)   (INCH/HOUR)
      1       96.28     8.45       6.009
      2      126.31    12.53       4.661
      3      127.92    13.06       4.540

  COMPUTED CONFLUENCE ESTIMATES ARE AS FOLLOWS:
  PEAK FLOW RATE(CFS) =     127.92   Tc(MIN.) =   13.06
  TOTAL AREA(ACRES) =       80.5
  LONGEST FLOWPATH FROM NODE    300.00 TO NODE    317.00 =    3350.20 FEET.

****************************************************************************
  FLOW PROCESS FROM NODE    317.00 TO NODE    325.00 IS CODE =  51
----------------------------------------------------------------------------
  >>>>>COMPUTE TRAPEZOIDAL CHANNEL FLOW<<<<<
  >>>>>TRAVELTIME THRU SUBAREA (EXISTING ELEMENT)<<<<<
==============================================================================
  ELEVATION DATA: UPSTREAM(FEET) =    726.00  DOWNSTREAM(FEET) =    708.00
```

```
  CHANNEL LENGTH THRU SUBAREA(FEET) =   323.30   CHANNEL SLOPE =  0.0557
  CHANNEL BASE(FEET) =    3.00   "Z" FACTOR =   2.000
  MANNING'S FACTOR = 0.030   MAXIMUM DEPTH(FEET) =  10.00
   100 YEAR RAINFALL INTENSITY(INCH/HOUR) =  4.441
  *USER SPECIFIED(GLOBAL):
  NATURAL DESERT LANDSCAPING RUNOFF COEFFICIENT = .3500
  S.C.S. CURVE NUMBER (AMC II) =  85
  TRAVEL TIME COMPUTED USING ESTIMATED FLOW(CFS) =     129.66
  TRAVEL TIME THRU SUBAREA BASED ON VELOCITY(FEET/SEC.) =  11.87
  AVERAGE FLOW DEPTH(FEET) =   1.70   TRAVEL TIME(MIN.) =   0.45
  Tc(MIN.) =   13.51
  SUBAREA AREA(ACRES) =     2.24       SUBAREA RUNOFF(CFS) =    3.48
  AREA-AVERAGE RUNOFF COEFFICIENT =  0.350
  TOTAL AREA(ACRES) =       82.8         PEAK FLOW RATE(CFS) =     128.62

  END OF SUBAREA CHANNEL FLOW HYDRAULICS:
  DEPTH(FEET) =  1.70   FLOW VELOCITY(FEET/SEC.) =  11.86
  LONGEST FLOWPATH FROM NODE    300.00 TO NODE    325.00 =    3673.50 FEET.

****************************************************************************
  FLOW PROCESS FROM NODE    325.00 TO NODE    326.00 IS CODE =  51
----------------------------------------------------------------------------
  >>>>>COMPUTE TRAPEZOIDAL CHANNEL FLOW<<<<<
  >>>>>TRAVELTIME THRU SUBAREA (EXISTING ELEMENT)<<<<<
============================================================================
  ELEVATION DATA: UPSTREAM(FEET) =    708.00  DOWNSTREAM(FEET) =    701.00
  CHANNEL LENGTH THRU SUBAREA(FEET) =   148.20   CHANNEL SLOPE =  0.0472
  CHANNEL BASE(FEET) =    3.00   "Z" FACTOR =   2.000
  MANNING'S FACTOR = 0.030   MAXIMUM DEPTH(FEET) =  10.00
   100 YEAR RAINFALL INTENSITY(INCH/HOUR) =  4.395
  *USER SPECIFIED(GLOBAL):
  NATURAL DESERT LANDSCAPING RUNOFF COEFFICIENT = .3500
  S.C.S. CURVE NUMBER (AMC II) =  85
  TRAVEL TIME COMPUTED USING ESTIMATED FLOW(CFS) =     129.25
  TRAVEL TIME THRU SUBAREA BASED ON VELOCITY(FEET/SEC.) =  11.19
  AVERAGE FLOW DEPTH(FEET) =   1.77   TRAVEL TIME(MIN.) =   0.22
  Tc(MIN.) =   13.73
  SUBAREA AREA(ACRES) =     0.83       SUBAREA RUNOFF(CFS) =    1.28
  AREA-AVERAGE RUNOFF COEFFICIENT =  0.350
  TOTAL AREA(ACRES) =       83.6         PEAK FLOW RATE(CFS) =     128.62

  END OF SUBAREA CHANNEL FLOW HYDRAULICS:
  DEPTH(FEET) =  1.77   FLOW VELOCITY(FEET/SEC.) =  11.16
  LONGEST FLOWPATH FROM NODE    300.00 TO NODE    326.00 =    3821.70 FEET.

****************************************************************************
  FLOW PROCESS FROM NODE    326.00 TO NODE    327.00 IS CODE =  51
----------------------------------------------------------------------------
  >>>>>COMPUTE TRAPEZOIDAL CHANNEL FLOW<<<<<
  >>>>>TRAVELTIME THRU SUBAREA (EXISTING ELEMENT)<<<<<
============================================================================
  ELEVATION DATA: UPSTREAM(FEET) =    701.00  DOWNSTREAM(FEET) =    690.00
  CHANNEL LENGTH THRU SUBAREA(FEET) =   273.10   CHANNEL SLOPE =  0.0403
  CHANNEL BASE(FEET) =    3.00   "Z" FACTOR =   2.000
  MANNING'S FACTOR = 0.030   MAXIMUM DEPTH(FEET) =  10.00
   100 YEAR RAINFALL INTENSITY(INCH/HOUR) =  4.308
  *USER SPECIFIED(GLOBAL):
  NATURAL DESERT LANDSCAPING RUNOFF COEFFICIENT = .3500
  S.C.S. CURVE NUMBER (AMC II) =  85
  TRAVEL TIME COMPUTED USING ESTIMATED FLOW(CFS) =     129.72
  TRAVEL TIME THRU SUBAREA BASED ON VELOCITY(FEET/SEC.) =  10.54
  AVERAGE FLOW DEPTH(FEET) =   1.84   TRAVEL TIME(MIN.) =   0.43
  Tc(MIN.) =   14.16
```

```
  SUBAREA AREA(ACRES) =     1.46       SUBAREA RUNOFF(CFS) =    2.20
  AREA-AVERAGE RUNOFF COEFFICIENT =  0.350
  TOTAL AREA(ACRES) =       85.0         PEAK FLOW RATE(CFS) =     128.62

  END OF SUBAREA CHANNEL FLOW HYDRAULICS:
  DEPTH(FEET) =  1.83   FLOW VELOCITY(FEET/SEC.) =  10.52
  LONGEST FLOWPATH FROM NODE    300.00 TO NODE    327.00 =    4094.80 FEET.

****************************************************************************
  FLOW PROCESS FROM NODE    327.00 TO NODE    328.00 IS CODE =  51
----------------------------------------------------------------------------
  >>>>>COMPUTE TRAPEZOIDAL CHANNEL FLOW<<<<<
  >>>>>TRAVELTIME THRU SUBAREA (EXISTING ELEMENT)<<<<<
============================================================================
  ELEVATION DATA: UPSTREAM(FEET) =    690.00  DOWNSTREAM(FEET) =    689.00
  CHANNEL LENGTH THRU SUBAREA(FEET) =    82.80   CHANNEL SLOPE =  0.0121
  CHANNEL BASE(FEET) =    3.00   "Z" FACTOR =   2.000
  MANNING'S FACTOR = 0.030   MAXIMUM DEPTH(FEET) =  10.00
   100 YEAR RAINFALL INTENSITY(INCH/HOUR) =  4.268
  *USER SPECIFIED(GLOBAL):
  NATURAL DESERT LANDSCAPING RUNOFF COEFFICIENT = .3500
  S.C.S. CURVE NUMBER (AMC II) =  85
  TRAVEL TIME COMPUTED USING ESTIMATED FLOW(CFS) =     129.01
  TRAVEL TIME THRU SUBAREA BASED ON VELOCITY(FEET/SEC.) =   6.75
  AVERAGE FLOW DEPTH(FEET) =   2.43   TRAVEL TIME(MIN.) =   0.20
  Tc(MIN.) =   14.37
  SUBAREA AREA(ACRES) =     0.53       SUBAREA RUNOFF(CFS) =    0.79
  AREA-AVERAGE RUNOFF COEFFICIENT =  0.350
  TOTAL AREA(ACRES) =       85.6         PEAK FLOW RATE(CFS) =     128.62

  END OF SUBAREA CHANNEL FLOW HYDRAULICS:
  DEPTH(FEET) =  2.43   FLOW VELOCITY(FEET/SEC.) =   6.74
  LONGEST FLOWPATH FROM NODE    300.00 TO NODE    328.00 =    4177.60 FEET.

****************************************************************************
  FLOW PROCESS FROM NODE    328.00 TO NODE    329.00 IS CODE =  51
----------------------------------------------------------------------------
  >>>>>COMPUTE TRAPEZOIDAL CHANNEL FLOW<<<<<
  >>>>>TRAVELTIME THRU SUBAREA (EXISTING ELEMENT)<<<<<
============================================================================
  ELEVATION DATA: UPSTREAM(FEET) =    689.00  DOWNSTREAM(FEET) =    684.00
  CHANNEL LENGTH THRU SUBAREA(FEET) =   231.10   CHANNEL SLOPE =  0.0216
  CHANNEL BASE(FEET) =    3.00   "Z" FACTOR =   2.000
  MANNING'S FACTOR = 0.030   MAXIMUM DEPTH(FEET) =  10.00
   100 YEAR RAINFALL INTENSITY(INCH/HOUR) =  4.182
  *USER SPECIFIED(GLOBAL):
  NATURAL DESERT LANDSCAPING RUNOFF COEFFICIENT = .3500
  S.C.S. CURVE NUMBER (AMC II) =  85
  TRAVEL TIME COMPUTED USING ESTIMATED FLOW(CFS) =     128.97
  TRAVEL TIME THRU SUBAREA BASED ON VELOCITY(FEET/SEC.) =   8.38
  AVERAGE FLOW DEPTH(FEET) =   2.12   TRAVEL TIME(MIN.) =   0.46
  Tc(MIN.) =   14.83
  SUBAREA AREA(ACRES) =     0.48       SUBAREA RUNOFF(CFS) =    0.70
  AREA-AVERAGE RUNOFF COEFFICIENT =  0.350
  TOTAL AREA(ACRES) =       86.1         PEAK FLOW RATE(CFS) =     128.62

  END OF SUBAREA CHANNEL FLOW HYDRAULICS:
  DEPTH(FEET) =  2.12   FLOW VELOCITY(FEET/SEC.) =   8.36
  LONGEST FLOWPATH FROM NODE    300.00 TO NODE    329.00 =    4408.70 FEET.

****************************************************************************
  FLOW PROCESS FROM NODE    329.00 TO NODE    329.00 IS CODE =  10
----------------------------------------------------------------------------
```

```
  >>>>>MAIN-STREAM MEMORY COPIED ONTO MEMORY BANK # 1 <<<<<
============================================================================

****************************************************************************
  FLOW PROCESS FROM NODE    300.00 TO NODE    330.00 IS CODE =  21
----------------------------------------------------------------------------
  >>>>>RATIONAL METHOD INITIAL SUBAREA ANALYSIS<<<<<
============================================================================
  *USER SPECIFIED(GLOBAL):
  NATURAL DESERT LANDSCAPING RUNOFF COEFFICIENT = .3500
  S.C.S. CURVE NUMBER (AMC II) =  85
  INITIAL SUBAREA FLOW-LENGTH(FEET) =   112.80
  UPSTREAM ELEVATION(FEET) =   1205.00
  DOWNSTREAM ELEVATION(FEET) =   1200.00
  ELEVATION DIFFERENCE(FEET) =      5.00
  SUBAREA OVERLAND TIME OF FLOW(MIN.) =    8.219
  WARNING: INITIAL SUBAREA FLOW PATH LENGTH IS GREATER THAN
           THE MAXIMUM OVERLAND FLOW LENGTH =   100.00
           (Reference: Table 3-1B of Hydrology Manual)
           THE MAXIMUM OVERLAND FLOW LENGTH IS USED IN Tc CALCULATION!
   100 YEAR RAINFALL INTENSITY(INCH/HOUR) =  6.119
  SUBAREA RUNOFF(CFS) =      0.21
  TOTAL AREA(ACRES) =      0.10   TOTAL RUNOFF(CFS) =      0.21

****************************************************************************
  FLOW PROCESS FROM NODE    330.00 TO NODE    331.00 IS CODE =  51
----------------------------------------------------------------------------
  >>>>>COMPUTE TRAPEZOIDAL CHANNEL FLOW<<<<<
  >>>>>TRAVELTIME THRU SUBAREA (EXISTING ELEMENT)<<<<<
============================================================================
  ELEVATION DATA: UPSTREAM(FEET) =   1200.00  DOWNSTREAM(FEET) =   1075.00
  CHANNEL LENGTH THRU SUBAREA(FEET) =   815.50   CHANNEL SLOPE =  0.1533
  CHANNEL BASE(FEET) =    3.00   "Z" FACTOR =   2.000
  MANNING'S FACTOR = 0.030   MAXIMUM DEPTH(FEET) =  10.00
   100 YEAR RAINFALL INTENSITY(INCH/HOUR) =  5.347
  *USER SPECIFIED(GLOBAL):
  NATURAL DESERT LANDSCAPING RUNOFF COEFFICIENT = .3500
  S.C.S. CURVE NUMBER (AMC II) =  85
  TRAVEL TIME COMPUTED USING ESTIMATED FLOW(CFS) =       6.80
  TRAVEL TIME THRU SUBAREA BASED ON VELOCITY(FEET/SEC.) =   7.11
  AVERAGE FLOW DEPTH(FEET) =   0.27   TRAVEL TIME(MIN.) =   1.91
  Tc(MIN.) =   10.13
  SUBAREA AREA(ACRES) =     6.99       SUBAREA RUNOFF(CFS) =   13.08
  AREA-AVERAGE RUNOFF COEFFICIENT =  0.350
  TOTAL AREA(ACRES) =        7.1         PEAK FLOW RATE(CFS) =      13.27

  END OF SUBAREA CHANNEL FLOW HYDRAULICS:
  DEPTH(FEET) =  0.39   FLOW VELOCITY(FEET/SEC.) =   8.95
  LONGEST FLOWPATH FROM NODE    300.00 TO NODE    331.00 =     928.30 FEET.

****************************************************************************
  FLOW PROCESS FROM NODE    331.00 TO NODE    332.00 IS CODE =  51
----------------------------------------------------------------------------
  >>>>>COMPUTE TRAPEZOIDAL CHANNEL FLOW<<<<<
  >>>>>TRAVELTIME THRU SUBAREA (EXISTING ELEMENT)<<<<<
============================================================================
  ELEVATION DATA: UPSTREAM(FEET) =   1075.00  DOWNSTREAM(FEET) =    935.00
  CHANNEL LENGTH THRU SUBAREA(FEET) =   619.60   CHANNEL SLOPE =  0.2260
  CHANNEL BASE(FEET) =    3.00   "Z" FACTOR =   2.000
  MANNING'S FACTOR = 0.030   MAXIMUM DEPTH(FEET) =  10.00
   100 YEAR RAINFALL INTENSITY(INCH/HOUR) =  5.080
  *USER SPECIFIED(GLOBAL):
  NATURAL DESERT LANDSCAPING RUNOFF COEFFICIENT = .3500
```

```
  S.C.S. CURVE NUMBER (AMC II) =  85
  TRAVEL TIME COMPUTED USING ESTIMATED FLOW(CFS) =      24.62
  TRAVEL TIME THRU SUBAREA BASED ON VELOCITY(FEET/SEC.) =  12.35
  AVERAGE FLOW DEPTH(FEET) =   0.50   TRAVEL TIME(MIN.) =   0.84
  Tc(MIN.) =   10.97
  SUBAREA AREA(ACRES) =    12.76       SUBAREA RUNOFF(CFS) =   22.69
  AREA-AVERAGE RUNOFF COEFFICIENT =  0.350
  TOTAL AREA(ACRES) =       19.9         PEAK FLOW RATE(CFS) =      35.30

  END OF SUBAREA CHANNEL FLOW HYDRAULICS:
  DEPTH(FEET) =  0.61   FLOW VELOCITY(FEET/SEC.) =  13.78
  LONGEST FLOWPATH FROM NODE    300.00 TO NODE    332.00 =    1547.90 FEET.

****************************************************************************
  FLOW PROCESS FROM NODE    332.00 TO NODE    333.00 IS CODE =  51
----------------------------------------------------------------------------
  >>>>>COMPUTE TRAPEZOIDAL CHANNEL FLOW<<<<<
  >>>>>TRAVELTIME THRU SUBAREA (EXISTING ELEMENT)<<<<<
============================================================================
  ELEVATION DATA: UPSTREAM(FEET) =    935.00  DOWNSTREAM(FEET) =    865.00
  CHANNEL LENGTH THRU SUBAREA(FEET) =   485.10   CHANNEL SLOPE =  0.1443
  CHANNEL BASE(FEET) =    3.00   "Z" FACTOR =   2.000
  MANNING'S FACTOR = 0.030   MAXIMUM DEPTH(FEET) =  10.00
   100 YEAR RAINFALL INTENSITY(INCH/HOUR) =  4.889
  *USER SPECIFIED(GLOBAL):
  NATURAL DESERT LANDSCAPING RUNOFF COEFFICIENT = .3500
  S.C.S. CURVE NUMBER (AMC II) =  85
  TRAVEL TIME COMPUTED USING ESTIMATED FLOW(CFS) =      38.08
  TRAVEL TIME THRU SUBAREA BASED ON VELOCITY(FEET/SEC.) =  12.04
  AVERAGE FLOW DEPTH(FEET) =   0.71   TRAVEL TIME(MIN.) =   0.67
  Tc(MIN.) =   11.64
  SUBAREA AREA(ACRES) =     3.25       SUBAREA RUNOFF(CFS) =    5.56
  AREA-AVERAGE RUNOFF COEFFICIENT =  0.350
  TOTAL AREA(ACRES) =       23.1         PEAK FLOW RATE(CFS) =      39.53

  END OF SUBAREA CHANNEL FLOW HYDRAULICS:
  DEPTH(FEET) =  0.73   FLOW VELOCITY(FEET/SEC.) =  12.15
  LONGEST FLOWPATH FROM NODE    300.00 TO NODE    333.00 =    2033.00 FEET.

****************************************************************************
  FLOW PROCESS FROM NODE    333.00 TO NODE    334.00 IS CODE =  51
----------------------------------------------------------------------------
  >>>>>COMPUTE TRAPEZOIDAL CHANNEL FLOW<<<<<
  >>>>>TRAVELTIME THRU SUBAREA (EXISTING ELEMENT)<<<<<
============================================================================
  ELEVATION DATA: UPSTREAM(FEET) =    865.00  DOWNSTREAM(FEET) =    823.00
  CHANNEL LENGTH THRU SUBAREA(FEET) =   269.90   CHANNEL SLOPE =  0.1556
  CHANNEL BASE(FEET) =    3.00   "Z" FACTOR =   2.000
  MANNING'S FACTOR = 0.030   MAXIMUM DEPTH(FEET) =  10.00
   100 YEAR RAINFALL INTENSITY(INCH/HOUR) =  4.795
  *USER SPECIFIED(GLOBAL):
  NATURAL DESERT LANDSCAPING RUNOFF COEFFICIENT = .3500
  S.C.S. CURVE NUMBER (AMC II) =  85
  TRAVEL TIME COMPUTED USING ESTIMATED FLOW(CFS) =      40.86
  TRAVEL TIME THRU SUBAREA BASED ON VELOCITY(FEET/SEC.) =  12.60
  AVERAGE FLOW DEPTH(FEET) =   0.73   TRAVEL TIME(MIN.) =   0.36
  Tc(MIN.) =   11.99
  SUBAREA AREA(ACRES) =     1.58       SUBAREA RUNOFF(CFS) =    2.65
  AREA-AVERAGE RUNOFF COEFFICIENT =  0.350
  TOTAL AREA(ACRES) =       24.7         PEAK FLOW RATE(CFS) =      41.42

  END OF SUBAREA CHANNEL FLOW HYDRAULICS:
  DEPTH(FEET) =  0.74   FLOW VELOCITY(FEET/SEC.) =  12.60
```

```
  LONGEST FLOWPATH FROM NODE    300.00 TO NODE    334.00 =    2302.90 FEET.

****************************************************************************
  FLOW PROCESS FROM NODE    334.00 TO NODE    334.00 IS CODE =   1
----------------------------------------------------------------------------
  >>>>>DESIGNATE INDEPENDENT STREAM FOR CONFLUENCE<<<<<
============================================================================
  TOTAL NUMBER OF STREAMS =  2
  CONFLUENCE VALUES USED FOR INDEPENDENT STREAM  1 ARE:
  TIME OF CONCENTRATION(MIN.) =   11.99
  RAINFALL INTENSITY(INCH/HR) =   4.79
  TOTAL STREAM AREA(ACRES) =    24.68
  PEAK FLOW RATE(CFS) AT CONFLUENCE =     41.42

****************************************************************************
  FLOW PROCESS FROM NODE    335.00 TO NODE    336.00 IS CODE =  21
----------------------------------------------------------------------------
  >>>>>RATIONAL METHOD INITIAL SUBAREA ANALYSIS<<<<<
============================================================================
  *USER SPECIFIED(GLOBAL):
  NATURAL DESERT LANDSCAPING RUNOFF COEFFICIENT = .3500
  S.C.S. CURVE NUMBER (AMC II) =  85
  INITIAL SUBAREA FLOW-LENGTH(FEET) =    89.11
  UPSTREAM ELEVATION(FEET) =    965.00
  DOWNSTREAM ELEVATION(FEET) =    936.00
  ELEVATION DIFFERENCE(FEET) =     29.00
  SUBAREA OVERLAND TIME OF FLOW(MIN.) =    5.916
  WARNING: THE MAXIMUM OVERLAND FLOW SLOPE, 10.%, IS USED IN Tc CALCULATION!
   100 YEAR RAINFALL INTENSITY(INCH/HOUR) =  7.565
  SUBAREA RUNOFF(CFS) =      0.26
  TOTAL AREA(ACRES) =      0.10   TOTAL RUNOFF(CFS) =      0.26

****************************************************************************
  FLOW PROCESS FROM NODE    336.00 TO NODE    337.00 IS CODE =  51
----------------------------------------------------------------------------
  >>>>>COMPUTE TRAPEZOIDAL CHANNEL FLOW<<<<<
  >>>>>TRAVELTIME THRU SUBAREA (EXISTING ELEMENT)<<<<<
============================================================================
  ELEVATION DATA: UPSTREAM(FEET) =    936.00  DOWNSTREAM(FEET) =    861.00
  CHANNEL LENGTH THRU SUBAREA(FEET) =   354.00   CHANNEL SLOPE =  0.2119
  CHANNEL BASE(FEET) =    3.00   "Z" FACTOR =   2.000
  MANNING'S FACTOR = 0.030   MAXIMUM DEPTH(FEET) =  10.00
   100 YEAR RAINFALL INTENSITY(INCH/HOUR) =  6.866
  *USER SPECIFIED(GLOBAL):
  NATURAL DESERT LANDSCAPING RUNOFF COEFFICIENT = .3500
  S.C.S. CURVE NUMBER (AMC II) =  85
  TRAVEL TIME COMPUTED USING ESTIMATED FLOW(CFS) =       3.17
  TRAVEL TIME THRU SUBAREA BASED ON VELOCITY(FEET/SEC.) =   6.15
  AVERAGE FLOW DEPTH(FEET) =   0.16   TRAVEL TIME(MIN.) =   0.96
  Tc(MIN.) =    6.87
  SUBAREA AREA(ACRES) =     2.41       SUBAREA RUNOFF(CFS) =    5.79
  AREA-AVERAGE RUNOFF COEFFICIENT =  0.350
  TOTAL AREA(ACRES) =        2.5         PEAK FLOW RATE(CFS) =       6.03

  END OF SUBAREA CHANNEL FLOW HYDRAULICS:
  DEPTH(FEET) =  0.23   FLOW VELOCITY(FEET/SEC.) =   7.73
  LONGEST FLOWPATH FROM NODE    335.00 TO NODE    337.00 =     443.11 FEET.

****************************************************************************
  FLOW PROCESS FROM NODE    337.00 TO NODE    334.00 IS CODE =  51
----------------------------------------------------------------------------
  >>>>>COMPUTE TRAPEZOIDAL CHANNEL FLOW<<<<<
  >>>>>TRAVELTIME THRU SUBAREA (EXISTING ELEMENT)<<<<<
```

```
==============================================================================
  ELEVATION DATA: UPSTREAM(FEET) =    861.00  DOWNSTREAM(FEET) =    823.00
  CHANNEL LENGTH THRU SUBAREA(FEET) =   269.00   CHANNEL SLOPE =  0.1413
  CHANNEL BASE(FEET) =    3.00   "Z" FACTOR =   2.000
  MANNING'S FACTOR = 0.030   MAXIMUM DEPTH(FEET) =  10.00
   100 YEAR RAINFALL INTENSITY(INCH/HOUR) =  6.501
  *USER SPECIFIED(GLOBAL):
  NATURAL DESERT LANDSCAPING RUNOFF COEFFICIENT = .3500
  S.C.S. CURVE NUMBER (AMC II) =  85
  TRAVEL TIME COMPUTED USING ESTIMATED FLOW(CFS) =       7.99
  TRAVEL TIME THRU SUBAREA BASED ON VELOCITY(FEET/SEC.) =   7.39
  AVERAGE FLOW DEPTH(FEET) =   0.30   TRAVEL TIME(MIN.) =   0.61
  Tc(MIN.) =    7.48
  SUBAREA AREA(ACRES) =     1.72       SUBAREA RUNOFF(CFS) =    3.91
  AREA-AVERAGE RUNOFF COEFFICIENT =  0.350
  TOTAL AREA(ACRES) =        4.2         PEAK FLOW RATE(CFS) =       9.63

  END OF SUBAREA CHANNEL FLOW HYDRAULICS:
  DEPTH(FEET) =  0.33   FLOW VELOCITY(FEET/SEC.) =   7.89
  LONGEST FLOWPATH FROM NODE    335.00 TO NODE    334.00 =     712.11 FEET.

****************************************************************************
  FLOW PROCESS FROM NODE    334.00 TO NODE    334.00 IS CODE =   1
----------------------------------------------------------------------------
  >>>>>DESIGNATE INDEPENDENT STREAM FOR CONFLUENCE<<<<<
  >>>>>AND COMPUTE VARIOUS CONFLUENCED STREAM VALUES<<<<<
==============================================================================
  TOTAL NUMBER OF STREAMS =  2
  CONFLUENCE VALUES USED FOR INDEPENDENT STREAM  2 ARE:
  TIME OF CONCENTRATION(MIN.) =    7.48
  RAINFALL INTENSITY(INCH/HR) =   6.50
  TOTAL STREAM AREA(ACRES) =     4.23
  PEAK FLOW RATE(CFS) AT CONFLUENCE =      9.63

  ** CONFLUENCE DATA **
  STREAM     RUNOFF       Tc      INTENSITY      AREA
  NUMBER      (CFS)     (MIN.)   (INCH/HOUR)    (ACRE)
      1       41.42    11.99        4.795         24.68
      2        9.63     7.48        6.501          4.23

  RAINFALL INTENSITY AND TIME OF CONCENTRATION RATIO
  CONFLUENCE FORMULA USED FOR  2 STREAMS.

  ** PEAK FLOW RATE TABLE **
  STREAM     RUNOFF      Tc      INTENSITY
  NUMBER      (CFS)    (MIN.)   (INCH/HOUR)
      1       35.46     7.48       6.501
      2       48.52    11.99       4.795

  COMPUTED CONFLUENCE ESTIMATES ARE AS FOLLOWS:
  PEAK FLOW RATE(CFS) =      48.52   Tc(MIN.) =   11.99
  TOTAL AREA(ACRES) =       28.9
  LONGEST FLOWPATH FROM NODE    300.00 TO NODE    334.00 =    2302.90 FEET.

****************************************************************************
  FLOW PROCESS FROM NODE    334.00 TO NODE    338.00 IS CODE =  51
----------------------------------------------------------------------------
  >>>>>COMPUTE TRAPEZOIDAL CHANNEL FLOW<<<<<
  >>>>>TRAVELTIME THRU SUBAREA (EXISTING ELEMENT)<<<<<
==============================================================================
  ELEVATION DATA: UPSTREAM(FEET) =    823.00  DOWNSTREAM(FEET) =    766.00
  CHANNEL LENGTH THRU SUBAREA(FEET) =   504.10   CHANNEL SLOPE =  0.1131
  CHANNEL BASE(FEET) =    3.00   "Z" FACTOR =   2.000
```

```
  MANNING'S FACTOR = 0.030   MAXIMUM DEPTH(FEET) =  10.00
   100 YEAR RAINFALL INTENSITY(INCH/HOUR) =  4.624
  *USER SPECIFIED(GLOBAL):
  NATURAL DESERT LANDSCAPING RUNOFF COEFFICIENT = .3500
  S.C.S. CURVE NUMBER (AMC II) =  85
  TRAVEL TIME COMPUTED USING ESTIMATED FLOW(CFS) =      52.77
  TRAVEL TIME THRU SUBAREA BASED ON VELOCITY(FEET/SEC.) =  12.12
  AVERAGE FLOW DEPTH(FEET) =   0.91   TRAVEL TIME(MIN.) =   0.69
  Tc(MIN.) =   12.69
  SUBAREA AREA(ACRES) =     5.25       SUBAREA RUNOFF(CFS) =    8.50
  AREA-AVERAGE RUNOFF COEFFICIENT =  0.350
  TOTAL AREA(ACRES) =       34.2         PEAK FLOW RATE(CFS) =      55.29

  END OF SUBAREA CHANNEL FLOW HYDRAULICS:
  DEPTH(FEET) =  0.93   FLOW VELOCITY(FEET/SEC.) =  12.27
  LONGEST FLOWPATH FROM NODE    300.00 TO NODE    338.00 =    2807.00 FEET.

****************************************************************************
  FLOW PROCESS FROM NODE    338.00 TO NODE    338.00 IS CODE =   1
----------------------------------------------------------------------------
  >>>>>DESIGNATE INDEPENDENT STREAM FOR CONFLUENCE<<<<<
============================================================================
  TOTAL NUMBER OF STREAMS =  2
  CONFLUENCE VALUES USED FOR INDEPENDENT STREAM  1 ARE:
  TIME OF CONCENTRATION(MIN.) =   12.69
  RAINFALL INTENSITY(INCH/HR) =   4.62
  TOTAL STREAM AREA(ACRES) =    34.16
  PEAK FLOW RATE(CFS) AT CONFLUENCE =     55.29

****************************************************************************
  FLOW PROCESS FROM NODE    339.00 TO NODE    340.00 IS CODE =  21
----------------------------------------------------------------------------
  >>>>>RATIONAL METHOD INITIAL SUBAREA ANALYSIS<<<<<
============================================================================
  *USER SPECIFIED(GLOBAL):
  NATURAL DESERT LANDSCAPING RUNOFF COEFFICIENT = .3500
  S.C.S. CURVE NUMBER (AMC II) =  85
  INITIAL SUBAREA FLOW-LENGTH(FEET) =    76.00
  UPSTREAM ELEVATION(FEET) =    896.00
  DOWNSTREAM ELEVATION(FEET) =    883.00
  ELEVATION DIFFERENCE(FEET) =     13.00
  SUBAREA OVERLAND TIME OF FLOW(MIN.) =    5.463
  WARNING: THE MAXIMUM OVERLAND FLOW SLOPE, 10.%, IS USED IN Tc CALCULATION!
   100 YEAR RAINFALL INTENSITY(INCH/HOUR) =  7.963
  SUBAREA RUNOFF(CFS) =      0.28
  TOTAL AREA(ACRES) =      0.10   TOTAL RUNOFF(CFS) =      0.28

****************************************************************************
  FLOW PROCESS FROM NODE    340.00 TO NODE    338.00 IS CODE =  51
----------------------------------------------------------------------------
  >>>>>COMPUTE TRAPEZOIDAL CHANNEL FLOW<<<<<
  >>>>>TRAVELTIME THRU SUBAREA (EXISTING ELEMENT)<<<<<
============================================================================
  ELEVATION DATA: UPSTREAM(FEET) =    883.00  DOWNSTREAM(FEET) =    766.00
  CHANNEL LENGTH THRU SUBAREA(FEET) =   609.30   CHANNEL SLOPE =  0.1920
  CHANNEL BASE(FEET) =    3.00   "Z" FACTOR =   2.000
  MANNING'S FACTOR = 0.030   MAXIMUM DEPTH(FEET) =  10.00
   100 YEAR RAINFALL INTENSITY(INCH/HOUR) =  6.586
  *USER SPECIFIED(GLOBAL):
  NATURAL DESERT LANDSCAPING RUNOFF COEFFICIENT = .3500
  S.C.S. CURVE NUMBER (AMC II) =  85
  TRAVEL TIME COMPUTED USING ESTIMATED FLOW(CFS) =       2.50
  TRAVEL TIME THRU SUBAREA BASED ON VELOCITY(FEET/SEC.) =   5.43
```

```
  AVERAGE FLOW DEPTH(FEET) =   0.14   TRAVEL TIME(MIN.) =   1.87
  Tc(MIN.) =    7.33
  SUBAREA AREA(ACRES) =     1.91       SUBAREA RUNOFF(CFS) =    4.40
  AREA-AVERAGE RUNOFF COEFFICIENT =  0.350
  TOTAL AREA(ACRES) =        2.0         PEAK FLOW RATE(CFS) =       4.63

  END OF SUBAREA CHANNEL FLOW HYDRAULICS:
  DEPTH(FEET) =  0.20   FLOW VELOCITY(FEET/SEC.) =   6.77
  LONGEST FLOWPATH FROM NODE    339.00 TO NODE    338.00 =     685.30 FEET.

****************************************************************************
  FLOW PROCESS FROM NODE    338.00 TO NODE    338.00 IS CODE =   1
----------------------------------------------------------------------------
  >>>>>DESIGNATE INDEPENDENT STREAM FOR CONFLUENCE<<<<<
  >>>>>AND COMPUTE VARIOUS CONFLUENCED STREAM VALUES<<<<<
============================================================================
  TOTAL NUMBER OF STREAMS =  2
  CONFLUENCE VALUES USED FOR INDEPENDENT STREAM  2 ARE:
  TIME OF CONCENTRATION(MIN.) =    7.33
  RAINFALL INTENSITY(INCH/HR) =   6.59
  TOTAL STREAM AREA(ACRES) =     2.01
  PEAK FLOW RATE(CFS) AT CONFLUENCE =      4.63

  ** CONFLUENCE DATA **
  STREAM     RUNOFF       Tc      INTENSITY      AREA
  NUMBER      (CFS)     (MIN.)   (INCH/HOUR)    (ACRE)
      1       55.29    12.69        4.624         34.16
      2        4.63     7.33        6.586          2.01

  RAINFALL INTENSITY AND TIME OF CONCENTRATION RATIO
  CONFLUENCE FORMULA USED FOR  2 STREAMS.

  ** PEAK FLOW RATE TABLE **
  STREAM     RUNOFF      Tc      INTENSITY
  NUMBER      (CFS)    (MIN.)   (INCH/HOUR)
      1       43.45     7.33       6.586
      2       58.54    12.69       4.624

  COMPUTED CONFLUENCE ESTIMATES ARE AS FOLLOWS:
  PEAK FLOW RATE(CFS) =      58.54   Tc(MIN.) =   12.69
  TOTAL AREA(ACRES) =       36.2
  LONGEST FLOWPATH FROM NODE    300.00 TO NODE    338.00 =    2807.00 FEET.

****************************************************************************
  FLOW PROCESS FROM NODE    338.00 TO NODE    341.00 IS CODE =  51
----------------------------------------------------------------------------
  >>>>>COMPUTE TRAPEZOIDAL CHANNEL FLOW<<<<<
  >>>>>TRAVELTIME THRU SUBAREA (EXISTING ELEMENT)<<<<<
============================================================================
  ELEVATION DATA: UPSTREAM(FEET) =    766.00  DOWNSTREAM(FEET) =    729.00
  CHANNEL LENGTH THRU SUBAREA(FEET) =   566.20   CHANNEL SLOPE =  0.0653
  CHANNEL BASE(FEET) =    3.00   "Z" FACTOR =   2.000
  MANNING'S FACTOR = 0.030   MAXIMUM DEPTH(FEET) =  10.00
   100 YEAR RAINFALL INTENSITY(INCH/HOUR) =  4.423
  *USER SPECIFIED(GLOBAL):
  NATURAL DESERT LANDSCAPING RUNOFF COEFFICIENT = .3500
  S.C.S. CURVE NUMBER (AMC II) =  85
  TRAVEL TIME COMPUTED USING ESTIMATED FLOW(CFS) =      62.05
  TRAVEL TIME THRU SUBAREA BASED ON VELOCITY(FEET/SEC.) =  10.39
  AVERAGE FLOW DEPTH(FEET) =   1.13   TRAVEL TIME(MIN.) =   0.91
  Tc(MIN.) =   13.60
  SUBAREA AREA(ACRES) =     4.53       SUBAREA RUNOFF(CFS) =    7.01
  AREA-AVERAGE RUNOFF COEFFICIENT =  0.350
```

```
  TOTAL AREA(ACRES) =       40.7         PEAK FLOW RATE(CFS) =      63.00

  END OF SUBAREA CHANNEL FLOW HYDRAULICS:
  DEPTH(FEET) =  1.14   FLOW VELOCITY(FEET/SEC.) =  10.45
  LONGEST FLOWPATH FROM NODE    300.00 TO NODE    341.00 =    3373.20 FEET.

****************************************************************************
  FLOW PROCESS FROM NODE    341.00 TO NODE    342.00 IS CODE =  51
----------------------------------------------------------------------------
  >>>>>COMPUTE TRAPEZOIDAL CHANNEL FLOW<<<<<
  >>>>>TRAVELTIME THRU SUBAREA (EXISTING ELEMENT)<<<<<
============================================================================
  ELEVATION DATA: UPSTREAM(FEET) =    729.00  DOWNSTREAM(FEET) =    706.00
  CHANNEL LENGTH THRU SUBAREA(FEET) =   385.40   CHANNEL SLOPE =  0.0597
  CHANNEL BASE(FEET) =    3.00   "Z" FACTOR =   2.000
  MANNING'S FACTOR = 0.030   MAXIMUM DEPTH(FEET) =  10.00
   100 YEAR RAINFALL INTENSITY(INCH/HOUR) =  4.296
  *USER SPECIFIED(GLOBAL):
  NATURAL DESERT LANDSCAPING RUNOFF COEFFICIENT = .3500
  S.C.S. CURVE NUMBER (AMC II) =  85
  TRAVEL TIME COMPUTED USING ESTIMATED FLOW(CFS) =      66.71
  TRAVEL TIME THRU SUBAREA BASED ON VELOCITY(FEET/SEC.) =  10.26
  AVERAGE FLOW DEPTH(FEET) =   1.20   TRAVEL TIME(MIN.) =   0.63
  Tc(MIN.) =   14.22
  SUBAREA AREA(ACRES) =     4.93       SUBAREA RUNOFF(CFS) =    7.41
  AREA-AVERAGE RUNOFF COEFFICIENT =  0.350
  TOTAL AREA(ACRES) =       45.6         PEAK FLOW RATE(CFS) =      68.61

  END OF SUBAREA CHANNEL FLOW HYDRAULICS:
  DEPTH(FEET) =  1.22   FLOW VELOCITY(FEET/SEC.) =  10.29
  LONGEST FLOWPATH FROM NODE    300.00 TO NODE    342.00 =    3758.60 FEET.

****************************************************************************
  FLOW PROCESS FROM NODE    342.00 TO NODE    343.00 IS CODE =  51
----------------------------------------------------------------------------
  >>>>>COMPUTE TRAPEZOIDAL CHANNEL FLOW<<<<<
  >>>>>TRAVELTIME THRU SUBAREA (EXISTING ELEMENT)<<<<<
============================================================================
  ELEVATION DATA: UPSTREAM(FEET) =    706.00  DOWNSTREAM(FEET) =    696.00
  CHANNEL LENGTH THRU SUBAREA(FEET) =   331.50   CHANNEL SLOPE =  0.0302
  CHANNEL BASE(FEET) =    3.00   "Z" FACTOR =   2.000
  MANNING'S FACTOR = 0.030   MAXIMUM DEPTH(FEET) =  10.00
   100 YEAR RAINFALL INTENSITY(INCH/HOUR) =  4.168
  *USER SPECIFIED(GLOBAL):
  NATURAL DESERT LANDSCAPING RUNOFF COEFFICIENT = .3500
  S.C.S. CURVE NUMBER (AMC II) =  85
  TRAVEL TIME COMPUTED USING ESTIMATED FLOW(CFS) =      70.08
  TRAVEL TIME THRU SUBAREA BASED ON VELOCITY(FEET/SEC.) =   8.09
  AVERAGE FLOW DEPTH(FEET) =   1.46   TRAVEL TIME(MIN.) =   0.68
  Tc(MIN.) =   14.90
  SUBAREA AREA(ACRES) =     2.01       SUBAREA RUNOFF(CFS) =    2.93
  AREA-AVERAGE RUNOFF COEFFICIENT =  0.350
  TOTAL AREA(ACRES) =       47.6         PEAK FLOW RATE(CFS) =      69.50

  END OF SUBAREA CHANNEL FLOW HYDRAULICS:
  DEPTH(FEET) =  1.46   FLOW VELOCITY(FEET/SEC.) =   8.04
  LONGEST FLOWPATH FROM NODE    300.00 TO NODE    343.00 =    4090.10 FEET.

****************************************************************************
  FLOW PROCESS FROM NODE    343.00 TO NODE    329.00 IS CODE =  51
----------------------------------------------------------------------------
  >>>>>COMPUTE TRAPEZOIDAL CHANNEL FLOW<<<<<
  >>>>>TRAVELTIME THRU SUBAREA (EXISTING ELEMENT)<<<<<
```

```
==============================================================================
  ELEVATION DATA: UPSTREAM(FEET) =    696.00  DOWNSTREAM(FEET) =    684.00
  CHANNEL LENGTH THRU SUBAREA(FEET) =   418.60   CHANNEL SLOPE =  0.0287
  CHANNEL BASE(FEET) =    3.00   "Z" FACTOR =   2.000
  MANNING'S FACTOR = 0.030   MAXIMUM DEPTH(FEET) =  10.00
   100 YEAR RAINFALL INTENSITY(INCH/HOUR) =  4.016
  *USER SPECIFIED(GLOBAL):
  NATURAL DESERT LANDSCAPING RUNOFF COEFFICIENT = .3500
  S.C.S. CURVE NUMBER (AMC II) =  85
  TRAVEL TIME COMPUTED USING ESTIMATED FLOW(CFS) =      70.00
  TRAVEL TIME THRU SUBAREA BASED ON VELOCITY(FEET/SEC.) =   7.91
  AVERAGE FLOW DEPTH(FEET) =   1.48   TRAVEL TIME(MIN.) =   0.88
  Tc(MIN.) =   15.79
  SUBAREA AREA(ACRES) =     0.71       SUBAREA RUNOFF(CFS) =    1.00
  AREA-AVERAGE RUNOFF COEFFICIENT =  0.350
  TOTAL AREA(ACRES) =       48.3         PEAK FLOW RATE(CFS) =      69.50

  END OF SUBAREA CHANNEL FLOW HYDRAULICS:
  DEPTH(FEET) =  1.48   FLOW VELOCITY(FEET/SEC.) =   7.90
  LONGEST FLOWPATH FROM NODE    300.00 TO NODE    329.00 =    4508.70 FEET.

****************************************************************************
  FLOW PROCESS FROM NODE    329.00 TO NODE    329.00 IS CODE =  11
----------------------------------------------------------------------------
  >>>>>CONFLUENCE MEMORY BANK # 1 WITH THE MAIN-STREAM MEMORY<<<<<
==============================================================================

  ** MAIN STREAM CONFLUENCE DATA **
  STREAM     RUNOFF      Tc      INTENSITY     AREA
  NUMBER      (CFS)    (MIN.)   (INCH/HOUR)   (ACRE)
      1       69.50    15.79       4.016       48.35
  LONGEST FLOWPATH FROM NODE    300.00 TO NODE    329.00 =    4508.70 FEET.

  ** MEMORY BANK #  1 CONFLUENCE DATA **
  STREAM     RUNOFF      Tc      INTENSITY     AREA
  NUMBER      (CFS)    (MIN.)   (INCH/HOUR)   (ACRE)
      1      128.62    14.83       4.182       86.05
  LONGEST FLOWPATH FROM NODE    300.00 TO NODE    329.00 =    4408.70 FEET.

  ** PEAK FLOW RATE TABLE **
  STREAM    RUNOFF       Tc      INTENSITY
  NUMBER     (CFS)     (MIN.)   (INCH/HOUR)
      1     193.89      14.83        4.182
      2     193.01      15.79        4.016

  COMPUTED CONFLUENCE ESTIMATES ARE AS FOLLOWS:
  PEAK FLOW RATE(CFS) =     193.89   Tc(MIN.) =   14.83
  TOTAL AREA(ACRES) =      134.4

****************************************************************************
  FLOW PROCESS FROM NODE    329.00 TO NODE    329.00 IS CODE =  12
----------------------------------------------------------------------------
  >>>>>CLEAR MEMORY BANK # 1 <<<<<
==============================================================================

****************************************************************************
  FLOW PROCESS FROM NODE    329.00 TO NODE    344.00 IS CODE =  51
----------------------------------------------------------------------------
  >>>>>COMPUTE TRAPEZOIDAL CHANNEL FLOW<<<<<
  >>>>>TRAVELTIME THRU SUBAREA (EXISTING ELEMENT)<<<<<
==============================================================================
  ELEVATION DATA: UPSTREAM(FEET) =    684.00  DOWNSTREAM(FEET) =    683.00
  CHANNEL LENGTH THRU SUBAREA(FEET) =   279.20   CHANNEL SLOPE =  0.0036
```

```
  CHANNEL BASE(FEET) =    3.00   "Z" FACTOR =   2.000
  MANNING'S FACTOR = 0.030   MAXIMUM DEPTH(FEET) =  10.00
   100 YEAR RAINFALL INTENSITY(INCH/HOUR) =  4.013
  *USER SPECIFIED(GLOBAL):
  NATURAL DESERT LANDSCAPING RUNOFF COEFFICIENT = .3500
  S.C.S. CURVE NUMBER (AMC II) =  85
  TRAVEL TIME COMPUTED USING ESTIMATED FLOW(CFS) =     195.06
  TRAVEL TIME THRU SUBAREA BASED ON VELOCITY(FEET/SEC.) =   4.76
  AVERAGE FLOW DEPTH(FEET) =   3.84   TRAVEL TIME(MIN.) =   0.98
  Tc(MIN.) =   15.80
  SUBAREA AREA(ACRES) =     1.67       SUBAREA RUNOFF(CFS) =    2.35
  AREA-AVERAGE RUNOFF COEFFICIENT =  0.350
  TOTAL AREA(ACRES) =      136.1         PEAK FLOW RATE(CFS) =     193.89

  END OF SUBAREA CHANNEL FLOW HYDRAULICS:
  DEPTH(FEET) =  3.83   FLOW VELOCITY(FEET/SEC.) =   4.76
  LONGEST FLOWPATH FROM NODE    300.00 TO NODE    344.00 =    4787.90 FEET.

****************************************************************************
  FLOW PROCESS FROM NODE    344.00 TO NODE    344.00 IS CODE =  10
----------------------------------------------------------------------------
  >>>>>MAIN-STREAM MEMORY COPIED ONTO MEMORY BANK # 2 <<<<<
============================================================================

****************************************************************************
  FLOW PROCESS FROM NODE    345.00 TO NODE    346.00 IS CODE =  21
----------------------------------------------------------------------------
  >>>>>RATIONAL METHOD INITIAL SUBAREA ANALYSIS<<<<<
============================================================================
  *USER SPECIFIED(GLOBAL):
  NATURAL DESERT LANDSCAPING RUNOFF COEFFICIENT = .3500
  S.C.S. CURVE NUMBER (AMC II) =  85
  INITIAL SUBAREA FLOW-LENGTH(FEET) =    95.30
  UPSTREAM ELEVATION(FEET) =    878.00
  DOWNSTREAM ELEVATION(FEET) =    871.00
  ELEVATION DIFFERENCE(FEET) =      7.00
  SUBAREA OVERLAND TIME OF FLOW(MIN.) =    6.780
   100 YEAR RAINFALL INTENSITY(INCH/HOUR) =  6.927
  SUBAREA RUNOFF(CFS) =      0.24
  TOTAL AREA(ACRES) =      0.10   TOTAL RUNOFF(CFS) =      0.24

****************************************************************************
  FLOW PROCESS FROM NODE    346.00 TO NODE    347.00 IS CODE =  51
----------------------------------------------------------------------------
  >>>>>COMPUTE TRAPEZOIDAL CHANNEL FLOW<<<<<
  >>>>>TRAVELTIME THRU SUBAREA (EXISTING ELEMENT)<<<<<
============================================================================
  ELEVATION DATA: UPSTREAM(FEET) =    871.00  DOWNSTREAM(FEET) =    846.00
  CHANNEL LENGTH THRU SUBAREA(FEET) =   182.10   CHANNEL SLOPE =  0.1373
  CHANNEL BASE(FEET) =    3.00   "Z" FACTOR =   2.000
  MANNING'S FACTOR = 0.030   MAXIMUM DEPTH(FEET) =  10.00
   100 YEAR RAINFALL INTENSITY(INCH/HOUR) =  6.306
  *USER SPECIFIED(GLOBAL):
  NATURAL DESERT LANDSCAPING RUNOFF COEFFICIENT = .3500
  S.C.S. CURVE NUMBER (AMC II) =  85
  TRAVEL TIME COMPUTED USING ESTIMATED FLOW(CFS) =       0.64
  TRAVEL TIME THRU SUBAREA BASED ON VELOCITY(FEET/SEC.) =   2.85
  AVERAGE FLOW DEPTH(FEET) =   0.07   TRAVEL TIME(MIN.) =   1.06
  Tc(MIN.) =    7.84
  SUBAREA AREA(ACRES) =     0.36       SUBAREA RUNOFF(CFS) =    0.79
  AREA-AVERAGE RUNOFF COEFFICIENT =  0.350
  TOTAL AREA(ACRES) =        0.5         PEAK FLOW RATE(CFS) =       1.02
```

```
  END OF SUBAREA CHANNEL FLOW HYDRAULICS:
  DEPTH(FEET) =  0.09   FLOW VELOCITY(FEET/SEC.) =   3.60
  LONGEST FLOWPATH FROM NODE    345.00 TO NODE    347.00 =     277.40 FEET.

****************************************************************************
  FLOW PROCESS FROM NODE    347.00 TO NODE    348.00 IS CODE =  51
----------------------------------------------------------------------------
  >>>>>COMPUTE TRAPEZOIDAL CHANNEL FLOW<<<<<
  >>>>>TRAVELTIME THRU SUBAREA (EXISTING ELEMENT)<<<<<
============================================================================
  ELEVATION DATA: UPSTREAM(FEET) =    846.00  DOWNSTREAM(FEET) =    768.00
  CHANNEL LENGTH THRU SUBAREA(FEET) =   377.10   CHANNEL SLOPE =  0.2068
  CHANNEL BASE(FEET) =    3.00   "Z" FACTOR =   2.000
  MANNING'S FACTOR = 0.030   MAXIMUM DEPTH(FEET) =  10.00
   100 YEAR RAINFALL INTENSITY(INCH/HOUR) =  5.789
  *USER SPECIFIED(GLOBAL):
  NATURAL DESERT LANDSCAPING RUNOFF COEFFICIENT = .3500
  S.C.S. CURVE NUMBER (AMC II) =  85
  TRAVEL TIME COMPUTED USING ESTIMATED FLOW(CFS) =       2.60
  TRAVEL TIME THRU SUBAREA BASED ON VELOCITY(FEET/SEC.) =   5.65
  AVERAGE FLOW DEPTH(FEET) =   0.14   TRAVEL TIME(MIN.) =   1.11
  Tc(MIN.) =    8.95
  SUBAREA AREA(ACRES) =     1.56       SUBAREA RUNOFF(CFS) =    3.16
  AREA-AVERAGE RUNOFF COEFFICIENT =  0.350
  TOTAL AREA(ACRES) =        2.0         PEAK FLOW RATE(CFS) =       4.09

  END OF SUBAREA CHANNEL FLOW HYDRAULICS:
  DEPTH(FEET) =  0.18   FLOW VELOCITY(FEET/SEC.) =   6.76
  LONGEST FLOWPATH FROM NODE    345.00 TO NODE    348.00 =     654.50 FEET.

****************************************************************************
  FLOW PROCESS FROM NODE    348.00 TO NODE    349.00 IS CODE =  51
----------------------------------------------------------------------------
  >>>>>COMPUTE TRAPEZOIDAL CHANNEL FLOW<<<<<
  >>>>>TRAVELTIME THRU SUBAREA (EXISTING ELEMENT)<<<<<
============================================================================
  ELEVATION DATA: UPSTREAM(FEET) =    768.00  DOWNSTREAM(FEET) =    752.00
  CHANNEL LENGTH THRU SUBAREA(FEET) =   132.70   CHANNEL SLOPE =  0.1206
  CHANNEL BASE(FEET) =    3.00   "Z" FACTOR =   2.000
  MANNING'S FACTOR = 0.030   MAXIMUM DEPTH(FEET) =  10.00
   100 YEAR RAINFALL INTENSITY(INCH/HOUR) =  5.640
  *USER SPECIFIED(GLOBAL):
  NATURAL DESERT LANDSCAPING RUNOFF COEFFICIENT = .3500
  S.C.S. CURVE NUMBER (AMC II) =  85
  TRAVEL TIME COMPUTED USING ESTIMATED FLOW(CFS) =       5.01
  TRAVEL TIME THRU SUBAREA BASED ON VELOCITY(FEET/SEC.) =   5.96
  AVERAGE FLOW DEPTH(FEET) =   0.24   TRAVEL TIME(MIN.) =   0.37
  Tc(MIN.) =    9.33
  SUBAREA AREA(ACRES) =     0.93       SUBAREA RUNOFF(CFS) =    1.84
  AREA-AVERAGE RUNOFF COEFFICIENT =  0.350
  TOTAL AREA(ACRES) =        3.0         PEAK FLOW RATE(CFS) =       5.82

  END OF SUBAREA CHANNEL FLOW HYDRAULICS:
  DEPTH(FEET) =  0.26   FLOW VELOCITY(FEET/SEC.) =   6.30
  LONGEST FLOWPATH FROM NODE    345.00 TO NODE    349.00 =     787.20 FEET.

****************************************************************************
  FLOW PROCESS FROM NODE    349.00 TO NODE    350.00 IS CODE =  51
----------------------------------------------------------------------------
  >>>>>COMPUTE TRAPEZOIDAL CHANNEL FLOW<<<<<
  >>>>>TRAVELTIME THRU SUBAREA (EXISTING ELEMENT)<<<<<
============================================================================
  ELEVATION DATA: UPSTREAM(FEET) =    752.00  DOWNSTREAM(FEET) =    739.00
```

```
  CHANNEL LENGTH THRU SUBAREA(FEET) =   192.30   CHANNEL SLOPE =  0.0676
  CHANNEL BASE(FEET) =    3.00   "Z" FACTOR =   2.000
  MANNING'S FACTOR = 0.030   MAXIMUM DEPTH(FEET) =  10.00
   100 YEAR RAINFALL INTENSITY(INCH/HOUR) =  5.419
  *USER SPECIFIED(GLOBAL):
  NATURAL DESERT LANDSCAPING RUNOFF COEFFICIENT = .3500
  S.C.S. CURVE NUMBER (AMC II) =  85
  TRAVEL TIME COMPUTED USING ESTIMATED FLOW(CFS) =       6.51
  TRAVEL TIME THRU SUBAREA BASED ON VELOCITY(FEET/SEC.) =   5.37
  AVERAGE FLOW DEPTH(FEET) =   0.33   TRAVEL TIME(MIN.) =   0.60
  Tc(MIN.) =    9.92
  SUBAREA AREA(ACRES) =     0.72       SUBAREA RUNOFF(CFS) =    1.37
  AREA-AVERAGE RUNOFF COEFFICIENT =  0.350
  TOTAL AREA(ACRES) =        3.7         PEAK FLOW RATE(CFS) =       6.96

  END OF SUBAREA CHANNEL FLOW HYDRAULICS:
  DEPTH(FEET) =  0.34   FLOW VELOCITY(FEET/SEC.) =   5.55
  LONGEST FLOWPATH FROM NODE    345.00 TO NODE    350.00 =     979.50 FEET.

****************************************************************************
  FLOW PROCESS FROM NODE    350.00 TO NODE    351.00 IS CODE =  51
----------------------------------------------------------------------------
  >>>>>COMPUTE TRAPEZOIDAL CHANNEL FLOW<<<<<
  >>>>>TRAVELTIME THRU SUBAREA (EXISTING ELEMENT)<<<<<
============================================================================
  ELEVATION DATA: UPSTREAM(FEET) =    739.00  DOWNSTREAM(FEET) =    705.00
  CHANNEL LENGTH THRU SUBAREA(FEET) =   470.90   CHANNEL SLOPE =  0.0722
  CHANNEL BASE(FEET) =    3.00   "Z" FACTOR =   2.000
  MANNING'S FACTOR = 0.030   MAXIMUM DEPTH(FEET) =  10.00
   100 YEAR RAINFALL INTENSITY(INCH/HOUR) =  4.986
  *USER SPECIFIED(GLOBAL):
  NATURAL DESERT LANDSCAPING RUNOFF COEFFICIENT = .3500
  S.C.S. CURVE NUMBER (AMC II) =  85
  TRAVEL TIME COMPUTED USING ESTIMATED FLOW(CFS) =       7.54
  TRAVEL TIME THRU SUBAREA BASED ON VELOCITY(FEET/SEC.) =   5.75
  AVERAGE FLOW DEPTH(FEET) =   0.35   TRAVEL TIME(MIN.) =   1.37
  Tc(MIN.) =   11.29
  SUBAREA AREA(ACRES) =     0.66       SUBAREA RUNOFF(CFS) =    1.15
  AREA-AVERAGE RUNOFF COEFFICIENT =  0.350
  TOTAL AREA(ACRES) =        4.3         PEAK FLOW RATE(CFS) =       7.56

  END OF SUBAREA CHANNEL FLOW HYDRAULICS:
  DEPTH(FEET) =  0.35   FLOW VELOCITY(FEET/SEC.) =   5.76
  LONGEST FLOWPATH FROM NODE    345.00 TO NODE    351.00 =    1450.40 FEET.

****************************************************************************
  FLOW PROCESS FROM NODE    351.00 TO NODE    351.00 IS CODE =   1
----------------------------------------------------------------------------
  >>>>>DESIGNATE INDEPENDENT STREAM FOR CONFLUENCE<<<<<
============================================================================
  TOTAL NUMBER OF STREAMS =  2
  CONFLUENCE VALUES USED FOR INDEPENDENT STREAM  1 ARE:
  TIME OF CONCENTRATION(MIN.) =   11.29
  RAINFALL INTENSITY(INCH/HR) =   4.99
  TOTAL STREAM AREA(ACRES) =     4.33
  PEAK FLOW RATE(CFS) AT CONFLUENCE =      7.56

****************************************************************************
  FLOW PROCESS FROM NODE    352.00 TO NODE    353.00 IS CODE =  21
----------------------------------------------------------------------------
  >>>>>RATIONAL METHOD INITIAL SUBAREA ANALYSIS<<<<<
============================================================================
  *USER SPECIFIED(GLOBAL):
```

```
  NATURAL DESERT LANDSCAPING RUNOFF COEFFICIENT = .3500
  S.C.S. CURVE NUMBER (AMC II) =  85
  INITIAL SUBAREA FLOW-LENGTH(FEET) =   132.50
  UPSTREAM ELEVATION(FEET) =    845.00
  DOWNSTREAM ELEVATION(FEET) =    823.00
  ELEVATION DIFFERENCE(FEET) =     22.00
  SUBAREA OVERLAND TIME OF FLOW(MIN.) =    6.267
  WARNING: INITIAL SUBAREA FLOW PATH LENGTH IS GREATER THAN
           THE MAXIMUM OVERLAND FLOW LENGTH =   100.00
           (Reference: Table 3-1B of Hydrology Manual)
           THE MAXIMUM OVERLAND FLOW LENGTH IS USED IN Tc CALCULATION!
   100 YEAR RAINFALL INTENSITY(INCH/HOUR) =  7.288
  SUBAREA RUNOFF(CFS) =      0.26
  TOTAL AREA(ACRES) =      0.10   TOTAL RUNOFF(CFS) =      0.26

****************************************************************************
  FLOW PROCESS FROM NODE    353.00 TO NODE    354.00 IS CODE =  51
----------------------------------------------------------------------------
  >>>>>COMPUTE TRAPEZOIDAL CHANNEL FLOW<<<<<
  >>>>>TRAVELTIME THRU SUBAREA (EXISTING ELEMENT)<<<<<
============================================================================
  ELEVATION DATA: UPSTREAM(FEET) =    823.00  DOWNSTREAM(FEET) =    765.00
  CHANNEL LENGTH THRU SUBAREA(FEET) =   355.00   CHANNEL SLOPE =  0.1634
  CHANNEL BASE(FEET) =    3.00   "Z" FACTOR =   2.000
  MANNING'S FACTOR = 0.030   MAXIMUM DEPTH(FEET) =  10.00
   100 YEAR RAINFALL INTENSITY(INCH/HOUR) =  6.348
  *USER SPECIFIED(GLOBAL):
  NATURAL DESERT LANDSCAPING RUNOFF COEFFICIENT = .3500
  S.C.S. CURVE NUMBER (AMC II) =  85
  TRAVEL TIME COMPUTED USING ESTIMATED FLOW(CFS) =       1.22
  TRAVEL TIME THRU SUBAREA BASED ON VELOCITY(FEET/SEC.) =   3.95
  AVERAGE FLOW DEPTH(FEET) =   0.10   TRAVEL TIME(MIN.) =   1.50
  Tc(MIN.) =    7.76
  SUBAREA AREA(ACRES) =     0.86       SUBAREA RUNOFF(CFS) =    1.91
  AREA-AVERAGE RUNOFF COEFFICIENT =  0.350
  TOTAL AREA(ACRES) =        1.0         PEAK FLOW RATE(CFS) =       2.13

  END OF SUBAREA CHANNEL FLOW HYDRAULICS:
  DEPTH(FEET) =  0.13   FLOW VELOCITY(FEET/SEC.) =   4.93
  LONGEST FLOWPATH FROM NODE    352.00 TO NODE    354.00 =     487.50 FEET.

****************************************************************************
  FLOW PROCESS FROM NODE    354.00 TO NODE    355.00 IS CODE =  51
----------------------------------------------------------------------------
  >>>>>COMPUTE TRAPEZOIDAL CHANNEL FLOW<<<<<
  >>>>>TRAVELTIME THRU SUBAREA (EXISTING ELEMENT)<<<<<
============================================================================
  ELEVATION DATA: UPSTREAM(FEET) =    765.00  DOWNSTREAM(FEET) =    727.00
  CHANNEL LENGTH THRU SUBAREA(FEET) =   394.90   CHANNEL SLOPE =  0.0962
  CHANNEL BASE(FEET) =    3.00   "Z" FACTOR =   2.000
  MANNING'S FACTOR = 0.030   MAXIMUM DEPTH(FEET) =  10.00
   100 YEAR RAINFALL INTENSITY(INCH/HOUR) =  5.809
  *USER SPECIFIED(GLOBAL):
  NATURAL DESERT LANDSCAPING RUNOFF COEFFICIENT = .3500
  S.C.S. CURVE NUMBER (AMC II) =  85
  TRAVEL TIME COMPUTED USING ESTIMATED FLOW(CFS) =       5.49
  TRAVEL TIME THRU SUBAREA BASED ON VELOCITY(FEET/SEC.) =   5.75
  AVERAGE FLOW DEPTH(FEET) =   0.27   TRAVEL TIME(MIN.) =   1.14
  Tc(MIN.) =    8.91
  SUBAREA AREA(ACRES) =     3.30       SUBAREA RUNOFF(CFS) =    6.71
  AREA-AVERAGE RUNOFF COEFFICIENT =  0.350
  TOTAL AREA(ACRES) =        4.3         PEAK FLOW RATE(CFS) =       8.66
```

```
  END OF SUBAREA CHANNEL FLOW HYDRAULICS:
  DEPTH(FEET) =  0.35   FLOW VELOCITY(FEET/SEC.) =   6.60
  LONGEST FLOWPATH FROM NODE    352.00 TO NODE    355.00 =     882.40 FEET.

****************************************************************************
  FLOW PROCESS FROM NODE    355.00 TO NODE    351.00 IS CODE =  51
----------------------------------------------------------------------------
  >>>>>COMPUTE TRAPEZOIDAL CHANNEL FLOW<<<<<
  >>>>>TRAVELTIME THRU SUBAREA (EXISTING ELEMENT)<<<<<
============================================================================
  ELEVATION DATA: UPSTREAM(FEET) =    727.00  DOWNSTREAM(FEET) =    705.00
  CHANNEL LENGTH THRU SUBAREA(FEET) =   461.20   CHANNEL SLOPE =  0.0477
  CHANNEL BASE(FEET) =    3.00   "Z" FACTOR =   2.000
  MANNING'S FACTOR = 0.030   MAXIMUM DEPTH(FEET) =  10.00
   100 YEAR RAINFALL INTENSITY(INCH/HOUR) =  5.322
  *USER SPECIFIED(GLOBAL):
  NATURAL DESERT LANDSCAPING RUNOFF COEFFICIENT = .3500
  S.C.S. CURVE NUMBER (AMC II) =  85
  TRAVEL TIME COMPUTED USING ESTIMATED FLOW(CFS) =      12.97
  TRAVEL TIME THRU SUBAREA BASED ON VELOCITY(FEET/SEC.) =   5.93
  AVERAGE FLOW DEPTH(FEET) =   0.54   TRAVEL TIME(MIN.) =   1.30
  Tc(MIN.) =   10.20
  SUBAREA AREA(ACRES) =     4.62       SUBAREA RUNOFF(CFS) =    8.61
  AREA-AVERAGE RUNOFF COEFFICIENT =  0.350
  TOTAL AREA(ACRES) =        8.9         PEAK FLOW RATE(CFS) =      16.54

  END OF SUBAREA CHANNEL FLOW HYDRAULICS:
  DEPTH(FEET) =  0.61   FLOW VELOCITY(FEET/SEC.) =   6.38
  LONGEST FLOWPATH FROM NODE    352.00 TO NODE    351.00 =    1343.60 FEET.

****************************************************************************
  FLOW PROCESS FROM NODE    351.00 TO NODE    351.00 IS CODE =   1
----------------------------------------------------------------------------
  >>>>>DESIGNATE INDEPENDENT STREAM FOR CONFLUENCE<<<<<
  >>>>>AND COMPUTE VARIOUS CONFLUENCED STREAM VALUES<<<<<
============================================================================
  TOTAL NUMBER OF STREAMS =  2
  CONFLUENCE VALUES USED FOR INDEPENDENT STREAM  2 ARE:
  TIME OF CONCENTRATION(MIN.) =   10.20
  RAINFALL INTENSITY(INCH/HR) =   5.32
  TOTAL STREAM AREA(ACRES) =     8.88
  PEAK FLOW RATE(CFS) AT CONFLUENCE =     16.54

  ** CONFLUENCE DATA **
  STREAM     RUNOFF       Tc      INTENSITY      AREA
  NUMBER      (CFS)     (MIN.)   (INCH/HOUR)    (ACRE)
      1        7.56    11.29        4.986          4.33
      2       16.54    10.20        5.322          8.88

  RAINFALL INTENSITY AND TIME OF CONCENTRATION RATIO
  CONFLUENCE FORMULA USED FOR  2 STREAMS.

  ** PEAK FLOW RATE TABLE **
  STREAM     RUNOFF      Tc      INTENSITY
  NUMBER      (CFS)    (MIN.)   (INCH/HOUR)
      1       23.37    10.20       5.322
      2       23.05    11.29       4.986

  COMPUTED CONFLUENCE ESTIMATES ARE AS FOLLOWS:
  PEAK FLOW RATE(CFS) =      23.37   Tc(MIN.) =   10.20
  TOTAL AREA(ACRES) =       13.2
  LONGEST FLOWPATH FROM NODE    345.00 TO NODE    351.00 =    1450.40 FEET.
```

```
****************************************************************************
  FLOW PROCESS FROM NODE    351.00 TO NODE    344.00 IS CODE =  51
----------------------------------------------------------------------------
  >>>>>COMPUTE TRAPEZOIDAL CHANNEL FLOW<<<<<
  >>>>>TRAVELTIME THRU SUBAREA (EXISTING ELEMENT)<<<<<
============================================================================
  ELEVATION DATA: UPSTREAM(FEET) =    705.00  DOWNSTREAM(FEET) =    684.00
  CHANNEL LENGTH THRU SUBAREA(FEET) =   586.30   CHANNEL SLOPE =  0.0358
  CHANNEL BASE(FEET) =    3.00   "Z" FACTOR =   2.000
  MANNING'S FACTOR = 0.030   MAXIMUM DEPTH(FEET) =  10.00
   100 YEAR RAINFALL INTENSITY(INCH/HOUR) =  4.899
  *USER SPECIFIED(GLOBAL):
  NATURAL DESERT LANDSCAPING RUNOFF COEFFICIENT = .3500
  S.C.S. CURVE NUMBER (AMC II) =  85
  TRAVEL TIME COMPUTED USING ESTIMATED FLOW(CFS) =      33.01
  TRAVEL TIME THRU SUBAREA BASED ON VELOCITY(FEET/SEC.) =   7.00
  AVERAGE FLOW DEPTH(FEET) =   0.96   TRAVEL TIME(MIN.) =   1.40
  Tc(MIN.) =   11.60
  SUBAREA AREA(ACRES) =    11.24       SUBAREA RUNOFF(CFS) =   19.27
  AREA-AVERAGE RUNOFF COEFFICIENT =  0.350
  TOTAL AREA(ACRES) =       24.5         PEAK FLOW RATE(CFS) =      41.93

  END OF SUBAREA CHANNEL FLOW HYDRAULICS:
  DEPTH(FEET) =  1.09   FLOW VELOCITY(FEET/SEC.) =   7.46
  LONGEST FLOWPATH FROM NODE    345.00 TO NODE    344.00 =    2036.70 FEET.

****************************************************************************
  FLOW PROCESS FROM NODE    344.00 TO NODE    344.00 IS CODE =  11
----------------------------------------------------------------------------
  >>>>>CONFLUENCE MEMORY BANK # 2 WITH THE MAIN-STREAM MEMORY<<<<<
============================================================================

  ** MAIN STREAM CONFLUENCE DATA **
  STREAM     RUNOFF      Tc      INTENSITY     AREA
  NUMBER      (CFS)    (MIN.)   (INCH/HOUR)   (ACRE)
      1       41.93    11.60       4.899       24.45
  LONGEST FLOWPATH FROM NODE    345.00 TO NODE    344.00 =    2036.70 FEET.

  ** MEMORY BANK #  2 CONFLUENCE DATA **
  STREAM     RUNOFF      Tc      INTENSITY     AREA
  NUMBER      (CFS)    (MIN.)   (INCH/HOUR)   (ACRE)
      1      193.89    15.80       4.013      136.07
  LONGEST FLOWPATH FROM NODE    300.00 TO NODE    344.00 =    4787.90 FEET.

  ** PEAK FLOW RATE TABLE **
  STREAM    RUNOFF       Tc      INTENSITY
  NUMBER     (CFS)     (MIN.)   (INCH/HOUR)
      1     184.23      11.60        4.899
      2     228.23      15.80        4.013

  COMPUTED CONFLUENCE ESTIMATES ARE AS FOLLOWS:
  PEAK FLOW RATE(CFS) =     228.23   Tc(MIN.) =   15.80
  TOTAL AREA(ACRES) =      160.5

****************************************************************************
  FLOW PROCESS FROM NODE    344.00 TO NODE    344.00 IS CODE =  12
----------------------------------------------------------------------------
  >>>>>CLEAR MEMORY BANK # 2 <<<<<
============================================================================

****************************************************************************
  FLOW PROCESS FROM NODE    344.00 TO NODE    356.00 IS CODE =  51
----------------------------------------------------------------------------
```

```
  >>>>>COMPUTE TRAPEZOIDAL CHANNEL FLOW<<<<<
  >>>>>TRAVELTIME THRU SUBAREA (EXISTING ELEMENT)<<<<<
================================================================================
  ELEVATION DATA: UPSTREAM(FEET) =    684.00  DOWNSTREAM(FEET) =    670.00
  CHANNEL LENGTH THRU SUBAREA(FEET) =   615.60   CHANNEL SLOPE =  0.0227
  CHANNEL BASE(FEET) =    3.00   "Z" FACTOR =   2.000
  MANNING'S FACTOR = 0.030   MAXIMUM DEPTH(FEET) =  10.00
   100 YEAR RAINFALL INTENSITY(INCH/HOUR) =  3.853
  *USER SPECIFIED(GLOBAL):
  NATURAL DESERT LANDSCAPING RUNOFF COEFFICIENT = .3500
  S.C.S. CURVE NUMBER (AMC II) =  85
  TRAVEL TIME COMPUTED USING ESTIMATED FLOW(CFS) =     232.13
  TRAVEL TIME THRU SUBAREA BASED ON VELOCITY(FEET/SEC.) =   9.92
  AVERAGE FLOW DEPTH(FEET) =   2.75   TRAVEL TIME(MIN.) =   1.03
  Tc(MIN.) =   16.84
  SUBAREA AREA(ACRES) =     5.78       SUBAREA RUNOFF(CFS) =    7.79
  AREA-AVERAGE RUNOFF COEFFICIENT =  0.350
  TOTAL AREA(ACRES) =      166.3         PEAK FLOW RATE(CFS) =     228.23

  END OF SUBAREA CHANNEL FLOW HYDRAULICS:
  DEPTH(FEET) =  2.73   FLOW VELOCITY(FEET/SEC.) =   9.86
  LONGEST FLOWPATH FROM NODE    300.00 TO NODE    356.00 =    5403.50 FEET.

****************************************************************************
  FLOW PROCESS FROM NODE    356.00 TO NODE    356.00 IS CODE =   1
----------------------------------------------------------------------------
  >>>>>DESIGNATE INDEPENDENT STREAM FOR CONFLUENCE<<<<<
================================================================================
  TOTAL NUMBER OF STREAMS =  3
  CONFLUENCE VALUES USED FOR INDEPENDENT STREAM  1 ARE:
  TIME OF CONCENTRATION(MIN.) =   16.84
  RAINFALL INTENSITY(INCH/HR) =   3.85
  TOTAL STREAM AREA(ACRES) =   166.30
  PEAK FLOW RATE(CFS) AT CONFLUENCE =    228.23

****************************************************************************
  FLOW PROCESS FROM NODE    357.00 TO NODE    358.00 IS CODE =  21
----------------------------------------------------------------------------
  >>>>>RATIONAL METHOD INITIAL SUBAREA ANALYSIS<<<<<
================================================================================
  *USER SPECIFIED(GLOBAL):
  NATURAL DESERT LANDSCAPING RUNOFF COEFFICIENT = .3500
  S.C.S. CURVE NUMBER (AMC II) =  85
  INITIAL SUBAREA FLOW-LENGTH(FEET) =    91.59
  UPSTREAM ELEVATION(FEET) =    698.00
  DOWNSTREAM ELEVATION(FEET) =    693.00
  ELEVATION DIFFERENCE(FEET) =      5.00
  SUBAREA OVERLAND TIME OF FLOW(MIN.) =    7.338
   100 YEAR RAINFALL INTENSITY(INCH/HOUR) =  6.583
  SUBAREA RUNOFF(CFS) =      0.25
  TOTAL AREA(ACRES) =      0.11   TOTAL RUNOFF(CFS) =      0.25

****************************************************************************
  FLOW PROCESS FROM NODE    358.00 TO NODE    356.00 IS CODE =  51
----------------------------------------------------------------------------
  >>>>>COMPUTE TRAPEZOIDAL CHANNEL FLOW<<<<<
  >>>>>TRAVELTIME THRU SUBAREA (EXISTING ELEMENT)<<<<<
================================================================================
  ELEVATION DATA: UPSTREAM(FEET) =    693.00  DOWNSTREAM(FEET) =    670.00
  CHANNEL LENGTH THRU SUBAREA(FEET) =  1098.30   CHANNEL SLOPE =  0.0209
  CHANNEL BASE(FEET) =    3.00   "Z" FACTOR =   2.000
  MANNING'S FACTOR = 0.030   MAXIMUM DEPTH(FEET) =  10.00
   100 YEAR RAINFALL INTENSITY(INCH/HOUR) =  4.491
```

```
  *USER SPECIFIED(GLOBAL):
  NATURAL DESERT LANDSCAPING RUNOFF COEFFICIENT = .3500
  S.C.S. CURVE NUMBER (AMC II) =  85
  TRAVEL TIME COMPUTED USING ESTIMATED FLOW(CFS) =       3.96
  TRAVEL TIME THRU SUBAREA BASED ON VELOCITY(FEET/SEC.) =   3.08
  AVERAGE FLOW DEPTH(FEET) =   0.35   TRAVEL TIME(MIN.) =   5.94
  Tc(MIN.) =   13.28
  SUBAREA AREA(ACRES) =     4.59       SUBAREA RUNOFF(CFS) =    7.21
  AREA-AVERAGE RUNOFF COEFFICIENT =  0.350
  TOTAL AREA(ACRES) =        4.7         PEAK FLOW RATE(CFS) =       7.39

  END OF SUBAREA CHANNEL FLOW HYDRAULICS:
  DEPTH(FEET) =  0.49   FLOW VELOCITY(FEET/SEC.) =   3.76
  LONGEST FLOWPATH FROM NODE    357.00 TO NODE    356.00 =    1189.89 FEET.

****************************************************************************
  FLOW PROCESS FROM NODE    356.00 TO NODE    356.00 IS CODE =   1
----------------------------------------------------------------------------
  >>>>>DESIGNATE INDEPENDENT STREAM FOR CONFLUENCE<<<<<
============================================================================
  TOTAL NUMBER OF STREAMS =  3
  CONFLUENCE VALUES USED FOR INDEPENDENT STREAM  2 ARE:
  TIME OF CONCENTRATION(MIN.) =   13.28
  RAINFALL INTENSITY(INCH/HR) =   4.49
  TOTAL STREAM AREA(ACRES) =     4.70
  PEAK FLOW RATE(CFS) AT CONFLUENCE =      7.39

****************************************************************************
  FLOW PROCESS FROM NODE    359.00 TO NODE    360.00 IS CODE =  21
----------------------------------------------------------------------------
  >>>>>RATIONAL METHOD INITIAL SUBAREA ANALYSIS<<<<<
============================================================================
  *USER SPECIFIED(GLOBAL):
  NATURAL DESERT LANDSCAPING RUNOFF COEFFICIENT = .3500
  S.C.S. CURVE NUMBER (AMC II) =  85
  INITIAL SUBAREA FLOW-LENGTH(FEET) =   108.30
  UPSTREAM ELEVATION(FEET) =    739.00
  DOWNSTREAM ELEVATION(FEET) =    733.00
  ELEVATION DIFFERENCE(FEET) =      6.00
  SUBAREA OVERLAND TIME OF FLOW(MIN.) =    7.630
  WARNING: INITIAL SUBAREA FLOW PATH LENGTH IS GREATER THAN
           THE MAXIMUM OVERLAND FLOW LENGTH =   100.00
           (Reference: Table 3-1B of Hydrology Manual)
           THE MAXIMUM OVERLAND FLOW LENGTH IS USED IN Tc CALCULATION!
   100 YEAR RAINFALL INTENSITY(INCH/HOUR) =  6.419
  SUBAREA RUNOFF(CFS) =      0.22
  TOTAL AREA(ACRES) =      0.10   TOTAL RUNOFF(CFS) =      0.22

****************************************************************************
  FLOW PROCESS FROM NODE    360.00 TO NODE    356.00 IS CODE =  51
----------------------------------------------------------------------------
  >>>>>COMPUTE TRAPEZOIDAL CHANNEL FLOW<<<<<
  >>>>>TRAVELTIME THRU SUBAREA (EXISTING ELEMENT)<<<<<
============================================================================
  ELEVATION DATA: UPSTREAM(FEET) =    733.00  DOWNSTREAM(FEET) =    670.00
  CHANNEL LENGTH THRU SUBAREA(FEET) =   677.40   CHANNEL SLOPE =  0.0930
  CHANNEL BASE(FEET) =    3.00   "Z" FACTOR =   2.000
  MANNING'S FACTOR = 0.030   MAXIMUM DEPTH(FEET) =  10.00
   100 YEAR RAINFALL INTENSITY(INCH/HOUR) =  5.306
  *USER SPECIFIED(GLOBAL):
  NATURAL DESERT LANDSCAPING RUNOFF COEFFICIENT = .3500
  S.C.S. CURVE NUMBER (AMC II) =  85
  TRAVEL TIME COMPUTED USING ESTIMATED FLOW(CFS) =       2.46
```

```
  TRAVEL TIME THRU SUBAREA BASED ON VELOCITY(FEET/SEC.) =   4.31
  AVERAGE FLOW DEPTH(FEET) =   0.17   TRAVEL TIME(MIN.) =   2.62
  Tc(MIN.) =   10.25
  SUBAREA AREA(ACRES) =     2.38       SUBAREA RUNOFF(CFS) =    4.42
  AREA-AVERAGE RUNOFF COEFFICIENT =  0.350
  TOTAL AREA(ACRES) =        2.5         PEAK FLOW RATE(CFS) =       4.61

  END OF SUBAREA CHANNEL FLOW HYDRAULICS:
  DEPTH(FEET) =  0.25   FLOW VELOCITY(FEET/SEC.) =   5.34
  LONGEST FLOWPATH FROM NODE    359.00 TO NODE    356.00 =     785.70 FEET.

****************************************************************************
  FLOW PROCESS FROM NODE    356.00 TO NODE    356.00 IS CODE =   1
----------------------------------------------------------------------------
  >>>>>DESIGNATE INDEPENDENT STREAM FOR CONFLUENCE<<<<<
  >>>>>AND COMPUTE VARIOUS CONFLUENCED STREAM VALUES<<<<<
============================================================================
  TOTAL NUMBER OF STREAMS =  3
  CONFLUENCE VALUES USED FOR INDEPENDENT STREAM  3 ARE:
  TIME OF CONCENTRATION(MIN.) =   10.25
  RAINFALL INTENSITY(INCH/HR) =   5.31
  TOTAL STREAM AREA(ACRES) =     2.48
  PEAK FLOW RATE(CFS) AT CONFLUENCE =      4.61

  ** CONFLUENCE DATA **
  STREAM     RUNOFF       Tc      INTENSITY      AREA
  NUMBER      (CFS)     (MIN.)   (INCH/HOUR)    (ACRE)
      1      228.23    16.84        3.853        166.30
      2        7.39    13.28        4.491          4.70
      3        4.61    10.25        5.306          2.48

  RAINFALL INTENSITY AND TIME OF CONCENTRATION RATIO
  CONFLUENCE FORMULA USED FOR  3 STREAMS.

  ** PEAK FLOW RATE TABLE **
  STREAM     RUNOFF      Tc      INTENSITY
  NUMBER      (CFS)    (MIN.)   (INCH/HOUR)
      1      149.26    10.25       5.306
      2      191.25    13.28       4.491
      3      237.91    16.84       3.853

  COMPUTED CONFLUENCE ESTIMATES ARE AS FOLLOWS:
  PEAK FLOW RATE(CFS) =     237.91   Tc(MIN.) =   16.84
  TOTAL AREA(ACRES) =      173.5
  LONGEST FLOWPATH FROM NODE    300.00 TO NODE    356.00 =    5403.50 FEET.
============================================================================
  END OF STUDY SUMMARY:
  TOTAL AREA(ACRES)     =      173.5  TC(MIN.) =     16.84
  PEAK FLOW RATE(CFS)   =     237.91
============================================================================
============================================================================
  END OF RATIONAL METHOD ANALYSIS
```

BASIN D

FUSCOE ENGINEERING
6390 Greenwich Drive, Suite 170
San Diego, California 92122
tel 858.554.1500 • fax 858.597.0335
www.fuscoe.com

Job Name: Eden Hills
Existing Hydrology
100 year Design Storm
Job #: 2690-007-02

Date: Aug 2013
EDEN400.DAT
Run Name: 400 Series

Page: 1

Node to Node		Code	Elev 1 (feet)	Elev 2 (feet)	Length (feet)	C or Fric Co.	Area (ac.)	Comments
400	401	2	1070.0	1027.0	133.00	0.35	0.10	
401	402	5	1027.0	895.0	517.30	0.35	1.35	
402	403	5	895.0	787.0	307.40	0.350	2.60	
403	404	5	787.0	766.0	109.50	0.35	1.43	
404	405	5	766.0	756.0	72.10	0.35	1.83	
405	406	5	756.0	746.0	85.70	0.35	3.49	
406	407	5	746.0	726.0	145.50	0.350	0.94	
407	408	5	726.0	707.0	321.80	0.35	2.50	
408	409	5	707.0	686.0	527.90	0.35	1.63	
409	409	10	-	-	-	-	-	Save to Bank 1
410	411	2	794.0	776.0	134.20	0.35	0.10	
411	422	5	776.0	694.0	680.30	0.35	5.11	
422	422	1	-	-	-	-	-	1 of 2
423	424	2	978.0	964.0	101.60	0.35	0.11	
424	425	5	964.0	727.0	827.20	0.35	7.43	
425	422	5	727.0	693.0	749.70	0.35	2.42	
422	422	1	-	-	-	-	-	2 of 2
422	409	5	693.0	686.0	414.08	0.35	0.74	
409	409	11	-	-	-	-	-	Confluence with Bank 1
409	409	12	-	-	-	-	-	Clear Bank 1
409	412	5	686.0	684.0	261.50	0.35	3.72	
412	412	1	-	-	-	-	-	1 of 4
413	414	2	914.0	863.0	125.00	0.35	0.10	
414	415	5	863.0	785.0	265.70	0.350	0.70	
415	416	5	785.0	769.0	104.60	0.35	1.31	
416	417	5	769.0	728.0	369.40	0.35	1.82	
417	412	5	728.0	684.0	684.40	0.350	0.73	
412	412	1	-	-	-	-	-	2 of 4
418	419	2	805.0	787.0	106.40	0.35	0.11	
419	412	5	787.0	684.0	955.10	0.35	5.03	
412	412	1	-	-	-	-	-	3 of 4
420	421	2	761.0	738.0	101.40	0.35	0.10	
421	412	5	738.0	684.0	705.40	0.35	3.75	
412	412	1	-	-	-	-	-	4 of 4

```
****************************************************************************

            RATIONAL METHOD HYDROLOGY COMPUTER PROGRAM PACKAGE
            Reference: SAN DIEGO COUNTY FLOOD CONTROL DISTRICT
                         2003,1985,1981 HYDROLOGY MANUAL
         (c) Copyright 1982-2012 Advanced Engineering Software (aes)
             Ver. 19.0 Release Date: 06/01/2012  License ID 1355

                           Analysis prepared by:

                             Fuscoe Engineering
                             6390 Greenwich Dr.
                                 Suite 170
                            San Diego, CA 92122

 ************************** DESCRIPTION OF STUDY **************************
* VALIANO                                                                  *
* EXISTING HYDROLOGY STUDY - 400 SERIES                                    *
* OCTOBER 20, 2014                                                         *
 ***************************************************************************

  FILE NAME: EDEN400.DAT
  TIME/DATE OF STUDY: 10:19 10/20/2014
----------------------------------------------------------------------------
  USER SPECIFIED HYDROLOGY AND HYDRAULIC MODEL INFORMATION:
----------------------------------------------------------------------------
  2003 SAN DIEGO MANUAL CRITERIA

  USER SPECIFIED STORM EVENT(YEAR) = 100.00
  6-HOUR DURATION PRECIPITATION (INCHES) =   3.200
  SPECIFIED MINIMUM PIPE SIZE(INCH) =  12.00
  SPECIFIED PERCENT OF GRADIENTS(DECIMAL) TO USE FOR FRICTION SLOPE = 0.90
  SPECIFIED CONSTANT RUNOFF COEFFICIENT = 0.350
  NOTE: USE MODIFIED RATIONAL METHOD PROCEDURES FOR CONFLUENCE ANALYSIS
  *USER-DEFINED STREET-SECTIONS FOR COUPLED PIPEFLOW AND STREETFLOW MODEL*
     HALF-  CROWN TO   STREET-CROSSFALL:   CURB  GUTTER-GEOMETRIES:  MANNING
     WIDTH  CROSSFALL  IN-  / OUT-/PARK-  HEIGHT  WIDTH  LIP   HIKE  FACTOR
NO.   (FT)     (FT)    SIDE / SIDE/ WAY    (FT)    (FT)  (FT)  (FT)    (n)
===  =====  =========  =================  ======  ===== ====== ===== =======
  1   30.0     20.0    0.018/0.018/0.020   0.67    2.00 0.0312 0.167 0.0150

  GLOBAL STREET FLOW-DEPTH CONSTRAINTS:
    1. Relative Flow-Depth =  0.00 FEET
       as (Maximum Allowable Street Flow Depth) - (Top-of-Curb)
    2. (Depth)*(Velocity) Constraint =  6.0 (FT*FT/S)
  *SIZE PIPE WITH A FLOW CAPACITY GREATER THAN
   OR EQUAL TO THE UPSTREAM TRIBUTARY PIPE.*

****************************************************************************
  FLOW PROCESS FROM NODE    400.00 TO NODE    401.00 IS CODE =  21
----------------------------------------------------------------------------
  >>>>>RATIONAL METHOD INITIAL SUBAREA ANALYSIS<<<<<
============================================================================
  *USER SPECIFIED(GLOBAL):
  NATURAL DESERT LANDSCAPING RUNOFF COEFFICIENT = .3500
  S.C.S. CURVE NUMBER (AMC II) =  85
  INITIAL SUBAREA FLOW-LENGTH(FEET) =   100.00
  UPSTREAM ELEVATION(FEET) =   1070.00
  DOWNSTREAM ELEVATION(FEET) =   1027.00
  ELEVATION DIFFERENCE(FEET) =     43.00
  SUBAREA OVERLAND TIME OF FLOW(MIN.) =    6.267
  WARNING: THE MAXIMUM OVERLAND FLOW SLOPE, 10.%, IS USED IN Tc CALCULATION!
```

```
 100 YEAR RAINFALL INTENSITY(INCH/HOUR) =  7.288
SUBAREA RUNOFF(CFS) =      0.26
TOTAL AREA(ACRES) =      0.10   TOTAL RUNOFF(CFS) =      0.26

****************************************************************************
  FLOW PROCESS FROM NODE    401.00 TO NODE    402.00 IS CODE =  51
----------------------------------------------------------------------------
  >>>>>COMPUTE TRAPEZOIDAL CHANNEL FLOW<<<<<
  >>>>>TRAVELTIME THRU SUBAREA (EXISTING ELEMENT)<<<<<
============================================================================
  ELEVATION DATA: UPSTREAM(FEET) =   1027.00  DOWNSTREAM(FEET) =    895.00
  CHANNEL LENGTH THRU SUBAREA(FEET) =   517.30   CHANNEL SLOPE =  0.2552
  CHANNEL BASE(FEET) =    3.00   "Z" FACTOR =   2.000
  MANNING'S FACTOR = 0.030   MAXIMUM DEPTH(FEET) =  10.00
   100 YEAR RAINFALL INTENSITY(INCH/HOUR) =  6.270
  *USER SPECIFIED(GLOBAL):
  NATURAL DESERT LANDSCAPING RUNOFF COEFFICIENT = .3500
  S.C.S. CURVE NUMBER (AMC II) =  85
  TRAVEL TIME COMPUTED USING ESTIMATED FLOW(CFS) =       1.75
  TRAVEL TIME THRU SUBAREA BASED ON VELOCITY(FEET/SEC.) =   5.24
  AVERAGE FLOW DEPTH(FEET) =   0.10   TRAVEL TIME(MIN.) =   1.65
  Tc(MIN.) =    7.91
  SUBAREA AREA(ACRES) =     1.35       SUBAREA RUNOFF(CFS) =    2.96
  AREA-AVERAGE RUNOFF COEFFICIENT =  0.350
  TOTAL AREA(ACRES) =        1.5         PEAK FLOW RATE(CFS) =       3.18

  END OF SUBAREA CHANNEL FLOW HYDRAULICS:
  DEPTH(FEET) =  0.15   FLOW VELOCITY(FEET/SEC.) =   6.53
  LONGEST FLOWPATH FROM NODE    400.00 TO NODE    402.00 =     617.30 FEET.

****************************************************************************
  FLOW PROCESS FROM NODE    402.00 TO NODE    403.00 IS CODE =  51
----------------------------------------------------------------------------
  >>>>>COMPUTE TRAPEZOIDAL CHANNEL FLOW<<<<<
  >>>>>TRAVELTIME THRU SUBAREA (EXISTING ELEMENT)<<<<<
============================================================================
  ELEVATION DATA: UPSTREAM(FEET) =    895.00  DOWNSTREAM(FEET) =    787.00
  CHANNEL LENGTH THRU SUBAREA(FEET) =   307.40   CHANNEL SLOPE =  0.3513
  CHANNEL BASE(FEET) =    3.00   "Z" FACTOR =   2.000
  MANNING'S FACTOR = 0.030   MAXIMUM DEPTH(FEET) =  10.00
   100 YEAR RAINFALL INTENSITY(INCH/HOUR) =  5.996
  *USER SPECIFIED(GLOBAL):
  NATURAL DESERT LANDSCAPING RUNOFF COEFFICIENT = .3500
  S.C.S. CURVE NUMBER (AMC II) =  85
  TRAVEL TIME COMPUTED USING ESTIMATED FLOW(CFS) =       5.91
  TRAVEL TIME THRU SUBAREA BASED ON VELOCITY(FEET/SEC.) =   9.01
  AVERAGE FLOW DEPTH(FEET) =   0.19   TRAVEL TIME(MIN.) =   0.57
  Tc(MIN.) =    8.48
  SUBAREA AREA(ACRES) =     2.60       SUBAREA RUNOFF(CFS) =    5.46
  AREA-AVERAGE RUNOFF COEFFICIENT =  0.350
  TOTAL AREA(ACRES) =        4.1         PEAK FLOW RATE(CFS) =       8.50

  END OF SUBAREA CHANNEL FLOW HYDRAULICS:
  DEPTH(FEET) =  0.24   FLOW VELOCITY(FEET/SEC.) =  10.21
  LONGEST FLOWPATH FROM NODE    400.00 TO NODE    403.00 =     924.70 FEET.

****************************************************************************
  FLOW PROCESS FROM NODE    403.00 TO NODE    404.00 IS CODE =  51
----------------------------------------------------------------------------
  >>>>>COMPUTE TRAPEZOIDAL CHANNEL FLOW<<<<<
  >>>>>TRAVELTIME THRU SUBAREA (EXISTING ELEMENT)<<<<<
============================================================================
  ELEVATION DATA: UPSTREAM(FEET) =    787.00  DOWNSTREAM(FEET) =    766.00
```

```
  CHANNEL LENGTH THRU SUBAREA(FEET) =   109.50   CHANNEL SLOPE =  0.1918
  CHANNEL BASE(FEET) =    3.00   "Z" FACTOR =   2.000
  MANNING'S FACTOR = 0.030   MAXIMUM DEPTH(FEET) =  10.00
   100 YEAR RAINFALL INTENSITY(INCH/HOUR) =  5.902
  *USER SPECIFIED(GLOBAL):
  NATURAL DESERT LANDSCAPING RUNOFF COEFFICIENT = .3500
  S.C.S. CURVE NUMBER (AMC II) =  85
  TRAVEL TIME COMPUTED USING ESTIMATED FLOW(CFS) =       9.98
  TRAVEL TIME THRU SUBAREA BASED ON VELOCITY(FEET/SEC.) =   8.70
  AVERAGE FLOW DEPTH(FEET) =   0.32   TRAVEL TIME(MIN.) =   0.21
  Tc(MIN.) =    8.69
  SUBAREA AREA(ACRES) =     1.43       SUBAREA RUNOFF(CFS) =    2.95
  AREA-AVERAGE RUNOFF COEFFICIENT =  0.350
  TOTAL AREA(ACRES) =        5.5         PEAK FLOW RATE(CFS) =      11.32

  END OF SUBAREA CHANNEL FLOW HYDRAULICS:
  DEPTH(FEET) =  0.34   FLOW VELOCITY(FEET/SEC.) =   9.09
  LONGEST FLOWPATH FROM NODE    400.00 TO NODE    404.00 =    1034.20 FEET.

****************************************************************************
  FLOW PROCESS FROM NODE    404.00 TO NODE    405.00 IS CODE =  51
----------------------------------------------------------------------------
  >>>>>COMPUTE TRAPEZOIDAL CHANNEL FLOW<<<<<
  >>>>>TRAVELTIME THRU SUBAREA (EXISTING ELEMENT)<<<<<
============================================================================
  ELEVATION DATA: UPSTREAM(FEET) =    766.00  DOWNSTREAM(FEET) =    756.00
  CHANNEL LENGTH THRU SUBAREA(FEET) =    72.10   CHANNEL SLOPE =  0.1387
  CHANNEL BASE(FEET) =    3.00   "Z" FACTOR =   2.000
  MANNING'S FACTOR = 0.030   MAXIMUM DEPTH(FEET) =  10.00
   100 YEAR RAINFALL INTENSITY(INCH/HOUR) =  5.842
  *USER SPECIFIED(GLOBAL):
  NATURAL DESERT LANDSCAPING RUNOFF COEFFICIENT = .3500
  S.C.S. CURVE NUMBER (AMC II) =  85
  TRAVEL TIME COMPUTED USING ESTIMATED FLOW(CFS) =      13.19
  TRAVEL TIME THRU SUBAREA BASED ON VELOCITY(FEET/SEC.) =   8.64
  AVERAGE FLOW DEPTH(FEET) =   0.40   TRAVEL TIME(MIN.) =   0.14
  Tc(MIN.) =    8.83
  SUBAREA AREA(ACRES) =     1.83       SUBAREA RUNOFF(CFS) =    3.74
  AREA-AVERAGE RUNOFF COEFFICIENT =  0.350
  TOTAL AREA(ACRES) =        7.3         PEAK FLOW RATE(CFS) =      14.95

  END OF SUBAREA CHANNEL FLOW HYDRAULICS:
  DEPTH(FEET) =  0.43   FLOW VELOCITY(FEET/SEC.) =   8.95
  LONGEST FLOWPATH FROM NODE    400.00 TO NODE    405.00 =    1106.30 FEET.

****************************************************************************
  FLOW PROCESS FROM NODE    405.00 TO NODE    406.00 IS CODE =  51
----------------------------------------------------------------------------
  >>>>>COMPUTE TRAPEZOIDAL CHANNEL FLOW<<<<<
  >>>>>TRAVELTIME THRU SUBAREA (EXISTING ELEMENT)<<<<<
============================================================================
  ELEVATION DATA: UPSTREAM(FEET) =    756.00  DOWNSTREAM(FEET) =    746.00
  CHANNEL LENGTH THRU SUBAREA(FEET) =    85.70   CHANNEL SLOPE =  0.1167
  CHANNEL BASE(FEET) =    3.00   "Z" FACTOR =   2.000
  MANNING'S FACTOR = 0.030   MAXIMUM DEPTH(FEET) =  10.00
   100 YEAR RAINFALL INTENSITY(INCH/HOUR) =  5.776
  *USER SPECIFIED(GLOBAL):
  NATURAL DESERT LANDSCAPING RUNOFF COEFFICIENT = .3500
  S.C.S. CURVE NUMBER (AMC II) =  85
  TRAVEL TIME COMPUTED USING ESTIMATED FLOW(CFS) =      18.47
  TRAVEL TIME THRU SUBAREA BASED ON VELOCITY(FEET/SEC.) =   9.05
  AVERAGE FLOW DEPTH(FEET) =   0.51   TRAVEL TIME(MIN.) =   0.16
  Tc(MIN.) =    8.99
```

```
  SUBAREA AREA(ACRES) =     3.49       SUBAREA RUNOFF(CFS) =    7.05
  AREA-AVERAGE RUNOFF COEFFICIENT =  0.350
  TOTAL AREA(ACRES) =       10.8         PEAK FLOW RATE(CFS) =      21.83

  END OF SUBAREA CHANNEL FLOW HYDRAULICS:
  DEPTH(FEET) =  0.56   FLOW VELOCITY(FEET/SEC.) =   9.47
  LONGEST FLOWPATH FROM NODE    400.00 TO NODE    406.00 =    1192.00 FEET.

****************************************************************************
  FLOW PROCESS FROM NODE    406.00 TO NODE    407.00 IS CODE =  51
----------------------------------------------------------------------------
  >>>>>COMPUTE TRAPEZOIDAL CHANNEL FLOW<<<<<
  >>>>>TRAVELTIME THRU SUBAREA (EXISTING ELEMENT)<<<<<
============================================================================
  ELEVATION DATA: UPSTREAM(FEET) =    746.00  DOWNSTREAM(FEET) =    726.00
  CHANNEL LENGTH THRU SUBAREA(FEET) =   145.50   CHANNEL SLOPE =  0.1375
  CHANNEL BASE(FEET) =    3.00   "Z" FACTOR =   2.000
  MANNING'S FACTOR = 0.030   MAXIMUM DEPTH(FEET) =  10.00
   100 YEAR RAINFALL INTENSITY(INCH/HOUR) =  5.679
  *USER SPECIFIED(GLOBAL):
  NATURAL DESERT LANDSCAPING RUNOFF COEFFICIENT = .3500
  S.C.S. CURVE NUMBER (AMC II) =  85
  TRAVEL TIME COMPUTED USING ESTIMATED FLOW(CFS) =      22.77
  TRAVEL TIME THRU SUBAREA BASED ON VELOCITY(FEET/SEC.) =  10.18
  AVERAGE FLOW DEPTH(FEET) =   0.55   TRAVEL TIME(MIN.) =   0.24
  Tc(MIN.) =    9.23
  SUBAREA AREA(ACRES) =     0.94       SUBAREA RUNOFF(CFS) =    1.87
  AREA-AVERAGE RUNOFF COEFFICIENT =  0.350
  TOTAL AREA(ACRES) =       11.7         PEAK FLOW RATE(CFS) =      23.34

  END OF SUBAREA CHANNEL FLOW HYDRAULICS:
  DEPTH(FEET) =  0.55   FLOW VELOCITY(FEET/SEC.) =  10.25
  LONGEST FLOWPATH FROM NODE    400.00 TO NODE    407.00 =    1337.50 FEET.

****************************************************************************
  FLOW PROCESS FROM NODE    407.00 TO NODE    408.00 IS CODE =  51
----------------------------------------------------------------------------
  >>>>>COMPUTE TRAPEZOIDAL CHANNEL FLOW<<<<<
  >>>>>TRAVELTIME THRU SUBAREA (EXISTING ELEMENT)<<<<<
============================================================================
  ELEVATION DATA: UPSTREAM(FEET) =    726.00  DOWNSTREAM(FEET) =    707.00
  CHANNEL LENGTH THRU SUBAREA(FEET) =   321.80   CHANNEL SLOPE =  0.0590
  CHANNEL BASE(FEET) =    3.00   "Z" FACTOR =   2.000
  MANNING'S FACTOR = 0.030   MAXIMUM DEPTH(FEET) =  10.00
   100 YEAR RAINFALL INTENSITY(INCH/HOUR) =  5.422
  *USER SPECIFIED(GLOBAL):
  NATURAL DESERT LANDSCAPING RUNOFF COEFFICIENT = .3500
  S.C.S. CURVE NUMBER (AMC II) =  85
  TRAVEL TIME COMPUTED USING ESTIMATED FLOW(CFS) =      25.71
  TRAVEL TIME THRU SUBAREA BASED ON VELOCITY(FEET/SEC.) =   7.82
  AVERAGE FLOW DEPTH(FEET) =   0.74   TRAVEL TIME(MIN.) =   0.69
  Tc(MIN.) =    9.91
  SUBAREA AREA(ACRES) =     2.50       SUBAREA RUNOFF(CFS) =    4.74
  AREA-AVERAGE RUNOFF COEFFICIENT =  0.350
  TOTAL AREA(ACRES) =       14.2         PEAK FLOW RATE(CFS) =      27.03

  END OF SUBAREA CHANNEL FLOW HYDRAULICS:
  DEPTH(FEET) =  0.76   FLOW VELOCITY(FEET/SEC.) =   7.89
  LONGEST FLOWPATH FROM NODE    400.00 TO NODE    408.00 =    1659.30 FEET.

****************************************************************************
  FLOW PROCESS FROM NODE    408.00 TO NODE    409.00 IS CODE =  51
----------------------------------------------------------------------------
```

```
  >>>>>COMPUTE TRAPEZOIDAL CHANNEL FLOW<<<<<
  >>>>>TRAVELTIME THRU SUBAREA (EXISTING ELEMENT)<<<<<
================================================================================
  ELEVATION DATA: UPSTREAM(FEET) =    707.00  DOWNSTREAM(FEET) =    686.00
  CHANNEL LENGTH THRU SUBAREA(FEET) =   527.90   CHANNEL SLOPE =  0.0398
  CHANNEL BASE(FEET) =    3.00   "Z" FACTOR =   2.000
  MANNING'S FACTOR = 0.030   MAXIMUM DEPTH(FEET) =  10.00
   100 YEAR RAINFALL INTENSITY(INCH/HOUR) =  5.018
  *USER SPECIFIED(GLOBAL):
  NATURAL DESERT LANDSCAPING RUNOFF COEFFICIENT = .3500
  S.C.S. CURVE NUMBER (AMC II) =  85
  TRAVEL TIME COMPUTED USING ESTIMATED FLOW(CFS) =      28.46
  TRAVEL TIME THRU SUBAREA BASED ON VELOCITY(FEET/SEC.) =   6.96
  AVERAGE FLOW DEPTH(FEET) =   0.86   TRAVEL TIME(MIN.) =   1.26
  Tc(MIN.) =   11.18
  SUBAREA AREA(ACRES) =     1.63       SUBAREA RUNOFF(CFS) =    2.86
  AREA-AVERAGE RUNOFF COEFFICIENT =  0.350
  TOTAL AREA(ACRES) =       15.9         PEAK FLOW RATE(CFS) =      27.87

  END OF SUBAREA CHANNEL FLOW HYDRAULICS:
  DEPTH(FEET) =  0.85   FLOW VELOCITY(FEET/SEC.) =   6.96
  LONGEST FLOWPATH FROM NODE    400.00 TO NODE    409.00 =    2187.20 FEET.

****************************************************************************
  FLOW PROCESS FROM NODE    409.00 TO NODE    409.00 IS CODE =  10
----------------------------------------------------------------------------
  >>>>>MAIN-STREAM MEMORY COPIED ONTO MEMORY BANK # 1 <<<<<
================================================================================

****************************************************************************
  FLOW PROCESS FROM NODE    410.00 TO NODE    411.00 IS CODE =  21
----------------------------------------------------------------------------
  >>>>>RATIONAL METHOD INITIAL SUBAREA ANALYSIS<<<<<
================================================================================
  *USER SPECIFIED(GLOBAL):
  NATURAL DESERT LANDSCAPING RUNOFF COEFFICIENT = .3500
  S.C.S. CURVE NUMBER (AMC II) =  85
  INITIAL SUBAREA FLOW-LENGTH(FEET) =   134.00
  UPSTREAM ELEVATION(FEET) =    794.00
  DOWNSTREAM ELEVATION(FEET) =    776.00
  ELEVATION DIFFERENCE(FEET) =     18.00
  SUBAREA OVERLAND TIME OF FLOW(MIN.) =    6.267
  WARNING: INITIAL SUBAREA FLOW PATH LENGTH IS GREATER THAN
           THE MAXIMUM OVERLAND FLOW LENGTH =   100.00
           (Reference: Table 3-1B of Hydrology Manual)
           THE MAXIMUM OVERLAND FLOW LENGTH IS USED IN Tc CALCULATION!
   100 YEAR RAINFALL INTENSITY(INCH/HOUR) =  7.288
  SUBAREA RUNOFF(CFS) =      0.26
  TOTAL AREA(ACRES) =      0.10   TOTAL RUNOFF(CFS) =      0.26

****************************************************************************
  FLOW PROCESS FROM NODE    411.00 TO NODE    422.00 IS CODE =  51
----------------------------------------------------------------------------
  >>>>>COMPUTE TRAPEZOIDAL CHANNEL FLOW<<<<<
  >>>>>TRAVELTIME THRU SUBAREA (EXISTING ELEMENT)<<<<<
================================================================================
  ELEVATION DATA: UPSTREAM(FEET) =    776.00  DOWNSTREAM(FEET) =    694.00
  CHANNEL LENGTH THRU SUBAREA(FEET) =   680.00   CHANNEL SLOPE =  0.1206
  CHANNEL BASE(FEET) =    3.00   "Z" FACTOR =   2.000
  MANNING'S FACTOR = 0.030   MAXIMUM DEPTH(FEET) =  10.00
   100 YEAR RAINFALL INTENSITY(INCH/HOUR) =  6.195
  *USER SPECIFIED(GLOBAL):
  NATURAL DESERT LANDSCAPING RUNOFF COEFFICIENT = .3500
```

```
  S.C.S. CURVE NUMBER (AMC II) =  85
  TRAVEL TIME COMPUTED USING ESTIMATED FLOW(CFS) =       5.83
  TRAVEL TIME THRU SUBAREA BASED ON VELOCITY(FEET/SEC.) =   6.31
  AVERAGE FLOW DEPTH(FEET) =   0.26   TRAVEL TIME(MIN.) =   1.80
  Tc(MIN.) =    8.06
  SUBAREA AREA(ACRES) =     5.11       SUBAREA RUNOFF(CFS) =   11.08
  AREA-AVERAGE RUNOFF COEFFICIENT =  0.350
  TOTAL AREA(ACRES) =        5.2         PEAK FLOW RATE(CFS) =      11.30

  END OF SUBAREA CHANNEL FLOW HYDRAULICS:
  DEPTH(FEET) =  0.38   FLOW VELOCITY(FEET/SEC.) =   7.80
  LONGEST FLOWPATH FROM NODE    410.00 TO NODE    422.00 =     814.00 FEET.

****************************************************************************
  FLOW PROCESS FROM NODE    422.00 TO NODE    422.00 IS CODE =   1
----------------------------------------------------------------------------
  >>>>>DESIGNATE INDEPENDENT STREAM FOR CONFLUENCE<<<<<
============================================================================
  TOTAL NUMBER OF STREAMS =  2
  CONFLUENCE VALUES USED FOR INDEPENDENT STREAM  1 ARE:
  TIME OF CONCENTRATION(MIN.) =    8.06
  RAINFALL INTENSITY(INCH/HR) =   6.19
  TOTAL STREAM AREA(ACRES) =     5.21
  PEAK FLOW RATE(CFS) AT CONFLUENCE =     11.30

****************************************************************************
  FLOW PROCESS FROM NODE    423.00 TO NODE    424.00 IS CODE =  21
----------------------------------------------------------------------------
  >>>>>RATIONAL METHOD INITIAL SUBAREA ANALYSIS<<<<<
============================================================================
  *USER SPECIFIED(GLOBAL):
  NATURAL DESERT LANDSCAPING RUNOFF COEFFICIENT = .3500
  S.C.S. CURVE NUMBER (AMC II) =  85
  INITIAL SUBAREA FLOW-LENGTH(FEET) =   102.00
  UPSTREAM ELEVATION(FEET) =    978.00
  DOWNSTREAM ELEVATION(FEET) =    964.00
  ELEVATION DIFFERENCE(FEET) =     14.00
  SUBAREA OVERLAND TIME OF FLOW(MIN.) =    6.267
  WARNING: INITIAL SUBAREA FLOW PATH LENGTH IS GREATER THAN
           THE MAXIMUM OVERLAND FLOW LENGTH =   100.00
           (Reference: Table 3-1B of Hydrology Manual)
           THE MAXIMUM OVERLAND FLOW LENGTH IS USED IN Tc CALCULATION!
   100 YEAR RAINFALL INTENSITY(INCH/HOUR) =  7.288
  SUBAREA RUNOFF(CFS) =      0.28
  TOTAL AREA(ACRES) =      0.11   TOTAL RUNOFF(CFS) =      0.28

****************************************************************************
  FLOW PROCESS FROM NODE    424.00 TO NODE    425.00 IS CODE =  51
----------------------------------------------------------------------------
  >>>>>COMPUTE TRAPEZOIDAL CHANNEL FLOW<<<<<
  >>>>>TRAVELTIME THRU SUBAREA (EXISTING ELEMENT)<<<<<
============================================================================
  ELEVATION DATA: UPSTREAM(FEET) =    964.00  DOWNSTREAM(FEET) =    727.00
  CHANNEL LENGTH THRU SUBAREA(FEET) =   872.00   CHANNEL SLOPE =  0.2718
  CHANNEL BASE(FEET) =    3.00   "Z" FACTOR =   2.000
  MANNING'S FACTOR = 0.030   MAXIMUM DEPTH(FEET) =  10.00
   100 YEAR RAINFALL INTENSITY(INCH/HOUR) =  6.329
  *USER SPECIFIED(GLOBAL):
  NATURAL DESERT LANDSCAPING RUNOFF COEFFICIENT = .3500
  S.C.S. CURVE NUMBER (AMC II) =  85
  TRAVEL TIME COMPUTED USING ESTIMATED FLOW(CFS) =       8.55
  TRAVEL TIME THRU SUBAREA BASED ON VELOCITY(FEET/SEC.) =   9.48
  AVERAGE FLOW DEPTH(FEET) =   0.26   TRAVEL TIME(MIN.) =   1.53
```

```
  Tc(MIN.) =    7.80
  SUBAREA AREA(ACRES) =     7.43       SUBAREA RUNOFF(CFS) =   16.46
  AREA-AVERAGE RUNOFF COEFFICIENT =  0.350
  TOTAL AREA(ACRES) =        7.5         PEAK FLOW RATE(CFS) =      16.70

  END OF SUBAREA CHANNEL FLOW HYDRAULICS:
  DEPTH(FEET) =  0.38   FLOW VELOCITY(FEET/SEC.) =  11.74
  LONGEST FLOWPATH FROM NODE    423.00 TO NODE    425.00 =     974.00 FEET.

****************************************************************************
  FLOW PROCESS FROM NODE    425.00 TO NODE    422.00 IS CODE =  51
----------------------------------------------------------------------------
  >>>>>COMPUTE TRAPEZOIDAL CHANNEL FLOW<<<<<
  >>>>>TRAVELTIME THRU SUBAREA (EXISTING ELEMENT)<<<<<
============================================================================
  ELEVATION DATA: UPSTREAM(FEET) =    727.00  DOWNSTREAM(FEET) =    693.00
  CHANNEL LENGTH THRU SUBAREA(FEET) =   750.00   CHANNEL SLOPE =  0.0453
  CHANNEL BASE(FEET) =    3.00   "Z" FACTOR =   2.000
  MANNING'S FACTOR = 0.030   MAXIMUM DEPTH(FEET) =  10.00
   100 YEAR RAINFALL INTENSITY(INCH/HOUR) =  5.489
  *USER SPECIFIED(GLOBAL):
  NATURAL DESERT LANDSCAPING RUNOFF COEFFICIENT = .3500
  S.C.S. CURVE NUMBER (AMC II) =  85
  TRAVEL TIME COMPUTED USING ESTIMATED FLOW(CFS) =      19.03
  TRAVEL TIME THRU SUBAREA BASED ON VELOCITY(FEET/SEC.) =   6.49
  AVERAGE FLOW DEPTH(FEET) =   0.67   TRAVEL TIME(MIN.) =   1.93
  Tc(MIN.) =    9.73
  SUBAREA AREA(ACRES) =     2.42       SUBAREA RUNOFF(CFS) =    4.65
  AREA-AVERAGE RUNOFF COEFFICIENT =  0.350
  TOTAL AREA(ACRES) =       10.0         PEAK FLOW RATE(CFS) =      19.14

  END OF SUBAREA CHANNEL FLOW HYDRAULICS:
  DEPTH(FEET) =  0.67   FLOW VELOCITY(FEET/SEC.) =   6.53
  LONGEST FLOWPATH FROM NODE    423.00 TO NODE    422.00 =    1724.00 FEET.

****************************************************************************
  FLOW PROCESS FROM NODE    422.00 TO NODE    422.00 IS CODE =   1
----------------------------------------------------------------------------
  >>>>>DESIGNATE INDEPENDENT STREAM FOR CONFLUENCE<<<<<
  >>>>>AND COMPUTE VARIOUS CONFLUENCED STREAM VALUES<<<<<
============================================================================
  TOTAL NUMBER OF STREAMS =  2
  CONFLUENCE VALUES USED FOR INDEPENDENT STREAM  2 ARE:
  TIME OF CONCENTRATION(MIN.) =    9.73
  RAINFALL INTENSITY(INCH/HR) =   5.49
  TOTAL STREAM AREA(ACRES) =     9.96
  PEAK FLOW RATE(CFS) AT CONFLUENCE =     19.14

  ** CONFLUENCE DATA **
  STREAM     RUNOFF       Tc      INTENSITY      AREA
  NUMBER      (CFS)     (MIN.)   (INCH/HOUR)    (ACRE)
      1       11.30     8.06        6.195          5.21
      2       19.14     9.73        5.489          9.96

  RAINFALL INTENSITY AND TIME OF CONCENTRATION RATIO
  CONFLUENCE FORMULA USED FOR  2 STREAMS.

  ** PEAK FLOW RATE TABLE **
  STREAM     RUNOFF      Tc      INTENSITY
  NUMBER      (CFS)    (MIN.)   (INCH/HOUR)
      1       27.16     8.06       6.195
      2       29.15     9.73       5.489
```

```
  COMPUTED CONFLUENCE ESTIMATES ARE AS FOLLOWS:
  PEAK FLOW RATE(CFS) =      29.15   Tc(MIN.) =    9.73
  TOTAL AREA(ACRES) =       15.2
  LONGEST FLOWPATH FROM NODE    423.00 TO NODE    422.00 =    1724.00 FEET.

****************************************************************************
  FLOW PROCESS FROM NODE    422.00 TO NODE    409.00 IS CODE =  51
----------------------------------------------------------------------------
  >>>>>COMPUTE TRAPEZOIDAL CHANNEL FLOW<<<<<
  >>>>>TRAVELTIME THRU SUBAREA (EXISTING ELEMENT)<<<<<
============================================================================
  ELEVATION DATA: UPSTREAM(FEET) =    693.00  DOWNSTREAM(FEET) =    686.00
  CHANNEL LENGTH THRU SUBAREA(FEET) =   414.00   CHANNEL SLOPE =  0.0169
  CHANNEL BASE(FEET) =    3.00   "Z" FACTOR =   2.000
  MANNING'S FACTOR = 0.013   MAXIMUM DEPTH(FEET) =  10.00
   100 YEAR RAINFALL INTENSITY(INCH/HOUR) =  5.239
  *USER SPECIFIED(GLOBAL):
  NATURAL DESERT LANDSCAPING RUNOFF COEFFICIENT = .3500
  S.C.S. CURVE NUMBER (AMC II) =  85
  TRAVEL TIME COMPUTED USING ESTIMATED FLOW(CFS) =      29.82
  TRAVEL TIME THRU SUBAREA BASED ON VELOCITY(FEET/SEC.) =   9.46
  AVERAGE FLOW DEPTH(FEET) =   0.71   TRAVEL TIME(MIN.) =   0.73
  Tc(MIN.) =   10.45
  SUBAREA AREA(ACRES) =     0.74       SUBAREA RUNOFF(CFS) =    1.36
  AREA-AVERAGE RUNOFF COEFFICIENT =  0.350
  TOTAL AREA(ACRES) =       15.9         PEAK FLOW RATE(CFS) =      29.18

  END OF SUBAREA CHANNEL FLOW HYDRAULICS:
  DEPTH(FEET) =  0.70   FLOW VELOCITY(FEET/SEC.) =   9.39
  LONGEST FLOWPATH FROM NODE    423.00 TO NODE    409.00 =    2138.00 FEET.

****************************************************************************
  FLOW PROCESS FROM NODE    409.00 TO NODE    409.00 IS CODE =  11
----------------------------------------------------------------------------
  >>>>>CONFLUENCE MEMORY BANK # 1 WITH THE MAIN-STREAM MEMORY<<<<<
============================================================================

  ** MAIN STREAM CONFLUENCE DATA **
  STREAM     RUNOFF      Tc      INTENSITY     AREA
  NUMBER      (CFS)    (MIN.)   (INCH/HOUR)   (ACRE)
      1       29.18    10.45       5.239       15.91
  LONGEST FLOWPATH FROM NODE    423.00 TO NODE    409.00 =    2138.00 FEET.

  ** MEMORY BANK #  1 CONFLUENCE DATA **
  STREAM     RUNOFF      Tc      INTENSITY     AREA
  NUMBER      (CFS)    (MIN.)   (INCH/HOUR)   (ACRE)
      1       27.87    11.18       5.018       15.87
  LONGEST FLOWPATH FROM NODE    400.00 TO NODE    409.00 =    2187.20 FEET.

  ** PEAK FLOW RATE TABLE **
  STREAM    RUNOFF       Tc      INTENSITY
  NUMBER     (CFS)     (MIN.)   (INCH/HOUR)
      1      55.25      10.45        5.239
      2      55.82      11.18        5.018

  COMPUTED CONFLUENCE ESTIMATES ARE AS FOLLOWS:
  PEAK FLOW RATE(CFS) =      55.82   Tc(MIN.) =   11.18
  TOTAL AREA(ACRES) =       31.8

****************************************************************************
  FLOW PROCESS FROM NODE    409.00 TO NODE    409.00 IS CODE =  12
----------------------------------------------------------------------------
  >>>>>CLEAR MEMORY BANK # 1 <<<<<
```

```
==============================================================================

******************************************************************************
  FLOW PROCESS FROM NODE    409.00 TO NODE    412.00 IS CODE =  51
------------------------------------------------------------------------------
  >>>>>COMPUTE TRAPEZOIDAL CHANNEL FLOW<<<<<
  >>>>>TRAVELTIME THRU SUBAREA (EXISTING ELEMENT)<<<<<
==============================================================================
  ELEVATION DATA: UPSTREAM(FEET) =    686.00  DOWNSTREAM(FEET) =    684.00
  CHANNEL LENGTH THRU SUBAREA(FEET) =   261.50   CHANNEL SLOPE =  0.0076
  CHANNEL BASE(FEET) =    3.00   "Z" FACTOR =   2.000
  MANNING'S FACTOR = 0.030   MAXIMUM DEPTH(FEET) =  10.00
   100 YEAR RAINFALL INTENSITY(INCH/HOUR) =  4.765
  *USER SPECIFIED(GLOBAL):
  NATURAL DESERT LANDSCAPING RUNOFF COEFFICIENT = .3500
  S.C.S. CURVE NUMBER (AMC II) =  85
  TRAVEL TIME COMPUTED USING ESTIMATED FLOW(CFS) =      58.92
  TRAVEL TIME THRU SUBAREA BASED ON VELOCITY(FEET/SEC.) =   4.66
  AVERAGE FLOW DEPTH(FEET) =   1.87   TRAVEL TIME(MIN.) =   0.94
  Tc(MIN.) =   12.11
  SUBAREA AREA(ACRES) =     3.72       SUBAREA RUNOFF(CFS) =    6.20
  AREA-AVERAGE RUNOFF COEFFICIENT =  0.350
  TOTAL AREA(ACRES) =       35.5         PEAK FLOW RATE(CFS) =      59.20

  END OF SUBAREA CHANNEL FLOW HYDRAULICS:
  DEPTH(FEET) =  1.88   FLOW VELOCITY(FEET/SEC.) =   4.66
  LONGEST FLOWPATH FROM NODE    400.00 TO NODE    412.00 =    2448.70 FEET.

******************************************************************************
  FLOW PROCESS FROM NODE    412.00 TO NODE    412.00 IS CODE =   1
------------------------------------------------------------------------------
  >>>>>DESIGNATE INDEPENDENT STREAM FOR CONFLUENCE<<<<<
==============================================================================
  TOTAL NUMBER OF STREAMS =  4
  CONFLUENCE VALUES USED FOR INDEPENDENT STREAM  1 ARE:
  TIME OF CONCENTRATION(MIN.) =   12.11
  RAINFALL INTENSITY(INCH/HR) =   4.76
  TOTAL STREAM AREA(ACRES) =    35.50
  PEAK FLOW RATE(CFS) AT CONFLUENCE =     59.20

******************************************************************************
  FLOW PROCESS FROM NODE    413.00 TO NODE    414.00 IS CODE =  21
------------------------------------------------------------------------------
  >>>>>RATIONAL METHOD INITIAL SUBAREA ANALYSIS<<<<<
==============================================================================
  *USER SPECIFIED(GLOBAL):
  NATURAL DESERT LANDSCAPING RUNOFF COEFFICIENT = .3500
  S.C.S. CURVE NUMBER (AMC II) =  85
  INITIAL SUBAREA FLOW-LENGTH(FEET) =   100.00
  UPSTREAM ELEVATION(FEET) =    914.00
  DOWNSTREAM ELEVATION(FEET) =    863.00
  ELEVATION DIFFERENCE(FEET) =     51.00
  SUBAREA OVERLAND TIME OF FLOW(MIN.) =    6.267
  WARNING: THE MAXIMUM OVERLAND FLOW SLOPE, 10.%, IS USED IN Tc CALCULATION!
   100 YEAR RAINFALL INTENSITY(INCH/HOUR) =  7.288
  SUBAREA RUNOFF(CFS) =      0.26
  TOTAL AREA(ACRES) =      0.10   TOTAL RUNOFF(CFS) =      0.26

******************************************************************************
  FLOW PROCESS FROM NODE    414.00 TO NODE    415.00 IS CODE =  51
------------------------------------------------------------------------------
  >>>>>COMPUTE TRAPEZOIDAL CHANNEL FLOW<<<<<
  >>>>>TRAVELTIME THRU SUBAREA (EXISTING ELEMENT)<<<<<
```

```
==============================================================================
  ELEVATION DATA: UPSTREAM(FEET) =    863.00  DOWNSTREAM(FEET) =    785.00
  CHANNEL LENGTH THRU SUBAREA(FEET) =   265.70   CHANNEL SLOPE =  0.2936
  CHANNEL BASE(FEET) =    3.00   "Z" FACTOR =   2.000
  MANNING'S FACTOR = 0.030   MAXIMUM DEPTH(FEET) =  10.00
   100 YEAR RAINFALL INTENSITY(INCH/HOUR) =  6.650
  *USER SPECIFIED(GLOBAL):
  NATURAL DESERT LANDSCAPING RUNOFF COEFFICIENT = .3500
  S.C.S. CURVE NUMBER (AMC II) =  85
  TRAVEL TIME COMPUTED USING ESTIMATED FLOW(CFS) =       1.07
  TRAVEL TIME THRU SUBAREA BASED ON VELOCITY(FEET/SEC.) =   4.63
  AVERAGE FLOW DEPTH(FEET) =   0.07   TRAVEL TIME(MIN.) =   0.96
  Tc(MIN.) =    7.22
  SUBAREA AREA(ACRES) =     0.70       SUBAREA RUNOFF(CFS) =    1.63
  AREA-AVERAGE RUNOFF COEFFICIENT =  0.350
  TOTAL AREA(ACRES) =        0.8         PEAK FLOW RATE(CFS) =       1.86

  END OF SUBAREA CHANNEL FLOW HYDRAULICS:
  DEPTH(FEET) =  0.10   FLOW VELOCITY(FEET/SEC.) =   5.58
  LONGEST FLOWPATH FROM NODE    413.00 TO NODE    415.00 =     365.70 FEET.

****************************************************************************
  FLOW PROCESS FROM NODE    415.00 TO NODE    416.00 IS CODE =  51
----------------------------------------------------------------------------
  >>>>>COMPUTE TRAPEZOIDAL CHANNEL FLOW<<<<<
  >>>>>TRAVELTIME THRU SUBAREA (EXISTING ELEMENT)<<<<<
==============================================================================
  ELEVATION DATA: UPSTREAM(FEET) =    785.00  DOWNSTREAM(FEET) =    769.00
  CHANNEL LENGTH THRU SUBAREA(FEET) =   104.60   CHANNEL SLOPE =  0.1530
  CHANNEL BASE(FEET) =    3.00   "Z" FACTOR =   2.000
  MANNING'S FACTOR = 0.030   MAXIMUM DEPTH(FEET) =  10.00
   100 YEAR RAINFALL INTENSITY(INCH/HOUR) =  6.471
  *USER SPECIFIED(GLOBAL):
  NATURAL DESERT LANDSCAPING RUNOFF COEFFICIENT = .3500
  S.C.S. CURVE NUMBER (AMC II) =  85
  TRAVEL TIME COMPUTED USING ESTIMATED FLOW(CFS) =       3.35
  TRAVEL TIME THRU SUBAREA BASED ON VELOCITY(FEET/SEC.) =   5.59
  AVERAGE FLOW DEPTH(FEET) =   0.18   TRAVEL TIME(MIN.) =   0.31
  Tc(MIN.) =    7.54
  SUBAREA AREA(ACRES) =     1.31       SUBAREA RUNOFF(CFS) =    2.97
  AREA-AVERAGE RUNOFF COEFFICIENT =  0.350
  TOTAL AREA(ACRES) =        2.1         PEAK FLOW RATE(CFS) =       4.78

  END OF SUBAREA CHANNEL FLOW HYDRAULICS:
  DEPTH(FEET) =  0.22   FLOW VELOCITY(FEET/SEC.) =   6.37
  LONGEST FLOWPATH FROM NODE    413.00 TO NODE    416.00 =     470.30 FEET.

****************************************************************************
  FLOW PROCESS FROM NODE    416.00 TO NODE    417.00 IS CODE =  51
----------------------------------------------------------------------------
  >>>>>COMPUTE TRAPEZOIDAL CHANNEL FLOW<<<<<
  >>>>>TRAVELTIME THRU SUBAREA (EXISTING ELEMENT)<<<<<
==============================================================================
  ELEVATION DATA: UPSTREAM(FEET) =    769.00  DOWNSTREAM(FEET) =    728.00
  CHANNEL LENGTH THRU SUBAREA(FEET) =   369.40   CHANNEL SLOPE =  0.1110
  CHANNEL BASE(FEET) =    3.00   "Z" FACTOR =   2.000
  MANNING'S FACTOR = 0.030   MAXIMUM DEPTH(FEET) =  10.00
   100 YEAR RAINFALL INTENSITY(INCH/HOUR) =  5.987
  *USER SPECIFIED(GLOBAL):
  NATURAL DESERT LANDSCAPING RUNOFF COEFFICIENT = .3500
  S.C.S. CURVE NUMBER (AMC II) =  85
  TRAVEL TIME COMPUTED USING ESTIMATED FLOW(CFS) =       6.69
  TRAVEL TIME THRU SUBAREA BASED ON VELOCITY(FEET/SEC.) =   6.37
```

```
  AVERAGE FLOW DEPTH(FEET) =   0.29   TRAVEL TIME(MIN.) =   0.97
  Tc(MIN.) =    8.50
  SUBAREA AREA(ACRES) =     1.82       SUBAREA RUNOFF(CFS) =    3.81
  AREA-AVERAGE RUNOFF COEFFICIENT =  0.350
  TOTAL AREA(ACRES) =        3.9         PEAK FLOW RATE(CFS) =       8.23

  END OF SUBAREA CHANNEL FLOW HYDRAULICS:
  DEPTH(FEET) =  0.33   FLOW VELOCITY(FEET/SEC.) =   6.94
  LONGEST FLOWPATH FROM NODE    413.00 TO NODE    417.00 =     839.70 FEET.

****************************************************************************
  FLOW PROCESS FROM NODE    417.00 TO NODE    412.00 IS CODE =  51
----------------------------------------------------------------------------
  >>>>>COMPUTE TRAPEZOIDAL CHANNEL FLOW<<<<<
  >>>>>TRAVELTIME THRU SUBAREA (EXISTING ELEMENT)<<<<<
============================================================================
  ELEVATION DATA: UPSTREAM(FEET) =    728.00  DOWNSTREAM(FEET) =    684.00
  CHANNEL LENGTH THRU SUBAREA(FEET) =   684.40   CHANNEL SLOPE =  0.0643
  CHANNEL BASE(FEET) =    3.00   "Z" FACTOR =   2.000
  MANNING'S FACTOR = 0.030   MAXIMUM DEPTH(FEET) =  10.00
   100 YEAR RAINFALL INTENSITY(INCH/HOUR) =  5.238
  *USER SPECIFIED(GLOBAL):
  NATURAL DESERT LANDSCAPING RUNOFF COEFFICIENT = .3500
  S.C.S. CURVE NUMBER (AMC II) =  85
  TRAVEL TIME COMPUTED USING ESTIMATED FLOW(CFS) =       8.90
  TRAVEL TIME THRU SUBAREA BASED ON VELOCITY(FEET/SEC.) =   5.83
  AVERAGE FLOW DEPTH(FEET) =   0.40   TRAVEL TIME(MIN.) =   1.96
  Tc(MIN.) =   10.46
  SUBAREA AREA(ACRES) =     0.73       SUBAREA RUNOFF(CFS) =    1.34
  AREA-AVERAGE RUNOFF COEFFICIENT =  0.350
  TOTAL AREA(ACRES) =        4.7         PEAK FLOW RATE(CFS) =       8.54

  END OF SUBAREA CHANNEL FLOW HYDRAULICS:
  DEPTH(FEET) =  0.39   FLOW VELOCITY(FEET/SEC.) =   5.76
  LONGEST FLOWPATH FROM NODE    413.00 TO NODE    412.00 =    1524.10 FEET.

****************************************************************************
  FLOW PROCESS FROM NODE    412.00 TO NODE    412.00 IS CODE =   1
----------------------------------------------------------------------------
  >>>>>DESIGNATE INDEPENDENT STREAM FOR CONFLUENCE<<<<<
============================================================================
  TOTAL NUMBER OF STREAMS =  4
  CONFLUENCE VALUES USED FOR INDEPENDENT STREAM  2 ARE:
  TIME OF CONCENTRATION(MIN.) =   10.46
  RAINFALL INTENSITY(INCH/HR) =   5.24
  TOTAL STREAM AREA(ACRES) =     4.66
  PEAK FLOW RATE(CFS) AT CONFLUENCE =      8.54

****************************************************************************
  FLOW PROCESS FROM NODE    418.00 TO NODE    419.00 IS CODE =  21
----------------------------------------------------------------------------
  >>>>>RATIONAL METHOD INITIAL SUBAREA ANALYSIS<<<<<
============================================================================
  *USER SPECIFIED(GLOBAL):
  NATURAL DESERT LANDSCAPING RUNOFF COEFFICIENT = .3500
  S.C.S. CURVE NUMBER (AMC II) =  85
  INITIAL SUBAREA FLOW-LENGTH(FEET) =   100.00
  UPSTREAM ELEVATION(FEET) =    805.00
  DOWNSTREAM ELEVATION(FEET) =    787.00
  ELEVATION DIFFERENCE(FEET) =     18.00
  SUBAREA OVERLAND TIME OF FLOW(MIN.) =    6.267
  WARNING: THE MAXIMUM OVERLAND FLOW SLOPE, 10.%, IS USED IN Tc CALCULATION!
   100 YEAR RAINFALL INTENSITY(INCH/HOUR) =  7.288
```

```
  SUBAREA RUNOFF(CFS) =      0.28
  TOTAL AREA(ACRES) =      0.11   TOTAL RUNOFF(CFS) =      0.28

****************************************************************************
  FLOW PROCESS FROM NODE    419.00 TO NODE    412.00 IS CODE =  51
----------------------------------------------------------------------------
  >>>>>COMPUTE TRAPEZOIDAL CHANNEL FLOW<<<<<
  >>>>>TRAVELTIME THRU SUBAREA (EXISTING ELEMENT)<<<<<
============================================================================
  ELEVATION DATA: UPSTREAM(FEET) =    787.00  DOWNSTREAM(FEET) =    684.00
  CHANNEL LENGTH THRU SUBAREA(FEET) =   955.10   CHANNEL SLOPE =  0.1078
  CHANNEL BASE(FEET) =    3.00   "Z" FACTOR =   2.000
  MANNING'S FACTOR = 0.030   MAXIMUM DEPTH(FEET) =  10.00
   100 YEAR RAINFALL INTENSITY(INCH/HOUR) =  5.784
  *USER SPECIFIED(GLOBAL):
  NATURAL DESERT LANDSCAPING RUNOFF COEFFICIENT = .3500
  S.C.S. CURVE NUMBER (AMC II) =  85
  TRAVEL TIME COMPUTED USING ESTIMATED FLOW(CFS) =       5.45
  TRAVEL TIME THRU SUBAREA BASED ON VELOCITY(FEET/SEC.) =   5.89
  AVERAGE FLOW DEPTH(FEET) =   0.26   TRAVEL TIME(MIN.) =   2.70
  Tc(MIN.) =    8.97
  SUBAREA AREA(ACRES) =     5.03       SUBAREA RUNOFF(CFS) =   10.18
  AREA-AVERAGE RUNOFF COEFFICIENT =  0.350
  TOTAL AREA(ACRES) =        5.1         PEAK FLOW RATE(CFS) =      10.41

  END OF SUBAREA CHANNEL FLOW HYDRAULICS:
  DEPTH(FEET) =  0.38   FLOW VELOCITY(FEET/SEC.) =   7.32
  LONGEST FLOWPATH FROM NODE    418.00 TO NODE    412.00 =    1055.10 FEET.

****************************************************************************
  FLOW PROCESS FROM NODE    412.00 TO NODE    412.00 IS CODE =   1
----------------------------------------------------------------------------
  >>>>>DESIGNATE INDEPENDENT STREAM FOR CONFLUENCE<<<<<
============================================================================
  TOTAL NUMBER OF STREAMS =  4
  CONFLUENCE VALUES USED FOR INDEPENDENT STREAM  3 ARE:
  TIME OF CONCENTRATION(MIN.) =    8.97
  RAINFALL INTENSITY(INCH/HR) =   5.78
  TOTAL STREAM AREA(ACRES) =     5.14
  PEAK FLOW RATE(CFS) AT CONFLUENCE =     10.41

****************************************************************************
  FLOW PROCESS FROM NODE    420.00 TO NODE    421.00 IS CODE =  21
----------------------------------------------------------------------------
  >>>>>RATIONAL METHOD INITIAL SUBAREA ANALYSIS<<<<<
============================================================================
  *USER SPECIFIED(GLOBAL):
  NATURAL DESERT LANDSCAPING RUNOFF COEFFICIENT = .3500
  S.C.S. CURVE NUMBER (AMC II) =  85
  INITIAL SUBAREA FLOW-LENGTH(FEET) =   100.00
  UPSTREAM ELEVATION(FEET) =    761.00
  DOWNSTREAM ELEVATION(FEET) =    738.00
  ELEVATION DIFFERENCE(FEET) =     23.00
  SUBAREA OVERLAND TIME OF FLOW(MIN.) =    6.267
  WARNING: THE MAXIMUM OVERLAND FLOW SLOPE, 10.%, IS USED IN Tc CALCULATION!
   100 YEAR RAINFALL INTENSITY(INCH/HOUR) =  7.288
  SUBAREA RUNOFF(CFS) =      0.26
  TOTAL AREA(ACRES) =      0.10   TOTAL RUNOFF(CFS) =      0.26

****************************************************************************
  FLOW PROCESS FROM NODE    421.00 TO NODE    412.00 IS CODE =  51
----------------------------------------------------------------------------
  >>>>>COMPUTE TRAPEZOIDAL CHANNEL FLOW<<<<<
```

```
  >>>>>TRAVELTIME THRU SUBAREA (EXISTING ELEMENT)<<<<<
==============================================================================
  ELEVATION DATA: UPSTREAM(FEET) =    738.00  DOWNSTREAM(FEET) =    684.00
  CHANNEL LENGTH THRU SUBAREA(FEET) =   705.40   CHANNEL SLOPE =  0.0766
  CHANNEL BASE(FEET) =    3.00   "Z" FACTOR =   2.000
  MANNING'S FACTOR = 0.030   MAXIMUM DEPTH(FEET) =  10.00
   100 YEAR RAINFALL INTENSITY(INCH/HOUR) =  5.897
  *USER SPECIFIED(GLOBAL):
  NATURAL DESERT LANDSCAPING RUNOFF COEFFICIENT = .3500
  S.C.S. CURVE NUMBER (AMC II) =  85
  TRAVEL TIME COMPUTED USING ESTIMATED FLOW(CFS) =       4.16
  TRAVEL TIME THRU SUBAREA BASED ON VELOCITY(FEET/SEC.) =   4.82
  AVERAGE FLOW DEPTH(FEET) =   0.25   TRAVEL TIME(MIN.) =   2.44
  Tc(MIN.) =    8.70
  SUBAREA AREA(ACRES) =     3.75       SUBAREA RUNOFF(CFS) =    7.74
  AREA-AVERAGE RUNOFF COEFFICIENT =  0.350
  TOTAL AREA(ACRES) =        3.8         PEAK FLOW RATE(CFS) =       7.95

  END OF SUBAREA CHANNEL FLOW HYDRAULICS:
  DEPTH(FEET) =  0.36   FLOW VELOCITY(FEET/SEC.) =   6.02
  LONGEST FLOWPATH FROM NODE    420.00 TO NODE    412.00 =     805.40 FEET.

****************************************************************************
  FLOW PROCESS FROM NODE    412.00 TO NODE    412.00 IS CODE =   1
----------------------------------------------------------------------------
  >>>>>DESIGNATE INDEPENDENT STREAM FOR CONFLUENCE<<<<<
  >>>>>AND COMPUTE VARIOUS CONFLUENCED STREAM VALUES<<<<<
==============================================================================
  TOTAL NUMBER OF STREAMS =  4
  CONFLUENCE VALUES USED FOR INDEPENDENT STREAM  4 ARE:
  TIME OF CONCENTRATION(MIN.) =    8.70
  RAINFALL INTENSITY(INCH/HR) =   5.90
  TOTAL STREAM AREA(ACRES) =     3.85
  PEAK FLOW RATE(CFS) AT CONFLUENCE =      7.95

  ** CONFLUENCE DATA **
  STREAM     RUNOFF       Tc      INTENSITY      AREA
  NUMBER      (CFS)     (MIN.)   (INCH/HOUR)    (ACRE)
      1       59.20    12.11        4.765         35.50
      2        8.54    10.46        5.238          4.66
      3       10.41     8.97        5.784          5.14
      4        7.95     8.70        5.897          3.85

  RAINFALL INTENSITY AND TIME OF CONCENTRATION RATIO
  CONFLUENCE FORMULA USED FOR  4 STREAMS.

  ** PEAK FLOW RATE TABLE **
  STREAM     RUNOFF      Tc      INTENSITY
  NUMBER      (CFS)    (MIN.)   (INCH/HOUR)
      1       67.69     8.70       5.897
      2       69.35     8.97       5.784
      3       76.14    10.46       5.238
      4       81.96    12.11       4.765

  COMPUTED CONFLUENCE ESTIMATES ARE AS FOLLOWS:
  PEAK FLOW RATE(CFS) =      81.96   Tc(MIN.) =   12.11
  TOTAL AREA(ACRES) =       49.1
  LONGEST FLOWPATH FROM NODE    400.00 TO NODE    412.00 =    2448.70 FEET.
==============================================================================
  END OF STUDY SUMMARY:
  TOTAL AREA(ACRES)     =       49.1  TC(MIN.) =     12.11
  PEAK FLOW RATE(CFS)   =      81.96
==============================================================================
```

==========

END OF RATIONAL METHOD ANALYSIS

BASIN A

FUSCOE ENGINEERING
6390 Greenwich Drive, Suite 170
San Diego, California 92122
tel 858.554.1500 ∘ fax 858.597.0335
www.fuscoe.com

Job Name: Valiano
Proposed Hydrology
100 Year Design Storm
Job #: 2690-007-02

Date:
Oct. 2014

Run Name:
P-100.DAT

Node to Node		Code	Elev 1 (feet)	Elev 2 (feet)	Length (feet)	C Factor	Area (ac.)	Comments
100	101	2	1015	1000	108	0.35	0.10	
101	102	5	1000	950	308	0.35	1.35	
102	103	5	950	863	387	0.35	2.28	
103	104	5	863	832	200	0.35	0.43	1 of 3
104	104	1						
105	106	2	975	967	100	0.35	0.10	
106	107	5	967	918	220	0.35	0.92	
107	104	5	918	832	385	0.35	1.58	
104	104	1						2 of 3
109	104	2	896	832	333	0.35	0.96	
104	104	1						3 of 3
104	110	5	832	816	151	0.35	0.97	
110	110	10						save to bank 1
116	117	2	882	880	85	0.71	0.30	
117	118	6	880	874	310	0.71	2.44	
118	119	3	869	854	75			
119	119	1						1 of 2
119.1	119	2	876	854	75	0.35	0.36	
119	119	1						2 of 2
119	120	3	851	834	80			
120	110	5	834	816	145	0.35	0.57	
110	110	11						add bank 1
110	110	12						clear bank 1
110	111	5	816	786	316	0.35	1.39	
111	111	1						1 of 2
112	113	2	975	950	128	0.35	0.11	
113	114	5	950	875	395	0.35	1.25	
114	111	5	875	786	668	0.35	2.75	
111	111	1						2 of 2
111	115	5	786	775	255.0	0.35	0.86	
115	115	10						save to bank 1
125	122	2	880	806	375	0.35	0.77	
122	122	1						1 of 3

FUSCOE ENGINEERING
6390 Greenwich Drive, Suite 170
San Diego, California 92122
tel 858.554.1500 • fax 858.597.0335
www.fuscoe.com

Job Name: Valiano
Proposed Hydrology
100 Year Design Storm
Job #: 2690-007-02

Date:
Oct. 2014

Run Name:
P-100.DAT

Node to Node		Code	Elev 1 (feet)	Elev 2 (feet)	Length (feet)	C Factor	Area (ac.)	Comments
121	122	2	869	806	500	0.35	1.34	
122	122	1						2 of 3
123	124	2	847	831	87	0.35	0.10	
124	122	5	831	806	275	0.35	0.51	
122	122	1						3 of 3
122	129	5	806	786	250	0.35	0.40	
129	129	1						1 of 2
127	128	2	876	804	315	0.35	1.24	
128	129	5	804	786	185	0.35	0.40	
129	129	1						2 of 2
129	130	5	786	780	95	0.35	0.08	
130	130	1						1 of 2
131	132	2	814	804	105	0.35	0.10	
132	130	5	804	780	337	0.35	0.34	
130	130	1						2 of 2
130	115	5	780	775	130	0.35	2.32	
115	115	1						1 of 2
133	115	2	794	775	305	0.35	0.36	
115	115	1						2 of 2
115	115	11						

```
****************************************************************************

            RATIONAL METHOD HYDROLOGY COMPUTER PROGRAM PACKAGE
            Reference: SAN DIEGO COUNTY FLOOD CONTROL DISTRICT
                         2003,1985,1981 HYDROLOGY MANUAL
         (c) Copyright 1982-2012 Advanced Engineering Software (aes)
             Ver. 19.0 Release Date: 06/01/2012  License ID 1355

                           Analysis prepared by:

                             Fuscoe Engineering
                             6390 Greenwich Dr.
                                 Suite 170
                            San Diego, CA 92122

 ************************** DESCRIPTION OF STUDY **************************
* VALIANO PROPOSED HYDROLOGY                                               *
* 100 SERIES                                                               *
* OCTOBER 20, 2014                                                         *
 ***************************************************************************

  FILE NAME: P-100.DAT
  TIME/DATE OF STUDY: 11:04 10/21/2014
----------------------------------------------------------------------------
  USER SPECIFIED HYDROLOGY AND HYDRAULIC MODEL INFORMATION:
----------------------------------------------------------------------------
  2003 SAN DIEGO MANUAL CRITERIA

  USER SPECIFIED STORM EVENT(YEAR) = 100.00
  6-HOUR DURATION PRECIPITATION (INCHES) =   3.200
  SPECIFIED MINIMUM PIPE SIZE(INCH) =  12.00
  SPECIFIED PERCENT OF GRADIENTS(DECIMAL) TO USE FOR FRICTION SLOPE = 0.90
  SAN DIEGO HYDROLOGY MANUAL "C"-VALUES USED FOR RATIONAL METHOD
  NOTE: USE MODIFIED RATIONAL METHOD PROCEDURES FOR CONFLUENCE ANALYSIS
  *USER-DEFINED STREET-SECTIONS FOR COUPLED PIPEFLOW AND STREETFLOW MODEL*
     HALF-  CROWN TO   STREET-CROSSFALL:   CURB  GUTTER-GEOMETRIES:  MANNING
     WIDTH  CROSSFALL  IN-  / OUT-/PARK-  HEIGHT  WIDTH  LIP   HIKE  FACTOR
NO.   (FT)     (FT)    SIDE / SIDE/ WAY    (FT)    (FT)  (FT)  (FT)    (n)
===  =====  =========  =================  ======  ===== ====== ===== =======
  1   20.0      8.0    0.020/0.020/0.020   0.33    0.10 0.0100 0.010 0.0150

  GLOBAL STREET FLOW-DEPTH CONSTRAINTS:
    1. Relative Flow-Depth =  0.33 FEET
       as (Maximum Allowable Street Flow Depth) - (Top-of-Curb)
    2. (Depth)*(Velocity) Constraint =  6.0 (FT*FT/S)
  *SIZE PIPE WITH A FLOW CAPACITY GREATER THAN
   OR EQUAL TO THE UPSTREAM TRIBUTARY PIPE.*

****************************************************************************
  FLOW PROCESS FROM NODE    100.00 TO NODE    101.00 IS CODE =  21
----------------------------------------------------------------------------
  >>>>>RATIONAL METHOD INITIAL SUBAREA ANALYSIS<<<<<
============================================================================
  *USER SPECIFIED(SUBAREA):
  USER-SPECIFIED RUNOFF COEFFICIENT = .3500
  S.C.S. CURVE NUMBER (AMC II) =   0
  INITIAL SUBAREA FLOW-LENGTH(FEET) =   108.00
  UPSTREAM ELEVATION(FEET) =   1015.00
  DOWNSTREAM ELEVATION(FEET) =   1000.00
  ELEVATION DIFFERENCE(FEET) =     15.00
  SUBAREA OVERLAND TIME OF FLOW(MIN.) =    6.267
  WARNING: INITIAL SUBAREA FLOW PATH LENGTH IS GREATER THAN
```

```
          THE MAXIMUM OVERLAND FLOW LENGTH =   100.00
          (Reference: Table 3-1B of Hydrology Manual)
          THE MAXIMUM OVERLAND FLOW LENGTH IS USED IN Tc CALCULATION!
   100 YEAR RAINFALL INTENSITY(INCH/HOUR) =  7.288
  SUBAREA RUNOFF(CFS) =      0.26
  TOTAL AREA(ACRES) =      0.10   TOTAL RUNOFF(CFS) =      0.26

****************************************************************************
  FLOW PROCESS FROM NODE    101.00 TO NODE    102.00 IS CODE =  51
----------------------------------------------------------------------------
  >>>>>COMPUTE TRAPEZOIDAL CHANNEL FLOW<<<<<
  >>>>>TRAVELTIME THRU SUBAREA (EXISTING ELEMENT)<<<<<
============================================================================
  ELEVATION DATA: UPSTREAM(FEET) =   1000.00  DOWNSTREAM(FEET) =    950.00
  CHANNEL LENGTH THRU SUBAREA(FEET) =   308.00   CHANNEL SLOPE =  0.1623
  CHANNEL BASE(FEET) =    3.00   "Z" FACTOR =   2.000
  MANNING'S FACTOR = 0.030   MAXIMUM DEPTH(FEET) =  10.00
   100 YEAR RAINFALL INTENSITY(INCH/HOUR) =  6.570
  *USER SPECIFIED(SUBAREA):
  USER-SPECIFIED RUNOFF COEFFICIENT = .3500
  S.C.S. CURVE NUMBER (AMC II) =   0
  TRAVEL TIME COMPUTED USING ESTIMATED FLOW(CFS) =       1.81
  TRAVEL TIME THRU SUBAREA BASED ON VELOCITY(FEET/SEC.) =   4.69
  AVERAGE FLOW DEPTH(FEET) =   0.12   TRAVEL TIME(MIN.) =   1.09
  Tc(MIN.) =    7.36
  SUBAREA AREA(ACRES) =     1.35       SUBAREA RUNOFF(CFS) =    3.10
  AREA-AVERAGE RUNOFF COEFFICIENT =  0.350
  TOTAL AREA(ACRES) =        1.5         PEAK FLOW RATE(CFS) =       3.33

  END OF SUBAREA CHANNEL FLOW HYDRAULICS:
  DEPTH(FEET) =  0.17   FLOW VELOCITY(FEET/SEC.) =   5.77
  LONGEST FLOWPATH FROM NODE    100.00 TO NODE    102.00 =     416.00 FEET.

****************************************************************************
  FLOW PROCESS FROM NODE    102.00 TO NODE    103.00 IS CODE =  51
----------------------------------------------------------------------------
  >>>>>COMPUTE TRAPEZOIDAL CHANNEL FLOW<<<<<
  >>>>>TRAVELTIME THRU SUBAREA (EXISTING ELEMENT)<<<<<
============================================================================
  ELEVATION DATA: UPSTREAM(FEET) =    950.00  DOWNSTREAM(FEET) =    863.00
  CHANNEL LENGTH THRU SUBAREA(FEET) =   387.00   CHANNEL SLOPE =  0.2248
  CHANNEL BASE(FEET) =    3.00   "Z" FACTOR =   2.000
  MANNING'S FACTOR = 0.030   MAXIMUM DEPTH(FEET) =  10.00
   100 YEAR RAINFALL INTENSITY(INCH/HOUR) =  6.128
  *USER SPECIFIED(SUBAREA):
  USER-SPECIFIED RUNOFF COEFFICIENT = .3500
  S.C.S. CURVE NUMBER (AMC II) =   0
  TRAVEL TIME COMPUTED USING ESTIMATED FLOW(CFS) =       5.78
  TRAVEL TIME THRU SUBAREA BASED ON VELOCITY(FEET/SEC.) =   7.70
  AVERAGE FLOW DEPTH(FEET) =   0.22   TRAVEL TIME(MIN.) =   0.84
  Tc(MIN.) =    8.20
  SUBAREA AREA(ACRES) =     2.28       SUBAREA RUNOFF(CFS) =    4.89
  AREA-AVERAGE RUNOFF COEFFICIENT =  0.350
  TOTAL AREA(ACRES) =        3.7         PEAK FLOW RATE(CFS) =       8.00

  END OF SUBAREA CHANNEL FLOW HYDRAULICS:
  DEPTH(FEET) =  0.26   FLOW VELOCITY(FEET/SEC.) =   8.58
  LONGEST FLOWPATH FROM NODE    100.00 TO NODE    103.00 =     803.00 FEET.

****************************************************************************
  FLOW PROCESS FROM NODE    103.00 TO NODE    104.00 IS CODE =  51
----------------------------------------------------------------------------
  >>>>>COMPUTE TRAPEZOIDAL CHANNEL FLOW<<<<<
```

```
  >>>>>TRAVELTIME THRU SUBAREA (EXISTING ELEMENT)<<<<<
================================================================================
  ELEVATION DATA: UPSTREAM(FEET) =    863.00  DOWNSTREAM(FEET) =    832.00
  CHANNEL LENGTH THRU SUBAREA(FEET) =   200.00   CHANNEL SLOPE =  0.1550
  CHANNEL BASE(FEET) =    3.00   "Z" FACTOR =   2.000
  MANNING'S FACTOR = 0.030   MAXIMUM DEPTH(FEET) =  10.00
   100 YEAR RAINFALL INTENSITY(INCH/HOUR) =  5.930
  *USER SPECIFIED(SUBAREA):
  USER-SPECIFIED RUNOFF COEFFICIENT = .3500
  S.C.S. CURVE NUMBER (AMC II) =   0
  TRAVEL TIME COMPUTED USING ESTIMATED FLOW(CFS) =       8.45
  TRAVEL TIME THRU SUBAREA BASED ON VELOCITY(FEET/SEC.) =   7.75
  AVERAGE FLOW DEPTH(FEET) =   0.30   TRAVEL TIME(MIN.) =   0.43
  Tc(MIN.) =    8.63
  SUBAREA AREA(ACRES) =     0.43       SUBAREA RUNOFF(CFS) =    0.89
  AREA-AVERAGE RUNOFF COEFFICIENT =  0.350
  TOTAL AREA(ACRES) =        4.2         PEAK FLOW RATE(CFS) =       8.63

  END OF SUBAREA CHANNEL FLOW HYDRAULICS:
  DEPTH(FEET) =  0.31   FLOW VELOCITY(FEET/SEC.) =   7.75
  LONGEST FLOWPATH FROM NODE    100.00 TO NODE    104.00 =    1003.00 FEET.

****************************************************************************
  FLOW PROCESS FROM NODE    104.00 TO NODE    104.00 IS CODE =   1
----------------------------------------------------------------------------
  >>>>>DESIGNATE INDEPENDENT STREAM FOR CONFLUENCE<<<<<
================================================================================
  TOTAL NUMBER OF STREAMS =  3
  CONFLUENCE VALUES USED FOR INDEPENDENT STREAM  1 ARE:
  TIME OF CONCENTRATION(MIN.) =    8.63
  RAINFALL INTENSITY(INCH/HR) =   5.93
  TOTAL STREAM AREA(ACRES) =     4.16
  PEAK FLOW RATE(CFS) AT CONFLUENCE =      8.63

****************************************************************************
  FLOW PROCESS FROM NODE    105.00 TO NODE    106.00 IS CODE =  21
----------------------------------------------------------------------------
  >>>>>RATIONAL METHOD INITIAL SUBAREA ANALYSIS<<<<<
================================================================================
  *USER SPECIFIED(SUBAREA):
  USER-SPECIFIED RUNOFF COEFFICIENT = .3500
  S.C.S. CURVE NUMBER (AMC II) =   0
  INITIAL SUBAREA FLOW-LENGTH(FEET) =   100.00
  UPSTREAM ELEVATION(FEET) =    975.00
  DOWNSTREAM ELEVATION(FEET) =    967.00
  ELEVATION DIFFERENCE(FEET) =      8.00
  SUBAREA OVERLAND TIME OF FLOW(MIN.) =    6.750
   100 YEAR RAINFALL INTENSITY(INCH/HOUR) =  6.947
  SUBAREA RUNOFF(CFS) =      0.24
  TOTAL AREA(ACRES) =      0.10   TOTAL RUNOFF(CFS) =      0.24

****************************************************************************
  FLOW PROCESS FROM NODE    106.00 TO NODE    107.00 IS CODE =  51
----------------------------------------------------------------------------
  >>>>>COMPUTE TRAPEZOIDAL CHANNEL FLOW<<<<<
  >>>>>TRAVELTIME THRU SUBAREA (EXISTING ELEMENT)<<<<<
================================================================================
  ELEVATION DATA: UPSTREAM(FEET) =    967.00  DOWNSTREAM(FEET) =    918.00
  CHANNEL LENGTH THRU SUBAREA(FEET) =   220.00   CHANNEL SLOPE =  0.2227
  CHANNEL BASE(FEET) =    3.00   "Z" FACTOR =   2.000
  MANNING'S FACTOR = 0.030   MAXIMUM DEPTH(FEET) =  10.00
   100 YEAR RAINFALL INTENSITY(INCH/HOUR) =  6.460
  *USER SPECIFIED(SUBAREA):
```

```
  USER-SPECIFIED RUNOFF COEFFICIENT = .3500
  S.C.S. CURVE NUMBER (AMC II) =   0
  TRAVEL TIME COMPUTED USING ESTIMATED FLOW(CFS) =       1.28
  TRAVEL TIME THRU SUBAREA BASED ON VELOCITY(FEET/SEC.) =   4.55
  AVERAGE FLOW DEPTH(FEET) =   0.09   TRAVEL TIME(MIN.) =   0.81
  Tc(MIN.) =    7.56
  SUBAREA AREA(ACRES) =     0.92       SUBAREA RUNOFF(CFS) =    2.08
  AREA-AVERAGE RUNOFF COEFFICIENT =  0.350
  TOTAL AREA(ACRES) =        1.0         PEAK FLOW RATE(CFS) =       2.31

  END OF SUBAREA CHANNEL FLOW HYDRAULICS:
  DEPTH(FEET) =  0.13   FLOW VELOCITY(FEET/SEC.) =   5.59
  LONGEST FLOWPATH FROM NODE    105.00 TO NODE    107.00 =     320.00 FEET.

****************************************************************************
  FLOW PROCESS FROM NODE    107.00 TO NODE    104.00 IS CODE =  51
----------------------------------------------------------------------------
  >>>>>COMPUTE TRAPEZOIDAL CHANNEL FLOW<<<<<
  >>>>>TRAVELTIME THRU SUBAREA (EXISTING ELEMENT)<<<<<
============================================================================
  ELEVATION DATA: UPSTREAM(FEET) =    918.00  DOWNSTREAM(FEET) =    832.00
  CHANNEL LENGTH THRU SUBAREA(FEET) =   385.00   CHANNEL SLOPE =  0.2234
  CHANNEL BASE(FEET) =    3.00   "Z" FACTOR =   2.000
  MANNING'S FACTOR = 0.030   MAXIMUM DEPTH(FEET) =  10.00
   100 YEAR RAINFALL INTENSITY(INCH/HOUR) =  5.992
  *USER SPECIFIED(SUBAREA):
  USER-SPECIFIED RUNOFF COEFFICIENT = .3500
  S.C.S. CURVE NUMBER (AMC II) =   0
  TRAVEL TIME COMPUTED USING ESTIMATED FLOW(CFS) =       3.96
  TRAVEL TIME THRU SUBAREA BASED ON VELOCITY(FEET/SEC.) =   6.86
  AVERAGE FLOW DEPTH(FEET) =   0.17   TRAVEL TIME(MIN.) =   0.94
  Tc(MIN.) =    8.49
  SUBAREA AREA(ACRES) =     1.58       SUBAREA RUNOFF(CFS) =    3.31
  AREA-AVERAGE RUNOFF COEFFICIENT =  0.350
  TOTAL AREA(ACRES) =        2.6         PEAK FLOW RATE(CFS) =       5.45

  END OF SUBAREA CHANNEL FLOW HYDRAULICS:
  DEPTH(FEET) =  0.21   FLOW VELOCITY(FEET/SEC.) =   7.56
  LONGEST FLOWPATH FROM NODE    105.00 TO NODE    104.00 =     705.00 FEET.

****************************************************************************
  FLOW PROCESS FROM NODE    104.00 TO NODE    104.00 IS CODE =   1
----------------------------------------------------------------------------
  >>>>>DESIGNATE INDEPENDENT STREAM FOR CONFLUENCE<<<<<
============================================================================
  TOTAL NUMBER OF STREAMS =  3
  CONFLUENCE VALUES USED FOR INDEPENDENT STREAM  2 ARE:
  TIME OF CONCENTRATION(MIN.) =    8.49
  RAINFALL INTENSITY(INCH/HR) =   5.99
  TOTAL STREAM AREA(ACRES) =     2.60
  PEAK FLOW RATE(CFS) AT CONFLUENCE =      5.45

****************************************************************************
  FLOW PROCESS FROM NODE    109.00 TO NODE    104.00 IS CODE =  21
----------------------------------------------------------------------------
  >>>>>RATIONAL METHOD INITIAL SUBAREA ANALYSIS<<<<<
============================================================================
  *USER SPECIFIED(SUBAREA):
  USER-SPECIFIED RUNOFF COEFFICIENT = .3500
  S.C.S. CURVE NUMBER (AMC II) =   0
  INITIAL SUBAREA FLOW-LENGTH(FEET) =   333.00
  UPSTREAM ELEVATION(FEET) =    896.00
  DOWNSTREAM ELEVATION(FEET) =    832.00
```

```
  ELEVATION DIFFERENCE(FEET) =     64.00
  SUBAREA OVERLAND TIME OF FLOW(MIN.) =    6.267
  WARNING: INITIAL SUBAREA FLOW PATH LENGTH IS GREATER THAN
           THE MAXIMUM OVERLAND FLOW LENGTH =   100.00
           (Reference: Table 3-1B of Hydrology Manual)
           THE MAXIMUM OVERLAND FLOW LENGTH IS USED IN Tc CALCULATION!
   100 YEAR RAINFALL INTENSITY(INCH/HOUR) =  7.288
  SUBAREA RUNOFF(CFS) =      2.45
  TOTAL AREA(ACRES) =      0.96   TOTAL RUNOFF(CFS) =      2.45

****************************************************************************
  FLOW PROCESS FROM NODE    104.00 TO NODE    104.00 IS CODE =   1
----------------------------------------------------------------------------
  >>>>>DESIGNATE INDEPENDENT STREAM FOR CONFLUENCE<<<<<
  >>>>>AND COMPUTE VARIOUS CONFLUENCED STREAM VALUES<<<<<
============================================================================
  TOTAL NUMBER OF STREAMS =  3
  CONFLUENCE VALUES USED FOR INDEPENDENT STREAM  3 ARE:
  TIME OF CONCENTRATION(MIN.) =    6.27
  RAINFALL INTENSITY(INCH/HR) =   7.29
  TOTAL STREAM AREA(ACRES) =     0.96
  PEAK FLOW RATE(CFS) AT CONFLUENCE =      2.45

  ** CONFLUENCE DATA **
  STREAM     RUNOFF       Tc      INTENSITY      AREA
  NUMBER      (CFS)     (MIN.)   (INCH/HOUR)    (ACRE)
      1        8.63     8.63        5.930          4.16
      2        5.45     8.49        5.992          2.60
      3        2.45     6.27        7.288          0.96

  RAINFALL INTENSITY AND TIME OF CONCENTRATION RATIO
  CONFLUENCE FORMULA USED FOR  3 STREAMS.

  ** PEAK FLOW RATE TABLE **
  STREAM     RUNOFF      Tc      INTENSITY
  NUMBER      (CFS)    (MIN.)   (INCH/HOUR)
      1       12.74     6.27       7.288
      2       15.96     8.49       5.992
      3       16.02     8.63       5.930

  COMPUTED CONFLUENCE ESTIMATES ARE AS FOLLOWS:
  PEAK FLOW RATE(CFS) =      16.02   Tc(MIN.) =    8.63
  TOTAL AREA(ACRES) =        7.7
  LONGEST FLOWPATH FROM NODE    100.00 TO NODE    104.00 =    1003.00 FEET.

****************************************************************************
  FLOW PROCESS FROM NODE    104.00 TO NODE    110.00 IS CODE =  51
----------------------------------------------------------------------------
  >>>>>COMPUTE TRAPEZOIDAL CHANNEL FLOW<<<<<
  >>>>>TRAVELTIME THRU SUBAREA (EXISTING ELEMENT)<<<<<
============================================================================
  ELEVATION DATA: UPSTREAM(FEET) =    832.00  DOWNSTREAM(FEET) =    816.00
  CHANNEL LENGTH THRU SUBAREA(FEET) =   151.00   CHANNEL SLOPE =  0.1060
  CHANNEL BASE(FEET) =    3.00   "Z" FACTOR =   2.000
  MANNING'S FACTOR = 0.030   MAXIMUM DEPTH(FEET) =  10.00
   100 YEAR RAINFALL INTENSITY(INCH/HOUR) =  5.802
  *USER SPECIFIED(SUBAREA):
  USER-SPECIFIED RUNOFF COEFFICIENT = .3500
  S.C.S. CURVE NUMBER (AMC II) =   0
  TRAVEL TIME COMPUTED USING ESTIMATED FLOW(CFS) =      17.01
  TRAVEL TIME THRU SUBAREA BASED ON VELOCITY(FEET/SEC.) =   8.49
  AVERAGE FLOW DEPTH(FEET) =   0.50   TRAVEL TIME(MIN.) =   0.30
  Tc(MIN.) =    8.93
```

```
  SUBAREA AREA(ACRES) =     0.97       SUBAREA RUNOFF(CFS) =    1.97
  AREA-AVERAGE RUNOFF COEFFICIENT =  0.350
  TOTAL AREA(ACRES) =        8.7         PEAK FLOW RATE(CFS) =      17.65

  END OF SUBAREA CHANNEL FLOW HYDRAULICS:
  DEPTH(FEET) =  0.51   FLOW VELOCITY(FEET/SEC.) =   8.64
  LONGEST FLOWPATH FROM NODE    100.00 TO NODE    110.00 =    1154.00 FEET.

****************************************************************************
  FLOW PROCESS FROM NODE    110.00 TO NODE    110.00 IS CODE =  10
----------------------------------------------------------------------------
  >>>>>MAIN-STREAM MEMORY COPIED ONTO MEMORY BANK # 1 <<<<<
============================================================================

****************************************************************************
  FLOW PROCESS FROM NODE    116.00 TO NODE    117.00 IS CODE =  21
----------------------------------------------------------------------------
  >>>>>RATIONAL METHOD INITIAL SUBAREA ANALYSIS<<<<<
============================================================================
  *USER SPECIFIED(SUBAREA):
  USER-SPECIFIED RUNOFF COEFFICIENT = .7100
  S.C.S. CURVE NUMBER (AMC II) =   0
  INITIAL SUBAREA FLOW-LENGTH(FEET) =    85.00
  UPSTREAM ELEVATION(FEET) =    882.00
  DOWNSTREAM ELEVATION(FEET) =    880.00
  ELEVATION DIFFERENCE(FEET) =      2.00
  SUBAREA OVERLAND TIME OF FLOW(MIN.) =    4.866
   100 YEAR RAINFALL INTENSITY(INCH/HOUR) =  8.431
  NOTE: RAINFALL INTENSITY IS BASED ON Tc = 5-MINUTE.
  SUBAREA RUNOFF(CFS) =      1.80
  TOTAL AREA(ACRES) =      0.30   TOTAL RUNOFF(CFS) =      1.80

****************************************************************************
  FLOW PROCESS FROM NODE    117.00 TO NODE    118.00 IS CODE =  62
----------------------------------------------------------------------------
  >>>>>COMPUTE STREET FLOW TRAVEL TIME THRU SUBAREA<<<<<
  >>>>>(STREET TABLE SECTION #  1 USED)<<<<<
============================================================================
  UPSTREAM ELEVATION(FEET) =  880.00  DOWNSTREAM ELEVATION(FEET) =  874.00
  STREET LENGTH(FEET) =   310.00   CURB HEIGHT(INCHES) =  4.0
  STREET HALFWIDTH(FEET) = 20.00

  DISTANCE FROM CROWN TO CROSSFALL GRADEBREAK(FEET) =   8.00
  INSIDE STREET CROSSFALL(DECIMAL) =  0.020
  OUTSIDE STREET CROSSFALL(DECIMAL)  =  0.020

  SPECIFIED NUMBER OF HALFSTREETS CARRYING RUNOFF =  1
  STREET PARKWAY CROSSFALL(DECIMAL)  =  0.020
  Manning's FRICTION FACTOR for Streetflow Section(curb-to-curb) =   0.0150
  Manning's FRICTION FACTOR for Back-of-Walk Flow Section =   0.0200

    **TRAVEL TIME COMPUTED USING ESTIMATED FLOW(CFS) =       8.16
    STREETFLOW MODEL RESULTS USING ESTIMATED FLOW:
    STREET FLOW DEPTH(FEET) =  0.31
    HALFSTREET FLOOD WIDTH(FEET) =   14.66
    AVERAGE FLOW VELOCITY(FEET/SEC.) =    3.80
    PRODUCT OF DEPTH&VELOCITY(FT*FT/SEC.) =    1.18
  STREET FLOW TRAVEL TIME(MIN.) =   1.36   Tc(MIN.) =    6.23
   100 YEAR RAINFALL INTENSITY(INCH/HOUR) =  7.318
  *USER SPECIFIED(SUBAREA):
  USER-SPECIFIED RUNOFF COEFFICIENT = .7100
  S.C.S. CURVE NUMBER (AMC II) =   0
  AREA-AVERAGE RUNOFF COEFFICIENT =  0.710
```

```
  SUBAREA AREA(ACRES) =    2.44      SUBAREA RUNOFF(CFS) =   12.68
  TOTAL AREA(ACRES) =        2.7        PEAK FLOW RATE(CFS) =      14.24

  END OF SUBAREA STREET FLOW HYDRAULICS:
  DEPTH(FEET) = 0.38   HALFSTREET FLOOD WIDTH(FEET) =  20.30
  FLOW VELOCITY(FEET/SEC.) =  4.31   DEPTH*VELOCITY(FT*FT/SEC.) =   1.63
  *NOTE: INITIAL SUBAREA NOMOGRAPH WITH SUBAREA PARAMETERS,
         AND L =  310.0 FT WITH ELEVATION-DROP =   6.0 FT, IS   14.6 CFS,
         WHICH EXCEEDS THE TOP-OF-CURB STREET CAPACITY AT NODE    118.00
  LONGEST FLOWPATH FROM NODE    116.00 TO NODE    118.00 =     395.00 FEET.

****************************************************************************
  FLOW PROCESS FROM NODE    118.00 TO NODE    119.00 IS CODE =  31
----------------------------------------------------------------------------
  >>>>>COMPUTE PIPE-FLOW TRAVEL TIME THRU SUBAREA<<<<<
  >>>>>USING COMPUTER-ESTIMATED PIPESIZE (NON-PRESSURE FLOW)<<<<<
============================================================================
  ELEVATION DATA: UPSTREAM(FEET) =   869.00  DOWNSTREAM(FEET) =   854.00
  FLOW LENGTH(FEET) =    75.00   MANNING'S N =  0.013
  DEPTH OF FLOW IN  12.0 INCH PIPE IS   9.3 INCHES
  PIPE-FLOW VELOCITY(FEET/SEC.) =  21.88
  ESTIMATED PIPE DIAMETER(INCH) =  12.00    NUMBER OF PIPES =   1
  PIPE-FLOW(CFS) =      14.24
  PIPE TRAVEL TIME(MIN.) =   0.06    Tc(MIN.) =    6.28
  LONGEST FLOWPATH FROM NODE    116.00 TO NODE    119.00 =     470.00 FEET.

****************************************************************************
  FLOW PROCESS FROM NODE    119.00 TO NODE    119.00 IS CODE =   1
----------------------------------------------------------------------------
  >>>>>DESIGNATE INDEPENDENT STREAM FOR CONFLUENCE<<<<<
============================================================================
  TOTAL NUMBER OF STREAMS =  2
  CONFLUENCE VALUES USED FOR INDEPENDENT STREAM  1 ARE:
  TIME OF CONCENTRATION(MIN.) =    6.28
  RAINFALL INTENSITY(INCH/HR) =   7.27
  TOTAL STREAM AREA(ACRES) =     2.74
  PEAK FLOW RATE(CFS) AT CONFLUENCE =     14.24

****************************************************************************
  FLOW PROCESS FROM NODE    119.10 TO NODE    119.00 IS CODE =  21
----------------------------------------------------------------------------
  >>>>>RATIONAL METHOD INITIAL SUBAREA ANALYSIS<<<<<
============================================================================
  *USER SPECIFIED(SUBAREA):
  USER-SPECIFIED RUNOFF COEFFICIENT = .3500
  S.C.S. CURVE NUMBER (AMC II) =   0
  INITIAL SUBAREA FLOW-LENGTH(FEET) =    75.00
  UPSTREAM ELEVATION(FEET) =    876.00
  DOWNSTREAM ELEVATION(FEET) =    854.00
  ELEVATION DIFFERENCE(FEET) =     22.00
  SUBAREA OVERLAND TIME OF FLOW(MIN.) =    5.427
  WARNING: THE MAXIMUM OVERLAND FLOW SLOPE, 10.%, IS USED IN Tc CALCULATION!
   100 YEAR RAINFALL INTENSITY(INCH/HOUR) =  7.997
  SUBAREA RUNOFF(CFS) =      1.01
  TOTAL AREA(ACRES) =      0.36   TOTAL RUNOFF(CFS) =      1.01

****************************************************************************
  FLOW PROCESS FROM NODE    119.00 TO NODE    119.00 IS CODE =   1
----------------------------------------------------------------------------
  >>>>>DESIGNATE INDEPENDENT STREAM FOR CONFLUENCE<<<<<
  >>>>>AND COMPUTE VARIOUS CONFLUENCED STREAM VALUES<<<<<
============================================================================
  TOTAL NUMBER OF STREAMS =  2
```

```
  CONFLUENCE VALUES USED FOR INDEPENDENT STREAM  2 ARE:
  TIME OF CONCENTRATION(MIN.) =    5.43
  RAINFALL INTENSITY(INCH/HR) =   8.00
  TOTAL STREAM AREA(ACRES) =     0.36
  PEAK FLOW RATE(CFS) AT CONFLUENCE =      1.01

  ** CONFLUENCE DATA **
  STREAM     RUNOFF       Tc      INTENSITY      AREA
  NUMBER      (CFS)     (MIN.)   (INCH/HOUR)    (ACRE)
      1       14.24     6.28        7.275          2.74
      2        1.01     5.43        7.997          0.36

  RAINFALL INTENSITY AND TIME OF CONCENTRATION RATIO
  CONFLUENCE FORMULA USED FOR  2 STREAMS.

  ** PEAK FLOW RATE TABLE **
  STREAM     RUNOFF      Tc      INTENSITY
  NUMBER      (CFS)    (MIN.)   (INCH/HOUR)
      1       13.30     5.43       7.997
      2       15.15     6.28       7.275

  COMPUTED CONFLUENCE ESTIMATES ARE AS FOLLOWS:
  PEAK FLOW RATE(CFS) =      15.15   Tc(MIN.) =    6.28
  TOTAL AREA(ACRES) =        3.1
  LONGEST FLOWPATH FROM NODE    116.00 TO NODE    119.00 =     470.00 FEET.

****************************************************************************
  FLOW PROCESS FROM NODE    119.00 TO NODE    120.00 IS CODE =  31
----------------------------------------------------------------------------
  >>>>>COMPUTE PIPE-FLOW TRAVEL TIME THRU SUBAREA<<<<<
  >>>>>USING COMPUTER-ESTIMATED PIPESIZE (NON-PRESSURE FLOW)<<<<<
============================================================================
  ELEVATION DATA: UPSTREAM(FEET) =   851.00  DOWNSTREAM(FEET) =   834.00
  FLOW LENGTH(FEET) =    80.00   MANNING'S N =  0.013
  DEPTH OF FLOW IN  12.0 INCH PIPE IS   9.6 INCHES
  PIPE-FLOW VELOCITY(FEET/SEC.) =  22.60
  ESTIMATED PIPE DIAMETER(INCH) =  12.00    NUMBER OF PIPES =   1
  PIPE-FLOW(CFS) =      15.15
  PIPE TRAVEL TIME(MIN.) =   0.06    Tc(MIN.) =    6.34
  LONGEST FLOWPATH FROM NODE    116.00 TO NODE    120.00 =     550.00 FEET.

****************************************************************************
  FLOW PROCESS FROM NODE    120.00 TO NODE    110.00 IS CODE =  51
----------------------------------------------------------------------------
  >>>>>COMPUTE TRAPEZOIDAL CHANNEL FLOW<<<<<
  >>>>>TRAVELTIME THRU SUBAREA (EXISTING ELEMENT)<<<<<
============================================================================
  ELEVATION DATA: UPSTREAM(FEET) =    834.00  DOWNSTREAM(FEET) =    816.00
  CHANNEL LENGTH THRU SUBAREA(FEET) =   145.00   CHANNEL SLOPE =  0.1241
  CHANNEL BASE(FEET) =    3.00   "Z" FACTOR =   2.000
  MANNING'S FACTOR = 0.030   MAXIMUM DEPTH(FEET) =  10.00
   100 YEAR RAINFALL INTENSITY(INCH/HOUR) =  7.036
  *USER SPECIFIED(SUBAREA):
  USER-SPECIFIED RUNOFF COEFFICIENT = .3500
  S.C.S. CURVE NUMBER (AMC II) =   0
  TRAVEL TIME COMPUTED USING ESTIMATED FLOW(CFS) =      15.85
  TRAVEL TIME THRU SUBAREA BASED ON VELOCITY(FEET/SEC.) =   8.78
  AVERAGE FLOW DEPTH(FEET) =   0.46   TRAVEL TIME(MIN.) =   0.28
  Tc(MIN.) =    6.62
  SUBAREA AREA(ACRES) =     0.57       SUBAREA RUNOFF(CFS) =    1.40
  AREA-AVERAGE RUNOFF COEFFICIENT =  0.619
  TOTAL AREA(ACRES) =        3.7         PEAK FLOW RATE(CFS) =      15.98
```

```
  END OF SUBAREA CHANNEL FLOW HYDRAULICS:
  DEPTH(FEET) =  0.46   FLOW VELOCITY(FEET/SEC.) =   8.80
  LONGEST FLOWPATH FROM NODE    116.00 TO NODE    110.00 =     695.00 FEET.

****************************************************************************
  FLOW PROCESS FROM NODE    110.00 TO NODE    110.00 IS CODE =  11
----------------------------------------------------------------------------
  >>>>>CONFLUENCE MEMORY BANK # 1 WITH THE MAIN-STREAM MEMORY<<<<<
============================================================================

  ** MAIN STREAM CONFLUENCE DATA **
  STREAM     RUNOFF      Tc      INTENSITY     AREA
  NUMBER      (CFS)    (MIN.)   (INCH/HOUR)   (ACRE)
      1       15.98     6.62       7.036        3.67
  LONGEST FLOWPATH FROM NODE    116.00 TO NODE    110.00 =     695.00 FEET.

  ** MEMORY BANK #  1 CONFLUENCE DATA **
  STREAM     RUNOFF      Tc      INTENSITY     AREA
  NUMBER      (CFS)    (MIN.)   (INCH/HOUR)   (ACRE)
      1       17.65     8.93       5.802        8.69
  LONGEST FLOWPATH FROM NODE    100.00 TO NODE    110.00 =    1154.00 FEET.

  ** PEAK FLOW RATE TABLE **
  STREAM    RUNOFF       Tc      INTENSITY
  NUMBER     (CFS)     (MIN.)   (INCH/HOUR)
      1      29.06       6.62        7.036
      2      30.82       8.93        5.802

  COMPUTED CONFLUENCE ESTIMATES ARE AS FOLLOWS:
  PEAK FLOW RATE(CFS) =      30.82   Tc(MIN.) =    8.93
  TOTAL AREA(ACRES) =       12.4

****************************************************************************
  FLOW PROCESS FROM NODE    110.00 TO NODE    110.00 IS CODE =  12
----------------------------------------------------------------------------
  >>>>>CLEAR MEMORY BANK # 1 <<<<<
============================================================================

****************************************************************************
  FLOW PROCESS FROM NODE    110.00 TO NODE    111.00 IS CODE =  51
----------------------------------------------------------------------------
  >>>>>COMPUTE TRAPEZOIDAL CHANNEL FLOW<<<<<
  >>>>>TRAVELTIME THRU SUBAREA (EXISTING ELEMENT)<<<<<
============================================================================
  ELEVATION DATA: UPSTREAM(FEET) =    816.00  DOWNSTREAM(FEET) =    786.00
  CHANNEL LENGTH THRU SUBAREA(FEET) =   316.00   CHANNEL SLOPE =  0.0949
  CHANNEL BASE(FEET) =    3.00   "Z" FACTOR =   2.000
  MANNING'S FACTOR = 0.030   MAXIMUM DEPTH(FEET) =  10.00
   100 YEAR RAINFALL INTENSITY(INCH/HOUR) =  5.589
  *USER SPECIFIED(SUBAREA):
  USER-SPECIFIED RUNOFF COEFFICIENT = .3500
  S.C.S. CURVE NUMBER (AMC II) =   0
  TRAVEL TIME COMPUTED USING ESTIMATED FLOW(CFS) =      32.18
  TRAVEL TIME THRU SUBAREA BASED ON VELOCITY(FEET/SEC.) =   9.89
  AVERAGE FLOW DEPTH(FEET) =   0.73   TRAVEL TIME(MIN.) =   0.53
  Tc(MIN.) =    9.46
  SUBAREA AREA(ACRES) =     1.39       SUBAREA RUNOFF(CFS) =    2.72
  AREA-AVERAGE RUNOFF COEFFICIENT =  0.422
  TOTAL AREA(ACRES) =       13.8         PEAK FLOW RATE(CFS) =      32.41

  END OF SUBAREA CHANNEL FLOW HYDRAULICS:
  DEPTH(FEET) =  0.74   FLOW VELOCITY(FEET/SEC.) =   9.86
  LONGEST FLOWPATH FROM NODE    100.00 TO NODE    111.00 =    1470.00 FEET.
```

```
****************************************************************************
  FLOW PROCESS FROM NODE    111.00 TO NODE    111.00 IS CODE =   1
----------------------------------------------------------------------------
  >>>>>DESIGNATE INDEPENDENT STREAM FOR CONFLUENCE<<<<<
============================================================================
  TOTAL NUMBER OF STREAMS =  2
  CONFLUENCE VALUES USED FOR INDEPENDENT STREAM  1 ARE:
  TIME OF CONCENTRATION(MIN.) =    9.46
  RAINFALL INTENSITY(INCH/HR) =   5.59
  TOTAL STREAM AREA(ACRES) =    13.75
  PEAK FLOW RATE(CFS) AT CONFLUENCE =     32.41

****************************************************************************
  FLOW PROCESS FROM NODE    112.00 TO NODE    113.00 IS CODE =  21
----------------------------------------------------------------------------
  >>>>>RATIONAL METHOD INITIAL SUBAREA ANALYSIS<<<<<
============================================================================
  *USER SPECIFIED(SUBAREA):
  USER-SPECIFIED RUNOFF COEFFICIENT = .3500
  S.C.S. CURVE NUMBER (AMC II) =   0
  INITIAL SUBAREA FLOW-LENGTH(FEET) =   128.00
  UPSTREAM ELEVATION(FEET) =    975.00
  DOWNSTREAM ELEVATION(FEET) =    950.00
  ELEVATION DIFFERENCE(FEET) =     25.00
  SUBAREA OVERLAND TIME OF FLOW(MIN.) =    6.267
  WARNING: INITIAL SUBAREA FLOW PATH LENGTH IS GREATER THAN
           THE MAXIMUM OVERLAND FLOW LENGTH =   100.00
           (Reference: Table 3-1B of Hydrology Manual)
           THE MAXIMUM OVERLAND FLOW LENGTH IS USED IN Tc CALCULATION!
   100 YEAR RAINFALL INTENSITY(INCH/HOUR) =  7.288
  SUBAREA RUNOFF(CFS) =      0.28
  TOTAL AREA(ACRES) =      0.11   TOTAL RUNOFF(CFS) =      0.28

****************************************************************************
  FLOW PROCESS FROM NODE    113.00 TO NODE    114.00 IS CODE =  51
----------------------------------------------------------------------------
  >>>>>COMPUTE TRAPEZOIDAL CHANNEL FLOW<<<<<
  >>>>>TRAVELTIME THRU SUBAREA (EXISTING ELEMENT)<<<<<
============================================================================
  ELEVATION DATA: UPSTREAM(FEET) =    950.00  DOWNSTREAM(FEET) =    875.00
  CHANNEL LENGTH THRU SUBAREA(FEET) =   395.00   CHANNEL SLOPE =  0.1899
  CHANNEL BASE(FEET) =    3.00   "Z" FACTOR =   2.000
  MANNING'S FACTOR = 0.030   MAXIMUM DEPTH(FEET) =  10.00
   100 YEAR RAINFALL INTENSITY(INCH/HOUR) =  6.398
  *USER SPECIFIED(SUBAREA):
  USER-SPECIFIED RUNOFF COEFFICIENT = .3500
  S.C.S. CURVE NUMBER (AMC II) =   0
  TRAVEL TIME COMPUTED USING ESTIMATED FLOW(CFS) =       1.69
  TRAVEL TIME THRU SUBAREA BASED ON VELOCITY(FEET/SEC.) =   4.70
  AVERAGE FLOW DEPTH(FEET) =   0.11   TRAVEL TIME(MIN.) =   1.40
  Tc(MIN.) =    7.67
  SUBAREA AREA(ACRES) =     1.25       SUBAREA RUNOFF(CFS) =    2.80
  AREA-AVERAGE RUNOFF COEFFICIENT =  0.350
  TOTAL AREA(ACRES) =        1.4         PEAK FLOW RATE(CFS) =       3.05

  END OF SUBAREA CHANNEL FLOW HYDRAULICS:
  DEPTH(FEET) =  0.16   FLOW VELOCITY(FEET/SEC.) =   5.84
  LONGEST FLOWPATH FROM NODE    112.00 TO NODE    114.00 =     523.00 FEET.

****************************************************************************
  FLOW PROCESS FROM NODE    114.00 TO NODE    111.00 IS CODE =  51
----------------------------------------------------------------------------
```

```
  >>>>>COMPUTE TRAPEZOIDAL CHANNEL FLOW<<<<<
  >>>>>TRAVELTIME THRU SUBAREA (EXISTING ELEMENT)<<<<<
================================================================================
  ELEVATION DATA: UPSTREAM(FEET) =    875.00  DOWNSTREAM(FEET) =    786.00
  CHANNEL LENGTH THRU SUBAREA(FEET) =   668.00   CHANNEL SLOPE =  0.1332
  CHANNEL BASE(FEET) =    3.00   "Z" FACTOR =   2.000
  MANNING'S FACTOR = 0.030   MAXIMUM DEPTH(FEET) =  10.00
   100 YEAR RAINFALL INTENSITY(INCH/HOUR) =  5.612
  *USER SPECIFIED(SUBAREA):
  USER-SPECIFIED RUNOFF COEFFICIENT = .3500
  S.C.S. CURVE NUMBER (AMC II) =   0
  TRAVEL TIME COMPUTED USING ESTIMATED FLOW(CFS) =       5.76
  TRAVEL TIME THRU SUBAREA BASED ON VELOCITY(FEET/SEC.) =   6.44
  AVERAGE FLOW DEPTH(FEET) =   0.25   TRAVEL TIME(MIN.) =   1.73
  Tc(MIN.) =    9.40
  SUBAREA AREA(ACRES) =     2.75       SUBAREA RUNOFF(CFS) =    5.40
  AREA-AVERAGE RUNOFF COEFFICIENT =  0.350
  TOTAL AREA(ACRES) =        4.1         PEAK FLOW RATE(CFS) =       8.07

  END OF SUBAREA CHANNEL FLOW HYDRAULICS:
  DEPTH(FEET) =  0.31   FLOW VELOCITY(FEET/SEC.) =   7.25
  LONGEST FLOWPATH FROM NODE    112.00 TO NODE    111.00 =    1191.00 FEET.

****************************************************************************
  FLOW PROCESS FROM NODE    111.00 TO NODE    111.00 IS CODE =   1
----------------------------------------------------------------------------
  >>>>>DESIGNATE INDEPENDENT STREAM FOR CONFLUENCE<<<<<
  >>>>>AND COMPUTE VARIOUS CONFLUENCED STREAM VALUES<<<<<
================================================================================
  TOTAL NUMBER OF STREAMS =  2
  CONFLUENCE VALUES USED FOR INDEPENDENT STREAM  2 ARE:
  TIME OF CONCENTRATION(MIN.) =    9.40
  RAINFALL INTENSITY(INCH/HR) =   5.61
  TOTAL STREAM AREA(ACRES) =     4.11
  PEAK FLOW RATE(CFS) AT CONFLUENCE =      8.07

  ** CONFLUENCE DATA **
  STREAM     RUNOFF       Tc      INTENSITY      AREA
  NUMBER      (CFS)     (MIN.)   (INCH/HOUR)    (ACRE)
      1       32.41     9.46        5.589         13.75
      2        8.07     9.40        5.612          4.11

  RAINFALL INTENSITY AND TIME OF CONCENTRATION RATIO
  CONFLUENCE FORMULA USED FOR  2 STREAMS.

  ** PEAK FLOW RATE TABLE **
  STREAM     RUNOFF      Tc      INTENSITY
  NUMBER      (CFS)    (MIN.)   (INCH/HOUR)
      1       40.28     9.40       5.612
      2       40.45     9.46       5.589

  COMPUTED CONFLUENCE ESTIMATES ARE AS FOLLOWS:
  PEAK FLOW RATE(CFS) =      40.45   Tc(MIN.) =    9.46
  TOTAL AREA(ACRES) =       17.9
  LONGEST FLOWPATH FROM NODE    100.00 TO NODE    111.00 =    1470.00 FEET.

****************************************************************************
  FLOW PROCESS FROM NODE    111.00 TO NODE    115.00 IS CODE =  51
----------------------------------------------------------------------------
  >>>>>COMPUTE TRAPEZOIDAL CHANNEL FLOW<<<<<
  >>>>>TRAVELTIME THRU SUBAREA (EXISTING ELEMENT)<<<<<
================================================================================
  ELEVATION DATA: UPSTREAM(FEET) =    786.00  DOWNSTREAM(FEET) =    775.00
```

```
  CHANNEL LENGTH THRU SUBAREA(FEET) =   255.00   CHANNEL SLOPE =  0.0431
  CHANNEL BASE(FEET) =    3.00   "Z" FACTOR =   2.000
  MANNING'S FACTOR = 0.030   MAXIMUM DEPTH(FEET) =  10.00
   100 YEAR RAINFALL INTENSITY(INCH/HOUR) =  5.395
  *USER SPECIFIED(SUBAREA):
  USER-SPECIFIED RUNOFF COEFFICIENT = .3500
  S.C.S. CURVE NUMBER (AMC II) =   0
  TRAVEL TIME COMPUTED USING ESTIMATED FLOW(CFS) =      41.26
  TRAVEL TIME THRU SUBAREA BASED ON VELOCITY(FEET/SEC.) =   7.97
  AVERAGE FLOW DEPTH(FEET) =   1.03   TRAVEL TIME(MIN.) =   0.53
  Tc(MIN.) =    9.99
  SUBAREA AREA(ACRES) =     0.86       SUBAREA RUNOFF(CFS) =    1.62
  AREA-AVERAGE RUNOFF COEFFICIENT =  0.403
  TOTAL AREA(ACRES) =       18.7         PEAK FLOW RATE(CFS) =      40.67

  END OF SUBAREA CHANNEL FLOW HYDRAULICS:
  DEPTH(FEET) =  1.02   FLOW VELOCITY(FEET/SEC.) =   7.94
  LONGEST FLOWPATH FROM NODE    100.00 TO NODE    115.00 =    1725.00 FEET.

****************************************************************************
  FLOW PROCESS FROM NODE    115.00 TO NODE    115.00 IS CODE =  10
----------------------------------------------------------------------------
  >>>>>MAIN-STREAM MEMORY COPIED ONTO MEMORY BANK # 1 <<<<<
============================================================================

****************************************************************************
  FLOW PROCESS FROM NODE    125.00 TO NODE    122.00 IS CODE =  21
----------------------------------------------------------------------------
  >>>>>RATIONAL METHOD INITIAL SUBAREA ANALYSIS<<<<<
============================================================================
  *USER SPECIFIED(SUBAREA):
  USER-SPECIFIED RUNOFF COEFFICIENT = .3500
  S.C.S. CURVE NUMBER (AMC II) =   0
  INITIAL SUBAREA FLOW-LENGTH(FEET) =   375.00
  UPSTREAM ELEVATION(FEET) =    880.00
  DOWNSTREAM ELEVATION(FEET) =    806.00
  ELEVATION DIFFERENCE(FEET) =     74.00
  SUBAREA OVERLAND TIME OF FLOW(MIN.) =    6.267
  WARNING: INITIAL SUBAREA FLOW PATH LENGTH IS GREATER THAN
           THE MAXIMUM OVERLAND FLOW LENGTH =   100.00
           (Reference: Table 3-1B of Hydrology Manual)
           THE MAXIMUM OVERLAND FLOW LENGTH IS USED IN Tc CALCULATION!
   100 YEAR RAINFALL INTENSITY(INCH/HOUR) =  7.288
  SUBAREA RUNOFF(CFS) =      1.96
  TOTAL AREA(ACRES) =      0.77   TOTAL RUNOFF(CFS) =      1.96

****************************************************************************
  FLOW PROCESS FROM NODE    122.00 TO NODE    122.00 IS CODE =   1
----------------------------------------------------------------------------
  >>>>>DESIGNATE INDEPENDENT STREAM FOR CONFLUENCE<<<<<
============================================================================
  TOTAL NUMBER OF STREAMS =  3
  CONFLUENCE VALUES USED FOR INDEPENDENT STREAM  1 ARE:
  TIME OF CONCENTRATION(MIN.) =    6.27
  RAINFALL INTENSITY(INCH/HR) =   7.29
  TOTAL STREAM AREA(ACRES) =     0.77
  PEAK FLOW RATE(CFS) AT CONFLUENCE =      1.96

****************************************************************************
  FLOW PROCESS FROM NODE    121.00 TO NODE    122.00 IS CODE =  21
----------------------------------------------------------------------------
  >>>>>RATIONAL METHOD INITIAL SUBAREA ANALYSIS<<<<<
============================================================================
```

```
  *USER SPECIFIED(SUBAREA):
  USER-SPECIFIED RUNOFF COEFFICIENT = .3500
  S.C.S. CURVE NUMBER (AMC II) =   0
  INITIAL SUBAREA FLOW-LENGTH(FEET) =   500.00
  UPSTREAM ELEVATION(FEET) =    869.00
  DOWNSTREAM ELEVATION(FEET) =    806.00
  ELEVATION DIFFERENCE(FEET) =     63.00
  SUBAREA OVERLAND TIME OF FLOW(MIN.) =    6.267
  WARNING: INITIAL SUBAREA FLOW PATH LENGTH IS GREATER THAN
           THE MAXIMUM OVERLAND FLOW LENGTH =   100.00
           (Reference: Table 3-1B of Hydrology Manual)
           THE MAXIMUM OVERLAND FLOW LENGTH IS USED IN Tc CALCULATION!
   100 YEAR RAINFALL INTENSITY(INCH/HOUR) =  7.288
  SUBAREA RUNOFF(CFS) =      3.42
  TOTAL AREA(ACRES) =      1.34   TOTAL RUNOFF(CFS) =      3.42

****************************************************************************
  FLOW PROCESS FROM NODE    122.00 TO NODE    122.00 IS CODE =   1
----------------------------------------------------------------------------
  >>>>>DESIGNATE INDEPENDENT STREAM FOR CONFLUENCE<<<<<
============================================================================
  TOTAL NUMBER OF STREAMS =  3
  CONFLUENCE VALUES USED FOR INDEPENDENT STREAM  2 ARE:
  TIME OF CONCENTRATION(MIN.) =    6.27
  RAINFALL INTENSITY(INCH/HR) =   7.29
  TOTAL STREAM AREA(ACRES) =     1.34
  PEAK FLOW RATE(CFS) AT CONFLUENCE =      3.42

****************************************************************************
  FLOW PROCESS FROM NODE    123.00 TO NODE    124.00 IS CODE =  21
----------------------------------------------------------------------------
  >>>>>RATIONAL METHOD INITIAL SUBAREA ANALYSIS<<<<<
============================================================================
  *USER SPECIFIED(SUBAREA):
  USER-SPECIFIED RUNOFF COEFFICIENT = .3500
  S.C.S. CURVE NUMBER (AMC II) =   0
  INITIAL SUBAREA FLOW-LENGTH(FEET) =    87.00
  UPSTREAM ELEVATION(FEET) =    847.00
  DOWNSTREAM ELEVATION(FEET) =    831.00
  ELEVATION DIFFERENCE(FEET) =     16.00
  SUBAREA OVERLAND TIME OF FLOW(MIN.) =    5.845
  WARNING: THE MAXIMUM OVERLAND FLOW SLOPE, 10.%, IS USED IN Tc CALCULATION!
   100 YEAR RAINFALL INTENSITY(INCH/HOUR) =  7.623
  SUBAREA RUNOFF(CFS) =      0.27
  TOTAL AREA(ACRES) =      0.10   TOTAL RUNOFF(CFS) =      0.27

****************************************************************************
  FLOW PROCESS FROM NODE    124.00 TO NODE    122.00 IS CODE =  51
----------------------------------------------------------------------------
  >>>>>COMPUTE TRAPEZOIDAL CHANNEL FLOW<<<<<
  >>>>>TRAVELTIME THRU SUBAREA (EXISTING ELEMENT)<<<<<
============================================================================
  ELEVATION DATA: UPSTREAM(FEET) =    831.00  DOWNSTREAM(FEET) =    806.00
  CHANNEL LENGTH THRU SUBAREA(FEET) =   275.00   CHANNEL SLOPE =  0.0909
  CHANNEL BASE(FEET) =    3.00   "Z" FACTOR =   2.000
  MANNING'S FACTOR = 0.030   MAXIMUM DEPTH(FEET) =  10.00
   100 YEAR RAINFALL INTENSITY(INCH/HOUR) =  6.513
  *USER SPECIFIED(SUBAREA):
  USER-SPECIFIED RUNOFF COEFFICIENT = .3500
  S.C.S. CURVE NUMBER (AMC II) =   0
  TRAVEL TIME COMPUTED USING ESTIMATED FLOW(CFS) =       0.85
  TRAVEL TIME THRU SUBAREA BASED ON VELOCITY(FEET/SEC.) =   2.84
  AVERAGE FLOW DEPTH(FEET) =   0.09   TRAVEL TIME(MIN.) =   1.61
```

```
  Tc(MIN.) =    7.46
  SUBAREA AREA(ACRES) =     0.51       SUBAREA RUNOFF(CFS) =    1.16
  AREA-AVERAGE RUNOFF COEFFICIENT =  0.350
  TOTAL AREA(ACRES) =        0.6         PEAK FLOW RATE(CFS) =       1.39

  END OF SUBAREA CHANNEL FLOW HYDRAULICS:
  DEPTH(FEET) =  0.12   FLOW VELOCITY(FEET/SEC.) =   3.43
  LONGEST FLOWPATH FROM NODE    123.00 TO NODE    122.00 =     362.00 FEET.

****************************************************************************
  FLOW PROCESS FROM NODE    122.00 TO NODE    122.00 IS CODE =   1
----------------------------------------------------------------------------
  >>>>>DESIGNATE INDEPENDENT STREAM FOR CONFLUENCE<<<<<
  >>>>>AND COMPUTE VARIOUS CONFLUENCED STREAM VALUES<<<<<
============================================================================
  TOTAL NUMBER OF STREAMS =  3
  CONFLUENCE VALUES USED FOR INDEPENDENT STREAM  3 ARE:
  TIME OF CONCENTRATION(MIN.) =    7.46
  RAINFALL INTENSITY(INCH/HR) =   6.51
  TOTAL STREAM AREA(ACRES) =     0.61
  PEAK FLOW RATE(CFS) AT CONFLUENCE =      1.39

  ** CONFLUENCE DATA **
  STREAM     RUNOFF       Tc      INTENSITY      AREA
  NUMBER      (CFS)     (MIN.)   (INCH/HOUR)    (ACRE)
      1        1.96     6.27        7.288          0.77
      2        3.42     6.27        7.288          1.34
      3        1.39     7.46        6.513          0.61

  RAINFALL INTENSITY AND TIME OF CONCENTRATION RATIO
  CONFLUENCE FORMULA USED FOR  3 STREAMS.

  ** PEAK FLOW RATE TABLE **
  STREAM     RUNOFF      Tc      INTENSITY
  NUMBER      (CFS)    (MIN.)   (INCH/HOUR)
      1        6.55     6.27       7.288
      2        6.55     6.27       7.288
      3        6.20     7.46       6.513

  COMPUTED CONFLUENCE ESTIMATES ARE AS FOLLOWS:
  PEAK FLOW RATE(CFS) =       6.55   Tc(MIN.) =    6.27
  TOTAL AREA(ACRES) =        2.7
  LONGEST FLOWPATH FROM NODE    121.00 TO NODE    122.00 =     500.00 FEET.

****************************************************************************
  FLOW PROCESS FROM NODE    122.00 TO NODE    129.00 IS CODE =  51
----------------------------------------------------------------------------
  >>>>>COMPUTE TRAPEZOIDAL CHANNEL FLOW<<<<<
  >>>>>TRAVELTIME THRU SUBAREA (EXISTING ELEMENT)<<<<<
============================================================================
  ELEVATION DATA: UPSTREAM(FEET) =    806.00  DOWNSTREAM(FEET) =    786.00
  CHANNEL LENGTH THRU SUBAREA(FEET) =   250.00   CHANNEL SLOPE =  0.0800
  CHANNEL BASE(FEET) =    3.00   "Z" FACTOR =   2.000
  MANNING'S FACTOR = 0.030   MAXIMUM DEPTH(FEET) =  10.00
   100 YEAR RAINFALL INTENSITY(INCH/HOUR) =  6.796
  *USER SPECIFIED(SUBAREA):
  USER-SPECIFIED RUNOFF COEFFICIENT = .3500
  S.C.S. CURVE NUMBER (AMC II) =   0
  TRAVEL TIME COMPUTED USING ESTIMATED FLOW(CFS) =       7.03
  TRAVEL TIME THRU SUBAREA BASED ON VELOCITY(FEET/SEC.) =   5.80
  AVERAGE FLOW DEPTH(FEET) =   0.33   TRAVEL TIME(MIN.) =   0.72
  Tc(MIN.) =    6.99
  SUBAREA AREA(ACRES) =     0.40       SUBAREA RUNOFF(CFS) =    0.95
```

```
  AREA-AVERAGE RUNOFF COEFFICIENT =  0.350
  TOTAL AREA(ACRES) =        3.1         PEAK FLOW RATE(CFS) =       7.42

  END OF SUBAREA CHANNEL FLOW HYDRAULICS:
  DEPTH(FEET) =  0.34   FLOW VELOCITY(FEET/SEC.) =   5.96
  LONGEST FLOWPATH FROM NODE    121.00 TO NODE    129.00 =     750.00 FEET.

****************************************************************************
  FLOW PROCESS FROM NODE    129.00 TO NODE    129.00 IS CODE =   1
----------------------------------------------------------------------------
  >>>>>DESIGNATE INDEPENDENT STREAM FOR CONFLUENCE<<<<<
============================================================================
  TOTAL NUMBER OF STREAMS =  2
  CONFLUENCE VALUES USED FOR INDEPENDENT STREAM  1 ARE:
  TIME OF CONCENTRATION(MIN.) =    6.99
  RAINFALL INTENSITY(INCH/HR) =   6.80
  TOTAL STREAM AREA(ACRES) =     3.12
  PEAK FLOW RATE(CFS) AT CONFLUENCE =      7.42

****************************************************************************
  FLOW PROCESS FROM NODE    127.00 TO NODE    128.00 IS CODE =  21
----------------------------------------------------------------------------
  >>>>>RATIONAL METHOD INITIAL SUBAREA ANALYSIS<<<<<
============================================================================
  *USER SPECIFIED(SUBAREA):
  USER-SPECIFIED RUNOFF COEFFICIENT = .3500
  S.C.S. CURVE NUMBER (AMC II) =   0
  INITIAL SUBAREA FLOW-LENGTH(FEET) =   315.00
  UPSTREAM ELEVATION(FEET) =    876.00
  DOWNSTREAM ELEVATION(FEET) =    804.00
  ELEVATION DIFFERENCE(FEET) =     72.00
  SUBAREA OVERLAND TIME OF FLOW(MIN.) =    6.267
  WARNING: INITIAL SUBAREA FLOW PATH LENGTH IS GREATER THAN
           THE MAXIMUM OVERLAND FLOW LENGTH =   100.00
           (Reference: Table 3-1B of Hydrology Manual)
           THE MAXIMUM OVERLAND FLOW LENGTH IS USED IN Tc CALCULATION!
   100 YEAR RAINFALL INTENSITY(INCH/HOUR) =  7.288
  SUBAREA RUNOFF(CFS) =      3.16
  TOTAL AREA(ACRES) =      1.24   TOTAL RUNOFF(CFS) =      3.16

****************************************************************************
  FLOW PROCESS FROM NODE    128.00 TO NODE    129.00 IS CODE =  51
----------------------------------------------------------------------------
  >>>>>COMPUTE TRAPEZOIDAL CHANNEL FLOW<<<<<
  >>>>>TRAVELTIME THRU SUBAREA (EXISTING ELEMENT)<<<<<
============================================================================
  ELEVATION DATA: UPSTREAM(FEET) =    804.00  DOWNSTREAM(FEET) =    786.00
  CHANNEL LENGTH THRU SUBAREA(FEET) =   185.00   CHANNEL SLOPE =  0.0973
  CHANNEL BASE(FEET) =    3.00   "Z" FACTOR =   2.000
  MANNING'S FACTOR = 0.030   MAXIMUM DEPTH(FEET) =  10.00
   100 YEAR RAINFALL INTENSITY(INCH/HOUR) =  6.864
  *USER SPECIFIED(SUBAREA):
  USER-SPECIFIED RUNOFF COEFFICIENT = .3500
  S.C.S. CURVE NUMBER (AMC II) =   0
  TRAVEL TIME COMPUTED USING ESTIMATED FLOW(CFS) =       3.64
  TRAVEL TIME THRU SUBAREA BASED ON VELOCITY(FEET/SEC.) =   5.05
  AVERAGE FLOW DEPTH(FEET) =   0.21   TRAVEL TIME(MIN.) =   0.61
  Tc(MIN.) =    6.88
  SUBAREA AREA(ACRES) =     0.40       SUBAREA RUNOFF(CFS) =    0.96
  AREA-AVERAGE RUNOFF COEFFICIENT =  0.350
  TOTAL AREA(ACRES) =        1.6         PEAK FLOW RATE(CFS) =       3.94

  END OF SUBAREA CHANNEL FLOW HYDRAULICS:
```

```
  DEPTH(FEET) =  0.22   FLOW VELOCITY(FEET/SEC.) =   5.10
  LONGEST FLOWPATH FROM NODE    127.00 TO NODE    129.00 =     500.00 FEET.

****************************************************************************
  FLOW PROCESS FROM NODE    129.00 TO NODE    129.00 IS CODE =   1
----------------------------------------------------------------------------
  >>>>>DESIGNATE INDEPENDENT STREAM FOR CONFLUENCE<<<<<
  >>>>>AND COMPUTE VARIOUS CONFLUENCED STREAM VALUES<<<<<
============================================================================
  TOTAL NUMBER OF STREAMS =  2
  CONFLUENCE VALUES USED FOR INDEPENDENT STREAM  2 ARE:
  TIME OF CONCENTRATION(MIN.) =    6.88
  RAINFALL INTENSITY(INCH/HR) =   6.86
  TOTAL STREAM AREA(ACRES) =     1.64
  PEAK FLOW RATE(CFS) AT CONFLUENCE =      3.94

  ** CONFLUENCE DATA **
  STREAM     RUNOFF       Tc      INTENSITY      AREA
  NUMBER      (CFS)     (MIN.)   (INCH/HOUR)    (ACRE)
      1        7.42     6.99        6.796          3.12
      2        3.94     6.88        6.864          1.64

  RAINFALL INTENSITY AND TIME OF CONCENTRATION RATIO
  CONFLUENCE FORMULA USED FOR  2 STREAMS.

  ** PEAK FLOW RATE TABLE **
  STREAM     RUNOFF      Tc      INTENSITY
  NUMBER      (CFS)    (MIN.)   (INCH/HOUR)
      1       11.29     6.88       6.864
      2       11.32     6.99       6.796

  COMPUTED CONFLUENCE ESTIMATES ARE AS FOLLOWS:
  PEAK FLOW RATE(CFS) =      11.32   Tc(MIN.) =    6.99
  TOTAL AREA(ACRES) =        4.8
  LONGEST FLOWPATH FROM NODE    121.00 TO NODE    129.00 =     750.00 FEET.

****************************************************************************
  FLOW PROCESS FROM NODE    129.00 TO NODE    130.00 IS CODE =  51
----------------------------------------------------------------------------
  >>>>>COMPUTE TRAPEZOIDAL CHANNEL FLOW<<<<<
  >>>>>TRAVELTIME THRU SUBAREA (EXISTING ELEMENT)<<<<<
============================================================================
  ELEVATION DATA: UPSTREAM(FEET) =    786.00  DOWNSTREAM(FEET) =    780.00
  CHANNEL LENGTH THRU SUBAREA(FEET) =    95.00   CHANNEL SLOPE =  0.0632
  CHANNEL BASE(FEET) =    3.00   "Z" FACTOR =   2.000
  MANNING'S FACTOR = 0.030   MAXIMUM DEPTH(FEET) =  10.00
   100 YEAR RAINFALL INTENSITY(INCH/HOUR) =  6.642
  *USER SPECIFIED(SUBAREA):
  USER-SPECIFIED RUNOFF COEFFICIENT = .3500
  S.C.S. CURVE NUMBER (AMC II) =   0
  TRAVEL TIME COMPUTED USING ESTIMATED FLOW(CFS) =      11.41
  TRAVEL TIME THRU SUBAREA BASED ON VELOCITY(FEET/SEC.) =   6.29
  AVERAGE FLOW DEPTH(FEET) =   0.46   TRAVEL TIME(MIN.) =   0.25
  Tc(MIN.) =    7.24
  SUBAREA AREA(ACRES) =     0.08       SUBAREA RUNOFF(CFS) =    0.19
  AREA-AVERAGE RUNOFF COEFFICIENT =  0.350
  TOTAL AREA(ACRES) =        4.8         PEAK FLOW RATE(CFS) =      11.32

  END OF SUBAREA CHANNEL FLOW HYDRAULICS:
  DEPTH(FEET) =  0.46   FLOW VELOCITY(FEET/SEC.) =   6.27
  LONGEST FLOWPATH FROM NODE    121.00 TO NODE    130.00 =     845.00 FEET.

****************************************************************************
```

```
  FLOW PROCESS FROM NODE    130.00 TO NODE    130.00 IS CODE =   1
----------------------------------------------------------------------------
  >>>>>DESIGNATE INDEPENDENT STREAM FOR CONFLUENCE<<<<<
============================================================================
  TOTAL NUMBER OF STREAMS =  2
  CONFLUENCE VALUES USED FOR INDEPENDENT STREAM  1 ARE:
  TIME OF CONCENTRATION(MIN.) =    7.24
  RAINFALL INTENSITY(INCH/HR) =   6.64
  TOTAL STREAM AREA(ACRES) =     4.84
  PEAK FLOW RATE(CFS) AT CONFLUENCE =     11.32

****************************************************************************
  FLOW PROCESS FROM NODE    131.00 TO NODE    132.00 IS CODE =  21
----------------------------------------------------------------------------
  >>>>>RATIONAL METHOD INITIAL SUBAREA ANALYSIS<<<<<
============================================================================
  *USER SPECIFIED(SUBAREA):
  USER-SPECIFIED RUNOFF COEFFICIENT = .3500
  S.C.S. CURVE NUMBER (AMC II) =   0
  INITIAL SUBAREA FLOW-LENGTH(FEET) =   105.00
  UPSTREAM ELEVATION(FEET) =    814.00
  DOWNSTREAM ELEVATION(FEET) =    804.00
  ELEVATION DIFFERENCE(FEET) =     10.00
  SUBAREA OVERLAND TIME OF FLOW(MIN.) =    6.369
  WARNING: INITIAL SUBAREA FLOW PATH LENGTH IS GREATER THAN
           THE MAXIMUM OVERLAND FLOW LENGTH =   100.00
           (Reference: Table 3-1B of Hydrology Manual)
           THE MAXIMUM OVERLAND FLOW LENGTH IS USED IN Tc CALCULATION!
   100 YEAR RAINFALL INTENSITY(INCH/HOUR) =  7.212
  SUBAREA RUNOFF(CFS) =      0.25
  TOTAL AREA(ACRES) =      0.10   TOTAL RUNOFF(CFS) =      0.25

****************************************************************************
  FLOW PROCESS FROM NODE    132.00 TO NODE    130.00 IS CODE =  51
----------------------------------------------------------------------------
  >>>>>COMPUTE TRAPEZOIDAL CHANNEL FLOW<<<<<
  >>>>>TRAVELTIME THRU SUBAREA (EXISTING ELEMENT)<<<<<
============================================================================
  ELEVATION DATA: UPSTREAM(FEET) =    804.00  DOWNSTREAM(FEET) =    780.00
  CHANNEL LENGTH THRU SUBAREA(FEET) =   337.00   CHANNEL SLOPE =  0.0712
  CHANNEL BASE(FEET) =    3.00   "Z" FACTOR =   2.000
  MANNING'S FACTOR = 0.030   MAXIMUM DEPTH(FEET) =  10.00
   100 YEAR RAINFALL INTENSITY(INCH/HOUR) =  5.877
  *USER SPECIFIED(SUBAREA):
  USER-SPECIFIED RUNOFF COEFFICIENT = .3500
  S.C.S. CURVE NUMBER (AMC II) =   0
  TRAVEL TIME COMPUTED USING ESTIMATED FLOW(CFS) =       0.60
  TRAVEL TIME THRU SUBAREA BASED ON VELOCITY(FEET/SEC.) =   2.36
  AVERAGE FLOW DEPTH(FEET) =   0.08   TRAVEL TIME(MIN.) =   2.38
  Tc(MIN.) =    8.75
  SUBAREA AREA(ACRES) =     0.34       SUBAREA RUNOFF(CFS) =    0.70
  AREA-AVERAGE RUNOFF COEFFICIENT =  0.350
  TOTAL AREA(ACRES) =        0.4         PEAK FLOW RATE(CFS) =       0.91

  END OF SUBAREA CHANNEL FLOW HYDRAULICS:
  DEPTH(FEET) =  0.10   FLOW VELOCITY(FEET/SEC.) =   2.77
  LONGEST FLOWPATH FROM NODE    131.00 TO NODE    130.00 =     442.00 FEET.

****************************************************************************
  FLOW PROCESS FROM NODE    130.00 TO NODE    130.00 IS CODE =   1
----------------------------------------------------------------------------
  >>>>>DESIGNATE INDEPENDENT STREAM FOR CONFLUENCE<<<<<
  >>>>>AND COMPUTE VARIOUS CONFLUENCED STREAM VALUES<<<<<
```

```
==============================================================================
  TOTAL NUMBER OF STREAMS =  2
  CONFLUENCE VALUES USED FOR INDEPENDENT STREAM  2 ARE:
  TIME OF CONCENTRATION(MIN.) =    8.75
  RAINFALL INTENSITY(INCH/HR) =   5.88
  TOTAL STREAM AREA(ACRES) =     0.44
  PEAK FLOW RATE(CFS) AT CONFLUENCE =      0.91

  ** CONFLUENCE DATA **
  STREAM     RUNOFF       Tc      INTENSITY      AREA
  NUMBER      (CFS)     (MIN.)   (INCH/HOUR)    (ACRE)
      1       11.32     7.24        6.642          4.84
      2        0.91     8.75        5.877          0.44

  RAINFALL INTENSITY AND TIME OF CONCENTRATION RATIO
  CONFLUENCE FORMULA USED FOR  2 STREAMS.

  ** PEAK FLOW RATE TABLE **
  STREAM     RUNOFF      Tc      INTENSITY
  NUMBER      (CFS)    (MIN.)   (INCH/HOUR)
      1       12.07     7.24       6.642
      2       10.92     8.75       5.877

  COMPUTED CONFLUENCE ESTIMATES ARE AS FOLLOWS:
  PEAK FLOW RATE(CFS) =      12.07   Tc(MIN.) =    7.24
  TOTAL AREA(ACRES) =        5.3
  LONGEST FLOWPATH FROM NODE    121.00 TO NODE    130.00 =     845.00 FEET.

****************************************************************************
  FLOW PROCESS FROM NODE    130.00 TO NODE    115.00 IS CODE =  51
----------------------------------------------------------------------------
  >>>>>COMPUTE TRAPEZOIDAL CHANNEL FLOW<<<<<
  >>>>>TRAVELTIME THRU SUBAREA (EXISTING ELEMENT)<<<<<
==============================================================================
  ELEVATION DATA: UPSTREAM(FEET) =    780.00  DOWNSTREAM(FEET) =    775.00
  CHANNEL LENGTH THRU SUBAREA(FEET) =   130.00   CHANNEL SLOPE =  0.0385
  CHANNEL BASE(FEET) =    3.00   "Z" FACTOR =   2.000
  MANNING'S FACTOR = 0.030   MAXIMUM DEPTH(FEET) =  10.00
   100 YEAR RAINFALL INTENSITY(INCH/HOUR) =  6.428
  *USER SPECIFIED(SUBAREA):
  USER-SPECIFIED RUNOFF COEFFICIENT = .3500
  S.C.S. CURVE NUMBER (AMC II) =   0
  TRAVEL TIME COMPUTED USING ESTIMATED FLOW(CFS) =      14.68
  TRAVEL TIME THRU SUBAREA BASED ON VELOCITY(FEET/SEC.) =   5.73
  AVERAGE FLOW DEPTH(FEET) =   0.61   TRAVEL TIME(MIN.) =   0.38
  Tc(MIN.) =    7.61
  SUBAREA AREA(ACRES) =     2.32       SUBAREA RUNOFF(CFS) =    5.22
  AREA-AVERAGE RUNOFF COEFFICIENT =  0.350
  TOTAL AREA(ACRES) =        7.6         PEAK FLOW RATE(CFS) =      17.10

  END OF SUBAREA CHANNEL FLOW HYDRAULICS:
  DEPTH(FEET) =  0.66   FLOW VELOCITY(FEET/SEC.) =   5.99
  LONGEST FLOWPATH FROM NODE    121.00 TO NODE    115.00 =     975.00 FEET.

****************************************************************************
  FLOW PROCESS FROM NODE    115.00 TO NODE    115.00 IS CODE =   1
----------------------------------------------------------------------------
  >>>>>DESIGNATE INDEPENDENT STREAM FOR CONFLUENCE<<<<<
==============================================================================
  TOTAL NUMBER OF STREAMS =  2
  CONFLUENCE VALUES USED FOR INDEPENDENT STREAM  1 ARE:
  TIME OF CONCENTRATION(MIN.) =    7.61
  RAINFALL INTENSITY(INCH/HR) =   6.43
```

```
  TOTAL STREAM AREA(ACRES) =     7.60
  PEAK FLOW RATE(CFS) AT CONFLUENCE =     17.10

****************************************************************************
  FLOW PROCESS FROM NODE    133.00 TO NODE    115.00 IS CODE =  21
----------------------------------------------------------------------------
  >>>>>RATIONAL METHOD INITIAL SUBAREA ANALYSIS<<<<<
============================================================================
  *USER SPECIFIED(SUBAREA):
  USER-SPECIFIED RUNOFF COEFFICIENT = .3500
  S.C.S. CURVE NUMBER (AMC II) =   0
  INITIAL SUBAREA FLOW-LENGTH(FEET) =   305.00
  UPSTREAM ELEVATION(FEET) =    794.00
  DOWNSTREAM ELEVATION(FEET) =    775.00
  ELEVATION DIFFERENCE(FEET) =     19.00
  SUBAREA OVERLAND TIME OF FLOW(MIN.) =    7.337
  WARNING: INITIAL SUBAREA FLOW PATH LENGTH IS GREATER THAN
           THE MAXIMUM OVERLAND FLOW LENGTH =   100.00
           (Reference: Table 3-1B of Hydrology Manual)
           THE MAXIMUM OVERLAND FLOW LENGTH IS USED IN Tc CALCULATION!
   100 YEAR RAINFALL INTENSITY(INCH/HOUR) =  6.583
  SUBAREA RUNOFF(CFS) =      0.83
  TOTAL AREA(ACRES) =      0.36   TOTAL RUNOFF(CFS) =      0.83

****************************************************************************
  FLOW PROCESS FROM NODE    115.00 TO NODE    115.00 IS CODE =   1
----------------------------------------------------------------------------
  >>>>>DESIGNATE INDEPENDENT STREAM FOR CONFLUENCE<<<<<
  >>>>>AND COMPUTE VARIOUS CONFLUENCED STREAM VALUES<<<<<
============================================================================
  TOTAL NUMBER OF STREAMS =  2
  CONFLUENCE VALUES USED FOR INDEPENDENT STREAM  2 ARE:
  TIME OF CONCENTRATION(MIN.) =    7.34
  RAINFALL INTENSITY(INCH/HR) =   6.58
  TOTAL STREAM AREA(ACRES) =     0.36
  PEAK FLOW RATE(CFS) AT CONFLUENCE =      0.83

  ** CONFLUENCE DATA **
  STREAM     RUNOFF       Tc      INTENSITY      AREA
  NUMBER      (CFS)     (MIN.)   (INCH/HOUR)    (ACRE)
      1       17.10     7.61        6.428          7.60
      2        0.83     7.34        6.583          0.36

  RAINFALL INTENSITY AND TIME OF CONCENTRATION RATIO
  CONFLUENCE FORMULA USED FOR  2 STREAMS.

  ** PEAK FLOW RATE TABLE **
  STREAM     RUNOFF      Tc      INTENSITY
  NUMBER      (CFS)    (MIN.)   (INCH/HOUR)
      1       17.52     7.34       6.583
      2       17.91     7.61       6.428

  COMPUTED CONFLUENCE ESTIMATES ARE AS FOLLOWS:
  PEAK FLOW RATE(CFS) =      17.91   Tc(MIN.) =    7.61
  TOTAL AREA(ACRES) =        8.0
  LONGEST FLOWPATH FROM NODE    121.00 TO NODE    115.00 =     975.00 FEET.

****************************************************************************
  FLOW PROCESS FROM NODE    115.00 TO NODE    115.00 IS CODE =  11
----------------------------------------------------------------------------
  >>>>>CONFLUENCE MEMORY BANK # 1 WITH THE MAIN-STREAM MEMORY<<<<<
============================================================================
```

```
** MAIN STREAM CONFLUENCE DATA **
STREAM     RUNOFF      Tc      INTENSITY     AREA
NUMBER      (CFS)    (MIN.)   (INCH/HOUR)   (ACRE)
    1       17.91     7.61       6.428        7.96
LONGEST FLOWPATH FROM NODE    121.00 TO NODE    115.00 =     975.00 FEET.

** MEMORY BANK #  1 CONFLUENCE DATA **
STREAM     RUNOFF      Tc      INTENSITY     AREA
NUMBER      (CFS)    (MIN.)   (INCH/HOUR)   (ACRE)
    1       40.67     9.99       5.395       18.72
LONGEST FLOWPATH FROM NODE    100.00 TO NODE    115.00 =    1725.00 FEET.

** PEAK FLOW RATE TABLE **
STREAM    RUNOFF       Tc      INTENSITY
NUMBER     (CFS)     (MIN.)   (INCH/HOUR)
    1      48.90       7.61        6.428
    2      55.70       9.99        5.395

COMPUTED CONFLUENCE ESTIMATES ARE AS FOLLOWS:
PEAK FLOW RATE(CFS) =      55.70   Tc(MIN.) =    9.99
TOTAL AREA(ACRES) =       26.7
============================================================================
END OF STUDY SUMMARY:
TOTAL AREA(ACRES)     =       26.7  TC(MIN.) =      9.99
PEAK FLOW RATE(CFS)   =      55.70
============================================================================
============================================================================
END OF RATIONAL METHOD ANALYSIS
```

BASIN B SEE RUN 2000 FOR THE CONTINUATION OF BASIN B

FUSCOE ENGINEERING
6390 Greenwich Drive, Suite 170
San Diego, California 92122
tel 858.554.1500 ∘ fax 858.597.0335
www.fuscoe.com

Job Name: Valiano
Proposed Hydrology
100 Year Design Storm
Job #: 2690-007-02

Date:
NOVEMBER 2014

Run Name:
P-200.DAT

Node to Node		Code	Elev 1 (feet)	Elev 2 (feet)	Length (feet)	C Factor	Area (ac.)	Comments
200	201	2	1000	970	200	0.35	0.16	
201	202	5	970	924	460	0.35	1.23	
202	203	5	924	906	190	0.35	0.41	
203	203	1						1 of 2
204	205	2	1030	1025	80	0.35	0.13	
205	206	5	1025	970	380	0.35	1.71	
206	207	5	970	930	235	0.35	1.46	
207	203	5	930	906	220	0.35	0.74	
203	203	1						2 of 2
203	208	5	906	870	320	0.35	3.13	
208	210	3	864	826	400			
210	211	9	826	760	400	0.35	2.46	
211	231	5	760	742	260	0.35	1.47	
231	231	1						1 of 2
234	233	2	882	850	100	0.35	0.21	
233	231	5	850	742	520	0.35	2.47	
231	231	1						2 of 2
231	231	10						save to bank 1
212	213	2	874	871	150	0.71	0.22	
213	214	6	871	867	305	0.71	2.17	one side
214	215	3	861	860.5	45			
215	215	1						1 of 2
216	217	2	882	880	100	0.71	0.09	
217	218	6	880	867	650	0.71	2.53	
218	215	3	861	859.9	60			
215	215	1						2 of 2
215	225	3	859.9	804	425			
225	225	1						1 of 3
220	221	2	870.3	868.3	100	0.71	0.28	
221	219	6	866.0	810	460	0.71	1.48	
219	225	3	804.5	804	25			
225	225	1						2 of 3
223	224	2	841	839	100	0.71	0.39	
224	225	6	839	810	310	0.71	2.82	
225	225	1						3 of 3
225	226	3	804	784.8	310			

226	226	1						1 of 3
209	222.4	2	810	800	65	0.71	0.09	
222.4	222.2	6	800	791	230	0.71	0.77	one side
222.2	226	3	785	784.8	10			
226	226	1						2 of 3
227	232	2	804.4	802.8	80	0.71	0.24	
232	226	6	803	790	240	0.71	0.21	one side
226	226	1						3 of 3
226	228	3	784	770	140			
228	229	5	770	768	200	0.35	0.74	
229	230	3	768	759	60			
230	230	10						save to bank 2
268	269	2	818	812	90	0.71	0.08	
269	280	6	812	781	360	0.71	0.59	one side
280	276	3	775	774.5	25			
276	276	1						1 of 2
272	269	2	818	812	90	0.71	0.05	
269	276	6	812	781	350	0.71	0.16	one side
276	276	1						2 of 2
276	284	3	774.5	770	30			
284	284	1						1 of 2
277.5	277	2	777.8	776.8	100	0.71	0.48	
277	278	6	776.8	774	300	0.71	2.03	one side
278	284	3	771	770	25			
284	284	1						2 of 2
284	230	3	770	759	180			
230	230	11						add bank 2
230	230	12						clear bank 2
230	231	5	759	742	140			
231	231	11						add bank1
231	231	12						clear bank 1
231	265	5	742	720	465	0.35	4.26	
265	265	10						save to bank 1
283	285	2	806	760	330	0.71	0.29	
285	282	3	754	753.6	20			
282	282	1						1 of 2
280	281	2	781	760	350	0.71	0.33	
281	282	3	754	753.6	5			
282	282	1						2 of 2
282	286	3	753.6	746	120			

286	286	1						1 of 2
287	288	2	760	758	100	0.71	0.29	
288	289	6	758	754	300	0.71	1.67	one side
289	286	3	748	746	50			
286	286	1						2 of 2
286	290	3	746	735.5	175			
290	290	1						1 of 3
291	292	2	752	750	100	0.71	0.41	
292	293	6	750	742	300	0.71	2.19	one side
293	290	3	736	735.5	50			
290	290	1						2 of 3
281	299	2	760	752	100	0.71	0.12	
299	290	6	752	742	175	0.71	0.17	
290	290	1						3 of 3
290	295	3	739.5	739	50			
295	295	1						1 of 2
295	295	2	739	738.5	50	0.35	0.33	
295	295	1						2 of 2
295	284.2	3	739	730	50			
284.2	265	5	730	720	180			
265	265	11						add bank 1
265	265	12						clear bank 1
265	254	3	720	714	125			
254	253	5	714	692	370	0.71	3.8	
253	246.5	3	692	684.33	140			
246.5	246.5	10						save to bank
253.8	253.7	2	711.9	709.9	100	0.71	0.19	
253.7	253.1	6	709.9	696	340	0.71	0.75	
253.1	253.3	3	690.7	690.3	40			
253.3	253.3	1						1 of 2
253.5	253.4	2	709.11	707.11	100	0.71	0.21	
253.4	253.3	6	707	696	350	0.71	0.63	
253.3	253.3	1						2 of 2
253.3	253.2	3	690.3	690	25			
253.2	250.6	3	690	684.8	240			
250.6	250.6	10						save to bank 2
238	239	2	864	852	80	0.35	0.2	
239	240	5	852	770	370	0.35	2.14	
240	241	3	767	733.7	75			
241	243.5	3	733.7	731	270			
243.5	243.5	1						1 of 2

242	243	2	864	750	400	0.35	1.8	
243	243.5	5	750	731	145	0.71	0.67	
243.5	243.5	1						2 of 2
243.5	244	5	731	726	65			
244	246	3	726	724	75			
246	246.5	5	724	686.5	500	0.71	2.02	
246.5	246.5	11						add bank 1
246.5	246.5	12						clear bank 1
246.5	250	3	684.33	684.21	25			
250	250	10						save to bank 1
247	248	2	862	828	180	0.35	0.3	
248	249	5	828	716	1030	0.35	6.78	
249	249	1						1 of 2
251	252	2	790	780	270	0.35	0.63	
252	249	5	780	718	420	0.35	3.26	
249	249	1						2 of 2
249	250	5	718	686	350			
250	250	11						add bank 1
250	250	12						clear bank 1
250	250.6	3	684.21	684.01	25			
250.6	250.6	1						add bank 2
250.6	250.6	12						clear bank 2
250.6	250.7	3	684.21	684	15			
250.7	257	5	684	672	310			
257	257	1						1 of 2
255	256	2	790	758	400	0.35	1.62	
256	257	5	758	672	600	0.35	3.51	
257	257	1						2 of 2

```
****************************************************************************

            RATIONAL METHOD HYDROLOGY COMPUTER PROGRAM PACKAGE
            Reference: SAN DIEGO COUNTY FLOOD CONTROL DISTRICT
                         2003,1985,1981 HYDROLOGY MANUAL
         (c) Copyright 1982-2012 Advanced Engineering Software (aes)
             Ver. 19.0 Release Date: 06/01/2012  License ID 1355

                           Analysis prepared by:

                             Fuscoe Engineering
                             6390 Greenwich Dr.
                                 Suite 170
                            San Diego, CA 92122

 ************************** DESCRIPTION OF STUDY **************************
* VALIANO HYDROLOGY STUDY                                                  *
* PROPOSED BASIN 200                                                       *
* OCTOBER 20, 2014                                                         *
 ***************************************************************************

  FILE NAME: P-200.DAT
  TIME/DATE OF STUDY: 17:13 10/20/2014
----------------------------------------------------------------------------
  USER SPECIFIED HYDROLOGY AND HYDRAULIC MODEL INFORMATION:
----------------------------------------------------------------------------
  2003 SAN DIEGO MANUAL CRITERIA

  USER SPECIFIED STORM EVENT(YEAR) = 100.00
  6-HOUR DURATION PRECIPITATION (INCHES) =   3.200
  SPECIFIED MINIMUM PIPE SIZE(INCH) =  12.00
  SPECIFIED PERCENT OF GRADIENTS(DECIMAL) TO USE FOR FRICTION SLOPE = 0.90
  SAN DIEGO HYDROLOGY MANUAL "C"-VALUES USED FOR RATIONAL METHOD
  NOTE: USE MODIFIED RATIONAL METHOD PROCEDURES FOR CONFLUENCE ANALYSIS
  *USER-DEFINED STREET-SECTIONS FOR COUPLED PIPEFLOW AND STREETFLOW MODEL*
     HALF-  CROWN TO   STREET-CROSSFALL:   CURB  GUTTER-GEOMETRIES:  MANNING
     WIDTH  CROSSFALL  IN-  / OUT-/PARK-  HEIGHT  WIDTH  LIP   HIKE  FACTOR
NO.   (FT)     (FT)    SIDE / SIDE/ WAY    (FT)    (FT)  (FT)  (FT)    (n)
===  =====  =========  =================  ======  ===== ====== ===== =======
  1   16.0      8.0    0.020/0.020/0.020   0.33    0.10 0.0100 0.010 0.0150

  GLOBAL STREET FLOW-DEPTH CONSTRAINTS:
    1. Relative Flow-Depth =  0.33 FEET
       as (Maximum Allowable Street Flow Depth) - (Top-of-Curb)
    2. (Depth)*(Velocity) Constraint =  6.0 (FT*FT/S)
  *SIZE PIPE WITH A FLOW CAPACITY GREATER THAN
   OR EQUAL TO THE UPSTREAM TRIBUTARY PIPE.*

****************************************************************************
  FLOW PROCESS FROM NODE    200.00 TO NODE    201.00 IS CODE =  21
----------------------------------------------------------------------------
  >>>>>RATIONAL METHOD INITIAL SUBAREA ANALYSIS<<<<<
============================================================================
  *USER SPECIFIED(SUBAREA):
  USER-SPECIFIED RUNOFF COEFFICIENT = .3500
  S.C.S. CURVE NUMBER (AMC II) =   0
  INITIAL SUBAREA FLOW-LENGTH(FEET) =   200.00
  UPSTREAM ELEVATION(FEET) =   1000.00
  DOWNSTREAM ELEVATION(FEET) =    970.00
  ELEVATION DIFFERENCE(FEET) =     30.00
  SUBAREA OVERLAND TIME OF FLOW(MIN.) =    6.267
  WARNING: INITIAL SUBAREA FLOW PATH LENGTH IS GREATER THAN
```

```
          THE MAXIMUM OVERLAND FLOW LENGTH =   100.00
          (Reference: Table 3-1B of Hydrology Manual)
          THE MAXIMUM OVERLAND FLOW LENGTH IS USED IN Tc CALCULATION!
   100 YEAR RAINFALL INTENSITY(INCH/HOUR) =  7.288
  SUBAREA RUNOFF(CFS) =      0.41
  TOTAL AREA(ACRES) =      0.16   TOTAL RUNOFF(CFS) =      0.41

****************************************************************************
  FLOW PROCESS FROM NODE    201.00 TO NODE    202.00 IS CODE =  51
----------------------------------------------------------------------------
  >>>>>COMPUTE TRAPEZOIDAL CHANNEL FLOW<<<<<
  >>>>>TRAVELTIME THRU SUBAREA (EXISTING ELEMENT)<<<<<
============================================================================
  ELEVATION DATA: UPSTREAM(FEET) =    970.00  DOWNSTREAM(FEET) =    924.00
  CHANNEL LENGTH THRU SUBAREA(FEET) =   460.00   CHANNEL SLOPE =  0.1000
  CHANNEL BASE(FEET) =    3.00   "Z" FACTOR =   2.000
  MANNING'S FACTOR = 0.030   MAXIMUM DEPTH(FEET) =  10.00
   100 YEAR RAINFALL INTENSITY(INCH/HOUR) =  6.122
  *USER SPECIFIED(SUBAREA):
  USER-SPECIFIED RUNOFF COEFFICIENT = .3500
  S.C.S. CURVE NUMBER (AMC II) =   0
  TRAVEL TIME COMPUTED USING ESTIMATED FLOW(CFS) =       1.73
  TRAVEL TIME THRU SUBAREA BASED ON VELOCITY(FEET/SEC.) =   3.94
  AVERAGE FLOW DEPTH(FEET) =   0.13   TRAVEL TIME(MIN.) =   1.95
  Tc(MIN.) =    8.21
  SUBAREA AREA(ACRES) =     1.23       SUBAREA RUNOFF(CFS) =    2.64
  AREA-AVERAGE RUNOFF COEFFICIENT =  0.350
  TOTAL AREA(ACRES) =        1.4         PEAK FLOW RATE(CFS) =       2.98

  END OF SUBAREA CHANNEL FLOW HYDRAULICS:
  DEPTH(FEET) =  0.19   FLOW VELOCITY(FEET/SEC.) =   4.70
  LONGEST FLOWPATH FROM NODE    200.00 TO NODE    202.00 =     660.00 FEET.

****************************************************************************
  FLOW PROCESS FROM NODE    202.00 TO NODE    203.00 IS CODE =  51
----------------------------------------------------------------------------
  >>>>>COMPUTE TRAPEZOIDAL CHANNEL FLOW<<<<<
  >>>>>TRAVELTIME THRU SUBAREA (EXISTING ELEMENT)<<<<<
============================================================================
  ELEVATION DATA: UPSTREAM(FEET) =    924.00  DOWNSTREAM(FEET) =    906.00
  CHANNEL LENGTH THRU SUBAREA(FEET) =   190.00   CHANNEL SLOPE =  0.0947
  CHANNEL BASE(FEET) =    3.00   "Z" FACTOR =   2.000
  MANNING'S FACTOR = 0.030   MAXIMUM DEPTH(FEET) =  10.00
   100 YEAR RAINFALL INTENSITY(INCH/HOUR) =  5.830
  *USER SPECIFIED(SUBAREA):
  USER-SPECIFIED RUNOFF COEFFICIENT = .3500
  S.C.S. CURVE NUMBER (AMC II) =   0
  TRAVEL TIME COMPUTED USING ESTIMATED FLOW(CFS) =       3.40
  TRAVEL TIME THRU SUBAREA BASED ON VELOCITY(FEET/SEC.) =   4.91
  AVERAGE FLOW DEPTH(FEET) =   0.20   TRAVEL TIME(MIN.) =   0.65
  Tc(MIN.) =    8.86
  SUBAREA AREA(ACRES) =     0.41       SUBAREA RUNOFF(CFS) =    0.84
  AREA-AVERAGE RUNOFF COEFFICIENT =  0.350
  TOTAL AREA(ACRES) =        1.8         PEAK FLOW RATE(CFS) =       3.67

  END OF SUBAREA CHANNEL FLOW HYDRAULICS:
  DEPTH(FEET) =  0.22   FLOW VELOCITY(FEET/SEC.) =   4.94
  LONGEST FLOWPATH FROM NODE    200.00 TO NODE    203.00 =     850.00 FEET.

****************************************************************************
  FLOW PROCESS FROM NODE    203.00 TO NODE    203.00 IS CODE =   1
----------------------------------------------------------------------------
  >>>>>DESIGNATE INDEPENDENT STREAM FOR CONFLUENCE<<<<<
```

```
==============================================================================
  TOTAL NUMBER OF STREAMS =  2
  CONFLUENCE VALUES USED FOR INDEPENDENT STREAM  1 ARE:
  TIME OF CONCENTRATION(MIN.) =    8.86
  RAINFALL INTENSITY(INCH/HR) =   5.83
  TOTAL STREAM AREA(ACRES) =     1.80
  PEAK FLOW RATE(CFS) AT CONFLUENCE =      3.67

******************************************************************************
  FLOW PROCESS FROM NODE    204.00 TO NODE    205.00 IS CODE =  21
------------------------------------------------------------------------------
  >>>>>RATIONAL METHOD INITIAL SUBAREA ANALYSIS<<<<<
==============================================================================
  *USER SPECIFIED(SUBAREA):
  USER-SPECIFIED RUNOFF COEFFICIENT = .3500
  S.C.S. CURVE NUMBER (AMC II) =   0
  INITIAL SUBAREA FLOW-LENGTH(FEET) =    80.00
  UPSTREAM ELEVATION(FEET) =   1030.00
  DOWNSTREAM ELEVATION(FEET) =   1025.00
  ELEVATION DIFFERENCE(FEET) =      5.00
  SUBAREA OVERLAND TIME OF FLOW(MIN.) =    6.556
   100 YEAR RAINFALL INTENSITY(INCH/HOUR) =  7.080
  SUBAREA RUNOFF(CFS) =      0.32
  TOTAL AREA(ACRES) =      0.13   TOTAL RUNOFF(CFS) =      0.32

******************************************************************************
  FLOW PROCESS FROM NODE    205.00 TO NODE    206.00 IS CODE =  51
------------------------------------------------------------------------------
  >>>>>COMPUTE TRAPEZOIDAL CHANNEL FLOW<<<<<
  >>>>>TRAVELTIME THRU SUBAREA (EXISTING ELEMENT)<<<<<
==============================================================================
  ELEVATION DATA: UPSTREAM(FEET) =   1025.00  DOWNSTREAM(FEET) =    970.00
  CHANNEL LENGTH THRU SUBAREA(FEET) =   380.00   CHANNEL SLOPE =  0.1447
  CHANNEL BASE(FEET) =    3.00   "Z" FACTOR =   2.000
  MANNING'S FACTOR = 0.030   MAXIMUM DEPTH(FEET) =  10.00
   100 YEAR RAINFALL INTENSITY(INCH/HOUR) =  6.291
  *USER SPECIFIED(SUBAREA):
  USER-SPECIFIED RUNOFF COEFFICIENT = .3500
  S.C.S. CURVE NUMBER (AMC II) =   0
  TRAVEL TIME COMPUTED USING ESTIMATED FLOW(CFS) =       2.21
  TRAVEL TIME THRU SUBAREA BASED ON VELOCITY(FEET/SEC.) =   4.81
  AVERAGE FLOW DEPTH(FEET) =   0.14   TRAVEL TIME(MIN.) =   1.32
  Tc(MIN.) =    7.87
  SUBAREA AREA(ACRES) =     1.71       SUBAREA RUNOFF(CFS) =    3.76
  AREA-AVERAGE RUNOFF COEFFICIENT =  0.350
  TOTAL AREA(ACRES) =        1.8         PEAK FLOW RATE(CFS) =       4.05

  END OF SUBAREA CHANNEL FLOW HYDRAULICS:
  DEPTH(FEET) =  0.20   FLOW VELOCITY(FEET/SEC.) =   5.92
  LONGEST FLOWPATH FROM NODE    204.00 TO NODE    206.00 =     460.00 FEET.

******************************************************************************
  FLOW PROCESS FROM NODE    206.00 TO NODE    207.00 IS CODE =  51
------------------------------------------------------------------------------
  >>>>>COMPUTE TRAPEZOIDAL CHANNEL FLOW<<<<<
  >>>>>TRAVELTIME THRU SUBAREA (EXISTING ELEMENT)<<<<<
==============================================================================
  ELEVATION DATA: UPSTREAM(FEET) =    970.00  DOWNSTREAM(FEET) =    930.00
  CHANNEL LENGTH THRU SUBAREA(FEET) =   235.00   CHANNEL SLOPE =  0.1702
  CHANNEL BASE(FEET) =    3.00   "Z" FACTOR =   2.000
  MANNING'S FACTOR = 0.030   MAXIMUM DEPTH(FEET) =  10.00
   100 YEAR RAINFALL INTENSITY(INCH/HOUR) =  6.017
  *USER SPECIFIED(SUBAREA):
```

```
  USER-SPECIFIED RUNOFF COEFFICIENT = .3500
  S.C.S. CURVE NUMBER (AMC II) =   0
  TRAVEL TIME COMPUTED USING ESTIMATED FLOW(CFS) =       5.59
  TRAVEL TIME THRU SUBAREA BASED ON VELOCITY(FEET/SEC.) =   6.96
  AVERAGE FLOW DEPTH(FEET) =   0.23   TRAVEL TIME(MIN.) =   0.56
  Tc(MIN.) =    8.44
  SUBAREA AREA(ACRES) =     1.46       SUBAREA RUNOFF(CFS) =    3.07
  AREA-AVERAGE RUNOFF COEFFICIENT =  0.350
  TOTAL AREA(ACRES) =        3.3         PEAK FLOW RATE(CFS) =       6.95

  END OF SUBAREA CHANNEL FLOW HYDRAULICS:
  DEPTH(FEET) =  0.26   FLOW VELOCITY(FEET/SEC.) =   7.52
  LONGEST FLOWPATH FROM NODE    204.00 TO NODE    207.00 =     695.00 FEET.

****************************************************************************
  FLOW PROCESS FROM NODE    207.00 TO NODE    203.00 IS CODE =  51
----------------------------------------------------------------------------
  >>>>>COMPUTE TRAPEZOIDAL CHANNEL FLOW<<<<<
  >>>>>TRAVELTIME THRU SUBAREA (EXISTING ELEMENT)<<<<<
============================================================================
  ELEVATION DATA: UPSTREAM(FEET) =    930.00  DOWNSTREAM(FEET) =    906.00
  CHANNEL LENGTH THRU SUBAREA(FEET) =   220.00   CHANNEL SLOPE =  0.1091
  CHANNEL BASE(FEET) =    3.00   "Z" FACTOR =   2.000
  MANNING'S FACTOR = 0.030   MAXIMUM DEPTH(FEET) =  10.00
   100 YEAR RAINFALL INTENSITY(INCH/HOUR) =  5.777
  *USER SPECIFIED(SUBAREA):
  USER-SPECIFIED RUNOFF COEFFICIENT = .3500
  S.C.S. CURVE NUMBER (AMC II) =   0
  TRAVEL TIME COMPUTED USING ESTIMATED FLOW(CFS) =       7.70
  TRAVEL TIME THRU SUBAREA BASED ON VELOCITY(FEET/SEC.) =   6.67
  AVERAGE FLOW DEPTH(FEET) =   0.32   TRAVEL TIME(MIN.) =   0.55
  Tc(MIN.) =    8.99
  SUBAREA AREA(ACRES) =     0.74       SUBAREA RUNOFF(CFS) =    1.50
  AREA-AVERAGE RUNOFF COEFFICIENT =  0.350
  TOTAL AREA(ACRES) =        4.0         PEAK FLOW RATE(CFS) =       8.17

  END OF SUBAREA CHANNEL FLOW HYDRAULICS:
  DEPTH(FEET) =  0.33   FLOW VELOCITY(FEET/SEC.) =   6.74
  LONGEST FLOWPATH FROM NODE    204.00 TO NODE    203.00 =     915.00 FEET.

****************************************************************************
  FLOW PROCESS FROM NODE    203.00 TO NODE    203.00 IS CODE =   1
----------------------------------------------------------------------------
  >>>>>DESIGNATE INDEPENDENT STREAM FOR CONFLUENCE<<<<<
  >>>>>AND COMPUTE VARIOUS CONFLUENCED STREAM VALUES<<<<<
============================================================================
  TOTAL NUMBER OF STREAMS =  2
  CONFLUENCE VALUES USED FOR INDEPENDENT STREAM  2 ARE:
  TIME OF CONCENTRATION(MIN.) =    8.99
  RAINFALL INTENSITY(INCH/HR) =   5.78
  TOTAL STREAM AREA(ACRES) =     4.04
  PEAK FLOW RATE(CFS) AT CONFLUENCE =      8.17

  ** CONFLUENCE DATA **
  STREAM     RUNOFF       Tc      INTENSITY      AREA
  NUMBER      (CFS)     (MIN.)   (INCH/HOUR)    (ACRE)
      1        3.67     8.86        5.830          1.80
      2        8.17     8.99        5.777          4.04

  RAINFALL INTENSITY AND TIME OF CONCENTRATION RATIO
  CONFLUENCE FORMULA USED FOR  2 STREAMS.

  ** PEAK FLOW RATE TABLE **
```

```
  STREAM     RUNOFF      Tc      INTENSITY
  NUMBER      (CFS)    (MIN.)   (INCH/HOUR)
      1       11.73     8.86       5.830
      2       11.81     8.99       5.777

  COMPUTED CONFLUENCE ESTIMATES ARE AS FOLLOWS:
  PEAK FLOW RATE(CFS) =      11.81   Tc(MIN.) =    8.99
  TOTAL AREA(ACRES) =        5.8
  LONGEST FLOWPATH FROM NODE    204.00 TO NODE    203.00 =     915.00 FEET.

****************************************************************************
  FLOW PROCESS FROM NODE    203.00 TO NODE    208.00 IS CODE =  51
----------------------------------------------------------------------------
  >>>>>COMPUTE TRAPEZOIDAL CHANNEL FLOW<<<<<
  >>>>>TRAVELTIME THRU SUBAREA (EXISTING ELEMENT)<<<<<
============================================================================
  ELEVATION DATA: UPSTREAM(FEET) =    906.00  DOWNSTREAM(FEET) =    870.00
  CHANNEL LENGTH THRU SUBAREA(FEET) =   320.00   CHANNEL SLOPE =  0.1125
  CHANNEL BASE(FEET) =    3.00   "Z" FACTOR =   2.000
  MANNING'S FACTOR = 0.030   MAXIMUM DEPTH(FEET) =  10.00
   100 YEAR RAINFALL INTENSITY(INCH/HOUR) =  5.526
  *USER SPECIFIED(SUBAREA):
  USER-SPECIFIED RUNOFF COEFFICIENT = .3500
  S.C.S. CURVE NUMBER (AMC II) =   0
  TRAVEL TIME COMPUTED USING ESTIMATED FLOW(CFS) =      14.83
  TRAVEL TIME THRU SUBAREA BASED ON VELOCITY(FEET/SEC.) =   8.34
  AVERAGE FLOW DEPTH(FEET) =   0.45   TRAVEL TIME(MIN.) =   0.64
  Tc(MIN.) =    9.63
  SUBAREA AREA(ACRES) =     3.13       SUBAREA RUNOFF(CFS) =    6.05
  AREA-AVERAGE RUNOFF COEFFICIENT =  0.350
  TOTAL AREA(ACRES) =        9.0         PEAK FLOW RATE(CFS) =      17.35

  END OF SUBAREA CHANNEL FLOW HYDRAULICS:
  DEPTH(FEET) =  0.50   FLOW VELOCITY(FEET/SEC.) =   8.70
  LONGEST FLOWPATH FROM NODE    204.00 TO NODE    208.00 =    1235.00 FEET.

****************************************************************************
  FLOW PROCESS FROM NODE    208.00 TO NODE    210.00 IS CODE =  31
----------------------------------------------------------------------------
  >>>>>COMPUTE PIPE-FLOW TRAVEL TIME THRU SUBAREA<<<<<
  >>>>>USING COMPUTER-ESTIMATED PIPESIZE (NON-PRESSURE FLOW)<<<<<
============================================================================
  ELEVATION DATA: UPSTREAM(FEET) =   864.00  DOWNSTREAM(FEET) =   826.00
  FLOW LENGTH(FEET) =   400.00   MANNING'S N =  0.013
  DEPTH OF FLOW IN  15.0 INCH PIPE IS  11.3 INCHES
  PIPE-FLOW VELOCITY(FEET/SEC.) =  17.46
  ESTIMATED PIPE DIAMETER(INCH) =  15.00    NUMBER OF PIPES =   1
  PIPE-FLOW(CFS) =      17.35
  PIPE TRAVEL TIME(MIN.) =   0.38    Tc(MIN.) =   10.01
  LONGEST FLOWPATH FROM NODE    204.00 TO NODE    210.00 =    1635.00 FEET.

****************************************************************************
  FLOW PROCESS FROM NODE    210.00 TO NODE    211.00 IS CODE =  51
----------------------------------------------------------------------------
  >>>>>COMPUTE TRAPEZOIDAL CHANNEL FLOW<<<<<
  >>>>>TRAVELTIME THRU SUBAREA (EXISTING ELEMENT)<<<<<
============================================================================
  ELEVATION DATA: UPSTREAM(FEET) =    826.00  DOWNSTREAM(FEET) =    760.00
  CHANNEL LENGTH THRU SUBAREA(FEET) =     2.46   CHANNEL SLOPE = 26.8293
  CHANNEL BASE(FEET) =    3.00   "Z" FACTOR =   2.000
  MANNING'S FACTOR = 0.030   MAXIMUM DEPTH(FEET) =  10.00
   100 YEAR RAINFALL INTENSITY(INCH/HOUR) =  5.389
  *USER SPECIFIED(SUBAREA):
```

```
  USER-SPECIFIED RUNOFF COEFFICIENT = .3500
  S.C.S. CURVE NUMBER (AMC II) =   0
  TRAVEL TIME COMPUTED USING ESTIMATED FLOW(CFS) =      19.67
  TRAVEL TIME THRU SUBAREA BASED ON VELOCITY(FEET/SEC.) =  55.71
  AVERAGE FLOW DEPTH(FEET) =   0.11   TRAVEL TIME(MIN.) =   0.00
  Tc(MIN.) =   10.01
  SUBAREA AREA(ACRES) =     2.46       SUBAREA RUNOFF(CFS) =    4.64
  AREA-AVERAGE RUNOFF COEFFICIENT =  0.350
  TOTAL AREA(ACRES) =       11.4         PEAK FLOW RATE(CFS) =      21.56

  END OF SUBAREA CHANNEL FLOW HYDRAULICS:
  DEPTH(FEET) =  0.12   FLOW VELOCITY(FEET/SEC.) =  56.82
  LONGEST FLOWPATH FROM NODE    204.00 TO NODE    211.00 =    1637.46 FEET.

****************************************************************************
  FLOW PROCESS FROM NODE    211.00 TO NODE    231.00 IS CODE =  51
----------------------------------------------------------------------------
  >>>>>COMPUTE TRAPEZOIDAL CHANNEL FLOW<<<<<
  >>>>>TRAVELTIME THRU SUBAREA (EXISTING ELEMENT)<<<<<
============================================================================
  ELEVATION DATA: UPSTREAM(FEET) =    760.00  DOWNSTREAM(FEET) =    742.00
  CHANNEL LENGTH THRU SUBAREA(FEET) =   260.00   CHANNEL SLOPE =  0.0692
  CHANNEL BASE(FEET) =    3.00   "Z" FACTOR =   2.000
  MANNING'S FACTOR = 0.030   MAXIMUM DEPTH(FEET) =  10.00
   100 YEAR RAINFALL INTENSITY(INCH/HOUR) =  5.209
  *USER SPECIFIED(SUBAREA):
  USER-SPECIFIED RUNOFF COEFFICIENT = .3500
  S.C.S. CURVE NUMBER (AMC II) =   0
  TRAVEL TIME COMPUTED USING ESTIMATED FLOW(CFS) =      22.90
  TRAVEL TIME THRU SUBAREA BASED ON VELOCITY(FEET/SEC.) =   8.02
  AVERAGE FLOW DEPTH(FEET) =   0.66   TRAVEL TIME(MIN.) =   0.54
  Tc(MIN.) =   10.55
  SUBAREA AREA(ACRES) =     1.47       SUBAREA RUNOFF(CFS) =    2.68
  AREA-AVERAGE RUNOFF COEFFICIENT =  0.350
  TOTAL AREA(ACRES) =       12.9         PEAK FLOW RATE(CFS) =      23.52

  END OF SUBAREA CHANNEL FLOW HYDRAULICS:
  DEPTH(FEET) =  0.67   FLOW VELOCITY(FEET/SEC.) =   8.02
  LONGEST FLOWPATH FROM NODE    204.00 TO NODE    231.00 =    1897.46 FEET.

****************************************************************************
  FLOW PROCESS FROM NODE    231.00 TO NODE    231.00 IS CODE =   1
----------------------------------------------------------------------------
  >>>>>DESIGNATE INDEPENDENT STREAM FOR CONFLUENCE<<<<<
============================================================================
  TOTAL NUMBER OF STREAMS =  2
  CONFLUENCE VALUES USED FOR INDEPENDENT STREAM  1 ARE:
  TIME OF CONCENTRATION(MIN.) =   10.55
  RAINFALL INTENSITY(INCH/HR) =   5.21
  TOTAL STREAM AREA(ACRES) =    12.90
  PEAK FLOW RATE(CFS) AT CONFLUENCE =     23.52

****************************************************************************
  FLOW PROCESS FROM NODE    234.00 TO NODE    233.00 IS CODE =  21
----------------------------------------------------------------------------
  >>>>>RATIONAL METHOD INITIAL SUBAREA ANALYSIS<<<<<
============================================================================
  *USER SPECIFIED(SUBAREA):
  USER-SPECIFIED RUNOFF COEFFICIENT = .3500
  S.C.S. CURVE NUMBER (AMC II) =   0
  INITIAL SUBAREA FLOW-LENGTH(FEET) =   100.00
  UPSTREAM ELEVATION(FEET) =    882.00
  DOWNSTREAM ELEVATION(FEET) =    850.00
```

```
  ELEVATION DIFFERENCE(FEET) =     32.00
  SUBAREA OVERLAND TIME OF FLOW(MIN.) =    6.267
  WARNING: THE MAXIMUM OVERLAND FLOW SLOPE, 10.%, IS USED IN Tc CALCULATION!
   100 YEAR RAINFALL INTENSITY(INCH/HOUR) =  7.288
  SUBAREA RUNOFF(CFS) =      0.54
  TOTAL AREA(ACRES) =      0.21   TOTAL RUNOFF(CFS) =      0.54

****************************************************************************
  FLOW PROCESS FROM NODE    233.00 TO NODE    231.00 IS CODE =  51
----------------------------------------------------------------------------
  >>>>>COMPUTE TRAPEZOIDAL CHANNEL FLOW<<<<<
  >>>>>TRAVELTIME THRU SUBAREA (EXISTING ELEMENT)<<<<<
============================================================================
  ELEVATION DATA: UPSTREAM(FEET) =    850.00  DOWNSTREAM(FEET) =    742.00
  CHANNEL LENGTH THRU SUBAREA(FEET) =   520.00   CHANNEL SLOPE =  0.2077
  CHANNEL BASE(FEET) =    3.00   "Z" FACTOR =   2.000
  MANNING'S FACTOR = 0.030   MAXIMUM DEPTH(FEET) =  10.00
   100 YEAR RAINFALL INTENSITY(INCH/HOUR) =  6.390
  *USER SPECIFIED(SUBAREA):
  USER-SPECIFIED RUNOFF COEFFICIENT = .3500
  S.C.S. CURVE NUMBER (AMC II) =   0
  TRAVEL TIME COMPUTED USING ESTIMATED FLOW(CFS) =       3.32
  TRAVEL TIME THRU SUBAREA BASED ON VELOCITY(FEET/SEC.) =   6.11
  AVERAGE FLOW DEPTH(FEET) =   0.16   TRAVEL TIME(MIN.) =   1.42
  Tc(MIN.) =    7.68
  SUBAREA AREA(ACRES) =     2.47       SUBAREA RUNOFF(CFS) =    5.52
  AREA-AVERAGE RUNOFF COEFFICIENT =  0.350
  TOTAL AREA(ACRES) =        2.7         PEAK FLOW RATE(CFS) =       5.99

  END OF SUBAREA CHANNEL FLOW HYDRAULICS:
  DEPTH(FEET) =  0.23   FLOW VELOCITY(FEET/SEC.) =   7.68
  LONGEST FLOWPATH FROM NODE    234.00 TO NODE    231.00 =     620.00 FEET.

****************************************************************************
  FLOW PROCESS FROM NODE    231.00 TO NODE    231.00 IS CODE =   1
----------------------------------------------------------------------------
  >>>>>DESIGNATE INDEPENDENT STREAM FOR CONFLUENCE<<<<<
  >>>>>AND COMPUTE VARIOUS CONFLUENCED STREAM VALUES<<<<<
============================================================================
  TOTAL NUMBER OF STREAMS =  2
  CONFLUENCE VALUES USED FOR INDEPENDENT STREAM  2 ARE:
  TIME OF CONCENTRATION(MIN.) =    7.68
  RAINFALL INTENSITY(INCH/HR) =   6.39
  TOTAL STREAM AREA(ACRES) =     2.68
  PEAK FLOW RATE(CFS) AT CONFLUENCE =      5.99

  ** CONFLUENCE DATA **
  STREAM     RUNOFF       Tc      INTENSITY      AREA
  NUMBER      (CFS)     (MIN.)   (INCH/HOUR)    (ACRE)
      1       23.52    10.55        5.209         12.90
      2        5.99     7.68        6.390          2.68

  RAINFALL INTENSITY AND TIME OF CONCENTRATION RATIO
  CONFLUENCE FORMULA USED FOR  2 STREAMS.

  ** PEAK FLOW RATE TABLE **
  STREAM     RUNOFF      Tc      INTENSITY
  NUMBER      (CFS)    (MIN.)   (INCH/HOUR)
      1       25.17     7.68       6.390
      2       28.41    10.55       5.209

  COMPUTED CONFLUENCE ESTIMATES ARE AS FOLLOWS:
  PEAK FLOW RATE(CFS) =      28.41   Tc(MIN.) =   10.55
```

```
  TOTAL AREA(ACRES) =       15.6
  LONGEST FLOWPATH FROM NODE    204.00 TO NODE    231.00 =    1897.46 FEET.

****************************************************************************
  FLOW PROCESS FROM NODE    231.00 TO NODE    231.00 IS CODE =  10
----------------------------------------------------------------------------
  >>>>>MAIN-STREAM MEMORY COPIED ONTO MEMORY BANK # 1 <<<<<
============================================================================

****************************************************************************
  FLOW PROCESS FROM NODE    212.00 TO NODE    213.00 IS CODE =  21
----------------------------------------------------------------------------
  >>>>>RATIONAL METHOD INITIAL SUBAREA ANALYSIS<<<<<
============================================================================
  *USER SPECIFIED(SUBAREA):
  USER-SPECIFIED RUNOFF COEFFICIENT = .7100
  S.C.S. CURVE NUMBER (AMC II) =   0
  INITIAL SUBAREA FLOW-LENGTH(FEET) =   150.00
  UPSTREAM ELEVATION(FEET) =    874.00
  DOWNSTREAM ELEVATION(FEET) =    871.00
  ELEVATION DIFFERENCE(FEET) =      3.00
  SUBAREA OVERLAND TIME OF FLOW(MIN.) =    4.984
  WARNING: INITIAL SUBAREA FLOW PATH LENGTH IS GREATER THAN
           THE MAXIMUM OVERLAND FLOW LENGTH =    80.00
           (Reference: Table 3-1B of Hydrology Manual)
           THE MAXIMUM OVERLAND FLOW LENGTH IS USED IN Tc CALCULATION!
   100 YEAR RAINFALL INTENSITY(INCH/HOUR) =  8.431
  NOTE: RAINFALL INTENSITY IS BASED ON Tc = 5-MINUTE.
  SUBAREA RUNOFF(CFS) =      1.32
  TOTAL AREA(ACRES) =      0.22   TOTAL RUNOFF(CFS) =      1.32

****************************************************************************
  FLOW PROCESS FROM NODE    213.00 TO NODE    214.00 IS CODE =  62
----------------------------------------------------------------------------
  >>>>>COMPUTE STREET FLOW TRAVEL TIME THRU SUBAREA<<<<<
  >>>>>(STREET TABLE SECTION #  1 USED)<<<<<
============================================================================
  UPSTREAM ELEVATION(FEET) =  871.00  DOWNSTREAM ELEVATION(FEET) =  867.00
  STREET LENGTH(FEET) =   305.00   CURB HEIGHT(INCHES) =  4.0
  STREET HALFWIDTH(FEET) = 16.00

  DISTANCE FROM CROWN TO CROSSFALL GRADEBREAK(FEET) =   8.00
  INSIDE STREET CROSSFALL(DECIMAL) =  0.020
  OUTSIDE STREET CROSSFALL(DECIMAL)  =  0.020

  SPECIFIED NUMBER OF HALFSTREETS CARRYING RUNOFF =  1
  STREET PARKWAY CROSSFALL(DECIMAL)  =  0.020
  Manning's FRICTION FACTOR for Streetflow Section(curb-to-curb) =   0.0150
  Manning's FRICTION FACTOR for Back-of-Walk Flow Section =   0.0150

    **TRAVEL TIME COMPUTED USING ESTIMATED FLOW(CFS) =       6.77
    STREETFLOW MODEL RESULTS USING ESTIMATED FLOW:
    STREET FLOW DEPTH(FEET) =  0.31
    HALFSTREET FLOOD WIDTH(FEET) =   14.72
    AVERAGE FLOW VELOCITY(FEET/SEC.) =    3.12
    PRODUCT OF DEPTH&VELOCITY(FT*FT/SEC.) =    0.98
  STREET FLOW TRAVEL TIME(MIN.) =   1.63   Tc(MIN.) =    6.61
   100 YEAR RAINFALL INTENSITY(INCH/HOUR) =  7.041
  *USER SPECIFIED(SUBAREA):
  USER-SPECIFIED RUNOFF COEFFICIENT = .7100
  S.C.S. CURVE NUMBER (AMC II) =   0
  AREA-AVERAGE RUNOFF COEFFICIENT =  0.710
  SUBAREA AREA(ACRES) =    2.17      SUBAREA RUNOFF(CFS) =   10.85
```

```
  TOTAL AREA(ACRES) =        2.4        PEAK FLOW RATE(CFS) =      11.95

  END OF SUBAREA STREET FLOW HYDRAULICS:
  DEPTH(FEET) = 0.34   HALFSTREET FLOOD WIDTH(FEET) =  16.23
  FLOW VELOCITY(FEET/SEC.) =  3.30   DEPTH*VELOCITY(FT*FT/SEC.) =   1.11
  *NOTE: INITIAL SUBAREA NOMOGRAPH WITH SUBAREA PARAMETERS,
         AND L =  305.0 FT WITH ELEVATION-DROP =   4.0 FT, IS   12.4 CFS,
         WHICH EXCEEDS THE TOP-OF-CURB STREET CAPACITY AT NODE    214.00
  LONGEST FLOWPATH FROM NODE    212.00 TO NODE    214.00 =     455.00 FEET.

****************************************************************************
  FLOW PROCESS FROM NODE    214.00 TO NODE    215.00 IS CODE =  31
----------------------------------------------------------------------------
  >>>>>COMPUTE PIPE-FLOW TRAVEL TIME THRU SUBAREA<<<<<
  >>>>>USING COMPUTER-ESTIMATED PIPESIZE (NON-PRESSURE FLOW)<<<<<
============================================================================
  ELEVATION DATA: UPSTREAM(FEET) =   861.00  DOWNSTREAM(FEET) =   860.50
  FLOW LENGTH(FEET) =    45.00   MANNING'S N =  0.030
  DEPTH OF FLOW IN  27.0 INCH PIPE IS  19.8 INCHES
  PIPE-FLOW VELOCITY(FEET/SEC.) =   3.82
  ESTIMATED PIPE DIAMETER(INCH) =  27.00    NUMBER OF PIPES =   1
  PIPE-FLOW(CFS) =      11.95
  PIPE TRAVEL TIME(MIN.) =   0.20    Tc(MIN.) =    6.81
  LONGEST FLOWPATH FROM NODE    212.00 TO NODE    215.00 =     500.00 FEET.

****************************************************************************
  FLOW PROCESS FROM NODE    215.00 TO NODE    215.00 IS CODE =   1
----------------------------------------------------------------------------
  >>>>>DESIGNATE INDEPENDENT STREAM FOR CONFLUENCE<<<<<
============================================================================
  TOTAL NUMBER OF STREAMS =  2
  CONFLUENCE VALUES USED FOR INDEPENDENT STREAM  1 ARE:
  TIME OF CONCENTRATION(MIN.) =    6.81
  RAINFALL INTENSITY(INCH/HR) =   6.91
  TOTAL STREAM AREA(ACRES) =     2.39
  PEAK FLOW RATE(CFS) AT CONFLUENCE =     11.95

****************************************************************************
  FLOW PROCESS FROM NODE    216.00 TO NODE    217.00 IS CODE =  21
----------------------------------------------------------------------------
  >>>>>RATIONAL METHOD INITIAL SUBAREA ANALYSIS<<<<<
============================================================================
  *USER SPECIFIED(SUBAREA):
  USER-SPECIFIED RUNOFF COEFFICIENT = .7100
  S.C.S. CURVE NUMBER (AMC II) =   0
  INITIAL SUBAREA FLOW-LENGTH(FEET) =   100.00
  UPSTREAM ELEVATION(FEET) =    882.00
  DOWNSTREAM ELEVATION(FEET) =    880.00
  ELEVATION DIFFERENCE(FEET) =      2.00
  SUBAREA OVERLAND TIME OF FLOW(MIN.) =    4.984
  WARNING: INITIAL SUBAREA FLOW PATH LENGTH IS GREATER THAN
           THE MAXIMUM OVERLAND FLOW LENGTH =    80.00
           (Reference: Table 3-1B of Hydrology Manual)
           THE MAXIMUM OVERLAND FLOW LENGTH IS USED IN Tc CALCULATION!
   100 YEAR RAINFALL INTENSITY(INCH/HOUR) =  8.431
  NOTE: RAINFALL INTENSITY IS BASED ON Tc = 5-MINUTE.
  SUBAREA RUNOFF(CFS) =      0.54
  TOTAL AREA(ACRES) =      0.09   TOTAL RUNOFF(CFS) =      0.54

****************************************************************************
  FLOW PROCESS FROM NODE    217.00 TO NODE    218.00 IS CODE =  62
----------------------------------------------------------------------------
  >>>>>COMPUTE STREET FLOW TRAVEL TIME THRU SUBAREA<<<<<
```

```
  >>>>>(STREET TABLE SECTION #  1 USED)<<<<<
==============================================================================
  UPSTREAM ELEVATION(FEET) =  880.00  DOWNSTREAM ELEVATION(FEET) =  867.00
  STREET LENGTH(FEET) =   650.00   CURB HEIGHT(INCHES) =  4.0
  STREET HALFWIDTH(FEET) = 16.00

  DISTANCE FROM CROWN TO CROSSFALL GRADEBREAK(FEET) =   8.00
  INSIDE STREET CROSSFALL(DECIMAL) =  0.020
  OUTSIDE STREET CROSSFALL(DECIMAL)  =  0.020

  SPECIFIED NUMBER OF HALFSTREETS CARRYING RUNOFF =  1
  STREET PARKWAY CROSSFALL(DECIMAL)  =  0.020
  Manning's FRICTION FACTOR for Streetflow Section(curb-to-curb) =   0.0150
  Manning's FRICTION FACTOR for Back-of-Walk Flow Section =   0.0150

    **TRAVEL TIME COMPUTED USING ESTIMATED FLOW(CFS) =       6.22
    STREETFLOW MODEL RESULTS USING ESTIMATED FLOW:
    STREET FLOW DEPTH(FEET) =  0.28
    HALFSTREET FLOOD WIDTH(FEET) =   13.16
    AVERAGE FLOW VELOCITY(FEET/SEC.) =    3.59
    PRODUCT OF DEPTH&VELOCITY(FT*FT/SEC.) =    1.01
  STREET FLOW TRAVEL TIME(MIN.) =   3.02   Tc(MIN.) =    8.00
   100 YEAR RAINFALL INTENSITY(INCH/HOUR) =  6.226
  *USER SPECIFIED(SUBAREA):
  USER-SPECIFIED RUNOFF COEFFICIENT = .7100
  S.C.S. CURVE NUMBER (AMC II) =   0
  AREA-AVERAGE RUNOFF COEFFICIENT =  0.710
  SUBAREA AREA(ACRES) =    2.53      SUBAREA RUNOFF(CFS) =   11.18
  TOTAL AREA(ACRES) =        2.6        PEAK FLOW RATE(CFS) =      11.58

  END OF SUBAREA STREET FLOW HYDRAULICS:
  DEPTH(FEET) = 0.34   HALFSTREET FLOOD WIDTH(FEET) =  16.23
  FLOW VELOCITY(FEET/SEC.) =  4.07   DEPTH*VELOCITY(FT*FT/SEC.) =   1.38
  *NOTE: INITIAL SUBAREA NOMOGRAPH WITH SUBAREA PARAMETERS,
         AND L =  650.0 FT WITH ELEVATION-DROP =  13.0 FT, IS   15.1 CFS,
         WHICH EXCEEDS THE TOP-OF-CURB STREET CAPACITY AT NODE    218.00
  LONGEST FLOWPATH FROM NODE    216.00 TO NODE    218.00 =     750.00 FEET.

****************************************************************************
  FLOW PROCESS FROM NODE    218.00 TO NODE    215.00 IS CODE =  31
----------------------------------------------------------------------------
  >>>>>COMPUTE PIPE-FLOW TRAVEL TIME THRU SUBAREA<<<<<
  >>>>>USING COMPUTER-ESTIMATED PIPESIZE (NON-PRESSURE FLOW)<<<<<
==============================================================================
  ELEVATION DATA: UPSTREAM(FEET) =   860.50  DOWNSTREAM(FEET) =   859.90
  FLOW LENGTH(FEET) =    60.00   MANNING'S N =  0.013
  DEPTH OF FLOW IN  21.0 INCH PIPE IS  13.8 INCHES
  PIPE-FLOW VELOCITY(FEET/SEC.) =   6.89
  ESTIMATED PIPE DIAMETER(INCH) =  21.00    NUMBER OF PIPES =   1
  PIPE-FLOW(CFS) =      11.58
  PIPE TRAVEL TIME(MIN.) =   0.15    Tc(MIN.) =    8.15
  LONGEST FLOWPATH FROM NODE    216.00 TO NODE    215.00 =     810.00 FEET.

****************************************************************************
  FLOW PROCESS FROM NODE    215.00 TO NODE    215.00 IS CODE =   1
----------------------------------------------------------------------------
  >>>>>DESIGNATE INDEPENDENT STREAM FOR CONFLUENCE<<<<<
  >>>>>AND COMPUTE VARIOUS CONFLUENCED STREAM VALUES<<<<<
==============================================================================
  TOTAL NUMBER OF STREAMS =  2
  CONFLUENCE VALUES USED FOR INDEPENDENT STREAM  2 ARE:
  TIME OF CONCENTRATION(MIN.) =    8.15
  RAINFALL INTENSITY(INCH/HR) =   6.15
```

```
  TOTAL STREAM AREA(ACRES) =     2.62
  PEAK FLOW RATE(CFS) AT CONFLUENCE =     11.58

  ** CONFLUENCE DATA **
  STREAM     RUNOFF       Tc      INTENSITY      AREA
  NUMBER      (CFS)     (MIN.)   (INCH/HOUR)    (ACRE)
      1       11.95     6.81        6.909          2.39
      2       11.58     8.15        6.154          2.62

  RAINFALL INTENSITY AND TIME OF CONCENTRATION RATIO
  CONFLUENCE FORMULA USED FOR  2 STREAMS.

  ** PEAK FLOW RATE TABLE **
  STREAM     RUNOFF      Tc      INTENSITY
  NUMBER      (CFS)    (MIN.)   (INCH/HOUR)
      1       21.63     6.81       6.909
      2       22.22     8.15       6.154

  COMPUTED CONFLUENCE ESTIMATES ARE AS FOLLOWS:
  PEAK FLOW RATE(CFS) =      22.22   Tc(MIN.) =    8.15
  TOTAL AREA(ACRES) =        5.0
  LONGEST FLOWPATH FROM NODE    216.00 TO NODE    215.00 =     810.00 FEET.

****************************************************************************
  FLOW PROCESS FROM NODE    215.00 TO NODE    225.00 IS CODE =  31
----------------------------------------------------------------------------
  >>>>>COMPUTE PIPE-FLOW TRAVEL TIME THRU SUBAREA<<<<<
  >>>>>USING COMPUTER-ESTIMATED PIPESIZE (NON-PRESSURE FLOW)<<<<<
============================================================================
  ELEVATION DATA: UPSTREAM(FEET) =   859.90  DOWNSTREAM(FEET) =   804.00
  FLOW LENGTH(FEET) =   425.00   MANNING'S N =  0.013
  DEPTH OF FLOW IN  15.0 INCH PIPE IS  12.3 INCHES
  PIPE-FLOW VELOCITY(FEET/SEC.) =  20.65
  ESTIMATED PIPE DIAMETER(INCH) =  15.00    NUMBER OF PIPES =   1
  PIPE-FLOW(CFS) =      22.22
  PIPE TRAVEL TIME(MIN.) =   0.34    Tc(MIN.) =    8.49
  LONGEST FLOWPATH FROM NODE    216.00 TO NODE    225.00 =    1235.00 FEET.

****************************************************************************
  FLOW PROCESS FROM NODE    225.00 TO NODE    225.00 IS CODE =   1
----------------------------------------------------------------------------
  >>>>>DESIGNATE INDEPENDENT STREAM FOR CONFLUENCE<<<<<
============================================================================
  TOTAL NUMBER OF STREAMS =  3
  CONFLUENCE VALUES USED FOR INDEPENDENT STREAM  1 ARE:
  TIME OF CONCENTRATION(MIN.) =    8.49
  RAINFALL INTENSITY(INCH/HR) =   5.99
  TOTAL STREAM AREA(ACRES) =     5.01
  PEAK FLOW RATE(CFS) AT CONFLUENCE =     22.22

****************************************************************************
  FLOW PROCESS FROM NODE    220.00 TO NODE    221.00 IS CODE =  21
----------------------------------------------------------------------------
  >>>>>RATIONAL METHOD INITIAL SUBAREA ANALYSIS<<<<<
============================================================================
  *USER SPECIFIED(SUBAREA):
  USER-SPECIFIED RUNOFF COEFFICIENT = .7100
  S.C.S. CURVE NUMBER (AMC II) =   0
  INITIAL SUBAREA FLOW-LENGTH(FEET) =   100.00
  UPSTREAM ELEVATION(FEET) =    870.30
  DOWNSTREAM ELEVATION(FEET) =    868.30
  ELEVATION DIFFERENCE(FEET) =      2.00
  SUBAREA OVERLAND TIME OF FLOW(MIN.) =    4.984
```

```
  WARNING: INITIAL SUBAREA FLOW PATH LENGTH IS GREATER THAN
           THE MAXIMUM OVERLAND FLOW LENGTH =    80.00
           (Reference: Table 3-1B of Hydrology Manual)
           THE MAXIMUM OVERLAND FLOW LENGTH IS USED IN Tc CALCULATION!
   100 YEAR RAINFALL INTENSITY(INCH/HOUR) =  8.431
  NOTE: RAINFALL INTENSITY IS BASED ON Tc = 5-MINUTE.
  SUBAREA RUNOFF(CFS) =      1.68
  TOTAL AREA(ACRES) =      0.28   TOTAL RUNOFF(CFS) =      1.68

****************************************************************************
  FLOW PROCESS FROM NODE    221.00 TO NODE    219.00 IS CODE =  62
----------------------------------------------------------------------------
  >>>>>COMPUTE STREET FLOW TRAVEL TIME THRU SUBAREA<<<<<
  >>>>>(STREET TABLE SECTION #  1 USED)<<<<<
============================================================================
  UPSTREAM ELEVATION(FEET) =  866.00  DOWNSTREAM ELEVATION(FEET) =  810.00
  STREET LENGTH(FEET) =   460.00   CURB HEIGHT(INCHES) =  4.0
  STREET HALFWIDTH(FEET) = 16.00

  DISTANCE FROM CROWN TO CROSSFALL GRADEBREAK(FEET) =   8.00
  INSIDE STREET CROSSFALL(DECIMAL) =  0.020
  OUTSIDE STREET CROSSFALL(DECIMAL)  =  0.020

  SPECIFIED NUMBER OF HALFSTREETS CARRYING RUNOFF =  1
  STREET PARKWAY CROSSFALL(DECIMAL)  =  0.020
  Manning's FRICTION FACTOR for Streetflow Section(curb-to-curb) =   0.0150
  Manning's FRICTION FACTOR for Back-of-Walk Flow Section =   0.0150

    **TRAVEL TIME COMPUTED USING ESTIMATED FLOW(CFS) =       5.58
    STREETFLOW MODEL RESULTS USING ESTIMATED FLOW:
    STREET FLOW DEPTH(FEET) =  0.20
    HALFSTREET FLOOD WIDTH(FEET) =    9.03
    AVERAGE FLOW VELOCITY(FEET/SEC.) =    6.83
    PRODUCT OF DEPTH&VELOCITY(FT*FT/SEC.) =    1.36
  STREET FLOW TRAVEL TIME(MIN.) =   1.12   Tc(MIN.) =    6.11
   100 YEAR RAINFALL INTENSITY(INCH/HOUR) =  7.411
  *USER SPECIFIED(SUBAREA):
  USER-SPECIFIED RUNOFF COEFFICIENT = .7100
  S.C.S. CURVE NUMBER (AMC II) =   0
  AREA-AVERAGE RUNOFF COEFFICIENT =  0.710
  SUBAREA AREA(ACRES) =    1.48      SUBAREA RUNOFF(CFS) =    7.79
  TOTAL AREA(ACRES) =        1.8        PEAK FLOW RATE(CFS) =       9.26

  END OF SUBAREA STREET FLOW HYDRAULICS:
  DEPTH(FEET) = 0.24   HALFSTREET FLOOD WIDTH(FEET) =  10.91
  FLOW VELOCITY(FEET/SEC.) =  7.78   DEPTH*VELOCITY(FT*FT/SEC.) =   1.84
  LONGEST FLOWPATH FROM NODE    220.00 TO NODE    219.00 =     560.00 FEET.

****************************************************************************
  FLOW PROCESS FROM NODE    219.00 TO NODE    225.00 IS CODE =  31
----------------------------------------------------------------------------
  >>>>>COMPUTE PIPE-FLOW TRAVEL TIME THRU SUBAREA<<<<<
  >>>>>USING COMPUTER-ESTIMATED PIPESIZE (NON-PRESSURE FLOW)<<<<<
============================================================================
  ELEVATION DATA: UPSTREAM(FEET) =   804.50  DOWNSTREAM(FEET) =   804.00
  FLOW LENGTH(FEET) =    25.00   MANNING'S N =  0.013
  DEPTH OF FLOW IN  18.0 INCH PIPE IS  10.6 INCHES
  PIPE-FLOW VELOCITY(FEET/SEC.) =   8.51
  ESTIMATED PIPE DIAMETER(INCH) =  18.00    NUMBER OF PIPES =   1
  PIPE-FLOW(CFS) =       9.26
  PIPE TRAVEL TIME(MIN.) =   0.05    Tc(MIN.) =    6.16
  LONGEST FLOWPATH FROM NODE    220.00 TO NODE    225.00 =     585.00 FEET.
```

```
****************************************************************************
  FLOW PROCESS FROM NODE    225.00 TO NODE    225.00 IS CODE =   1
----------------------------------------------------------------------------
  >>>>>DESIGNATE INDEPENDENT STREAM FOR CONFLUENCE<<<<<
============================================================================
  TOTAL NUMBER OF STREAMS =  3
  CONFLUENCE VALUES USED FOR INDEPENDENT STREAM  2 ARE:
  TIME OF CONCENTRATION(MIN.) =    6.16
  RAINFALL INTENSITY(INCH/HR) =   7.37
  TOTAL STREAM AREA(ACRES) =     1.76
  PEAK FLOW RATE(CFS) AT CONFLUENCE =      9.26

****************************************************************************
  FLOW PROCESS FROM NODE    223.00 TO NODE    224.00 IS CODE =  21
----------------------------------------------------------------------------
  >>>>>RATIONAL METHOD INITIAL SUBAREA ANALYSIS<<<<<
============================================================================
  *USER SPECIFIED(SUBAREA):
  USER-SPECIFIED RUNOFF COEFFICIENT = .7100
  S.C.S. CURVE NUMBER (AMC II) =   0
  INITIAL SUBAREA FLOW-LENGTH(FEET) =   100.00
  UPSTREAM ELEVATION(FEET) =    841.00
  DOWNSTREAM ELEVATION(FEET) =    839.00
  ELEVATION DIFFERENCE(FEET) =      2.00
  SUBAREA OVERLAND TIME OF FLOW(MIN.) =    4.984
  WARNING: INITIAL SUBAREA FLOW PATH LENGTH IS GREATER THAN
           THE MAXIMUM OVERLAND FLOW LENGTH =    80.00
           (Reference: Table 3-1B of Hydrology Manual)
           THE MAXIMUM OVERLAND FLOW LENGTH IS USED IN Tc CALCULATION!
   100 YEAR RAINFALL INTENSITY(INCH/HOUR) =  8.431
  NOTE: RAINFALL INTENSITY IS BASED ON Tc = 5-MINUTE.
  SUBAREA RUNOFF(CFS) =      2.33
  TOTAL AREA(ACRES) =      0.39   TOTAL RUNOFF(CFS) =      2.33

****************************************************************************
  FLOW PROCESS FROM NODE    224.00 TO NODE    225.00 IS CODE =  62
----------------------------------------------------------------------------
  >>>>>COMPUTE STREET FLOW TRAVEL TIME THRU SUBAREA<<<<<
  >>>>>(STREET TABLE SECTION #  1 USED)<<<<<
============================================================================
  UPSTREAM ELEVATION(FEET) =  839.00  DOWNSTREAM ELEVATION(FEET) =  810.00
  STREET LENGTH(FEET) =   310.00   CURB HEIGHT(INCHES) =  4.0
  STREET HALFWIDTH(FEET) = 16.00

  DISTANCE FROM CROWN TO CROSSFALL GRADEBREAK(FEET) =   8.00
  INSIDE STREET CROSSFALL(DECIMAL) =  0.020
  OUTSIDE STREET CROSSFALL(DECIMAL)  =  0.020

  SPECIFIED NUMBER OF HALFSTREETS CARRYING RUNOFF =  2
  STREET PARKWAY CROSSFALL(DECIMAL)  =  0.020
  Manning's FRICTION FACTOR for Streetflow Section(curb-to-curb) =   0.0150
  Manning's FRICTION FACTOR for Back-of-Walk Flow Section =   0.0150

    **TRAVEL TIME COMPUTED USING ESTIMATED FLOW(CFS) =       9.99
    STREETFLOW MODEL RESULTS USING ESTIMATED FLOW:
    STREET FLOW DEPTH(FEET) =  0.20
    HALFSTREET FLOOD WIDTH(FEET) =    9.09
    AVERAGE FLOW VELOCITY(FEET/SEC.) =    6.03
    PRODUCT OF DEPTH&VELOCITY(FT*FT/SEC.) =    1.20
  STREET FLOW TRAVEL TIME(MIN.) =   0.86   Tc(MIN.) =    5.84
   100 YEAR RAINFALL INTENSITY(INCH/HOUR) =  7.627
  *USER SPECIFIED(SUBAREA):
  USER-SPECIFIED RUNOFF COEFFICIENT = .7100
```

```
  S.C.S. CURVE NUMBER (AMC II) =   0
  AREA-AVERAGE RUNOFF COEFFICIENT =  0.710
  SUBAREA AREA(ACRES) =    2.82      SUBAREA RUNOFF(CFS) =   15.27
  TOTAL AREA(ACRES) =        3.2        PEAK FLOW RATE(CFS) =      17.38

  END OF SUBAREA STREET FLOW HYDRAULICS:
  DEPTH(FEET) = 0.24   HALFSTREET FLOOD WIDTH(FEET) =  11.22
  FLOW VELOCITY(FEET/SEC.) =  6.90   DEPTH*VELOCITY(FT*FT/SEC.) =   1.67
  LONGEST FLOWPATH FROM NODE    223.00 TO NODE    225.00 =     410.00 FEET.

****************************************************************************
  FLOW PROCESS FROM NODE    225.00 TO NODE    225.00 IS CODE =   1
----------------------------------------------------------------------------
  >>>>>DESIGNATE INDEPENDENT STREAM FOR CONFLUENCE<<<<<
  >>>>>AND COMPUTE VARIOUS CONFLUENCED STREAM VALUES<<<<<
============================================================================
  TOTAL NUMBER OF STREAMS =  3
  CONFLUENCE VALUES USED FOR INDEPENDENT STREAM  3 ARE:
  TIME OF CONCENTRATION(MIN.) =    5.84
  RAINFALL INTENSITY(INCH/HR) =   7.63
  TOTAL STREAM AREA(ACRES) =     3.21
  PEAK FLOW RATE(CFS) AT CONFLUENCE =     17.38

  ** CONFLUENCE DATA **
  STREAM     RUNOFF       Tc      INTENSITY      AREA
  NUMBER      (CFS)     (MIN.)   (INCH/HOUR)    (ACRE)
      1       22.22     8.49        5.993          5.01
      2        9.26     6.16        7.373          1.76
      3       17.38     5.84        7.627          3.21

  RAINFALL INTENSITY AND TIME OF CONCENTRATION RATIO
  CONFLUENCE FORMULA USED FOR  3 STREAMS.

  ** PEAK FLOW RATE TABLE **
  STREAM     RUNOFF      Tc      INTENSITY
  NUMBER      (CFS)    (MIN.)   (INCH/HOUR)
      1       43.63     5.84       7.627
      2       44.13     6.16       7.373
      3       43.41     8.49       5.993

  COMPUTED CONFLUENCE ESTIMATES ARE AS FOLLOWS:
  PEAK FLOW RATE(CFS) =      44.13   Tc(MIN.) =    6.16
  TOTAL AREA(ACRES) =       10.0
  LONGEST FLOWPATH FROM NODE    216.00 TO NODE    225.00 =    1235.00 FEET.

****************************************************************************
  FLOW PROCESS FROM NODE    225.00 TO NODE    226.00 IS CODE =  31
----------------------------------------------------------------------------
  >>>>>COMPUTE PIPE-FLOW TRAVEL TIME THRU SUBAREA<<<<<
  >>>>>USING COMPUTER-ESTIMATED PIPESIZE (NON-PRESSURE FLOW)<<<<<
============================================================================
  ELEVATION DATA: UPSTREAM(FEET) =   804.00  DOWNSTREAM(FEET) =   784.80
  FLOW LENGTH(FEET) =   310.00   MANNING'S N =  0.013
  DEPTH OF FLOW IN  24.0 INCH PIPE IS  16.6 INCHES
  PIPE-FLOW VELOCITY(FEET/SEC.) =  19.00
  ESTIMATED PIPE DIAMETER(INCH) =  24.00    NUMBER OF PIPES =   1
  PIPE-FLOW(CFS) =      44.13
  PIPE TRAVEL TIME(MIN.) =   0.27    Tc(MIN.) =    6.43
  LONGEST FLOWPATH FROM NODE    216.00 TO NODE    226.00 =    1545.00 FEET.

****************************************************************************
  FLOW PROCESS FROM NODE    226.00 TO NODE    226.00 IS CODE =   1
----------------------------------------------------------------------------
```

```
  >>>>>DESIGNATE INDEPENDENT STREAM FOR CONFLUENCE<<<<<
==============================================================================
  TOTAL NUMBER OF STREAMS =  3
  CONFLUENCE VALUES USED FOR INDEPENDENT STREAM  1 ARE:
  TIME OF CONCENTRATION(MIN.) =    6.43
  RAINFALL INTENSITY(INCH/HR) =   7.17
  TOTAL STREAM AREA(ACRES) =     9.98
  PEAK FLOW RATE(CFS) AT CONFLUENCE =     44.13

****************************************************************************
  FLOW PROCESS FROM NODE    209.00 TO NODE    222.40 IS CODE =  21
----------------------------------------------------------------------------
  >>>>>RATIONAL METHOD INITIAL SUBAREA ANALYSIS<<<<<
==============================================================================
  *USER SPECIFIED(SUBAREA):
  USER-SPECIFIED RUNOFF COEFFICIENT = .7100
  S.C.S. CURVE NUMBER (AMC II) =   0
  INITIAL SUBAREA FLOW-LENGTH(FEET) =    65.00
  UPSTREAM ELEVATION(FEET) =    810.00
  DOWNSTREAM ELEVATION(FEET) =    800.00
  ELEVATION DIFFERENCE(FEET) =     10.00
  SUBAREA OVERLAND TIME OF FLOW(MIN.) =    2.627
  WARNING: THE MAXIMUM OVERLAND FLOW SLOPE, 10.%, IS USED IN Tc CALCULATION!
   100 YEAR RAINFALL INTENSITY(INCH/HOUR) =  8.431
  NOTE: RAINFALL INTENSITY IS BASED ON Tc = 5-MINUTE.
  SUBAREA RUNOFF(CFS) =      0.54
  TOTAL AREA(ACRES) =      0.09   TOTAL RUNOFF(CFS) =      0.54

****************************************************************************
  FLOW PROCESS FROM NODE    222.40 TO NODE    222.20 IS CODE =  62
----------------------------------------------------------------------------
  >>>>>COMPUTE STREET FLOW TRAVEL TIME THRU SUBAREA<<<<<
  >>>>>(STREET TABLE SECTION #  1 USED)<<<<<
==============================================================================
  UPSTREAM ELEVATION(FEET) =  800.00  DOWNSTREAM ELEVATION(FEET) =  791.00
  STREET LENGTH(FEET) =   230.00   CURB HEIGHT(INCHES) =  4.0
  STREET HALFWIDTH(FEET) = 16.00

  DISTANCE FROM CROWN TO CROSSFALL GRADEBREAK(FEET) =   8.00
  INSIDE STREET CROSSFALL(DECIMAL) =  0.020
  OUTSIDE STREET CROSSFALL(DECIMAL)  =  0.020

  SPECIFIED NUMBER OF HALFSTREETS CARRYING RUNOFF =  1
  STREET PARKWAY CROSSFALL(DECIMAL)  =  0.020
  Manning's FRICTION FACTOR for Streetflow Section(curb-to-curb) =   0.0150
  Manning's FRICTION FACTOR for Back-of-Walk Flow Section =   0.0150

    **TRAVEL TIME COMPUTED USING ESTIMATED FLOW(CFS) =       2.84
    STREETFLOW MODEL RESULTS USING ESTIMATED FLOW:
    STREET FLOW DEPTH(FEET) =  0.19
    HALFSTREET FLOOD WIDTH(FEET) =    8.66
    AVERAGE FLOW VELOCITY(FEET/SEC.) =    3.79
    PRODUCT OF DEPTH&VELOCITY(FT*FT/SEC.) =    0.72
  STREET FLOW TRAVEL TIME(MIN.) =   1.01   Tc(MIN.) =    3.64
   100 YEAR RAINFALL INTENSITY(INCH/HOUR) =  8.431
  NOTE: RAINFALL INTENSITY IS BASED ON Tc = 5-MINUTE.
  *USER SPECIFIED(SUBAREA):
  USER-SPECIFIED RUNOFF COEFFICIENT = .7100
  S.C.S. CURVE NUMBER (AMC II) =   0
  AREA-AVERAGE RUNOFF COEFFICIENT =  0.710
  SUBAREA AREA(ACRES) =    0.77      SUBAREA RUNOFF(CFS) =    4.61
  TOTAL AREA(ACRES) =        0.9        PEAK FLOW RATE(CFS) =       5.15
```

```
  END OF SUBAREA STREET FLOW HYDRAULICS:
  DEPTH(FEET) = 0.23   HALFSTREET FLOOD WIDTH(FEET) =  10.84
  FLOW VELOCITY(FEET/SEC.) =  4.37   DEPTH*VELOCITY(FT*FT/SEC.) =   1.03
  LONGEST FLOWPATH FROM NODE    209.00 TO NODE    222.20 =     295.00 FEET.

****************************************************************************
  FLOW PROCESS FROM NODE    229.00 TO NODE    226.00 IS CODE =  31
----------------------------------------------------------------------------
  >>>>>COMPUTE PIPE-FLOW TRAVEL TIME THRU SUBAREA<<<<<
  >>>>>USING COMPUTER-ESTIMATED PIPESIZE (NON-PRESSURE FLOW)<<<<<
============================================================================
  ELEVATION DATA: UPSTREAM(FEET) =   785.00  DOWNSTREAM(FEET) =   784.80
  FLOW LENGTH(FEET) =    10.00   MANNING'S N =  0.013
  DEPTH OF FLOW IN  15.0 INCH PIPE IS   8.3 INCHES
  PIPE-FLOW VELOCITY(FEET/SEC.) =   7.36
  ESTIMATED PIPE DIAMETER(INCH) =  15.00    NUMBER OF PIPES =   1
  PIPE-FLOW(CFS) =       5.15
  PIPE TRAVEL TIME(MIN.) =   0.02    Tc(MIN.) =    3.66
  LONGEST FLOWPATH FROM NODE    209.00 TO NODE    226.00 =     305.00 FEET.

****************************************************************************
  FLOW PROCESS FROM NODE    226.00 TO NODE    226.00 IS CODE =   1
----------------------------------------------------------------------------
  >>>>>DESIGNATE INDEPENDENT STREAM FOR CONFLUENCE<<<<<
============================================================================
  TOTAL NUMBER OF STREAMS =  3
  CONFLUENCE VALUES USED FOR INDEPENDENT STREAM  2 ARE:
  TIME OF CONCENTRATION(MIN.) =    3.66
  RAINFALL INTENSITY(INCH/HR) =   8.43
  TOTAL STREAM AREA(ACRES) =     0.86
  PEAK FLOW RATE(CFS) AT CONFLUENCE =      5.15

****************************************************************************
  FLOW PROCESS FROM NODE    227.00 TO NODE    232.00 IS CODE =  21
----------------------------------------------------------------------------
  >>>>>RATIONAL METHOD INITIAL SUBAREA ANALYSIS<<<<<
============================================================================
  *USER SPECIFIED(SUBAREA):
  USER-SPECIFIED RUNOFF COEFFICIENT = .7100
  S.C.S. CURVE NUMBER (AMC II) =   0
  INITIAL SUBAREA FLOW-LENGTH(FEET) =    80.00
  UPSTREAM ELEVATION(FEET) =    804.40
  DOWNSTREAM ELEVATION(FEET) =    802.80
  ELEVATION DIFFERENCE(FEET) =      1.60
  SUBAREA OVERLAND TIME OF FLOW(MIN.) =    4.984
   100 YEAR RAINFALL INTENSITY(INCH/HOUR) =  8.431
  NOTE: RAINFALL INTENSITY IS BASED ON Tc = 5-MINUTE.
  SUBAREA RUNOFF(CFS) =      1.44
  TOTAL AREA(ACRES) =      0.24   TOTAL RUNOFF(CFS) =      1.44

****************************************************************************
  FLOW PROCESS FROM NODE    232.00 TO NODE    226.00 IS CODE =  62
----------------------------------------------------------------------------
  >>>>>COMPUTE STREET FLOW TRAVEL TIME THRU SUBAREA<<<<<
  >>>>>(STREET TABLE SECTION #  1 USED)<<<<<
============================================================================
  UPSTREAM ELEVATION(FEET) =  803.00  DOWNSTREAM ELEVATION(FEET) =  790.00
  STREET LENGTH(FEET) =   240.00   CURB HEIGHT(INCHES) =  4.0
  STREET HALFWIDTH(FEET) = 16.00

  DISTANCE FROM CROWN TO CROSSFALL GRADEBREAK(FEET) =   8.00
  INSIDE STREET CROSSFALL(DECIMAL) =  0.020
  OUTSIDE STREET CROSSFALL(DECIMAL)  =  0.020
```

```
  SPECIFIED NUMBER OF HALFSTREETS CARRYING RUNOFF =  1
  STREET PARKWAY CROSSFALL(DECIMAL)  =  0.020
  Manning's FRICTION FACTOR for Streetflow Section(curb-to-curb) =   0.0150
  Manning's FRICTION FACTOR for Back-of-Walk Flow Section =   0.0150

    **TRAVEL TIME COMPUTED USING ESTIMATED FLOW(CFS) =       2.00
    STREETFLOW MODEL RESULTS USING ESTIMATED FLOW:
    STREET FLOW DEPTH(FEET) =  0.16
    HALFSTREET FLOOD WIDTH(FEET) =    7.11
    AVERAGE FLOW VELOCITY(FEET/SEC.) =    3.94
    PRODUCT OF DEPTH&VELOCITY(FT*FT/SEC.) =    0.63
  STREET FLOW TRAVEL TIME(MIN.) =   1.01   Tc(MIN.) =    6.00
   100 YEAR RAINFALL INTENSITY(INCH/HOUR) =  7.497
  *USER SPECIFIED(SUBAREA):
  USER-SPECIFIED RUNOFF COEFFICIENT = .7100
  S.C.S. CURVE NUMBER (AMC II) =   0
  AREA-AVERAGE RUNOFF COEFFICIENT =  0.710
  SUBAREA AREA(ACRES) =    0.21      SUBAREA RUNOFF(CFS) =    1.12
  TOTAL AREA(ACRES) =        0.4        PEAK FLOW RATE(CFS) =       2.40

  END OF SUBAREA STREET FLOW HYDRAULICS:
  DEPTH(FEET) = 0.17   HALFSTREET FLOOD WIDTH(FEET) =   7.66
  FLOW VELOCITY(FEET/SEC.) =  4.07   DEPTH*VELOCITY(FT*FT/SEC.) =   0.70
  LONGEST FLOWPATH FROM NODE    227.00 TO NODE    226.00 =     320.00 FEET.

****************************************************************************
  FLOW PROCESS FROM NODE    226.00 TO NODE    226.00 IS CODE =   1
----------------------------------------------------------------------------
  >>>>>DESIGNATE INDEPENDENT STREAM FOR CONFLUENCE<<<<<
  >>>>>AND COMPUTE VARIOUS CONFLUENCED STREAM VALUES<<<<<
============================================================================
  TOTAL NUMBER OF STREAMS =  3
  CONFLUENCE VALUES USED FOR INDEPENDENT STREAM  3 ARE:
  TIME OF CONCENTRATION(MIN.) =    6.00
  RAINFALL INTENSITY(INCH/HR) =   7.50
  TOTAL STREAM AREA(ACRES) =     0.45
  PEAK FLOW RATE(CFS) AT CONFLUENCE =      2.40

  ** CONFLUENCE DATA **
  STREAM     RUNOFF       Tc      INTENSITY      AREA
  NUMBER      (CFS)     (MIN.)   (INCH/HOUR)    (ACRE)
      1       44.13     6.43        7.171          9.98
      2        5.15     3.66        8.431          0.86
      3        2.40     6.00        7.497          0.45

  RAINFALL INTENSITY AND TIME OF CONCENTRATION RATIO
  CONFLUENCE FORMULA USED FOR  3 STREAMS.

  ** PEAK FLOW RATE TABLE **
  STREAM     RUNOFF      Tc      INTENSITY
  NUMBER      (CFS)    (MIN.)   (INCH/HOUR)
      1       44.14     3.66       8.431
      2       49.18     6.00       7.497
      3       50.80     6.43       7.171

  COMPUTED CONFLUENCE ESTIMATES ARE AS FOLLOWS:
  PEAK FLOW RATE(CFS) =      50.80   Tc(MIN.) =    6.43
  TOTAL AREA(ACRES) =       11.3
  LONGEST FLOWPATH FROM NODE    216.00 TO NODE    226.00 =    1545.00 FEET.

****************************************************************************
  FLOW PROCESS FROM NODE    226.00 TO NODE    228.00 IS CODE =  31
```

```
----------------------------------------------------------------------------
  >>>>>COMPUTE PIPE-FLOW TRAVEL TIME THRU SUBAREA<<<<<
  >>>>>USING COMPUTER-ESTIMATED PIPESIZE (NON-PRESSURE FLOW)<<<<<
============================================================================
  ELEVATION DATA: UPSTREAM(FEET) =   784.00  DOWNSTREAM(FEET) =   770.00
  FLOW LENGTH(FEET) =   140.00   MANNING'S N =  0.013
  DEPTH OF FLOW IN  24.0 INCH PIPE IS  15.5 INCHES
  PIPE-FLOW VELOCITY(FEET/SEC.) =  23.70
  ESTIMATED PIPE DIAMETER(INCH) =  24.00    NUMBER OF PIPES =   1
  PIPE-FLOW(CFS) =      50.80
  PIPE TRAVEL TIME(MIN.) =   0.10    Tc(MIN.) =    6.53
  LONGEST FLOWPATH FROM NODE    216.00 TO NODE    228.00 =    1685.00 FEET.

****************************************************************************
  FLOW PROCESS FROM NODE    228.00 TO NODE    229.00 IS CODE =  51
----------------------------------------------------------------------------
  >>>>>COMPUTE TRAPEZOIDAL CHANNEL FLOW<<<<<
  >>>>>TRAVELTIME THRU SUBAREA (EXISTING ELEMENT)<<<<<
============================================================================
  ELEVATION DATA: UPSTREAM(FEET) =    770.00  DOWNSTREAM(FEET) =    768.00
  CHANNEL LENGTH THRU SUBAREA(FEET) =   200.00   CHANNEL SLOPE =  0.0100
  CHANNEL BASE(FEET) =    3.00   "Z" FACTOR =   2.000
  MANNING'S FACTOR = 0.030   MAXIMUM DEPTH(FEET) =  10.00
   100 YEAR RAINFALL INTENSITY(INCH/HOUR) =  6.665
  *USER SPECIFIED(SUBAREA):
  USER-SPECIFIED RUNOFF COEFFICIENT = .3500
  S.C.S. CURVE NUMBER (AMC II) =   0
  TRAVEL TIME COMPUTED USING ESTIMATED FLOW(CFS) =      51.66
  TRAVEL TIME THRU SUBAREA BASED ON VELOCITY(FEET/SEC.) =   4.96
  AVERAGE FLOW DEPTH(FEET) =   1.65   TRAVEL TIME(MIN.) =   0.67
  Tc(MIN.) =    7.20
  SUBAREA AREA(ACRES) =     0.74       SUBAREA RUNOFF(CFS) =    1.73
  AREA-AVERAGE RUNOFF COEFFICIENT =  0.688
  TOTAL AREA(ACRES) =       12.0         PEAK FLOW RATE(CFS) =      55.15

  END OF SUBAREA CHANNEL FLOW HYDRAULICS:
  DEPTH(FEET) =  1.70   FLOW VELOCITY(FEET/SEC.) =   5.05
  LONGEST FLOWPATH FROM NODE    216.00 TO NODE    229.00 =    1885.00 FEET.

****************************************************************************
  FLOW PROCESS FROM NODE    229.00 TO NODE    230.00 IS CODE =  31
----------------------------------------------------------------------------
  >>>>>COMPUTE PIPE-FLOW TRAVEL TIME THRU SUBAREA<<<<<
  >>>>>USING COMPUTER-ESTIMATED PIPESIZE (NON-PRESSURE FLOW)<<<<<
============================================================================
  ELEVATION DATA: UPSTREAM(FEET) =   768.00  DOWNSTREAM(FEET) =   759.00
  FLOW LENGTH(FEET) =    60.00   MANNING'S N =  0.013
  DEPTH OF FLOW IN  21.0 INCH PIPE IS  16.3 INCHES
  PIPE-FLOW VELOCITY(FEET/SEC.) =  27.54
  ESTIMATED PIPE DIAMETER(INCH) =  21.00    NUMBER OF PIPES =   1
  PIPE-FLOW(CFS) =      55.15
  PIPE TRAVEL TIME(MIN.) =   0.04    Tc(MIN.) =    7.23
  LONGEST FLOWPATH FROM NODE    216.00 TO NODE    230.00 =    1945.00 FEET.

****************************************************************************
  FLOW PROCESS FROM NODE    230.00 TO NODE    230.00 IS CODE =  10
----------------------------------------------------------------------------
  >>>>>MAIN-STREAM MEMORY COPIED ONTO MEMORY BANK # 2 <<<<<
============================================================================

****************************************************************************
  FLOW PROCESS FROM NODE    268.00 TO NODE    269.00 IS CODE =  21
----------------------------------------------------------------------------
```

```
  >>>>>RATIONAL METHOD INITIAL SUBAREA ANALYSIS<<<<<
==============================================================================
  *USER SPECIFIED(SUBAREA):
  USER-SPECIFIED RUNOFF COEFFICIENT = .7100
  S.C.S. CURVE NUMBER (AMC II) =   0
  INITIAL SUBAREA FLOW-LENGTH(FEET) =    90.00
  UPSTREAM ELEVATION(FEET) =    818.00
  DOWNSTREAM ELEVATION(FEET) =    812.00
  ELEVATION DIFFERENCE(FEET) =      6.00
  SUBAREA OVERLAND TIME OF FLOW(MIN.) =    3.539
   100 YEAR RAINFALL INTENSITY(INCH/HOUR) =  8.431
  NOTE: RAINFALL INTENSITY IS BASED ON Tc = 5-MINUTE.
  SUBAREA RUNOFF(CFS) =      0.48
  TOTAL AREA(ACRES) =      0.08   TOTAL RUNOFF(CFS) =      0.48

******************************************************************************
  FLOW PROCESS FROM NODE    269.00 TO NODE    280.00 IS CODE =  62
------------------------------------------------------------------------------
  >>>>>COMPUTE STREET FLOW TRAVEL TIME THRU SUBAREA<<<<<
  >>>>>(STREET TABLE SECTION #  1 USED)<<<<<
==============================================================================
  UPSTREAM ELEVATION(FEET) =  812.00  DOWNSTREAM ELEVATION(FEET) =  781.00
  STREET LENGTH(FEET) =   360.00   CURB HEIGHT(INCHES) =  4.0
  STREET HALFWIDTH(FEET) = 16.00

  DISTANCE FROM CROWN TO CROSSFALL GRADEBREAK(FEET) =   8.00
  INSIDE STREET CROSSFALL(DECIMAL) =  0.020
  OUTSIDE STREET CROSSFALL(DECIMAL)  =  0.020

  SPECIFIED NUMBER OF HALFSTREETS CARRYING RUNOFF =  1
  STREET PARKWAY CROSSFALL(DECIMAL)  =  0.020
  Manning's FRICTION FACTOR for Streetflow Section(curb-to-curb) =   0.0150
  Manning's FRICTION FACTOR for Back-of-Walk Flow Section =   0.0150

    **TRAVEL TIME COMPUTED USING ESTIMATED FLOW(CFS) =       2.24
    STREETFLOW MODEL RESULTS USING ESTIMATED FLOW:
    STREET FLOW DEPTH(FEET) =  0.16
    HALFSTREET FLOOD WIDTH(FEET) =    6.86
    AVERAGE FLOW VELOCITY(FEET/SEC.) =    4.76
    PRODUCT OF DEPTH&VELOCITY(FT*FT/SEC.) =    0.74
  STREET FLOW TRAVEL TIME(MIN.) =   1.26   Tc(MIN.) =    4.80
   100 YEAR RAINFALL INTENSITY(INCH/HOUR) =  8.431
  NOTE: RAINFALL INTENSITY IS BASED ON Tc = 5-MINUTE.
  *USER SPECIFIED(SUBAREA):
  USER-SPECIFIED RUNOFF COEFFICIENT = .7100
  S.C.S. CURVE NUMBER (AMC II) =   0
  AREA-AVERAGE RUNOFF COEFFICIENT =  0.710
  SUBAREA AREA(ACRES) =    0.59      SUBAREA RUNOFF(CFS) =    3.53
  TOTAL AREA(ACRES) =        0.7        PEAK FLOW RATE(CFS) =       4.01

  END OF SUBAREA STREET FLOW HYDRAULICS:
  DEPTH(FEET) = 0.19   HALFSTREET FLOOD WIDTH(FEET) =   8.47
  FLOW VELOCITY(FEET/SEC.) =  5.58   DEPTH*VELOCITY(FT*FT/SEC.) =   1.05
  LONGEST FLOWPATH FROM NODE    268.00 TO NODE    280.00 =     450.00 FEET.

******************************************************************************
  FLOW PROCESS FROM NODE    280.00 TO NODE    276.00 IS CODE =  31
------------------------------------------------------------------------------
  >>>>>COMPUTE PIPE-FLOW TRAVEL TIME THRU SUBAREA<<<<<
  >>>>>USING COMPUTER-ESTIMATED PIPESIZE (NON-PRESSURE FLOW)<<<<<
==============================================================================
  ELEVATION DATA: UPSTREAM(FEET) =   775.00  DOWNSTREAM(FEET) =   774.50
  FLOW LENGTH(FEET) =    25.00   MANNING'S N =  0.013
```

```
  DEPTH OF FLOW IN  12.0 INCH PIPE IS   8.4 INCHES
  PIPE-FLOW VELOCITY(FEET/SEC.) =   6.81
  ESTIMATED PIPE DIAMETER(INCH) =  12.00    NUMBER OF PIPES =   1
  PIPE-FLOW(CFS) =       4.01
  PIPE TRAVEL TIME(MIN.) =   0.06    Tc(MIN.) =    4.86
  LONGEST FLOWPATH FROM NODE    268.00 TO NODE    276.00 =     475.00 FEET.

****************************************************************************
  FLOW PROCESS FROM NODE    276.00 TO NODE    276.00 IS CODE =   1
----------------------------------------------------------------------------
  >>>>>DESIGNATE INDEPENDENT STREAM FOR CONFLUENCE<<<<<
============================================================================
  TOTAL NUMBER OF STREAMS =  2
  CONFLUENCE VALUES USED FOR INDEPENDENT STREAM  1 ARE:
  TIME OF CONCENTRATION(MIN.) =    4.86
  RAINFALL INTENSITY(INCH/HR) =   8.43
  TOTAL STREAM AREA(ACRES) =     0.67
  PEAK FLOW RATE(CFS) AT CONFLUENCE =      4.01

****************************************************************************
  FLOW PROCESS FROM NODE    272.00 TO NODE    269.00 IS CODE =  21
----------------------------------------------------------------------------
  >>>>>RATIONAL METHOD INITIAL SUBAREA ANALYSIS<<<<<
============================================================================
  *USER SPECIFIED(SUBAREA):
  USER-SPECIFIED RUNOFF COEFFICIENT = .7100
  S.C.S. CURVE NUMBER (AMC II) =   0
  INITIAL SUBAREA FLOW-LENGTH(FEET) =    90.00
  UPSTREAM ELEVATION(FEET) =    818.00
  DOWNSTREAM ELEVATION(FEET) =    812.00
  ELEVATION DIFFERENCE(FEET) =      6.00
  SUBAREA OVERLAND TIME OF FLOW(MIN.) =    3.539
   100 YEAR RAINFALL INTENSITY(INCH/HOUR) =  8.431
  NOTE: RAINFALL INTENSITY IS BASED ON Tc = 5-MINUTE.
  SUBAREA RUNOFF(CFS) =      0.30
  TOTAL AREA(ACRES) =      0.05   TOTAL RUNOFF(CFS) =      0.30

****************************************************************************
  FLOW PROCESS FROM NODE    269.00 TO NODE    276.00 IS CODE =  62
----------------------------------------------------------------------------
  >>>>>COMPUTE STREET FLOW TRAVEL TIME THRU SUBAREA<<<<<
  >>>>>(STREET TABLE SECTION #  1 USED)<<<<<
============================================================================
  UPSTREAM ELEVATION(FEET) =  812.00  DOWNSTREAM ELEVATION(FEET) =  781.00
  STREET LENGTH(FEET) =   350.00   CURB HEIGHT(INCHES) =  4.0
  STREET HALFWIDTH(FEET) = 16.00

  DISTANCE FROM CROWN TO CROSSFALL GRADEBREAK(FEET) =   8.00
  INSIDE STREET CROSSFALL(DECIMAL) =  0.020
  OUTSIDE STREET CROSSFALL(DECIMAL)  =  0.020

  SPECIFIED NUMBER OF HALFSTREETS CARRYING RUNOFF =  1
  STREET PARKWAY CROSSFALL(DECIMAL)  =  0.020
  Manning's FRICTION FACTOR for Streetflow Section(curb-to-curb) =   0.0150
  Manning's FRICTION FACTOR for Back-of-Walk Flow Section =   0.0150

    **TRAVEL TIME COMPUTED USING ESTIMATED FLOW(CFS) =       0.77
    STREETFLOW MODEL RESULTS USING ESTIMATED FLOW:
    STREET FLOW DEPTH(FEET) =  0.11
    HALFSTREET FLOOD WIDTH(FEET) =    4.57
    AVERAGE FLOW VELOCITY(FEET/SEC.) =    3.66
    PRODUCT OF DEPTH&VELOCITY(FT*FT/SEC.) =    0.40
  STREET FLOW TRAVEL TIME(MIN.) =   1.59   Tc(MIN.) =    5.13
```

```
 100 YEAR RAINFALL INTENSITY(INCH/HOUR) =  8.290
*USER SPECIFIED(SUBAREA):
USER-SPECIFIED RUNOFF COEFFICIENT = .7100
S.C.S. CURVE NUMBER (AMC II) =   0
AREA-AVERAGE RUNOFF COEFFICIENT =  0.710
SUBAREA AREA(ACRES) =    0.16      SUBAREA RUNOFF(CFS) =    0.94
TOTAL AREA(ACRES) =        0.2        PEAK FLOW RATE(CFS) =       1.24

END OF SUBAREA STREET FLOW HYDRAULICS:
DEPTH(FEET) = 0.13   HALFSTREET FLOOD WIDTH(FEET) =   5.44
FLOW VELOCITY(FEET/SEC.) =  4.16   DEPTH*VELOCITY(FT*FT/SEC.) =   0.53
LONGEST FLOWPATH FROM NODE    272.00 TO NODE    276.00 =     440.00 FEET.

****************************************************************************
FLOW PROCESS FROM NODE    276.00 TO NODE    276.00 IS CODE =   1
----------------------------------------------------------------------------
>>>>>DESIGNATE INDEPENDENT STREAM FOR CONFLUENCE<<<<<
>>>>>AND COMPUTE VARIOUS CONFLUENCED STREAM VALUES<<<<<
============================================================================
TOTAL NUMBER OF STREAMS =  2
CONFLUENCE VALUES USED FOR INDEPENDENT STREAM  2 ARE:
TIME OF CONCENTRATION(MIN.) =    5.13
RAINFALL INTENSITY(INCH/HR) =   8.29
TOTAL STREAM AREA(ACRES) =     0.21
PEAK FLOW RATE(CFS) AT CONFLUENCE =      1.24

** CONFLUENCE DATA **
STREAM     RUNOFF       Tc      INTENSITY      AREA
NUMBER      (CFS)     (MIN.)   (INCH/HOUR)    (ACRE)
    1        4.01     4.86        8.431          0.67
    2        1.24     5.13        8.290          0.21

RAINFALL INTENSITY AND TIME OF CONCENTRATION RATIO
CONFLUENCE FORMULA USED FOR  2 STREAMS.

** PEAK FLOW RATE TABLE **
STREAM     RUNOFF      Tc      INTENSITY
NUMBER      (CFS)    (MIN.)   (INCH/HOUR)
    1        5.18     4.86       8.431
    2        5.18     5.13       8.290

COMPUTED CONFLUENCE ESTIMATES ARE AS FOLLOWS:
PEAK FLOW RATE(CFS) =       5.18   Tc(MIN.) =    4.86
TOTAL AREA(ACRES) =        0.9
LONGEST FLOWPATH FROM NODE    268.00 TO NODE    276.00 =     475.00 FEET.

****************************************************************************
FLOW PROCESS FROM NODE    276.00 TO NODE    284.00 IS CODE =  31
----------------------------------------------------------------------------
>>>>>COMPUTE PIPE-FLOW TRAVEL TIME THRU SUBAREA<<<<<
>>>>>USING COMPUTER-ESTIMATED PIPESIZE (NON-PRESSURE FLOW)<<<<<
============================================================================
ELEVATION DATA: UPSTREAM(FEET) =   774.50  DOWNSTREAM(FEET) =   770.00
FLOW LENGTH(FEET) =    30.00   MANNING'S N =  0.013
ESTIMATED PIPE DIAMETER(INCH) INCREASED TO 12.000
DEPTH OF FLOW IN  12.0 INCH PIPE IS   5.2 INCHES
PIPE-FLOW VELOCITY(FEET/SEC.) =  15.69
ESTIMATED PIPE DIAMETER(INCH) =  12.00    NUMBER OF PIPES =   1
PIPE-FLOW(CFS) =       5.18
PIPE TRAVEL TIME(MIN.) =   0.03    Tc(MIN.) =    4.89
LONGEST FLOWPATH FROM NODE    268.00 TO NODE    284.00 =     505.00 FEET.

****************************************************************************
```

```
  FLOW PROCESS FROM NODE    284.00 TO NODE    284.00 IS CODE =   1
----------------------------------------------------------------------------
  >>>>>DESIGNATE INDEPENDENT STREAM FOR CONFLUENCE<<<<<
============================================================================
  TOTAL NUMBER OF STREAMS =  2
  CONFLUENCE VALUES USED FOR INDEPENDENT STREAM  1 ARE:
  TIME OF CONCENTRATION(MIN.) =    4.89
  RAINFALL INTENSITY(INCH/HR) =   8.43
  TOTAL STREAM AREA(ACRES) =     0.88
  PEAK FLOW RATE(CFS) AT CONFLUENCE =      5.18

****************************************************************************
  FLOW PROCESS FROM NODE    277.50 TO NODE    277.00 IS CODE =  21
----------------------------------------------------------------------------
  >>>>>RATIONAL METHOD INITIAL SUBAREA ANALYSIS<<<<<
============================================================================
  *USER SPECIFIED(SUBAREA):
  USER-SPECIFIED RUNOFF COEFFICIENT = .7100
  S.C.S. CURVE NUMBER (AMC II) =   0
  INITIAL SUBAREA FLOW-LENGTH(FEET) =   100.00
  UPSTREAM ELEVATION(FEET) =    777.80
  DOWNSTREAM ELEVATION(FEET) =    776.80
  ELEVATION DIFFERENCE(FEET) =      1.00
  SUBAREA OVERLAND TIME OF FLOW(MIN.) =    5.660
  WARNING: INITIAL SUBAREA FLOW PATH LENGTH IS GREATER THAN
           THE MAXIMUM OVERLAND FLOW LENGTH =    65.00
           (Reference: Table 3-1B of Hydrology Manual)
           THE MAXIMUM OVERLAND FLOW LENGTH IS USED IN Tc CALCULATION!
   100 YEAR RAINFALL INTENSITY(INCH/HOUR) =  7.783
  SUBAREA RUNOFF(CFS) =      2.65
  TOTAL AREA(ACRES) =      0.48   TOTAL RUNOFF(CFS) =      2.65

****************************************************************************
  FLOW PROCESS FROM NODE    277.00 TO NODE    278.00 IS CODE =  62
----------------------------------------------------------------------------
  >>>>>COMPUTE STREET FLOW TRAVEL TIME THRU SUBAREA<<<<<
  >>>>>(STREET TABLE SECTION #  1 USED)<<<<<
============================================================================
  UPSTREAM ELEVATION(FEET) =  776.80  DOWNSTREAM ELEVATION(FEET) =  774.00
  STREET LENGTH(FEET) =   300.00   CURB HEIGHT(INCHES) =  4.0
  STREET HALFWIDTH(FEET) = 16.00

  DISTANCE FROM CROWN TO CROSSFALL GRADEBREAK(FEET) =   8.00
  INSIDE STREET CROSSFALL(DECIMAL) =  0.020
  OUTSIDE STREET CROSSFALL(DECIMAL)  =  0.020

  SPECIFIED NUMBER OF HALFSTREETS CARRYING RUNOFF =  1
  STREET PARKWAY CROSSFALL(DECIMAL)  =  0.020
  Manning's FRICTION FACTOR for Streetflow Section(curb-to-curb) =   0.0150
  Manning's FRICTION FACTOR for Back-of-Walk Flow Section =   0.0150

    **TRAVEL TIME COMPUTED USING ESTIMATED FLOW(CFS) =       7.35
    ***STREET FLOW SPLITS OVER STREET-CROWN***
    FULL DEPTH(FEET) =    0.34   FLOOD WIDTH(FEET) =   16.23
    FULL HALF-STREET VELOCITY(FEET/SEC.) =    2.78
    SPLIT DEPTH(FEET) =    0.10   SPLIT FLOOD WIDTH(FEET) =    4.33
    SPLIT FLOW(CFS) =    0.22   SPLIT VELOCITY(FEET/SEC.) =    1.18
    STREETFLOW MODEL RESULTS USING ESTIMATED FLOW:
    STREET FLOW DEPTH(FEET) =  0.34
    HALFSTREET FLOOD WIDTH(FEET) =   16.23
    AVERAGE FLOW VELOCITY(FEET/SEC.) =    2.78
    PRODUCT OF DEPTH&VELOCITY(FT*FT/SEC.) =    0.94
  STREET FLOW TRAVEL TIME(MIN.) =   1.80   Tc(MIN.) =    7.46
```

```
 100 YEAR RAINFALL INTENSITY(INCH/HOUR) =  6.515
*USER SPECIFIED(SUBAREA):
USER-SPECIFIED RUNOFF COEFFICIENT = .7100
S.C.S. CURVE NUMBER (AMC II) =   0
AREA-AVERAGE RUNOFF COEFFICIENT =  0.710
SUBAREA AREA(ACRES) =    2.03      SUBAREA RUNOFF(CFS) =    9.39
TOTAL AREA(ACRES) =        2.5        PEAK FLOW RATE(CFS) =      11.61

END OF SUBAREA STREET FLOW HYDRAULICS:
DEPTH(FEET) = 0.34   HALFSTREET FLOOD WIDTH(FEET) =  16.23
FLOW VELOCITY(FEET/SEC.) =  2.78   DEPTH*VELOCITY(FT*FT/SEC.) =   0.94
*NOTE: INITIAL SUBAREA NOMOGRAPH WITH SUBAREA PARAMETERS,
       AND L =  300.0 FT WITH ELEVATION-DROP =   2.8 FT, IS   11.2 CFS,
       WHICH EXCEEDS THE TOP-OF-CURB STREET CAPACITY AT NODE    278.00
LONGEST FLOWPATH FROM NODE    277.50 TO NODE    278.00 =     400.00 FEET.

****************************************************************************
FLOW PROCESS FROM NODE    278.00 TO NODE    284.00 IS CODE =  31
----------------------------------------------------------------------------
>>>>>COMPUTE PIPE-FLOW TRAVEL TIME THRU SUBAREA<<<<<
>>>>>USING COMPUTER-ESTIMATED PIPESIZE (NON-PRESSURE FLOW)<<<<<
============================================================================
ELEVATION DATA: UPSTREAM(FEET) =   771.00  DOWNSTREAM(FEET) =   770.00
FLOW LENGTH(FEET) =    25.00   MANNING'S N =  0.013
DEPTH OF FLOW IN  15.0 INCH PIPE IS  11.6 INCHES
PIPE-FLOW VELOCITY(FEET/SEC.) =  11.36
ESTIMATED PIPE DIAMETER(INCH) =  15.00    NUMBER OF PIPES =   1
PIPE-FLOW(CFS) =      11.61
PIPE TRAVEL TIME(MIN.) =   0.04    Tc(MIN.) =    7.49
LONGEST FLOWPATH FROM NODE    277.50 TO NODE    284.00 =     425.00 FEET.

****************************************************************************
FLOW PROCESS FROM NODE    284.00 TO NODE    284.00 IS CODE =   1
----------------------------------------------------------------------------
>>>>>DESIGNATE INDEPENDENT STREAM FOR CONFLUENCE<<<<<
>>>>>AND COMPUTE VARIOUS CONFLUENCED STREAM VALUES<<<<<
============================================================================
TOTAL NUMBER OF STREAMS =  2
CONFLUENCE VALUES USED FOR INDEPENDENT STREAM  2 ARE:
TIME OF CONCENTRATION(MIN.) =    7.49
RAINFALL INTENSITY(INCH/HR) =   6.49
TOTAL STREAM AREA(ACRES) =     2.51
PEAK FLOW RATE(CFS) AT CONFLUENCE =     11.61

** CONFLUENCE DATA **
STREAM     RUNOFF       Tc      INTENSITY      AREA
NUMBER      (CFS)     (MIN.)   (INCH/HOUR)    (ACRE)
    1        5.18     4.89        8.431          0.88
    2       11.61     7.49        6.494          2.51

RAINFALL INTENSITY AND TIME OF CONCENTRATION RATIO
CONFLUENCE FORMULA USED FOR  2 STREAMS.

** PEAK FLOW RATE TABLE **
STREAM     RUNOFF      Tc      INTENSITY
NUMBER      (CFS)    (MIN.)   (INCH/HOUR)
    1       12.76     4.89       8.431
    2       15.60     7.49       6.494

COMPUTED CONFLUENCE ESTIMATES ARE AS FOLLOWS:
PEAK FLOW RATE(CFS) =      15.60   Tc(MIN.) =    7.49
TOTAL AREA(ACRES) =        3.4
LONGEST FLOWPATH FROM NODE    268.00 TO NODE    284.00 =     505.00 FEET.
```

```
****************************************************************************
  FLOW PROCESS FROM NODE    284.00 TO NODE    230.00 IS CODE =  31
----------------------------------------------------------------------------
  >>>>>COMPUTE PIPE-FLOW TRAVEL TIME THRU SUBAREA<<<<<
  >>>>>USING COMPUTER-ESTIMATED PIPESIZE (NON-PRESSURE FLOW)<<<<<
============================================================================
  ELEVATION DATA: UPSTREAM(FEET) =   770.00  DOWNSTREAM(FEET) =   759.00
  FLOW LENGTH(FEET) =   180.00   MANNING'S N =  0.013
  DEPTH OF FLOW IN  18.0 INCH PIPE IS  10.4 INCHES
  PIPE-FLOW VELOCITY(FEET/SEC.) =  14.76
  ESTIMATED PIPE DIAMETER(INCH) =  18.00    NUMBER OF PIPES =   1
  PIPE-FLOW(CFS) =      15.60
  PIPE TRAVEL TIME(MIN.) =   0.20    Tc(MIN.) =    7.70
  LONGEST FLOWPATH FROM NODE    268.00 TO NODE    230.00 =     685.00 FEET.

****************************************************************************
  FLOW PROCESS FROM NODE    230.00 TO NODE    230.00 IS CODE =  11
----------------------------------------------------------------------------
  >>>>>CONFLUENCE MEMORY BANK # 2 WITH THE MAIN-STREAM MEMORY<<<<<
============================================================================

  ** MAIN STREAM CONFLUENCE DATA **
  STREAM     RUNOFF      Tc      INTENSITY     AREA
  NUMBER      (CFS)    (MIN.)   (INCH/HOUR)   (ACRE)
      1       15.60     7.70       6.383        3.39
  LONGEST FLOWPATH FROM NODE    268.00 TO NODE    230.00 =     685.00 FEET.

  ** MEMORY BANK #  2 CONFLUENCE DATA **
  STREAM     RUNOFF      Tc      INTENSITY     AREA
  NUMBER      (CFS)    (MIN.)   (INCH/HOUR)   (ACRE)
      1       55.15     7.23       6.644       12.03
  LONGEST FLOWPATH FROM NODE    216.00 TO NODE    230.00 =    1945.00 FEET.

  ** PEAK FLOW RATE TABLE **
  STREAM    RUNOFF       Tc      INTENSITY
  NUMBER     (CFS)     (MIN.)   (INCH/HOUR)
      1      69.82       7.23        6.644
      2      68.59       7.70        6.383

  COMPUTED CONFLUENCE ESTIMATES ARE AS FOLLOWS:
  PEAK FLOW RATE(CFS) =      69.82   Tc(MIN.) =    7.23
  TOTAL AREA(ACRES) =       15.4

****************************************************************************
  FLOW PROCESS FROM NODE    230.00 TO NODE    230.00 IS CODE =  12
----------------------------------------------------------------------------
  >>>>>CLEAR MEMORY BANK # 2 <<<<<
============================================================================

****************************************************************************
  FLOW PROCESS FROM NODE    230.00 TO NODE    231.00 IS CODE =  52
----------------------------------------------------------------------------
  >>>>>COMPUTE NATURAL VALLEY CHANNEL FLOW<<<<<
  >>>>>TRAVELTIME THRU SUBAREA<<<<<
============================================================================
  ELEVATION DATA: UPSTREAM(FEET) =    759.00  DOWNSTREAM(FEET) =    742.00
  CHANNEL LENGTH THRU SUBAREA(FEET) =   140.00   CHANNEL SLOPE =  0.1214
  NOTE: CHANNEL SLOPE OF .1 WAS ASSUMED IN VELOCITY ESTIMATION
  CHANNEL FLOW THRU SUBAREA(CFS) =      69.82
  FLOW VELOCITY(FEET/SEC) =  13.49 (PER LACFCD/RCFC&WCD HYDROLOGY MANUAL)
  TRAVEL TIME(MIN.) =   0.17   Tc(MIN.) =    7.41
  LONGEST FLOWPATH FROM NODE    216.00 TO NODE    231.00 =    2085.00 FEET.
```

```
****************************************************************************
  FLOW PROCESS FROM NODE    231.00 TO NODE    231.00 IS CODE =  11
----------------------------------------------------------------------------
  >>>>>CONFLUENCE MEMORY BANK # 1 WITH THE MAIN-STREAM MEMORY<<<<<
============================================================================

  ** MAIN STREAM CONFLUENCE DATA **
  STREAM     RUNOFF      Tc      INTENSITY     AREA
  NUMBER      (CFS)    (MIN.)   (INCH/HOUR)   (ACRE)
      1       69.82     7.41       6.543       15.42
  LONGEST FLOWPATH FROM NODE    216.00 TO NODE    231.00 =    2085.00 FEET.

  ** MEMORY BANK #  1 CONFLUENCE DATA **
  STREAM     RUNOFF      Tc      INTENSITY     AREA
  NUMBER      (CFS)    (MIN.)   (INCH/HOUR)   (ACRE)
      1       28.41    10.55       5.209       15.58
  LONGEST FLOWPATH FROM NODE    204.00 TO NODE    231.00 =    1897.46 FEET.

  ** PEAK FLOW RATE TABLE **
  STREAM    RUNOFF       Tc      INTENSITY
  NUMBER     (CFS)     (MIN.)   (INCH/HOUR)
      1      89.76       7.41        6.543
      2      83.99      10.55        5.209

  COMPUTED CONFLUENCE ESTIMATES ARE AS FOLLOWS:
  PEAK FLOW RATE(CFS) =      89.76   Tc(MIN.) =    7.41
  TOTAL AREA(ACRES) =       31.0

****************************************************************************
  FLOW PROCESS FROM NODE    231.00 TO NODE    231.00 IS CODE =  12
----------------------------------------------------------------------------
  >>>>>CLEAR MEMORY BANK # 1 <<<<<
============================================================================

****************************************************************************
  FLOW PROCESS FROM NODE    231.00 TO NODE    265.00 IS CODE =  51
----------------------------------------------------------------------------
  >>>>>COMPUTE TRAPEZOIDAL CHANNEL FLOW<<<<<
  >>>>>TRAVELTIME THRU SUBAREA (EXISTING ELEMENT)<<<<<
============================================================================
  ELEVATION DATA: UPSTREAM(FEET) =    742.00  DOWNSTREAM(FEET) =    720.00
  CHANNEL LENGTH THRU SUBAREA(FEET) =   465.00   CHANNEL SLOPE =  0.0473
  CHANNEL BASE(FEET) =    3.00   "Z" FACTOR =   2.000
  MANNING'S FACTOR = 0.030   MAXIMUM DEPTH(FEET) =  10.00
   100 YEAR RAINFALL INTENSITY(INCH/HOUR) =  6.148
  *USER SPECIFIED(SUBAREA):
  USER-SPECIFIED RUNOFF COEFFICIENT = .3500
  S.C.S. CURVE NUMBER (AMC II) =   0
  TRAVEL TIME COMPUTED USING ESTIMATED FLOW(CFS) =      94.35
  TRAVEL TIME THRU SUBAREA BASED ON VELOCITY(FEET/SEC.) =  10.32
  AVERAGE FLOW DEPTH(FEET) =   1.52   TRAVEL TIME(MIN.) =   0.75
  Tc(MIN.) =    8.16
  SUBAREA AREA(ACRES) =     4.26       SUBAREA RUNOFF(CFS) =    9.17
  AREA-AVERAGE RUNOFF COEFFICIENT =  0.500
  TOTAL AREA(ACRES) =       35.3         PEAK FLOW RATE(CFS) =     108.37

  END OF SUBAREA CHANNEL FLOW HYDRAULICS:
  DEPTH(FEET) =  1.62   FLOW VELOCITY(FEET/SEC.) =  10.70
  LONGEST FLOWPATH FROM NODE    216.00 TO NODE    265.00 =    2550.00 FEET.

****************************************************************************
  FLOW PROCESS FROM NODE    265.00 TO NODE    265.00 IS CODE =  10
```

```
----------------------------------------------------------------------------
  >>>>>MAIN-STREAM MEMORY COPIED ONTO MEMORY BANK # 1 <<<<<
============================================================================

****************************************************************************
  FLOW PROCESS FROM NODE    283.00 TO NODE    285.00 IS CODE =  21
----------------------------------------------------------------------------
  >>>>>RATIONAL METHOD INITIAL SUBAREA ANALYSIS<<<<<
============================================================================
  *USER SPECIFIED(SUBAREA):
  USER-SPECIFIED RUNOFF COEFFICIENT = .7100
  S.C.S. CURVE NUMBER (AMC II) =   0
  INITIAL SUBAREA FLOW-LENGTH(FEET) =   330.00
  UPSTREAM ELEVATION(FEET) =    806.00
  DOWNSTREAM ELEVATION(FEET) =    760.00
  ELEVATION DIFFERENCE(FEET) =     46.00
  SUBAREA OVERLAND TIME OF FLOW(MIN.) =    3.259
  WARNING: INITIAL SUBAREA FLOW PATH LENGTH IS GREATER THAN
           THE MAXIMUM OVERLAND FLOW LENGTH =   100.00
           (Reference: Table 3-1B of Hydrology Manual)
           THE MAXIMUM OVERLAND FLOW LENGTH IS USED IN Tc CALCULATION!
   100 YEAR RAINFALL INTENSITY(INCH/HOUR) =  8.431
  NOTE: RAINFALL INTENSITY IS BASED ON Tc = 5-MINUTE.
  SUBAREA RUNOFF(CFS) =      1.74
  TOTAL AREA(ACRES) =      0.29   TOTAL RUNOFF(CFS) =      1.74

****************************************************************************
  FLOW PROCESS FROM NODE    285.00 TO NODE    282.00 IS CODE =  31
----------------------------------------------------------------------------
  >>>>>COMPUTE PIPE-FLOW TRAVEL TIME THRU SUBAREA<<<<<
  >>>>>USING COMPUTER-ESTIMATED PIPESIZE (NON-PRESSURE FLOW)<<<<<
============================================================================
  ELEVATION DATA: UPSTREAM(FEET) =   754.00  DOWNSTREAM(FEET) =   753.60
  FLOW LENGTH(FEET) =    20.00   MANNING'S N =  0.013
  ESTIMATED PIPE DIAMETER(INCH) INCREASED TO 12.000
  DEPTH OF FLOW IN  12.0 INCH PIPE IS   5.0 INCHES
  PIPE-FLOW VELOCITY(FEET/SEC.) =   5.60
  ESTIMATED PIPE DIAMETER(INCH) =  12.00    NUMBER OF PIPES =   1
  PIPE-FLOW(CFS) =       1.74
  PIPE TRAVEL TIME(MIN.) =   0.06    Tc(MIN.) =    3.32
  LONGEST FLOWPATH FROM NODE    283.00 TO NODE    282.00 =     350.00 FEET.

****************************************************************************
  FLOW PROCESS FROM NODE    282.00 TO NODE    282.00 IS CODE =   1
----------------------------------------------------------------------------
  >>>>>DESIGNATE INDEPENDENT STREAM FOR CONFLUENCE<<<<<
============================================================================
  TOTAL NUMBER OF STREAMS =  2
  CONFLUENCE VALUES USED FOR INDEPENDENT STREAM  1 ARE:
  TIME OF CONCENTRATION(MIN.) =    3.32
  RAINFALL INTENSITY(INCH/HR) =   8.43
  TOTAL STREAM AREA(ACRES) =     0.29
  PEAK FLOW RATE(CFS) AT CONFLUENCE =      1.74

****************************************************************************
  FLOW PROCESS FROM NODE    280.00 TO NODE    281.00 IS CODE =  21
----------------------------------------------------------------------------
  >>>>>RATIONAL METHOD INITIAL SUBAREA ANALYSIS<<<<<
============================================================================
  *USER SPECIFIED(SUBAREA):
  USER-SPECIFIED RUNOFF COEFFICIENT = .7100
  S.C.S. CURVE NUMBER (AMC II) =   0
  INITIAL SUBAREA FLOW-LENGTH(FEET) =   350.00
```

```
  UPSTREAM ELEVATION(FEET) =    781.00
  DOWNSTREAM ELEVATION(FEET) =    760.00
  ELEVATION DIFFERENCE(FEET) =     21.00
  SUBAREA OVERLAND TIME OF FLOW(MIN.) =    3.863
  WARNING: INITIAL SUBAREA FLOW PATH LENGTH IS GREATER THAN
           THE MAXIMUM OVERLAND FLOW LENGTH =   100.00
           (Reference: Table 3-1B of Hydrology Manual)
           THE MAXIMUM OVERLAND FLOW LENGTH IS USED IN Tc CALCULATION!
   100 YEAR RAINFALL INTENSITY(INCH/HOUR) =  8.431
  NOTE: RAINFALL INTENSITY IS BASED ON Tc = 5-MINUTE.
  SUBAREA RUNOFF(CFS) =      1.98
  TOTAL AREA(ACRES) =      0.33   TOTAL RUNOFF(CFS) =      1.98

****************************************************************************
  FLOW PROCESS FROM NODE    281.00 TO NODE    282.00 IS CODE =  31
----------------------------------------------------------------------------
  >>>>>COMPUTE PIPE-FLOW TRAVEL TIME THRU SUBAREA<<<<<
  >>>>>USING COMPUTER-ESTIMATED PIPESIZE (NON-PRESSURE FLOW)<<<<<
============================================================================
  ELEVATION DATA: UPSTREAM(FEET) =   754.00  DOWNSTREAM(FEET) =   753.60
  FLOW LENGTH(FEET) =     5.00   MANNING'S N =  0.013
  ESTIMATED PIPE DIAMETER(INCH) INCREASED TO 12.000
  DEPTH OF FLOW IN  12.0 INCH PIPE IS   3.7 INCHES
  PIPE-FLOW VELOCITY(FEET/SEC.) =   9.59
  ESTIMATED PIPE DIAMETER(INCH) =  12.00    NUMBER OF PIPES =   1
  PIPE-FLOW(CFS) =       1.98
  PIPE TRAVEL TIME(MIN.) =   0.01    Tc(MIN.) =    3.87
  LONGEST FLOWPATH FROM NODE    280.00 TO NODE    282.00 =     355.00 FEET.

****************************************************************************
  FLOW PROCESS FROM NODE    282.00 TO NODE    282.00 IS CODE =   1
----------------------------------------------------------------------------
  >>>>>DESIGNATE INDEPENDENT STREAM FOR CONFLUENCE<<<<<
  >>>>>AND COMPUTE VARIOUS CONFLUENCED STREAM VALUES<<<<<
============================================================================
  TOTAL NUMBER OF STREAMS =  2
  CONFLUENCE VALUES USED FOR INDEPENDENT STREAM  2 ARE:
  TIME OF CONCENTRATION(MIN.) =    3.87
  RAINFALL INTENSITY(INCH/HR) =   8.43
  TOTAL STREAM AREA(ACRES) =     0.33
  PEAK FLOW RATE(CFS) AT CONFLUENCE =      1.98

  ** CONFLUENCE DATA **
  STREAM     RUNOFF       Tc      INTENSITY      AREA
  NUMBER      (CFS)     (MIN.)   (INCH/HOUR)    (ACRE)
      1        1.74     3.32        8.431          0.29
      2        1.98     3.87        8.431          0.33

  RAINFALL INTENSITY AND TIME OF CONCENTRATION RATIO
  CONFLUENCE FORMULA USED FOR  2 STREAMS.

  ** PEAK FLOW RATE TABLE **
  STREAM     RUNOFF      Tc      INTENSITY
  NUMBER      (CFS)    (MIN.)   (INCH/HOUR)
      1        3.43     3.32       8.431
      2        3.71     3.87       8.431

  COMPUTED CONFLUENCE ESTIMATES ARE AS FOLLOWS:
  PEAK FLOW RATE(CFS) =       3.71   Tc(MIN.) =    3.87
  TOTAL AREA(ACRES) =        0.6
  LONGEST FLOWPATH FROM NODE    280.00 TO NODE    282.00 =     355.00 FEET.

****************************************************************************
```

```
  FLOW PROCESS FROM NODE    282.00 TO NODE    286.00 IS CODE =  31
----------------------------------------------------------------------------
  >>>>>COMPUTE PIPE-FLOW TRAVEL TIME THRU SUBAREA<<<<<
  >>>>>USING COMPUTER-ESTIMATED PIPESIZE (NON-PRESSURE FLOW)<<<<<
============================================================================
  ELEVATION DATA: UPSTREAM(FEET) =   753.60  DOWNSTREAM(FEET) =   746.00
  FLOW LENGTH(FEET) =   120.00   MANNING'S N =  0.013
  ESTIMATED PIPE DIAMETER(INCH) INCREASED TO 12.000
  DEPTH OF FLOW IN  12.0 INCH PIPE IS   5.5 INCHES
  PIPE-FLOW VELOCITY(FEET/SEC.) =  10.46
  ESTIMATED PIPE DIAMETER(INCH) =  12.00    NUMBER OF PIPES =   1
  PIPE-FLOW(CFS) =       3.71
  PIPE TRAVEL TIME(MIN.) =   0.19    Tc(MIN.) =    4.06
  LONGEST FLOWPATH FROM NODE    280.00 TO NODE    286.00 =     475.00 FEET.

****************************************************************************
  FLOW PROCESS FROM NODE    286.00 TO NODE    286.00 IS CODE =   1
----------------------------------------------------------------------------
  >>>>>DESIGNATE INDEPENDENT STREAM FOR CONFLUENCE<<<<<
============================================================================
  TOTAL NUMBER OF STREAMS =  2
  CONFLUENCE VALUES USED FOR INDEPENDENT STREAM  1 ARE:
  TIME OF CONCENTRATION(MIN.) =    4.06
  RAINFALL INTENSITY(INCH/HR) =   8.43
  TOTAL STREAM AREA(ACRES) =     0.62
  PEAK FLOW RATE(CFS) AT CONFLUENCE =      3.71

****************************************************************************
  FLOW PROCESS FROM NODE    287.00 TO NODE    288.00 IS CODE =  21
----------------------------------------------------------------------------
  >>>>>RATIONAL METHOD INITIAL SUBAREA ANALYSIS<<<<<
============================================================================
  *USER SPECIFIED(SUBAREA):
  USER-SPECIFIED RUNOFF COEFFICIENT = .7100
  S.C.S. CURVE NUMBER (AMC II) =   0
  INITIAL SUBAREA FLOW-LENGTH(FEET) =   100.00
  UPSTREAM ELEVATION(FEET) =    760.00
  DOWNSTREAM ELEVATION(FEET) =    758.00
  ELEVATION DIFFERENCE(FEET) =      2.00
  SUBAREA OVERLAND TIME OF FLOW(MIN.) =    4.984
  WARNING: INITIAL SUBAREA FLOW PATH LENGTH IS GREATER THAN
           THE MAXIMUM OVERLAND FLOW LENGTH =    80.00
           (Reference: Table 3-1B of Hydrology Manual)
           THE MAXIMUM OVERLAND FLOW LENGTH IS USED IN Tc CALCULATION!
   100 YEAR RAINFALL INTENSITY(INCH/HOUR) =  8.431
  NOTE: RAINFALL INTENSITY IS BASED ON Tc = 5-MINUTE.
  SUBAREA RUNOFF(CFS) =      1.74
  TOTAL AREA(ACRES) =      0.29   TOTAL RUNOFF(CFS) =      1.74

****************************************************************************
  FLOW PROCESS FROM NODE    288.00 TO NODE    289.00 IS CODE =  62
----------------------------------------------------------------------------
  >>>>>COMPUTE STREET FLOW TRAVEL TIME THRU SUBAREA<<<<<
  >>>>>(STREET TABLE SECTION #  1 USED)<<<<<
============================================================================
  UPSTREAM ELEVATION(FEET) =  758.00  DOWNSTREAM ELEVATION(FEET) =  754.00
  STREET LENGTH(FEET) =   300.00   CURB HEIGHT(INCHES) =  4.0
  STREET HALFWIDTH(FEET) = 16.00

  DISTANCE FROM CROWN TO CROSSFALL GRADEBREAK(FEET) =   8.00
  INSIDE STREET CROSSFALL(DECIMAL) =  0.020
  OUTSIDE STREET CROSSFALL(DECIMAL)  =  0.020
```

```
  SPECIFIED NUMBER OF HALFSTREETS CARRYING RUNOFF =  1
  STREET PARKWAY CROSSFALL(DECIMAL)  =  0.020
  Manning's FRICTION FACTOR for Streetflow Section(curb-to-curb) =   0.0150
  Manning's FRICTION FACTOR for Back-of-Walk Flow Section =   0.0150

    **TRAVEL TIME COMPUTED USING ESTIMATED FLOW(CFS) =       5.92
    STREETFLOW MODEL RESULTS USING ESTIMATED FLOW:
    STREET FLOW DEPTH(FEET) =  0.30
    HALFSTREET FLOOD WIDTH(FEET) =   13.97
    AVERAGE FLOW VELOCITY(FEET/SEC.) =    3.03
    PRODUCT OF DEPTH&VELOCITY(FT*FT/SEC.) =    0.90
  STREET FLOW TRAVEL TIME(MIN.) =   1.65   Tc(MIN.) =    6.63
   100 YEAR RAINFALL INTENSITY(INCH/HOUR) =  7.027
  *USER SPECIFIED(SUBAREA):
  USER-SPECIFIED RUNOFF COEFFICIENT = .7100
  S.C.S. CURVE NUMBER (AMC II) =   0
  AREA-AVERAGE RUNOFF COEFFICIENT =  0.710
  SUBAREA AREA(ACRES) =    1.67      SUBAREA RUNOFF(CFS) =    8.33
  TOTAL AREA(ACRES) =        2.0        PEAK FLOW RATE(CFS) =       9.78

  END OF SUBAREA STREET FLOW HYDRAULICS:
  DEPTH(FEET) = 0.34   HALFSTREET FLOOD WIDTH(FEET) =  16.23
  FLOW VELOCITY(FEET/SEC.) =  3.32   DEPTH*VELOCITY(FT*FT/SEC.) =   1.12
  *NOTE: INITIAL SUBAREA NOMOGRAPH WITH SUBAREA PARAMETERS,
         AND L =  300.0 FT WITH ELEVATION-DROP =   4.0 FT, IS    9.6 CFS,
         WHICH EXCEEDS THE TOP-OF-CURB STREET CAPACITY AT NODE    289.00
  LONGEST FLOWPATH FROM NODE    287.00 TO NODE    289.00 =     400.00 FEET.

****************************************************************************
  FLOW PROCESS FROM NODE    289.00 TO NODE    286.00 IS CODE =  31
----------------------------------------------------------------------------
  >>>>>COMPUTE PIPE-FLOW TRAVEL TIME THRU SUBAREA<<<<<
  >>>>>USING COMPUTER-ESTIMATED PIPESIZE (NON-PRESSURE FLOW)<<<<<
============================================================================
  ELEVATION DATA: UPSTREAM(FEET) =   748.00  DOWNSTREAM(FEET) =   746.00
  FLOW LENGTH(FEET) =    50.00   MANNING'S N =  0.013
  DEPTH OF FLOW IN  15.0 INCH PIPE IS  10.1 INCHES
  PIPE-FLOW VELOCITY(FEET/SEC.) =  11.09
  ESTIMATED PIPE DIAMETER(INCH) =  15.00    NUMBER OF PIPES =   1
  PIPE-FLOW(CFS) =       9.78
  PIPE TRAVEL TIME(MIN.) =   0.08    Tc(MIN.) =    6.71
  LONGEST FLOWPATH FROM NODE    287.00 TO NODE    286.00 =     450.00 FEET.

****************************************************************************
  FLOW PROCESS FROM NODE    286.00 TO NODE    286.00 IS CODE =   1
----------------------------------------------------------------------------
  >>>>>DESIGNATE INDEPENDENT STREAM FOR CONFLUENCE<<<<<
  >>>>>AND COMPUTE VARIOUS CONFLUENCED STREAM VALUES<<<<<
============================================================================
  TOTAL NUMBER OF STREAMS =  2
  CONFLUENCE VALUES USED FOR INDEPENDENT STREAM  2 ARE:
  TIME OF CONCENTRATION(MIN.) =    6.71
  RAINFALL INTENSITY(INCH/HR) =   6.98
  TOTAL STREAM AREA(ACRES) =     1.96
  PEAK FLOW RATE(CFS) AT CONFLUENCE =      9.78

  ** CONFLUENCE DATA **
  STREAM     RUNOFF       Tc      INTENSITY      AREA
  NUMBER      (CFS)     (MIN.)   (INCH/HOUR)    (ACRE)
      1        3.71     4.06        8.431          0.62
      2        9.78     6.71        6.976          1.96

  RAINFALL INTENSITY AND TIME OF CONCENTRATION RATIO
```

```
  CONFLUENCE FORMULA USED FOR  2 STREAMS.

  ** PEAK FLOW RATE TABLE **
  STREAM     RUNOFF      Tc      INTENSITY
  NUMBER      (CFS)    (MIN.)   (INCH/HOUR)
      1        9.64     4.06       8.431
      2       12.85     6.71       6.976

  COMPUTED CONFLUENCE ESTIMATES ARE AS FOLLOWS:
  PEAK FLOW RATE(CFS) =      12.85   Tc(MIN.) =    6.71
  TOTAL AREA(ACRES) =        2.6
  LONGEST FLOWPATH FROM NODE    280.00 TO NODE    286.00 =     475.00 FEET.

****************************************************************************
  FLOW PROCESS FROM NODE    286.00 TO NODE    290.00 IS CODE =  31
----------------------------------------------------------------------------
  >>>>>COMPUTE PIPE-FLOW TRAVEL TIME THRU SUBAREA<<<<<
  >>>>>USING COMPUTER-ESTIMATED PIPESIZE (NON-PRESSURE FLOW)<<<<<
============================================================================
  ELEVATION DATA: UPSTREAM(FEET) =   746.00  DOWNSTREAM(FEET) =   735.50
  FLOW LENGTH(FEET) =   175.00   MANNING'S N =  0.013
  DEPTH OF FLOW IN  15.0 INCH PIPE IS  10.7 INCHES
  PIPE-FLOW VELOCITY(FEET/SEC.) =  13.75
  ESTIMATED PIPE DIAMETER(INCH) =  15.00    NUMBER OF PIPES =   1
  PIPE-FLOW(CFS) =      12.85
  PIPE TRAVEL TIME(MIN.) =   0.21    Tc(MIN.) =    6.92
  LONGEST FLOWPATH FROM NODE    280.00 TO NODE    290.00 =     650.00 FEET.

****************************************************************************
  FLOW PROCESS FROM NODE    290.00 TO NODE    290.00 IS CODE =   1
----------------------------------------------------------------------------
  >>>>>DESIGNATE INDEPENDENT STREAM FOR CONFLUENCE<<<<<
============================================================================
  TOTAL NUMBER OF STREAMS =  3
  CONFLUENCE VALUES USED FOR INDEPENDENT STREAM  1 ARE:
  TIME OF CONCENTRATION(MIN.) =    6.92
  RAINFALL INTENSITY(INCH/HR) =   6.84
  TOTAL STREAM AREA(ACRES) =     2.58
  PEAK FLOW RATE(CFS) AT CONFLUENCE =     12.85

****************************************************************************
  FLOW PROCESS FROM NODE    291.00 TO NODE    292.00 IS CODE =  21
----------------------------------------------------------------------------
  >>>>>RATIONAL METHOD INITIAL SUBAREA ANALYSIS<<<<<
============================================================================
  *USER SPECIFIED(SUBAREA):
  USER-SPECIFIED RUNOFF COEFFICIENT = .7100
  S.C.S. CURVE NUMBER (AMC II) =   0
  INITIAL SUBAREA FLOW-LENGTH(FEET) =   100.00
  UPSTREAM ELEVATION(FEET) =    752.00
  DOWNSTREAM ELEVATION(FEET) =    750.00
  ELEVATION DIFFERENCE(FEET) =      2.00
  SUBAREA OVERLAND TIME OF FLOW(MIN.) =    4.984
  WARNING: INITIAL SUBAREA FLOW PATH LENGTH IS GREATER THAN
           THE MAXIMUM OVERLAND FLOW LENGTH =    80.00
           (Reference: Table 3-1B of Hydrology Manual)
           THE MAXIMUM OVERLAND FLOW LENGTH IS USED IN Tc CALCULATION!
   100 YEAR RAINFALL INTENSITY(INCH/HOUR) =  8.431
  NOTE: RAINFALL INTENSITY IS BASED ON Tc = 5-MINUTE.
  SUBAREA RUNOFF(CFS) =      2.45
  TOTAL AREA(ACRES) =      0.41   TOTAL RUNOFF(CFS) =      2.45

****************************************************************************
```

```
  FLOW PROCESS FROM NODE    292.00 TO NODE    293.00 IS CODE =  62
----------------------------------------------------------------------
  >>>>>COMPUTE STREET FLOW TRAVEL TIME THRU SUBAREA<<<<<
  >>>>>(STREET TABLE SECTION #  1 USED)<<<<<
======================================================================
  UPSTREAM ELEVATION(FEET) =  750.00  DOWNSTREAM ELEVATION(FEET) =  742.00
  STREET LENGTH(FEET) =   300.00   CURB HEIGHT(INCHES) =  4.0
  STREET HALFWIDTH(FEET) = 16.00

  DISTANCE FROM CROWN TO CROSSFALL GRADEBREAK(FEET) =   8.00
  INSIDE STREET CROSSFALL(DECIMAL) =  0.020
  OUTSIDE STREET CROSSFALL(DECIMAL)  =  0.020

  SPECIFIED NUMBER OF HALFSTREETS CARRYING RUNOFF =  1
  STREET PARKWAY CROSSFALL(DECIMAL)  =  0.020
  Manning's FRICTION FACTOR for Streetflow Section(curb-to-curb) =   0.0150
  Manning's FRICTION FACTOR for Back-of-Walk Flow Section =   0.0150

    **TRAVEL TIME COMPUTED USING ESTIMATED FLOW(CFS) =       8.20
    STREETFLOW MODEL RESULTS USING ESTIMATED FLOW:
    STREET FLOW DEPTH(FEET) =  0.29
    HALFSTREET FLOOD WIDTH(FEET) =   13.84
    AVERAGE FLOW VELOCITY(FEET/SEC.) =    4.28
    PRODUCT OF DEPTH&VELOCITY(FT*FT/SEC.) =    1.26
  STREET FLOW TRAVEL TIME(MIN.) =   1.17   Tc(MIN.) =    6.15
   100 YEAR RAINFALL INTENSITY(INCH/HOUR) =  7.375
  *USER SPECIFIED(SUBAREA):
  USER-SPECIFIED RUNOFF COEFFICIENT = .7100
  S.C.S. CURVE NUMBER (AMC II) =   0
  AREA-AVERAGE RUNOFF COEFFICIENT =  0.710
  SUBAREA AREA(ACRES) =    2.19      SUBAREA RUNOFF(CFS) =   11.47
  TOTAL AREA(ACRES) =        2.6        PEAK FLOW RATE(CFS) =      13.61

  END OF SUBAREA STREET FLOW HYDRAULICS:
  DEPTH(FEET) = 0.34   HALFSTREET FLOOD WIDTH(FEET) =  16.23
  FLOW VELOCITY(FEET/SEC.) =  4.70   DEPTH*VELOCITY(FT*FT/SEC.) =   1.59
  *NOTE: INITIAL SUBAREA NOMOGRAPH WITH SUBAREA PARAMETERS,
         AND L =  300.0 FT WITH ELEVATION-DROP =   8.0 FT, IS   13.1 CFS,
         WHICH EXCEEDS THE TOP-OF-CURB STREET CAPACITY AT NODE    293.00
  LONGEST FLOWPATH FROM NODE    291.00 TO NODE    293.00 =     400.00 FEET.

****************************************************************************
  FLOW PROCESS FROM NODE    293.00 TO NODE    290.00 IS CODE =  31
----------------------------------------------------------------------
  >>>>>COMPUTE PIPE-FLOW TRAVEL TIME THRU SUBAREA<<<<<
  >>>>>USING COMPUTER-ESTIMATED PIPESIZE (NON-PRESSURE FLOW)<<<<<
======================================================================
  ELEVATION DATA: UPSTREAM(FEET) =   736.00  DOWNSTREAM(FEET) =   735.50
  FLOW LENGTH(FEET) =    50.00   MANNING'S N =  0.013
  DEPTH OF FLOW IN  21.0 INCH PIPE IS  15.7 INCHES
  PIPE-FLOW VELOCITY(FEET/SEC.) =   7.08
  ESTIMATED PIPE DIAMETER(INCH) =  21.00    NUMBER OF PIPES =   1
  PIPE-FLOW(CFS) =      13.61
  PIPE TRAVEL TIME(MIN.) =   0.12    Tc(MIN.) =    6.27
  LONGEST FLOWPATH FROM NODE    291.00 TO NODE    290.00 =     450.00 FEET.

****************************************************************************
  FLOW PROCESS FROM NODE    290.00 TO NODE    290.00 IS CODE =   1
----------------------------------------------------------------------
  >>>>>DESIGNATE INDEPENDENT STREAM FOR CONFLUENCE<<<<<
======================================================================
  TOTAL NUMBER OF STREAMS =  3
  CONFLUENCE VALUES USED FOR INDEPENDENT STREAM  2 ARE:
```

```
  TIME OF CONCENTRATION(MIN.) =    6.27
  RAINFALL INTENSITY(INCH/HR) =   7.29
  TOTAL STREAM AREA(ACRES) =     2.60
  PEAK FLOW RATE(CFS) AT CONFLUENCE =     13.61

****************************************************************************
  FLOW PROCESS FROM NODE    281.00 TO NODE    299.00 IS CODE =  21
----------------------------------------------------------------------------
  >>>>>RATIONAL METHOD INITIAL SUBAREA ANALYSIS<<<<<
============================================================================
  *USER SPECIFIED(SUBAREA):
  USER-SPECIFIED RUNOFF COEFFICIENT = .7100
  S.C.S. CURVE NUMBER (AMC II) =   0
  INITIAL SUBAREA FLOW-LENGTH(FEET) =   130.00
  UPSTREAM ELEVATION(FEET) =    760.00
  DOWNSTREAM ELEVATION(FEET) =    752.00
  ELEVATION DIFFERENCE(FEET) =      8.00
  SUBAREA OVERLAND TIME OF FLOW(MIN.) =    3.831
  WARNING: INITIAL SUBAREA FLOW PATH LENGTH IS GREATER THAN
           THE MAXIMUM OVERLAND FLOW LENGTH =   100.00
           (Reference: Table 3-1B of Hydrology Manual)
           THE MAXIMUM OVERLAND FLOW LENGTH IS USED IN Tc CALCULATION!
   100 YEAR RAINFALL INTENSITY(INCH/HOUR) =  8.431
  NOTE: RAINFALL INTENSITY IS BASED ON Tc = 5-MINUTE.
  SUBAREA RUNOFF(CFS) =      0.72
  TOTAL AREA(ACRES) =      0.12   TOTAL RUNOFF(CFS) =      0.72

****************************************************************************
  FLOW PROCESS FROM NODE    299.00 TO NODE    290.00 IS CODE =  62
----------------------------------------------------------------------------
  >>>>>COMPUTE STREET FLOW TRAVEL TIME THRU SUBAREA<<<<<
  >>>>>(STREET TABLE SECTION #  1 USED)<<<<<
============================================================================
  UPSTREAM ELEVATION(FEET) =  752.00  DOWNSTREAM ELEVATION(FEET) =  742.00
  STREET LENGTH(FEET) =   175.00   CURB HEIGHT(INCHES) =  4.0
  STREET HALFWIDTH(FEET) = 16.00

  DISTANCE FROM CROWN TO CROSSFALL GRADEBREAK(FEET) =   8.00
  INSIDE STREET CROSSFALL(DECIMAL) =  0.020
  OUTSIDE STREET CROSSFALL(DECIMAL)  =  0.020

  SPECIFIED NUMBER OF HALFSTREETS CARRYING RUNOFF =  1
  STREET PARKWAY CROSSFALL(DECIMAL)  =  0.020
  Manning's FRICTION FACTOR for Streetflow Section(curb-to-curb) =   0.0150
  Manning's FRICTION FACTOR for Back-of-Walk Flow Section =   0.0150

    **TRAVEL TIME COMPUTED USING ESTIMATED FLOW(CFS) =       1.23
    STREETFLOW MODEL RESULTS USING ESTIMATED FLOW:
    STREET FLOW DEPTH(FEET) =  0.14
    HALFSTREET FLOOD WIDTH(FEET) =    5.87
    AVERAGE FLOW VELOCITY(FEET/SEC.) =    3.55
    PRODUCT OF DEPTH&VELOCITY(FT*FT/SEC.) =    0.48
  STREET FLOW TRAVEL TIME(MIN.) =   0.82   Tc(MIN.) =    4.65
   100 YEAR RAINFALL INTENSITY(INCH/HOUR) =  8.431
  NOTE: RAINFALL INTENSITY IS BASED ON Tc = 5-MINUTE.
  *USER SPECIFIED(SUBAREA):
  USER-SPECIFIED RUNOFF COEFFICIENT = .7100
  S.C.S. CURVE NUMBER (AMC II) =   0
  AREA-AVERAGE RUNOFF COEFFICIENT =  0.710
  SUBAREA AREA(ACRES) =    0.17      SUBAREA RUNOFF(CFS) =    1.02
  TOTAL AREA(ACRES) =        0.3        PEAK FLOW RATE(CFS) =       1.74

  END OF SUBAREA STREET FLOW HYDRAULICS:
```

```
  DEPTH(FEET) = 0.15   HALFSTREET FLOOD WIDTH(FEET) =   6.67
  FLOW VELOCITY(FEET/SEC.) =  3.89   DEPTH*VELOCITY(FT*FT/SEC.) =   0.59
  LONGEST FLOWPATH FROM NODE    281.00 TO NODE    290.00 =     305.00 FEET.

****************************************************************************
  FLOW PROCESS FROM NODE    290.00 TO NODE    290.00 IS CODE =   1
----------------------------------------------------------------------------
  >>>>>DESIGNATE INDEPENDENT STREAM FOR CONFLUENCE<<<<<
  >>>>>AND COMPUTE VARIOUS CONFLUENCED STREAM VALUES<<<<<
============================================================================
  TOTAL NUMBER OF STREAMS =  3
  CONFLUENCE VALUES USED FOR INDEPENDENT STREAM  3 ARE:
  TIME OF CONCENTRATION(MIN.) =    4.65
  RAINFALL INTENSITY(INCH/HR) =   8.43
  TOTAL STREAM AREA(ACRES) =     0.29
  PEAK FLOW RATE(CFS) AT CONFLUENCE =      1.74

  ** CONFLUENCE DATA **
  STREAM     RUNOFF       Tc      INTENSITY      AREA
  NUMBER      (CFS)     (MIN.)   (INCH/HOUR)    (ACRE)
      1       12.85     6.92        6.837          2.58
      2       13.61     6.27        7.286          2.60
      3        1.74     4.65        8.431          0.29

  RAINFALL INTENSITY AND TIME OF CONCENTRATION RATIO
  CONFLUENCE FORMULA USED FOR  3 STREAMS.

  ** PEAK FLOW RATE TABLE **
  STREAM     RUNOFF      Tc      INTENSITY
  NUMBER      (CFS)    (MIN.)   (INCH/HOUR)
      1       22.26     4.65       8.431
      2       27.17     6.27       7.286
      3       27.03     6.92       6.837

  COMPUTED CONFLUENCE ESTIMATES ARE AS FOLLOWS:
  PEAK FLOW RATE(CFS) =      27.17   Tc(MIN.) =    6.27
  TOTAL AREA(ACRES) =        5.5
  LONGEST FLOWPATH FROM NODE    280.00 TO NODE    290.00 =     650.00 FEET.

****************************************************************************
  FLOW PROCESS FROM NODE    290.00 TO NODE    295.00 IS CODE =  31
----------------------------------------------------------------------------
  >>>>>COMPUTE PIPE-FLOW TRAVEL TIME THRU SUBAREA<<<<<
  >>>>>USING COMPUTER-ESTIMATED PIPESIZE (NON-PRESSURE FLOW)<<<<<
============================================================================
  ELEVATION DATA: UPSTREAM(FEET) =   739.50  DOWNSTREAM(FEET) =   739.00
  FLOW LENGTH(FEET) =    50.00   MANNING'S N =  0.013
  DEPTH OF FLOW IN  27.0 INCH PIPE IS  20.5 INCHES
  PIPE-FLOW VELOCITY(FEET/SEC.) =   8.39
  ESTIMATED PIPE DIAMETER(INCH) =  27.00    NUMBER OF PIPES =   1
  PIPE-FLOW(CFS) =      27.17
  PIPE TRAVEL TIME(MIN.) =   0.10    Tc(MIN.) =    6.37
  LONGEST FLOWPATH FROM NODE    280.00 TO NODE    295.00 =     700.00 FEET.

****************************************************************************
  FLOW PROCESS FROM NODE    295.00 TO NODE    295.00 IS CODE =   1
----------------------------------------------------------------------------
  >>>>>DESIGNATE INDEPENDENT STREAM FOR CONFLUENCE<<<<<
============================================================================
  TOTAL NUMBER OF STREAMS =  2
  CONFLUENCE VALUES USED FOR INDEPENDENT STREAM  1 ARE:
  TIME OF CONCENTRATION(MIN.) =    6.37
  RAINFALL INTENSITY(INCH/HR) =   7.21
```

```
  TOTAL STREAM AREA(ACRES) =     5.47
  PEAK FLOW RATE(CFS) AT CONFLUENCE =     27.17

****************************************************************************
  FLOW PROCESS FROM NODE    295.00 TO NODE    295.00 IS CODE =  21
----------------------------------------------------------------------------
  >>>>>RATIONAL METHOD INITIAL SUBAREA ANALYSIS<<<<<
============================================================================
  *USER SPECIFIED(SUBAREA):
  USER-SPECIFIED RUNOFF COEFFICIENT = .3500
  S.C.S. CURVE NUMBER (AMC II) =   0
  INITIAL SUBAREA FLOW-LENGTH(FEET) =    50.00
  UPSTREAM ELEVATION(FEET) =    739.00
  DOWNSTREAM ELEVATION(FEET) =    738.50
  ELEVATION DIFFERENCE(FEET) =      0.50
  SUBAREA OVERLAND TIME OF FLOW(MIN.) =    9.546
   100 YEAR RAINFALL INTENSITY(INCH/HOUR) =  5.556
  SUBAREA RUNOFF(CFS) =      0.64
  TOTAL AREA(ACRES) =      0.33   TOTAL RUNOFF(CFS) =      0.64

****************************************************************************
  FLOW PROCESS FROM NODE    295.00 TO NODE    295.00 IS CODE =   1
----------------------------------------------------------------------------
  >>>>>DESIGNATE INDEPENDENT STREAM FOR CONFLUENCE<<<<<
  >>>>>AND COMPUTE VARIOUS CONFLUENCED STREAM VALUES<<<<<
============================================================================
  TOTAL NUMBER OF STREAMS =  2
  CONFLUENCE VALUES USED FOR INDEPENDENT STREAM  2 ARE:
  TIME OF CONCENTRATION(MIN.) =    9.55
  RAINFALL INTENSITY(INCH/HR) =   5.56
  TOTAL STREAM AREA(ACRES) =     0.33
  PEAK FLOW RATE(CFS) AT CONFLUENCE =      0.64

  ** CONFLUENCE DATA **
  STREAM     RUNOFF       Tc      INTENSITY      AREA
  NUMBER      (CFS)     (MIN.)   (INCH/HOUR)    (ACRE)
      1       27.17     6.37        7.212         5.47
      2        0.64     9.55        5.556         0.33

  RAINFALL INTENSITY AND TIME OF CONCENTRATION RATIO
  CONFLUENCE FORMULA USED FOR  2 STREAMS.

  ** PEAK FLOW RATE TABLE **
  STREAM     RUNOFF      Tc      INTENSITY
  NUMBER      (CFS)    (MIN.)   (INCH/HOUR)
      1       27.60     6.37       7.212
      2       21.57     9.55       5.556

  COMPUTED CONFLUENCE ESTIMATES ARE AS FOLLOWS:
  PEAK FLOW RATE(CFS) =      27.60   Tc(MIN.) =    6.37
  TOTAL AREA(ACRES) =        5.8
  LONGEST FLOWPATH FROM NODE    280.00 TO NODE    295.00 =     700.00 FEET.

****************************************************************************
  FLOW PROCESS FROM NODE    295.00 TO NODE    284.20 IS CODE =  31
----------------------------------------------------------------------------
  >>>>>COMPUTE PIPE-FLOW TRAVEL TIME THRU SUBAREA<<<<<
  >>>>>USING COMPUTER-ESTIMATED PIPESIZE (NON-PRESSURE FLOW)<<<<<
============================================================================
  ELEVATION DATA: UPSTREAM(FEET) =   739.00  DOWNSTREAM(FEET) =   730.00
  FLOW LENGTH(FEET) =    50.00   MANNING'S N =  0.013
  DEPTH OF FLOW IN  18.0 INCH PIPE IS  10.6 INCHES
  PIPE-FLOW VELOCITY(FEET/SEC.) =  25.49
```

```
  ESTIMATED PIPE DIAMETER(INCH) =  18.00    NUMBER OF PIPES =   1
  PIPE-FLOW(CFS) =      27.60
  PIPE TRAVEL TIME(MIN.) =   0.03    Tc(MIN.) =    6.40
  LONGEST FLOWPATH FROM NODE    280.00 TO NODE    284.20 =     750.00 FEET.

****************************************************************************
  FLOW PROCESS FROM NODE    284.20 TO NODE    265.00 IS CODE =  52
----------------------------------------------------------------------------
  >>>>>COMPUTE NATURAL VALLEY CHANNEL FLOW<<<<<
  >>>>>TRAVELTIME THRU SUBAREA<<<<<
============================================================================
  ELEVATION DATA: UPSTREAM(FEET) =    730.00  DOWNSTREAM(FEET) =    720.00
  CHANNEL LENGTH THRU SUBAREA(FEET) =   180.00   CHANNEL SLOPE =  0.0556
  CHANNEL FLOW THRU SUBAREA(CFS) =      27.60
  FLOW VELOCITY(FEET/SEC) =   7.71 (PER LACFCD/RCFC&WCD HYDROLOGY MANUAL)
  TRAVEL TIME(MIN.) =   0.39   Tc(MIN.) =    6.79
  LONGEST FLOWPATH FROM NODE    280.00 TO NODE    265.00 =     930.00 FEET.

****************************************************************************
  FLOW PROCESS FROM NODE    265.00 TO NODE    265.00 IS CODE =  11
----------------------------------------------------------------------------
  >>>>>CONFLUENCE MEMORY BANK # 1 WITH THE MAIN-STREAM MEMORY<<<<<
============================================================================

  ** MAIN STREAM CONFLUENCE DATA **
  STREAM     RUNOFF      Tc      INTENSITY     AREA
  NUMBER      (CFS)    (MIN.)   (INCH/HOUR)   (ACRE)
      1       27.60     6.79       6.920        5.80
  LONGEST FLOWPATH FROM NODE    280.00 TO NODE    265.00 =     930.00 FEET.

  ** MEMORY BANK #  1 CONFLUENCE DATA **
  STREAM     RUNOFF      Tc      INTENSITY     AREA
  NUMBER      (CFS)    (MIN.)   (INCH/HOUR)   (ACRE)
      1      108.37     8.16       6.148       35.26
  LONGEST FLOWPATH FROM NODE    216.00 TO NODE    265.00 =    2550.00 FEET.

  ** PEAK FLOW RATE TABLE **
  STREAM    RUNOFF       Tc      INTENSITY
  NUMBER     (CFS)     (MIN.)   (INCH/HOUR)
      1     117.81       6.79        6.920
      2     132.89       8.16        6.148

  COMPUTED CONFLUENCE ESTIMATES ARE AS FOLLOWS:
  PEAK FLOW RATE(CFS) =     132.89   Tc(MIN.) =    8.16
  TOTAL AREA(ACRES) =       41.1

****************************************************************************
  FLOW PROCESS FROM NODE    265.00 TO NODE    265.00 IS CODE =  12
----------------------------------------------------------------------------
  >>>>>CLEAR MEMORY BANK # 1 <<<<<
============================================================================

****************************************************************************
  FLOW PROCESS FROM NODE    265.00 TO NODE    254.00 IS CODE =  31
----------------------------------------------------------------------------
  >>>>>COMPUTE PIPE-FLOW TRAVEL TIME THRU SUBAREA<<<<<
  >>>>>USING COMPUTER-ESTIMATED PIPESIZE (NON-PRESSURE FLOW)<<<<<
============================================================================
  ELEVATION DATA: UPSTREAM(FEET) =   720.00  DOWNSTREAM(FEET) =   714.00
  FLOW LENGTH(FEET) =   125.00   MANNING'S N =  0.013
  DEPTH OF FLOW IN  36.0 INCH PIPE IS  28.3 INCHES
  PIPE-FLOW VELOCITY(FEET/SEC.) =  22.33
  ESTIMATED PIPE DIAMETER(INCH) =  36.00    NUMBER OF PIPES =   1
```

```
  PIPE-FLOW(CFS) =     132.89
  PIPE TRAVEL TIME(MIN.) =   0.09    Tc(MIN.) =    8.25
  LONGEST FLOWPATH FROM NODE    216.00 TO NODE    254.00 =    2675.00 FEET.

****************************************************************************
  FLOW PROCESS FROM NODE    254.00 TO NODE    253.00 IS CODE =  51
----------------------------------------------------------------------------
  >>>>>COMPUTE TRAPEZOIDAL CHANNEL FLOW<<<<<
  >>>>>TRAVELTIME THRU SUBAREA (EXISTING ELEMENT)<<<<<
============================================================================
  ELEVATION DATA: UPSTREAM(FEET) =    714.00  DOWNSTREAM(FEET) =    692.00
  CHANNEL LENGTH THRU SUBAREA(FEET) =   370.00   CHANNEL SLOPE =  0.0595
  CHANNEL BASE(FEET) =    3.00   "Z" FACTOR =   2.000
  MANNING'S FACTOR = 0.030   MAXIMUM DEPTH(FEET) =  10.00
   100 YEAR RAINFALL INTENSITY(INCH/HOUR) =  5.878
  *USER SPECIFIED(SUBAREA):
  USER-SPECIFIED RUNOFF COEFFICIENT = .7100
  S.C.S. CURVE NUMBER (AMC II) =   0
  TRAVEL TIME COMPUTED USING ESTIMATED FLOW(CFS) =     140.82
  TRAVEL TIME THRU SUBAREA BASED ON VELOCITY(FEET/SEC.) =  12.46
  AVERAGE FLOW DEPTH(FEET) =   1.74   TRAVEL TIME(MIN.) =   0.49
  Tc(MIN.) =    8.75
  SUBAREA AREA(ACRES) =     3.80       SUBAREA RUNOFF(CFS) =   15.86
  AREA-AVERAGE RUNOFF COEFFICIENT =  0.542
  TOTAL AREA(ACRES) =       44.9         PEAK FLOW RATE(CFS) =     142.98

  END OF SUBAREA CHANNEL FLOW HYDRAULICS:
  DEPTH(FEET) =  1.76   FLOW VELOCITY(FEET/SEC.) =  12.49
  LONGEST FLOWPATH FROM NODE    216.00 TO NODE    253.00 =    3045.00 FEET.

****************************************************************************
  FLOW PROCESS FROM NODE    253.00 TO NODE    246.50 IS CODE =  31
----------------------------------------------------------------------------
  >>>>>COMPUTE PIPE-FLOW TRAVEL TIME THRU SUBAREA<<<<<
  >>>>>USING COMPUTER-ESTIMATED PIPESIZE (NON-PRESSURE FLOW)<<<<<
============================================================================
  ELEVATION DATA: UPSTREAM(FEET) =   692.00  DOWNSTREAM(FEET) =   684.33
  FLOW LENGTH(FEET) =   140.00   MANNING'S N =  0.013
  DEPTH OF FLOW IN  36.0 INCH PIPE IS  28.4 INCHES
  PIPE-FLOW VELOCITY(FEET/SEC.) =  23.87
  ESTIMATED PIPE DIAMETER(INCH) =  36.00    NUMBER OF PIPES =   1
  PIPE-FLOW(CFS) =     142.98
  PIPE TRAVEL TIME(MIN.) =   0.10    Tc(MIN.) =    8.84
  LONGEST FLOWPATH FROM NODE    216.00 TO NODE    246.50 =    3185.00 FEET.

****************************************************************************
  FLOW PROCESS FROM NODE    246.50 TO NODE    246.50 IS CODE =  10
----------------------------------------------------------------------------
  >>>>>MAIN-STREAM MEMORY COPIED ONTO MEMORY BANK # 1 <<<<<
============================================================================

****************************************************************************
  FLOW PROCESS FROM NODE    253.80 TO NODE    253.70 IS CODE =  21
----------------------------------------------------------------------------
  >>>>>RATIONAL METHOD INITIAL SUBAREA ANALYSIS<<<<<
============================================================================
  *USER SPECIFIED(SUBAREA):
  USER-SPECIFIED RUNOFF COEFFICIENT = .7100
  S.C.S. CURVE NUMBER (AMC II) =   0
  INITIAL SUBAREA FLOW-LENGTH(FEET) =   100.00
  UPSTREAM ELEVATION(FEET) =    711.90
  DOWNSTREAM ELEVATION(FEET) =    709.90
  ELEVATION DIFFERENCE(FEET) =      2.00
```

```
  SUBAREA OVERLAND TIME OF FLOW(MIN.) =    4.984
  WARNING: INITIAL SUBAREA FLOW PATH LENGTH IS GREATER THAN
           THE MAXIMUM OVERLAND FLOW LENGTH =    80.00
           (Reference: Table 3-1B of Hydrology Manual)
           THE MAXIMUM OVERLAND FLOW LENGTH IS USED IN Tc CALCULATION!
   100 YEAR RAINFALL INTENSITY(INCH/HOUR) =  8.431
  NOTE: RAINFALL INTENSITY IS BASED ON Tc = 5-MINUTE.
  SUBAREA RUNOFF(CFS) =      1.14
  TOTAL AREA(ACRES) =      0.19   TOTAL RUNOFF(CFS) =      1.14

****************************************************************************
  FLOW PROCESS FROM NODE    253.70 TO NODE    253.10 IS CODE =  62
----------------------------------------------------------------------------
  >>>>>COMPUTE STREET FLOW TRAVEL TIME THRU SUBAREA<<<<<
  >>>>>(STREET TABLE SECTION #  1 USED)<<<<<
============================================================================
  UPSTREAM ELEVATION(FEET) =  709.90  DOWNSTREAM ELEVATION(FEET) =  696.00
  STREET LENGTH(FEET) =   340.00   CURB HEIGHT(INCHES) =  4.0
  STREET HALFWIDTH(FEET) = 16.00

  DISTANCE FROM CROWN TO CROSSFALL GRADEBREAK(FEET) =   8.00
  INSIDE STREET CROSSFALL(DECIMAL) =  0.020
  OUTSIDE STREET CROSSFALL(DECIMAL)  =  0.020

  SPECIFIED NUMBER OF HALFSTREETS CARRYING RUNOFF =  1
  STREET PARKWAY CROSSFALL(DECIMAL)  =  0.020
  Manning's FRICTION FACTOR for Streetflow Section(curb-to-curb) =   0.0150
  Manning's FRICTION FACTOR for Back-of-Walk Flow Section =   0.0150

    **TRAVEL TIME COMPUTED USING ESTIMATED FLOW(CFS) =       3.05
    STREETFLOW MODEL RESULTS USING ESTIMATED FLOW:
    STREET FLOW DEPTH(FEET) =  0.19
    HALFSTREET FLOOD WIDTH(FEET) =    8.84
    AVERAGE FLOW VELOCITY(FEET/SEC.) =    3.90
    PRODUCT OF DEPTH&VELOCITY(FT*FT/SEC.) =    0.76
  STREET FLOW TRAVEL TIME(MIN.) =   1.45   Tc(MIN.) =    6.44
   100 YEAR RAINFALL INTENSITY(INCH/HOUR) =  7.163
  *USER SPECIFIED(SUBAREA):
  USER-SPECIFIED RUNOFF COEFFICIENT = .7100
  S.C.S. CURVE NUMBER (AMC II) =   0
  AREA-AVERAGE RUNOFF COEFFICIENT =  0.710
  SUBAREA AREA(ACRES) =    0.75      SUBAREA RUNOFF(CFS) =    3.81
  TOTAL AREA(ACRES) =        0.9        PEAK FLOW RATE(CFS) =       4.78

  END OF SUBAREA STREET FLOW HYDRAULICS:
  DEPTH(FEET) = 0.23   HALFSTREET FLOOD WIDTH(FEET) =  10.47
  FLOW VELOCITY(FEET/SEC.) =  4.36   DEPTH*VELOCITY(FT*FT/SEC.) =   0.99
  LONGEST FLOWPATH FROM NODE    253.80 TO NODE    253.10 =     440.00 FEET.

****************************************************************************
  FLOW PROCESS FROM NODE    253.10 TO NODE    253.30 IS CODE =  31
----------------------------------------------------------------------------
  >>>>>COMPUTE PIPE-FLOW TRAVEL TIME THRU SUBAREA<<<<<
  >>>>>USING COMPUTER-ESTIMATED PIPESIZE (NON-PRESSURE FLOW)<<<<<
============================================================================
  ELEVATION DATA: UPSTREAM(FEET) =   690.70  DOWNSTREAM(FEET) =   690.30
  FLOW LENGTH(FEET) =    40.00   MANNING'S N =  0.013
  DEPTH OF FLOW IN  15.0 INCH PIPE IS  10.0 INCHES
  PIPE-FLOW VELOCITY(FEET/SEC.) =   5.52
  ESTIMATED PIPE DIAMETER(INCH) =  15.00    NUMBER OF PIPES =   1
  PIPE-FLOW(CFS) =       4.78
  PIPE TRAVEL TIME(MIN.) =   0.12    Tc(MIN.) =    6.56
  LONGEST FLOWPATH FROM NODE    253.80 TO NODE    253.30 =     480.00 FEET.
```

```
****************************************************************************
  FLOW PROCESS FROM NODE    253.30 TO NODE    253.30 IS CODE =   1
----------------------------------------------------------------------------
  >>>>>DESIGNATE INDEPENDENT STREAM FOR CONFLUENCE<<<<<
============================================================================
  TOTAL NUMBER OF STREAMS =  2
  CONFLUENCE VALUES USED FOR INDEPENDENT STREAM  1 ARE:
  TIME OF CONCENTRATION(MIN.) =    6.56
  RAINFALL INTENSITY(INCH/HR) =   7.08
  TOTAL STREAM AREA(ACRES) =     0.94
  PEAK FLOW RATE(CFS) AT CONFLUENCE =      4.78

****************************************************************************
  FLOW PROCESS FROM NODE    253.50 TO NODE    253.40 IS CODE =  21
----------------------------------------------------------------------------
  >>>>>RATIONAL METHOD INITIAL SUBAREA ANALYSIS<<<<<
============================================================================
  *USER SPECIFIED(SUBAREA):
  USER-SPECIFIED RUNOFF COEFFICIENT = .7100
  S.C.S. CURVE NUMBER (AMC II) =   0
  INITIAL SUBAREA FLOW-LENGTH(FEET) =   100.00
  UPSTREAM ELEVATION(FEET) =    709.11
  DOWNSTREAM ELEVATION(FEET) =    707.11
  ELEVATION DIFFERENCE(FEET) =      2.00
  SUBAREA OVERLAND TIME OF FLOW(MIN.) =    4.984
  WARNING: INITIAL SUBAREA FLOW PATH LENGTH IS GREATER THAN
           THE MAXIMUM OVERLAND FLOW LENGTH =    80.00
           (Reference: Table 3-1B of Hydrology Manual)
           THE MAXIMUM OVERLAND FLOW LENGTH IS USED IN Tc CALCULATION!
   100 YEAR RAINFALL INTENSITY(INCH/HOUR) =  8.431
  NOTE: RAINFALL INTENSITY IS BASED ON Tc = 5-MINUTE.
  SUBAREA RUNOFF(CFS) =      1.26
  TOTAL AREA(ACRES) =      0.21   TOTAL RUNOFF(CFS) =      1.26

****************************************************************************
  FLOW PROCESS FROM NODE    253.40 TO NODE    253.30 IS CODE =  62
----------------------------------------------------------------------------
  >>>>>COMPUTE STREET FLOW TRAVEL TIME THRU SUBAREA<<<<<
  >>>>>(STREET TABLE SECTION #  1 USED)<<<<<
============================================================================
  UPSTREAM ELEVATION(FEET) =  707.00  DOWNSTREAM ELEVATION(FEET) =  696.00
  STREET LENGTH(FEET) =   350.00   CURB HEIGHT(INCHES) =  4.0
  STREET HALFWIDTH(FEET) = 16.00

  DISTANCE FROM CROWN TO CROSSFALL GRADEBREAK(FEET) =   8.00
  INSIDE STREET CROSSFALL(DECIMAL) =  0.020
  OUTSIDE STREET CROSSFALL(DECIMAL)  =  0.020

  SPECIFIED NUMBER OF HALFSTREETS CARRYING RUNOFF =  1
  STREET PARKWAY CROSSFALL(DECIMAL)  =  0.020
  Manning's FRICTION FACTOR for Streetflow Section(curb-to-curb) =   0.0150
  Manning's FRICTION FACTOR for Back-of-Walk Flow Section =   0.0150

    **TRAVEL TIME COMPUTED USING ESTIMATED FLOW(CFS) =       2.83
    STREETFLOW MODEL RESULTS USING ESTIMATED FLOW:
    STREET FLOW DEPTH(FEET) =  0.20
    HALFSTREET FLOOD WIDTH(FEET) =    9.03
    AVERAGE FLOW VELOCITY(FEET/SEC.) =    3.47
    PRODUCT OF DEPTH&VELOCITY(FT*FT/SEC.) =    0.69
  STREET FLOW TRAVEL TIME(MIN.) =   1.68   Tc(MIN.) =    6.67
   100 YEAR RAINFALL INTENSITY(INCH/HOUR) =  7.004
  *USER SPECIFIED(SUBAREA):
```

```
  USER-SPECIFIED RUNOFF COEFFICIENT = .7100
  S.C.S. CURVE NUMBER (AMC II) =   0
  AREA-AVERAGE RUNOFF COEFFICIENT =  0.710
  SUBAREA AREA(ACRES) =    0.63      SUBAREA RUNOFF(CFS) =    3.13
  TOTAL AREA(ACRES) =        0.8        PEAK FLOW RATE(CFS) =       4.18

  END OF SUBAREA STREET FLOW HYDRAULICS:
  DEPTH(FEET) = 0.23   HALFSTREET FLOOD WIDTH(FEET) =  10.41
  FLOW VELOCITY(FEET/SEC.) =  3.85   DEPTH*VELOCITY(FT*FT/SEC.) =   0.87
  LONGEST FLOWPATH FROM NODE    253.50 TO NODE    253.30 =     450.00 FEET.

****************************************************************************
  FLOW PROCESS FROM NODE    253.30 TO NODE    253.30 IS CODE =   1
----------------------------------------------------------------------------
  >>>>>DESIGNATE INDEPENDENT STREAM FOR CONFLUENCE<<<<<
  >>>>>AND COMPUTE VARIOUS CONFLUENCED STREAM VALUES<<<<<
============================================================================
  TOTAL NUMBER OF STREAMS =  2
  CONFLUENCE VALUES USED FOR INDEPENDENT STREAM  2 ARE:
  TIME OF CONCENTRATION(MIN.) =    6.67
  RAINFALL INTENSITY(INCH/HR) =   7.00
  TOTAL STREAM AREA(ACRES) =     0.84
  PEAK FLOW RATE(CFS) AT CONFLUENCE =      4.18

  ** CONFLUENCE DATA **
  STREAM     RUNOFF       Tc      INTENSITY      AREA
  NUMBER      (CFS)     (MIN.)   (INCH/HOUR)    (ACRE)
      1        4.78     6.56        7.078          0.94
      2        4.18     6.67        7.004          0.84

  RAINFALL INTENSITY AND TIME OF CONCENTRATION RATIO
  CONFLUENCE FORMULA USED FOR  2 STREAMS.

  ** PEAK FLOW RATE TABLE **
  STREAM     RUNOFF      Tc      INTENSITY
  NUMBER      (CFS)    (MIN.)   (INCH/HOUR)
      1        8.89     6.56       7.078
      2        8.91     6.67       7.004

  COMPUTED CONFLUENCE ESTIMATES ARE AS FOLLOWS:
  PEAK FLOW RATE(CFS) =       8.91   Tc(MIN.) =    6.67
  TOTAL AREA(ACRES) =        1.8
  LONGEST FLOWPATH FROM NODE    253.80 TO NODE    253.30 =     480.00 FEET.

****************************************************************************
  FLOW PROCESS FROM NODE    253.30 TO NODE    253.20 IS CODE =  31
----------------------------------------------------------------------------
  >>>>>COMPUTE PIPE-FLOW TRAVEL TIME THRU SUBAREA<<<<<
  >>>>>USING COMPUTER-ESTIMATED PIPESIZE (NON-PRESSURE FLOW)<<<<<
============================================================================
  ELEVATION DATA: UPSTREAM(FEET) =   690.30  DOWNSTREAM(FEET) =   690.00
  FLOW LENGTH(FEET) =    25.00   MANNING'S N =  0.013
  DEPTH OF FLOW IN  18.0 INCH PIPE IS  12.4 INCHES
  PIPE-FLOW VELOCITY(FEET/SEC.) =   6.89
  ESTIMATED PIPE DIAMETER(INCH) =  18.00    NUMBER OF PIPES =   1
  PIPE-FLOW(CFS) =       8.91
  PIPE TRAVEL TIME(MIN.) =   0.06    Tc(MIN.) =    6.73
  LONGEST FLOWPATH FROM NODE    253.80 TO NODE    253.20 =     505.00 FEET.

****************************************************************************
  FLOW PROCESS FROM NODE    253.20 TO NODE    250.60 IS CODE =  31
----------------------------------------------------------------------------
  >>>>>COMPUTE PIPE-FLOW TRAVEL TIME THRU SUBAREA<<<<<
```

```
  >>>>>USING COMPUTER-ESTIMATED PIPESIZE (NON-PRESSURE FLOW)<<<<<
==============================================================================
  ELEVATION DATA: UPSTREAM(FEET) =   690.00  DOWNSTREAM(FEET) =   684.80
  FLOW LENGTH(FEET) =   240.00   MANNING'S N =  0.013
  DEPTH OF FLOW IN  15.0 INCH PIPE IS  12.1 INCHES
  PIPE-FLOW VELOCITY(FEET/SEC.) =   8.38
  ESTIMATED PIPE DIAMETER(INCH) =  15.00    NUMBER OF PIPES =   1
  PIPE-FLOW(CFS) =       8.91
  PIPE TRAVEL TIME(MIN.) =   0.48    Tc(MIN.) =    7.20
  LONGEST FLOWPATH FROM NODE    253.80 TO NODE    250.60 =     745.00 FEET.

****************************************************************************
  FLOW PROCESS FROM NODE    250.60 TO NODE    250.60 IS CODE =  10
----------------------------------------------------------------------------
  >>>>>MAIN-STREAM MEMORY COPIED ONTO MEMORY BANK # 2 <<<<<
==============================================================================

****************************************************************************
  FLOW PROCESS FROM NODE    238.00 TO NODE    239.00 IS CODE =  21
----------------------------------------------------------------------------
  >>>>>RATIONAL METHOD INITIAL SUBAREA ANALYSIS<<<<<
==============================================================================
  *USER SPECIFIED(SUBAREA):
  USER-SPECIFIED RUNOFF COEFFICIENT = .3500
  S.C.S. CURVE NUMBER (AMC II) =   0
  INITIAL SUBAREA FLOW-LENGTH(FEET) =    80.00
  UPSTREAM ELEVATION(FEET) =    864.00
  DOWNSTREAM ELEVATION(FEET) =    852.00
  ELEVATION DIFFERENCE(FEET) =     12.00
  SUBAREA OVERLAND TIME OF FLOW(MIN.) =    5.605
  WARNING: THE MAXIMUM OVERLAND FLOW SLOPE, 10.%, IS USED IN Tc CALCULATION!
   100 YEAR RAINFALL INTENSITY(INCH/HOUR) =  7.832
  SUBAREA RUNOFF(CFS) =      0.55
  TOTAL AREA(ACRES) =      0.20   TOTAL RUNOFF(CFS) =      0.55

****************************************************************************
  FLOW PROCESS FROM NODE    239.00 TO NODE    240.00 IS CODE =  51
----------------------------------------------------------------------------
  >>>>>COMPUTE TRAPEZOIDAL CHANNEL FLOW<<<<<
  >>>>>TRAVELTIME THRU SUBAREA (EXISTING ELEMENT)<<<<<
==============================================================================
  ELEVATION DATA: UPSTREAM(FEET) =    852.00  DOWNSTREAM(FEET) =    770.00
  CHANNEL LENGTH THRU SUBAREA(FEET) =   370.00   CHANNEL SLOPE =  0.2216
  CHANNEL BASE(FEET) =    3.00   "Z" FACTOR =   2.000
  MANNING'S FACTOR = 0.030   MAXIMUM DEPTH(FEET) =  10.00
   100 YEAR RAINFALL INTENSITY(INCH/HOUR) =  7.050
  *USER SPECIFIED(SUBAREA):
  USER-SPECIFIED RUNOFF COEFFICIENT = .3500
  S.C.S. CURVE NUMBER (AMC II) =   0
  TRAVEL TIME COMPUTED USING ESTIMATED FLOW(CFS) =       3.20
  TRAVEL TIME THRU SUBAREA BASED ON VELOCITY(FEET/SEC.) =   6.21
  AVERAGE FLOW DEPTH(FEET) =   0.16   TRAVEL TIME(MIN.) =   0.99
  Tc(MIN.) =    6.60
  SUBAREA AREA(ACRES) =     2.14       SUBAREA RUNOFF(CFS) =    5.28
  AREA-AVERAGE RUNOFF COEFFICIENT =  0.350
  TOTAL AREA(ACRES) =        2.3         PEAK FLOW RATE(CFS) =       5.77

  END OF SUBAREA CHANNEL FLOW HYDRAULICS:
  DEPTH(FEET) =  0.22   FLOW VELOCITY(FEET/SEC.) =   7.69
  LONGEST FLOWPATH FROM NODE    238.00 TO NODE    240.00 =     450.00 FEET.

****************************************************************************
  FLOW PROCESS FROM NODE    240.00 TO NODE    241.00 IS CODE =  31
```

```
----------------------------------------------------------------------------
  >>>>>COMPUTE PIPE-FLOW TRAVEL TIME THRU SUBAREA<<<<<
  >>>>>USING COMPUTER-ESTIMATED PIPESIZE (NON-PRESSURE FLOW)<<<<<
============================================================================
  ELEVATION DATA: UPSTREAM(FEET) =   767.00  DOWNSTREAM(FEET) =   733.70
  FLOW LENGTH(FEET) =    75.00   MANNING'S N =  0.013
  ESTIMATED PIPE DIAMETER(INCH) INCREASED TO 12.000
  DEPTH OF FLOW IN  12.0 INCH PIPE IS   4.1 INCHES
  PIPE-FLOW VELOCITY(FEET/SEC.) =  24.02
  ESTIMATED PIPE DIAMETER(INCH) =  12.00    NUMBER OF PIPES =   1
  PIPE-FLOW(CFS) =       5.77
  PIPE TRAVEL TIME(MIN.) =   0.05    Tc(MIN.) =    6.65
  LONGEST FLOWPATH FROM NODE    238.00 TO NODE    241.00 =     525.00 FEET.

****************************************************************************
  FLOW PROCESS FROM NODE    241.00 TO NODE    243.50 IS CODE =  31
----------------------------------------------------------------------------
  >>>>>COMPUTE PIPE-FLOW TRAVEL TIME THRU SUBAREA<<<<<
  >>>>>USING COMPUTER-ESTIMATED PIPESIZE (NON-PRESSURE FLOW)<<<<<
============================================================================
  ELEVATION DATA: UPSTREAM(FEET) =   733.70  DOWNSTREAM(FEET) =   731.00
  FLOW LENGTH(FEET) =   270.00   MANNING'S N =  0.013
  DEPTH OF FLOW IN  15.0 INCH PIPE IS  11.6 INCHES
  PIPE-FLOW VELOCITY(FEET/SEC.) =   5.68
  ESTIMATED PIPE DIAMETER(INCH) =  15.00    NUMBER OF PIPES =   1
  PIPE-FLOW(CFS) =       5.77
  PIPE TRAVEL TIME(MIN.) =   0.79    Tc(MIN.) =    7.44
  LONGEST FLOWPATH FROM NODE    238.00 TO NODE    243.50 =     795.00 FEET.

****************************************************************************
  FLOW PROCESS FROM NODE    243.50 TO NODE    243.50 IS CODE =   1
----------------------------------------------------------------------------
  >>>>>DESIGNATE INDEPENDENT STREAM FOR CONFLUENCE<<<<<
============================================================================
  TOTAL NUMBER OF STREAMS =  2
  CONFLUENCE VALUES USED FOR INDEPENDENT STREAM  1 ARE:
  TIME OF CONCENTRATION(MIN.) =    7.44
  RAINFALL INTENSITY(INCH/HR) =   6.52
  TOTAL STREAM AREA(ACRES) =     2.34
  PEAK FLOW RATE(CFS) AT CONFLUENCE =      5.77

****************************************************************************
  FLOW PROCESS FROM NODE    242.00 TO NODE    243.00 IS CODE =  21
----------------------------------------------------------------------------
  >>>>>RATIONAL METHOD INITIAL SUBAREA ANALYSIS<<<<<
============================================================================
  *USER SPECIFIED(SUBAREA):
  USER-SPECIFIED RUNOFF COEFFICIENT = .3500
  S.C.S. CURVE NUMBER (AMC II) =   0
  INITIAL SUBAREA FLOW-LENGTH(FEET) =   400.00
  UPSTREAM ELEVATION(FEET) =    864.00
  DOWNSTREAM ELEVATION(FEET) =    750.00
  ELEVATION DIFFERENCE(FEET) =    114.00
  SUBAREA OVERLAND TIME OF FLOW(MIN.) =    6.267
  WARNING: INITIAL SUBAREA FLOW PATH LENGTH IS GREATER THAN
           THE MAXIMUM OVERLAND FLOW LENGTH =   100.00
           (Reference: Table 3-1B of Hydrology Manual)
           THE MAXIMUM OVERLAND FLOW LENGTH IS USED IN Tc CALCULATION!
   100 YEAR RAINFALL INTENSITY(INCH/HOUR) =  7.288
  SUBAREA RUNOFF(CFS) =      4.59
  TOTAL AREA(ACRES) =      1.80   TOTAL RUNOFF(CFS) =      4.59

****************************************************************************
```

```
  FLOW PROCESS FROM NODE    243.00 TO NODE    243.50 IS CODE =  51
----------------------------------------------------------------------
  >>>>>COMPUTE TRAPEZOIDAL CHANNEL FLOW<<<<<
  >>>>>TRAVELTIME THRU SUBAREA (EXISTING ELEMENT)<<<<<
======================================================================
  ELEVATION DATA: UPSTREAM(FEET) =    750.00  DOWNSTREAM(FEET) =    731.00
  CHANNEL LENGTH THRU SUBAREA(FEET) =   145.00   CHANNEL SLOPE =  0.1310
  CHANNEL BASE(FEET) =    3.00   "Z" FACTOR =   2.000
  MANNING'S FACTOR = 0.030   MAXIMUM DEPTH(FEET) =  10.00
   100 YEAR RAINFALL INTENSITY(INCH/HOUR) =  7.025
  *USER SPECIFIED(SUBAREA):
  USER-SPECIFIED RUNOFF COEFFICIENT = .7100
  S.C.S. CURVE NUMBER (AMC II) =   0
  TRAVEL TIME COMPUTED USING ESTIMATED FLOW(CFS) =       6.26
  TRAVEL TIME THRU SUBAREA BASED ON VELOCITY(FEET/SEC.) =   6.55
  AVERAGE FLOW DEPTH(FEET) =   0.27   TRAVEL TIME(MIN.) =   0.37
  Tc(MIN.) =    6.64
  SUBAREA AREA(ACRES) =     0.67       SUBAREA RUNOFF(CFS) =    3.34
  AREA-AVERAGE RUNOFF COEFFICIENT =  0.448
  TOTAL AREA(ACRES) =        2.5         PEAK FLOW RATE(CFS) =       7.77

  END OF SUBAREA CHANNEL FLOW HYDRAULICS:
  DEPTH(FEET) =  0.30   FLOW VELOCITY(FEET/SEC.) =   7.13
  LONGEST FLOWPATH FROM NODE    242.00 TO NODE    243.50 =     545.00 FEET.

****************************************************************************
  FLOW PROCESS FROM NODE    243.50 TO NODE    243.50 IS CODE =   1
----------------------------------------------------------------------
  >>>>>DESIGNATE INDEPENDENT STREAM FOR CONFLUENCE<<<<<
  >>>>>AND COMPUTE VARIOUS CONFLUENCED STREAM VALUES<<<<<
======================================================================
  TOTAL NUMBER OF STREAMS =  2
  CONFLUENCE VALUES USED FOR INDEPENDENT STREAM  2 ARE:
  TIME OF CONCENTRATION(MIN.) =    6.64
  RAINFALL INTENSITY(INCH/HR) =   7.02
  TOTAL STREAM AREA(ACRES) =     2.47
  PEAK FLOW RATE(CFS) AT CONFLUENCE =      7.77

  ** CONFLUENCE DATA **
  STREAM     RUNOFF       Tc      INTENSITY      AREA
  NUMBER      (CFS)     (MIN.)   (INCH/HOUR)    (ACRE)
      1        5.77     7.44        6.524          2.34
      2        7.77     6.64        7.025          2.47

  RAINFALL INTENSITY AND TIME OF CONCENTRATION RATIO
  CONFLUENCE FORMULA USED FOR  2 STREAMS.

  ** PEAK FLOW RATE TABLE **
  STREAM     RUNOFF      Tc      INTENSITY
  NUMBER      (CFS)    (MIN.)   (INCH/HOUR)
      1       12.92     6.64       7.025
      2       12.99     7.44       6.524

  COMPUTED CONFLUENCE ESTIMATES ARE AS FOLLOWS:
  PEAK FLOW RATE(CFS) =      12.99   Tc(MIN.) =    7.44
  TOTAL AREA(ACRES) =        4.8
  LONGEST FLOWPATH FROM NODE    238.00 TO NODE    243.50 =     795.00 FEET.

****************************************************************************
  FLOW PROCESS FROM NODE    243.50 TO NODE    244.00 IS CODE =  52
----------------------------------------------------------------------
  >>>>>COMPUTE NATURAL VALLEY CHANNEL FLOW<<<<<
  >>>>>TRAVELTIME THRU SUBAREA<<<<<
```

```
==============================================================================
  ELEVATION DATA: UPSTREAM(FEET) =    731.00  DOWNSTREAM(FEET) =    726.00
  CHANNEL LENGTH THRU SUBAREA(FEET) =    65.00   CHANNEL SLOPE =  0.0769
  CHANNEL FLOW THRU SUBAREA(CFS) =      12.99
  FLOW VELOCITY(FEET/SEC) =   7.41 (PER LACFCD/RCFC&WCD HYDROLOGY MANUAL)
  TRAVEL TIME(MIN.) =   0.15   Tc(MIN.) =    7.59
  LONGEST FLOWPATH FROM NODE    238.00 TO NODE    244.00 =     860.00 FEET.

****************************************************************************
  FLOW PROCESS FROM NODE    244.00 TO NODE    246.00 IS CODE =  31
----------------------------------------------------------------------------
  >>>>>COMPUTE PIPE-FLOW TRAVEL TIME THRU SUBAREA<<<<<
  >>>>>USING COMPUTER-ESTIMATED PIPESIZE (NON-PRESSURE FLOW)<<<<<
==============================================================================
  ELEVATION DATA: UPSTREAM(FEET) =   726.00  DOWNSTREAM(FEET) =   724.00
  FLOW LENGTH(FEET) =    75.00   MANNING'S N =  0.013
  DEPTH OF FLOW IN  18.0 INCH PIPE IS  12.2 INCHES
  PIPE-FLOW VELOCITY(FEET/SEC.) =  10.23
  ESTIMATED PIPE DIAMETER(INCH) =  18.00    NUMBER OF PIPES =   1
  PIPE-FLOW(CFS) =      12.99
  PIPE TRAVEL TIME(MIN.) =   0.12    Tc(MIN.) =    7.71
  LONGEST FLOWPATH FROM NODE    238.00 TO NODE    246.00 =     935.00 FEET.

****************************************************************************
  FLOW PROCESS FROM NODE    246.00 TO NODE    246.50 IS CODE =  51
----------------------------------------------------------------------------
  >>>>>COMPUTE TRAPEZOIDAL CHANNEL FLOW<<<<<
  >>>>>TRAVELTIME THRU SUBAREA (EXISTING ELEMENT)<<<<<
==============================================================================
  ELEVATION DATA: UPSTREAM(FEET) =    724.00  DOWNSTREAM(FEET) =    686.50
  CHANNEL LENGTH THRU SUBAREA(FEET) =   500.00   CHANNEL SLOPE =  0.0750
  CHANNEL BASE(FEET) =    3.00   "Z" FACTOR =   2.000
  MANNING'S FACTOR = 0.030   MAXIMUM DEPTH(FEET) =  10.00
   100 YEAR RAINFALL INTENSITY(INCH/HOUR) =  5.849
  *USER SPECIFIED(SUBAREA):
  USER-SPECIFIED RUNOFF COEFFICIENT = .7100
  S.C.S. CURVE NUMBER (AMC II) =   0
  TRAVEL TIME COMPUTED USING ESTIMATED FLOW(CFS) =      17.17
  TRAVEL TIME THRU SUBAREA BASED ON VELOCITY(FEET/SEC.) =   7.54
  AVERAGE FLOW DEPTH(FEET) =   0.55   TRAVEL TIME(MIN.) =   1.10
  Tc(MIN.) =    8.81
  SUBAREA AREA(ACRES) =     2.02       SUBAREA RUNOFF(CFS) =    8.39
  AREA-AVERAGE RUNOFF COEFFICIENT =  0.492
  TOTAL AREA(ACRES) =        6.8         PEAK FLOW RATE(CFS) =      19.65

  END OF SUBAREA CHANNEL FLOW HYDRAULICS:
  DEPTH(FEET) =  0.60   FLOW VELOCITY(FEET/SEC.) =   7.83
  LONGEST FLOWPATH FROM NODE    238.00 TO NODE    246.50 =    1435.00 FEET.

****************************************************************************
  FLOW PROCESS FROM NODE    246.50 TO NODE    246.50 IS CODE =  11
----------------------------------------------------------------------------
  >>>>>CONFLUENCE MEMORY BANK # 1 WITH THE MAIN-STREAM MEMORY<<<<<
==============================================================================

  ** MAIN STREAM CONFLUENCE DATA **
  STREAM     RUNOFF      Tc      INTENSITY     AREA
  NUMBER      (CFS)    (MIN.)   (INCH/HOUR)   (ACRE)
      1       19.65     8.81       5.849        6.83
  LONGEST FLOWPATH FROM NODE    238.00 TO NODE    246.50 =    1435.00 FEET.

  ** MEMORY BANK #  1 CONFLUENCE DATA **
  STREAM     RUNOFF      Tc      INTENSITY     AREA
```

```
  NUMBER      (CFS)    (MIN.)   (INCH/HOUR)   (ACRE)
      1      142.98     8.84       5.836       44.86
  LONGEST FLOWPATH FROM NODE    216.00 TO NODE    246.50 =    3185.00 FEET.

  ** PEAK FLOW RATE TABLE **
  STREAM    RUNOFF       Tc      INTENSITY
  NUMBER     (CFS)     (MIN.)   (INCH/HOUR)
      1     162.15       8.81        5.849
      2     162.58       8.84        5.836

  COMPUTED CONFLUENCE ESTIMATES ARE AS FOLLOWS:
  PEAK FLOW RATE(CFS) =     162.58   Tc(MIN.) =    8.84
  TOTAL AREA(ACRES) =       51.7

****************************************************************************
  FLOW PROCESS FROM NODE    246.50 TO NODE    246.50 IS CODE =  12
----------------------------------------------------------------------------
  >>>>>CLEAR MEMORY BANK # 1 <<<<<
============================================================================

****************************************************************************
  FLOW PROCESS FROM NODE    246.50 TO NODE    250.00 IS CODE =  31
----------------------------------------------------------------------------
  >>>>>COMPUTE PIPE-FLOW TRAVEL TIME THRU SUBAREA<<<<<
  >>>>>USING COMPUTER-ESTIMATED PIPESIZE (NON-PRESSURE FLOW)<<<<<
============================================================================
  ELEVATION DATA: UPSTREAM(FEET) =   684.33  DOWNSTREAM(FEET) =   684.21
  FLOW LENGTH(FEET) =    25.00   MANNING'S N =  0.013
  DEPTH OF FLOW IN  60.0 INCH PIPE IS  46.7 INCHES
  PIPE-FLOW VELOCITY(FEET/SEC.) =   9.92
  ESTIMATED PIPE DIAMETER(INCH) =  60.00    NUMBER OF PIPES =   1
  PIPE-FLOW(CFS) =     162.58
  PIPE TRAVEL TIME(MIN.) =   0.04    Tc(MIN.) =    8.89
  LONGEST FLOWPATH FROM NODE    216.00 TO NODE    250.00 =    3210.00 FEET.

****************************************************************************
  FLOW PROCESS FROM NODE    250.00 TO NODE    250.00 IS CODE =  10
----------------------------------------------------------------------------
  >>>>>MAIN-STREAM MEMORY COPIED ONTO MEMORY BANK # 1 <<<<<
============================================================================

****************************************************************************
  FLOW PROCESS FROM NODE    247.00 TO NODE    248.00 IS CODE =  21
----------------------------------------------------------------------------
  >>>>>RATIONAL METHOD INITIAL SUBAREA ANALYSIS<<<<<
============================================================================
  *USER SPECIFIED(SUBAREA):
  USER-SPECIFIED RUNOFF COEFFICIENT = .3500
  S.C.S. CURVE NUMBER (AMC II) =   0
  INITIAL SUBAREA FLOW-LENGTH(FEET) =   180.00
  UPSTREAM ELEVATION(FEET) =    862.00
  DOWNSTREAM ELEVATION(FEET) =    828.00
  ELEVATION DIFFERENCE(FEET) =     34.00
  SUBAREA OVERLAND TIME OF FLOW(MIN.) =    6.267
  WARNING: INITIAL SUBAREA FLOW PATH LENGTH IS GREATER THAN
           THE MAXIMUM OVERLAND FLOW LENGTH =   100.00
           (Reference: Table 3-1B of Hydrology Manual)
           THE MAXIMUM OVERLAND FLOW LENGTH IS USED IN Tc CALCULATION!
   100 YEAR RAINFALL INTENSITY(INCH/HOUR) =  7.288
  SUBAREA RUNOFF(CFS) =      0.77
  TOTAL AREA(ACRES) =      0.30   TOTAL RUNOFF(CFS) =      0.77

****************************************************************************
```

```
  FLOW PROCESS FROM NODE    248.00 TO NODE    249.00 IS CODE =  51
----------------------------------------------------------------------------
  >>>>>COMPUTE TRAPEZOIDAL CHANNEL FLOW<<<<<
  >>>>>TRAVELTIME THRU SUBAREA (EXISTING ELEMENT)<<<<<
============================================================================
  ELEVATION DATA: UPSTREAM(FEET) =    828.00  DOWNSTREAM(FEET) =    716.00
  CHANNEL LENGTH THRU SUBAREA(FEET) =  1030.00   CHANNEL SLOPE =  0.1087
  CHANNEL BASE(FEET) =    3.00   "Z" FACTOR =   2.000
  MANNING'S FACTOR = 0.030   MAXIMUM DEPTH(FEET) =  10.00
   100 YEAR RAINFALL INTENSITY(INCH/HOUR) =  5.849
  *USER SPECIFIED(SUBAREA):
  USER-SPECIFIED RUNOFF COEFFICIENT = .3500
  S.C.S. CURVE NUMBER (AMC II) =   0
  TRAVEL TIME COMPUTED USING ESTIMATED FLOW(CFS) =       7.78
  TRAVEL TIME THRU SUBAREA BASED ON VELOCITY(FEET/SEC.) =   6.74
  AVERAGE FLOW DEPTH(FEET) =   0.32   TRAVEL TIME(MIN.) =   2.55
  Tc(MIN.) =    8.81
  SUBAREA AREA(ACRES) =     6.78       SUBAREA RUNOFF(CFS) =   13.88
  AREA-AVERAGE RUNOFF COEFFICIENT =  0.350
  TOTAL AREA(ACRES) =        7.1         PEAK FLOW RATE(CFS) =      14.49

  END OF SUBAREA CHANNEL FLOW HYDRAULICS:
  DEPTH(FEET) =  0.45   FLOW VELOCITY(FEET/SEC.) =   8.15
  LONGEST FLOWPATH FROM NODE    247.00 TO NODE    249.00 =    1210.00 FEET.

****************************************************************************
  FLOW PROCESS FROM NODE    249.00 TO NODE    249.00 IS CODE =   1
----------------------------------------------------------------------------
  >>>>>DESIGNATE INDEPENDENT STREAM FOR CONFLUENCE<<<<<
============================================================================
  TOTAL NUMBER OF STREAMS =  2
  CONFLUENCE VALUES USED FOR INDEPENDENT STREAM  1 ARE:
  TIME OF CONCENTRATION(MIN.) =    8.81
  RAINFALL INTENSITY(INCH/HR) =   5.85
  TOTAL STREAM AREA(ACRES) =     7.08
  PEAK FLOW RATE(CFS) AT CONFLUENCE =     14.49

****************************************************************************
  FLOW PROCESS FROM NODE    251.00 TO NODE    252.00 IS CODE =  21
----------------------------------------------------------------------------
  >>>>>RATIONAL METHOD INITIAL SUBAREA ANALYSIS<<<<<
============================================================================
  *USER SPECIFIED(SUBAREA):
  USER-SPECIFIED RUNOFF COEFFICIENT = .3500
  S.C.S. CURVE NUMBER (AMC II) =   0
  INITIAL SUBAREA FLOW-LENGTH(FEET) =   270.00
  UPSTREAM ELEVATION(FEET) =    790.00
  DOWNSTREAM ELEVATION(FEET) =    780.00
  ELEVATION DIFFERENCE(FEET) =     10.00
  SUBAREA OVERLAND TIME OF FLOW(MIN.) =    8.583
  WARNING: INITIAL SUBAREA FLOW PATH LENGTH IS GREATER THAN
           THE MAXIMUM OVERLAND FLOW LENGTH =    96.76
           (Reference: Table 3-1B of Hydrology Manual)
           THE MAXIMUM OVERLAND FLOW LENGTH IS USED IN Tc CALCULATION!
   100 YEAR RAINFALL INTENSITY(INCH/HOUR) =  5.950
  SUBAREA RUNOFF(CFS) =      1.31
  TOTAL AREA(ACRES) =      0.63   TOTAL RUNOFF(CFS) =      1.31

****************************************************************************
  FLOW PROCESS FROM NODE    252.00 TO NODE    249.00 IS CODE =  51
----------------------------------------------------------------------------
  >>>>>COMPUTE TRAPEZOIDAL CHANNEL FLOW<<<<<
  >>>>>TRAVELTIME THRU SUBAREA (EXISTING ELEMENT)<<<<<
```

```
==============================================================================
  ELEVATION DATA: UPSTREAM(FEET) =    780.00  DOWNSTREAM(FEET) =    718.00
  CHANNEL LENGTH THRU SUBAREA(FEET) =   420.00   CHANNEL SLOPE =  0.1476
  CHANNEL BASE(FEET) =    3.00   "Z" FACTOR =   2.000
  MANNING'S FACTOR = 0.030   MAXIMUM DEPTH(FEET) =  10.00
   100 YEAR RAINFALL INTENSITY(INCH/HOUR) =  5.492
  *USER SPECIFIED(SUBAREA):
  USER-SPECIFIED RUNOFF COEFFICIENT = .3500
  S.C.S. CURVE NUMBER (AMC II) =   0
  TRAVEL TIME COMPUTED USING ESTIMATED FLOW(CFS) =       4.45
  TRAVEL TIME THRU SUBAREA BASED ON VELOCITY(FEET/SEC.) =   6.17
  AVERAGE FLOW DEPTH(FEET) =   0.21   TRAVEL TIME(MIN.) =   1.13
  Tc(MIN.) =    9.72
  SUBAREA AREA(ACRES) =     3.26       SUBAREA RUNOFF(CFS) =    6.27
  AREA-AVERAGE RUNOFF COEFFICIENT =  0.350
  TOTAL AREA(ACRES) =        3.9         PEAK FLOW RATE(CFS) =       7.48

  END OF SUBAREA CHANNEL FLOW HYDRAULICS:
  DEPTH(FEET) =  0.29   FLOW VELOCITY(FEET/SEC.) =   7.34
  LONGEST FLOWPATH FROM NODE    251.00 TO NODE    249.00 =     690.00 FEET.

****************************************************************************
  FLOW PROCESS FROM NODE    249.00 TO NODE    249.00 IS CODE =   1
----------------------------------------------------------------------------
  >>>>>DESIGNATE INDEPENDENT STREAM FOR CONFLUENCE<<<<<
  >>>>>AND COMPUTE VARIOUS CONFLUENCED STREAM VALUES<<<<<
==============================================================================
  TOTAL NUMBER OF STREAMS =  2
  CONFLUENCE VALUES USED FOR INDEPENDENT STREAM  2 ARE:
  TIME OF CONCENTRATION(MIN.) =    9.72
  RAINFALL INTENSITY(INCH/HR) =   5.49
  TOTAL STREAM AREA(ACRES) =     3.89
  PEAK FLOW RATE(CFS) AT CONFLUENCE =      7.48

  ** CONFLUENCE DATA **
  STREAM     RUNOFF       Tc      INTENSITY      AREA
  NUMBER      (CFS)     (MIN.)   (INCH/HOUR)    (ACRE)
      1       14.49     8.81        5.849         7.08
      2        7.48     9.72        5.492         3.89

  RAINFALL INTENSITY AND TIME OF CONCENTRATION RATIO
  CONFLUENCE FORMULA USED FOR  2 STREAMS.

  ** PEAK FLOW RATE TABLE **
  STREAM     RUNOFF      Tc      INTENSITY
  NUMBER      (CFS)    (MIN.)   (INCH/HOUR)
      1       21.28     8.81       5.849
      2       21.09     9.72       5.492

  COMPUTED CONFLUENCE ESTIMATES ARE AS FOLLOWS:
  PEAK FLOW RATE(CFS) =      21.28   Tc(MIN.) =    8.81
  TOTAL AREA(ACRES) =       11.0
  LONGEST FLOWPATH FROM NODE    247.00 TO NODE    249.00 =    1210.00 FEET.

****************************************************************************
  FLOW PROCESS FROM NODE    249.00 TO NODE    250.00 IS CODE =  52
----------------------------------------------------------------------------
  >>>>>COMPUTE NATURAL VALLEY CHANNEL FLOW<<<<<
  >>>>>TRAVELTIME THRU SUBAREA<<<<<
==============================================================================
  ELEVATION DATA: UPSTREAM(FEET) =    718.00  DOWNSTREAM(FEET) =    686.00
  CHANNEL LENGTH THRU SUBAREA(FEET) =   350.00   CHANNEL SLOPE =  0.0914
  CHANNEL FLOW THRU SUBAREA(CFS) =      21.28
```

```
  FLOW VELOCITY(FEET/SEC) =   9.21 (PER LACFCD/RCFC&WCD HYDROLOGY MANUAL)
  TRAVEL TIME(MIN.) =   0.63   Tc(MIN.) =    9.45
  LONGEST FLOWPATH FROM NODE    247.00 TO NODE    250.00 =    1560.00 FEET.

****************************************************************************
  FLOW PROCESS FROM NODE    250.00 TO NODE    250.00 IS CODE =  11
----------------------------------------------------------------------------
  >>>>>CONFLUENCE MEMORY BANK # 1 WITH THE MAIN-STREAM MEMORY<<<<<
============================================================================

  ** MAIN STREAM CONFLUENCE DATA **
  STREAM     RUNOFF      Tc      INTENSITY     AREA
  NUMBER      (CFS)    (MIN.)   (INCH/HOUR)   (ACRE)
      1       21.28     9.45       5.593       10.97
  LONGEST FLOWPATH FROM NODE    247.00 TO NODE    250.00 =    1560.00 FEET.

  ** MEMORY BANK #  1 CONFLUENCE DATA **
  STREAM     RUNOFF      Tc      INTENSITY     AREA
  NUMBER      (CFS)    (MIN.)   (INCH/HOUR)   (ACRE)
      1      162.58     8.89       5.819       51.69
  LONGEST FLOWPATH FROM NODE    216.00 TO NODE    250.00 =    3210.00 FEET.

  ** PEAK FLOW RATE TABLE **
  STREAM    RUNOFF       Tc      INTENSITY
  NUMBER     (CFS)     (MIN.)   (INCH/HOUR)
      1     182.59       8.89        5.819
      2     177.55       9.45        5.593

  COMPUTED CONFLUENCE ESTIMATES ARE AS FOLLOWS:
  PEAK FLOW RATE(CFS) =     182.59   Tc(MIN.) =    8.89
  TOTAL AREA(ACRES) =       62.7

****************************************************************************
  FLOW PROCESS FROM NODE    250.00 TO NODE    250.00 IS CODE =  12
----------------------------------------------------------------------------
  >>>>>CLEAR MEMORY BANK # 1 <<<<<
============================================================================

****************************************************************************
  FLOW PROCESS FROM NODE    250.00 TO NODE    250.60 IS CODE =  31
----------------------------------------------------------------------------
  >>>>>COMPUTE PIPE-FLOW TRAVEL TIME THRU SUBAREA<<<<<
  >>>>>USING COMPUTER-ESTIMATED PIPESIZE (NON-PRESSURE FLOW)<<<<<
============================================================================
  ELEVATION DATA: UPSTREAM(FEET) =   684.21  DOWNSTREAM(FEET) =   684.01
  FLOW LENGTH(FEET) =    25.00   MANNING'S N =  0.013
  DEPTH OF FLOW IN  57.0 INCH PIPE IS  44.2 INCHES
  PIPE-FLOW VELOCITY(FEET/SEC.) =  12.37
  ESTIMATED PIPE DIAMETER(INCH) =  57.00    NUMBER OF PIPES =   1
  PIPE-FLOW(CFS) =     182.59
  PIPE TRAVEL TIME(MIN.) =   0.03    Tc(MIN.) =    8.92
  LONGEST FLOWPATH FROM NODE    216.00 TO NODE    250.60 =    3235.00 FEET.

****************************************************************************
  FLOW PROCESS FROM NODE    250.60 TO NODE    250.60 IS CODE =  11
----------------------------------------------------------------------------
  >>>>>CONFLUENCE MEMORY BANK # 2 WITH THE MAIN-STREAM MEMORY<<<<<
============================================================================

  ** MAIN STREAM CONFLUENCE DATA **
  STREAM     RUNOFF      Tc      INTENSITY     AREA
  NUMBER      (CFS)    (MIN.)   (INCH/HOUR)   (ACRE)
      1      182.59     8.92       5.804       62.66
```

```
  LONGEST FLOWPATH FROM NODE    216.00 TO NODE    250.60 =    3235.00 FEET.

  ** MEMORY BANK #  2 CONFLUENCE DATA **
  STREAM     RUNOFF      Tc      INTENSITY     AREA
  NUMBER      (CFS)    (MIN.)   (INCH/HOUR)   (ACRE)
      1        8.91     7.20       6.662        1.78
  LONGEST FLOWPATH FROM NODE    253.80 TO NODE    250.60 =     745.00 FEET.

  ** PEAK FLOW RATE TABLE **
  STREAM    RUNOFF       Tc      INTENSITY
  NUMBER     (CFS)     (MIN.)   (INCH/HOUR)
      1     156.38       7.20        6.662
      2     190.35       8.92        5.804

  COMPUTED CONFLUENCE ESTIMATES ARE AS FOLLOWS:
  PEAK FLOW RATE(CFS) =     190.35   Tc(MIN.) =    8.92
  TOTAL AREA(ACRES) =       64.4

****************************************************************************
  FLOW PROCESS FROM NODE    250.60 TO NODE    250.60 IS CODE =  12
----------------------------------------------------------------------------
  >>>>>CLEAR MEMORY BANK # 2 <<<<<
============================================================================

****************************************************************************
  FLOW PROCESS FROM NODE    250.60 TO NODE    250.70 IS CODE =  31
----------------------------------------------------------------------------
  >>>>>COMPUTE PIPE-FLOW TRAVEL TIME THRU SUBAREA<<<<<
  >>>>>USING COMPUTER-ESTIMATED PIPESIZE (NON-PRESSURE FLOW)<<<<<
============================================================================
  ELEVATION DATA: UPSTREAM(FEET) =   684.21  DOWNSTREAM(FEET) =   684.00
  FLOW LENGTH(FEET) =    15.00   MANNING'S N =  0.013
  DEPTH OF FLOW IN  54.0 INCH PIPE IS  38.7 INCHES
  PIPE-FLOW VELOCITY(FEET/SEC.) =  15.61
  ESTIMATED PIPE DIAMETER(INCH) =  54.00    NUMBER OF PIPES =   1
  PIPE-FLOW(CFS) =     190.35
  PIPE TRAVEL TIME(MIN.) =   0.02    Tc(MIN.) =    8.94
  LONGEST FLOWPATH FROM NODE    216.00 TO NODE    250.70 =    3250.00 FEET.

****************************************************************************
  FLOW PROCESS FROM NODE    250.70 TO NODE    257.00 IS CODE =  52
----------------------------------------------------------------------------
  >>>>>COMPUTE NATURAL VALLEY CHANNEL FLOW<<<<<
  >>>>>TRAVELTIME THRU SUBAREA<<<<<
============================================================================
  ELEVATION DATA: UPSTREAM(FEET) =    684.00  DOWNSTREAM(FEET) =    672.00
  CHANNEL LENGTH THRU SUBAREA(FEET) =   310.00   CHANNEL SLOPE =  0.0387
  CHANNEL FLOW THRU SUBAREA(CFS) =     190.35
  FLOW VELOCITY(FEET/SEC) =  11.36 (PER LACFCD/RCFC&WCD HYDROLOGY MANUAL)
  TRAVEL TIME(MIN.) =   0.45   Tc(MIN.) =    9.39
  LONGEST FLOWPATH FROM NODE    216.00 TO NODE    257.00 =    3560.00 FEET.

****************************************************************************
  FLOW PROCESS FROM NODE    257.00 TO NODE    257.00 IS CODE =   1
----------------------------------------------------------------------------
  >>>>>DESIGNATE INDEPENDENT STREAM FOR CONFLUENCE<<<<<
============================================================================
  TOTAL NUMBER OF STREAMS =  2
  CONFLUENCE VALUES USED FOR INDEPENDENT STREAM  1 ARE:
  TIME OF CONCENTRATION(MIN.) =    9.39
  RAINFALL INTENSITY(INCH/HR) =   5.61
  TOTAL STREAM AREA(ACRES) =    64.44
  PEAK FLOW RATE(CFS) AT CONFLUENCE =    190.35
```

```
****************************************************************************
  FLOW PROCESS FROM NODE    255.00 TO NODE    256.00 IS CODE =  21
----------------------------------------------------------------------------
  >>>>>RATIONAL METHOD INITIAL SUBAREA ANALYSIS<<<<<
============================================================================
  *USER SPECIFIED(SUBAREA):
  USER-SPECIFIED RUNOFF COEFFICIENT = .3500
  S.C.S. CURVE NUMBER (AMC II) =   0
  INITIAL SUBAREA FLOW-LENGTH(FEET) =   400.00
  UPSTREAM ELEVATION(FEET) =    790.00
  DOWNSTREAM ELEVATION(FEET) =    758.00
  ELEVATION DIFFERENCE(FEET) =     32.00
  SUBAREA OVERLAND TIME OF FLOW(MIN.) =    6.750
  WARNING: INITIAL SUBAREA FLOW PATH LENGTH IS GREATER THAN
           THE MAXIMUM OVERLAND FLOW LENGTH =   100.00
           (Reference: Table 3-1B of Hydrology Manual)
           THE MAXIMUM OVERLAND FLOW LENGTH IS USED IN Tc CALCULATION!
   100 YEAR RAINFALL INTENSITY(INCH/HOUR) =  6.947
  SUBAREA RUNOFF(CFS) =      3.94
  TOTAL AREA(ACRES) =      1.62   TOTAL RUNOFF(CFS) =      3.94

****************************************************************************
  FLOW PROCESS FROM NODE    256.00 TO NODE    257.00 IS CODE =  51
----------------------------------------------------------------------------
  >>>>>COMPUTE TRAPEZOIDAL CHANNEL FLOW<<<<<
  >>>>>TRAVELTIME THRU SUBAREA (EXISTING ELEMENT)<<<<<
============================================================================
  ELEVATION DATA: UPSTREAM(FEET) =    758.00  DOWNSTREAM(FEET) =    672.00
  CHANNEL LENGTH THRU SUBAREA(FEET) =   600.00   CHANNEL SLOPE =  0.1433
  CHANNEL BASE(FEET) =    3.00   "Z" FACTOR =   2.000
  MANNING'S FACTOR = 0.030   MAXIMUM DEPTH(FEET) =  10.00
   100 YEAR RAINFALL INTENSITY(INCH/HOUR) =  6.168
  *USER SPECIFIED(SUBAREA):
  USER-SPECIFIED RUNOFF COEFFICIENT = .3500
  S.C.S. CURVE NUMBER (AMC II) =   0
  TRAVEL TIME COMPUTED USING ESTIMATED FLOW(CFS) =       7.74
  TRAVEL TIME THRU SUBAREA BASED ON VELOCITY(FEET/SEC.) =   7.32
  AVERAGE FLOW DEPTH(FEET) =   0.29   TRAVEL TIME(MIN.) =   1.37
  Tc(MIN.) =    8.12
  SUBAREA AREA(ACRES) =     3.51       SUBAREA RUNOFF(CFS) =    7.58
  AREA-AVERAGE RUNOFF COEFFICIENT =  0.350
  TOTAL AREA(ACRES) =        5.1         PEAK FLOW RATE(CFS) =      11.07

  END OF SUBAREA CHANNEL FLOW HYDRAULICS:
  DEPTH(FEET) =  0.36   FLOW VELOCITY(FEET/SEC.) =   8.23
  LONGEST FLOWPATH FROM NODE    255.00 TO NODE    257.00 =    1000.00 FEET.

****************************************************************************
  FLOW PROCESS FROM NODE    257.00 TO NODE    257.00 IS CODE =   1
----------------------------------------------------------------------------
  >>>>>DESIGNATE INDEPENDENT STREAM FOR CONFLUENCE<<<<<
  >>>>>AND COMPUTE VARIOUS CONFLUENCED STREAM VALUES<<<<<
============================================================================
  TOTAL NUMBER OF STREAMS =  2
  CONFLUENCE VALUES USED FOR INDEPENDENT STREAM  2 ARE:
  TIME OF CONCENTRATION(MIN.) =    8.12
  RAINFALL INTENSITY(INCH/HR) =   6.17
  TOTAL STREAM AREA(ACRES) =     5.13
  PEAK FLOW RATE(CFS) AT CONFLUENCE =     11.07

  ** CONFLUENCE DATA **
  STREAM     RUNOFF       Tc      INTENSITY      AREA
```

```
  NUMBER      (CFS)     (MIN.)   (INCH/HOUR)    (ACRE)
      1      190.35     9.39        5.615         64.44
      2       11.07     8.12        6.168          5.13

  RAINFALL INTENSITY AND TIME OF CONCENTRATION RATIO
  CONFLUENCE FORMULA USED FOR  2 STREAMS.

  ** PEAK FLOW RATE TABLE **
  STREAM     RUNOFF      Tc      INTENSITY
  NUMBER      (CFS)    (MIN.)   (INCH/HOUR)
      1      175.62     8.12       6.168
      2      200.43     9.39       5.615

  COMPUTED CONFLUENCE ESTIMATES ARE AS FOLLOWS:
  PEAK FLOW RATE(CFS) =     200.43   Tc(MIN.) =    9.39
  TOTAL AREA(ACRES) =       69.6
  LONGEST FLOWPATH FROM NODE    216.00 TO NODE    257.00 =    3560.00 FEET.
============================================================================
  END OF STUDY SUMMARY:
  TOTAL AREA(ACRES)     =       69.6  TC(MIN.) =      9.39
  PEAK FLOW RATE(CFS)   =     200.43
============================================================================
============================================================================
  END OF RATIONAL METHOD ANALYSIS
```

BASIN B (CONTINUED FROM RUN 200)

FUSCOE ENGINEERING
6390 Greenwich Drive, Suite 170
San Diego, California 92122
tel 858.554.1500 ◦ fax 858.597.0335
www.fuscoe.com

Job Name: Valiano
Proposed Hydrology
100 Year Design Storm
Job #: 2690-007-02

Date:
August-13

Run Name:
P-2000.DAT

Node to Node		Code	Elev 1 (feet)	Elev 2 (feet)	Length (feet)	C Factor	Area (ac.)	Comments
2000	2001	2	748.3	746.3	100	0.71	0.14	
2001	2002	6	745.0	723.0	380.0	0.71	0.49	one side
2002	2006	3	717.0	716.8	5.0			
2006	2006	1						1 of 2
2003	2004	2	747.9	745.9	100.0	0.71	0.15	
2004	2005	6	745.0	723.0	280.0	0.71	0.54	one side
2005	2006	3	717.0	716.8	25.0			
2006	2006	1						2 of 2
2006	2013	3	716.8	713.5	260.0			
2013	2013	10						save to bank 1
2007	2008	2	726.0	722.0	75.0	0.71	0.3	
2008	2009	6	722.0	719.5	200.0	0.71	0.19	
2009	2009	1						1 of 2
2014	2015	2	740.0	731.0	130.0	0.71	0.13	
2015	2009	6	731.0	719.5	250.0	0.71	0.22	one side
2009	2009	1						2 of 2
2009	2013	3	713.4	713.3	3.0			
2013	2013	10						save to bank 2
2010	2011	2	726.0	722.0	75.0	0.71	0.04	
2011	2012	6	722.0	719.5	200.0	0.71	0.23	one side
2012	2012	1						1 of 2
2016	2017	2	740.0	731.0	160.0	0.71	0.09	
2017	2012	6	731.0	719.5	275.0	0.71	0.14	one side
2012	2012	1						2 of 2
2012	2013	3	713.5	713.3	20.0			
2013	2013	11						add bank 1
2013	2013	11						add bank 2
2013	2013	12						clear bank 1
2013	2013	12						clear bank 2

FUSCOE
ENGINEERING
6390 Greenwich Drive, Suite 170
San Diego, California 92122
tel 858.554.1500 ∘ fax 858.597.0335
www.fuscoe.com

Job Name: Valiano
Proposed Hydrology
100 Year Design Storm
Job #: 2690-007-02

Date:
August-13

Run Name:
P-2000.DAT

Node to Node		Code	Elev 1 (feet)	Elev 2 (feet)	Length (feet)	C Factor	Area (ac.)	Comments
2013	2019	3	713.3	712.5	85.0			
2019	2025	3	712.5	702.3	390.0			
2025	2025	1						1 of 2
2020	2021	2	721	718	90	0.71	0.06	
2021	2022.5	6	718	708.5	275	0.71	0.54	one side
2022.5	2025	3	702.5	702.25	25			
2025	2025	1						2 of 2
2025	2027	3	702.25	698	315			
2027	2027	1						1 of 2
2023	2024	2	721	715.5	130	0.71	0.2	
2024	2026	6	715.5	704	600	0.71	3.0	
2026	2027	3	698.25	698	25			
2027	2027	1						2 of 2
2027	2028	3	698	695.55	245			
2028	2029	3	695.55	690	140			
2029	2030	3	690	686	40			
2030	2041	5	686	660	340			
2041	2041	10						save to bank 1
2031	2032	2	742	740	100	0.41	0.18	
2032	2039	5	740	690	760	0.41	2.64	
2039	2039	10						save to bank 2
2034	2035	2	745	744.5	50	0.41	0.1	
2035	2038	5	744.5	706	490	0.41	1.11	
2038	2038	1						1 of 2
2036	2037	2	760	754	60	0.41	0.1	
2037	2038	5	754	706	360	0.41	1.99	
2038	2038	1						2 of 2
2038	2039	5	706	690	230	0.41	1.99	
2039	2039	11						add bank 2
2039	2039	12						clear bank 2

FUSCOE
ENGINEERING
6390 Greenwich Drive, Suite 170
San Diego, California 92122
tel 858.554.1500 ◦ fax 858.597.0335
www.fuscoe.com

Job Name: Valiano
Proposed Hydrology
100 Year Design Storm
Job #: 2690-007-02

Date:
August-13

Run Name:
P-2000.DAT

Node to Node		Code	Elev 1 (feet)	Elev 2 (feet)	Length (feet)	C Factor	Area (ac.)	Comments
2039	2040	5	690	680	205	0.41	1.74	
2040	2041	5	680	660	310	0.41	2.51	
2041	2041	11						add bank 1
2041	2041	12						clear bank 1
2041	2042	5	660	649	215	0.41	0.86	
2042	2047	5	649	640	200			
2047	2047	1						1 of 2
2043	2044	2	696	686	130	0.71	0.17	
2044	2045	5	686	672	370	0.71	0.94	
2045	2046	5	672	649	425	0.71	2.19	
2046	2047	5	649	640	310	0.41	0.88	
2047	2047	1						2 of 2
2047	2058	5	640	634	125			
2058	2058	1						1 of 4
2048	2049	2	748	742	90	0.41	0.11	
2049	2050	5	742	694	380	0.41	0.92	
2050	2058	5	694	634	860	0.41	1.3	
2058	2058	1						2 of 4
2051	2052	2	638	637.5	70	0.41	0.1	
2052	2053	5	637.5	637.1	40	0.41	2.23	
2053	2058	5	637.1	634	250	0.41	3.23	
2058	2058	1						3 of 4
2054	2055	2	760	750	100	0.41	0.1	
2055	2056	5	750	684	500	0.41	1.44	
2056	2057	5	684	670	280	0.41	2.77	
2057	2058	5	670	634	760	0.41	2.25	
2058	2058	1						4 of 4
2058	2076	5	634	630	260	0.41	0.33	
2076	2076	10						Save to Bank 1
257	257	7	Q = 200.43 cfs A = 69.6 ac Tc = 9.39 min					FROM RUN 200

FUSCOE
ENGINEERING
6390 Greenwich Drive, Suite 170
San Diego, California 92122
tel 858.554.1500 ◦ fax 858.597.0335
www.fuscoe.com

Job Name: Valiano
Proposed Hydrology
100 Year Design Storm
Job #: 2690-007-02

Date:
August-13

Run Name:
P-2000.DAT

Node to Node		Code	Elev 1 (feet)	Elev 2 (feet)	Length (feet)	C Factor	Area (ac.)	Comments
257	2062	5	672	654	200			
2062	2062	1						1 of 2
2060	2061	2	724	700	100	0.35	0.1	
2061	2062	5	700	654	400	0.35	1.67	
2062	2062	1						2 of 2
2062	2071	5	654	651	225	0.35	0.43	
2071	2071	1						1 of 3
2063	2064	2	762	752	100	0.35	0.1	
2064	2065	5	752	732	200	0.35	0.8	
2065	2066	5	732	702	300	0.35	2.85	
2066	2067	5	702	672	300	0.35	2.61	
2067	2071	5	672	651	240	0.35	0.85	
2071	2071	1						2 of 3
2068	2069	2	740	732	100	0.35	0.1	
2069	2070	5	732	654	650	0.35	2.18	
2070	2071	5	654	651	100			
2071	2071	1						3 of 3
2071	2076	5	651	630	590			
2076	2076	1						1 of 3
2072	2073	2	664	654	100	0.35	0.26	
2073	2074	5	654	638	260	0.35	0.95	
2074	2076	5	638	630	355	0.35	2.39	
2076	2076	1						2 of 3
2075	2075	7	Q = 5.4 cfs A = 3.43 Tc = 10min					
2075	2076	5	660	630	720	0.35	1.53	
2076	2076	1						3 of 3
2076	2076	11						Add Bank 1
2076	2076	12						Clear Bank 1
2076	2077	5	630	629	125	0.35	0.93	
2077	2077	10						

FUSCOE
ENGINEERING
6390 Greenwich Drive, Suite 170
San Diego, California 92122
tel 858.554.1500 ◦ fax 858.597.0335
www.fuscoe.com

Job Name: Valiano
Proposed Hydrology
100 Year Design Storm
Job #: 2690-007-02

Date:
August-13

Run Name:
P-2000.DAT

Node to Node		Code	Elev 1 (feet)	Elev 2 (feet)	Length (feet)	C Factor	Area (ac.)	Comments
2079	2080	2	646	644	100	0.71	0.31	
2080	2081	6	643.5	641	360	0.71	2.08	one side
2081	2082	3	635	632.4	40			
2082	2082	1						1 of 2
2081.1	2081.2	2	646	644	100	0.71	0.32	
2081.2	2082	6	644	641	260	0.71	1.29	one side
2082	2082	1						2 of 2
2082	2083	3	632.4	632	40			
2083	2083	1						1 of 2
2082.1	2082.2	2	640	638	100	0.71	0.17	
2082.2	2082.3	6	638	637	100	0.71	0.3	two sides
2082.3	2083	3	632.3	632	30			
2083	2083	1						2 of 2
2083	2076.5	3	632	631	25			
2076.5	2077	5	631	629	100			
2077	2077	11						add bank 1
2077	2077	12						clear bank 1
2077	2078	3	629	627.5	115			
2078	2102	5	627.5	626	275	0.35	1.31	
2102	2102	10						Save to Bank 1
2088	2089	2	698.4	696.4	100	0.71	0.18	
2089	2093	6	695	670	375	0.71	1.17	one side
2093	2093	1						1 of 2

2090	2091	2	695	692	90	0.71	0.08	
2091	2092	6	692	670	250	0.71	0.67	one side
2092	2093	3	663.3	663	30			
2093	2093	1						
								2 of 2
2093	2097	3	663	632	570			
2097	2097	1						1 of 2
2095	2096	2	669.7	667.7	100	0.71	0.13	

FUSCOE
ENGINEERING
6390 Greenwich Drive, Suite 170
San Diego, California 92122
tel 858.554.1500 ◦ fax 858.597.0335
www.fuscoe.com

Job Name: Valiano
Proposed Hydrology
100 Year Design Storm
Job #: 2690-007-02

Date:
August-13

Run Name:
P-2000.DAT

Node to Node		Code	Elev 1 (feet)	Elev 2 (feet)	Length (feet)	C Factor	Area (ac.)	Comments
2096	2097	6	666	638	520	0.71	1.67	one side
2097	2097	1						2 of 2
2097	2098	3	636	635.7	30			
2098	2098	1						1 of 2
2094.5	2094	2	672.8	670.8	100	0.71	0.11	
2094	2098	6	668	638	475	0.71	1.25	one side
2098	2098	1						2 of 2
2098	2100	3	635.7	635	65			
2100	2100	1						1 of 2
2084	2085	2	695.6	693.6	100	0.71	0.16	
2085	2086	6	693.6	683	300	0.71	2.55	two sides
2086	2087	3	677	676	100			
2087	2100	3	676	635	175			
2100	2100	1						2 of 2
2100	2101	5	635	634.5	50	0.35	2.26	
2100	2101	3	635	634.5	35			
2101	2102	5	631	626	240			
2102	2102	1						1 of 2
2103	2103	7	Q = 16.2 cfs A = 14.53 ac Tc = 10 min					
2103	2102.5	3	638.8	627	425			
2102.5	2102	5	627	626	120			
2102	2102	1						2 of 2
2102	2102	11						Add Bank 1
2102	2102	12						Clear Bank 1
2102	2104	5	626	618.5	600	0.71	4.85	
2104	2104	1						1 of 3
2103.5	2103.5	7	Q = 24.9 cfs A = 26.68 ac Tc = 10 min					
2103.5	2104	3	628.81	618.5	325			
2104	2104	1						2 of 3

FUSCOE
ENGINEERING
6390 Greenwich Drive, Suite 170
San Diego, California 92122
tel 858.554.1500 ◦ fax 858.597.0335
www.fuscoe.com

Job Name: Valiano
Proposed Hydrology
100 Year Design Storm
Job #: 2690-007-02

Date:
August-13

Run Name:
P-2000.DAT

Node to Node		Code	Elev 1 (feet)	Elev 2 (feet)	Length (feet)	C Factor	Area (ac.)	Comments
2103.1	2103.2	2	644	642	100	0.71	0.19	
2103.2	2103.3	6	641	634	220	0.71	1.64	
2103.3	2135	5	634	626	680	0.71	2.73	
2135	2104	3	618.3	617	165			
2104	2104	1						3 OF 3
2104	2131	5	618.5	612	210			
2131	2131	10						Save to Bank 1
2108	2109	2	698.4	696.4	100	0.71	0.16	
2109	2110	6	695	667	390	0.71	0.54	one side
2110	2110	1						1 of 2
2105	2106	2	695	689	125	0.71	0.08	
2106	2107	6	689	667	260	0.71	0.17	one side
2107	2110	3	661	660.7	30			
2110	2110	1						2 of 2
2110	2116	3	660.7	622.5	600			
2116	2116	1						1 of 3
2111	2112	2	665	663	100	0.71	0.07	
2112	2113	6	663	625.5	700	0.71	2.18	
2113	2116	3	622.8	622.5	30			
2116	2116	1						2 of 3
2114	2115	2	662	654	85	0.71	0.05	
2115	2116	6	654	625.5	485	0.71	1.84	
2116	2116							3 of 3
2116	2117	3	622.5	621	40			
2117	2117	1						1 of 2
2117.1	2117	2	622	621	100	0.35	0.25	
2117	2117	1						2 of 2
2117	2131	3	621	612	50			
2131	2131	10						save to bank 2

FUSCOE
ENGINEERING
6390 Greenwich Drive, Suite 170
San Diego, California 92122
tel 858.554.1500 ◦ fax 858.597.0335
www.fuscoe.com

Job Name: Valiano
Proposed Hydrology
100 Year Design Storm
Job #: 2690-007-02

Date:
August-13

Run Name:
P-2000.DAT

Node to Node		Code	Elev 1 (feet)	Elev 2 (feet)	Length (feet)	C Factor	Area (ac.)	Comments
2120	2121	2	740	730	100	0.35	0.10	
2121	2125	5	730	668	540	0.35	1.79	
2125	2125	1						1 of 2
2123	2124	2	730	724	100	0.35	0.11	
2124	2125	5	724	668	500	0.35	1.29	
2125	2125	1						2 of 2
2125	2126	3	662	654	120			
2126	2129	5	654	642	120			
2129	2129	1						1 of 2
2127	2128	2	676	661	120	0.35	0.24	
2128	2129	5	661	642	160	0.35	0.89	
2129	2129	1						2 of 2
2129	2131	5	642	612	550	0.35	4.57	
2131	2131	11						Add Bank 1
2131	2131	11						Add Bank 2
2131	2131	12						Clear Bank 1
2131	2131	12						Clear Bank 2
2131	2132	3	612	611.5	90			
2132	2200	5	611.5	608	370			
2200	2200	1						1 OF 2
2132.1	2132.2	2	696	695	100	0.41	0.11	
2132.2	2132.3	5	695	664	375	0.41	1.39	
2132.3	2200	5	664	608	800	0.41	5.86	
2200	2200	1						2 OF 2

```
****************************************************************************

            RATIONAL METHOD HYDROLOGY COMPUTER PROGRAM PACKAGE
            Reference: SAN DIEGO COUNTY FLOOD CONTROL DISTRICT
                         2003,1985,1981 HYDROLOGY MANUAL
         (c) Copyright 1982-2012 Advanced Engineering Software (aes)
             Ver. 19.0 Release Date: 06/01/2012  License ID 1355

                           Analysis prepared by:

                             Fuscoe Engineering
                             6390 Greenwich Dr.
                                 Suite 170
                            San Diego, CA 92122

 ************************** DESCRIPTION OF STUDY **************************
* VALIANO                                                                  *
* PROPOSED HYDROLOGY - 2000 SERIES                                         *
* OCTOBER 20, 2014                                                         *
 ***************************************************************************

  FILE NAME: P-2000.DAT
  TIME/DATE OF STUDY: 08:56 10/22/2014
----------------------------------------------------------------------------
  USER SPECIFIED HYDROLOGY AND HYDRAULIC MODEL INFORMATION:
----------------------------------------------------------------------------
  2003 SAN DIEGO MANUAL CRITERIA

  USER SPECIFIED STORM EVENT(YEAR) = 100.00
  6-HOUR DURATION PRECIPITATION (INCHES) =   3.200
  SPECIFIED MINIMUM PIPE SIZE(INCH) =  12.00
  SPECIFIED PERCENT OF GRADIENTS(DECIMAL) TO USE FOR FRICTION SLOPE = 0.90
  SAN DIEGO HYDROLOGY MANUAL "C"-VALUES USED FOR RATIONAL METHOD
  NOTE: USE MODIFIED RATIONAL METHOD PROCEDURES FOR CONFLUENCE ANALYSIS
  *USER-DEFINED STREET-SECTIONS FOR COUPLED PIPEFLOW AND STREETFLOW MODEL*
     HALF-  CROWN TO   STREET-CROSSFALL:   CURB  GUTTER-GEOMETRIES:  MANNING
     WIDTH  CROSSFALL  IN-  / OUT-/PARK-  HEIGHT  WIDTH  LIP   HIKE  FACTOR
NO.   (FT)     (FT)    SIDE / SIDE/ WAY    (FT)    (FT)  (FT)  (FT)    (n)
===  =====  =========  =================  ======  ===== ====== ===== =======
  1   16.0      8.0    0.020/0.020/0.020   0.33    0.10 0.0100 0.010 0.0150

  GLOBAL STREET FLOW-DEPTH CONSTRAINTS:
    1. Relative Flow-Depth =  0.33 FEET
       as (Maximum Allowable Street Flow Depth) - (Top-of-Curb)
    2. (Depth)*(Velocity) Constraint =  6.0 (FT*FT/S)
  *SIZE PIPE WITH A FLOW CAPACITY GREATER THAN
   OR EQUAL TO THE UPSTREAM TRIBUTARY PIPE.*

****************************************************************************
  FLOW PROCESS FROM NODE   2001.00 TO NODE   2001.00 IS CODE =  21
----------------------------------------------------------------------------
  >>>>>RATIONAL METHOD INITIAL SUBAREA ANALYSIS<<<<<
============================================================================
  *USER SPECIFIED(SUBAREA):
  USER-SPECIFIED RUNOFF COEFFICIENT = .7100
  S.C.S. CURVE NUMBER (AMC II) =   0
  INITIAL SUBAREA FLOW-LENGTH(FEET) =   100.00
  UPSTREAM ELEVATION(FEET) =    748.30
  DOWNSTREAM ELEVATION(FEET) =    746.30
  ELEVATION DIFFERENCE(FEET) =      2.00
  SUBAREA OVERLAND TIME OF FLOW(MIN.) =    4.984
  WARNING: INITIAL SUBAREA FLOW PATH LENGTH IS GREATER THAN
```

```
          THE MAXIMUM OVERLAND FLOW LENGTH =    80.00
          (Reference: Table 3-1B of Hydrology Manual)
          THE MAXIMUM OVERLAND FLOW LENGTH IS USED IN Tc CALCULATION!
   100 YEAR RAINFALL INTENSITY(INCH/HOUR) =  8.431
  NOTE: RAINFALL INTENSITY IS BASED ON Tc = 5-MINUTE.
  SUBAREA RUNOFF(CFS) =      0.84
  TOTAL AREA(ACRES) =      0.14   TOTAL RUNOFF(CFS) =      0.84

****************************************************************************
  FLOW PROCESS FROM NODE   2001.00 TO NODE   2002.00 IS CODE =  62
----------------------------------------------------------------------------
  >>>>>COMPUTE STREET FLOW TRAVEL TIME THRU SUBAREA<<<<<
  >>>>>(STREET TABLE SECTION #  1 USED)<<<<<
============================================================================
  UPSTREAM ELEVATION(FEET) =  745.00  DOWNSTREAM ELEVATION(FEET) =  723.00
  STREET LENGTH(FEET) =   380.00   CURB HEIGHT(INCHES) =  4.0
  STREET HALFWIDTH(FEET) = 16.00

  DISTANCE FROM CROWN TO CROSSFALL GRADEBREAK(FEET) =   8.00
  INSIDE STREET CROSSFALL(DECIMAL) =  0.020
  OUTSIDE STREET CROSSFALL(DECIMAL)  =  0.020

  SPECIFIED NUMBER OF HALFSTREETS CARRYING RUNOFF =  1
  STREET PARKWAY CROSSFALL(DECIMAL)  =  0.020
  Manning's FRICTION FACTOR for Streetflow Section(curb-to-curb) =   0.0150
  Manning's FRICTION FACTOR for Back-of-Walk Flow Section =   0.0150

    **TRAVEL TIME COMPUTED USING ESTIMATED FLOW(CFS) =       2.08
    STREETFLOW MODEL RESULTS USING ESTIMATED FLOW:
    STREET FLOW DEPTH(FEET) =  0.16
    HALFSTREET FLOOD WIDTH(FEET) =    7.17
    AVERAGE FLOW VELOCITY(FEET/SEC.) =    4.03
    PRODUCT OF DEPTH&VELOCITY(FT*FT/SEC.) =    0.65
  STREET FLOW TRAVEL TIME(MIN.) =   1.57   Tc(MIN.) =    6.55
   100 YEAR RAINFALL INTENSITY(INCH/HOUR) =  7.080
  *USER SPECIFIED(SUBAREA):
  USER-SPECIFIED RUNOFF COEFFICIENT = .7100
  S.C.S. CURVE NUMBER (AMC II) =   0
  AREA-AVERAGE RUNOFF COEFFICIENT =  0.710
  SUBAREA AREA(ACRES) =    0.49      SUBAREA RUNOFF(CFS) =    2.46
  TOTAL AREA(ACRES) =        0.6        PEAK FLOW RATE(CFS) =       3.17

  END OF SUBAREA STREET FLOW HYDRAULICS:
  DEPTH(FEET) = 0.19   HALFSTREET FLOOD WIDTH(FEET) =   8.41
  FLOW VELOCITY(FEET/SEC.) =  4.47   DEPTH*VELOCITY(FT*FT/SEC.) =   0.83
  LONGEST FLOWPATH FROM NODE   2001.00 TO NODE   2002.00 =     480.00 FEET.

****************************************************************************
  FLOW PROCESS FROM NODE   2002.00 TO NODE   2006.00 IS CODE =  31
----------------------------------------------------------------------------
  >>>>>COMPUTE PIPE-FLOW TRAVEL TIME THRU SUBAREA<<<<<
  >>>>>USING COMPUTER-ESTIMATED PIPESIZE (NON-PRESSURE FLOW)<<<<<
============================================================================
  ELEVATION DATA: UPSTREAM(FEET) =   717.00  DOWNSTREAM(FEET) =   716.75
  FLOW LENGTH(FEET) =     5.00   MANNING'S N =  0.013
  ESTIMATED PIPE DIAMETER(INCH) INCREASED TO 12.000
  DEPTH OF FLOW IN  12.0 INCH PIPE IS   5.4 INCHES
  PIPE-FLOW VELOCITY(FEET/SEC.) =   9.20
  ESTIMATED PIPE DIAMETER(INCH) =  12.00    NUMBER OF PIPES =   1
  PIPE-FLOW(CFS) =       3.17
  PIPE TRAVEL TIME(MIN.) =   0.01    Tc(MIN.) =    6.56
  LONGEST FLOWPATH FROM NODE   2001.00 TO NODE   2006.00 =     485.00 FEET.
```

```
****************************************************************************
  FLOW PROCESS FROM NODE   2006.00 TO NODE   2006.00 IS CODE =   1
----------------------------------------------------------------------------
  >>>>>DESIGNATE INDEPENDENT STREAM FOR CONFLUENCE<<<<<
============================================================================
  TOTAL NUMBER OF STREAMS =  2
  CONFLUENCE VALUES USED FOR INDEPENDENT STREAM  1 ARE:
  TIME OF CONCENTRATION(MIN.) =    6.56
  RAINFALL INTENSITY(INCH/HR) =   7.07
  TOTAL STREAM AREA(ACRES) =     0.63
  PEAK FLOW RATE(CFS) AT CONFLUENCE =      3.17

****************************************************************************
  FLOW PROCESS FROM NODE   2003.00 TO NODE   2004.00 IS CODE =  21
----------------------------------------------------------------------------
  >>>>>RATIONAL METHOD INITIAL SUBAREA ANALYSIS<<<<<
============================================================================
  *USER SPECIFIED(SUBAREA):
  USER-SPECIFIED RUNOFF COEFFICIENT = .7100
  S.C.S. CURVE NUMBER (AMC II) =   0
  INITIAL SUBAREA FLOW-LENGTH(FEET) =   100.00
  UPSTREAM ELEVATION(FEET) =    747.90
  DOWNSTREAM ELEVATION(FEET) =    745.90
  ELEVATION DIFFERENCE(FEET) =      2.00
  SUBAREA OVERLAND TIME OF FLOW(MIN.) =    4.984
  WARNING: INITIAL SUBAREA FLOW PATH LENGTH IS GREATER THAN
           THE MAXIMUM OVERLAND FLOW LENGTH =    80.00
           (Reference: Table 3-1B of Hydrology Manual)
           THE MAXIMUM OVERLAND FLOW LENGTH IS USED IN Tc CALCULATION!
   100 YEAR RAINFALL INTENSITY(INCH/HOUR) =  8.431
  NOTE: RAINFALL INTENSITY IS BASED ON Tc = 5-MINUTE.
  SUBAREA RUNOFF(CFS) =      0.90
  TOTAL AREA(ACRES) =      0.15   TOTAL RUNOFF(CFS) =      0.90

****************************************************************************
  FLOW PROCESS FROM NODE   2004.00 TO NODE   2005.00 IS CODE =  62
----------------------------------------------------------------------------
  >>>>>COMPUTE STREET FLOW TRAVEL TIME THRU SUBAREA<<<<<
  >>>>>(STREET TABLE SECTION #  1 USED)<<<<<
============================================================================
  UPSTREAM ELEVATION(FEET) =  745.00  DOWNSTREAM ELEVATION(FEET) =  723.00
  STREET LENGTH(FEET) =   280.00   CURB HEIGHT(INCHES) =  4.0
  STREET HALFWIDTH(FEET) = 16.00

  DISTANCE FROM CROWN TO CROSSFALL GRADEBREAK(FEET) =   8.00
  INSIDE STREET CROSSFALL(DECIMAL) =  0.020
  OUTSIDE STREET CROSSFALL(DECIMAL)  =  0.020

  SPECIFIED NUMBER OF HALFSTREETS CARRYING RUNOFF =  1
  STREET PARKWAY CROSSFALL(DECIMAL)  =  0.020
  Manning's FRICTION FACTOR for Streetflow Section(curb-to-curb) =   0.0150
  Manning's FRICTION FACTOR for Back-of-Walk Flow Section =   0.0150

    **TRAVEL TIME COMPUTED USING ESTIMATED FLOW(CFS) =       2.34
    STREETFLOW MODEL RESULTS USING ESTIMATED FLOW:
    STREET FLOW DEPTH(FEET) =  0.16
    HALFSTREET FLOOD WIDTH(FEET) =    7.04
    AVERAGE FLOW VELOCITY(FEET/SEC.) =    4.71
    PRODUCT OF DEPTH&VELOCITY(FT*FT/SEC.) =    0.75
  STREET FLOW TRAVEL TIME(MIN.) =   0.99   Tc(MIN.) =    5.98
   100 YEAR RAINFALL INTENSITY(INCH/HOUR) =  7.516
  *USER SPECIFIED(SUBAREA):
  USER-SPECIFIED RUNOFF COEFFICIENT = .7100
```

```
  S.C.S. CURVE NUMBER (AMC II) =   0
  AREA-AVERAGE RUNOFF COEFFICIENT =  0.710
  SUBAREA AREA(ACRES) =    0.54      SUBAREA RUNOFF(CFS) =    2.88
  TOTAL AREA(ACRES) =        0.7        PEAK FLOW RATE(CFS) =       3.68

  END OF SUBAREA STREET FLOW HYDRAULICS:
  DEPTH(FEET) = 0.18   HALFSTREET FLOOD WIDTH(FEET) =   8.34
  FLOW VELOCITY(FEET/SEC.) =  5.28   DEPTH*VELOCITY(FT*FT/SEC.) =   0.98
  LONGEST FLOWPATH FROM NODE   2003.00 TO NODE   2005.00 =     380.00 FEET.

****************************************************************************
  FLOW PROCESS FROM NODE   2005.00 TO NODE   2006.00 IS CODE =  31
----------------------------------------------------------------------------
  >>>>>COMPUTE PIPE-FLOW TRAVEL TIME THRU SUBAREA<<<<<
  >>>>>USING COMPUTER-ESTIMATED PIPESIZE (NON-PRESSURE FLOW)<<<<<
============================================================================
  ELEVATION DATA: UPSTREAM(FEET) =   717.00  DOWNSTREAM(FEET) =   716.75
  FLOW LENGTH(FEET) =    25.00   MANNING'S N =  0.013
  DEPTH OF FLOW IN  15.0 INCH PIPE IS   8.4 INCHES
  PIPE-FLOW VELOCITY(FEET/SEC.) =   5.22
  ESTIMATED PIPE DIAMETER(INCH) =  15.00    NUMBER OF PIPES =   1
  PIPE-FLOW(CFS) =       3.68
  PIPE TRAVEL TIME(MIN.) =   0.08    Tc(MIN.) =    6.05
  LONGEST FLOWPATH FROM NODE   2003.00 TO NODE   2006.00 =     405.00 FEET.

****************************************************************************
  FLOW PROCESS FROM NODE   2006.00 TO NODE   2006.00 IS CODE =   1
----------------------------------------------------------------------------
  >>>>>DESIGNATE INDEPENDENT STREAM FOR CONFLUENCE<<<<<
  >>>>>AND COMPUTE VARIOUS CONFLUENCED STREAM VALUES<<<<<
============================================================================
  TOTAL NUMBER OF STREAMS =  2
  CONFLUENCE VALUES USED FOR INDEPENDENT STREAM  2 ARE:
  TIME OF CONCENTRATION(MIN.) =    6.05
  RAINFALL INTENSITY(INCH/HR) =   7.45
  TOTAL STREAM AREA(ACRES) =     0.69
  PEAK FLOW RATE(CFS) AT CONFLUENCE =      3.68

  ** CONFLUENCE DATA **
  STREAM     RUNOFF       Tc      INTENSITY      AREA
  NUMBER      (CFS)     (MIN.)   (INCH/HOUR)    (ACRE)
      1        3.17     6.56        7.074          0.63
      2        3.68     6.05        7.452          0.69

  RAINFALL INTENSITY AND TIME OF CONCENTRATION RATIO
  CONFLUENCE FORMULA USED FOR  2 STREAMS.

  ** PEAK FLOW RATE TABLE **
  STREAM     RUNOFF      Tc      INTENSITY
  NUMBER      (CFS)    (MIN.)   (INCH/HOUR)
      1        6.60     6.05       7.452
      2        6.66     6.56       7.074

  COMPUTED CONFLUENCE ESTIMATES ARE AS FOLLOWS:
  PEAK FLOW RATE(CFS) =       6.66   Tc(MIN.) =    6.56
  TOTAL AREA(ACRES) =        1.3
  LONGEST FLOWPATH FROM NODE   2001.00 TO NODE   2006.00 =     485.00 FEET.

****************************************************************************
  FLOW PROCESS FROM NODE   2006.00 TO NODE   2013.00 IS CODE =  31
----------------------------------------------------------------------------
  >>>>>COMPUTE PIPE-FLOW TRAVEL TIME THRU SUBAREA<<<<<
  >>>>>USING COMPUTER-ESTIMATED PIPESIZE (NON-PRESSURE FLOW)<<<<<
```

```
==============================================================================
  ELEVATION DATA: UPSTREAM(FEET) =   716.75  DOWNSTREAM(FEET) =   713.50
  FLOW LENGTH(FEET) =   260.00   MANNING'S N =  0.013
  DEPTH OF FLOW IN  15.0 INCH PIPE IS  11.9 INCHES
  PIPE-FLOW VELOCITY(FEET/SEC.) =   6.37
  ESTIMATED PIPE DIAMETER(INCH) =  15.00    NUMBER OF PIPES =   1
  PIPE-FLOW(CFS) =       6.66
  PIPE TRAVEL TIME(MIN.) =   0.68    Tc(MIN.) =    7.24
  LONGEST FLOWPATH FROM NODE   2001.00 TO NODE   2013.00 =     745.00 FEET.

****************************************************************************
  FLOW PROCESS FROM NODE   2013.00 TO NODE   2013.00 IS CODE =  10
----------------------------------------------------------------------------
  >>>>>MAIN-STREAM MEMORY COPIED ONTO MEMORY BANK # 1 <<<<<
==============================================================================

****************************************************************************
  FLOW PROCESS FROM NODE   2007.00 TO NODE   2008.00 IS CODE =  21
----------------------------------------------------------------------------
  >>>>>RATIONAL METHOD INITIAL SUBAREA ANALYSIS<<<<<
==============================================================================
  *USER SPECIFIED(SUBAREA):
  USER-SPECIFIED RUNOFF COEFFICIENT = .7100
  S.C.S. CURVE NUMBER (AMC II) =   0
  INITIAL SUBAREA FLOW-LENGTH(FEET) =    75.00
  UPSTREAM ELEVATION(FEET) =    726.00
  DOWNSTREAM ELEVATION(FEET) =    722.00
  ELEVATION DIFFERENCE(FEET) =      4.00
  SUBAREA OVERLAND TIME OF FLOW(MIN.) =    3.480
   100 YEAR RAINFALL INTENSITY(INCH/HOUR) =  8.431
  NOTE: RAINFALL INTENSITY IS BASED ON Tc = 5-MINUTE.
  SUBAREA RUNOFF(CFS) =      1.80
  TOTAL AREA(ACRES) =      0.30   TOTAL RUNOFF(CFS) =      1.80

****************************************************************************
  FLOW PROCESS FROM NODE   2008.00 TO NODE   2009.00 IS CODE =  62
----------------------------------------------------------------------------
  >>>>>COMPUTE STREET FLOW TRAVEL TIME THRU SUBAREA<<<<<
  >>>>>(STREET TABLE SECTION #  1 USED)<<<<<
==============================================================================
  UPSTREAM ELEVATION(FEET) =  722.00  DOWNSTREAM ELEVATION(FEET) =  719.50
  STREET LENGTH(FEET) =   200.00   CURB HEIGHT(INCHES) =  4.0
  STREET HALFWIDTH(FEET) = 16.00

  DISTANCE FROM CROWN TO CROSSFALL GRADEBREAK(FEET) =   8.00
  INSIDE STREET CROSSFALL(DECIMAL) =  0.020
  OUTSIDE STREET CROSSFALL(DECIMAL)  =  0.020

  SPECIFIED NUMBER OF HALFSTREETS CARRYING RUNOFF =  1
  STREET PARKWAY CROSSFALL(DECIMAL)  =  0.020
  Manning's FRICTION FACTOR for Streetflow Section(curb-to-curb) =   0.0150
  Manning's FRICTION FACTOR for Back-of-Walk Flow Section =   0.0150

    **TRAVEL TIME COMPUTED USING ESTIMATED FLOW(CFS) =       2.36
    STREETFLOW MODEL RESULTS USING ESTIMATED FLOW:
    STREET FLOW DEPTH(FEET) =  0.22
    HALFSTREET FLOOD WIDTH(FEET) =   10.03
    AVERAGE FLOW VELOCITY(FEET/SEC.) =    2.35
    PRODUCT OF DEPTH&VELOCITY(FT*FT/SEC.) =    0.51
  STREET FLOW TRAVEL TIME(MIN.) =   1.42   Tc(MIN.) =    4.90
   100 YEAR RAINFALL INTENSITY(INCH/HOUR) =  8.431
  NOTE: RAINFALL INTENSITY IS BASED ON Tc = 5-MINUTE.
  *USER SPECIFIED(SUBAREA):
```

```
  USER-SPECIFIED RUNOFF COEFFICIENT = .7100
  S.C.S. CURVE NUMBER (AMC II) =   0
  AREA-AVERAGE RUNOFF COEFFICIENT =  0.710
  SUBAREA AREA(ACRES) =    0.19      SUBAREA RUNOFF(CFS) =    1.14
  TOTAL AREA(ACRES) =        0.5        PEAK FLOW RATE(CFS) =       2.93

  END OF SUBAREA STREET FLOW HYDRAULICS:
  DEPTH(FEET) = 0.23   HALFSTREET FLOOD WIDTH(FEET) =  10.84
  FLOW VELOCITY(FEET/SEC.) =  2.49   DEPTH*VELOCITY(FT*FT/SEC.) =   0.59
  LONGEST FLOWPATH FROM NODE   2007.00 TO NODE   2009.00 =     275.00 FEET.

****************************************************************************
  FLOW PROCESS FROM NODE   2009.00 TO NODE   2009.00 IS CODE =   1
----------------------------------------------------------------------------
  >>>>>DESIGNATE INDEPENDENT STREAM FOR CONFLUENCE<<<<<
============================================================================
  TOTAL NUMBER OF STREAMS =  2
  CONFLUENCE VALUES USED FOR INDEPENDENT STREAM  1 ARE:
  TIME OF CONCENTRATION(MIN.) =    4.90
  RAINFALL INTENSITY(INCH/HR) =   8.43
  TOTAL STREAM AREA(ACRES) =     0.49
  PEAK FLOW RATE(CFS) AT CONFLUENCE =      2.93

****************************************************************************
  FLOW PROCESS FROM NODE   2014.00 TO NODE   2015.00 IS CODE =  21
----------------------------------------------------------------------------
  >>>>>RATIONAL METHOD INITIAL SUBAREA ANALYSIS<<<<<
============================================================================
  *USER SPECIFIED(SUBAREA):
  USER-SPECIFIED RUNOFF COEFFICIENT = .7100
  S.C.S. CURVE NUMBER (AMC II) =   0
  INITIAL SUBAREA FLOW-LENGTH(FEET) =   130.00
  UPSTREAM ELEVATION(FEET) =    740.00
  DOWNSTREAM ELEVATION(FEET) =    731.00
  ELEVATION DIFFERENCE(FEET) =      9.00
  SUBAREA OVERLAND TIME OF FLOW(MIN.) =    3.684
  WARNING: INITIAL SUBAREA FLOW PATH LENGTH IS GREATER THAN
           THE MAXIMUM OVERLAND FLOW LENGTH =   100.00
           (Reference: Table 3-1B of Hydrology Manual)
           THE MAXIMUM OVERLAND FLOW LENGTH IS USED IN Tc CALCULATION!
   100 YEAR RAINFALL INTENSITY(INCH/HOUR) =  8.431
  NOTE: RAINFALL INTENSITY IS BASED ON Tc = 5-MINUTE.
  SUBAREA RUNOFF(CFS) =      0.78
  TOTAL AREA(ACRES) =      0.13   TOTAL RUNOFF(CFS) =      0.78

****************************************************************************
  FLOW PROCESS FROM NODE   2015.00 TO NODE   2009.00 IS CODE =  62
----------------------------------------------------------------------------
  >>>>>COMPUTE STREET FLOW TRAVEL TIME THRU SUBAREA<<<<<
  >>>>>(STREET TABLE SECTION #  1 USED)<<<<<
============================================================================
  UPSTREAM ELEVATION(FEET) =  731.00  DOWNSTREAM ELEVATION(FEET) =  719.50
  STREET LENGTH(FEET) =   250.00   CURB HEIGHT(INCHES) =  4.0
  STREET HALFWIDTH(FEET) = 16.00

  DISTANCE FROM CROWN TO CROSSFALL GRADEBREAK(FEET) =   8.00
  INSIDE STREET CROSSFALL(DECIMAL) =  0.020
  OUTSIDE STREET CROSSFALL(DECIMAL)  =  0.020

  SPECIFIED NUMBER OF HALFSTREETS CARRYING RUNOFF =  1
  STREET PARKWAY CROSSFALL(DECIMAL)  =  0.020
  Manning's FRICTION FACTOR for Streetflow Section(curb-to-curb) =   0.0150
  Manning's FRICTION FACTOR for Back-of-Walk Flow Section =   0.0150
```

```
    **TRAVEL TIME COMPUTED USING ESTIMATED FLOW(CFS) =       1.44
    STREETFLOW MODEL RESULTS USING ESTIMATED FLOW:
    STREET FLOW DEPTH(FEET) =  0.15
    HALFSTREET FLOOD WIDTH(FEET) =    6.49
    AVERAGE FLOW VELOCITY(FEET/SEC.) =    3.40
    PRODUCT OF DEPTH&VELOCITY(FT*FT/SEC.) =    0.50
  STREET FLOW TRAVEL TIME(MIN.) =   1.22   Tc(MIN.) =    4.91
   100 YEAR RAINFALL INTENSITY(INCH/HOUR) =  8.431
  NOTE: RAINFALL INTENSITY IS BASED ON Tc = 5-MINUTE.
  *USER SPECIFIED(SUBAREA):
  USER-SPECIFIED RUNOFF COEFFICIENT = .7100
  S.C.S. CURVE NUMBER (AMC II) =   0
  AREA-AVERAGE RUNOFF COEFFICIENT =  0.710
  SUBAREA AREA(ACRES) =    0.22      SUBAREA RUNOFF(CFS) =    1.32
  TOTAL AREA(ACRES) =        0.3        PEAK FLOW RATE(CFS) =       2.10

  END OF SUBAREA STREET FLOW HYDRAULICS:
  DEPTH(FEET) = 0.17   HALFSTREET FLOOD WIDTH(FEET) =   7.48
  FLOW VELOCITY(FEET/SEC.) =  3.74   DEPTH*VELOCITY(FT*FT/SEC.) =   0.63
  LONGEST FLOWPATH FROM NODE   2014.00 TO NODE   2009.00 =     380.00 FEET.

****************************************************************************
  FLOW PROCESS FROM NODE   2009.00 TO NODE   2009.00 IS CODE =   1
----------------------------------------------------------------------------
  >>>>>DESIGNATE INDEPENDENT STREAM FOR CONFLUENCE<<<<<
  >>>>>AND COMPUTE VARIOUS CONFLUENCED STREAM VALUES<<<<<
============================================================================
  TOTAL NUMBER OF STREAMS =  2
  CONFLUENCE VALUES USED FOR INDEPENDENT STREAM  2 ARE:
  TIME OF CONCENTRATION(MIN.) =    4.91
  RAINFALL INTENSITY(INCH/HR) =   8.43
  TOTAL STREAM AREA(ACRES) =     0.35
  PEAK FLOW RATE(CFS) AT CONFLUENCE =      2.10

  ** CONFLUENCE DATA **
  STREAM     RUNOFF       Tc      INTENSITY      AREA
  NUMBER      (CFS)     (MIN.)   (INCH/HOUR)    (ACRE)
      1        2.93     4.90        8.431          0.49
      2        2.10     4.91        8.431          0.35

  RAINFALL INTENSITY AND TIME OF CONCENTRATION RATIO
  CONFLUENCE FORMULA USED FOR  2 STREAMS.

  ** PEAK FLOW RATE TABLE **
  STREAM     RUNOFF      Tc      INTENSITY
  NUMBER      (CFS)    (MIN.)   (INCH/HOUR)
      1        5.02     4.90       8.431
      2        5.03     4.91       8.431

  COMPUTED CONFLUENCE ESTIMATES ARE AS FOLLOWS:
  PEAK FLOW RATE(CFS) =       5.03   Tc(MIN.) =    4.91
  TOTAL AREA(ACRES) =        0.8
  LONGEST FLOWPATH FROM NODE   2014.00 TO NODE   2009.00 =     380.00 FEET.

****************************************************************************
  FLOW PROCESS FROM NODE   2009.00 TO NODE   2013.00 IS CODE =  31
----------------------------------------------------------------------------
  >>>>>COMPUTE PIPE-FLOW TRAVEL TIME THRU SUBAREA<<<<<
  >>>>>USING COMPUTER-ESTIMATED PIPESIZE (NON-PRESSURE FLOW)<<<<<
============================================================================
  ELEVATION DATA: UPSTREAM(FEET) =   713.35  DOWNSTREAM(FEET) =   713.30
  FLOW LENGTH(FEET) =     3.00   MANNING'S N =  0.013
```

```
  DEPTH OF FLOW IN  15.0 INCH PIPE IS   8.7 INCHES
  PIPE-FLOW VELOCITY(FEET/SEC.) =   6.83
  ESTIMATED PIPE DIAMETER(INCH) =  15.00    NUMBER OF PIPES =   1
  PIPE-FLOW(CFS) =       5.03
  PIPE TRAVEL TIME(MIN.) =   0.01    Tc(MIN.) =    4.92
  LONGEST FLOWPATH FROM NODE   2014.00 TO NODE   2013.00 =     383.00 FEET.

****************************************************************************
  FLOW PROCESS FROM NODE   2013.00 TO NODE   2013.00 IS CODE =  10
----------------------------------------------------------------------------
  >>>>>MAIN-STREAM MEMORY COPIED ONTO MEMORY BANK # 2 <<<<<
============================================================================

****************************************************************************
  FLOW PROCESS FROM NODE   2010.00 TO NODE   2011.00 IS CODE =  21
----------------------------------------------------------------------------
  >>>>>RATIONAL METHOD INITIAL SUBAREA ANALYSIS<<<<<
============================================================================
  *USER SPECIFIED(SUBAREA):
  USER-SPECIFIED RUNOFF COEFFICIENT = .7100
  S.C.S. CURVE NUMBER (AMC II) =   0
  INITIAL SUBAREA FLOW-LENGTH(FEET) =    75.00
  UPSTREAM ELEVATION(FEET) =    726.00
  DOWNSTREAM ELEVATION(FEET) =    722.00
  ELEVATION DIFFERENCE(FEET) =      4.00
  SUBAREA OVERLAND TIME OF FLOW(MIN.) =    3.480
   100 YEAR RAINFALL INTENSITY(INCH/HOUR) =  8.431
  NOTE: RAINFALL INTENSITY IS BASED ON Tc = 5-MINUTE.
  SUBAREA RUNOFF(CFS) =      0.24
  TOTAL AREA(ACRES) =      0.04   TOTAL RUNOFF(CFS) =      0.24

****************************************************************************
  FLOW PROCESS FROM NODE   2011.00 TO NODE   2012.00 IS CODE =  62
----------------------------------------------------------------------------
  >>>>>COMPUTE STREET FLOW TRAVEL TIME THRU SUBAREA<<<<<
  >>>>>(STREET TABLE SECTION #  1 USED)<<<<<
============================================================================
  UPSTREAM ELEVATION(FEET) =  722.00  DOWNSTREAM ELEVATION(FEET) =  719.50
  STREET LENGTH(FEET) =   200.00   CURB HEIGHT(INCHES) =  4.0
  STREET HALFWIDTH(FEET) = 16.00

  DISTANCE FROM CROWN TO CROSSFALL GRADEBREAK(FEET) =   8.00
  INSIDE STREET CROSSFALL(DECIMAL) =  0.020
  OUTSIDE STREET CROSSFALL(DECIMAL)  =  0.020

  SPECIFIED NUMBER OF HALFSTREETS CARRYING RUNOFF =  1
  STREET PARKWAY CROSSFALL(DECIMAL)  =  0.020
  Manning's FRICTION FACTOR for Streetflow Section(curb-to-curb) =   0.0150
  Manning's FRICTION FACTOR for Back-of-Walk Flow Section =   0.0150

    **TRAVEL TIME COMPUTED USING ESTIMATED FLOW(CFS) =       0.91
    STREETFLOW MODEL RESULTS USING ESTIMATED FLOW:
    STREET FLOW DEPTH(FEET) =  0.16
    HALFSTREET FLOOD WIDTH(FEET) =    6.98
    AVERAGE FLOW VELOCITY(FEET/SEC.) =    1.85
    PRODUCT OF DEPTH&VELOCITY(FT*FT/SEC.) =    0.29
  STREET FLOW TRAVEL TIME(MIN.) =   1.80   Tc(MIN.) =    5.28
   100 YEAR RAINFALL INTENSITY(INCH/HOUR) =  8.140
  *USER SPECIFIED(SUBAREA):
  USER-SPECIFIED RUNOFF COEFFICIENT = .7100
  S.C.S. CURVE NUMBER (AMC II) =   0
  AREA-AVERAGE RUNOFF COEFFICIENT =  0.710
  SUBAREA AREA(ACRES) =    0.23      SUBAREA RUNOFF(CFS) =    1.33
```

```
  TOTAL AREA(ACRES) =        0.3        PEAK FLOW RATE(CFS) =       1.56

  END OF SUBAREA STREET FLOW HYDRAULICS:
  DEPTH(FEET) = 0.19   HALFSTREET FLOOD WIDTH(FEET) =   8.59
  FLOW VELOCITY(FEET/SEC.) =  2.11   DEPTH*VELOCITY(FT*FT/SEC.) =   0.40
  LONGEST FLOWPATH FROM NODE   2010.00 TO NODE   2012.00 =     275.00 FEET.

****************************************************************************
  FLOW PROCESS FROM NODE   2012.00 TO NODE   2012.00 IS CODE =   1
----------------------------------------------------------------------------
  >>>>>DESIGNATE INDEPENDENT STREAM FOR CONFLUENCE<<<<<
============================================================================
  TOTAL NUMBER OF STREAMS =  2
  CONFLUENCE VALUES USED FOR INDEPENDENT STREAM  1 ARE:
  TIME OF CONCENTRATION(MIN.) =    5.28
  RAINFALL INTENSITY(INCH/HR) =   8.14
  TOTAL STREAM AREA(ACRES) =     0.27
  PEAK FLOW RATE(CFS) AT CONFLUENCE =      1.56

****************************************************************************
  FLOW PROCESS FROM NODE   2016.00 TO NODE   2017.00 IS CODE =  21
----------------------------------------------------------------------------
  >>>>>RATIONAL METHOD INITIAL SUBAREA ANALYSIS<<<<<
============================================================================
  *USER SPECIFIED(SUBAREA):
  USER-SPECIFIED RUNOFF COEFFICIENT = .7100
  S.C.S. CURVE NUMBER (AMC II) =   0
  INITIAL SUBAREA FLOW-LENGTH(FEET) =   160.00
  UPSTREAM ELEVATION(FEET) =    740.00
  DOWNSTREAM ELEVATION(FEET) =    731.00
  ELEVATION DIFFERENCE(FEET) =      9.00
  SUBAREA OVERLAND TIME OF FLOW(MIN.) =    3.947
  WARNING: INITIAL SUBAREA FLOW PATH LENGTH IS GREATER THAN
           THE MAXIMUM OVERLAND FLOW LENGTH =   100.00
           (Reference: Table 3-1B of Hydrology Manual)
           THE MAXIMUM OVERLAND FLOW LENGTH IS USED IN Tc CALCULATION!
   100 YEAR RAINFALL INTENSITY(INCH/HOUR) =  8.431
  NOTE: RAINFALL INTENSITY IS BASED ON Tc = 5-MINUTE.
  SUBAREA RUNOFF(CFS) =      0.54
  TOTAL AREA(ACRES) =      0.09   TOTAL RUNOFF(CFS) =      0.54

****************************************************************************
  FLOW PROCESS FROM NODE   2017.00 TO NODE   2012.00 IS CODE =  62
----------------------------------------------------------------------------
  >>>>>COMPUTE STREET FLOW TRAVEL TIME THRU SUBAREA<<<<<
  >>>>>(STREET TABLE SECTION #  1 USED)<<<<<
============================================================================
  UPSTREAM ELEVATION(FEET) =  731.00  DOWNSTREAM ELEVATION(FEET) =  719.50
  STREET LENGTH(FEET) =   275.00   CURB HEIGHT(INCHES) =  4.0
  STREET HALFWIDTH(FEET) = 16.00

  DISTANCE FROM CROWN TO CROSSFALL GRADEBREAK(FEET) =   8.00
  INSIDE STREET CROSSFALL(DECIMAL) =  0.020
  OUTSIDE STREET CROSSFALL(DECIMAL)  =  0.020

  SPECIFIED NUMBER OF HALFSTREETS CARRYING RUNOFF =  1
  STREET PARKWAY CROSSFALL(DECIMAL)  =  0.020
  Manning's FRICTION FACTOR for Streetflow Section(curb-to-curb) =   0.0150
  Manning's FRICTION FACTOR for Back-of-Walk Flow Section =   0.0150

    **TRAVEL TIME COMPUTED USING ESTIMATED FLOW(CFS) =       0.93
    STREETFLOW MODEL RESULTS USING ESTIMATED FLOW:
    STREET FLOW DEPTH(FEET) =  0.13
```

```
    HALFSTREET FLOOD WIDTH(FEET) =    5.62
    AVERAGE FLOW VELOCITY(FEET/SEC.) =    2.94
    PRODUCT OF DEPTH&VELOCITY(FT*FT/SEC.) =    0.38
  STREET FLOW TRAVEL TIME(MIN.) =   1.56   Tc(MIN.) =    5.51
   100 YEAR RAINFALL INTENSITY(INCH/HOUR) =  7.921
  *USER SPECIFIED(SUBAREA):
  USER-SPECIFIED RUNOFF COEFFICIENT = .7100
  S.C.S. CURVE NUMBER (AMC II) =   0
  AREA-AVERAGE RUNOFF COEFFICIENT =  0.710
  SUBAREA AREA(ACRES) =    0.14      SUBAREA RUNOFF(CFS) =    0.79
  TOTAL AREA(ACRES) =        0.2        PEAK FLOW RATE(CFS) =       1.29

  END OF SUBAREA STREET FLOW HYDRAULICS:
  DEPTH(FEET) = 0.15   HALFSTREET FLOOD WIDTH(FEET) =   6.36
  FLOW VELOCITY(FEET/SEC.) =  3.18   DEPTH*VELOCITY(FT*FT/SEC.) =   0.46
  LONGEST FLOWPATH FROM NODE   2016.00 TO NODE   2012.00 =     435.00 FEET.

****************************************************************************
  FLOW PROCESS FROM NODE   2012.00 TO NODE   2012.00 IS CODE =   1
----------------------------------------------------------------------------
  >>>>>DESIGNATE INDEPENDENT STREAM FOR CONFLUENCE<<<<<
  >>>>>AND COMPUTE VARIOUS CONFLUENCED STREAM VALUES<<<<<
============================================================================
  TOTAL NUMBER OF STREAMS =  2
  CONFLUENCE VALUES USED FOR INDEPENDENT STREAM  2 ARE:
  TIME OF CONCENTRATION(MIN.) =    5.51
  RAINFALL INTENSITY(INCH/HR) =   7.92
  TOTAL STREAM AREA(ACRES) =     0.23
  PEAK FLOW RATE(CFS) AT CONFLUENCE =      1.29

  ** CONFLUENCE DATA **
  STREAM     RUNOFF       Tc      INTENSITY      AREA
  NUMBER      (CFS)     (MIN.)   (INCH/HOUR)    (ACRE)
      1        1.56     5.28        8.140          0.27
      2        1.29     5.51        7.921          0.23

  RAINFALL INTENSITY AND TIME OF CONCENTRATION RATIO
  CONFLUENCE FORMULA USED FOR  2 STREAMS.

  ** PEAK FLOW RATE TABLE **
  STREAM     RUNOFF      Tc      INTENSITY
  NUMBER      (CFS)    (MIN.)   (INCH/HOUR)
      1        2.80     5.28       8.140
      2        2.81     5.51       7.921

  COMPUTED CONFLUENCE ESTIMATES ARE AS FOLLOWS:
  PEAK FLOW RATE(CFS) =       2.81   Tc(MIN.) =    5.51
  TOTAL AREA(ACRES) =        0.5
  LONGEST FLOWPATH FROM NODE   2016.00 TO NODE   2012.00 =     435.00 FEET.

****************************************************************************
  FLOW PROCESS FROM NODE   2012.00 TO NODE   2013.00 IS CODE =  31
----------------------------------------------------------------------------
  >>>>>COMPUTE PIPE-FLOW TRAVEL TIME THRU SUBAREA<<<<<
  >>>>>USING COMPUTER-ESTIMATED PIPESIZE (NON-PRESSURE FLOW)<<<<<
============================================================================
  ELEVATION DATA: UPSTREAM(FEET) =   713.50  DOWNSTREAM(FEET) =   713.30
  FLOW LENGTH(FEET) =    20.00   MANNING'S N =  0.013
  DEPTH OF FLOW IN  12.0 INCH PIPE IS   8.4 INCHES
  PIPE-FLOW VELOCITY(FEET/SEC.) =   4.81
  ESTIMATED PIPE DIAMETER(INCH) =  12.00    NUMBER OF PIPES =   1
  PIPE-FLOW(CFS) =       2.81
  PIPE TRAVEL TIME(MIN.) =   0.07    Tc(MIN.) =    5.58
```

```
  LONGEST FLOWPATH FROM NODE   2016.00 TO NODE   2013.00 =     455.00 FEET.

****************************************************************************
  FLOW PROCESS FROM NODE   2013.00 TO NODE   2013.00 IS CODE =  11
----------------------------------------------------------------------------
  >>>>>CONFLUENCE MEMORY BANK # 1 WITH THE MAIN-STREAM MEMORY<<<<<
============================================================================

  ** MAIN STREAM CONFLUENCE DATA **
  STREAM     RUNOFF      Tc      INTENSITY     AREA
  NUMBER      (CFS)    (MIN.)   (INCH/HOUR)   (ACRE)
      1        2.81     5.58       7.857        0.50
  LONGEST FLOWPATH FROM NODE   2016.00 TO NODE   2013.00 =     455.00 FEET.

  ** MEMORY BANK #  1 CONFLUENCE DATA **
  STREAM     RUNOFF      Tc      INTENSITY     AREA
  NUMBER      (CFS)    (MIN.)   (INCH/HOUR)   (ACRE)
      1        6.66     7.24       6.638        1.32
  LONGEST FLOWPATH FROM NODE   2001.00 TO NODE   2013.00 =     745.00 FEET.

  ** PEAK FLOW RATE TABLE **
  STREAM    RUNOFF       Tc      INTENSITY
  NUMBER     (CFS)     (MIN.)   (INCH/HOUR)
      1       7.94       5.58        7.857
      2       9.04       7.24        6.638

  COMPUTED CONFLUENCE ESTIMATES ARE AS FOLLOWS:
  PEAK FLOW RATE(CFS) =       9.04   Tc(MIN.) =    7.24
  TOTAL AREA(ACRES) =        1.8

****************************************************************************
  FLOW PROCESS FROM NODE   2013.00 TO NODE   2013.00 IS CODE =  11
----------------------------------------------------------------------------
  >>>>>CONFLUENCE MEMORY BANK # 2 WITH THE MAIN-STREAM MEMORY<<<<<
============================================================================

  ** MAIN STREAM CONFLUENCE DATA **
  STREAM     RUNOFF      Tc      INTENSITY     AREA
  NUMBER      (CFS)    (MIN.)   (INCH/HOUR)   (ACRE)
      1        9.04     7.24       6.638        1.82
  LONGEST FLOWPATH FROM NODE   2001.00 TO NODE   2013.00 =     745.00 FEET.

  ** MEMORY BANK #  2 CONFLUENCE DATA **
  STREAM     RUNOFF      Tc      INTENSITY     AREA
  NUMBER      (CFS)    (MIN.)   (INCH/HOUR)   (ACRE)
      1        5.03     4.92       8.431        0.84
  LONGEST FLOWPATH FROM NODE   2014.00 TO NODE   2013.00 =     383.00 FEET.

  ** PEAK FLOW RATE TABLE **
  STREAM    RUNOFF       Tc      INTENSITY
  NUMBER     (CFS)     (MIN.)   (INCH/HOUR)
      1      11.16       4.92        8.431
      2      13.00       7.24        6.638

  COMPUTED CONFLUENCE ESTIMATES ARE AS FOLLOWS:
  PEAK FLOW RATE(CFS) =      13.00   Tc(MIN.) =    7.24
  TOTAL AREA(ACRES) =        2.7

****************************************************************************
  FLOW PROCESS FROM NODE   2013.00 TO NODE   2013.00 IS CODE =  12
----------------------------------------------------------------------------
  >>>>>CLEAR MEMORY BANK # 1 <<<<<
============================================================================
```

```
****************************************************************************
  FLOW PROCESS FROM NODE   2013.00 TO NODE   2013.00 IS CODE =  12
----------------------------------------------------------------------------
  >>>>>CLEAR MEMORY BANK # 2 <<<<<
============================================================================

****************************************************************************
  FLOW PROCESS FROM NODE   2013.00 TO NODE   2019.00 IS CODE =  31
----------------------------------------------------------------------------
  >>>>>COMPUTE PIPE-FLOW TRAVEL TIME THRU SUBAREA<<<<<
  >>>>>USING COMPUTER-ESTIMATED PIPESIZE (NON-PRESSURE FLOW)<<<<<
============================================================================
  ELEVATION DATA: UPSTREAM(FEET) =   713.30  DOWNSTREAM(FEET) =   712.45
  FLOW LENGTH(FEET) =    85.00   MANNING'S N =  0.013
  DEPTH OF FLOW IN  21.0 INCH PIPE IS  15.1 INCHES
  PIPE-FLOW VELOCITY(FEET/SEC.) =   7.03
  ESTIMATED PIPE DIAMETER(INCH) =  21.00    NUMBER OF PIPES =   1
  PIPE-FLOW(CFS) =      13.00
  PIPE TRAVEL TIME(MIN.) =   0.20    Tc(MIN.) =    7.45
  LONGEST FLOWPATH FROM NODE   2001.00 TO NODE   2019.00 =     830.00 FEET.

****************************************************************************
  FLOW PROCESS FROM NODE   2019.00 TO NODE   2025.00 IS CODE =  31
----------------------------------------------------------------------------
  >>>>>COMPUTE PIPE-FLOW TRAVEL TIME THRU SUBAREA<<<<<
  >>>>>USING COMPUTER-ESTIMATED PIPESIZE (NON-PRESSURE FLOW)<<<<<
============================================================================
  ELEVATION DATA: UPSTREAM(FEET) =   712.45  DOWNSTREAM(FEET) =   702.25
  FLOW LENGTH(FEET) =   390.00   MANNING'S N =  0.013
  DEPTH OF FLOW IN  18.0 INCH PIPE IS  12.3 INCHES
  PIPE-FLOW VELOCITY(FEET/SEC.) =  10.15
  ESTIMATED PIPE DIAMETER(INCH) =  18.00    NUMBER OF PIPES =   1
  PIPE-FLOW(CFS) =      13.00
  PIPE TRAVEL TIME(MIN.) =   0.64    Tc(MIN.) =    8.09
  LONGEST FLOWPATH FROM NODE   2001.00 TO NODE   2025.00 =    1220.00 FEET.

****************************************************************************
  FLOW PROCESS FROM NODE   2025.00 TO NODE   2025.00 IS CODE =   1
----------------------------------------------------------------------------
  >>>>>DESIGNATE INDEPENDENT STREAM FOR CONFLUENCE<<<<<
============================================================================
  TOTAL NUMBER OF STREAMS =  2
  CONFLUENCE VALUES USED FOR INDEPENDENT STREAM  1 ARE:
  TIME OF CONCENTRATION(MIN.) =    8.09
  RAINFALL INTENSITY(INCH/HR) =   6.18
  TOTAL STREAM AREA(ACRES) =     2.66
  PEAK FLOW RATE(CFS) AT CONFLUENCE =     13.00

****************************************************************************
  FLOW PROCESS FROM NODE   2020.00 TO NODE   2021.00 IS CODE =  21
----------------------------------------------------------------------------
  >>>>>RATIONAL METHOD INITIAL SUBAREA ANALYSIS<<<<<
============================================================================
  *USER SPECIFIED(SUBAREA):
  USER-SPECIFIED RUNOFF COEFFICIENT = .7100
  S.C.S. CURVE NUMBER (AMC II) =   0
  INITIAL SUBAREA FLOW-LENGTH(FEET) =    90.00
  UPSTREAM ELEVATION(FEET) =    721.00
  DOWNSTREAM ELEVATION(FEET) =    718.00
  ELEVATION DIFFERENCE(FEET) =      3.00
  SUBAREA OVERLAND TIME OF FLOW(MIN.) =    4.458
   100 YEAR RAINFALL INTENSITY(INCH/HOUR) =  8.431
```

```
  NOTE: RAINFALL INTENSITY IS BASED ON Tc = 5-MINUTE.
  SUBAREA RUNOFF(CFS) =      0.36
  TOTAL AREA(ACRES) =      0.06   TOTAL RUNOFF(CFS) =      0.36

****************************************************************************
  FLOW PROCESS FROM NODE   2021.00 TO NODE   2022.50 IS CODE =  62
----------------------------------------------------------------------------
  >>>>>COMPUTE STREET FLOW TRAVEL TIME THRU SUBAREA<<<<<
  >>>>>(STREET TABLE SECTION #  1 USED)<<<<<
============================================================================
  UPSTREAM ELEVATION(FEET) =  718.00  DOWNSTREAM ELEVATION(FEET) =  708.50
  STREET LENGTH(FEET) =   275.00   CURB HEIGHT(INCHES) =  4.0
  STREET HALFWIDTH(FEET) = 16.00

  DISTANCE FROM CROWN TO CROSSFALL GRADEBREAK(FEET) =   8.00
  INSIDE STREET CROSSFALL(DECIMAL) =  0.020
  OUTSIDE STREET CROSSFALL(DECIMAL)  =  0.020

  SPECIFIED NUMBER OF HALFSTREETS CARRYING RUNOFF =  1
  STREET PARKWAY CROSSFALL(DECIMAL)  =  0.020
  Manning's FRICTION FACTOR for Streetflow Section(curb-to-curb) =   0.0150
  Manning's FRICTION FACTOR for Back-of-Walk Flow Section =   0.0150

    **TRAVEL TIME COMPUTED USING ESTIMATED FLOW(CFS) =       1.82
    STREETFLOW MODEL RESULTS USING ESTIMATED FLOW:
    STREET FLOW DEPTH(FEET) =  0.17
    HALFSTREET FLOOD WIDTH(FEET) =    7.48
    AVERAGE FLOW VELOCITY(FEET/SEC.) =    3.25
    PRODUCT OF DEPTH&VELOCITY(FT*FT/SEC.) =    0.54
  STREET FLOW TRAVEL TIME(MIN.) =   1.41   Tc(MIN.) =    5.87
   100 YEAR RAINFALL INTENSITY(INCH/HOUR) =  7.603
  *USER SPECIFIED(SUBAREA):
  USER-SPECIFIED RUNOFF COEFFICIENT = .7100
  S.C.S. CURVE NUMBER (AMC II) =   0
  AREA-AVERAGE RUNOFF COEFFICIENT =  0.710
  SUBAREA AREA(ACRES) =    0.54      SUBAREA RUNOFF(CFS) =    2.92
  TOTAL AREA(ACRES) =        0.6        PEAK FLOW RATE(CFS) =       3.24

  END OF SUBAREA STREET FLOW HYDRAULICS:
  DEPTH(FEET) = 0.20   HALFSTREET FLOOD WIDTH(FEET) =   9.28
  FLOW VELOCITY(FEET/SEC.) =  3.75   DEPTH*VELOCITY(FT*FT/SEC.) =   0.76
  LONGEST FLOWPATH FROM NODE   2020.00 TO NODE   2022.50 =     365.00 FEET.

****************************************************************************
  FLOW PROCESS FROM NODE   2022.50 TO NODE   2025.00 IS CODE =  31
----------------------------------------------------------------------------
  >>>>>COMPUTE PIPE-FLOW TRAVEL TIME THRU SUBAREA<<<<<
  >>>>>USING COMPUTER-ESTIMATED PIPESIZE (NON-PRESSURE FLOW)<<<<<
============================================================================
  ELEVATION DATA: UPSTREAM(FEET) =   702.50  DOWNSTREAM(FEET) =   702.25
  FLOW LENGTH(FEET) =    25.00   MANNING'S N =  0.013
  DEPTH OF FLOW IN  12.0 INCH PIPE IS   9.4 INCHES
  PIPE-FLOW VELOCITY(FEET/SEC.) =   4.90
  ESTIMATED PIPE DIAMETER(INCH) =  12.00    NUMBER OF PIPES =   1
  PIPE-FLOW(CFS) =       3.24
  PIPE TRAVEL TIME(MIN.) =   0.09    Tc(MIN.) =    5.95
  LONGEST FLOWPATH FROM NODE   2020.00 TO NODE   2025.00 =     390.00 FEET.

****************************************************************************
  FLOW PROCESS FROM NODE   2025.00 TO NODE   2025.00 IS CODE =   1
----------------------------------------------------------------------------
  >>>>>DESIGNATE INDEPENDENT STREAM FOR CONFLUENCE<<<<<
  >>>>>AND COMPUTE VARIOUS CONFLUENCED STREAM VALUES<<<<<
```

```
==============================================================================
  TOTAL NUMBER OF STREAMS =  2
  CONFLUENCE VALUES USED FOR INDEPENDENT STREAM  2 ARE:
  TIME OF CONCENTRATION(MIN.) =    5.95
  RAINFALL INTENSITY(INCH/HR) =   7.53
  TOTAL STREAM AREA(ACRES) =     0.60
  PEAK FLOW RATE(CFS) AT CONFLUENCE =      3.24

  ** CONFLUENCE DATA **
  STREAM     RUNOFF       Tc      INTENSITY      AREA
  NUMBER      (CFS)     (MIN.)   (INCH/HOUR)    (ACRE)
      1       13.00     8.09        6.183          2.66
      2        3.24     5.95        7.533          0.60

  RAINFALL INTENSITY AND TIME OF CONCENTRATION RATIO
  CONFLUENCE FORMULA USED FOR  2 STREAMS.

  ** PEAK FLOW RATE TABLE **
  STREAM     RUNOFF      Tc      INTENSITY
  NUMBER      (CFS)    (MIN.)   (INCH/HOUR)
      1       12.81     5.95       7.533
      2       15.66     8.09       6.183

  COMPUTED CONFLUENCE ESTIMATES ARE AS FOLLOWS:
  PEAK FLOW RATE(CFS) =      15.66   Tc(MIN.) =    8.09
  TOTAL AREA(ACRES) =        3.3
  LONGEST FLOWPATH FROM NODE   2001.00 TO NODE   2025.00 =    1220.00 FEET.

****************************************************************************
  FLOW PROCESS FROM NODE   2025.00 TO NODE   2027.00 IS CODE =  31
----------------------------------------------------------------------------
  >>>>>COMPUTE PIPE-FLOW TRAVEL TIME THRU SUBAREA<<<<<
  >>>>>USING COMPUTER-ESTIMATED PIPESIZE (NON-PRESSURE FLOW)<<<<<
==============================================================================
  ELEVATION DATA: UPSTREAM(FEET) =   702.25  DOWNSTREAM(FEET) =   698.00
  FLOW LENGTH(FEET) =   315.00   MANNING'S N =  0.013
  DEPTH OF FLOW IN  21.0 INCH PIPE IS  15.5 INCHES
  PIPE-FLOW VELOCITY(FEET/SEC.) =   8.21
  ESTIMATED PIPE DIAMETER(INCH) =  21.00    NUMBER OF PIPES =   1
  PIPE-FLOW(CFS) =      15.66
  PIPE TRAVEL TIME(MIN.) =   0.64    Tc(MIN.) =    8.73
  LONGEST FLOWPATH FROM NODE   2001.00 TO NODE   2027.00 =    1535.00 FEET.

****************************************************************************
  FLOW PROCESS FROM NODE   2027.00 TO NODE   2027.00 IS CODE =   1
----------------------------------------------------------------------------
  >>>>>DESIGNATE INDEPENDENT STREAM FOR CONFLUENCE<<<<<
==============================================================================
  TOTAL NUMBER OF STREAMS =  2
  CONFLUENCE VALUES USED FOR INDEPENDENT STREAM  1 ARE:
  TIME OF CONCENTRATION(MIN.) =    8.73
  RAINFALL INTENSITY(INCH/HR) =   5.89
  TOTAL STREAM AREA(ACRES) =     3.26
  PEAK FLOW RATE(CFS) AT CONFLUENCE =     15.66

****************************************************************************
  FLOW PROCESS FROM NODE   2023.00 TO NODE   2024.00 IS CODE =  21
----------------------------------------------------------------------------
  >>>>>RATIONAL METHOD INITIAL SUBAREA ANALYSIS<<<<<
==============================================================================
  *USER SPECIFIED(SUBAREA):
  USER-SPECIFIED RUNOFF COEFFICIENT = .7100
  S.C.S. CURVE NUMBER (AMC II) =   0
```

```
  INITIAL SUBAREA FLOW-LENGTH(FEET) =   130.00
  UPSTREAM ELEVATION(FEET) =    721.00
  DOWNSTREAM ELEVATION(FEET) =    715.50
  ELEVATION DIFFERENCE(FEET) =      5.50
  SUBAREA OVERLAND TIME OF FLOW(MIN.) =    4.299
  WARNING: INITIAL SUBAREA FLOW PATH LENGTH IS GREATER THAN
           THE MAXIMUM OVERLAND FLOW LENGTH =    98.08
           (Reference: Table 3-1B of Hydrology Manual)
           THE MAXIMUM OVERLAND FLOW LENGTH IS USED IN Tc CALCULATION!
   100 YEAR RAINFALL INTENSITY(INCH/HOUR) =  8.431
  NOTE: RAINFALL INTENSITY IS BASED ON Tc = 5-MINUTE.
  SUBAREA RUNOFF(CFS) =      1.20
  TOTAL AREA(ACRES) =      0.20   TOTAL RUNOFF(CFS) =      1.20

****************************************************************************
  FLOW PROCESS FROM NODE   2024.00 TO NODE   2026.00 IS CODE =  62
----------------------------------------------------------------------------
  >>>>>COMPUTE STREET FLOW TRAVEL TIME THRU SUBAREA<<<<<
  >>>>>(STREET TABLE SECTION #  1 USED)<<<<<
============================================================================
  UPSTREAM ELEVATION(FEET) =  715.50  DOWNSTREAM ELEVATION(FEET) =  704.00
  STREET LENGTH(FEET) =   600.00   CURB HEIGHT(INCHES) =  4.0
  STREET HALFWIDTH(FEET) = 16.00

  DISTANCE FROM CROWN TO CROSSFALL GRADEBREAK(FEET) =   8.00
  INSIDE STREET CROSSFALL(DECIMAL) =  0.020
  OUTSIDE STREET CROSSFALL(DECIMAL)  =  0.020

  SPECIFIED NUMBER OF HALFSTREETS CARRYING RUNOFF =  1
  STREET PARKWAY CROSSFALL(DECIMAL)  =  0.020
  Manning's FRICTION FACTOR for Streetflow Section(curb-to-curb) =   0.0150
  Manning's FRICTION FACTOR for Back-of-Walk Flow Section =   0.0150

    **TRAVEL TIME COMPUTED USING ESTIMATED FLOW(CFS) =       8.56
    STREETFLOW MODEL RESULTS USING ESTIMATED FLOW:
    STREET FLOW DEPTH(FEET) =  0.32
    HALFSTREET FLOOD WIDTH(FEET) =   14.97
    AVERAGE FLOW VELOCITY(FEET/SEC.) =    3.82
    PRODUCT OF DEPTH&VELOCITY(FT*FT/SEC.) =    1.21
  STREET FLOW TRAVEL TIME(MIN.) =   2.62   Tc(MIN.) =    6.92
   100 YEAR RAINFALL INTENSITY(INCH/HOUR) =  6.838
  *USER SPECIFIED(SUBAREA):
  USER-SPECIFIED RUNOFF COEFFICIENT = .7100
  S.C.S. CURVE NUMBER (AMC II) =   0
  AREA-AVERAGE RUNOFF COEFFICIENT =  0.710
  SUBAREA AREA(ACRES) =    3.00      SUBAREA RUNOFF(CFS) =   14.56
  TOTAL AREA(ACRES) =        3.2        PEAK FLOW RATE(CFS) =      15.53

  END OF SUBAREA STREET FLOW HYDRAULICS:
  DEPTH(FEET) = 0.34   HALFSTREET FLOOD WIDTH(FEET) =  16.23
  FLOW VELOCITY(FEET/SEC.) =  3.99   DEPTH*VELOCITY(FT*FT/SEC.) =   1.35
  *NOTE: INITIAL SUBAREA NOMOGRAPH WITH SUBAREA PARAMETERS,
         AND L =  600.0 FT WITH ELEVATION-DROP =  11.5 FT, IS   17.9 CFS,
         WHICH EXCEEDS THE TOP-OF-CURB STREET CAPACITY AT NODE   2026.00
  LONGEST FLOWPATH FROM NODE   2023.00 TO NODE   2026.00 =     730.00 FEET.

****************************************************************************
  FLOW PROCESS FROM NODE   2026.00 TO NODE   2027.00 IS CODE =  31
----------------------------------------------------------------------------
  >>>>>COMPUTE PIPE-FLOW TRAVEL TIME THRU SUBAREA<<<<<
  >>>>>USING COMPUTER-ESTIMATED PIPESIZE (NON-PRESSURE FLOW)<<<<<
============================================================================
  ELEVATION DATA: UPSTREAM(FEET) =   698.25  DOWNSTREAM(FEET) =   698.00
```

```
  FLOW LENGTH(FEET) =    25.00   MANNING'S N =  0.013
  DEPTH OF FLOW IN  24.0 INCH PIPE IS  15.1 INCHES
  PIPE-FLOW VELOCITY(FEET/SEC.) =   7.44
  ESTIMATED PIPE DIAMETER(INCH) =  24.00    NUMBER OF PIPES =   1
  PIPE-FLOW(CFS) =      15.53
  PIPE TRAVEL TIME(MIN.) =   0.06    Tc(MIN.) =    6.97
  LONGEST FLOWPATH FROM NODE   2023.00 TO NODE   2027.00 =     755.00 FEET.

****************************************************************************
  FLOW PROCESS FROM NODE   2027.00 TO NODE   2027.00 IS CODE =   1
----------------------------------------------------------------------------
  >>>>>DESIGNATE INDEPENDENT STREAM FOR CONFLUENCE<<<<<
  >>>>>AND COMPUTE VARIOUS CONFLUENCED STREAM VALUES<<<<<
============================================================================
  TOTAL NUMBER OF STREAMS =  2
  CONFLUENCE VALUES USED FOR INDEPENDENT STREAM  2 ARE:
  TIME OF CONCENTRATION(MIN.) =    6.97
  RAINFALL INTENSITY(INCH/HR) =   6.80
  TOTAL STREAM AREA(ACRES) =     3.20
  PEAK FLOW RATE(CFS) AT CONFLUENCE =     15.53

  ** CONFLUENCE DATA **
  STREAM     RUNOFF       Tc      INTENSITY      AREA
  NUMBER      (CFS)     (MIN.)   (INCH/HOUR)    (ACRE)
      1       15.66     8.73        5.887          3.26
      2       15.53     6.97        6.802          3.20

  RAINFALL INTENSITY AND TIME OF CONCENTRATION RATIO
  CONFLUENCE FORMULA USED FOR  2 STREAMS.

  ** PEAK FLOW RATE TABLE **
  STREAM     RUNOFF      Tc      INTENSITY
  NUMBER      (CFS)    (MIN.)   (INCH/HOUR)
      1       29.08     6.97       6.802
      2       29.10     8.73       5.887

  COMPUTED CONFLUENCE ESTIMATES ARE AS FOLLOWS:
  PEAK FLOW RATE(CFS) =      29.10   Tc(MIN.) =    8.73
  TOTAL AREA(ACRES) =        6.5
  LONGEST FLOWPATH FROM NODE   2001.00 TO NODE   2027.00 =    1535.00 FEET.

****************************************************************************
  FLOW PROCESS FROM NODE   2027.00 TO NODE   2028.00 IS CODE =  31
----------------------------------------------------------------------------
  >>>>>COMPUTE PIPE-FLOW TRAVEL TIME THRU SUBAREA<<<<<
  >>>>>USING COMPUTER-ESTIMATED PIPESIZE (NON-PRESSURE FLOW)<<<<<
============================================================================
  ELEVATION DATA: UPSTREAM(FEET) =   698.00  DOWNSTREAM(FEET) =   695.55
  FLOW LENGTH(FEET) =   245.00   MANNING'S N =  0.013
  DEPTH OF FLOW IN  27.0 INCH PIPE IS  21.9 INCHES
  PIPE-FLOW VELOCITY(FEET/SEC.) =   8.42
  ESTIMATED PIPE DIAMETER(INCH) =  27.00    NUMBER OF PIPES =   1
  PIPE-FLOW(CFS) =      29.10
  PIPE TRAVEL TIME(MIN.) =   0.48    Tc(MIN.) =    9.21
  LONGEST FLOWPATH FROM NODE   2001.00 TO NODE   2028.00 =    1780.00 FEET.

****************************************************************************
  FLOW PROCESS FROM NODE   2028.00 TO NODE   2029.00 IS CODE =  31
----------------------------------------------------------------------------
  >>>>>COMPUTE PIPE-FLOW TRAVEL TIME THRU SUBAREA<<<<<
  >>>>>USING COMPUTER-ESTIMATED PIPESIZE (NON-PRESSURE FLOW)<<<<<
============================================================================
  ELEVATION DATA: UPSTREAM(FEET) =   695.55  DOWNSTREAM(FEET) =   690.00
```

```
  FLOW LENGTH(FEET) =   140.00   MANNING'S N =  0.013
  DEPTH OF FLOW IN  21.0 INCH PIPE IS  16.7 INCHES
  PIPE-FLOW VELOCITY(FEET/SEC.) =  14.18
  ESTIMATED PIPE DIAMETER(INCH) =  21.00    NUMBER OF PIPES =   1
  PIPE-FLOW(CFS) =      29.10
  PIPE TRAVEL TIME(MIN.) =   0.16    Tc(MIN.) =    9.37
  LONGEST FLOWPATH FROM NODE   2001.00 TO NODE   2029.00 =    1920.00 FEET.

****************************************************************************
  FLOW PROCESS FROM NODE   2029.00 TO NODE   2030.00 IS CODE =  31
----------------------------------------------------------------------------
  >>>>>COMPUTE PIPE-FLOW TRAVEL TIME THRU SUBAREA<<<<<
  >>>>>USING COMPUTER-ESTIMATED PIPESIZE (NON-PRESSURE FLOW)<<<<<
============================================================================
  ELEVATION DATA: UPSTREAM(FEET) =   690.00  DOWNSTREAM(FEET) =   686.00
  FLOW LENGTH(FEET) =    40.00   MANNING'S N =  0.013
  DEPTH OF FLOW IN  18.0 INCH PIPE IS  13.6 INCHES
  PIPE-FLOW VELOCITY(FEET/SEC.) =  20.24
  ESTIMATED PIPE DIAMETER(INCH) =  18.00    NUMBER OF PIPES =   1
  PIPE-FLOW(CFS) =      29.10
  PIPE TRAVEL TIME(MIN.) =   0.03    Tc(MIN.) =    9.41
  LONGEST FLOWPATH FROM NODE   2001.00 TO NODE   2030.00 =    1960.00 FEET.

****************************************************************************
  FLOW PROCESS FROM NODE   2030.00 TO NODE   2041.00 IS CODE =  52
----------------------------------------------------------------------------
  >>>>>COMPUTE NATURAL VALLEY CHANNEL FLOW<<<<<
  >>>>>TRAVELTIME THRU SUBAREA<<<<<
============================================================================
  ELEVATION DATA: UPSTREAM(FEET) =    686.00  DOWNSTREAM(FEET) =    660.00
  CHANNEL LENGTH THRU SUBAREA(FEET) =   340.00   CHANNEL SLOPE =  0.0765
  CHANNEL FLOW THRU SUBAREA(CFS) =      29.10
  FLOW VELOCITY(FEET/SEC) =   9.18 (PER LACFCD/RCFC&WCD HYDROLOGY MANUAL)
  TRAVEL TIME(MIN.) =   0.62   Tc(MIN.) =   10.02
  LONGEST FLOWPATH FROM NODE   2001.00 TO NODE   2041.00 =    2300.00 FEET.

****************************************************************************
  FLOW PROCESS FROM NODE   2041.00 TO NODE   2041.00 IS CODE =  10
----------------------------------------------------------------------------
  >>>>>MAIN-STREAM MEMORY COPIED ONTO MEMORY BANK # 1 <<<<<
============================================================================

****************************************************************************
  FLOW PROCESS FROM NODE   2031.00 TO NODE   2032.00 IS CODE =  21
----------------------------------------------------------------------------
  >>>>>RATIONAL METHOD INITIAL SUBAREA ANALYSIS<<<<<
============================================================================
  *USER SPECIFIED(SUBAREA):
  USER-SPECIFIED RUNOFF COEFFICIENT = .4100
  S.C.S. CURVE NUMBER (AMC II) =   0
  INITIAL SUBAREA FLOW-LENGTH(FEET) =   100.00
  UPSTREAM ELEVATION(FEET) =    742.00
  DOWNSTREAM ELEVATION(FEET) =    740.00
  ELEVATION DIFFERENCE(FEET) =      2.00
  SUBAREA OVERLAND TIME OF FLOW(MIN.) =    8.817
  WARNING: INITIAL SUBAREA FLOW PATH LENGTH IS GREATER THAN
           THE MAXIMUM OVERLAND FLOW LENGTH =    80.00
           (Reference: Table 3-1B of Hydrology Manual)
           THE MAXIMUM OVERLAND FLOW LENGTH IS USED IN Tc CALCULATION!
   100 YEAR RAINFALL INTENSITY(INCH/HOUR) =  5.848
  SUBAREA RUNOFF(CFS) =      0.43
  TOTAL AREA(ACRES) =      0.18   TOTAL RUNOFF(CFS) =      0.43
```

```
****************************************************************************
  FLOW PROCESS FROM NODE   2032.00 TO NODE   2039.00 IS CODE =  51
----------------------------------------------------------------------------
  >>>>>COMPUTE TRAPEZOIDAL CHANNEL FLOW<<<<<
  >>>>>TRAVELTIME THRU SUBAREA (EXISTING ELEMENT)<<<<<
============================================================================
  ELEVATION DATA: UPSTREAM(FEET) =    740.00  DOWNSTREAM(FEET) =    690.00
  CHANNEL LENGTH THRU SUBAREA(FEET) =   760.00   CHANNEL SLOPE =  0.0658
  CHANNEL BASE(FEET) =    3.00   "Z" FACTOR =   2.000
  MANNING'S FACTOR = 0.015   MAXIMUM DEPTH(FEET) =  10.00
   100 YEAR RAINFALL INTENSITY(INCH/HOUR) =  5.153
  *USER SPECIFIED(SUBAREA):
  USER-SPECIFIED RUNOFF COEFFICIENT = .4100
  S.C.S. CURVE NUMBER (AMC II) =   0
  TRAVEL TIME COMPUTED USING ESTIMATED FLOW(CFS) =       3.23
  TRAVEL TIME THRU SUBAREA BASED ON VELOCITY(FEET/SEC.) =   6.64
  AVERAGE FLOW DEPTH(FEET) =   0.15   TRAVEL TIME(MIN.) =   1.91
  Tc(MIN.) =   10.73
  SUBAREA AREA(ACRES) =     2.64       SUBAREA RUNOFF(CFS) =    5.58
  AREA-AVERAGE RUNOFF COEFFICIENT =  0.410
  TOTAL AREA(ACRES) =        2.8         PEAK FLOW RATE(CFS) =       5.96

  END OF SUBAREA CHANNEL FLOW HYDRAULICS:
  DEPTH(FEET) =  0.21   FLOW VELOCITY(FEET/SEC.) =   8.26
  LONGEST FLOWPATH FROM NODE   2031.00 TO NODE   2039.00 =     860.00 FEET.

****************************************************************************
  FLOW PROCESS FROM NODE   2039.00 TO NODE   2039.00 IS CODE =  10
----------------------------------------------------------------------------
  >>>>>MAIN-STREAM MEMORY COPIED ONTO MEMORY BANK # 2 <<<<<
============================================================================

****************************************************************************
  FLOW PROCESS FROM NODE   2034.00 TO NODE   2035.00 IS CODE =  21
----------------------------------------------------------------------------
  >>>>>RATIONAL METHOD INITIAL SUBAREA ANALYSIS<<<<<
============================================================================
  *USER SPECIFIED(SUBAREA):
  USER-SPECIFIED RUNOFF COEFFICIENT = .4100
  S.C.S. CURVE NUMBER (AMC II) =   0
  INITIAL SUBAREA FLOW-LENGTH(FEET) =    50.00
  UPSTREAM ELEVATION(FEET) =    745.00
  DOWNSTREAM ELEVATION(FEET) =    744.50
  ELEVATION DIFFERENCE(FEET) =      0.50
  SUBAREA OVERLAND TIME OF FLOW(MIN.) =    8.782
   100 YEAR RAINFALL INTENSITY(INCH/HOUR) =  5.863
  SUBAREA RUNOFF(CFS) =      0.24
  TOTAL AREA(ACRES) =      0.10   TOTAL RUNOFF(CFS) =      0.24

****************************************************************************
  FLOW PROCESS FROM NODE   2035.00 TO NODE   2038.00 IS CODE =  51
----------------------------------------------------------------------------
  >>>>>COMPUTE TRAPEZOIDAL CHANNEL FLOW<<<<<
  >>>>>TRAVELTIME THRU SUBAREA (EXISTING ELEMENT)<<<<<
============================================================================
  ELEVATION DATA: UPSTREAM(FEET) =    744.50  DOWNSTREAM(FEET) =    706.00
  CHANNEL LENGTH THRU SUBAREA(FEET) =   490.00   CHANNEL SLOPE =  0.0786
  CHANNEL BASE(FEET) =    3.00   "Z" FACTOR =   2.000
  MANNING'S FACTOR = 0.030   MAXIMUM DEPTH(FEET) =  10.00
   100 YEAR RAINFALL INTENSITY(INCH/HOUR) =  5.006
  *USER SPECIFIED(SUBAREA):
  USER-SPECIFIED RUNOFF COEFFICIENT = .4100
  S.C.S. CURVE NUMBER (AMC II) =   0
```

```
  TRAVEL TIME COMPUTED USING ESTIMATED FLOW(CFS) =       1.38
  TRAVEL TIME THRU SUBAREA BASED ON VELOCITY(FEET/SEC.) =   3.35
  AVERAGE FLOW DEPTH(FEET) =   0.13   TRAVEL TIME(MIN.) =   2.44
  Tc(MIN.) =   11.22
  SUBAREA AREA(ACRES) =     1.11       SUBAREA RUNOFF(CFS) =    2.28
  AREA-AVERAGE RUNOFF COEFFICIENT =  0.410
  TOTAL AREA(ACRES) =        1.2         PEAK FLOW RATE(CFS) =       2.48

  END OF SUBAREA CHANNEL FLOW HYDRAULICS:
  DEPTH(FEET) =  0.18   FLOW VELOCITY(FEET/SEC.) =   4.10
  LONGEST FLOWPATH FROM NODE   2034.00 TO NODE   2038.00 =     540.00 FEET.

****************************************************************************
  FLOW PROCESS FROM NODE   2038.00 TO NODE   2038.00 IS CODE =   1
----------------------------------------------------------------------------
  >>>>>DESIGNATE INDEPENDENT STREAM FOR CONFLUENCE<<<<<
============================================================================
  TOTAL NUMBER OF STREAMS =  2
  CONFLUENCE VALUES USED FOR INDEPENDENT STREAM  1 ARE:
  TIME OF CONCENTRATION(MIN.) =   11.22
  RAINFALL INTENSITY(INCH/HR) =   5.01
  TOTAL STREAM AREA(ACRES) =     1.21
  PEAK FLOW RATE(CFS) AT CONFLUENCE =      2.48

****************************************************************************
  FLOW PROCESS FROM NODE   2036.00 TO NODE   2037.00 IS CODE =  21
----------------------------------------------------------------------------
  >>>>>RATIONAL METHOD INITIAL SUBAREA ANALYSIS<<<<<
============================================================================
  *USER SPECIFIED(SUBAREA):
  USER-SPECIFIED RUNOFF COEFFICIENT = .4100
  S.C.S. CURVE NUMBER (AMC II) =   0
  INITIAL SUBAREA FLOW-LENGTH(FEET) =    60.00
  UPSTREAM ELEVATION(FEET) =    760.00
  DOWNSTREAM ELEVATION(FEET) =    754.00
  ELEVATION DIFFERENCE(FEET) =      6.00
  SUBAREA OVERLAND TIME OF FLOW(MIN.) =    4.466
  WARNING: THE MAXIMUM OVERLAND FLOW SLOPE, 10.%, IS USED IN Tc CALCULATION!
   100 YEAR RAINFALL INTENSITY(INCH/HOUR) =  8.431
  NOTE: RAINFALL INTENSITY IS BASED ON Tc = 5-MINUTE.
  SUBAREA RUNOFF(CFS) =      0.35
  TOTAL AREA(ACRES) =      0.10   TOTAL RUNOFF(CFS) =      0.35

****************************************************************************
  FLOW PROCESS FROM NODE   2037.00 TO NODE   2038.00 IS CODE =  51
----------------------------------------------------------------------------
  >>>>>COMPUTE TRAPEZOIDAL CHANNEL FLOW<<<<<
  >>>>>TRAVELTIME THRU SUBAREA (EXISTING ELEMENT)<<<<<
============================================================================
  ELEVATION DATA: UPSTREAM(FEET) =    754.00  DOWNSTREAM(FEET) =    706.00
  CHANNEL LENGTH THRU SUBAREA(FEET) =   360.00   CHANNEL SLOPE =  0.1333
  CHANNEL BASE(FEET) =    3.00   "Z" FACTOR =   2.000
  MANNING'S FACTOR = 0.030   MAXIMUM DEPTH(FEET) =  10.00
   100 YEAR RAINFALL INTENSITY(INCH/HOUR) =  7.867
  *USER SPECIFIED(SUBAREA):
  USER-SPECIFIED RUNOFF COEFFICIENT = .4100
  S.C.S. CURVE NUMBER (AMC II) =   0
  TRAVEL TIME COMPUTED USING ESTIMATED FLOW(CFS) =       3.57
  TRAVEL TIME THRU SUBAREA BASED ON VELOCITY(FEET/SEC.) =   5.45
  AVERAGE FLOW DEPTH(FEET) =   0.19   TRAVEL TIME(MIN.) =   1.10
  Tc(MIN.) =    5.57
  SUBAREA AREA(ACRES) =     1.99       SUBAREA RUNOFF(CFS) =    6.42
  AREA-AVERAGE RUNOFF COEFFICIENT =  0.410
```

```
  TOTAL AREA(ACRES) =        2.1         PEAK FLOW RATE(CFS) =       6.74

  END OF SUBAREA CHANNEL FLOW HYDRAULICS:
  DEPTH(FEET) =  0.28   FLOW VELOCITY(FEET/SEC.) =   6.83
  LONGEST FLOWPATH FROM NODE   2036.00 TO NODE   2038.00 =     420.00 FEET.

****************************************************************************
  FLOW PROCESS FROM NODE   2038.00 TO NODE   2038.00 IS CODE =   1
----------------------------------------------------------------------------
  >>>>>DESIGNATE INDEPENDENT STREAM FOR CONFLUENCE<<<<<
  >>>>>AND COMPUTE VARIOUS CONFLUENCED STREAM VALUES<<<<<
============================================================================
  TOTAL NUMBER OF STREAMS =  2
  CONFLUENCE VALUES USED FOR INDEPENDENT STREAM  2 ARE:
  TIME OF CONCENTRATION(MIN.) =    5.57
  RAINFALL INTENSITY(INCH/HR) =   7.87
  TOTAL STREAM AREA(ACRES) =     2.09
  PEAK FLOW RATE(CFS) AT CONFLUENCE =      6.74

  ** CONFLUENCE DATA **
  STREAM     RUNOFF       Tc      INTENSITY      AREA
  NUMBER      (CFS)     (MIN.)   (INCH/HOUR)    (ACRE)
      1        2.48    11.22        5.006          1.21
      2        6.74     5.57        7.867          2.09

  RAINFALL INTENSITY AND TIME OF CONCENTRATION RATIO
  CONFLUENCE FORMULA USED FOR  2 STREAMS.

  ** PEAK FLOW RATE TABLE **
  STREAM     RUNOFF      Tc      INTENSITY
  NUMBER      (CFS)    (MIN.)   (INCH/HOUR)
      1        7.97     5.57       7.867
      2        6.77    11.22       5.006

  COMPUTED CONFLUENCE ESTIMATES ARE AS FOLLOWS:
  PEAK FLOW RATE(CFS) =       7.97   Tc(MIN.) =    5.57
  TOTAL AREA(ACRES) =        3.3
  LONGEST FLOWPATH FROM NODE   2034.00 TO NODE   2038.00 =     540.00 FEET.

****************************************************************************
  FLOW PROCESS FROM NODE   2038.00 TO NODE   2039.00 IS CODE =  51
----------------------------------------------------------------------------
  >>>>>COMPUTE TRAPEZOIDAL CHANNEL FLOW<<<<<
  >>>>>TRAVELTIME THRU SUBAREA (EXISTING ELEMENT)<<<<<
============================================================================
  ELEVATION DATA: UPSTREAM(FEET) =    706.00  DOWNSTREAM(FEET) =    690.00
  CHANNEL LENGTH THRU SUBAREA(FEET) =   230.00   CHANNEL SLOPE =  0.0696
  CHANNEL BASE(FEET) =    3.00   "Z" FACTOR =   2.000
  MANNING'S FACTOR = 0.300   MAXIMUM DEPTH(FEET) =  10.00
   100 YEAR RAINFALL INTENSITY(INCH/HOUR) =  5.891
  *USER SPECIFIED(SUBAREA):
  USER-SPECIFIED RUNOFF COEFFICIENT = .4100
  S.C.S. CURVE NUMBER (AMC II) =   0
  TRAVEL TIME COMPUTED USING ESTIMATED FLOW(CFS) =      10.38
  TRAVEL TIME THRU SUBAREA BASED ON VELOCITY(FEET/SEC.) =   1.22
  AVERAGE FLOW DEPTH(FEET) =   1.45   TRAVEL TIME(MIN.) =   3.15
  Tc(MIN.) =    8.72
  SUBAREA AREA(ACRES) =     1.99       SUBAREA RUNOFF(CFS) =    4.81
  AREA-AVERAGE RUNOFF COEFFICIENT =  0.410
  TOTAL AREA(ACRES) =        5.3         PEAK FLOW RATE(CFS) =      12.78

  END OF SUBAREA CHANNEL FLOW HYDRAULICS:
  DEPTH(FEET) =  1.60   FLOW VELOCITY(FEET/SEC.) =   1.29
```

```
  LONGEST FLOWPATH FROM NODE   2034.00 TO NODE   2039.00 =     770.00 FEET.

****************************************************************************
  FLOW PROCESS FROM NODE   2039.00 TO NODE   2039.00 IS CODE =  11
----------------------------------------------------------------------------
  >>>>>CONFLUENCE MEMORY BANK # 2 WITH THE MAIN-STREAM MEMORY<<<<<
============================================================================

  ** MAIN STREAM CONFLUENCE DATA **
  STREAM     RUNOFF      Tc      INTENSITY     AREA
  NUMBER      (CFS)    (MIN.)   (INCH/HOUR)   (ACRE)
      1       12.78     8.72       5.891        5.29
  LONGEST FLOWPATH FROM NODE   2034.00 TO NODE   2039.00 =     770.00 FEET.

  ** MEMORY BANK #  2 CONFLUENCE DATA **
  STREAM     RUNOFF      Tc      INTENSITY     AREA
  NUMBER      (CFS)    (MIN.)   (INCH/HOUR)   (ACRE)
      1        5.96    10.73       5.153        2.82
  LONGEST FLOWPATH FROM NODE   2031.00 TO NODE   2039.00 =     860.00 FEET.

  ** PEAK FLOW RATE TABLE **
  STREAM    RUNOFF       Tc      INTENSITY
  NUMBER     (CFS)     (MIN.)   (INCH/HOUR)
      1      17.62       8.72        5.891
      2      17.14      10.73        5.153

  COMPUTED CONFLUENCE ESTIMATES ARE AS FOLLOWS:
  PEAK FLOW RATE(CFS) =      17.62   Tc(MIN.) =    8.72
  TOTAL AREA(ACRES) =        8.1

****************************************************************************
  FLOW PROCESS FROM NODE   2039.00 TO NODE   2039.00 IS CODE =  12
----------------------------------------------------------------------------
  >>>>>CLEAR MEMORY BANK # 2 <<<<<
============================================================================

****************************************************************************
  FLOW PROCESS FROM NODE   2039.00 TO NODE   2040.00 IS CODE =  51
----------------------------------------------------------------------------
  >>>>>COMPUTE TRAPEZOIDAL CHANNEL FLOW<<<<<
  >>>>>TRAVELTIME THRU SUBAREA (EXISTING ELEMENT)<<<<<
============================================================================
  ELEVATION DATA: UPSTREAM(FEET) =    690.00  DOWNSTREAM(FEET) =    680.00
  CHANNEL LENGTH THRU SUBAREA(FEET) =   205.00   CHANNEL SLOPE =  0.0488
  CHANNEL BASE(FEET) =    3.00   "Z" FACTOR =   2.000
  MANNING'S FACTOR = 0.030   MAXIMUM DEPTH(FEET) =  10.00
   100 YEAR RAINFALL INTENSITY(INCH/HOUR) =  5.681
  *USER SPECIFIED(SUBAREA):
  USER-SPECIFIED RUNOFF COEFFICIENT = .4100
  S.C.S. CURVE NUMBER (AMC II) =   0
  TRAVEL TIME COMPUTED USING ESTIMATED FLOW(CFS) =      19.65
  TRAVEL TIME THRU SUBAREA BASED ON VELOCITY(FEET/SEC.) =   6.78
  AVERAGE FLOW DEPTH(FEET) =   0.67   TRAVEL TIME(MIN.) =   0.50
  Tc(MIN.) =    9.22
  SUBAREA AREA(ACRES) =     1.74       SUBAREA RUNOFF(CFS) =    4.05
  AREA-AVERAGE RUNOFF COEFFICIENT =  0.410
  TOTAL AREA(ACRES) =        9.9         PEAK FLOW RATE(CFS) =      22.94

  END OF SUBAREA CHANNEL FLOW HYDRAULICS:
  DEPTH(FEET) =  0.73   FLOW VELOCITY(FEET/SEC.) =   7.05
  LONGEST FLOWPATH FROM NODE   2031.00 TO NODE   2040.00 =    1065.00 FEET.

****************************************************************************
```

```
  FLOW PROCESS FROM NODE   2040.00 TO NODE   2041.00 IS CODE =  51
----------------------------------------------------------------------
  >>>>>COMPUTE TRAPEZOIDAL CHANNEL FLOW<<<<<
  >>>>>TRAVELTIME THRU SUBAREA (EXISTING ELEMENT)<<<<<
======================================================================
  ELEVATION DATA: UPSTREAM(FEET) =    680.00  DOWNSTREAM(FEET) =    660.00
  CHANNEL LENGTH THRU SUBAREA(FEET) =   310.00   CHANNEL SLOPE =  0.0645
  CHANNEL BASE(FEET) =    3.00   "Z" FACTOR =   2.000
  MANNING'S FACTOR = 0.030   MAXIMUM DEPTH(FEET) =  10.00
   100 YEAR RAINFALL INTENSITY(INCH/HOUR) =  5.440
  *USER SPECIFIED(SUBAREA):
  USER-SPECIFIED RUNOFF COEFFICIENT = .4100
  S.C.S. CURVE NUMBER (AMC II) =   0
  TRAVEL TIME COMPUTED USING ESTIMATED FLOW(CFS) =      25.74
  TRAVEL TIME THRU SUBAREA BASED ON VELOCITY(FEET/SEC.) =   8.05
  AVERAGE FLOW DEPTH(FEET) =   0.72   TRAVEL TIME(MIN.) =   0.64
  Tc(MIN.) =    9.86
  SUBAREA AREA(ACRES) =     2.51       SUBAREA RUNOFF(CFS) =    5.60
  AREA-AVERAGE RUNOFF COEFFICIENT =  0.410
  TOTAL AREA(ACRES) =       12.4         PEAK FLOW RATE(CFS) =      27.57

  END OF SUBAREA CHANNEL FLOW HYDRAULICS:
  DEPTH(FEET) =  0.74   FLOW VELOCITY(FEET/SEC.) =   8.24
  LONGEST FLOWPATH FROM NODE   2031.00 TO NODE   2041.00 =    1375.00 FEET.

****************************************************************************
  FLOW PROCESS FROM NODE   2041.00 TO NODE   2041.00 IS CODE =  11
----------------------------------------------------------------------
  >>>>>CONFLUENCE MEMORY BANK # 1 WITH THE MAIN-STREAM MEMORY<<<<<
======================================================================

  ** MAIN STREAM CONFLUENCE DATA **
  STREAM     RUNOFF      Tc      INTENSITY     AREA
  NUMBER      (CFS)    (MIN.)   (INCH/HOUR)   (ACRE)
      1       27.57     9.86       5.440       12.36
  LONGEST FLOWPATH FROM NODE   2031.00 TO NODE   2041.00 =    1375.00 FEET.

  ** MEMORY BANK #  1 CONFLUENCE DATA **
  STREAM     RUNOFF      Tc      INTENSITY     AREA
  NUMBER      (CFS)    (MIN.)   (INCH/HOUR)   (ACRE)
      1       29.10    10.02       5.383        6.46
  LONGEST FLOWPATH FROM NODE   2001.00 TO NODE   2041.00 =    2300.00 FEET.

  ** PEAK FLOW RATE TABLE **
  STREAM    RUNOFF       Tc      INTENSITY
  NUMBER     (CFS)     (MIN.)   (INCH/HOUR)
      1      56.20       9.86        5.440
      2      56.38      10.02        5.383

  COMPUTED CONFLUENCE ESTIMATES ARE AS FOLLOWS:
  PEAK FLOW RATE(CFS) =      56.38   Tc(MIN.) =   10.02
  TOTAL AREA(ACRES) =       18.8

****************************************************************************
  FLOW PROCESS FROM NODE   2041.00 TO NODE   2041.00 IS CODE =  12
----------------------------------------------------------------------
  >>>>>CLEAR MEMORY BANK # 1 <<<<<
======================================================================

****************************************************************************
  FLOW PROCESS FROM NODE   2041.00 TO NODE   2042.00 IS CODE =  51
----------------------------------------------------------------------
  >>>>>COMPUTE TRAPEZOIDAL CHANNEL FLOW<<<<<
```

```
  >>>>>TRAVELTIME THRU SUBAREA (EXISTING ELEMENT)<<<<<
==============================================================================
  ELEVATION DATA: UPSTREAM(FEET) =    660.00  DOWNSTREAM(FEET) =    649.00
  CHANNEL LENGTH THRU SUBAREA(FEET) =   215.00   CHANNEL SLOPE =  0.0512
  CHANNEL BASE(FEET) =    3.00   "Z" FACTOR =   2.000
  MANNING'S FACTOR = 0.030   MAXIMUM DEPTH(FEET) =  10.00
   100 YEAR RAINFALL INTENSITY(INCH/HOUR) =  5.253
  *USER SPECIFIED(SUBAREA):
  USER-SPECIFIED RUNOFF COEFFICIENT = .4100
  S.C.S. CURVE NUMBER (AMC II) =   0
  TRAVEL TIME COMPUTED USING ESTIMATED FLOW(CFS) =      57.31
  TRAVEL TIME THRU SUBAREA BASED ON VELOCITY(FEET/SEC.) =   9.26
  AVERAGE FLOW DEPTH(FEET) =   1.16   TRAVEL TIME(MIN.) =   0.39
  Tc(MIN.) =   10.41
  SUBAREA AREA(ACRES) =     0.86       SUBAREA RUNOFF(CFS) =    1.85
  AREA-AVERAGE RUNOFF COEFFICIENT =  0.508
  TOTAL AREA(ACRES) =       19.7         PEAK FLOW RATE(CFS) =      56.38

  END OF SUBAREA CHANNEL FLOW HYDRAULICS:
  DEPTH(FEET) =  1.15   FLOW VELOCITY(FEET/SEC.) =   9.26
  LONGEST FLOWPATH FROM NODE   2001.00 TO NODE   2042.00 =    2515.00 FEET.

****************************************************************************
  FLOW PROCESS FROM NODE   2042.00 TO NODE   2047.00 IS CODE =  52
----------------------------------------------------------------------------
  >>>>>COMPUTE NATURAL VALLEY CHANNEL FLOW<<<<<
  >>>>>TRAVELTIME THRU SUBAREA<<<<<
==============================================================================
  ELEVATION DATA: UPSTREAM(FEET) =    649.00  DOWNSTREAM(FEET) =    640.00
  CHANNEL LENGTH THRU SUBAREA(FEET) =   200.00   CHANNEL SLOPE =  0.0450
  CHANNEL FLOW THRU SUBAREA(CFS) =      56.38
  FLOW VELOCITY(FEET/SEC) =   8.50 (PER LACFCD/RCFC&WCD HYDROLOGY MANUAL)
  TRAVEL TIME(MIN.) =   0.39   Tc(MIN.) =   10.80
  LONGEST FLOWPATH FROM NODE   2001.00 TO NODE   2047.00 =    2715.00 FEET.

****************************************************************************
  FLOW PROCESS FROM NODE   2047.00 TO NODE   2047.00 IS CODE =   1
----------------------------------------------------------------------------
  >>>>>DESIGNATE INDEPENDENT STREAM FOR CONFLUENCE<<<<<
==============================================================================
  TOTAL NUMBER OF STREAMS =  2
  CONFLUENCE VALUES USED FOR INDEPENDENT STREAM  1 ARE:
  TIME OF CONCENTRATION(MIN.) =   10.80
  RAINFALL INTENSITY(INCH/HR) =   5.13
  TOTAL STREAM AREA(ACRES) =    19.68
  PEAK FLOW RATE(CFS) AT CONFLUENCE =     56.38

****************************************************************************
  FLOW PROCESS FROM NODE   2043.00 TO NODE   2044.00 IS CODE =  21
----------------------------------------------------------------------------
  >>>>>RATIONAL METHOD INITIAL SUBAREA ANALYSIS<<<<<
==============================================================================
  *USER SPECIFIED(SUBAREA):
  USER-SPECIFIED RUNOFF COEFFICIENT = .7100
  S.C.S. CURVE NUMBER (AMC II) =   0
  INITIAL SUBAREA FLOW-LENGTH(FEET) =   130.00
  UPSTREAM ELEVATION(FEET) =    696.00
  DOWNSTREAM ELEVATION(FEET) =    686.00
  ELEVATION DIFFERENCE(FEET) =     10.00
  SUBAREA OVERLAND TIME OF FLOW(MIN.) =    3.556
  WARNING: INITIAL SUBAREA FLOW PATH LENGTH IS GREATER THAN
           THE MAXIMUM OVERLAND FLOW LENGTH =   100.00
           (Reference: Table 3-1B of Hydrology Manual)
```

```
          THE MAXIMUM OVERLAND FLOW LENGTH IS USED IN Tc CALCULATION!
   100 YEAR RAINFALL INTENSITY(INCH/HOUR) =  8.431
  NOTE: RAINFALL INTENSITY IS BASED ON Tc = 5-MINUTE.
  SUBAREA RUNOFF(CFS) =      1.02
  TOTAL AREA(ACRES) =      0.17   TOTAL RUNOFF(CFS) =      1.02

****************************************************************************
  FLOW PROCESS FROM NODE   2044.00 TO NODE   2045.00 IS CODE =  51
----------------------------------------------------------------------------
  >>>>>COMPUTE TRAPEZOIDAL CHANNEL FLOW<<<<<
  >>>>>TRAVELTIME THRU SUBAREA (EXISTING ELEMENT)<<<<<
============================================================================
  ELEVATION DATA: UPSTREAM(FEET) =    686.00  DOWNSTREAM(FEET) =    672.00
  CHANNEL LENGTH THRU SUBAREA(FEET) =   370.00   CHANNEL SLOPE =  0.0378
  CHANNEL BASE(FEET) =    3.00   "Z" FACTOR =   2.000
  MANNING'S FACTOR = 0.030   MAXIMUM DEPTH(FEET) =  10.00
   100 YEAR RAINFALL INTENSITY(INCH/HOUR) =  8.193
  *USER SPECIFIED(SUBAREA):
  USER-SPECIFIED RUNOFF COEFFICIENT = .7100
  S.C.S. CURVE NUMBER (AMC II) =   0
  TRAVEL TIME COMPUTED USING ESTIMATED FLOW(CFS) =       3.76
  TRAVEL TIME THRU SUBAREA BASED ON VELOCITY(FEET/SEC.) =   3.69
  AVERAGE FLOW DEPTH(FEET) =   0.29   TRAVEL TIME(MIN.) =   1.67
  Tc(MIN.) =    5.23
  SUBAREA AREA(ACRES) =     0.94       SUBAREA RUNOFF(CFS) =    5.47
  AREA-AVERAGE RUNOFF COEFFICIENT =  0.710
  TOTAL AREA(ACRES) =        1.1         PEAK FLOW RATE(CFS) =       6.46

  END OF SUBAREA CHANNEL FLOW HYDRAULICS:
  DEPTH(FEET) =  0.39   FLOW VELOCITY(FEET/SEC.) =   4.43
  LONGEST FLOWPATH FROM NODE   2043.00 TO NODE   2045.00 =     500.00 FEET.

****************************************************************************
  FLOW PROCESS FROM NODE   2045.00 TO NODE   2046.00 IS CODE =  51
----------------------------------------------------------------------------
  >>>>>COMPUTE TRAPEZOIDAL CHANNEL FLOW<<<<<
  >>>>>TRAVELTIME THRU SUBAREA (EXISTING ELEMENT)<<<<<
============================================================================
  ELEVATION DATA: UPSTREAM(FEET) =    672.00  DOWNSTREAM(FEET) =    649.00
  CHANNEL LENGTH THRU SUBAREA(FEET) =   425.00   CHANNEL SLOPE =  0.0541
  CHANNEL BASE(FEET) =    3.00   "Z" FACTOR =   2.000
  MANNING'S FACTOR = 0.030   MAXIMUM DEPTH(FEET) =  10.00
   100 YEAR RAINFALL INTENSITY(INCH/HOUR) =  7.192
  *USER SPECIFIED(SUBAREA):
  USER-SPECIFIED RUNOFF COEFFICIENT = .7100
  S.C.S. CURVE NUMBER (AMC II) =   0
  TRAVEL TIME COMPUTED USING ESTIMATED FLOW(CFS) =      12.06
  TRAVEL TIME THRU SUBAREA BASED ON VELOCITY(FEET/SEC.) =   6.05
  AVERAGE FLOW DEPTH(FEET) =   0.50   TRAVEL TIME(MIN.) =   1.17
  Tc(MIN.) =    6.40
  SUBAREA AREA(ACRES) =     2.19       SUBAREA RUNOFF(CFS) =   11.18
  AREA-AVERAGE RUNOFF COEFFICIENT =  0.710
  TOTAL AREA(ACRES) =        3.3         PEAK FLOW RATE(CFS) =      16.85

  END OF SUBAREA CHANNEL FLOW HYDRAULICS:
  DEPTH(FEET) =  0.60   FLOW VELOCITY(FEET/SEC.) =   6.69
  LONGEST FLOWPATH FROM NODE   2043.00 TO NODE   2046.00 =     925.00 FEET.

****************************************************************************
  FLOW PROCESS FROM NODE   2046.00 TO NODE   2047.00 IS CODE =  51
----------------------------------------------------------------------------
  >>>>>COMPUTE TRAPEZOIDAL CHANNEL FLOW<<<<<
  >>>>>TRAVELTIME THRU SUBAREA (EXISTING ELEMENT)<<<<<
```

```
==============================================================================
  ELEVATION DATA: UPSTREAM(FEET) =    649.00  DOWNSTREAM(FEET) =    640.00
  CHANNEL LENGTH THRU SUBAREA(FEET) =   310.00   CHANNEL SLOPE =  0.0290
  CHANNEL BASE(FEET) =    3.00   "Z" FACTOR =   2.000
  MANNING'S FACTOR = 0.030   MAXIMUM DEPTH(FEET) =  10.00
   100 YEAR RAINFALL INTENSITY(INCH/HOUR) =  6.582
  *USER SPECIFIED(SUBAREA):
  USER-SPECIFIED RUNOFF COEFFICIENT = .4100
  S.C.S. CURVE NUMBER (AMC II) =   0
  TRAVEL TIME COMPUTED USING ESTIMATED FLOW(CFS) =      18.04
  TRAVEL TIME THRU SUBAREA BASED ON VELOCITY(FEET/SEC.) =   5.49
  AVERAGE FLOW DEPTH(FEET) =   0.74   TRAVEL TIME(MIN.) =   0.94
  Tc(MIN.) =    7.34
  SUBAREA AREA(ACRES) =     0.88       SUBAREA RUNOFF(CFS) =    2.37
  AREA-AVERAGE RUNOFF COEFFICIENT =  0.647
  TOTAL AREA(ACRES) =        4.2         PEAK FLOW RATE(CFS) =      17.80

  END OF SUBAREA CHANNEL FLOW HYDRAULICS:
  DEPTH(FEET) =  0.73   FLOW VELOCITY(FEET/SEC.) =   5.47
  LONGEST FLOWPATH FROM NODE   2043.00 TO NODE   2047.00 =    1235.00 FEET.

****************************************************************************
  FLOW PROCESS FROM NODE   2047.00 TO NODE   2047.00 IS CODE =   1
----------------------------------------------------------------------------
  >>>>>DESIGNATE INDEPENDENT STREAM FOR CONFLUENCE<<<<<
  >>>>>AND COMPUTE VARIOUS CONFLUENCED STREAM VALUES<<<<<
==============================================================================
  TOTAL NUMBER OF STREAMS =  2
  CONFLUENCE VALUES USED FOR INDEPENDENT STREAM  2 ARE:
  TIME OF CONCENTRATION(MIN.) =    7.34
  RAINFALL INTENSITY(INCH/HR) =   6.58
  TOTAL STREAM AREA(ACRES) =     4.18
  PEAK FLOW RATE(CFS) AT CONFLUENCE =     17.80

  ** CONFLUENCE DATA **
  STREAM     RUNOFF       Tc      INTENSITY      AREA
  NUMBER      (CFS)     (MIN.)   (INCH/HOUR)    (ACRE)
      1       56.38    10.80        5.129         19.68
      2       17.80     7.34        6.582          4.18

  RAINFALL INTENSITY AND TIME OF CONCENTRATION RATIO
  CONFLUENCE FORMULA USED FOR  2 STREAMS.

  ** PEAK FLOW RATE TABLE **
  STREAM     RUNOFF      Tc      INTENSITY
  NUMBER      (CFS)    (MIN.)   (INCH/HOUR)
      1       56.10     7.34       6.582
      2       70.25    10.80       5.129

  COMPUTED CONFLUENCE ESTIMATES ARE AS FOLLOWS:
  PEAK FLOW RATE(CFS) =      70.25   Tc(MIN.) =   10.80
  TOTAL AREA(ACRES) =       23.9
  LONGEST FLOWPATH FROM NODE   2001.00 TO NODE   2047.00 =    2715.00 FEET.

****************************************************************************
  FLOW PROCESS FROM NODE   2047.00 TO NODE   2058.00 IS CODE =  52
----------------------------------------------------------------------------
  >>>>>COMPUTE NATURAL VALLEY CHANNEL FLOW<<<<<
  >>>>>TRAVELTIME THRU SUBAREA<<<<<
==============================================================================
  ELEVATION DATA: UPSTREAM(FEET) =    640.00  DOWNSTREAM(FEET) =    634.00
  CHANNEL LENGTH THRU SUBAREA(FEET) =   125.00   CHANNEL SLOPE =  0.0480
  CHANNEL FLOW THRU SUBAREA(CFS) =      70.25
```

```
  FLOW VELOCITY(FEET/SEC) =   9.36 (PER LACFCD/RCFC&WCD HYDROLOGY MANUAL)
  TRAVEL TIME(MIN.) =   0.22   Tc(MIN.) =   11.03
  LONGEST FLOWPATH FROM NODE   2001.00 TO NODE   2058.00 =    2840.00 FEET.

****************************************************************************
  FLOW PROCESS FROM NODE   2058.00 TO NODE   2058.00 IS CODE =   1
----------------------------------------------------------------------------
  >>>>>DESIGNATE INDEPENDENT STREAM FOR CONFLUENCE<<<<<
============================================================================
  TOTAL NUMBER OF STREAMS =  4
  CONFLUENCE VALUES USED FOR INDEPENDENT STREAM  1 ARE:
  TIME OF CONCENTRATION(MIN.) =   11.03
  RAINFALL INTENSITY(INCH/HR) =   5.06
  TOTAL STREAM AREA(ACRES) =    23.86
  PEAK FLOW RATE(CFS) AT CONFLUENCE =     70.25

****************************************************************************
  FLOW PROCESS FROM NODE   2048.00 TO NODE   2049.00 IS CODE =  21
----------------------------------------------------------------------------
  >>>>>RATIONAL METHOD INITIAL SUBAREA ANALYSIS<<<<<
============================================================================
  *USER SPECIFIED(SUBAREA):
  USER-SPECIFIED RUNOFF COEFFICIENT = .4100
  S.C.S. CURVE NUMBER (AMC II) =   0
  INITIAL SUBAREA FLOW-LENGTH(FEET) =    90.00
  UPSTREAM ELEVATION(FEET) =    748.00
  DOWNSTREAM ELEVATION(FEET) =    742.00
  ELEVATION DIFFERENCE(FEET) =      6.00
  SUBAREA OVERLAND TIME OF FLOW(MIN.) =    6.261
   100 YEAR RAINFALL INTENSITY(INCH/HOUR) =  7.293
  SUBAREA RUNOFF(CFS) =      0.33
  TOTAL AREA(ACRES) =      0.11   TOTAL RUNOFF(CFS) =      0.33

****************************************************************************
  FLOW PROCESS FROM NODE   2049.00 TO NODE   2050.00 IS CODE =  51
----------------------------------------------------------------------------
  >>>>>COMPUTE TRAPEZOIDAL CHANNEL FLOW<<<<<
  >>>>>TRAVELTIME THRU SUBAREA (EXISTING ELEMENT)<<<<<
============================================================================
  ELEVATION DATA: UPSTREAM(FEET) =    742.00  DOWNSTREAM(FEET) =    694.00
  CHANNEL LENGTH THRU SUBAREA(FEET) =   380.00   CHANNEL SLOPE =  0.1263
  CHANNEL BASE(FEET) =    3.00   "Z" FACTOR =   2.000
  MANNING'S FACTOR = 0.030   MAXIMUM DEPTH(FEET) =  10.00
   100 YEAR RAINFALL INTENSITY(INCH/HOUR) =  6.309
  *USER SPECIFIED(SUBAREA):
  USER-SPECIFIED RUNOFF COEFFICIENT = .4100
  S.C.S. CURVE NUMBER (AMC II) =   0
  TRAVEL TIME COMPUTED USING ESTIMATED FLOW(CFS) =       1.52
  TRAVEL TIME THRU SUBAREA BASED ON VELOCITY(FEET/SEC.) =   4.01
  AVERAGE FLOW DEPTH(FEET) =   0.12   TRAVEL TIME(MIN.) =   1.58
  Tc(MIN.) =    7.84
  SUBAREA AREA(ACRES) =     0.92       SUBAREA RUNOFF(CFS) =    2.38
  AREA-AVERAGE RUNOFF COEFFICIENT =  0.410
  TOTAL AREA(ACRES) =        1.0         PEAK FLOW RATE(CFS) =       2.66

  END OF SUBAREA CHANNEL FLOW HYDRAULICS:
  DEPTH(FEET) =  0.16   FLOW VELOCITY(FEET/SEC.) =   4.91
  LONGEST FLOWPATH FROM NODE   2048.00 TO NODE   2050.00 =     470.00 FEET.

****************************************************************************
  FLOW PROCESS FROM NODE   2050.00 TO NODE   2058.00 IS CODE =  51
----------------------------------------------------------------------------
  >>>>>COMPUTE TRAPEZOIDAL CHANNEL FLOW<<<<<
```

```
  >>>>>TRAVELTIME THRU SUBAREA (EXISTING ELEMENT)<<<<<
==============================================================================
  ELEVATION DATA: UPSTREAM(FEET) =    694.00  DOWNSTREAM(FEET) =    634.00
  CHANNEL LENGTH THRU SUBAREA(FEET) =   860.00   CHANNEL SLOPE =  0.0698
  CHANNEL BASE(FEET) =    3.00   "Z" FACTOR =   2.000
  MANNING'S FACTOR = 0.030   MAXIMUM DEPTH(FEET) =  10.00
   100 YEAR RAINFALL INTENSITY(INCH/HOUR) =  5.088
  *USER SPECIFIED(SUBAREA):
  USER-SPECIFIED RUNOFF COEFFICIENT = .4100
  S.C.S. CURVE NUMBER (AMC II) =   0
  TRAVEL TIME COMPUTED USING ESTIMATED FLOW(CFS) =       4.02
  TRAVEL TIME THRU SUBAREA BASED ON VELOCITY(FEET/SEC.) =   4.62
  AVERAGE FLOW DEPTH(FEET) =   0.25   TRAVEL TIME(MIN.) =   3.10
  Tc(MIN.) =   10.94
  SUBAREA AREA(ACRES) =     1.30       SUBAREA RUNOFF(CFS) =    2.71
  AREA-AVERAGE RUNOFF COEFFICIENT =  0.410
  TOTAL AREA(ACRES) =        2.3         PEAK FLOW RATE(CFS) =       4.86

  END OF SUBAREA CHANNEL FLOW HYDRAULICS:
  DEPTH(FEET) =  0.28   FLOW VELOCITY(FEET/SEC.) =   4.93
  LONGEST FLOWPATH FROM NODE   2048.00 TO NODE   2058.00 =    1330.00 FEET.

****************************************************************************
  FLOW PROCESS FROM NODE   2058.00 TO NODE   2058.00 IS CODE =   1
----------------------------------------------------------------------------
  >>>>>DESIGNATE INDEPENDENT STREAM FOR CONFLUENCE<<<<<
==============================================================================
  TOTAL NUMBER OF STREAMS =  4
  CONFLUENCE VALUES USED FOR INDEPENDENT STREAM  2 ARE:
  TIME OF CONCENTRATION(MIN.) =   10.94
  RAINFALL INTENSITY(INCH/HR) =   5.09
  TOTAL STREAM AREA(ACRES) =     2.33
  PEAK FLOW RATE(CFS) AT CONFLUENCE =      4.86

****************************************************************************
  FLOW PROCESS FROM NODE   2051.00 TO NODE   2052.00 IS CODE =  21
----------------------------------------------------------------------------
  >>>>>RATIONAL METHOD INITIAL SUBAREA ANALYSIS<<<<<
==============================================================================
  *USER SPECIFIED(SUBAREA):
  USER-SPECIFIED RUNOFF COEFFICIENT = .4100
  S.C.S. CURVE NUMBER (AMC II) =   0
  INITIAL SUBAREA FLOW-LENGTH(FEET) =    70.00
  UPSTREAM ELEVATION(FEET) =    638.00
  DOWNSTREAM ELEVATION(FEET) =    637.50
  ELEVATION DIFFERENCE(FEET) =      0.50
  SUBAREA OVERLAND TIME OF FLOW(MIN.) =   10.437
  WARNING: INITIAL SUBAREA FLOW PATH LENGTH IS GREATER THAN
           THE MAXIMUM OVERLAND FLOW LENGTH =    56.43
           (Reference: Table 3-1B of Hydrology Manual)
           THE MAXIMUM OVERLAND FLOW LENGTH IS USED IN Tc CALCULATION!
   100 YEAR RAINFALL INTENSITY(INCH/HOUR) =  5.245
  SUBAREA RUNOFF(CFS) =      0.22
  TOTAL AREA(ACRES) =      0.10   TOTAL RUNOFF(CFS) =      0.22

****************************************************************************
  FLOW PROCESS FROM NODE   2052.00 TO NODE   2053.00 IS CODE =  51
----------------------------------------------------------------------------
  >>>>>COMPUTE TRAPEZOIDAL CHANNEL FLOW<<<<<
  >>>>>TRAVELTIME THRU SUBAREA (EXISTING ELEMENT)<<<<<
==============================================================================
  ELEVATION DATA: UPSTREAM(FEET) =    637.50  DOWNSTREAM(FEET) =    637.10
  CHANNEL LENGTH THRU SUBAREA(FEET) =    40.00   CHANNEL SLOPE =  0.0100
```

```
  CHANNEL BASE(FEET) =    3.00   "Z" FACTOR =   2.000
  MANNING'S FACTOR = 0.030   MAXIMUM DEPTH(FEET) =  10.00
   100 YEAR RAINFALL INTENSITY(INCH/HOUR) =  5.145
  *USER SPECIFIED(SUBAREA):
  USER-SPECIFIED RUNOFF COEFFICIENT = .4100
  S.C.S. CURVE NUMBER (AMC II) =   0
  TRAVEL TIME COMPUTED USING ESTIMATED FLOW(CFS) =       2.57
  TRAVEL TIME THRU SUBAREA BASED ON VELOCITY(FEET/SEC.) =   2.10
  AVERAGE FLOW DEPTH(FEET) =   0.33   TRAVEL TIME(MIN.) =   0.32
  Tc(MIN.) =   10.75
  SUBAREA AREA(ACRES) =     2.23       SUBAREA RUNOFF(CFS) =    4.70
  AREA-AVERAGE RUNOFF COEFFICIENT =  0.410
  TOTAL AREA(ACRES) =        2.3         PEAK FLOW RATE(CFS) =       4.91

  END OF SUBAREA CHANNEL FLOW HYDRAULICS:
  DEPTH(FEET) =  0.48   FLOW VELOCITY(FEET/SEC.) =   2.56
  LONGEST FLOWPATH FROM NODE   2051.00 TO NODE   2053.00 =     110.00 FEET.

****************************************************************************
  FLOW PROCESS FROM NODE   2053.00 TO NODE   2058.00 IS CODE =  51
----------------------------------------------------------------------------
  >>>>>COMPUTE TRAPEZOIDAL CHANNEL FLOW<<<<<
  >>>>>TRAVELTIME THRU SUBAREA (EXISTING ELEMENT)<<<<<
============================================================================
  ELEVATION DATA: UPSTREAM(FEET) =    637.10  DOWNSTREAM(FEET) =    634.00
  CHANNEL LENGTH THRU SUBAREA(FEET) =   250.00   CHANNEL SLOPE =  0.0124
  CHANNEL BASE(FEET) =    3.00   "Z" FACTOR =   2.000
  MANNING'S FACTOR = 0.030   MAXIMUM DEPTH(FEET) =  10.00
   100 YEAR RAINFALL INTENSITY(INCH/HOUR) =  4.780
  *USER SPECIFIED(SUBAREA):
  USER-SPECIFIED RUNOFF COEFFICIENT = .4100
  S.C.S. CURVE NUMBER (AMC II) =   0
  TRAVEL TIME COMPUTED USING ESTIMATED FLOW(CFS) =       8.08
  TRAVEL TIME THRU SUBAREA BASED ON VELOCITY(FEET/SEC.) =   3.21
  AVERAGE FLOW DEPTH(FEET) =   0.60   TRAVEL TIME(MIN.) =   1.30
  Tc(MIN.) =   12.05
  SUBAREA AREA(ACRES) =     3.23       SUBAREA RUNOFF(CFS) =    6.33
  AREA-AVERAGE RUNOFF COEFFICIENT =  0.410
  TOTAL AREA(ACRES) =        5.6         PEAK FLOW RATE(CFS) =      10.90

  END OF SUBAREA CHANNEL FLOW HYDRAULICS:
  DEPTH(FEET) =  0.70   FLOW VELOCITY(FEET/SEC.) =   3.51
  LONGEST FLOWPATH FROM NODE   2051.00 TO NODE   2058.00 =     360.00 FEET.

****************************************************************************
  FLOW PROCESS FROM NODE   2058.00 TO NODE   2058.00 IS CODE =   1
----------------------------------------------------------------------------
  >>>>>DESIGNATE INDEPENDENT STREAM FOR CONFLUENCE<<<<<
============================================================================
  TOTAL NUMBER OF STREAMS =  4
  CONFLUENCE VALUES USED FOR INDEPENDENT STREAM  3 ARE:
  TIME OF CONCENTRATION(MIN.) =   12.05
  RAINFALL INTENSITY(INCH/HR) =   4.78
  TOTAL STREAM AREA(ACRES) =     5.56
  PEAK FLOW RATE(CFS) AT CONFLUENCE =     10.90

****************************************************************************
  FLOW PROCESS FROM NODE   2054.00 TO NODE   2055.00 IS CODE =  21
----------------------------------------------------------------------------
  >>>>>RATIONAL METHOD INITIAL SUBAREA ANALYSIS<<<<<
============================================================================
  *USER SPECIFIED(SUBAREA):
  USER-SPECIFIED RUNOFF COEFFICIENT = .4100
```

```
  S.C.S. CURVE NUMBER (AMC II) =   0
  INITIAL SUBAREA FLOW-LENGTH(FEET) =   100.00
  UPSTREAM ELEVATION(FEET) =    760.00
  DOWNSTREAM ELEVATION(FEET) =    750.00
  ELEVATION DIFFERENCE(FEET) =     10.00
  SUBAREA OVERLAND TIME OF FLOW(MIN.) =    5.765
  WARNING: THE MAXIMUM OVERLAND FLOW SLOPE, 10.%, IS USED IN Tc CALCULATION!
   100 YEAR RAINFALL INTENSITY(INCH/HOUR) =  7.691
  SUBAREA RUNOFF(CFS) =      0.32
  TOTAL AREA(ACRES) =      0.10   TOTAL RUNOFF(CFS) =      0.32

****************************************************************************
  FLOW PROCESS FROM NODE   2055.00 TO NODE   2056.00 IS CODE =  51
----------------------------------------------------------------------------
  >>>>>COMPUTE TRAPEZOIDAL CHANNEL FLOW<<<<<
  >>>>>TRAVELTIME THRU SUBAREA (EXISTING ELEMENT)<<<<<
============================================================================
  ELEVATION DATA: UPSTREAM(FEET) =    750.00  DOWNSTREAM(FEET) =    684.00
  CHANNEL LENGTH THRU SUBAREA(FEET) =   500.00   CHANNEL SLOPE =  0.1320
  CHANNEL BASE(FEET) =    3.00   "Z" FACTOR =   2.000
  MANNING'S FACTOR = 0.030   MAXIMUM DEPTH(FEET) =  10.00
   100 YEAR RAINFALL INTENSITY(INCH/HOUR) =  6.448
  *USER SPECIFIED(SUBAREA):
  USER-SPECIFIED RUNOFF COEFFICIENT = .4100
  S.C.S. CURVE NUMBER (AMC II) =   0
  TRAVEL TIME COMPUTED USING ESTIMATED FLOW(CFS) =       2.24
  TRAVEL TIME THRU SUBAREA BASED ON VELOCITY(FEET/SEC.) =   4.60
  AVERAGE FLOW DEPTH(FEET) =   0.15   TRAVEL TIME(MIN.) =   1.81
  Tc(MIN.) =    7.58
  SUBAREA AREA(ACRES) =     1.44       SUBAREA RUNOFF(CFS) =    3.81
  AREA-AVERAGE RUNOFF COEFFICIENT =  0.410
  TOTAL AREA(ACRES) =        1.5         PEAK FLOW RATE(CFS) =       4.07

  END OF SUBAREA CHANNEL FLOW HYDRAULICS:
  DEPTH(FEET) =  0.21   FLOW VELOCITY(FEET/SEC.) =   5.70
  LONGEST FLOWPATH FROM NODE   2054.00 TO NODE   2056.00 =     600.00 FEET.

****************************************************************************
  FLOW PROCESS FROM NODE   2056.00 TO NODE   2057.00 IS CODE =  51
----------------------------------------------------------------------------
  >>>>>COMPUTE TRAPEZOIDAL CHANNEL FLOW<<<<<
  >>>>>TRAVELTIME THRU SUBAREA (EXISTING ELEMENT)<<<<<
============================================================================
  ELEVATION DATA: UPSTREAM(FEET) =    684.00  DOWNSTREAM(FEET) =    670.00
  CHANNEL LENGTH THRU SUBAREA(FEET) =   280.00   CHANNEL SLOPE =  0.0500
  CHANNEL BASE(FEET) =    3.00   "Z" FACTOR =   2.000
  MANNING'S FACTOR = 0.030   MAXIMUM DEPTH(FEET) =  10.00
   100 YEAR RAINFALL INTENSITY(INCH/HOUR) =  5.986
  *USER SPECIFIED(SUBAREA):
  USER-SPECIFIED RUNOFF COEFFICIENT = .4100
  S.C.S. CURVE NUMBER (AMC II) =   0
  TRAVEL TIME COMPUTED USING ESTIMATED FLOW(CFS) =       7.47
  TRAVEL TIME THRU SUBAREA BASED ON VELOCITY(FEET/SEC.) =   5.04
  AVERAGE FLOW DEPTH(FEET) =   0.39   TRAVEL TIME(MIN.) =   0.93
  Tc(MIN.) =    8.50
  SUBAREA AREA(ACRES) =     2.77       SUBAREA RUNOFF(CFS) =    6.80
  AREA-AVERAGE RUNOFF COEFFICIENT =  0.410
  TOTAL AREA(ACRES) =        4.3         PEAK FLOW RATE(CFS) =      10.58

  END OF SUBAREA CHANNEL FLOW HYDRAULICS:
  DEPTH(FEET) =  0.48   FLOW VELOCITY(FEET/SEC.) =   5.62
  LONGEST FLOWPATH FROM NODE   2054.00 TO NODE   2057.00 =     880.00 FEET.
```

```
****************************************************************************
  FLOW PROCESS FROM NODE   2057.00 TO NODE   2058.00 IS CODE =  51
----------------------------------------------------------------------------
  >>>>>COMPUTE TRAPEZOIDAL CHANNEL FLOW<<<<<
  >>>>>TRAVELTIME THRU SUBAREA (EXISTING ELEMENT)<<<<<
============================================================================
  ELEVATION DATA: UPSTREAM(FEET) =    670.00  DOWNSTREAM(FEET) =    634.00
  CHANNEL LENGTH THRU SUBAREA(FEET) =   760.00   CHANNEL SLOPE =  0.0474
  CHANNEL BASE(FEET) =    3.00   "Z" FACTOR =   2.000
  MANNING'S FACTOR = 0.030   MAXIMUM DEPTH(FEET) =  10.00
   100 YEAR RAINFALL INTENSITY(INCH/HOUR) =  5.177
  *USER SPECIFIED(SUBAREA):
  USER-SPECIFIED RUNOFF COEFFICIENT = .4100
  S.C.S. CURVE NUMBER (AMC II) =   0
  TRAVEL TIME COMPUTED USING ESTIMATED FLOW(CFS) =      12.97
  TRAVEL TIME THRU SUBAREA BASED ON VELOCITY(FEET/SEC.) =   5.90
  AVERAGE FLOW DEPTH(FEET) =   0.54   TRAVEL TIME(MIN.) =   2.15
  Tc(MIN.) =   10.65
  SUBAREA AREA(ACRES) =     2.25       SUBAREA RUNOFF(CFS) =    4.78
  AREA-AVERAGE RUNOFF COEFFICIENT =  0.410
  TOTAL AREA(ACRES) =        6.6         PEAK FLOW RATE(CFS) =      13.92

  END OF SUBAREA CHANNEL FLOW HYDRAULICS:
  DEPTH(FEET) =  0.56   FLOW VELOCITY(FEET/SEC.) =   6.04
  LONGEST FLOWPATH FROM NODE   2054.00 TO NODE   2058.00 =    1640.00 FEET.

****************************************************************************
  FLOW PROCESS FROM NODE   2058.00 TO NODE   2058.00 IS CODE =   1
----------------------------------------------------------------------------
  >>>>>DESIGNATE INDEPENDENT STREAM FOR CONFLUENCE<<<<<
  >>>>>AND COMPUTE VARIOUS CONFLUENCED STREAM VALUES<<<<<
============================================================================
  TOTAL NUMBER OF STREAMS =  4
  CONFLUENCE VALUES USED FOR INDEPENDENT STREAM  4 ARE:
  TIME OF CONCENTRATION(MIN.) =   10.65
  RAINFALL INTENSITY(INCH/HR) =   5.18
  TOTAL STREAM AREA(ACRES) =     6.56
  PEAK FLOW RATE(CFS) AT CONFLUENCE =     13.92

  ** CONFLUENCE DATA **
  STREAM     RUNOFF       Tc      INTENSITY      AREA
  NUMBER      (CFS)     (MIN.)   (INCH/HOUR)    (ACRE)
      1       70.25    11.03        5.062         23.86
      2        4.86    10.94        5.088          2.33
      3       10.90    12.05        4.780          5.56
      4       13.92    10.65        5.177          6.56

  RAINFALL INTENSITY AND TIME OF CONCENTRATION RATIO
  CONFLUENCE FORMULA USED FOR  4 STREAMS.

  ** PEAK FLOW RATE TABLE **
  STREAM     RUNOFF      Tc      INTENSITY
  NUMBER      (CFS)    (MIN.)   (INCH/HOUR)
      1       96.97    10.65       5.177
      2       98.33    10.94       5.088
      3       98.67    11.03       5.062
      4       94.65    12.05       4.780

  COMPUTED CONFLUENCE ESTIMATES ARE AS FOLLOWS:
  PEAK FLOW RATE(CFS) =      98.67   Tc(MIN.) =   11.03
  TOTAL AREA(ACRES) =       38.3
  LONGEST FLOWPATH FROM NODE   2001.00 TO NODE   2058.00 =    2840.00 FEET.
```

```
****************************************************************************
  FLOW PROCESS FROM NODE   2058.00 TO NODE   2076.00 IS CODE =  51
----------------------------------------------------------------------------
  >>>>>COMPUTE TRAPEZOIDAL CHANNEL FLOW<<<<<
  >>>>>TRAVELTIME THRU SUBAREA (EXISTING ELEMENT)<<<<<
============================================================================
  ELEVATION DATA: UPSTREAM(FEET) =    634.00  DOWNSTREAM(FEET) =    630.00
  CHANNEL LENGTH THRU SUBAREA(FEET) =   260.00   CHANNEL SLOPE =  0.0154
  CHANNEL BASE(FEET) =    3.00   "Z" FACTOR =   2.000
  MANNING'S FACTOR = 0.030   MAXIMUM DEPTH(FEET) =  10.00
   100 YEAR RAINFALL INTENSITY(INCH/HOUR) =  4.885
  *USER SPECIFIED(SUBAREA):
  USER-SPECIFIED RUNOFF COEFFICIENT = .4100
  S.C.S. CURVE NUMBER (AMC II) =   0
  TRAVEL TIME COMPUTED USING ESTIMATED FLOW(CFS) =      99.00
  TRAVEL TIME THRU SUBAREA BASED ON VELOCITY(FEET/SEC.) =   6.90
  AVERAGE FLOW DEPTH(FEET) =   2.03   TRAVEL TIME(MIN.) =   0.63
  Tc(MIN.) =   11.65
  SUBAREA AREA(ACRES) =     0.33       SUBAREA RUNOFF(CFS) =    0.66
  AREA-AVERAGE RUNOFF COEFFICIENT =  0.486
  TOTAL AREA(ACRES) =       38.6         PEAK FLOW RATE(CFS) =      98.67

  END OF SUBAREA CHANNEL FLOW HYDRAULICS:
  DEPTH(FEET) =  2.03   FLOW VELOCITY(FEET/SEC.) =   6.87
  LONGEST FLOWPATH FROM NODE   2001.00 TO NODE   2076.00 =    3100.00 FEET.

****************************************************************************
  FLOW PROCESS FROM NODE   2076.00 TO NODE   2076.00 IS CODE =  10
----------------------------------------------------------------------------
  >>>>>MAIN-STREAM MEMORY COPIED ONTO MEMORY BANK # 1 <<<<<
============================================================================

****************************************************************************
  FLOW PROCESS FROM NODE    257.00 TO NODE    257.00 IS CODE =   7
----------------------------------------------------------------------------
  >>>>>USER SPECIFIED HYDROLOGY INFORMATION AT NODE<<<<<
============================================================================
  USER-SPECIFIED VALUES ARE AS FOLLOWS:
  TC(MIN) =   9.39   RAIN INTENSITY(INCH/HOUR) =  5.62
  TOTAL AREA(ACRES) =    69.57   TOTAL RUNOFF(CFS) =    200.43

****************************************************************************
  FLOW PROCESS FROM NODE    257.00 TO NODE   2062.00 IS CODE =  52
----------------------------------------------------------------------------
  >>>>>COMPUTE NATURAL VALLEY CHANNEL FLOW<<<<<
  >>>>>TRAVELTIME THRU SUBAREA<<<<<
============================================================================
  ELEVATION DATA: UPSTREAM(FEET) =    672.00  DOWNSTREAM(FEET) =    654.00
  CHANNEL LENGTH THRU SUBAREA(FEET) =   200.00   CHANNEL SLOPE =  0.0900
  CHANNEL FLOW THRU SUBAREA(CFS) =     200.43
  FLOW VELOCITY(FEET/SEC) =  17.61 (PER LACFCD/RCFC&WCD HYDROLOGY MANUAL)
  TRAVEL TIME(MIN.) =   0.19   Tc(MIN.) =    9.58
  LONGEST FLOWPATH FROM NODE   2001.00 TO NODE   2062.00 =    3300.00 FEET.

****************************************************************************
  FLOW PROCESS FROM NODE   2062.00 TO NODE   2062.00 IS CODE =   1
----------------------------------------------------------------------------
  >>>>>DESIGNATE INDEPENDENT STREAM FOR CONFLUENCE<<<<<
============================================================================
  TOTAL NUMBER OF STREAMS =  2
  CONFLUENCE VALUES USED FOR INDEPENDENT STREAM  1 ARE:
  TIME OF CONCENTRATION(MIN.) =    9.58
  RAINFALL INTENSITY(INCH/HR) =   5.54
```

```
  TOTAL STREAM AREA(ACRES) =    69.57
  PEAK FLOW RATE(CFS) AT CONFLUENCE =    200.43

****************************************************************************
  FLOW PROCESS FROM NODE   2060.00 TO NODE   2061.00 IS CODE =  21
----------------------------------------------------------------------------
  >>>>>RATIONAL METHOD INITIAL SUBAREA ANALYSIS<<<<<
============================================================================
  *USER SPECIFIED(SUBAREA):
  USER-SPECIFIED RUNOFF COEFFICIENT = .3500
  S.C.S. CURVE NUMBER (AMC II) =   0
  INITIAL SUBAREA FLOW-LENGTH(FEET) =   100.00
  UPSTREAM ELEVATION(FEET) =    724.00
  DOWNSTREAM ELEVATION(FEET) =    700.00
  ELEVATION DIFFERENCE(FEET) =     24.00
  SUBAREA OVERLAND TIME OF FLOW(MIN.) =    6.267
  WARNING: THE MAXIMUM OVERLAND FLOW SLOPE, 10.%, IS USED IN Tc CALCULATION!
   100 YEAR RAINFALL INTENSITY(INCH/HOUR) =  7.288
  SUBAREA RUNOFF(CFS) =      0.26
  TOTAL AREA(ACRES) =      0.10   TOTAL RUNOFF(CFS) =      0.26

****************************************************************************
  FLOW PROCESS FROM NODE   2061.00 TO NODE   2062.00 IS CODE =  51
----------------------------------------------------------------------------
  >>>>>COMPUTE TRAPEZOIDAL CHANNEL FLOW<<<<<
  >>>>>TRAVELTIME THRU SUBAREA (EXISTING ELEMENT)<<<<<
============================================================================
  ELEVATION DATA: UPSTREAM(FEET) =    700.00  DOWNSTREAM(FEET) =    654.00
  CHANNEL LENGTH THRU SUBAREA(FEET) =   400.00   CHANNEL SLOPE =  0.1150
  CHANNEL BASE(FEET) =    3.00   "Z" FACTOR =   2.000
  MANNING'S FACTOR = 0.030   MAXIMUM DEPTH(FEET) =  10.00
   100 YEAR RAINFALL INTENSITY(INCH/HOUR) =  6.328
  *USER SPECIFIED(SUBAREA):
  USER-SPECIFIED RUNOFF COEFFICIENT = .3500
  S.C.S. CURVE NUMBER (AMC II) =   0
  TRAVEL TIME COMPUTED USING ESTIMATED FLOW(CFS) =       2.12
  TRAVEL TIME THRU SUBAREA BASED ON VELOCITY(FEET/SEC.) =   4.34
  AVERAGE FLOW DEPTH(FEET) =   0.15   TRAVEL TIME(MIN.) =   1.53
  Tc(MIN.) =    7.80
  SUBAREA AREA(ACRES) =     1.67       SUBAREA RUNOFF(CFS) =    3.70
  AREA-AVERAGE RUNOFF COEFFICIENT =  0.350
  TOTAL AREA(ACRES) =        1.8         PEAK FLOW RATE(CFS) =       3.92

  END OF SUBAREA CHANNEL FLOW HYDRAULICS:
  DEPTH(FEET) =  0.21   FLOW VELOCITY(FEET/SEC.) =   5.44
  LONGEST FLOWPATH FROM NODE   2060.00 TO NODE   2062.00 =     500.00 FEET.

****************************************************************************
  FLOW PROCESS FROM NODE   2062.00 TO NODE   2062.00 IS CODE =   1
----------------------------------------------------------------------------
  >>>>>DESIGNATE INDEPENDENT STREAM FOR CONFLUENCE<<<<<
  >>>>>AND COMPUTE VARIOUS CONFLUENCED STREAM VALUES<<<<<
============================================================================
  TOTAL NUMBER OF STREAMS =  2
  CONFLUENCE VALUES USED FOR INDEPENDENT STREAM  2 ARE:
  TIME OF CONCENTRATION(MIN.) =    7.80
  RAINFALL INTENSITY(INCH/HR) =   6.33
  TOTAL STREAM AREA(ACRES) =     1.77
  PEAK FLOW RATE(CFS) AT CONFLUENCE =      3.92

  ** CONFLUENCE DATA **
  STREAM     RUNOFF       Tc      INTENSITY      AREA
  NUMBER      (CFS)     (MIN.)   (INCH/HOUR)    (ACRE)
```

```
     1      200.43     9.58        5.543         69.57
     2        3.92     7.80        6.328          1.77

  RAINFALL INTENSITY AND TIME OF CONCENTRATION RATIO
  CONFLUENCE FORMULA USED FOR  2 STREAMS.

  ** PEAK FLOW RATE TABLE **
  STREAM     RUNOFF      Tc      INTENSITY
  NUMBER      (CFS)    (MIN.)   (INCH/HOUR)
     1      167.15     7.80       6.328
     2      203.86     9.58       5.543

  COMPUTED CONFLUENCE ESTIMATES ARE AS FOLLOWS:
  PEAK FLOW RATE(CFS) =     203.86   Tc(MIN.) =    9.58
  TOTAL AREA(ACRES) =       71.3
  LONGEST FLOWPATH FROM NODE   2001.00 TO NODE   2062.00 =    3300.00 FEET.

****************************************************************************
  FLOW PROCESS FROM NODE   2062.00 TO NODE   2071.00 IS CODE =  51
----------------------------------------------------------------------------
  >>>>>COMPUTE TRAPEZOIDAL CHANNEL FLOW<<<<<
  >>>>>TRAVELTIME THRU SUBAREA (EXISTING ELEMENT)<<<<<
============================================================================
  ELEVATION DATA: UPSTREAM(FEET) =    654.00  DOWNSTREAM(FEET) =    651.00
  CHANNEL LENGTH THRU SUBAREA(FEET) =   225.00   CHANNEL SLOPE =  0.0133
  CHANNEL BASE(FEET) =    3.00   "Z" FACTOR =   2.000
  MANNING'S FACTOR = 0.030   MAXIMUM DEPTH(FEET) =  10.00
   100 YEAR RAINFALL INTENSITY(INCH/HOUR) =  5.372
  *USER SPECIFIED(SUBAREA):
  USER-SPECIFIED RUNOFF COEFFICIENT = .3500
  S.C.S. CURVE NUMBER (AMC II) =   0
  TRAVEL TIME COMPUTED USING ESTIMATED FLOW(CFS) =     204.27
  TRAVEL TIME THRU SUBAREA BASED ON VELOCITY(FEET/SEC.) =   7.86
  AVERAGE FLOW DEPTH(FEET) =   2.93   TRAVEL TIME(MIN.) =   0.48
  Tc(MIN.) =   10.06
  SUBAREA AREA(ACRES) =     0.43       SUBAREA RUNOFF(CFS) =    0.81
  AREA-AVERAGE RUNOFF COEFFICIENT =  0.508
  TOTAL AREA(ACRES) =       71.8         PEAK FLOW RATE(CFS) =     203.86

  END OF SUBAREA CHANNEL FLOW HYDRAULICS:
  DEPTH(FEET) =  2.93   FLOW VELOCITY(FEET/SEC.) =   7.87
  LONGEST FLOWPATH FROM NODE   2001.00 TO NODE   2071.00 =    3525.00 FEET.

****************************************************************************
  FLOW PROCESS FROM NODE   2071.00 TO NODE   2071.00 IS CODE =   1
----------------------------------------------------------------------------
  >>>>>DESIGNATE INDEPENDENT STREAM FOR CONFLUENCE<<<<<
============================================================================
  TOTAL NUMBER OF STREAMS =  3
  CONFLUENCE VALUES USED FOR INDEPENDENT STREAM  1 ARE:
  TIME OF CONCENTRATION(MIN.) =   10.06
  RAINFALL INTENSITY(INCH/HR) =   5.37
  TOTAL STREAM AREA(ACRES) =    71.77
  PEAK FLOW RATE(CFS) AT CONFLUENCE =    203.86

****************************************************************************
  FLOW PROCESS FROM NODE   2063.00 TO NODE   2064.00 IS CODE =  21
----------------------------------------------------------------------------
  >>>>>RATIONAL METHOD INITIAL SUBAREA ANALYSIS<<<<<
============================================================================
  *USER SPECIFIED(SUBAREA):
  USER-SPECIFIED RUNOFF COEFFICIENT = .3500
  S.C.S. CURVE NUMBER (AMC II) =   0
```

```
  INITIAL SUBAREA FLOW-LENGTH(FEET) =   100.00
  UPSTREAM ELEVATION(FEET) =    762.00
  DOWNSTREAM ELEVATION(FEET) =    752.00
  ELEVATION DIFFERENCE(FEET) =     10.00
  SUBAREA OVERLAND TIME OF FLOW(MIN.) =    6.267
  WARNING: THE MAXIMUM OVERLAND FLOW SLOPE, 10.%, IS USED IN Tc CALCULATION!
   100 YEAR RAINFALL INTENSITY(INCH/HOUR) =  7.288
  SUBAREA RUNOFF(CFS) =      0.26
  TOTAL AREA(ACRES) =      0.10   TOTAL RUNOFF(CFS) =      0.26

****************************************************************************
  FLOW PROCESS FROM NODE   2064.00 TO NODE   2065.00 IS CODE =  51
----------------------------------------------------------------------------
  >>>>>COMPUTE TRAPEZOIDAL CHANNEL FLOW<<<<<
  >>>>>TRAVELTIME THRU SUBAREA (EXISTING ELEMENT)<<<<<
============================================================================
  ELEVATION DATA: UPSTREAM(FEET) =    752.00  DOWNSTREAM(FEET) =    732.00
  CHANNEL LENGTH THRU SUBAREA(FEET) =   200.00   CHANNEL SLOPE =  0.1000
  CHANNEL BASE(FEET) =    3.00   "Z" FACTOR =   2.000
  MANNING'S FACTOR = 0.030   MAXIMUM DEPTH(FEET) =  10.00
   100 YEAR RAINFALL INTENSITY(INCH/HOUR) =  6.630
  *USER SPECIFIED(SUBAREA):
  USER-SPECIFIED RUNOFF COEFFICIENT = .3500
  S.C.S. CURVE NUMBER (AMC II) =   0
  TRAVEL TIME COMPUTED USING ESTIMATED FLOW(CFS) =       1.19
  TRAVEL TIME THRU SUBAREA BASED ON VELOCITY(FEET/SEC.) =   3.36
  AVERAGE FLOW DEPTH(FEET) =   0.11   TRAVEL TIME(MIN.) =   0.99
  Tc(MIN.) =    7.26
  SUBAREA AREA(ACRES) =     0.80       SUBAREA RUNOFF(CFS) =    1.86
  AREA-AVERAGE RUNOFF COEFFICIENT =  0.350
  TOTAL AREA(ACRES) =        0.9         PEAK FLOW RATE(CFS) =       2.09

  END OF SUBAREA CHANNEL FLOW HYDRAULICS:
  DEPTH(FEET) =  0.15   FLOW VELOCITY(FEET/SEC.) =   4.23
  LONGEST FLOWPATH FROM NODE   2063.00 TO NODE   2065.00 =     300.00 FEET.

****************************************************************************
  FLOW PROCESS FROM NODE   2065.00 TO NODE   2066.00 IS CODE =  51
----------------------------------------------------------------------------
  >>>>>COMPUTE TRAPEZOIDAL CHANNEL FLOW<<<<<
  >>>>>TRAVELTIME THRU SUBAREA (EXISTING ELEMENT)<<<<<
============================================================================
  ELEVATION DATA: UPSTREAM(FEET) =    732.00  DOWNSTREAM(FEET) =    702.00
  CHANNEL LENGTH THRU SUBAREA(FEET) =   300.00   CHANNEL SLOPE =  0.1000
  CHANNEL BASE(FEET) =    3.00   "Z" FACTOR =   2.000
  MANNING'S FACTOR = 0.030   MAXIMUM DEPTH(FEET) =  10.00
   100 YEAR RAINFALL INTENSITY(INCH/HOUR) =  6.162
  *USER SPECIFIED(SUBAREA):
  USER-SPECIFIED RUNOFF COEFFICIENT = .3500
  S.C.S. CURVE NUMBER (AMC II) =   0
  TRAVEL TIME COMPUTED USING ESTIMATED FLOW(CFS) =       5.16
  TRAVEL TIME THRU SUBAREA BASED ON VELOCITY(FEET/SEC.) =   5.73
  AVERAGE FLOW DEPTH(FEET) =   0.26   TRAVEL TIME(MIN.) =   0.87
  Tc(MIN.) =    8.13
  SUBAREA AREA(ACRES) =     2.85       SUBAREA RUNOFF(CFS) =    6.15
  AREA-AVERAGE RUNOFF COEFFICIENT =  0.350
  TOTAL AREA(ACRES) =        3.8         PEAK FLOW RATE(CFS) =       8.09

  END OF SUBAREA CHANNEL FLOW HYDRAULICS:
  DEPTH(FEET) =  0.33   FLOW VELOCITY(FEET/SEC.) =   6.63
  LONGEST FLOWPATH FROM NODE   2063.00 TO NODE   2066.00 =     600.00 FEET.

****************************************************************************
```

```
  FLOW PROCESS FROM NODE   2066.00 TO NODE   2067.00 IS CODE =  51
----------------------------------------------------------------------
  >>>>>COMPUTE TRAPEZOIDAL CHANNEL FLOW<<<<<
  >>>>>TRAVELTIME THRU SUBAREA (EXISTING ELEMENT)<<<<<
======================================================================
  ELEVATION DATA: UPSTREAM(FEET) =    702.00  DOWNSTREAM(FEET) =    672.00
  CHANNEL LENGTH THRU SUBAREA(FEET) =   300.00   CHANNEL SLOPE =  0.1000
  CHANNEL BASE(FEET) =    3.00   "Z" FACTOR =   2.000
  MANNING'S FACTOR = 0.030   MAXIMUM DEPTH(FEET) =  10.00
   100 YEAR RAINFALL INTENSITY(INCH/HOUR) =  5.845
  *USER SPECIFIED(SUBAREA):
  USER-SPECIFIED RUNOFF COEFFICIENT = .3500
  S.C.S. CURVE NUMBER (AMC II) =   0
  TRAVEL TIME COMPUTED USING ESTIMATED FLOW(CFS) =      10.76
  TRAVEL TIME THRU SUBAREA BASED ON VELOCITY(FEET/SEC.) =   7.21
  AVERAGE FLOW DEPTH(FEET) =   0.39   TRAVEL TIME(MIN.) =   0.69
  Tc(MIN.) =    8.82
  SUBAREA AREA(ACRES) =     2.61       SUBAREA RUNOFF(CFS) =    5.34
  AREA-AVERAGE RUNOFF COEFFICIENT =  0.350
  TOTAL AREA(ACRES) =        6.4         PEAK FLOW RATE(CFS) =      13.01

  END OF SUBAREA CHANNEL FLOW HYDRAULICS:
  DEPTH(FEET) =  0.44   FLOW VELOCITY(FEET/SEC.) =   7.67
  LONGEST FLOWPATH FROM NODE   2063.00 TO NODE   2067.00 =     900.00 FEET.

****************************************************************************
  FLOW PROCESS FROM NODE   2067.00 TO NODE   2071.00 IS CODE =  51
----------------------------------------------------------------------
  >>>>>COMPUTE TRAPEZOIDAL CHANNEL FLOW<<<<<
  >>>>>TRAVELTIME THRU SUBAREA (EXISTING ELEMENT)<<<<<
======================================================================
  ELEVATION DATA: UPSTREAM(FEET) =    672.00  DOWNSTREAM(FEET) =    651.00
  CHANNEL LENGTH THRU SUBAREA(FEET) =   240.00   CHANNEL SLOPE =  0.0875
  CHANNEL BASE(FEET) =    3.00   "Z" FACTOR =   2.000
  MANNING'S FACTOR = 0.030   MAXIMUM DEPTH(FEET) =  10.00
   100 YEAR RAINFALL INTENSITY(INCH/HOUR) =  5.627
  *USER SPECIFIED(SUBAREA):
  USER-SPECIFIED RUNOFF COEFFICIENT = .3500
  S.C.S. CURVE NUMBER (AMC II) =   0
  TRAVEL TIME COMPUTED USING ESTIMATED FLOW(CFS) =      13.85
  TRAVEL TIME THRU SUBAREA BASED ON VELOCITY(FEET/SEC.) =   7.47
  AVERAGE FLOW DEPTH(FEET) =   0.47   TRAVEL TIME(MIN.) =   0.54
  Tc(MIN.) =    9.36
  SUBAREA AREA(ACRES) =     0.85       SUBAREA RUNOFF(CFS) =    1.67
  AREA-AVERAGE RUNOFF COEFFICIENT =  0.350
  TOTAL AREA(ACRES) =        7.2         PEAK FLOW RATE(CFS) =      14.20

  END OF SUBAREA CHANNEL FLOW HYDRAULICS:
  DEPTH(FEET) =  0.48   FLOW VELOCITY(FEET/SEC.) =   7.51
  LONGEST FLOWPATH FROM NODE   2063.00 TO NODE   2071.00 =    1140.00 FEET.

****************************************************************************
  FLOW PROCESS FROM NODE   2071.00 TO NODE   2071.00 IS CODE =   1
----------------------------------------------------------------------
  >>>>>DESIGNATE INDEPENDENT STREAM FOR CONFLUENCE<<<<<
======================================================================
  TOTAL NUMBER OF STREAMS =  3
  CONFLUENCE VALUES USED FOR INDEPENDENT STREAM  2 ARE:
  TIME OF CONCENTRATION(MIN.) =    9.36
  RAINFALL INTENSITY(INCH/HR) =   5.63
  TOTAL STREAM AREA(ACRES) =     7.21
  PEAK FLOW RATE(CFS) AT CONFLUENCE =     14.20
```

```
****************************************************************************
  FLOW PROCESS FROM NODE   2068.00 TO NODE   2069.00 IS CODE =  21
----------------------------------------------------------------------------
  >>>>>RATIONAL METHOD INITIAL SUBAREA ANALYSIS<<<<<
============================================================================
  *USER SPECIFIED(SUBAREA):
  USER-SPECIFIED RUNOFF COEFFICIENT = .3500
  S.C.S. CURVE NUMBER (AMC II) =   0
  INITIAL SUBAREA FLOW-LENGTH(FEET) =   100.00
  UPSTREAM ELEVATION(FEET) =    740.00
  DOWNSTREAM ELEVATION(FEET) =    732.00
  ELEVATION DIFFERENCE(FEET) =      8.00
  SUBAREA OVERLAND TIME OF FLOW(MIN.) =    6.750
   100 YEAR RAINFALL INTENSITY(INCH/HOUR) =  6.947
  SUBAREA RUNOFF(CFS) =      0.24
  TOTAL AREA(ACRES) =      0.10   TOTAL RUNOFF(CFS) =      0.24

****************************************************************************
  FLOW PROCESS FROM NODE   2069.00 TO NODE   2070.00 IS CODE =  51
----------------------------------------------------------------------------
  >>>>>COMPUTE TRAPEZOIDAL CHANNEL FLOW<<<<<
  >>>>>TRAVELTIME THRU SUBAREA (EXISTING ELEMENT)<<<<<
============================================================================
  ELEVATION DATA: UPSTREAM(FEET) =    732.00  DOWNSTREAM(FEET) =    654.00
  CHANNEL LENGTH THRU SUBAREA(FEET) =   650.00   CHANNEL SLOPE =  0.1200
  CHANNEL BASE(FEET) =    3.00   "Z" FACTOR =   2.000
  MANNING'S FACTOR = 0.030   MAXIMUM DEPTH(FEET) =  10.00
   100 YEAR RAINFALL INTENSITY(INCH/HOUR) =  5.751
  *USER SPECIFIED(SUBAREA):
  USER-SPECIFIED RUNOFF COEFFICIENT = .3500
  S.C.S. CURVE NUMBER (AMC II) =   0
  TRAVEL TIME COMPUTED USING ESTIMATED FLOW(CFS) =       2.46
  TRAVEL TIME THRU SUBAREA BASED ON VELOCITY(FEET/SEC.) =   4.71
  AVERAGE FLOW DEPTH(FEET) =   0.16   TRAVEL TIME(MIN.) =   2.30
  Tc(MIN.) =    9.05
  SUBAREA AREA(ACRES) =     2.18       SUBAREA RUNOFF(CFS) =    4.39
  AREA-AVERAGE RUNOFF COEFFICIENT =  0.350
  TOTAL AREA(ACRES) =        2.3         PEAK FLOW RATE(CFS) =       4.59

  END OF SUBAREA CHANNEL FLOW HYDRAULICS:
  DEPTH(FEET) =  0.23   FLOW VELOCITY(FEET/SEC.) =   5.88
  LONGEST FLOWPATH FROM NODE   2068.00 TO NODE   2070.00 =     750.00 FEET.

****************************************************************************
  FLOW PROCESS FROM NODE   2070.00 TO NODE   2071.00 IS CODE =  52
----------------------------------------------------------------------------
  >>>>>COMPUTE NATURAL VALLEY CHANNEL FLOW<<<<<
  >>>>>TRAVELTIME THRU SUBAREA<<<<<
============================================================================
  ELEVATION DATA: UPSTREAM(FEET) =    654.00  DOWNSTREAM(FEET) =    651.00
  CHANNEL LENGTH THRU SUBAREA(FEET) =   100.00   CHANNEL SLOPE =  0.0300
  CHANNEL FLOW THRU SUBAREA(CFS) =       4.59
  FLOW VELOCITY(FEET/SEC) =   3.58 (PER LACFCD/RCFC&WCD HYDROLOGY MANUAL)
  TRAVEL TIME(MIN.) =   0.47   Tc(MIN.) =    9.51
  LONGEST FLOWPATH FROM NODE   2068.00 TO NODE   2071.00 =     850.00 FEET.

****************************************************************************
  FLOW PROCESS FROM NODE   2071.00 TO NODE   2071.00 IS CODE =   1
----------------------------------------------------------------------------
  >>>>>DESIGNATE INDEPENDENT STREAM FOR CONFLUENCE<<<<<
  >>>>>AND COMPUTE VARIOUS CONFLUENCED STREAM VALUES<<<<<
============================================================================
  TOTAL NUMBER OF STREAMS =  3
```

```
  CONFLUENCE VALUES USED FOR INDEPENDENT STREAM  3 ARE:
  TIME OF CONCENTRATION(MIN.) =    9.51
  RAINFALL INTENSITY(INCH/HR) =   5.57
  TOTAL STREAM AREA(ACRES) =     2.28
  PEAK FLOW RATE(CFS) AT CONFLUENCE =      4.59

  ** CONFLUENCE DATA **
  STREAM     RUNOFF       Tc      INTENSITY      AREA
  NUMBER      (CFS)     (MIN.)   (INCH/HOUR)    (ACRE)
      1      203.86    10.06        5.372         71.77
      2       14.20     9.36        5.627          7.21
      3        4.59     9.51        5.568          2.28

  RAINFALL INTENSITY AND TIME OF CONCENTRATION RATIO
  CONFLUENCE FORMULA USED FOR  3 STREAMS.

  ** PEAK FLOW RATE TABLE **
  STREAM     RUNOFF      Tc      INTENSITY
  NUMBER      (CFS)    (MIN.)   (INCH/HOUR)
      1      213.34     9.36       5.627
      2      215.34     9.51       5.568
      3      221.85    10.06       5.372

  COMPUTED CONFLUENCE ESTIMATES ARE AS FOLLOWS:
  PEAK FLOW RATE(CFS) =     221.85   Tc(MIN.) =   10.06
  TOTAL AREA(ACRES) =       81.3
  LONGEST FLOWPATH FROM NODE   2001.00 TO NODE   2071.00 =    3525.00 FEET.

****************************************************************************
  FLOW PROCESS FROM NODE   2071.00 TO NODE   2076.00 IS CODE =  52
----------------------------------------------------------------------------
  >>>>>COMPUTE NATURAL VALLEY CHANNEL FLOW<<<<<
  >>>>>TRAVELTIME THRU SUBAREA<<<<<
============================================================================
  ELEVATION DATA: UPSTREAM(FEET) =    651.00  DOWNSTREAM(FEET) =    630.00
  CHANNEL LENGTH THRU SUBAREA(FEET) =   590.00   CHANNEL SLOPE =  0.0356
  CHANNEL FLOW THRU SUBAREA(CFS) =     221.85
  FLOW VELOCITY(FEET/SEC) =  11.43 (PER LACFCD/RCFC&WCD HYDROLOGY MANUAL)
  TRAVEL TIME(MIN.) =   0.86   Tc(MIN.) =   10.92
  LONGEST FLOWPATH FROM NODE   2001.00 TO NODE   2076.00 =    4115.00 FEET.

****************************************************************************
  FLOW PROCESS FROM NODE   2076.00 TO NODE   2076.00 IS CODE =   1
----------------------------------------------------------------------------
  >>>>>DESIGNATE INDEPENDENT STREAM FOR CONFLUENCE<<<<<
============================================================================
  TOTAL NUMBER OF STREAMS =  3
  CONFLUENCE VALUES USED FOR INDEPENDENT STREAM  1 ARE:
  TIME OF CONCENTRATION(MIN.) =   10.92
  RAINFALL INTENSITY(INCH/HR) =   5.09
  TOTAL STREAM AREA(ACRES) =    81.26
  PEAK FLOW RATE(CFS) AT CONFLUENCE =    221.85

****************************************************************************
  FLOW PROCESS FROM NODE   2072.00 TO NODE   2073.00 IS CODE =  21
----------------------------------------------------------------------------
  >>>>>RATIONAL METHOD INITIAL SUBAREA ANALYSIS<<<<<
============================================================================
  *USER SPECIFIED(SUBAREA):
  USER-SPECIFIED RUNOFF COEFFICIENT = .3500
  S.C.S. CURVE NUMBER (AMC II) =   0
  INITIAL SUBAREA FLOW-LENGTH(FEET) =   100.00
  UPSTREAM ELEVATION(FEET) =    664.00
```

```
  DOWNSTREAM ELEVATION(FEET) =    654.00
  ELEVATION DIFFERENCE(FEET) =     10.00
  SUBAREA OVERLAND TIME OF FLOW(MIN.) =    6.267
  WARNING: THE MAXIMUM OVERLAND FLOW SLOPE, 10.%, IS USED IN Tc CALCULATION!
   100 YEAR RAINFALL INTENSITY(INCH/HOUR) =  7.288
  SUBAREA RUNOFF(CFS) =      0.66
  TOTAL AREA(ACRES) =      0.26   TOTAL RUNOFF(CFS) =      0.66

****************************************************************************
  FLOW PROCESS FROM NODE   2073.00 TO NODE   2074.00 IS CODE =  51
----------------------------------------------------------------------------
  >>>>>COMPUTE TRAPEZOIDAL CHANNEL FLOW<<<<<
  >>>>>TRAVELTIME THRU SUBAREA (EXISTING ELEMENT)<<<<<
============================================================================
  ELEVATION DATA: UPSTREAM(FEET) =    654.00  DOWNSTREAM(FEET) =    638.00
  CHANNEL LENGTH THRU SUBAREA(FEET) =   260.00   CHANNEL SLOPE =  0.0615
  CHANNEL BASE(FEET) =    3.00   "Z" FACTOR =   2.000
  MANNING'S FACTOR = 0.030   MAXIMUM DEPTH(FEET) =  10.00
   100 YEAR RAINFALL INTENSITY(INCH/HOUR) =  6.454
  *USER SPECIFIED(SUBAREA):
  USER-SPECIFIED RUNOFF COEFFICIENT = .3500
  S.C.S. CURVE NUMBER (AMC II) =   0
  TRAVEL TIME COMPUTED USING ESTIMATED FLOW(CFS) =       1.74
  TRAVEL TIME THRU SUBAREA BASED ON VELOCITY(FEET/SEC.) =   3.33
  AVERAGE FLOW DEPTH(FEET) =   0.16   TRAVEL TIME(MIN.) =   1.30
  Tc(MIN.) =    7.57
  SUBAREA AREA(ACRES) =     0.95       SUBAREA RUNOFF(CFS) =    2.15
  AREA-AVERAGE RUNOFF COEFFICIENT =  0.350
  TOTAL AREA(ACRES) =        1.2         PEAK FLOW RATE(CFS) =       2.73

  END OF SUBAREA CHANNEL FLOW HYDRAULICS:
  DEPTH(FEET) =  0.20   FLOW VELOCITY(FEET/SEC.) =   3.95
  LONGEST FLOWPATH FROM NODE   2072.00 TO NODE   2074.00 =     360.00 FEET.

****************************************************************************
  FLOW PROCESS FROM NODE   2074.00 TO NODE   2076.00 IS CODE =  51
----------------------------------------------------------------------------
  >>>>>COMPUTE TRAPEZOIDAL CHANNEL FLOW<<<<<
  >>>>>TRAVELTIME THRU SUBAREA (EXISTING ELEMENT)<<<<<
============================================================================
  ELEVATION DATA: UPSTREAM(FEET) =    638.00  DOWNSTREAM(FEET) =    630.00
  CHANNEL LENGTH THRU SUBAREA(FEET) =   355.00   CHANNEL SLOPE =  0.0225
  CHANNEL BASE(FEET) =    3.00   "Z" FACTOR =   2.000
  MANNING'S FACTOR = 0.030   MAXIMUM DEPTH(FEET) =  10.00
   100 YEAR RAINFALL INTENSITY(INCH/HOUR) =  5.652
  *USER SPECIFIED(SUBAREA):
  USER-SPECIFIED RUNOFF COEFFICIENT = .3500
  S.C.S. CURVE NUMBER (AMC II) =   0
  TRAVEL TIME COMPUTED USING ESTIMATED FLOW(CFS) =       5.10
  TRAVEL TIME THRU SUBAREA BASED ON VELOCITY(FEET/SEC.) =   3.42
  AVERAGE FLOW DEPTH(FEET) =   0.39   TRAVEL TIME(MIN.) =   1.73
  Tc(MIN.) =    9.30
  SUBAREA AREA(ACRES) =     2.39       SUBAREA RUNOFF(CFS) =    4.73
  AREA-AVERAGE RUNOFF COEFFICIENT =  0.350
  TOTAL AREA(ACRES) =        3.6         PEAK FLOW RATE(CFS) =       7.12

  END OF SUBAREA CHANNEL FLOW HYDRAULICS:
  DEPTH(FEET) =  0.48   FLOW VELOCITY(FEET/SEC.) =   3.79
  LONGEST FLOWPATH FROM NODE   2072.00 TO NODE   2076.00 =     715.00 FEET.

****************************************************************************
  FLOW PROCESS FROM NODE   2076.00 TO NODE   2076.00 IS CODE =   1
----------------------------------------------------------------------------
```

```
  >>>>>DESIGNATE INDEPENDENT STREAM FOR CONFLUENCE<<<<<
==============================================================================
  TOTAL NUMBER OF STREAMS =  3
  CONFLUENCE VALUES USED FOR INDEPENDENT STREAM  2 ARE:
  TIME OF CONCENTRATION(MIN.) =    9.30
  RAINFALL INTENSITY(INCH/HR) =   5.65
  TOTAL STREAM AREA(ACRES) =     3.60
  PEAK FLOW RATE(CFS) AT CONFLUENCE =      7.12

******************************************************************************
  FLOW PROCESS FROM NODE   2075.00 TO NODE   2075.00 IS CODE =   7
------------------------------------------------------------------------------
  >>>>>USER SPECIFIED HYDROLOGY INFORMATION AT NODE<<<<<
==============================================================================
  USER-SPECIFIED VALUES ARE AS FOLLOWS:
  TC(MIN) =  10.00   RAIN INTENSITY(INCH/HOUR) =  5.39
  TOTAL AREA(ACRES) =     3.43   TOTAL RUNOFF(CFS) =      5.40

******************************************************************************
  FLOW PROCESS FROM NODE   2075.00 TO NODE   2076.00 IS CODE =  51
------------------------------------------------------------------------------
  >>>>>COMPUTE TRAPEZOIDAL CHANNEL FLOW<<<<<
  >>>>>TRAVELTIME THRU SUBAREA (EXISTING ELEMENT)<<<<<
==============================================================================
  ELEVATION DATA: UPSTREAM(FEET) =    660.00  DOWNSTREAM(FEET) =    630.00
  CHANNEL LENGTH THRU SUBAREA(FEET) =   720.00   CHANNEL SLOPE =  0.0417
  CHANNEL BASE(FEET) =    3.00   "Z" FACTOR =   2.000
  MANNING'S FACTOR = 0.030   MAXIMUM DEPTH(FEET) =  10.00
   100 YEAR RAINFALL INTENSITY(INCH/HOUR) =  4.641
  *USER SPECIFIED(SUBAREA):
  USER-SPECIFIED RUNOFF COEFFICIENT = .3500
  S.C.S. CURVE NUMBER (AMC II) =   0
  TRAVEL TIME COMPUTED USING ESTIMATED FLOW(CFS) =       6.64
  TRAVEL TIME THRU SUBAREA BASED ON VELOCITY(FEET/SEC.) =   4.59
  AVERAGE FLOW DEPTH(FEET) =   0.38   TRAVEL TIME(MIN.) =   2.62
  Tc(MIN.) =   12.62
  SUBAREA AREA(ACRES) =     1.53       SUBAREA RUNOFF(CFS) =    2.49
  AREA-AVERAGE RUNOFF COEFFICIENT =  0.310
  TOTAL AREA(ACRES) =        5.0         PEAK FLOW RATE(CFS) =       7.13

  END OF SUBAREA CHANNEL FLOW HYDRAULICS:
  DEPTH(FEET) =  0.40   FLOW VELOCITY(FEET/SEC.) =   4.70
  LONGEST FLOWPATH FROM NODE   2068.00 TO NODE   2076.00 =    1570.00 FEET.

******************************************************************************
  FLOW PROCESS FROM NODE   2076.00 TO NODE   2076.00 IS CODE =   1
------------------------------------------------------------------------------
  >>>>>DESIGNATE INDEPENDENT STREAM FOR CONFLUENCE<<<<<
  >>>>>AND COMPUTE VARIOUS CONFLUENCED STREAM VALUES<<<<<
==============================================================================
  TOTAL NUMBER OF STREAMS =  3
  CONFLUENCE VALUES USED FOR INDEPENDENT STREAM  3 ARE:
  TIME OF CONCENTRATION(MIN.) =   12.62
  RAINFALL INTENSITY(INCH/HR) =   4.64
  TOTAL STREAM AREA(ACRES) =     4.96
  PEAK FLOW RATE(CFS) AT CONFLUENCE =      7.13

  ** CONFLUENCE DATA **
  STREAM     RUNOFF       Tc      INTENSITY      AREA
  NUMBER      (CFS)     (MIN.)   (INCH/HOUR)    (ACRE)
      1      221.85    10.92        5.095         81.26
      2        7.12     9.30        5.652          3.60
      3        7.13    12.62        4.641          4.96
```

```
  RAINFALL INTENSITY AND TIME OF CONCENTRATION RATIO
  CONFLUENCE FORMULA USED FOR  3 STREAMS.

  ** PEAK FLOW RATE TABLE **
  STREAM     RUNOFF      Tc      INTENSITY
  NUMBER      (CFS)    (MIN.)   (INCH/HOUR)
      1      212.37     9.30       5.652
      2      234.44    10.92       5.095
      3      215.06    12.62       4.641

  COMPUTED CONFLUENCE ESTIMATES ARE AS FOLLOWS:
  PEAK FLOW RATE(CFS) =     234.44   Tc(MIN.) =   10.92
  TOTAL AREA(ACRES) =       89.8
  LONGEST FLOWPATH FROM NODE   2001.00 TO NODE   2076.00 =    4115.00 FEET.

****************************************************************************
  FLOW PROCESS FROM NODE   2076.00 TO NODE   2076.00 IS CODE =  11
----------------------------------------------------------------------------
  >>>>>CONFLUENCE MEMORY BANK # 1 WITH THE MAIN-STREAM MEMORY<<<<<
============================================================================

  ** MAIN STREAM CONFLUENCE DATA **
  STREAM     RUNOFF      Tc      INTENSITY     AREA
  NUMBER      (CFS)    (MIN.)   (INCH/HOUR)   (ACRE)
      1      234.44    10.92       5.095       89.82
  LONGEST FLOWPATH FROM NODE   2001.00 TO NODE   2076.00 =    4115.00 FEET.

  ** MEMORY BANK #  1 CONFLUENCE DATA **
  STREAM     RUNOFF      Tc      INTENSITY     AREA
  NUMBER      (CFS)    (MIN.)   (INCH/HOUR)   (ACRE)
      1       98.67    11.65       4.885       38.64
  LONGEST FLOWPATH FROM NODE   2001.00 TO NODE   2076.00 =    3100.00 FEET.

  ** PEAK FLOW RATE TABLE **
  STREAM    RUNOFF       Tc      INTENSITY
  NUMBER     (CFS)     (MIN.)   (INCH/HOUR)
      1     326.86      10.92        5.095
      2     323.43      11.65        4.885

  COMPUTED CONFLUENCE ESTIMATES ARE AS FOLLOWS:
  PEAK FLOW RATE(CFS) =     326.86   Tc(MIN.) =   10.92
  TOTAL AREA(ACRES) =      128.5

****************************************************************************
  FLOW PROCESS FROM NODE   2076.00 TO NODE   2076.00 IS CODE =  12
----------------------------------------------------------------------------
  >>>>>CLEAR MEMORY BANK # 1 <<<<<
============================================================================

****************************************************************************
  FLOW PROCESS FROM NODE   2076.00 TO NODE   2077.00 IS CODE =  51
----------------------------------------------------------------------------
  >>>>>COMPUTE TRAPEZOIDAL CHANNEL FLOW<<<<<
  >>>>>TRAVELTIME THRU SUBAREA (EXISTING ELEMENT)<<<<<
============================================================================
  ELEVATION DATA: UPSTREAM(FEET) =    630.00  DOWNSTREAM(FEET) =    629.00
  CHANNEL LENGTH THRU SUBAREA(FEET) =   125.00   CHANNEL SLOPE =  0.0080
  CHANNEL BASE(FEET) =    3.00   "Z" FACTOR =   2.000
  MANNING'S FACTOR = 0.030   MAXIMUM DEPTH(FEET) =  10.00
   100 YEAR RAINFALL INTENSITY(INCH/HOUR) =  5.011
  *USER SPECIFIED(SUBAREA):
  USER-SPECIFIED RUNOFF COEFFICIENT = .3500
```

```
  S.C.S. CURVE NUMBER (AMC II) =   0
  TRAVEL TIME COMPUTED USING ESTIMATED FLOW(CFS) =     327.68
  TRAVEL TIME THRU SUBAREA BASED ON VELOCITY(FEET/SEC.) =   7.32
  AVERAGE FLOW DEPTH(FEET) =   4.04   TRAVEL TIME(MIN.) =   0.28
  Tc(MIN.) =   11.20
  SUBAREA AREA(ACRES) =     0.93       SUBAREA RUNOFF(CFS) =    1.63
  AREA-AVERAGE RUNOFF COEFFICIENT =  0.477
  TOTAL AREA(ACRES) =      129.4         PEAK FLOW RATE(CFS) =     326.86

  END OF SUBAREA CHANNEL FLOW HYDRAULICS:
  DEPTH(FEET) =  4.03   FLOW VELOCITY(FEET/SEC.) =   7.32
  LONGEST FLOWPATH FROM NODE   2001.00 TO NODE   2077.00 =    4240.00 FEET.

****************************************************************************
  FLOW PROCESS FROM NODE   2077.00 TO NODE   2077.00 IS CODE =  10
----------------------------------------------------------------------------
  >>>>>MAIN-STREAM MEMORY COPIED ONTO MEMORY BANK # 1 <<<<<
============================================================================

****************************************************************************
  FLOW PROCESS FROM NODE   2079.00 TO NODE   2080.00 IS CODE =  21
----------------------------------------------------------------------------
  >>>>>RATIONAL METHOD INITIAL SUBAREA ANALYSIS<<<<<
============================================================================
  *USER SPECIFIED(SUBAREA):
  USER-SPECIFIED RUNOFF COEFFICIENT = .7100
  S.C.S. CURVE NUMBER (AMC II) =   0
  INITIAL SUBAREA FLOW-LENGTH(FEET) =   100.00
  UPSTREAM ELEVATION(FEET) =    646.00
  DOWNSTREAM ELEVATION(FEET) =    644.00
  ELEVATION DIFFERENCE(FEET) =      2.00
  SUBAREA OVERLAND TIME OF FLOW(MIN.) =    4.984
  WARNING: INITIAL SUBAREA FLOW PATH LENGTH IS GREATER THAN
           THE MAXIMUM OVERLAND FLOW LENGTH =    80.00
           (Reference: Table 3-1B of Hydrology Manual)
           THE MAXIMUM OVERLAND FLOW LENGTH IS USED IN Tc CALCULATION!
   100 YEAR RAINFALL INTENSITY(INCH/HOUR) =  8.431
  NOTE: RAINFALL INTENSITY IS BASED ON Tc = 5-MINUTE.
  SUBAREA RUNOFF(CFS) =      1.86
  TOTAL AREA(ACRES) =      0.31   TOTAL RUNOFF(CFS) =      1.86

****************************************************************************
  FLOW PROCESS FROM NODE   2080.00 TO NODE   2081.00 IS CODE =  62
----------------------------------------------------------------------------
  >>>>>COMPUTE STREET FLOW TRAVEL TIME THRU SUBAREA<<<<<
  >>>>>(STREET TABLE SECTION #  1 USED)<<<<<
============================================================================
  UPSTREAM ELEVATION(FEET) =  643.50  DOWNSTREAM ELEVATION(FEET) =  641.00
  STREET LENGTH(FEET) =   360.00   CURB HEIGHT(INCHES) =  4.0
  STREET HALFWIDTH(FEET) = 16.00

  DISTANCE FROM CROWN TO CROSSFALL GRADEBREAK(FEET) =   8.00
  INSIDE STREET CROSSFALL(DECIMAL) =  0.020
  OUTSIDE STREET CROSSFALL(DECIMAL)  =  0.020

  SPECIFIED NUMBER OF HALFSTREETS CARRYING RUNOFF =  1
  STREET PARKWAY CROSSFALL(DECIMAL)  =  0.020
  Manning's FRICTION FACTOR for Streetflow Section(curb-to-curb) =   0.0150
  Manning's FRICTION FACTOR for Back-of-Walk Flow Section =   0.0150

    **TRAVEL TIME COMPUTED USING ESTIMATED FLOW(CFS) =       6.65
    ***STREET FLOW SPLITS OVER STREET-CROWN***
    FULL DEPTH(FEET) =    0.34   FLOOD WIDTH(FEET) =   16.23
```

```
    FULL HALF-STREET VELOCITY(FEET/SEC.) =    2.40
    SPLIT DEPTH(FEET) =    0.14   SPLIT FLOOD WIDTH(FEET) =    6.30
    SPLIT FLOW(CFS) =    0.51   SPLIT VELOCITY(FEET/SEC.) =    1.28
    STREETFLOW MODEL RESULTS USING ESTIMATED FLOW:
    STREET FLOW DEPTH(FEET) =  0.34
    HALFSTREET FLOOD WIDTH(FEET) =   16.23
    AVERAGE FLOW VELOCITY(FEET/SEC.) =    2.40
    PRODUCT OF DEPTH&VELOCITY(FT*FT/SEC.) =    0.81
  STREET FLOW TRAVEL TIME(MIN.) =   2.50   Tc(MIN.) =    7.48
   100 YEAR RAINFALL INTENSITY(INCH/HOUR) =  6.499
  *USER SPECIFIED(SUBAREA):
  USER-SPECIFIED RUNOFF COEFFICIENT = .7100
  S.C.S. CURVE NUMBER (AMC II) =   0
  AREA-AVERAGE RUNOFF COEFFICIENT =  0.710
  SUBAREA AREA(ACRES) =    2.08      SUBAREA RUNOFF(CFS) =    9.60
  TOTAL AREA(ACRES) =        2.4        PEAK FLOW RATE(CFS) =      11.03

  END OF SUBAREA STREET FLOW HYDRAULICS:
  DEPTH(FEET) = 0.34   HALFSTREET FLOOD WIDTH(FEET) =  16.23
  FLOW VELOCITY(FEET/SEC.) =  2.40   DEPTH*VELOCITY(FT*FT/SEC.) =   0.81
  *NOTE: INITIAL SUBAREA NOMOGRAPH WITH SUBAREA PARAMETERS,
         AND L =  360.0 FT WITH ELEVATION-DROP =   2.5 FT, IS   11.2 CFS,
         WHICH EXCEEDS THE TOP-OF-CURB STREET CAPACITY AT NODE   2081.00
  LONGEST FLOWPATH FROM NODE   2079.00 TO NODE   2081.00 =     460.00 FEET.

****************************************************************************
  FLOW PROCESS FROM NODE   2081.00 TO NODE   2082.00 IS CODE =  31
----------------------------------------------------------------------------
  >>>>>COMPUTE PIPE-FLOW TRAVEL TIME THRU SUBAREA<<<<<
  >>>>>USING COMPUTER-ESTIMATED PIPESIZE (NON-PRESSURE FLOW)<<<<<
============================================================================
  ELEVATION DATA: UPSTREAM(FEET) =   635.00  DOWNSTREAM(FEET) =   632.40
  FLOW LENGTH(FEET) =    40.00   MANNING'S N =  0.013
  DEPTH OF FLOW IN  15.0 INCH PIPE IS   9.3 INCHES
  PIPE-FLOW VELOCITY(FEET/SEC.) =  13.80
  ESTIMATED PIPE DIAMETER(INCH) =  15.00    NUMBER OF PIPES =   1
  PIPE-FLOW(CFS) =      11.03
  PIPE TRAVEL TIME(MIN.) =   0.05    Tc(MIN.) =    7.53
  LONGEST FLOWPATH FROM NODE   2079.00 TO NODE   2082.00 =     500.00 FEET.

****************************************************************************
  FLOW PROCESS FROM NODE   2082.00 TO NODE   2082.00 IS CODE =   1
----------------------------------------------------------------------------
  >>>>>DESIGNATE INDEPENDENT STREAM FOR CONFLUENCE<<<<<
============================================================================
  TOTAL NUMBER OF STREAMS =  2
  CONFLUENCE VALUES USED FOR INDEPENDENT STREAM  1 ARE:
  TIME OF CONCENTRATION(MIN.) =    7.53
  RAINFALL INTENSITY(INCH/HR) =   6.47
  TOTAL STREAM AREA(ACRES) =     2.39
  PEAK FLOW RATE(CFS) AT CONFLUENCE =     11.03

****************************************************************************
  FLOW PROCESS FROM NODE   2081.10 TO NODE   2081.20 IS CODE =  21
----------------------------------------------------------------------------
  >>>>>RATIONAL METHOD INITIAL SUBAREA ANALYSIS<<<<<
============================================================================
  *USER SPECIFIED(SUBAREA):
  USER-SPECIFIED RUNOFF COEFFICIENT = .7100
  S.C.S. CURVE NUMBER (AMC II) =   0
  INITIAL SUBAREA FLOW-LENGTH(FEET) =   100.00
  UPSTREAM ELEVATION(FEET) =    646.00
  DOWNSTREAM ELEVATION(FEET) =    644.00
```

```
  ELEVATION DIFFERENCE(FEET) =      2.00
  SUBAREA OVERLAND TIME OF FLOW(MIN.) =    4.984
  WARNING: INITIAL SUBAREA FLOW PATH LENGTH IS GREATER THAN
           THE MAXIMUM OVERLAND FLOW LENGTH =    80.00
           (Reference: Table 3-1B of Hydrology Manual)
           THE MAXIMUM OVERLAND FLOW LENGTH IS USED IN Tc CALCULATION!
   100 YEAR RAINFALL INTENSITY(INCH/HOUR) =  8.431
  NOTE: RAINFALL INTENSITY IS BASED ON Tc = 5-MINUTE.
  SUBAREA RUNOFF(CFS) =      1.92
  TOTAL AREA(ACRES) =      0.32   TOTAL RUNOFF(CFS) =      1.92

****************************************************************************
  FLOW PROCESS FROM NODE   2081.20 TO NODE   2082.00 IS CODE =  62
----------------------------------------------------------------------------
  >>>>>COMPUTE STREET FLOW TRAVEL TIME THRU SUBAREA<<<<<
  >>>>>(STREET TABLE SECTION #  1 USED)<<<<<
============================================================================
  UPSTREAM ELEVATION(FEET) =  644.00  DOWNSTREAM ELEVATION(FEET) =  641.00
  STREET LENGTH(FEET) =   260.00   CURB HEIGHT(INCHES) =  4.0
  STREET HALFWIDTH(FEET) = 16.00

  DISTANCE FROM CROWN TO CROSSFALL GRADEBREAK(FEET) =   8.00
  INSIDE STREET CROSSFALL(DECIMAL) =  0.020
  OUTSIDE STREET CROSSFALL(DECIMAL)  =  0.020

  SPECIFIED NUMBER OF HALFSTREETS CARRYING RUNOFF =  1
  STREET PARKWAY CROSSFALL(DECIMAL)  =  0.020
  Manning's FRICTION FACTOR for Streetflow Section(curb-to-curb) =   0.0150
  Manning's FRICTION FACTOR for Back-of-Walk Flow Section =   0.0150

    **TRAVEL TIME COMPUTED USING ESTIMATED FLOW(CFS) =       5.18
    STREETFLOW MODEL RESULTS USING ESTIMATED FLOW:
    STREET FLOW DEPTH(FEET) =  0.29
    HALFSTREET FLOOD WIDTH(FEET) =   13.66
    AVERAGE FLOW VELOCITY(FEET/SEC.) =    2.77
    PRODUCT OF DEPTH&VELOCITY(FT*FT/SEC.) =    0.81
  STREET FLOW TRAVEL TIME(MIN.) =   1.56   Tc(MIN.) =    6.55
   100 YEAR RAINFALL INTENSITY(INCH/HOUR) =  7.086
  *USER SPECIFIED(SUBAREA):
  USER-SPECIFIED RUNOFF COEFFICIENT = .7100
  S.C.S. CURVE NUMBER (AMC II) =   0
  AREA-AVERAGE RUNOFF COEFFICIENT =  0.710
  SUBAREA AREA(ACRES) =    1.29      SUBAREA RUNOFF(CFS) =    6.49
  TOTAL AREA(ACRES) =        1.6        PEAK FLOW RATE(CFS) =       8.10

  END OF SUBAREA STREET FLOW HYDRAULICS:
  DEPTH(FEET) = 0.34   HALFSTREET FLOOD WIDTH(FEET) =  16.23
  FLOW VELOCITY(FEET/SEC.) =  3.09   DEPTH*VELOCITY(FT*FT/SEC.) =   1.05
  LONGEST FLOWPATH FROM NODE   2081.10 TO NODE   2082.00 =     360.00 FEET.

****************************************************************************
  FLOW PROCESS FROM NODE   2082.00 TO NODE   2082.00 IS CODE =   1
----------------------------------------------------------------------------
  >>>>>DESIGNATE INDEPENDENT STREAM FOR CONFLUENCE<<<<<
  >>>>>AND COMPUTE VARIOUS CONFLUENCED STREAM VALUES<<<<<
============================================================================
  TOTAL NUMBER OF STREAMS =  2
  CONFLUENCE VALUES USED FOR INDEPENDENT STREAM  2 ARE:
  TIME OF CONCENTRATION(MIN.) =    6.55
  RAINFALL INTENSITY(INCH/HR) =   7.09
  TOTAL STREAM AREA(ACRES) =     1.61
  PEAK FLOW RATE(CFS) AT CONFLUENCE =      8.10
```

```
  ** CONFLUENCE DATA **
  STREAM     RUNOFF       Tc      INTENSITY      AREA
  NUMBER      (CFS)     (MIN.)   (INCH/HOUR)    (ACRE)
      1       11.03     7.53        6.473         2.39
      2        8.10     6.55        7.086         1.61

  RAINFALL INTENSITY AND TIME OF CONCENTRATION RATIO
  CONFLUENCE FORMULA USED FOR  2 STREAMS.

  ** PEAK FLOW RATE TABLE **
  STREAM     RUNOFF      Tc      INTENSITY
  NUMBER      (CFS)    (MIN.)   (INCH/HOUR)
      1       17.68     6.55       7.086
      2       18.43     7.53       6.473

  COMPUTED CONFLUENCE ESTIMATES ARE AS FOLLOWS:
  PEAK FLOW RATE(CFS) =      18.43   Tc(MIN.) =    7.53
  TOTAL AREA(ACRES) =        4.0
  LONGEST FLOWPATH FROM NODE   2079.00 TO NODE   2082.00 =     500.00 FEET.

****************************************************************************
  FLOW PROCESS FROM NODE   2082.00 TO NODE   2083.00 IS CODE =  31
----------------------------------------------------------------------------
  >>>>>COMPUTE PIPE-FLOW TRAVEL TIME THRU SUBAREA<<<<<
  >>>>>USING COMPUTER-ESTIMATED PIPESIZE (NON-PRESSURE FLOW)<<<<<
============================================================================
  ELEVATION DATA: UPSTREAM(FEET) =   632.40  DOWNSTREAM(FEET) =   632.00
  FLOW LENGTH(FEET) =    40.00   MANNING'S N =  0.013
  DEPTH OF FLOW IN  24.0 INCH PIPE IS  17.1 INCHES
  PIPE-FLOW VELOCITY(FEET/SEC.) =   7.68
  ESTIMATED PIPE DIAMETER(INCH) =  24.00    NUMBER OF PIPES =   1
  PIPE-FLOW(CFS) =      18.43
  PIPE TRAVEL TIME(MIN.) =   0.09    Tc(MIN.) =    7.62
  LONGEST FLOWPATH FROM NODE   2079.00 TO NODE   2083.00 =     540.00 FEET.

****************************************************************************
  FLOW PROCESS FROM NODE   2083.00 TO NODE   2083.00 IS CODE =   1
----------------------------------------------------------------------------
  >>>>>DESIGNATE INDEPENDENT STREAM FOR CONFLUENCE<<<<<
============================================================================
  TOTAL NUMBER OF STREAMS =  2
  CONFLUENCE VALUES USED FOR INDEPENDENT STREAM  1 ARE:
  TIME OF CONCENTRATION(MIN.) =    7.62
  RAINFALL INTENSITY(INCH/HR) =   6.42
  TOTAL STREAM AREA(ACRES) =     4.00
  PEAK FLOW RATE(CFS) AT CONFLUENCE =     18.43

****************************************************************************
  FLOW PROCESS FROM NODE   2082.10 TO NODE   2082.20 IS CODE =  21
----------------------------------------------------------------------------
  >>>>>RATIONAL METHOD INITIAL SUBAREA ANALYSIS<<<<<
============================================================================
  *USER SPECIFIED(SUBAREA):
  USER-SPECIFIED RUNOFF COEFFICIENT = .7100
  S.C.S. CURVE NUMBER (AMC II) =   0
  INITIAL SUBAREA FLOW-LENGTH(FEET) =   100.00
  UPSTREAM ELEVATION(FEET) =    640.00
  DOWNSTREAM ELEVATION(FEET) =    638.00
  ELEVATION DIFFERENCE(FEET) =      2.00
  SUBAREA OVERLAND TIME OF FLOW(MIN.) =    4.984
  WARNING: INITIAL SUBAREA FLOW PATH LENGTH IS GREATER THAN
           THE MAXIMUM OVERLAND FLOW LENGTH =    80.00
           (Reference: Table 3-1B of Hydrology Manual)
```

```
          THE MAXIMUM OVERLAND FLOW LENGTH IS USED IN Tc CALCULATION!
   100 YEAR RAINFALL INTENSITY(INCH/HOUR) =  8.431
  NOTE: RAINFALL INTENSITY IS BASED ON Tc = 5-MINUTE.
  SUBAREA RUNOFF(CFS) =      1.02
  TOTAL AREA(ACRES) =      0.17   TOTAL RUNOFF(CFS) =      1.02

****************************************************************************
  FLOW PROCESS FROM NODE   2082.20 TO NODE   2082.30 IS CODE =  62
----------------------------------------------------------------------------
  >>>>>COMPUTE STREET FLOW TRAVEL TIME THRU SUBAREA<<<<<
  >>>>>(STREET TABLE SECTION #  1 USED)<<<<<
============================================================================
  UPSTREAM ELEVATION(FEET) =  638.00  DOWNSTREAM ELEVATION(FEET) =  637.00
  STREET LENGTH(FEET) =   100.00   CURB HEIGHT(INCHES) =  4.0
  STREET HALFWIDTH(FEET) = 16.00

  DISTANCE FROM CROWN TO CROSSFALL GRADEBREAK(FEET) =   8.00
  INSIDE STREET CROSSFALL(DECIMAL) =  0.020
  OUTSIDE STREET CROSSFALL(DECIMAL)  =  0.020

  SPECIFIED NUMBER OF HALFSTREETS CARRYING RUNOFF =  2
  STREET PARKWAY CROSSFALL(DECIMAL)  =  0.020
  Manning's FRICTION FACTOR for Streetflow Section(curb-to-curb) =   0.0150
  Manning's FRICTION FACTOR for Back-of-Walk Flow Section =   0.0150

    **TRAVEL TIME COMPUTED USING ESTIMATED FLOW(CFS) =       1.82
    STREETFLOW MODEL RESULTS USING ESTIMATED FLOW:
    STREET FLOW DEPTH(FEET) =  0.16
    HALFSTREET FLOOD WIDTH(FEET) =    7.29
    AVERAGE FLOW VELOCITY(FEET/SEC.) =    1.71
    PRODUCT OF DEPTH&VELOCITY(FT*FT/SEC.) =    0.28
  STREET FLOW TRAVEL TIME(MIN.) =   0.98   Tc(MIN.) =    5.96
   100 YEAR RAINFALL INTENSITY(INCH/HOUR) =  7.529
  *USER SPECIFIED(SUBAREA):
  USER-SPECIFIED RUNOFF COEFFICIENT = .7100
  S.C.S. CURVE NUMBER (AMC II) =   0
  AREA-AVERAGE RUNOFF COEFFICIENT =  0.710
  SUBAREA AREA(ACRES) =    0.30      SUBAREA RUNOFF(CFS) =    1.60
  TOTAL AREA(ACRES) =        0.5        PEAK FLOW RATE(CFS) =       2.51

  END OF SUBAREA STREET FLOW HYDRAULICS:
  DEPTH(FEET) = 0.18   HALFSTREET FLOOD WIDTH(FEET) =   8.22
  FLOW VELOCITY(FEET/SEC.) =  1.86   DEPTH*VELOCITY(FT*FT/SEC.) =   0.34
  LONGEST FLOWPATH FROM NODE   2082.10 TO NODE   2082.30 =     200.00 FEET.

****************************************************************************
  FLOW PROCESS FROM NODE   2082.30 TO NODE   2083.00 IS CODE =  31
----------------------------------------------------------------------------
  >>>>>COMPUTE PIPE-FLOW TRAVEL TIME THRU SUBAREA<<<<<
  >>>>>USING COMPUTER-ESTIMATED PIPESIZE (NON-PRESSURE FLOW)<<<<<
============================================================================
  ELEVATION DATA: UPSTREAM(FEET) =   632.30  DOWNSTREAM(FEET) =   632.00
  FLOW LENGTH(FEET) =    30.00   MANNING'S N =  0.013
  DEPTH OF FLOW IN  12.0 INCH PIPE IS   7.7 INCHES
  PIPE-FLOW VELOCITY(FEET/SEC.) =   4.72
  ESTIMATED PIPE DIAMETER(INCH) =  12.00    NUMBER OF PIPES =   1
  PIPE-FLOW(CFS) =       2.51
  PIPE TRAVEL TIME(MIN.) =   0.11    Tc(MIN.) =    6.07
  LONGEST FLOWPATH FROM NODE   2082.10 TO NODE   2083.00 =     230.00 FEET.

****************************************************************************
  FLOW PROCESS FROM NODE   2083.00 TO NODE   2083.00 IS CODE =   1
----------------------------------------------------------------------------
```

```
  >>>>>DESIGNATE INDEPENDENT STREAM FOR CONFLUENCE<<<<<
  >>>>>AND COMPUTE VARIOUS CONFLUENCED STREAM VALUES<<<<<
==============================================================================
  TOTAL NUMBER OF STREAMS =  2
  CONFLUENCE VALUES USED FOR INDEPENDENT STREAM  2 ARE:
  TIME OF CONCENTRATION(MIN.) =    6.07
  RAINFALL INTENSITY(INCH/HR) =   7.44
  TOTAL STREAM AREA(ACRES) =     0.47
  PEAK FLOW RATE(CFS) AT CONFLUENCE =      2.51

  ** CONFLUENCE DATA **
  STREAM     RUNOFF       Tc      INTENSITY      AREA
  NUMBER      (CFS)     (MIN.)   (INCH/HOUR)    (ACRE)
      1       18.43     7.62        6.425          4.00
      2        2.51     6.07        7.444          0.47

  RAINFALL INTENSITY AND TIME OF CONCENTRATION RATIO
  CONFLUENCE FORMULA USED FOR  2 STREAMS.

  ** PEAK FLOW RATE TABLE **
  STREAM     RUNOFF      Tc      INTENSITY
  NUMBER      (CFS)    (MIN.)   (INCH/HOUR)
      1       18.42     6.07       7.444
      2       20.60     7.62       6.425

  COMPUTED CONFLUENCE ESTIMATES ARE AS FOLLOWS:
  PEAK FLOW RATE(CFS) =      20.60   Tc(MIN.) =    7.62
  TOTAL AREA(ACRES) =        4.5
  LONGEST FLOWPATH FROM NODE   2079.00 TO NODE   2083.00 =     540.00 FEET.

****************************************************************************
  FLOW PROCESS FROM NODE   2083.00 TO NODE   2076.50 IS CODE =  31
----------------------------------------------------------------------------
  >>>>>COMPUTE PIPE-FLOW TRAVEL TIME THRU SUBAREA<<<<<
  >>>>>USING COMPUTER-ESTIMATED PIPESIZE (NON-PRESSURE FLOW)<<<<<
==============================================================================
  ELEVATION DATA: UPSTREAM(FEET) =   632.00  DOWNSTREAM(FEET) =   631.00
  FLOW LENGTH(FEET) =    25.00   MANNING'S N =  0.013
  DEPTH OF FLOW IN  21.0 INCH PIPE IS  12.8 INCHES
  PIPE-FLOW VELOCITY(FEET/SEC.) =  13.46
  ESTIMATED PIPE DIAMETER(INCH) =  21.00    NUMBER OF PIPES =   1
  PIPE-FLOW(CFS) =      20.60
  PIPE TRAVEL TIME(MIN.) =   0.03    Tc(MIN.) =    7.65
  LONGEST FLOWPATH FROM NODE   2079.00 TO NODE   2076.50 =     565.00 FEET.

****************************************************************************
  FLOW PROCESS FROM NODE   2076.50 TO NODE   2077.00 IS CODE =  52
----------------------------------------------------------------------------
  >>>>>COMPUTE NATURAL VALLEY CHANNEL FLOW<<<<<
  >>>>>TRAVELTIME THRU SUBAREA<<<<<
==============================================================================
  ELEVATION DATA: UPSTREAM(FEET) =    631.00  DOWNSTREAM(FEET) =    629.00
  CHANNEL LENGTH THRU SUBAREA(FEET) =   100.00   CHANNEL SLOPE =  0.0200
  CHANNEL FLOW THRU SUBAREA(CFS) =      20.60
  FLOW VELOCITY(FEET/SEC) =   4.27 (PER LACFCD/RCFC&WCD HYDROLOGY MANUAL)
  TRAVEL TIME(MIN.) =   0.39   Tc(MIN.) =    8.04
  LONGEST FLOWPATH FROM NODE   2079.00 TO NODE   2077.00 =     665.00 FEET.

****************************************************************************
  FLOW PROCESS FROM NODE   2077.00 TO NODE   2077.00 IS CODE =  11
----------------------------------------------------------------------------
  >>>>>CONFLUENCE MEMORY BANK # 1 WITH THE MAIN-STREAM MEMORY<<<<<
==============================================================================
```

```
  ** MAIN STREAM CONFLUENCE DATA **
  STREAM     RUNOFF      Tc      INTENSITY     AREA
  NUMBER      (CFS)    (MIN.)   (INCH/HOUR)   (ACRE)
      1       20.60     8.04       6.206        4.47
  LONGEST FLOWPATH FROM NODE   2079.00 TO NODE   2077.00 =     665.00 FEET.

  ** MEMORY BANK #  1 CONFLUENCE DATA **
  STREAM     RUNOFF      Tc      INTENSITY     AREA
  NUMBER      (CFS)    (MIN.)   (INCH/HOUR)   (ACRE)
      1      326.86    11.20       5.011      129.39
  LONGEST FLOWPATH FROM NODE   2001.00 TO NODE   2077.00 =    4240.00 FEET.

  ** PEAK FLOW RATE TABLE **
  STREAM    RUNOFF       Tc      INTENSITY
  NUMBER     (CFS)     (MIN.)   (INCH/HOUR)
      1     255.24       8.04        6.206
      2     343.49      11.20        5.011

  COMPUTED CONFLUENCE ESTIMATES ARE AS FOLLOWS:
  PEAK FLOW RATE(CFS) =     343.49   Tc(MIN.) =   11.20
  TOTAL AREA(ACRES) =      133.9

****************************************************************************
  FLOW PROCESS FROM NODE   2077.00 TO NODE   2077.00 IS CODE =  12
----------------------------------------------------------------------------
  >>>>>CLEAR MEMORY BANK # 1 <<<<<
============================================================================

****************************************************************************
  FLOW PROCESS FROM NODE   2077.00 TO NODE   2078.00 IS CODE =  31
----------------------------------------------------------------------------
  >>>>>COMPUTE PIPE-FLOW TRAVEL TIME THRU SUBAREA<<<<<
  >>>>>USING COMPUTER-ESTIMATED PIPESIZE (NON-PRESSURE FLOW)<<<<<
============================================================================
  ELEVATION DATA: UPSTREAM(FEET) =   629.00  DOWNSTREAM(FEET) =   627.50
  FLOW LENGTH(FEET) =   115.00   MANNING'S N =  0.013
  DEPTH OF FLOW IN  66.0 INCH PIPE IS  51.1 INCHES
  PIPE-FLOW VELOCITY(FEET/SEC.) =  17.42
  ESTIMATED PIPE DIAMETER(INCH) =  66.00    NUMBER OF PIPES =   1
  PIPE-FLOW(CFS) =     343.49
  PIPE TRAVEL TIME(MIN.) =   0.11    Tc(MIN.) =   11.31
  LONGEST FLOWPATH FROM NODE   2001.00 TO NODE   2078.00 =    4355.00 FEET.

****************************************************************************
  FLOW PROCESS FROM NODE   2078.00 TO NODE   2102.00 IS CODE =  51
----------------------------------------------------------------------------
  >>>>>COMPUTE TRAPEZOIDAL CHANNEL FLOW<<<<<
  >>>>>TRAVELTIME THRU SUBAREA (EXISTING ELEMENT)<<<<<
============================================================================
  ELEVATION DATA: UPSTREAM(FEET) =    627.50  DOWNSTREAM(FEET) =    626.00
  CHANNEL LENGTH THRU SUBAREA(FEET) =   275.00   CHANNEL SLOPE =  0.0055
  CHANNEL BASE(FEET) =    3.00   "Z" FACTOR =   2.000
  MANNING'S FACTOR = 0.030   MAXIMUM DEPTH(FEET) =  10.00
   100 YEAR RAINFALL INTENSITY(INCH/HOUR) =  4.787
  *USER SPECIFIED(SUBAREA):
  USER-SPECIFIED RUNOFF COEFFICIENT = .3500
  S.C.S. CURVE NUMBER (AMC II) =   0
  TRAVEL TIME COMPUTED USING ESTIMATED FLOW(CFS) =     344.59
  TRAVEL TIME THRU SUBAREA BASED ON VELOCITY(FEET/SEC.) =   6.42
  AVERAGE FLOW DEPTH(FEET) =   4.48   TRAVEL TIME(MIN.) =   0.71
  Tc(MIN.) =   12.03
  SUBAREA AREA(ACRES) =     1.31       SUBAREA RUNOFF(CFS) =    2.19
```

```
  AREA-AVERAGE RUNOFF COEFFICIENT =  0.483
  TOTAL AREA(ACRES) =      135.2         PEAK FLOW RATE(CFS) =     343.49

  END OF SUBAREA CHANNEL FLOW HYDRAULICS:
  DEPTH(FEET) =  4.48   FLOW VELOCITY(FEET/SEC.) =   6.42
  LONGEST FLOWPATH FROM NODE   2001.00 TO NODE   2102.00 =    4630.00 FEET.

****************************************************************************
  FLOW PROCESS FROM NODE   2102.00 TO NODE   2102.00 IS CODE =  10
----------------------------------------------------------------------------
  >>>>>MAIN-STREAM MEMORY COPIED ONTO MEMORY BANK # 1 <<<<<
============================================================================

****************************************************************************
  FLOW PROCESS FROM NODE   2088.00 TO NODE   2089.00 IS CODE =  21
----------------------------------------------------------------------------
  >>>>>RATIONAL METHOD INITIAL SUBAREA ANALYSIS<<<<<
============================================================================
  *USER SPECIFIED(SUBAREA):
  USER-SPECIFIED RUNOFF COEFFICIENT = .7100
  S.C.S. CURVE NUMBER (AMC II) =   0
  INITIAL SUBAREA FLOW-LENGTH(FEET) =   100.00
  UPSTREAM ELEVATION(FEET) =    698.40
  DOWNSTREAM ELEVATION(FEET) =    696.40
  ELEVATION DIFFERENCE(FEET) =      2.00
  SUBAREA OVERLAND TIME OF FLOW(MIN.) =    4.984
  WARNING: INITIAL SUBAREA FLOW PATH LENGTH IS GREATER THAN
           THE MAXIMUM OVERLAND FLOW LENGTH =    80.00
           (Reference: Table 3-1B of Hydrology Manual)
           THE MAXIMUM OVERLAND FLOW LENGTH IS USED IN Tc CALCULATION!
   100 YEAR RAINFALL INTENSITY(INCH/HOUR) =  8.431
  NOTE: RAINFALL INTENSITY IS BASED ON Tc = 5-MINUTE.
  SUBAREA RUNOFF(CFS) =      1.08
  TOTAL AREA(ACRES) =      0.18   TOTAL RUNOFF(CFS) =      1.08

****************************************************************************
  FLOW PROCESS FROM NODE   2089.00 TO NODE   2093.00 IS CODE =  62
----------------------------------------------------------------------------
  >>>>>COMPUTE STREET FLOW TRAVEL TIME THRU SUBAREA<<<<<
  >>>>>(STREET TABLE SECTION #  1 USED)<<<<<
============================================================================
  UPSTREAM ELEVATION(FEET) =  695.00  DOWNSTREAM ELEVATION(FEET) =  670.00
  STREET LENGTH(FEET) =   375.00   CURB HEIGHT(INCHES) =  4.0
  STREET HALFWIDTH(FEET) = 16.00

  DISTANCE FROM CROWN TO CROSSFALL GRADEBREAK(FEET) =   8.00
  INSIDE STREET CROSSFALL(DECIMAL) =  0.020
  OUTSIDE STREET CROSSFALL(DECIMAL)  =  0.020

  SPECIFIED NUMBER OF HALFSTREETS CARRYING RUNOFF =  1
  STREET PARKWAY CROSSFALL(DECIMAL)  =  0.020
  Manning's FRICTION FACTOR for Streetflow Section(curb-to-curb) =   0.0150
  Manning's FRICTION FACTOR for Back-of-Walk Flow Section =   0.0150

    **TRAVEL TIME COMPUTED USING ESTIMATED FLOW(CFS) =       4.13
    STREETFLOW MODEL RESULTS USING ESTIMATED FLOW:
    STREET FLOW DEPTH(FEET) =  0.20
    HALFSTREET FLOOD WIDTH(FEET) =    9.03
    AVERAGE FLOW VELOCITY(FEET/SEC.) =    5.06
    PRODUCT OF DEPTH&VELOCITY(FT*FT/SEC.) =    1.00
  STREET FLOW TRAVEL TIME(MIN.) =   1.24   Tc(MIN.) =    6.22
   100 YEAR RAINFALL INTENSITY(INCH/HOUR) =  7.324
  *USER SPECIFIED(SUBAREA):
```

```
  USER-SPECIFIED RUNOFF COEFFICIENT = .7100
  S.C.S. CURVE NUMBER (AMC II) =   0
  AREA-AVERAGE RUNOFF COEFFICIENT =  0.710
  SUBAREA AREA(ACRES) =    1.17      SUBAREA RUNOFF(CFS) =    6.08
  TOTAL AREA(ACRES) =        1.3        PEAK FLOW RATE(CFS) =       7.02

  END OF SUBAREA STREET FLOW HYDRAULICS:
  DEPTH(FEET) = 0.24   HALFSTREET FLOOD WIDTH(FEET) =  11.03
  FLOW VELOCITY(FEET/SEC.) =  5.76   DEPTH*VELOCITY(FT*FT/SEC.) =   1.38
  LONGEST FLOWPATH FROM NODE   2088.00 TO NODE   2093.00 =     475.00 FEET.

****************************************************************************
  FLOW PROCESS FROM NODE   2093.00 TO NODE   2093.00 IS CODE =   1
----------------------------------------------------------------------------
  >>>>>DESIGNATE INDEPENDENT STREAM FOR CONFLUENCE<<<<<
============================================================================
  TOTAL NUMBER OF STREAMS =  2
  CONFLUENCE VALUES USED FOR INDEPENDENT STREAM  1 ARE:
  TIME OF CONCENTRATION(MIN.) =    6.22
  RAINFALL INTENSITY(INCH/HR) =   7.32
  TOTAL STREAM AREA(ACRES) =     1.35
  PEAK FLOW RATE(CFS) AT CONFLUENCE =      7.02

****************************************************************************
  FLOW PROCESS FROM NODE   2090.00 TO NODE   2091.00 IS CODE =  21
----------------------------------------------------------------------------
  >>>>>RATIONAL METHOD INITIAL SUBAREA ANALYSIS<<<<<
============================================================================
  *USER SPECIFIED(SUBAREA):
  USER-SPECIFIED RUNOFF COEFFICIENT = .7100
  S.C.S. CURVE NUMBER (AMC II) =   0
  INITIAL SUBAREA FLOW-LENGTH(FEET) =    90.00
  UPSTREAM ELEVATION(FEET) =    695.00
  DOWNSTREAM ELEVATION(FEET) =    692.00
  ELEVATION DIFFERENCE(FEET) =      3.00
  SUBAREA OVERLAND TIME OF FLOW(MIN.) =    4.458
   100 YEAR RAINFALL INTENSITY(INCH/HOUR) =  8.431
  NOTE: RAINFALL INTENSITY IS BASED ON Tc = 5-MINUTE.
  SUBAREA RUNOFF(CFS) =      0.48
  TOTAL AREA(ACRES) =      0.08   TOTAL RUNOFF(CFS) =      0.48

****************************************************************************
  FLOW PROCESS FROM NODE   2091.00 TO NODE   2092.00 IS CODE =  62
----------------------------------------------------------------------------
  >>>>>COMPUTE STREET FLOW TRAVEL TIME THRU SUBAREA<<<<<
  >>>>>(STREET TABLE SECTION #  1 USED)<<<<<
============================================================================
  UPSTREAM ELEVATION(FEET) =  692.00  DOWNSTREAM ELEVATION(FEET) =  670.00
  STREET LENGTH(FEET) =   250.00   CURB HEIGHT(INCHES) =  4.0
  STREET HALFWIDTH(FEET) = 16.00

  DISTANCE FROM CROWN TO CROSSFALL GRADEBREAK(FEET) =   8.00
  INSIDE STREET CROSSFALL(DECIMAL) =  0.020
  OUTSIDE STREET CROSSFALL(DECIMAL)  =  0.020

  SPECIFIED NUMBER OF HALFSTREETS CARRYING RUNOFF =  1
  STREET PARKWAY CROSSFALL(DECIMAL)  =  0.020
  Manning's FRICTION FACTOR for Streetflow Section(curb-to-curb) =   0.0150
  Manning's FRICTION FACTOR for Back-of-Walk Flow Section =   0.0150

    **TRAVEL TIME COMPUTED USING ESTIMATED FLOW(CFS) =       2.41
    STREETFLOW MODEL RESULTS USING ESTIMATED FLOW:
    STREET FLOW DEPTH(FEET) =  0.16
```

```
    HALFSTREET FLOOD WIDTH(FEET) =    6.98
    AVERAGE FLOW VELOCITY(FEET/SEC.) =    4.93
    PRODUCT OF DEPTH&VELOCITY(FT*FT/SEC.) =    0.78
  STREET FLOW TRAVEL TIME(MIN.) =   0.84   Tc(MIN.) =    5.30
   100 YEAR RAINFALL INTENSITY(INCH/HOUR) =  8.117
  *USER SPECIFIED(SUBAREA):
  USER-SPECIFIED RUNOFF COEFFICIENT = .7100
  S.C.S. CURVE NUMBER (AMC II) =   0
  AREA-AVERAGE RUNOFF COEFFICIENT =  0.710
  SUBAREA AREA(ACRES) =    0.67      SUBAREA RUNOFF(CFS) =    3.86
  TOTAL AREA(ACRES) =        0.8        PEAK FLOW RATE(CFS) =       4.32

  END OF SUBAREA STREET FLOW HYDRAULICS:
  DEPTH(FEET) = 0.19   HALFSTREET FLOOD WIDTH(FEET) =   8.72
  FLOW VELOCITY(FEET/SEC.) =  5.68   DEPTH*VELOCITY(FT*FT/SEC.) =   1.09
  LONGEST FLOWPATH FROM NODE   2090.00 TO NODE   2092.00 =     340.00 FEET.

****************************************************************************
  FLOW PROCESS FROM NODE   2092.00 TO NODE   2093.00 IS CODE =  31
----------------------------------------------------------------------------
  >>>>>COMPUTE PIPE-FLOW TRAVEL TIME THRU SUBAREA<<<<<
  >>>>>USING COMPUTER-ESTIMATED PIPESIZE (NON-PRESSURE FLOW)<<<<<
============================================================================
  ELEVATION DATA: UPSTREAM(FEET) =   663.30  DOWNSTREAM(FEET) =   663.00
  FLOW LENGTH(FEET) =    30.00   MANNING'S N =  0.013
  DEPTH OF FLOW IN  15.0 INCH PIPE IS   9.3 INCHES
  PIPE-FLOW VELOCITY(FEET/SEC.) =   5.41
  ESTIMATED PIPE DIAMETER(INCH) =  15.00    NUMBER OF PIPES =   1
  PIPE-FLOW(CFS) =       4.32
  PIPE TRAVEL TIME(MIN.) =   0.09    Tc(MIN.) =    5.40
  LONGEST FLOWPATH FROM NODE   2090.00 TO NODE   2093.00 =     370.00 FEET.

****************************************************************************
  FLOW PROCESS FROM NODE   2093.00 TO NODE   2093.00 IS CODE =   1
----------------------------------------------------------------------------
  >>>>>DESIGNATE INDEPENDENT STREAM FOR CONFLUENCE<<<<<
  >>>>>AND COMPUTE VARIOUS CONFLUENCED STREAM VALUES<<<<<
============================================================================
  TOTAL NUMBER OF STREAMS =  2
  CONFLUENCE VALUES USED FOR INDEPENDENT STREAM  2 ARE:
  TIME OF CONCENTRATION(MIN.) =    5.40
  RAINFALL INTENSITY(INCH/HR) =   8.03
  TOTAL STREAM AREA(ACRES) =     0.75
  PEAK FLOW RATE(CFS) AT CONFLUENCE =      4.32

  ** CONFLUENCE DATA **
  STREAM     RUNOFF       Tc      INTENSITY      AREA
  NUMBER      (CFS)     (MIN.)   (INCH/HOUR)    (ACRE)
      1        7.02     6.22        7.324         1.35
      2        4.32     5.40        8.027         0.75

  RAINFALL INTENSITY AND TIME OF CONCENTRATION RATIO
  CONFLUENCE FORMULA USED FOR  2 STREAMS.

  ** PEAK FLOW RATE TABLE **
  STREAM     RUNOFF      Tc      INTENSITY
  NUMBER      (CFS)    (MIN.)   (INCH/HOUR)
      1       10.41     5.40       8.027
      2       10.96     6.22       7.324

  COMPUTED CONFLUENCE ESTIMATES ARE AS FOLLOWS:
  PEAK FLOW RATE(CFS) =      10.96   Tc(MIN.) =    6.22
  TOTAL AREA(ACRES) =        2.1
```

```
  LONGEST FLOWPATH FROM NODE   2088.00 TO NODE   2093.00 =     475.00 FEET.

****************************************************************************
  FLOW PROCESS FROM NODE   2093.00 TO NODE   2097.00 IS CODE =  31
----------------------------------------------------------------------------
  >>>>>COMPUTE PIPE-FLOW TRAVEL TIME THRU SUBAREA<<<<<
  >>>>>USING COMPUTER-ESTIMATED PIPESIZE (NON-PRESSURE FLOW)<<<<<
============================================================================
  ELEVATION DATA: UPSTREAM(FEET) =   663.00  DOWNSTREAM(FEET) =   632.00
  FLOW LENGTH(FEET) =   570.00   MANNING'S N =  0.013
  DEPTH OF FLOW IN  15.0 INCH PIPE IS   9.9 INCHES
  PIPE-FLOW VELOCITY(FEET/SEC.) =  12.83
  ESTIMATED PIPE DIAMETER(INCH) =  15.00    NUMBER OF PIPES =   1
  PIPE-FLOW(CFS) =      10.96
  PIPE TRAVEL TIME(MIN.) =   0.74    Tc(MIN.) =    6.96
  LONGEST FLOWPATH FROM NODE   2088.00 TO NODE   2097.00 =    1045.00 FEET.

****************************************************************************
  FLOW PROCESS FROM NODE   2097.00 TO NODE   2097.00 IS CODE =   1
----------------------------------------------------------------------------
  >>>>>DESIGNATE INDEPENDENT STREAM FOR CONFLUENCE<<<<<
============================================================================
  TOTAL NUMBER OF STREAMS =  2
  CONFLUENCE VALUES USED FOR INDEPENDENT STREAM  1 ARE:
  TIME OF CONCENTRATION(MIN.) =    6.96
  RAINFALL INTENSITY(INCH/HR) =   6.81
  TOTAL STREAM AREA(ACRES) =     2.10
  PEAK FLOW RATE(CFS) AT CONFLUENCE =     10.96

****************************************************************************
  FLOW PROCESS FROM NODE   2095.00 TO NODE   2096.00 IS CODE =  21
----------------------------------------------------------------------------
  >>>>>RATIONAL METHOD INITIAL SUBAREA ANALYSIS<<<<<
============================================================================
  *USER SPECIFIED(SUBAREA):
  USER-SPECIFIED RUNOFF COEFFICIENT = .7100
  S.C.S. CURVE NUMBER (AMC II) =   0
  INITIAL SUBAREA FLOW-LENGTH(FEET) =   100.00
  UPSTREAM ELEVATION(FEET) =    669.70
  DOWNSTREAM ELEVATION(FEET) =    667.70
  ELEVATION DIFFERENCE(FEET) =      2.00
  SUBAREA OVERLAND TIME OF FLOW(MIN.) =    4.984
  WARNING: INITIAL SUBAREA FLOW PATH LENGTH IS GREATER THAN
           THE MAXIMUM OVERLAND FLOW LENGTH =    80.00
           (Reference: Table 3-1B of Hydrology Manual)
           THE MAXIMUM OVERLAND FLOW LENGTH IS USED IN Tc CALCULATION!
   100 YEAR RAINFALL INTENSITY(INCH/HOUR) =  8.431
  NOTE: RAINFALL INTENSITY IS BASED ON Tc = 5-MINUTE.
  SUBAREA RUNOFF(CFS) =      0.78
  TOTAL AREA(ACRES) =      0.13   TOTAL RUNOFF(CFS) =      0.78

****************************************************************************
  FLOW PROCESS FROM NODE   2096.00 TO NODE   2097.00 IS CODE =  62
----------------------------------------------------------------------------
  >>>>>COMPUTE STREET FLOW TRAVEL TIME THRU SUBAREA<<<<<
  >>>>>(STREET TABLE SECTION #  1 USED)<<<<<
============================================================================
  UPSTREAM ELEVATION(FEET) =  666.00  DOWNSTREAM ELEVATION(FEET) =  638.00
  STREET LENGTH(FEET) =   520.00   CURB HEIGHT(INCHES) =  4.0
  STREET HALFWIDTH(FEET) = 16.00

  DISTANCE FROM CROWN TO CROSSFALL GRADEBREAK(FEET) =   8.00
  INSIDE STREET CROSSFALL(DECIMAL) =  0.020
```

```
  OUTSIDE STREET CROSSFALL(DECIMAL)  =  0.020

  SPECIFIED NUMBER OF HALFSTREETS CARRYING RUNOFF =  1
  STREET PARKWAY CROSSFALL(DECIMAL)  =  0.020
  Manning's FRICTION FACTOR for Streetflow Section(curb-to-curb) =   0.0150
  Manning's FRICTION FACTOR for Back-of-Walk Flow Section =   0.0150

    **TRAVEL TIME COMPUTED USING ESTIMATED FLOW(CFS) =       4.92
    STREETFLOW MODEL RESULTS USING ESTIMATED FLOW:
    STREET FLOW DEPTH(FEET) =  0.22
    HALFSTREET FLOOD WIDTH(FEET) =   10.03
    AVERAGE FLOW VELOCITY(FEET/SEC.) =    4.88
    PRODUCT OF DEPTH&VELOCITY(FT*FT/SEC.) =    1.07
  STREET FLOW TRAVEL TIME(MIN.) =   1.77   Tc(MIN.) =    6.76
   100 YEAR RAINFALL INTENSITY(INCH/HOUR) =  6.942
  *USER SPECIFIED(SUBAREA):
  USER-SPECIFIED RUNOFF COEFFICIENT = .7100
  S.C.S. CURVE NUMBER (AMC II) =   0
  AREA-AVERAGE RUNOFF COEFFICIENT =  0.710
  SUBAREA AREA(ACRES) =    1.67      SUBAREA RUNOFF(CFS) =    8.23
  TOTAL AREA(ACRES) =        1.8        PEAK FLOW RATE(CFS) =       8.87

  END OF SUBAREA STREET FLOW HYDRAULICS:
  DEPTH(FEET) = 0.27   HALFSTREET FLOOD WIDTH(FEET) =  12.53
  FLOW VELOCITY(FEET/SEC.) =  5.64   DEPTH*VELOCITY(FT*FT/SEC.) =   1.52
  LONGEST FLOWPATH FROM NODE   2095.00 TO NODE   2097.00 =     620.00 FEET.

****************************************************************************
  FLOW PROCESS FROM NODE   2097.00 TO NODE   2097.00 IS CODE =   1
----------------------------------------------------------------------------
  >>>>>DESIGNATE INDEPENDENT STREAM FOR CONFLUENCE<<<<<
  >>>>>AND COMPUTE VARIOUS CONFLUENCED STREAM VALUES<<<<<
============================================================================
  TOTAL NUMBER OF STREAMS =  2
  CONFLUENCE VALUES USED FOR INDEPENDENT STREAM  2 ARE:
  TIME OF CONCENTRATION(MIN.) =    6.76
  RAINFALL INTENSITY(INCH/HR) =   6.94
  TOTAL STREAM AREA(ACRES) =     1.80
  PEAK FLOW RATE(CFS) AT CONFLUENCE =      8.87

  ** CONFLUENCE DATA **
  STREAM     RUNOFF       Tc      INTENSITY      AREA
  NUMBER      (CFS)     (MIN.)   (INCH/HOUR)    (ACRE)
      1       10.96     6.96        6.812          2.10
      2        8.87     6.76        6.942          1.80

  RAINFALL INTENSITY AND TIME OF CONCENTRATION RATIO
  CONFLUENCE FORMULA USED FOR  2 STREAMS.

  ** PEAK FLOW RATE TABLE **
  STREAM     RUNOFF      Tc      INTENSITY
  NUMBER      (CFS)    (MIN.)   (INCH/HOUR)
      1       19.63     6.76       6.942
      2       19.67     6.96       6.812

  COMPUTED CONFLUENCE ESTIMATES ARE AS FOLLOWS:
  PEAK FLOW RATE(CFS) =      19.67   Tc(MIN.) =    6.96
  TOTAL AREA(ACRES) =        3.9
  LONGEST FLOWPATH FROM NODE   2088.00 TO NODE   2097.00 =    1045.00 FEET.

****************************************************************************
  FLOW PROCESS FROM NODE   2097.00 TO NODE   2098.00 IS CODE =  31
----------------------------------------------------------------------------
```

```
  >>>>>COMPUTE PIPE-FLOW TRAVEL TIME THRU SUBAREA<<<<<
  >>>>>USING COMPUTER-ESTIMATED PIPESIZE (NON-PRESSURE FLOW)<<<<<
==============================================================================
  ELEVATION DATA: UPSTREAM(FEET) =   636.00  DOWNSTREAM(FEET) =   635.70
  FLOW LENGTH(FEET) =    30.00   MANNING'S N =  0.013
  DEPTH OF FLOW IN  24.0 INCH PIPE IS  18.1 INCHES
  PIPE-FLOW VELOCITY(FEET/SEC.) =   7.75
  ESTIMATED PIPE DIAMETER(INCH) =  24.00    NUMBER OF PIPES =   1
  PIPE-FLOW(CFS) =      19.67
  PIPE TRAVEL TIME(MIN.) =   0.06    Tc(MIN.) =    7.02
  LONGEST FLOWPATH FROM NODE   2088.00 TO NODE   2098.00 =    1075.00 FEET.

****************************************************************************
  FLOW PROCESS FROM NODE   2098.00 TO NODE   2098.00 IS CODE =   1
----------------------------------------------------------------------------
  >>>>>DESIGNATE INDEPENDENT STREAM FOR CONFLUENCE<<<<<
==============================================================================
  TOTAL NUMBER OF STREAMS =  2
  CONFLUENCE VALUES USED FOR INDEPENDENT STREAM  1 ARE:
  TIME OF CONCENTRATION(MIN.) =    7.02
  RAINFALL INTENSITY(INCH/HR) =   6.77
  TOTAL STREAM AREA(ACRES) =     3.90
  PEAK FLOW RATE(CFS) AT CONFLUENCE =     19.67

****************************************************************************
  FLOW PROCESS FROM NODE   2094.50 TO NODE   2094.00 IS CODE =  21
----------------------------------------------------------------------------
  >>>>>RATIONAL METHOD INITIAL SUBAREA ANALYSIS<<<<<
==============================================================================
  *USER SPECIFIED(SUBAREA):
  USER-SPECIFIED RUNOFF COEFFICIENT = .7100
  S.C.S. CURVE NUMBER (AMC II) =   0
  INITIAL SUBAREA FLOW-LENGTH(FEET) =   100.00
  UPSTREAM ELEVATION(FEET) =    672.80
  DOWNSTREAM ELEVATION(FEET) =    670.80
  ELEVATION DIFFERENCE(FEET) =      2.00
  SUBAREA OVERLAND TIME OF FLOW(MIN.) =    4.984
  WARNING: INITIAL SUBAREA FLOW PATH LENGTH IS GREATER THAN
           THE MAXIMUM OVERLAND FLOW LENGTH =    80.00
           (Reference: Table 3-1B of Hydrology Manual)
           THE MAXIMUM OVERLAND FLOW LENGTH IS USED IN Tc CALCULATION!
   100 YEAR RAINFALL INTENSITY(INCH/HOUR) =  8.431
  NOTE: RAINFALL INTENSITY IS BASED ON Tc = 5-MINUTE.
  SUBAREA RUNOFF(CFS) =      0.66
  TOTAL AREA(ACRES) =      0.11   TOTAL RUNOFF(CFS) =      0.66

****************************************************************************
  FLOW PROCESS FROM NODE   2094.00 TO NODE   2098.00 IS CODE =  62
----------------------------------------------------------------------------
  >>>>>COMPUTE STREET FLOW TRAVEL TIME THRU SUBAREA<<<<<
  >>>>>(STREET TABLE SECTION #  1 USED)<<<<<
==============================================================================
  UPSTREAM ELEVATION(FEET) =  668.00  DOWNSTREAM ELEVATION(FEET) =  638.00
  STREET LENGTH(FEET) =   475.00   CURB HEIGHT(INCHES) =  4.0
  STREET HALFWIDTH(FEET) = 16.00

  DISTANCE FROM CROWN TO CROSSFALL GRADEBREAK(FEET) =   8.00
  INSIDE STREET CROSSFALL(DECIMAL) =  0.020
  OUTSIDE STREET CROSSFALL(DECIMAL)  =  0.020

  SPECIFIED NUMBER OF HALFSTREETS CARRYING RUNOFF =  1
  STREET PARKWAY CROSSFALL(DECIMAL)  =  0.020
  Manning's FRICTION FACTOR for Streetflow Section(curb-to-curb) =   0.0150
```

```
  Manning's FRICTION FACTOR for Back-of-Walk Flow Section =   0.0150

    **TRAVEL TIME COMPUTED USING ESTIMATED FLOW(CFS) =       3.80
    STREETFLOW MODEL RESULTS USING ESTIMATED FLOW:
    STREET FLOW DEPTH(FEET) =  0.19
    HALFSTREET FLOOD WIDTH(FEET) =    8.84
    AVERAGE FLOW VELOCITY(FEET/SEC.) =    4.85
    PRODUCT OF DEPTH&VELOCITY(FT*FT/SEC.) =    0.95
  STREET FLOW TRAVEL TIME(MIN.) =   1.63   Tc(MIN.) =    6.62
   100 YEAR RAINFALL INTENSITY(INCH/HOUR) =  7.038
  *USER SPECIFIED(SUBAREA):
  USER-SPECIFIED RUNOFF COEFFICIENT = .7100
  S.C.S. CURVE NUMBER (AMC II) =   0
  AREA-AVERAGE RUNOFF COEFFICIENT =  0.710
  SUBAREA AREA(ACRES) =    1.25      SUBAREA RUNOFF(CFS) =    6.25
  TOTAL AREA(ACRES) =        1.4        PEAK FLOW RATE(CFS) =       6.80

  END OF SUBAREA STREET FLOW HYDRAULICS:
  DEPTH(FEET) = 0.24   HALFSTREET FLOOD WIDTH(FEET) =  10.97
  FLOW VELOCITY(FEET/SEC.) =  5.64   DEPTH*VELOCITY(FT*FT/SEC.) =   1.34
  LONGEST FLOWPATH FROM NODE   2094.50 TO NODE   2098.00 =     575.00 FEET.

****************************************************************************
  FLOW PROCESS FROM NODE   2098.00 TO NODE   2098.00 IS CODE =   1
----------------------------------------------------------------------------
  >>>>>DESIGNATE INDEPENDENT STREAM FOR CONFLUENCE<<<<<
  >>>>>AND COMPUTE VARIOUS CONFLUENCED STREAM VALUES<<<<<
============================================================================
  TOTAL NUMBER OF STREAMS =  2
  CONFLUENCE VALUES USED FOR INDEPENDENT STREAM  2 ARE:
  TIME OF CONCENTRATION(MIN.) =    6.62
  RAINFALL INTENSITY(INCH/HR) =   7.04
  TOTAL STREAM AREA(ACRES) =     1.36
  PEAK FLOW RATE(CFS) AT CONFLUENCE =      6.80

  ** CONFLUENCE DATA **
  STREAM     RUNOFF       Tc      INTENSITY      AREA
  NUMBER      (CFS)     (MIN.)   (INCH/HOUR)    (ACRE)
      1       19.67     7.02        6.771          3.90
      2        6.80     6.62        7.038          1.36

  RAINFALL INTENSITY AND TIME OF CONCENTRATION RATIO
  CONFLUENCE FORMULA USED FOR  2 STREAMS.

  ** PEAK FLOW RATE TABLE **
  STREAM     RUNOFF      Tc      INTENSITY
  NUMBER      (CFS)    (MIN.)   (INCH/HOUR)
      1       25.72     6.62       7.038
      2       26.21     7.02       6.771

  COMPUTED CONFLUENCE ESTIMATES ARE AS FOLLOWS:
  PEAK FLOW RATE(CFS) =      26.21   Tc(MIN.) =    7.02
  TOTAL AREA(ACRES) =        5.3
  LONGEST FLOWPATH FROM NODE   2088.00 TO NODE   2098.00 =    1075.00 FEET.

****************************************************************************
  FLOW PROCESS FROM NODE   2098.00 TO NODE   2100.00 IS CODE =  31
----------------------------------------------------------------------------
  >>>>>COMPUTE PIPE-FLOW TRAVEL TIME THRU SUBAREA<<<<<
  >>>>>USING COMPUTER-ESTIMATED PIPESIZE (NON-PRESSURE FLOW)<<<<<
============================================================================
  ELEVATION DATA: UPSTREAM(FEET) =   635.70  DOWNSTREAM(FEET) =   635.00
  FLOW LENGTH(FEET) =    65.00   MANNING'S N =  0.013
```

```
  DEPTH OF FLOW IN  27.0 INCH PIPE IS  19.3 INCHES
  PIPE-FLOW VELOCITY(FEET/SEC.) =   8.62
  ESTIMATED PIPE DIAMETER(INCH) =  27.00    NUMBER OF PIPES =   1
  PIPE-FLOW(CFS) =      26.21
  PIPE TRAVEL TIME(MIN.) =   0.13    Tc(MIN.) =    7.15
  LONGEST FLOWPATH FROM NODE   2088.00 TO NODE   2100.00 =    1140.00 FEET.

****************************************************************************
  FLOW PROCESS FROM NODE   2100.00 TO NODE   2100.00 IS CODE =   1
----------------------------------------------------------------------------
  >>>>>DESIGNATE INDEPENDENT STREAM FOR CONFLUENCE<<<<<
============================================================================
  TOTAL NUMBER OF STREAMS =  2
  CONFLUENCE VALUES USED FOR INDEPENDENT STREAM  1 ARE:
  TIME OF CONCENTRATION(MIN.) =    7.15
  RAINFALL INTENSITY(INCH/HR) =   6.69
  TOTAL STREAM AREA(ACRES) =     5.26
  PEAK FLOW RATE(CFS) AT CONFLUENCE =     26.21

****************************************************************************
  FLOW PROCESS FROM NODE   2084.00 TO NODE   2085.00 IS CODE =  21
----------------------------------------------------------------------------
  >>>>>RATIONAL METHOD INITIAL SUBAREA ANALYSIS<<<<<
============================================================================
  *USER SPECIFIED(SUBAREA):
  USER-SPECIFIED RUNOFF COEFFICIENT = .7100
  S.C.S. CURVE NUMBER (AMC II) =   0
  INITIAL SUBAREA FLOW-LENGTH(FEET) =   100.00
  UPSTREAM ELEVATION(FEET) =    695.60
  DOWNSTREAM ELEVATION(FEET) =    693.60
  ELEVATION DIFFERENCE(FEET) =      2.00
  SUBAREA OVERLAND TIME OF FLOW(MIN.) =    4.984
  WARNING: INITIAL SUBAREA FLOW PATH LENGTH IS GREATER THAN
           THE MAXIMUM OVERLAND FLOW LENGTH =    80.00
           (Reference: Table 3-1B of Hydrology Manual)
           THE MAXIMUM OVERLAND FLOW LENGTH IS USED IN Tc CALCULATION!
   100 YEAR RAINFALL INTENSITY(INCH/HOUR) =  8.431
  NOTE: RAINFALL INTENSITY IS BASED ON Tc = 5-MINUTE.
  SUBAREA RUNOFF(CFS) =      0.96
  TOTAL AREA(ACRES) =      0.16   TOTAL RUNOFF(CFS) =      0.96

****************************************************************************
  FLOW PROCESS FROM NODE   2085.00 TO NODE   2086.00 IS CODE =  62
----------------------------------------------------------------------------
  >>>>>COMPUTE STREET FLOW TRAVEL TIME THRU SUBAREA<<<<<
  >>>>>(STREET TABLE SECTION #  1 USED)<<<<<
============================================================================
  UPSTREAM ELEVATION(FEET) =  693.60  DOWNSTREAM ELEVATION(FEET) =  683.00
  STREET LENGTH(FEET) =   300.00   CURB HEIGHT(INCHES) =  4.0
  STREET HALFWIDTH(FEET) = 16.00

  DISTANCE FROM CROWN TO CROSSFALL GRADEBREAK(FEET) =   8.00
  INSIDE STREET CROSSFALL(DECIMAL) =  0.020
  OUTSIDE STREET CROSSFALL(DECIMAL)  =  0.020

  SPECIFIED NUMBER OF HALFSTREETS CARRYING RUNOFF =  2
  STREET PARKWAY CROSSFALL(DECIMAL)  =  0.020
  Manning's FRICTION FACTOR for Streetflow Section(curb-to-curb) =   0.0150
  Manning's FRICTION FACTOR for Back-of-Walk Flow Section =   0.0150

    **TRAVEL TIME COMPUTED USING ESTIMATED FLOW(CFS) =       7.59
    STREETFLOW MODEL RESULTS USING ESTIMATED FLOW:
    STREET FLOW DEPTH(FEET) =  0.21
```

```
    HALFSTREET FLOOD WIDTH(FEET) =    9.84
    AVERAGE FLOW VELOCITY(FEET/SEC.) =    3.91
    PRODUCT OF DEPTH&VELOCITY(FT*FT/SEC.) =    0.84
  STREET FLOW TRAVEL TIME(MIN.) =   1.28   Tc(MIN.) =    6.26
   100 YEAR RAINFALL INTENSITY(INCH/HOUR) =  7.292
  *USER SPECIFIED(SUBAREA):
  USER-SPECIFIED RUNOFF COEFFICIENT = .7100
  S.C.S. CURVE NUMBER (AMC II) =   0
  AREA-AVERAGE RUNOFF COEFFICIENT =  0.710
  SUBAREA AREA(ACRES) =    2.55      SUBAREA RUNOFF(CFS) =   13.20
  TOTAL AREA(ACRES) =        2.7        PEAK FLOW RATE(CFS) =      14.03

  END OF SUBAREA STREET FLOW HYDRAULICS:
  DEPTH(FEET) = 0.27   HALFSTREET FLOOD WIDTH(FEET) =  12.41
  FLOW VELOCITY(FEET/SEC.) =  4.55   DEPTH*VELOCITY(FT*FT/SEC.) =   1.21
  LONGEST FLOWPATH FROM NODE   2084.00 TO NODE   2086.00 =     400.00 FEET.

****************************************************************************
  FLOW PROCESS FROM NODE   2086.00 TO NODE   2087.00 IS CODE =  31
----------------------------------------------------------------------------
  >>>>>COMPUTE PIPE-FLOW TRAVEL TIME THRU SUBAREA<<<<<
  >>>>>USING COMPUTER-ESTIMATED PIPESIZE (NON-PRESSURE FLOW)<<<<<
============================================================================
  ELEVATION DATA: UPSTREAM(FEET) =   677.00  DOWNSTREAM(FEET) =   676.00
  FLOW LENGTH(FEET) =   100.00   MANNING'S N =  0.013
  DEPTH OF FLOW IN  21.0 INCH PIPE IS  16.1 INCHES
  PIPE-FLOW VELOCITY(FEET/SEC.) =   7.10
  ESTIMATED PIPE DIAMETER(INCH) =  21.00    NUMBER OF PIPES =   1
  PIPE-FLOW(CFS) =      14.03
  PIPE TRAVEL TIME(MIN.) =   0.23    Tc(MIN.) =    6.50
  LONGEST FLOWPATH FROM NODE   2084.00 TO NODE   2087.00 =     500.00 FEET.

****************************************************************************
  FLOW PROCESS FROM NODE   2087.00 TO NODE   2100.00 IS CODE =  31
----------------------------------------------------------------------------
  >>>>>COMPUTE PIPE-FLOW TRAVEL TIME THRU SUBAREA<<<<<
  >>>>>USING COMPUTER-ESTIMATED PIPESIZE (NON-PRESSURE FLOW)<<<<<
============================================================================
  ELEVATION DATA: UPSTREAM(FEET) =   676.00  DOWNSTREAM(FEET) =   635.00
  FLOW LENGTH(FEET) =   175.00   MANNING'S N =  0.013
  DEPTH OF FLOW IN  12.0 INCH PIPE IS   8.6 INCHES
  PIPE-FLOW VELOCITY(FEET/SEC.) =  23.41
  ESTIMATED PIPE DIAMETER(INCH) =  12.00    NUMBER OF PIPES =   1
  PIPE-FLOW(CFS) =      14.03
  PIPE TRAVEL TIME(MIN.) =   0.12    Tc(MIN.) =    6.62
  LONGEST FLOWPATH FROM NODE   2084.00 TO NODE   2100.00 =     675.00 FEET.

****************************************************************************
  FLOW PROCESS FROM NODE   2100.00 TO NODE   2100.00 IS CODE =   1
----------------------------------------------------------------------------
  >>>>>DESIGNATE INDEPENDENT STREAM FOR CONFLUENCE<<<<<
  >>>>>AND COMPUTE VARIOUS CONFLUENCED STREAM VALUES<<<<<
============================================================================
  TOTAL NUMBER OF STREAMS =  2
  CONFLUENCE VALUES USED FOR INDEPENDENT STREAM  2 ARE:
  TIME OF CONCENTRATION(MIN.) =    6.62
  RAINFALL INTENSITY(INCH/HR) =   7.03
  TOTAL STREAM AREA(ACRES) =     2.71
  PEAK FLOW RATE(CFS) AT CONFLUENCE =     14.03

  ** CONFLUENCE DATA **
  STREAM     RUNOFF       Tc      INTENSITY      AREA
  NUMBER      (CFS)     (MIN.)   (INCH/HOUR)    (ACRE)
```

```
     1       26.21     7.15        6.694          5.26
     2       14.03     6.62        7.034          2.71

  RAINFALL INTENSITY AND TIME OF CONCENTRATION RATIO
  CONFLUENCE FORMULA USED FOR  2 STREAMS.

  ** PEAK FLOW RATE TABLE **
  STREAM     RUNOFF      Tc      INTENSITY
  NUMBER      (CFS)    (MIN.)   (INCH/HOUR)
     1       38.97     6.62       7.034
     2       39.56     7.15       6.694

  COMPUTED CONFLUENCE ESTIMATES ARE AS FOLLOWS:
  PEAK FLOW RATE(CFS) =      39.56   Tc(MIN.) =    7.15
  TOTAL AREA(ACRES) =        8.0
  LONGEST FLOWPATH FROM NODE   2088.00 TO NODE   2100.00 =    1140.00 FEET.

****************************************************************************
  FLOW PROCESS FROM NODE   2100.00 TO NODE   2101.00 IS CODE =  51
----------------------------------------------------------------------------
  >>>>>COMPUTE TRAPEZOIDAL CHANNEL FLOW<<<<<
  >>>>>TRAVELTIME THRU SUBAREA (EXISTING ELEMENT)<<<<<
============================================================================
  ELEVATION DATA: UPSTREAM(FEET) =    635.00  DOWNSTREAM(FEET) =    634.50
  CHANNEL LENGTH THRU SUBAREA(FEET) =    50.00   CHANNEL SLOPE =  0.0100
  CHANNEL BASE(FEET) =    3.00   "Z" FACTOR =   2.000
  MANNING'S FACTOR = 0.030   MAXIMUM DEPTH(FEET) =  10.00
   100 YEAR RAINFALL INTENSITY(INCH/HOUR) =  6.589
  *USER SPECIFIED(SUBAREA):
  USER-SPECIFIED RUNOFF COEFFICIENT = .3500
  S.C.S. CURVE NUMBER (AMC II) =   0
  TRAVEL TIME COMPUTED USING ESTIMATED FLOW(CFS) =      42.17
  TRAVEL TIME THRU SUBAREA BASED ON VELOCITY(FEET/SEC.) =   4.69
  AVERAGE FLOW DEPTH(FEET) =   1.50   TRAVEL TIME(MIN.) =   0.18
  Tc(MIN.) =    7.33
  SUBAREA AREA(ACRES) =     2.26       SUBAREA RUNOFF(CFS) =    5.21
  AREA-AVERAGE RUNOFF COEFFICIENT =  0.630
  TOTAL AREA(ACRES) =       10.2         PEAK FLOW RATE(CFS) =      42.50

  END OF SUBAREA CHANNEL FLOW HYDRAULICS:
  DEPTH(FEET) =  1.50   FLOW VELOCITY(FEET/SEC.) =   4.72
  LONGEST FLOWPATH FROM NODE   2088.00 TO NODE   2101.00 =    1190.00 FEET.

****************************************************************************
  FLOW PROCESS FROM NODE   2100.00 TO NODE   2101.00 IS CODE =  31
----------------------------------------------------------------------------
  >>>>>COMPUTE PIPE-FLOW TRAVEL TIME THRU SUBAREA<<<<<
  >>>>>USING COMPUTER-ESTIMATED PIPESIZE (NON-PRESSURE FLOW)<<<<<
============================================================================
  ELEVATION DATA: UPSTREAM(FEET) =   634.50  DOWNSTREAM(FEET) =   631.00
  FLOW LENGTH(FEET) =    35.00   MANNING'S N =  0.013
  DEPTH OF FLOW IN  21.0 INCH PIPE IS  15.5 INCHES
  PIPE-FLOW VELOCITY(FEET/SEC.) =  22.35
  ESTIMATED PIPE DIAMETER(INCH) =  21.00    NUMBER OF PIPES =   1
  PIPE-FLOW(CFS) =      42.50
  PIPE TRAVEL TIME(MIN.) =   0.03    Tc(MIN.) =    7.35
  LONGEST FLOWPATH FROM NODE   2088.00 TO NODE   2101.00 =    1225.00 FEET.

****************************************************************************
  FLOW PROCESS FROM NODE   2101.00 TO NODE   2102.00 IS CODE =  52
----------------------------------------------------------------------------
  >>>>>COMPUTE NATURAL VALLEY CHANNEL FLOW<<<<<
  >>>>>TRAVELTIME THRU SUBAREA<<<<<
```

```
==============================================================================
  ELEVATION DATA: UPSTREAM(FEET) =    631.00  DOWNSTREAM(FEET) =    626.00
  CHANNEL LENGTH THRU SUBAREA(FEET) =   240.00   CHANNEL SLOPE =  0.0208
  CHANNEL FLOW THRU SUBAREA(CFS) =      42.50
  FLOW VELOCITY(FEET/SEC) =   5.33 (PER LACFCD/RCFC&WCD HYDROLOGY MANUAL)
  TRAVEL TIME(MIN.) =   0.75   Tc(MIN.) =    8.10
  LONGEST FLOWPATH FROM NODE   2088.00 TO NODE   2102.00 =    1465.00 FEET.

****************************************************************************
  FLOW PROCESS FROM NODE   2102.00 TO NODE   2102.00 IS CODE =   1
----------------------------------------------------------------------------
  >>>>>DESIGNATE INDEPENDENT STREAM FOR CONFLUENCE<<<<<
==============================================================================
  TOTAL NUMBER OF STREAMS =  2
  CONFLUENCE VALUES USED FOR INDEPENDENT STREAM  1 ARE:
  TIME OF CONCENTRATION(MIN.) =    8.10
  RAINFALL INTENSITY(INCH/HR) =   6.17
  TOTAL STREAM AREA(ACRES) =    10.23
  PEAK FLOW RATE(CFS) AT CONFLUENCE =     42.50

****************************************************************************
  FLOW PROCESS FROM NODE   2103.00 TO NODE   2103.00 IS CODE =   7
----------------------------------------------------------------------------
  >>>>>USER SPECIFIED HYDROLOGY INFORMATION AT NODE<<<<<
==============================================================================
  USER-SPECIFIED VALUES ARE AS FOLLOWS:
  TC(MIN) =  10.00   RAIN INTENSITY(INCH/HOUR) =  5.39
  TOTAL AREA(ACRES) =    14.53   TOTAL RUNOFF(CFS) =     16.20

****************************************************************************
  FLOW PROCESS FROM NODE   2103.00 TO NODE   2102.50 IS CODE =  31
----------------------------------------------------------------------------
  >>>>>COMPUTE PIPE-FLOW TRAVEL TIME THRU SUBAREA<<<<<
  >>>>>USING COMPUTER-ESTIMATED PIPESIZE (NON-PRESSURE FLOW)<<<<<
==============================================================================
  ELEVATION DATA: UPSTREAM(FEET) =   638.80  DOWNSTREAM(FEET) =   627.00
  FLOW LENGTH(FEET) =   425.00   MANNING'S N =  0.013
  DEPTH OF FLOW IN  18.0 INCH PIPE IS  14.4 INCHES
  PIPE-FLOW VELOCITY(FEET/SEC.) =  10.71
  ESTIMATED PIPE DIAMETER(INCH) =  18.00    NUMBER OF PIPES =   1
  PIPE-FLOW(CFS) =      16.20
  PIPE TRAVEL TIME(MIN.) =   0.66    Tc(MIN.) =   10.66
  LONGEST FLOWPATH FROM NODE   2084.00 TO NODE   2102.50 =    1100.00 FEET.

****************************************************************************
  FLOW PROCESS FROM NODE   2102.50 TO NODE   2102.00 IS CODE =  52
----------------------------------------------------------------------------
  >>>>>COMPUTE NATURAL VALLEY CHANNEL FLOW<<<<<
  >>>>>TRAVELTIME THRU SUBAREA<<<<<
==============================================================================
  ELEVATION DATA: UPSTREAM(FEET) =    627.00  DOWNSTREAM(FEET) =    626.00
  CHANNEL LENGTH THRU SUBAREA(FEET) =   120.00   CHANNEL SLOPE =  0.0083
  CHANNEL FLOW THRU SUBAREA(CFS) =      16.20
  FLOW VELOCITY(FEET/SEC) =   2.59 (PER LACFCD/RCFC&WCD HYDROLOGY MANUAL)
  TRAVEL TIME(MIN.) =   0.77   Tc(MIN.) =   11.43
  LONGEST FLOWPATH FROM NODE   2084.00 TO NODE   2102.00 =    1220.00 FEET.

****************************************************************************
  FLOW PROCESS FROM NODE   2102.00 TO NODE   2102.00 IS CODE =   1
----------------------------------------------------------------------------
  >>>>>DESIGNATE INDEPENDENT STREAM FOR CONFLUENCE<<<<<
  >>>>>AND COMPUTE VARIOUS CONFLUENCED STREAM VALUES<<<<<
==============================================================================
```

```
  TOTAL NUMBER OF STREAMS =  2
  CONFLUENCE VALUES USED FOR INDEPENDENT STREAM  2 ARE:
  TIME OF CONCENTRATION(MIN.) =   11.43
  RAINFALL INTENSITY(INCH/HR) =   4.94
  TOTAL STREAM AREA(ACRES) =    14.53
  PEAK FLOW RATE(CFS) AT CONFLUENCE =     16.20

  ** CONFLUENCE DATA **
  STREAM     RUNOFF       Tc      INTENSITY      AREA
  NUMBER      (CFS)     (MIN.)   (INCH/HOUR)    (ACRE)
      1       42.50     8.10        6.175         10.23
      2       16.20    11.43        4.945         14.53

  RAINFALL INTENSITY AND TIME OF CONCENTRATION RATIO
  CONFLUENCE FORMULA USED FOR  2 STREAMS.

  ** PEAK FLOW RATE TABLE **
  STREAM     RUNOFF      Tc      INTENSITY
  NUMBER      (CFS)    (MIN.)   (INCH/HOUR)
      1       53.98     8.10       6.175
      2       50.23    11.43       4.945

  COMPUTED CONFLUENCE ESTIMATES ARE AS FOLLOWS:
  PEAK FLOW RATE(CFS) =      53.98   Tc(MIN.) =    8.10
  TOTAL AREA(ACRES) =       24.8
  LONGEST FLOWPATH FROM NODE   2088.00 TO NODE   2102.00 =    1465.00 FEET.

****************************************************************************
  FLOW PROCESS FROM NODE   2102.00 TO NODE   2102.00 IS CODE =  11
----------------------------------------------------------------------------
  >>>>>CONFLUENCE MEMORY BANK # 1 WITH THE MAIN-STREAM MEMORY<<<<<
============================================================================

  ** MAIN STREAM CONFLUENCE DATA **
  STREAM     RUNOFF      Tc      INTENSITY     AREA
  NUMBER      (CFS)    (MIN.)   (INCH/HOUR)   (ACRE)
      1       53.98     8.10       6.175       24.76
  LONGEST FLOWPATH FROM NODE   2088.00 TO NODE   2102.00 =    1465.00 FEET.

  ** MEMORY BANK #  1 CONFLUENCE DATA **
  STREAM     RUNOFF      Tc      INTENSITY     AREA
  NUMBER      (CFS)    (MIN.)   (INCH/HOUR)   (ACRE)
      1      343.49    12.03       4.787      135.17
  LONGEST FLOWPATH FROM NODE   2001.00 TO NODE   2102.00 =    4630.00 FEET.

  ** PEAK FLOW RATE TABLE **
  STREAM    RUNOFF       Tc      INTENSITY
  NUMBER     (CFS)     (MIN.)   (INCH/HOUR)
      1     285.45       8.10        6.175
      2     385.34      12.03        4.787

  COMPUTED CONFLUENCE ESTIMATES ARE AS FOLLOWS:
  PEAK FLOW RATE(CFS) =     385.34   Tc(MIN.) =   12.03
  TOTAL AREA(ACRES) =      159.9

****************************************************************************
  FLOW PROCESS FROM NODE   2102.00 TO NODE   2102.00 IS CODE =  12
----------------------------------------------------------------------------
  >>>>>CLEAR MEMORY BANK # 1 <<<<<
============================================================================

****************************************************************************
  FLOW PROCESS FROM NODE   2102.00 TO NODE   2104.00 IS CODE =  51
```

```
----------------------------------------------------------------------------
  >>>>>COMPUTE TRAPEZOIDAL CHANNEL FLOW<<<<<
  >>>>>TRAVELTIME THRU SUBAREA (EXISTING ELEMENT)<<<<<
============================================================================
  ELEVATION DATA: UPSTREAM(FEET) =    626.00  DOWNSTREAM(FEET) =    618.50
  CHANNEL LENGTH THRU SUBAREA(FEET) =   600.00   CHANNEL SLOPE =  0.0125
  CHANNEL BASE(FEET) =    3.00   "Z" FACTOR =   2.000
  MANNING'S FACTOR = 0.030   MAXIMUM DEPTH(FEET) =  10.00
   100 YEAR RAINFALL INTENSITY(INCH/HOUR) =  4.523
  *USER SPECIFIED(SUBAREA):
  USER-SPECIFIED RUNOFF COEFFICIENT = .7100
  S.C.S. CURVE NUMBER (AMC II) =   0
  TRAVEL TIME COMPUTED USING ESTIMATED FLOW(CFS) =     393.13
  TRAVEL TIME THRU SUBAREA BASED ON VELOCITY(FEET/SEC.) =   9.05
  AVERAGE FLOW DEPTH(FEET) =   3.97   TRAVEL TIME(MIN.) =   1.10
  Tc(MIN.) =   13.13
  SUBAREA AREA(ACRES) =     4.85       SUBAREA RUNOFF(CFS) =   15.58
  AREA-AVERAGE RUNOFF COEFFICIENT =  0.475
  TOTAL AREA(ACRES) =      164.8         PEAK FLOW RATE(CFS) =     385.34

  END OF SUBAREA CHANNEL FLOW HYDRAULICS:
  DEPTH(FEET) =  3.93   FLOW VELOCITY(FEET/SEC.) =   9.01
  LONGEST FLOWPATH FROM NODE   2001.00 TO NODE   2104.00 =    5230.00 FEET.

****************************************************************************
  FLOW PROCESS FROM NODE   2104.00 TO NODE   2104.00 IS CODE =   1
----------------------------------------------------------------------------
  >>>>>DESIGNATE INDEPENDENT STREAM FOR CONFLUENCE<<<<<
============================================================================
  TOTAL NUMBER OF STREAMS =  3
  CONFLUENCE VALUES USED FOR INDEPENDENT STREAM  1 ARE:
  TIME OF CONCENTRATION(MIN.) =   13.13
  RAINFALL INTENSITY(INCH/HR) =   4.52
  TOTAL STREAM AREA(ACRES) =   164.78
  PEAK FLOW RATE(CFS) AT CONFLUENCE =    385.34

****************************************************************************
  FLOW PROCESS FROM NODE   2103.50 TO NODE   2103.50 IS CODE =   7
----------------------------------------------------------------------------
  >>>>>USER SPECIFIED HYDROLOGY INFORMATION AT NODE<<<<<
============================================================================
  USER-SPECIFIED VALUES ARE AS FOLLOWS:
  TC(MIN) =  10.00   RAIN INTENSITY(INCH/HOUR) =  5.39
  TOTAL AREA(ACRES) =    26.68   TOTAL RUNOFF(CFS) =     24.90

****************************************************************************
  FLOW PROCESS FROM NODE   2103.50 TO NODE   2104.00 IS CODE =  31
----------------------------------------------------------------------------
  >>>>>COMPUTE PIPE-FLOW TRAVEL TIME THRU SUBAREA<<<<<
  >>>>>USING COMPUTER-ESTIMATED PIPESIZE (NON-PRESSURE FLOW)<<<<<
============================================================================
  ELEVATION DATA: UPSTREAM(FEET) =   628.81  DOWNSTREAM(FEET) =   618.50
  FLOW LENGTH(FEET) =   325.00   MANNING'S N =  0.013
  DEPTH OF FLOW IN  21.0 INCH PIPE IS  16.0 INCHES
  PIPE-FLOW VELOCITY(FEET/SEC.) =  12.64
  ESTIMATED PIPE DIAMETER(INCH) =  21.00    NUMBER OF PIPES =   1
  PIPE-FLOW(CFS) =      24.90
  PIPE TRAVEL TIME(MIN.) =   0.43    Tc(MIN.) =   10.43
  LONGEST FLOWPATH FROM NODE   2084.00 TO NODE   2104.00 =    1545.00 FEET.

****************************************************************************
  FLOW PROCESS FROM NODE   2104.00 TO NODE   2104.00 IS CODE =   1
----------------------------------------------------------------------------
```

```
  >>>>>DESIGNATE INDEPENDENT STREAM FOR CONFLUENCE<<<<<
==============================================================================
  TOTAL NUMBER OF STREAMS =  3
  CONFLUENCE VALUES USED FOR INDEPENDENT STREAM  2 ARE:
  TIME OF CONCENTRATION(MIN.) =   10.43
  RAINFALL INTENSITY(INCH/HR) =   5.25
  TOTAL STREAM AREA(ACRES) =    26.68
  PEAK FLOW RATE(CFS) AT CONFLUENCE =     24.90

******************************************************************************
  FLOW PROCESS FROM NODE   2103.10 TO NODE   2103.20 IS CODE =  21
------------------------------------------------------------------------------
  >>>>>RATIONAL METHOD INITIAL SUBAREA ANALYSIS<<<<<
==============================================================================
  *USER SPECIFIED(SUBAREA):
  USER-SPECIFIED RUNOFF COEFFICIENT = .7100
  S.C.S. CURVE NUMBER (AMC II) =   0
  INITIAL SUBAREA FLOW-LENGTH(FEET) =   100.00
  UPSTREAM ELEVATION(FEET) =    644.00
  DOWNSTREAM ELEVATION(FEET) =    642.00
  ELEVATION DIFFERENCE(FEET) =      2.00
  SUBAREA OVERLAND TIME OF FLOW(MIN.) =    4.984
  WARNING: INITIAL SUBAREA FLOW PATH LENGTH IS GREATER THAN
           THE MAXIMUM OVERLAND FLOW LENGTH =    80.00
           (Reference: Table 3-1B of Hydrology Manual)
           THE MAXIMUM OVERLAND FLOW LENGTH IS USED IN Tc CALCULATION!
   100 YEAR RAINFALL INTENSITY(INCH/HOUR) =  8.431
  NOTE: RAINFALL INTENSITY IS BASED ON Tc = 5-MINUTE.
  SUBAREA RUNOFF(CFS) =      1.14
  TOTAL AREA(ACRES) =      0.19   TOTAL RUNOFF(CFS) =      1.14

******************************************************************************
  FLOW PROCESS FROM NODE   2103.20 TO NODE   2103.30 IS CODE =  62
------------------------------------------------------------------------------
  >>>>>COMPUTE STREET FLOW TRAVEL TIME THRU SUBAREA<<<<<
  >>>>>(STREET TABLE SECTION #  1 USED)<<<<<
==============================================================================
  UPSTREAM ELEVATION(FEET) =  641.00  DOWNSTREAM ELEVATION(FEET) =  634.00
  STREET LENGTH(FEET) =   220.00   CURB HEIGHT(INCHES) =  4.0
  STREET HALFWIDTH(FEET) = 16.00

  DISTANCE FROM CROWN TO CROSSFALL GRADEBREAK(FEET) =   8.00
  INSIDE STREET CROSSFALL(DECIMAL) =  0.020
  OUTSIDE STREET CROSSFALL(DECIMAL)  =  0.020

  SPECIFIED NUMBER OF HALFSTREETS CARRYING RUNOFF =  2
  STREET PARKWAY CROSSFALL(DECIMAL)  =  0.020
  Manning's FRICTION FACTOR for Streetflow Section(curb-to-curb) =   0.0150
  Manning's FRICTION FACTOR for Back-of-Walk Flow Section =   0.0150

    **TRAVEL TIME COMPUTED USING ESTIMATED FLOW(CFS) =       5.49
    STREETFLOW MODEL RESULTS USING ESTIMATED FLOW:
    STREET FLOW DEPTH(FEET) =  0.20
    HALFSTREET FLOOD WIDTH(FEET) =    8.91
    AVERAGE FLOW VELOCITY(FEET/SEC.) =    3.46
    PRODUCT OF DEPTH&VELOCITY(FT*FT/SEC.) =    0.68
  STREET FLOW TRAVEL TIME(MIN.) =   1.06   Tc(MIN.) =    6.04
   100 YEAR RAINFALL INTENSITY(INCH/HOUR) =  7.460
  *USER SPECIFIED(SUBAREA):
  USER-SPECIFIED RUNOFF COEFFICIENT = .7100
  S.C.S. CURVE NUMBER (AMC II) =   0
  AREA-AVERAGE RUNOFF COEFFICIENT =  0.710
  SUBAREA AREA(ACRES) =    1.64      SUBAREA RUNOFF(CFS) =    8.69
```

```
  TOTAL AREA(ACRES) =        1.8        PEAK FLOW RATE(CFS) =       9.69

  END OF SUBAREA STREET FLOW HYDRAULICS:
  DEPTH(FEET) = 0.24   HALFSTREET FLOOD WIDTH(FEET) =  11.03
  FLOW VELOCITY(FEET/SEC.) =  3.98   DEPTH*VELOCITY(FT*FT/SEC.) =   0.95
  LONGEST FLOWPATH FROM NODE   2103.10 TO NODE   2103.30 =     320.00 FEET.

****************************************************************************
  FLOW PROCESS FROM NODE   2103.30 TO NODE   2135.00 IS CODE =  51
----------------------------------------------------------------------------
  >>>>>COMPUTE TRAPEZOIDAL CHANNEL FLOW<<<<<
  >>>>>TRAVELTIME THRU SUBAREA (EXISTING ELEMENT)<<<<<
============================================================================
  ELEVATION DATA: UPSTREAM(FEET) =    634.00  DOWNSTREAM(FEET) =    626.00
  CHANNEL LENGTH THRU SUBAREA(FEET) =   680.00   CHANNEL SLOPE =  0.0118
  CHANNEL BASE(FEET) =    3.00   "Z" FACTOR =   2.000
  MANNING'S FACTOR = 0.030   MAXIMUM DEPTH(FEET) =  10.00
   100 YEAR RAINFALL INTENSITY(INCH/HOUR) =  5.755
  *USER SPECIFIED(SUBAREA):
  USER-SPECIFIED RUNOFF COEFFICIENT = .7100
  S.C.S. CURVE NUMBER (AMC II) =   0
  TRAVEL TIME COMPUTED USING ESTIMATED FLOW(CFS) =      15.31
  TRAVEL TIME THRU SUBAREA BASED ON VELOCITY(FEET/SEC.) =   3.79
  AVERAGE FLOW DEPTH(FEET) =   0.86   TRAVEL TIME(MIN.) =   2.99
  Tc(MIN.) =    9.04
  SUBAREA AREA(ACRES) =     2.73       SUBAREA RUNOFF(CFS) =   11.16
  AREA-AVERAGE RUNOFF COEFFICIENT =  0.710
  TOTAL AREA(ACRES) =        4.6         PEAK FLOW RATE(CFS) =      18.63

  END OF SUBAREA CHANNEL FLOW HYDRAULICS:
  DEPTH(FEET) =  0.95   FLOW VELOCITY(FEET/SEC.) =   4.00
  LONGEST FLOWPATH FROM NODE   2103.10 TO NODE   2135.00 =    1000.00 FEET.

****************************************************************************
  FLOW PROCESS FROM NODE   2135.00 TO NODE   2104.00 IS CODE =  31
----------------------------------------------------------------------------
  >>>>>COMPUTE PIPE-FLOW TRAVEL TIME THRU SUBAREA<<<<<
  >>>>>USING COMPUTER-ESTIMATED PIPESIZE (NON-PRESSURE FLOW)<<<<<
============================================================================
  ELEVATION DATA: UPSTREAM(FEET) =   618.30  DOWNSTREAM(FEET) =   617.00
  FLOW LENGTH(FEET) =   165.00   MANNING'S N =  0.013
  DEPTH OF FLOW IN  24.0 INCH PIPE IS  19.2 INCHES
  PIPE-FLOW VELOCITY(FEET/SEC.) =   6.91
  ESTIMATED PIPE DIAMETER(INCH) =  24.00    NUMBER OF PIPES =   1
  PIPE-FLOW(CFS) =      18.63
  PIPE TRAVEL TIME(MIN.) =   0.40    Tc(MIN.) =    9.44
  LONGEST FLOWPATH FROM NODE   2103.10 TO NODE   2104.00 =    1165.00 FEET.

****************************************************************************
  FLOW PROCESS FROM NODE   2104.00 TO NODE   2104.00 IS CODE =   1
----------------------------------------------------------------------------
  >>>>>DESIGNATE INDEPENDENT STREAM FOR CONFLUENCE<<<<<
  >>>>>AND COMPUTE VARIOUS CONFLUENCED STREAM VALUES<<<<<
============================================================================
  TOTAL NUMBER OF STREAMS =  3
  CONFLUENCE VALUES USED FOR INDEPENDENT STREAM  3 ARE:
  TIME OF CONCENTRATION(MIN.) =    9.44
  RAINFALL INTENSITY(INCH/HR) =   5.60
  TOTAL STREAM AREA(ACRES) =     4.56
  PEAK FLOW RATE(CFS) AT CONFLUENCE =     18.63

  ** CONFLUENCE DATA **
  STREAM     RUNOFF       Tc      INTENSITY      AREA
```

```
  NUMBER      (CFS)     (MIN.)   (INCH/HOUR)    (ACRE)
      1      385.34    13.13        4.523        164.78
      2       24.90    10.43        5.248         26.68
      3       18.63     9.44        5.598          4.56

  RAINFALL INTENSITY AND TIME OF CONCENTRATION RATIO
  CONFLUENCE FORMULA USED FOR  3 STREAMS.

  ** PEAK FLOW RATE TABLE **
  STREAM     RUNOFF      Tc      INTENSITY
  NUMBER      (CFS)    (MIN.)   (INCH/HOUR)
      1      318.07     9.44       5.598
      2      348.42    10.43       5.248
      3      421.86    13.13       4.523

  COMPUTED CONFLUENCE ESTIMATES ARE AS FOLLOWS:
  PEAK FLOW RATE(CFS) =     421.86   Tc(MIN.) =   13.13
  TOTAL AREA(ACRES) =      196.0
  LONGEST FLOWPATH FROM NODE   2001.00 TO NODE   2104.00 =    5230.00 FEET.

****************************************************************************
  FLOW PROCESS FROM NODE   2104.00 TO NODE   2131.00 IS CODE =  52
----------------------------------------------------------------------------
  >>>>>COMPUTE NATURAL VALLEY CHANNEL FLOW<<<<<
  >>>>>TRAVELTIME THRU SUBAREA<<<<<
============================================================================
  ELEVATION DATA: UPSTREAM(FEET) =    618.50  DOWNSTREAM(FEET) =    612.00
  CHANNEL LENGTH THRU SUBAREA(FEET) =   210.00   CHANNEL SLOPE =  0.0310
  CHANNEL FLOW THRU SUBAREA(CFS) =     421.86
  FLOW VELOCITY(FEET/SEC) =  13.05 (PER LACFCD/RCFC&WCD HYDROLOGY MANUAL)
  TRAVEL TIME(MIN.) =   0.27   Tc(MIN.) =   13.40
  LONGEST FLOWPATH FROM NODE   2001.00 TO NODE   2131.00 =    5440.00 FEET.

****************************************************************************
  FLOW PROCESS FROM NODE   2131.00 TO NODE   2131.00 IS CODE =  10
----------------------------------------------------------------------------
  >>>>>MAIN-STREAM MEMORY COPIED ONTO MEMORY BANK # 1 <<<<<
============================================================================

****************************************************************************
  FLOW PROCESS FROM NODE   2108.00 TO NODE   2109.00 IS CODE =  21
----------------------------------------------------------------------------
  >>>>>RATIONAL METHOD INITIAL SUBAREA ANALYSIS<<<<<
============================================================================
  *USER SPECIFIED(SUBAREA):
  USER-SPECIFIED RUNOFF COEFFICIENT = .7100
  S.C.S. CURVE NUMBER (AMC II) =   0
  INITIAL SUBAREA FLOW-LENGTH(FEET) =   100.00
  UPSTREAM ELEVATION(FEET) =    698.40
  DOWNSTREAM ELEVATION(FEET) =    696.40
  ELEVATION DIFFERENCE(FEET) =      2.00
  SUBAREA OVERLAND TIME OF FLOW(MIN.) =    4.984
  WARNING: INITIAL SUBAREA FLOW PATH LENGTH IS GREATER THAN
           THE MAXIMUM OVERLAND FLOW LENGTH =    80.00
           (Reference: Table 3-1B of Hydrology Manual)
           THE MAXIMUM OVERLAND FLOW LENGTH IS USED IN Tc CALCULATION!
   100 YEAR RAINFALL INTENSITY(INCH/HOUR) =  8.431
  NOTE: RAINFALL INTENSITY IS BASED ON Tc = 5-MINUTE.
  SUBAREA RUNOFF(CFS) =      0.96
  TOTAL AREA(ACRES) =      0.16   TOTAL RUNOFF(CFS) =      0.96

****************************************************************************
  FLOW PROCESS FROM NODE   2109.00 TO NODE   2110.00 IS CODE =  62
```

```
----------------------------------------------------------------------------
  >>>>>COMPUTE STREET FLOW TRAVEL TIME THRU SUBAREA<<<<<
  >>>>>(STREET TABLE SECTION #  1 USED)<<<<<
============================================================================
  UPSTREAM ELEVATION(FEET) =  695.00  DOWNSTREAM ELEVATION(FEET) =  667.00
  STREET LENGTH(FEET) =   390.00   CURB HEIGHT(INCHES) =  4.0
  STREET HALFWIDTH(FEET) = 16.00

  DISTANCE FROM CROWN TO CROSSFALL GRADEBREAK(FEET) =   8.00
  INSIDE STREET CROSSFALL(DECIMAL) =  0.020
  OUTSIDE STREET CROSSFALL(DECIMAL)  =  0.020

  SPECIFIED NUMBER OF HALFSTREETS CARRYING RUNOFF =  1
  STREET PARKWAY CROSSFALL(DECIMAL)  =  0.020
  Manning's FRICTION FACTOR for Streetflow Section(curb-to-curb) =   0.0150
  Manning's FRICTION FACTOR for Back-of-Walk Flow Section =   0.0150

    **TRAVEL TIME COMPUTED USING ESTIMATED FLOW(CFS) =       2.34
    STREETFLOW MODEL RESULTS USING ESTIMATED FLOW:
    STREET FLOW DEPTH(FEET) =  0.16
    HALFSTREET FLOOD WIDTH(FEET) =    7.17
    AVERAGE FLOW VELOCITY(FEET/SEC.) =    4.54
    PRODUCT OF DEPTH&VELOCITY(FT*FT/SEC.) =    0.73
  STREET FLOW TRAVEL TIME(MIN.) =   1.43   Tc(MIN.) =    6.42
   100 YEAR RAINFALL INTENSITY(INCH/HOUR) =  7.178
  *USER SPECIFIED(SUBAREA):
  USER-SPECIFIED RUNOFF COEFFICIENT = .7100
  S.C.S. CURVE NUMBER (AMC II) =   0
  AREA-AVERAGE RUNOFF COEFFICIENT =  0.710
  SUBAREA AREA(ACRES) =    0.54      SUBAREA RUNOFF(CFS) =    2.75
  TOTAL AREA(ACRES) =        0.7        PEAK FLOW RATE(CFS) =       3.57

  END OF SUBAREA STREET FLOW HYDRAULICS:
  DEPTH(FEET) = 0.19   HALFSTREET FLOOD WIDTH(FEET) =   8.41
  FLOW VELOCITY(FEET/SEC.) =  5.04   DEPTH*VELOCITY(FT*FT/SEC.) =   0.94
  LONGEST FLOWPATH FROM NODE   2108.00 TO NODE   2110.00 =     490.00 FEET.

****************************************************************************
  FLOW PROCESS FROM NODE   2110.00 TO NODE   2110.00 IS CODE =   1
----------------------------------------------------------------------------
  >>>>>DESIGNATE INDEPENDENT STREAM FOR CONFLUENCE<<<<<
============================================================================
  TOTAL NUMBER OF STREAMS =  2
  CONFLUENCE VALUES USED FOR INDEPENDENT STREAM  1 ARE:
  TIME OF CONCENTRATION(MIN.) =    6.42
  RAINFALL INTENSITY(INCH/HR) =   7.18
  TOTAL STREAM AREA(ACRES) =     0.70
  PEAK FLOW RATE(CFS) AT CONFLUENCE =      3.57

****************************************************************************
  FLOW PROCESS FROM NODE   2105.00 TO NODE   2106.00 IS CODE =  21
----------------------------------------------------------------------------
  >>>>>RATIONAL METHOD INITIAL SUBAREA ANALYSIS<<<<<
============================================================================
  *USER SPECIFIED(SUBAREA):
  USER-SPECIFIED RUNOFF COEFFICIENT = .7100
  S.C.S. CURVE NUMBER (AMC II) =   0
  INITIAL SUBAREA FLOW-LENGTH(FEET) =   125.00
  UPSTREAM ELEVATION(FEET) =    695.00
  DOWNSTREAM ELEVATION(FEET) =    689.00
  ELEVATION DIFFERENCE(FEET) =      6.00
  SUBAREA OVERLAND TIME OF FLOW(MIN.) =    4.151
  WARNING: INITIAL SUBAREA FLOW PATH LENGTH IS GREATER THAN
```

```
          THE MAXIMUM OVERLAND FLOW LENGTH =    99.50
          (Reference: Table 3-1B of Hydrology Manual)
          THE MAXIMUM OVERLAND FLOW LENGTH IS USED IN Tc CALCULATION!
   100 YEAR RAINFALL INTENSITY(INCH/HOUR) =  8.431
  NOTE: RAINFALL INTENSITY IS BASED ON Tc = 5-MINUTE.
  SUBAREA RUNOFF(CFS) =      0.48
  TOTAL AREA(ACRES) =      0.08   TOTAL RUNOFF(CFS) =      0.48

****************************************************************************
  FLOW PROCESS FROM NODE   2106.00 TO NODE   2107.00 IS CODE =  62
----------------------------------------------------------------------------
  >>>>>COMPUTE STREET FLOW TRAVEL TIME THRU SUBAREA<<<<<
  >>>>>(STREET TABLE SECTION #  1 USED)<<<<<
============================================================================
  UPSTREAM ELEVATION(FEET) =  689.00  DOWNSTREAM ELEVATION(FEET) =  667.00
  STREET LENGTH(FEET) =   260.00   CURB HEIGHT(INCHES) =  4.0
  STREET HALFWIDTH(FEET) = 16.00

  DISTANCE FROM CROWN TO CROSSFALL GRADEBREAK(FEET) =   8.00
  INSIDE STREET CROSSFALL(DECIMAL) =  0.020
  OUTSIDE STREET CROSSFALL(DECIMAL)  =  0.020

  SPECIFIED NUMBER OF HALFSTREETS CARRYING RUNOFF =  1
  STREET PARKWAY CROSSFALL(DECIMAL)  =  0.020
  Manning's FRICTION FACTOR for Streetflow Section(curb-to-curb) =   0.0150
  Manning's FRICTION FACTOR for Back-of-Walk Flow Section =   0.0150

    **TRAVEL TIME COMPUTED USING ESTIMATED FLOW(CFS) =       0.97
    STREETFLOW MODEL RESULTS USING ESTIMATED FLOW:
    STREET FLOW DEPTH(FEET) =  0.12
    HALFSTREET FLOOD WIDTH(FEET) =    5.01
    AVERAGE FLOW VELOCITY(FEET/SEC.) =    3.85
    PRODUCT OF DEPTH&VELOCITY(FT*FT/SEC.) =    0.46
  STREET FLOW TRAVEL TIME(MIN.) =   1.12   Tc(MIN.) =    5.28
   100 YEAR RAINFALL INTENSITY(INCH/HOUR) =  8.144
  *USER SPECIFIED(SUBAREA):
  USER-SPECIFIED RUNOFF COEFFICIENT = .7100
  S.C.S. CURVE NUMBER (AMC II) =   0
  AREA-AVERAGE RUNOFF COEFFICIENT =  0.710
  SUBAREA AREA(ACRES) =    0.17      SUBAREA RUNOFF(CFS) =    0.98
  TOTAL AREA(ACRES) =        0.2        PEAK FLOW RATE(CFS) =       1.45

  END OF SUBAREA STREET FLOW HYDRAULICS:
  DEPTH(FEET) = 0.13   HALFSTREET FLOOD WIDTH(FEET) =   5.81
  FLOW VELOCITY(FEET/SEC.) =  4.27   DEPTH*VELOCITY(FT*FT/SEC.) =   0.57
  LONGEST FLOWPATH FROM NODE   2105.00 TO NODE   2107.00 =     385.00 FEET.

****************************************************************************
  FLOW PROCESS FROM NODE   2107.00 TO NODE   2110.00 IS CODE =  31
----------------------------------------------------------------------------
  >>>>>COMPUTE PIPE-FLOW TRAVEL TIME THRU SUBAREA<<<<<
  >>>>>USING COMPUTER-ESTIMATED PIPESIZE (NON-PRESSURE FLOW)<<<<<
============================================================================
  ELEVATION DATA: UPSTREAM(FEET) =   661.00  DOWNSTREAM(FEET) =   660.70
  FLOW LENGTH(FEET) =    30.00   MANNING'S N =  0.013
  ESTIMATED PIPE DIAMETER(INCH) INCREASED TO 12.000
  DEPTH OF FLOW IN  12.0 INCH PIPE IS   5.5 INCHES
  PIPE-FLOW VELOCITY(FEET/SEC.) =   4.13
  ESTIMATED PIPE DIAMETER(INCH) =  12.00    NUMBER OF PIPES =   1
  PIPE-FLOW(CFS) =       1.45
  PIPE TRAVEL TIME(MIN.) =   0.12    Tc(MIN.) =    5.40
  LONGEST FLOWPATH FROM NODE   2105.00 TO NODE   2110.00 =     415.00 FEET.
```

```
****************************************************************************
  FLOW PROCESS FROM NODE   2110.00 TO NODE   2110.00 IS CODE =   1
----------------------------------------------------------------------------
  >>>>>DESIGNATE INDEPENDENT STREAM FOR CONFLUENCE<<<<<
  >>>>>AND COMPUTE VARIOUS CONFLUENCED STREAM VALUES<<<<<
============================================================================
  TOTAL NUMBER OF STREAMS =  2
  CONFLUENCE VALUES USED FOR INDEPENDENT STREAM  2 ARE:
  TIME OF CONCENTRATION(MIN.) =    5.40
  RAINFALL INTENSITY(INCH/HR) =   8.03
  TOTAL STREAM AREA(ACRES) =     0.25
  PEAK FLOW RATE(CFS) AT CONFLUENCE =      1.45

  ** CONFLUENCE DATA **
  STREAM     RUNOFF       Tc      INTENSITY      AREA
  NUMBER      (CFS)     (MIN.)   (INCH/HOUR)    (ACRE)
      1        3.57     6.42        7.178          0.70
      2        1.45     5.40        8.026          0.25

  RAINFALL INTENSITY AND TIME OF CONCENTRATION RATIO
  CONFLUENCE FORMULA USED FOR  2 STREAMS.

  ** PEAK FLOW RATE TABLE **
  STREAM     RUNOFF      Tc      INTENSITY
  NUMBER      (CFS)    (MIN.)   (INCH/HOUR)
      1        4.45     5.40       8.026
      2        4.86     6.42       7.178

  COMPUTED CONFLUENCE ESTIMATES ARE AS FOLLOWS:
  PEAK FLOW RATE(CFS) =       4.86   Tc(MIN.) =    6.42
  TOTAL AREA(ACRES) =        1.0
  LONGEST FLOWPATH FROM NODE   2108.00 TO NODE   2110.00 =     490.00 FEET.

****************************************************************************
  FLOW PROCESS FROM NODE   2110.00 TO NODE   2116.00 IS CODE =  31
----------------------------------------------------------------------------
  >>>>>COMPUTE PIPE-FLOW TRAVEL TIME THRU SUBAREA<<<<<
  >>>>>USING COMPUTER-ESTIMATED PIPESIZE (NON-PRESSURE FLOW)<<<<<
============================================================================
  ELEVATION DATA: UPSTREAM(FEET) =   660.70  DOWNSTREAM(FEET) =   622.50
  FLOW LENGTH(FEET) =   600.00   MANNING'S N =  0.013
  DEPTH OF FLOW IN  12.0 INCH PIPE IS   6.5 INCHES
  PIPE-FLOW VELOCITY(FEET/SEC.) =  11.21
  ESTIMATED PIPE DIAMETER(INCH) =  12.00    NUMBER OF PIPES =   1
  PIPE-FLOW(CFS) =       4.86
  PIPE TRAVEL TIME(MIN.) =   0.89    Tc(MIN.) =    7.31
  LONGEST FLOWPATH FROM NODE   2108.00 TO NODE   2116.00 =    1090.00 FEET.

****************************************************************************
  FLOW PROCESS FROM NODE   2116.00 TO NODE   2116.00 IS CODE =   1
----------------------------------------------------------------------------
  >>>>>DESIGNATE INDEPENDENT STREAM FOR CONFLUENCE<<<<<
============================================================================
  TOTAL NUMBER OF STREAMS =  3
  CONFLUENCE VALUES USED FOR INDEPENDENT STREAM  1 ARE:
  TIME OF CONCENTRATION(MIN.) =    7.31
  RAINFALL INTENSITY(INCH/HR) =   6.60
  TOTAL STREAM AREA(ACRES) =     0.95
  PEAK FLOW RATE(CFS) AT CONFLUENCE =      4.86

****************************************************************************
  FLOW PROCESS FROM NODE   2111.00 TO NODE   2112.00 IS CODE =  21
----------------------------------------------------------------------------
```

```
  >>>>>RATIONAL METHOD INITIAL SUBAREA ANALYSIS<<<<<
==============================================================================
  *USER SPECIFIED(SUBAREA):
  USER-SPECIFIED RUNOFF COEFFICIENT = .7100
  S.C.S. CURVE NUMBER (AMC II) =   0
  INITIAL SUBAREA FLOW-LENGTH(FEET) =   100.00
  UPSTREAM ELEVATION(FEET) =    665.00
  DOWNSTREAM ELEVATION(FEET) =    663.00
  ELEVATION DIFFERENCE(FEET) =      2.00
  SUBAREA OVERLAND TIME OF FLOW(MIN.) =    4.984
  WARNING: INITIAL SUBAREA FLOW PATH LENGTH IS GREATER THAN
           THE MAXIMUM OVERLAND FLOW LENGTH =    80.00
           (Reference: Table 3-1B of Hydrology Manual)
           THE MAXIMUM OVERLAND FLOW LENGTH IS USED IN Tc CALCULATION!
   100 YEAR RAINFALL INTENSITY(INCH/HOUR) =  8.431
  NOTE: RAINFALL INTENSITY IS BASED ON Tc = 5-MINUTE.
  SUBAREA RUNOFF(CFS) =      0.42
  TOTAL AREA(ACRES) =      0.07   TOTAL RUNOFF(CFS) =      0.42

******************************************************************************
  FLOW PROCESS FROM NODE   2112.00 TO NODE   2113.00 IS CODE =  62
------------------------------------------------------------------------------
  >>>>>COMPUTE STREET FLOW TRAVEL TIME THRU SUBAREA<<<<<
  >>>>>(STREET TABLE SECTION #  1 USED)<<<<<
==============================================================================
  UPSTREAM ELEVATION(FEET) =  663.00  DOWNSTREAM ELEVATION(FEET) =  625.50
  STREET LENGTH(FEET) =   700.00   CURB HEIGHT(INCHES) =  4.0
  STREET HALFWIDTH(FEET) = 16.00

  DISTANCE FROM CROWN TO CROSSFALL GRADEBREAK(FEET) =   8.00
  INSIDE STREET CROSSFALL(DECIMAL) =  0.020
  OUTSIDE STREET CROSSFALL(DECIMAL)  =  0.020

  SPECIFIED NUMBER OF HALFSTREETS CARRYING RUNOFF =  1
  STREET PARKWAY CROSSFALL(DECIMAL)  =  0.020
  Manning's FRICTION FACTOR for Streetflow Section(curb-to-curb) =   0.0150
  Manning's FRICTION FACTOR for Back-of-Walk Flow Section =   0.0150

    **TRAVEL TIME COMPUTED USING ESTIMATED FLOW(CFS) =       5.59
    STREETFLOW MODEL RESULTS USING ESTIMATED FLOW:
    STREET FLOW DEPTH(FEET) =  0.23
    HALFSTREET FLOOD WIDTH(FEET) =   10.53
    AVERAGE FLOW VELOCITY(FEET/SEC.) =    5.03
    PRODUCT OF DEPTH&VELOCITY(FT*FT/SEC.) =    1.15
  STREET FLOW TRAVEL TIME(MIN.) =   2.32   Tc(MIN.) =    7.30
   100 YEAR RAINFALL INTENSITY(INCH/HOUR) =  6.604
  *USER SPECIFIED(SUBAREA):
  USER-SPECIFIED RUNOFF COEFFICIENT = .7100
  S.C.S. CURVE NUMBER (AMC II) =   0
  AREA-AVERAGE RUNOFF COEFFICIENT =  0.710
  SUBAREA AREA(ACRES) =    2.18      SUBAREA RUNOFF(CFS) =   10.22
  TOTAL AREA(ACRES) =        2.2        PEAK FLOW RATE(CFS) =      10.55

  END OF SUBAREA STREET FLOW HYDRAULICS:
  DEPTH(FEET) = 0.28   HALFSTREET FLOOD WIDTH(FEET) =  13.34
  FLOW VELOCITY(FEET/SEC.) =  5.92   DEPTH*VELOCITY(FT*FT/SEC.) =   1.69
  LONGEST FLOWPATH FROM NODE   2111.00 TO NODE   2113.00 =     800.00 FEET.

******************************************************************************
  FLOW PROCESS FROM NODE   2113.00 TO NODE   2116.00 IS CODE =  31
------------------------------------------------------------------------------
  >>>>>COMPUTE PIPE-FLOW TRAVEL TIME THRU SUBAREA<<<<<
  >>>>>USING COMPUTER-ESTIMATED PIPESIZE (NON-PRESSURE FLOW)<<<<<
```

```
============================================================================
  ELEVATION DATA: UPSTREAM(FEET) =   622.80  DOWNSTREAM(FEET) =   622.50
  FLOW LENGTH(FEET) =    30.00   MANNING'S N =  0.013
  DEPTH OF FLOW IN  21.0 INCH PIPE IS  13.0 INCHES
  PIPE-FLOW VELOCITY(FEET/SEC.) =   6.76
  ESTIMATED PIPE DIAMETER(INCH) =  21.00    NUMBER OF PIPES =   1
  PIPE-FLOW(CFS) =      10.55
  PIPE TRAVEL TIME(MIN.) =   0.07    Tc(MIN.) =    7.38
  LONGEST FLOWPATH FROM NODE   2111.00 TO NODE   2116.00 =     830.00 FEET.

****************************************************************************
  FLOW PROCESS FROM NODE   2116.00 TO NODE   2116.00 IS CODE =   1
----------------------------------------------------------------------------
  >>>>>DESIGNATE INDEPENDENT STREAM FOR CONFLUENCE<<<<<
============================================================================
  TOTAL NUMBER OF STREAMS =  3
  CONFLUENCE VALUES USED FOR INDEPENDENT STREAM  2 ARE:
  TIME OF CONCENTRATION(MIN.) =    7.38
  RAINFALL INTENSITY(INCH/HR) =   6.56
  TOTAL STREAM AREA(ACRES) =     2.25
  PEAK FLOW RATE(CFS) AT CONFLUENCE =     10.55

****************************************************************************
  FLOW PROCESS FROM NODE   2114.00 TO NODE   2115.00 IS CODE =  21
----------------------------------------------------------------------------
  >>>>>RATIONAL METHOD INITIAL SUBAREA ANALYSIS<<<<<
============================================================================
  *USER SPECIFIED(SUBAREA):
  USER-SPECIFIED RUNOFF COEFFICIENT = .7100
  S.C.S. CURVE NUMBER (AMC II) =   0
  INITIAL SUBAREA FLOW-LENGTH(FEET) =    85.00
  UPSTREAM ELEVATION(FEET) =    662.00
  DOWNSTREAM ELEVATION(FEET) =    654.00
  ELEVATION DIFFERENCE(FEET) =      8.00
  SUBAREA OVERLAND TIME OF FLOW(MIN.) =    3.066
   100 YEAR RAINFALL INTENSITY(INCH/HOUR) =  8.431
  NOTE: RAINFALL INTENSITY IS BASED ON Tc = 5-MINUTE.
  SUBAREA RUNOFF(CFS) =      0.30
  TOTAL AREA(ACRES) =      0.05   TOTAL RUNOFF(CFS) =      0.30

****************************************************************************
  FLOW PROCESS FROM NODE   2115.00 TO NODE   2116.00 IS CODE =  62
----------------------------------------------------------------------------
  >>>>>COMPUTE STREET FLOW TRAVEL TIME THRU SUBAREA<<<<<
  >>>>>(STREET TABLE SECTION #  1 USED)<<<<<
============================================================================
  UPSTREAM ELEVATION(FEET) =  654.00  DOWNSTREAM ELEVATION(FEET) =  625.50
  STREET LENGTH(FEET) =   485.00   CURB HEIGHT(INCHES) =  4.0
  STREET HALFWIDTH(FEET) = 16.00

  DISTANCE FROM CROWN TO CROSSFALL GRADEBREAK(FEET) =   8.00
  INSIDE STREET CROSSFALL(DECIMAL) =  0.020
  OUTSIDE STREET CROSSFALL(DECIMAL)  =  0.020

  SPECIFIED NUMBER OF HALFSTREETS CARRYING RUNOFF =  1
  STREET PARKWAY CROSSFALL(DECIMAL)  =  0.020
  Manning's FRICTION FACTOR for Streetflow Section(curb-to-curb) =   0.0150
  Manning's FRICTION FACTOR for Back-of-Walk Flow Section =   0.0150

    **TRAVEL TIME COMPUTED USING ESTIMATED FLOW(CFS) =       5.81
    STREETFLOW MODEL RESULTS USING ESTIMATED FLOW:
    STREET FLOW DEPTH(FEET) =  0.23
    HALFSTREET FLOOD WIDTH(FEET) =   10.47
```

```
    AVERAGE FLOW VELOCITY(FEET/SEC.) =    5.29
    PRODUCT OF DEPTH&VELOCITY(FT*FT/SEC.) =    1.20
  STREET FLOW TRAVEL TIME(MIN.) =   1.53   Tc(MIN.) =    4.59
   100 YEAR RAINFALL INTENSITY(INCH/HOUR) =  8.431
  NOTE: RAINFALL INTENSITY IS BASED ON Tc = 5-MINUTE.
  *USER SPECIFIED(SUBAREA):
  USER-SPECIFIED RUNOFF COEFFICIENT = .7100
  S.C.S. CURVE NUMBER (AMC II) =   0
  AREA-AVERAGE RUNOFF COEFFICIENT =  0.710
  SUBAREA AREA(ACRES) =    1.84      SUBAREA RUNOFF(CFS) =   11.01
  TOTAL AREA(ACRES) =        1.9        PEAK FLOW RATE(CFS) =      11.31

  END OF SUBAREA STREET FLOW HYDRAULICS:
  DEPTH(FEET) = 0.29   HALFSTREET FLOOD WIDTH(FEET) =  13.47
  FLOW VELOCITY(FEET/SEC.) =  6.23   DEPTH*VELOCITY(FT*FT/SEC.) =   1.79
  LONGEST FLOWPATH FROM NODE   2114.00 TO NODE   2116.00 =     570.00 FEET.

****************************************************************************
  FLOW PROCESS FROM NODE   2116.00 TO NODE   2116.00 IS CODE =   1
----------------------------------------------------------------------------
  >>>>>DESIGNATE INDEPENDENT STREAM FOR CONFLUENCE<<<<<
  >>>>>AND COMPUTE VARIOUS CONFLUENCED STREAM VALUES<<<<<
============================================================================
  TOTAL NUMBER OF STREAMS =  3
  CONFLUENCE VALUES USED FOR INDEPENDENT STREAM  3 ARE:
  TIME OF CONCENTRATION(MIN.) =    4.59
  RAINFALL INTENSITY(INCH/HR) =   8.43
  TOTAL STREAM AREA(ACRES) =     1.89
  PEAK FLOW RATE(CFS) AT CONFLUENCE =     11.31

  ** CONFLUENCE DATA **
  STREAM     RUNOFF       Tc      INTENSITY      AREA
  NUMBER      (CFS)     (MIN.)   (INCH/HOUR)    (ACRE)
      1        4.86     7.31        6.600          0.95
      2       10.55     7.38        6.561          2.25
      3       11.31     4.59        8.431          1.89

  RAINFALL INTENSITY AND TIME OF CONCENTRATION RATIO
  CONFLUENCE FORMULA USED FOR  3 STREAMS.

  ** PEAK FLOW RATE TABLE **
  STREAM     RUNOFF      Tc      INTENSITY
  NUMBER      (CFS)    (MIN.)   (INCH/HOUR)
      1       21.69     4.59       8.431
      2       24.17     7.31       6.600
      3       24.19     7.38       6.561

  COMPUTED CONFLUENCE ESTIMATES ARE AS FOLLOWS:
  PEAK FLOW RATE(CFS) =      24.19   Tc(MIN.) =    7.38
  TOTAL AREA(ACRES) =        5.1
  LONGEST FLOWPATH FROM NODE   2108.00 TO NODE   2116.00 =    1090.00 FEET.

****************************************************************************
  FLOW PROCESS FROM NODE   2116.00 TO NODE   2117.00 IS CODE =  31
----------------------------------------------------------------------------
  >>>>>COMPUTE PIPE-FLOW TRAVEL TIME THRU SUBAREA<<<<<
  >>>>>USING COMPUTER-ESTIMATED PIPESIZE (NON-PRESSURE FLOW)<<<<<
============================================================================
  ELEVATION DATA: UPSTREAM(FEET) =   622.50  DOWNSTREAM(FEET) =   621.00
  FLOW LENGTH(FEET) =    40.00   MANNING'S N =  0.013
  DEPTH OF FLOW IN  21.0 INCH PIPE IS  14.6 INCHES
  PIPE-FLOW VELOCITY(FEET/SEC.) =  13.53
  ESTIMATED PIPE DIAMETER(INCH) =  21.00    NUMBER OF PIPES =   1
```

```
  PIPE-FLOW(CFS) =      24.19
  PIPE TRAVEL TIME(MIN.) =   0.05    Tc(MIN.) =    7.42
  LONGEST FLOWPATH FROM NODE   2108.00 TO NODE   2117.00 =    1130.00 FEET.

****************************************************************************
  FLOW PROCESS FROM NODE   2117.00 TO NODE   2117.00 IS CODE =   1
----------------------------------------------------------------------------
  >>>>>DESIGNATE INDEPENDENT STREAM FOR CONFLUENCE<<<<<
============================================================================
  TOTAL NUMBER OF STREAMS =  2
  CONFLUENCE VALUES USED FOR INDEPENDENT STREAM  1 ARE:
  TIME OF CONCENTRATION(MIN.) =    7.42
  RAINFALL INTENSITY(INCH/HR) =   6.53
  TOTAL STREAM AREA(ACRES) =     5.09
  PEAK FLOW RATE(CFS) AT CONFLUENCE =     24.19

****************************************************************************
  FLOW PROCESS FROM NODE   2117.10 TO NODE   2117.00 IS CODE =  21
----------------------------------------------------------------------------
  >>>>>RATIONAL METHOD INITIAL SUBAREA ANALYSIS<<<<<
============================================================================
  *USER SPECIFIED(SUBAREA):
  USER-SPECIFIED RUNOFF COEFFICIENT = .3500
  S.C.S. CURVE NUMBER (AMC II) =   0
  INITIAL SUBAREA FLOW-LENGTH(FEET) =   100.00
  UPSTREAM ELEVATION(FEET) =    622.00
  DOWNSTREAM ELEVATION(FEET) =    621.00
  ELEVATION DIFFERENCE(FEET) =      1.00
  SUBAREA OVERLAND TIME OF FLOW(MIN.) =   10.884
  WARNING: INITIAL SUBAREA FLOW PATH LENGTH IS GREATER THAN
           THE MAXIMUM OVERLAND FLOW LENGTH =    65.00
           (Reference: Table 3-1B of Hydrology Manual)
           THE MAXIMUM OVERLAND FLOW LENGTH IS USED IN Tc CALCULATION!
   100 YEAR RAINFALL INTENSITY(INCH/HOUR) =  5.105
  SUBAREA RUNOFF(CFS) =      0.45
  TOTAL AREA(ACRES) =      0.25   TOTAL RUNOFF(CFS) =      0.45

****************************************************************************
  FLOW PROCESS FROM NODE   2117.00 TO NODE   2117.00 IS CODE =   1
----------------------------------------------------------------------------
  >>>>>DESIGNATE INDEPENDENT STREAM FOR CONFLUENCE<<<<<
  >>>>>AND COMPUTE VARIOUS CONFLUENCED STREAM VALUES<<<<<
============================================================================
  TOTAL NUMBER OF STREAMS =  2
  CONFLUENCE VALUES USED FOR INDEPENDENT STREAM  2 ARE:
  TIME OF CONCENTRATION(MIN.) =   10.88
  RAINFALL INTENSITY(INCH/HR) =   5.10
  TOTAL STREAM AREA(ACRES) =     0.25
  PEAK FLOW RATE(CFS) AT CONFLUENCE =      0.45

  ** CONFLUENCE DATA **
  STREAM     RUNOFF       Tc      INTENSITY      AREA
  NUMBER      (CFS)     (MIN.)   (INCH/HOUR)    (ACRE)
      1       24.19     7.42        6.533         5.09
      2        0.45    10.88        5.105         0.25

  RAINFALL INTENSITY AND TIME OF CONCENTRATION RATIO
  CONFLUENCE FORMULA USED FOR  2 STREAMS.

  ** PEAK FLOW RATE TABLE **
  STREAM     RUNOFF      Tc      INTENSITY
  NUMBER      (CFS)    (MIN.)   (INCH/HOUR)
      1       24.49     7.42       6.533
```

```
     2       19.35    10.88       5.105

  COMPUTED CONFLUENCE ESTIMATES ARE AS FOLLOWS:
  PEAK FLOW RATE(CFS) =      24.49   Tc(MIN.) =    7.42
  TOTAL AREA(ACRES) =        5.3
  LONGEST FLOWPATH FROM NODE   2108.00 TO NODE   2117.00 =    1130.00 FEET.

****************************************************************************
  FLOW PROCESS FROM NODE   2117.00 TO NODE   2131.00 IS CODE =  31
----------------------------------------------------------------------------
  >>>>>COMPUTE PIPE-FLOW TRAVEL TIME THRU SUBAREA<<<<<
  >>>>>USING COMPUTER-ESTIMATED PIPESIZE (NON-PRESSURE FLOW)<<<<<
============================================================================
  ELEVATION DATA: UPSTREAM(FEET) =   621.00  DOWNSTREAM(FEET) =   612.00
  FLOW LENGTH(FEET) =    50.00   MANNING'S N =  0.013
  DEPTH OF FLOW IN  15.0 INCH PIPE IS  11.6 INCHES
  PIPE-FLOW VELOCITY(FEET/SEC.) =  24.09
  ESTIMATED PIPE DIAMETER(INCH) =  15.00    NUMBER OF PIPES =   1
  PIPE-FLOW(CFS) =      24.49
  PIPE TRAVEL TIME(MIN.) =   0.03    Tc(MIN.) =    7.46
  LONGEST FLOWPATH FROM NODE   2108.00 TO NODE   2131.00 =    1180.00 FEET.

****************************************************************************
  FLOW PROCESS FROM NODE   2131.00 TO NODE   2131.00 IS CODE =  10
----------------------------------------------------------------------------
  >>>>>MAIN-STREAM MEMORY COPIED ONTO MEMORY BANK # 2 <<<<<
============================================================================

****************************************************************************
  FLOW PROCESS FROM NODE   2120.00 TO NODE   2121.00 IS CODE =  21
----------------------------------------------------------------------------
  >>>>>RATIONAL METHOD INITIAL SUBAREA ANALYSIS<<<<<
============================================================================
  *USER SPECIFIED(SUBAREA):
  USER-SPECIFIED RUNOFF COEFFICIENT = .3500
  S.C.S. CURVE NUMBER (AMC II) =   0
  INITIAL SUBAREA FLOW-LENGTH(FEET) =   100.00
  UPSTREAM ELEVATION(FEET) =    740.00
  DOWNSTREAM ELEVATION(FEET) =    730.00
  ELEVATION DIFFERENCE(FEET) =     10.00
  SUBAREA OVERLAND TIME OF FLOW(MIN.) =    6.267
  WARNING: THE MAXIMUM OVERLAND FLOW SLOPE, 10.%, IS USED IN Tc CALCULATION!
   100 YEAR RAINFALL INTENSITY(INCH/HOUR) =  7.288
  SUBAREA RUNOFF(CFS) =      0.26
  TOTAL AREA(ACRES) =      0.10   TOTAL RUNOFF(CFS) =      0.26

****************************************************************************
  FLOW PROCESS FROM NODE   2121.00 TO NODE   2125.00 IS CODE =  51
----------------------------------------------------------------------------
  >>>>>COMPUTE TRAPEZOIDAL CHANNEL FLOW<<<<<
  >>>>>TRAVELTIME THRU SUBAREA (EXISTING ELEMENT)<<<<<
============================================================================
  ELEVATION DATA: UPSTREAM(FEET) =    730.00  DOWNSTREAM(FEET) =    668.00
  CHANNEL LENGTH THRU SUBAREA(FEET) =   540.00   CHANNEL SLOPE =  0.1148
  CHANNEL BASE(FEET) =    3.00   "Z" FACTOR =   2.000
  MANNING'S FACTOR = 0.030   MAXIMUM DEPTH(FEET) =  10.00
   100 YEAR RAINFALL INTENSITY(INCH/HOUR) =  6.076
  *USER SPECIFIED(SUBAREA):
  USER-SPECIFIED RUNOFF COEFFICIENT = .3500
  S.C.S. CURVE NUMBER (AMC II) =   0
  TRAVEL TIME COMPUTED USING ESTIMATED FLOW(CFS) =       2.18
  TRAVEL TIME THRU SUBAREA BASED ON VELOCITY(FEET/SEC.) =   4.41
  AVERAGE FLOW DEPTH(FEET) =   0.15   TRAVEL TIME(MIN.) =   2.04
```

```
  Tc(MIN.) =    8.31
  SUBAREA AREA(ACRES) =     1.79       SUBAREA RUNOFF(CFS) =    3.81
  AREA-AVERAGE RUNOFF COEFFICIENT =  0.350
  TOTAL AREA(ACRES) =        1.9         PEAK FLOW RATE(CFS) =       4.02

  END OF SUBAREA CHANNEL FLOW HYDRAULICS:
  DEPTH(FEET) =  0.22   FLOW VELOCITY(FEET/SEC.) =   5.41
  LONGEST FLOWPATH FROM NODE   2120.00 TO NODE   2125.00 =     640.00 FEET.

****************************************************************************
  FLOW PROCESS FROM NODE   2125.00 TO NODE   2125.00 IS CODE =   1
----------------------------------------------------------------------------
  >>>>>DESIGNATE INDEPENDENT STREAM FOR CONFLUENCE<<<<<
============================================================================
  TOTAL NUMBER OF STREAMS =  2
  CONFLUENCE VALUES USED FOR INDEPENDENT STREAM  1 ARE:
  TIME OF CONCENTRATION(MIN.) =    8.31
  RAINFALL INTENSITY(INCH/HR) =   6.08
  TOTAL STREAM AREA(ACRES) =     1.89
  PEAK FLOW RATE(CFS) AT CONFLUENCE =      4.02

****************************************************************************
  FLOW PROCESS FROM NODE   2123.00 TO NODE   2124.00 IS CODE =  21
----------------------------------------------------------------------------
  >>>>>RATIONAL METHOD INITIAL SUBAREA ANALYSIS<<<<<
============================================================================
  *USER SPECIFIED(SUBAREA):
  USER-SPECIFIED RUNOFF COEFFICIENT = .3500
  S.C.S. CURVE NUMBER (AMC II) =   0
  INITIAL SUBAREA FLOW-LENGTH(FEET) =   100.00
  UPSTREAM ELEVATION(FEET) =    730.00
  DOWNSTREAM ELEVATION(FEET) =    724.00
  ELEVATION DIFFERENCE(FEET) =      6.00
  SUBAREA OVERLAND TIME OF FLOW(MIN.) =    7.430
   100 YEAR RAINFALL INTENSITY(INCH/HOUR) =  6.530
  SUBAREA RUNOFF(CFS) =      0.25
  TOTAL AREA(ACRES) =      0.11   TOTAL RUNOFF(CFS) =      0.25

****************************************************************************
  FLOW PROCESS FROM NODE   2124.00 TO NODE   2125.00 IS CODE =  51
----------------------------------------------------------------------------
  >>>>>COMPUTE TRAPEZOIDAL CHANNEL FLOW<<<<<
  >>>>>TRAVELTIME THRU SUBAREA (EXISTING ELEMENT)<<<<<
============================================================================
  ELEVATION DATA: UPSTREAM(FEET) =    724.00  DOWNSTREAM(FEET) =    668.00
  CHANNEL LENGTH THRU SUBAREA(FEET) =   500.00   CHANNEL SLOPE =  0.1120
  CHANNEL BASE(FEET) =    3.00   "Z" FACTOR =   2.000
  MANNING'S FACTOR = 0.030   MAXIMUM DEPTH(FEET) =  10.00
   100 YEAR RAINFALL INTENSITY(INCH/HOUR) =  5.549
  *USER SPECIFIED(SUBAREA):
  USER-SPECIFIED RUNOFF COEFFICIENT = .3500
  S.C.S. CURVE NUMBER (AMC II) =   0
  TRAVEL TIME COMPUTED USING ESTIMATED FLOW(CFS) =       1.51
  TRAVEL TIME THRU SUBAREA BASED ON VELOCITY(FEET/SEC.) =   3.91
  AVERAGE FLOW DEPTH(FEET) =   0.12   TRAVEL TIME(MIN.) =   2.13
  Tc(MIN.) =    9.56
  SUBAREA AREA(ACRES) =     1.29       SUBAREA RUNOFF(CFS) =    2.51
  AREA-AVERAGE RUNOFF COEFFICIENT =  0.350
  TOTAL AREA(ACRES) =        1.4         PEAK FLOW RATE(CFS) =       2.72

  END OF SUBAREA CHANNEL FLOW HYDRAULICS:
  DEPTH(FEET) =  0.17   FLOW VELOCITY(FEET/SEC.) =   4.71
  LONGEST FLOWPATH FROM NODE   2123.00 TO NODE   2125.00 =     600.00 FEET.
```

```
****************************************************************************
  FLOW PROCESS FROM NODE   2125.00 TO NODE   2125.00 IS CODE =   1
----------------------------------------------------------------------------
  >>>>>DESIGNATE INDEPENDENT STREAM FOR CONFLUENCE<<<<<
  >>>>>AND COMPUTE VARIOUS CONFLUENCED STREAM VALUES<<<<<
============================================================================
  TOTAL NUMBER OF STREAMS =  2
  CONFLUENCE VALUES USED FOR INDEPENDENT STREAM  2 ARE:
  TIME OF CONCENTRATION(MIN.) =    9.56
  RAINFALL INTENSITY(INCH/HR) =   5.55
  TOTAL STREAM AREA(ACRES) =     1.40
  PEAK FLOW RATE(CFS) AT CONFLUENCE =      2.72

  ** CONFLUENCE DATA **
  STREAM     RUNOFF       Tc      INTENSITY      AREA
  NUMBER      (CFS)     (MIN.)   (INCH/HOUR)    (ACRE)
      1        4.02     8.31        6.076          1.89
      2        2.72     9.56        5.549          1.40

  RAINFALL INTENSITY AND TIME OF CONCENTRATION RATIO
  CONFLUENCE FORMULA USED FOR  2 STREAMS.

  ** PEAK FLOW RATE TABLE **
  STREAM     RUNOFF      Tc      INTENSITY
  NUMBER      (CFS)    (MIN.)   (INCH/HOUR)
      1        6.38     8.31       6.076
      2        6.39     9.56       5.549

  COMPUTED CONFLUENCE ESTIMATES ARE AS FOLLOWS:
  PEAK FLOW RATE(CFS) =       6.39   Tc(MIN.) =    9.56
  TOTAL AREA(ACRES) =        3.3
  LONGEST FLOWPATH FROM NODE   2120.00 TO NODE   2125.00 =     640.00 FEET.

****************************************************************************
  FLOW PROCESS FROM NODE   2125.00 TO NODE   2126.00 IS CODE =  31
----------------------------------------------------------------------------
  >>>>>COMPUTE PIPE-FLOW TRAVEL TIME THRU SUBAREA<<<<<
  >>>>>USING COMPUTER-ESTIMATED PIPESIZE (NON-PRESSURE FLOW)<<<<<
============================================================================
  ELEVATION DATA: UPSTREAM(FEET) =   662.00  DOWNSTREAM(FEET) =   654.00
  FLOW LENGTH(FEET) =   120.00   MANNING'S N =  0.013
  DEPTH OF FLOW IN  12.0 INCH PIPE IS   7.6 INCHES
  PIPE-FLOW VELOCITY(FEET/SEC.) =  12.13
  ESTIMATED PIPE DIAMETER(INCH) =  12.00    NUMBER OF PIPES =   1
  PIPE-FLOW(CFS) =       6.39
  PIPE TRAVEL TIME(MIN.) =   0.16    Tc(MIN.) =    9.73
  LONGEST FLOWPATH FROM NODE   2120.00 TO NODE   2126.00 =     760.00 FEET.

****************************************************************************
  FLOW PROCESS FROM NODE   2126.00 TO NODE   2129.00 IS CODE =  52
----------------------------------------------------------------------------
  >>>>>COMPUTE NATURAL VALLEY CHANNEL FLOW<<<<<
  >>>>>TRAVELTIME THRU SUBAREA<<<<<
============================================================================
  ELEVATION DATA: UPSTREAM(FEET) =    654.00  DOWNSTREAM(FEET) =    642.00
  CHANNEL LENGTH THRU SUBAREA(FEET) =   120.00   CHANNEL SLOPE =  0.1000
  CHANNEL FLOW THRU SUBAREA(CFS) =       6.39
  FLOW VELOCITY(FEET/SEC) =   7.07 (PER LACFCD/RCFC&WCD HYDROLOGY MANUAL)
  TRAVEL TIME(MIN.) =   0.28   Tc(MIN.) =   10.01
  LONGEST FLOWPATH FROM NODE   2120.00 TO NODE   2129.00 =     880.00 FEET.

****************************************************************************
```

```
  FLOW PROCESS FROM NODE   2129.00 TO NODE   2129.00 IS CODE =   1
----------------------------------------------------------------------------
  >>>>>DESIGNATE INDEPENDENT STREAM FOR CONFLUENCE<<<<<
============================================================================
  TOTAL NUMBER OF STREAMS =  2
  CONFLUENCE VALUES USED FOR INDEPENDENT STREAM  1 ARE:
  TIME OF CONCENTRATION(MIN.) =   10.01
  RAINFALL INTENSITY(INCH/HR) =   5.39
  TOTAL STREAM AREA(ACRES) =     3.29
  PEAK FLOW RATE(CFS) AT CONFLUENCE =      6.39

****************************************************************************
  FLOW PROCESS FROM NODE   2127.00 TO NODE   2128.00 IS CODE =  21
----------------------------------------------------------------------------
  >>>>>RATIONAL METHOD INITIAL SUBAREA ANALYSIS<<<<<
============================================================================
  *USER SPECIFIED(SUBAREA):
  USER-SPECIFIED RUNOFF COEFFICIENT = .3500
  S.C.S. CURVE NUMBER (AMC II) =   0
  INITIAL SUBAREA FLOW-LENGTH(FEET) =   120.00
  UPSTREAM ELEVATION(FEET) =    676.00
  DOWNSTREAM ELEVATION(FEET) =    661.00
  ELEVATION DIFFERENCE(FEET) =     15.00
  SUBAREA OVERLAND TIME OF FLOW(MIN.) =    6.267
  WARNING: INITIAL SUBAREA FLOW PATH LENGTH IS GREATER THAN
           THE MAXIMUM OVERLAND FLOW LENGTH =   100.00
           (Reference: Table 3-1B of Hydrology Manual)
           THE MAXIMUM OVERLAND FLOW LENGTH IS USED IN Tc CALCULATION!
   100 YEAR RAINFALL INTENSITY(INCH/HOUR) =  7.288
  SUBAREA RUNOFF(CFS) =      0.61
  TOTAL AREA(ACRES) =      0.24   TOTAL RUNOFF(CFS) =      0.61

****************************************************************************
  FLOW PROCESS FROM NODE   2128.00 TO NODE   2129.00 IS CODE =  51
----------------------------------------------------------------------------
  >>>>>COMPUTE TRAPEZOIDAL CHANNEL FLOW<<<<<
  >>>>>TRAVELTIME THRU SUBAREA (EXISTING ELEMENT)<<<<<
============================================================================
  ELEVATION DATA: UPSTREAM(FEET) =    661.00  DOWNSTREAM(FEET) =    642.00
  CHANNEL LENGTH THRU SUBAREA(FEET) =   160.00   CHANNEL SLOPE =  0.1187
  CHANNEL BASE(FEET) =    3.00   "Z" FACTOR =   2.000
  MANNING'S FACTOR = 0.030   MAXIMUM DEPTH(FEET) =  10.00
   100 YEAR RAINFALL INTENSITY(INCH/HOUR) =  6.835
  *USER SPECIFIED(SUBAREA):
  USER-SPECIFIED RUNOFF COEFFICIENT = .3500
  S.C.S. CURVE NUMBER (AMC II) =   0
  TRAVEL TIME COMPUTED USING ESTIMATED FLOW(CFS) =       1.68
  TRAVEL TIME THRU SUBAREA BASED ON VELOCITY(FEET/SEC.) =   4.06
  AVERAGE FLOW DEPTH(FEET) =   0.13   TRAVEL TIME(MIN.) =   0.66
  Tc(MIN.) =    6.92
  SUBAREA AREA(ACRES) =     0.89       SUBAREA RUNOFF(CFS) =    2.13
  AREA-AVERAGE RUNOFF COEFFICIENT =  0.350
  TOTAL AREA(ACRES) =        1.1         PEAK FLOW RATE(CFS) =       2.70

  END OF SUBAREA CHANNEL FLOW HYDRAULICS:
  DEPTH(FEET) =  0.17   FLOW VELOCITY(FEET/SEC.) =   4.74
  LONGEST FLOWPATH FROM NODE   2127.00 TO NODE   2129.00 =     280.00 FEET.

****************************************************************************
  FLOW PROCESS FROM NODE   2129.00 TO NODE   2129.00 IS CODE =   1
----------------------------------------------------------------------------
  >>>>>DESIGNATE INDEPENDENT STREAM FOR CONFLUENCE<<<<<
  >>>>>AND COMPUTE VARIOUS CONFLUENCED STREAM VALUES<<<<<
```

```
==============================================================================
  TOTAL NUMBER OF STREAMS =  2
  CONFLUENCE VALUES USED FOR INDEPENDENT STREAM  2 ARE:
  TIME OF CONCENTRATION(MIN.) =    6.92
  RAINFALL INTENSITY(INCH/HR) =   6.83
  TOTAL STREAM AREA(ACRES) =     1.13
  PEAK FLOW RATE(CFS) AT CONFLUENCE =      2.70

  ** CONFLUENCE DATA **
  STREAM     RUNOFF       Tc      INTENSITY      AREA
  NUMBER      (CFS)     (MIN.)   (INCH/HOUR)    (ACRE)
      1        6.39    10.01        5.388          3.29
      2        2.70     6.92        6.835          1.13

  RAINFALL INTENSITY AND TIME OF CONCENTRATION RATIO
  CONFLUENCE FORMULA USED FOR  2 STREAMS.

  ** PEAK FLOW RATE TABLE **
  STREAM     RUNOFF      Tc      INTENSITY
  NUMBER      (CFS)    (MIN.)   (INCH/HOUR)
      1        7.74     6.92       6.835
      2        8.52    10.01       5.388

  COMPUTED CONFLUENCE ESTIMATES ARE AS FOLLOWS:
  PEAK FLOW RATE(CFS) =       8.52   Tc(MIN.) =   10.01
  TOTAL AREA(ACRES) =        4.4
  LONGEST FLOWPATH FROM NODE   2120.00 TO NODE   2129.00 =     880.00 FEET.

****************************************************************************
  FLOW PROCESS FROM NODE   2129.00 TO NODE   2131.00 IS CODE =  51
----------------------------------------------------------------------------
  >>>>>COMPUTE TRAPEZOIDAL CHANNEL FLOW<<<<<
  >>>>>TRAVELTIME THRU SUBAREA (EXISTING ELEMENT)<<<<<
==============================================================================
  ELEVATION DATA: UPSTREAM(FEET) =    642.00  DOWNSTREAM(FEET) =    612.00
  CHANNEL LENGTH THRU SUBAREA(FEET) =   550.00   CHANNEL SLOPE =  0.0545
  CHANNEL BASE(FEET) =    3.00   "Z" FACTOR =   2.000
  MANNING'S FACTOR = 0.030   MAXIMUM DEPTH(FEET) =  10.00
   100 YEAR RAINFALL INTENSITY(INCH/HOUR) =  4.925
  *USER SPECIFIED(SUBAREA):
  USER-SPECIFIED RUNOFF COEFFICIENT = .3500
  S.C.S. CURVE NUMBER (AMC II) =   0
  TRAVEL TIME COMPUTED USING ESTIMATED FLOW(CFS) =      12.46
  TRAVEL TIME THRU SUBAREA BASED ON VELOCITY(FEET/SEC.) =   6.13
  AVERAGE FLOW DEPTH(FEET) =   0.51   TRAVEL TIME(MIN.) =   1.49
  Tc(MIN.) =   11.51
  SUBAREA AREA(ACRES) =     4.57       SUBAREA RUNOFF(CFS) =    7.88
  AREA-AVERAGE RUNOFF COEFFICIENT =  0.350
  TOTAL AREA(ACRES) =        9.0         PEAK FLOW RATE(CFS) =      15.50

  END OF SUBAREA CHANNEL FLOW HYDRAULICS:
  DEPTH(FEET) =  0.57   FLOW VELOCITY(FEET/SEC.) =   6.58
  LONGEST FLOWPATH FROM NODE   2120.00 TO NODE   2131.00 =    1430.00 FEET.

****************************************************************************
  FLOW PROCESS FROM NODE   2131.00 TO NODE   2131.00 IS CODE =  11
----------------------------------------------------------------------------
  >>>>>CONFLUENCE MEMORY BANK # 1 WITH THE MAIN-STREAM MEMORY<<<<<
==============================================================================

  ** MAIN STREAM CONFLUENCE DATA **
  STREAM     RUNOFF      Tc      INTENSITY     AREA
  NUMBER      (CFS)    (MIN.)   (INCH/HOUR)   (ACRE)
```

```
    1       15.50    11.51       4.925        8.99
  LONGEST FLOWPATH FROM NODE   2120.00 TO NODE   2131.00 =    1430.00 FEET.

  ** MEMORY BANK #  1 CONFLUENCE DATA **
  STREAM     RUNOFF      Tc      INTENSITY     AREA
  NUMBER      (CFS)    (MIN.)   (INCH/HOUR)   (ACRE)
    1       421.86    13.40       4.465      196.02
  LONGEST FLOWPATH FROM NODE   2001.00 TO NODE   2131.00 =    5440.00 FEET.

  ** PEAK FLOW RATE TABLE **
  STREAM    RUNOFF       Tc      INTENSITY
  NUMBER     (CFS)     (MIN.)   (INCH/HOUR)
    1      377.76      11.51        4.925
    2      435.91      13.40        4.465

  COMPUTED CONFLUENCE ESTIMATES ARE AS FOLLOWS:
  PEAK FLOW RATE(CFS) =     435.91   Tc(MIN.) =   13.40
  TOTAL AREA(ACRES) =      205.0

****************************************************************************
  FLOW PROCESS FROM NODE   2131.00 TO NODE   2131.00 IS CODE =  11
----------------------------------------------------------------------------
  >>>>>CONFLUENCE MEMORY BANK # 2 WITH THE MAIN-STREAM MEMORY<<<<<
============================================================================

  ** MAIN STREAM CONFLUENCE DATA **
  STREAM     RUNOFF      Tc      INTENSITY     AREA
  NUMBER      (CFS)    (MIN.)   (INCH/HOUR)   (ACRE)
    1       435.91    13.40       4.465      205.01
  LONGEST FLOWPATH FROM NODE   2001.00 TO NODE   2131.00 =    5440.00 FEET.

  ** MEMORY BANK #  2 CONFLUENCE DATA **
  STREAM     RUNOFF      Tc      INTENSITY     AREA
  NUMBER      (CFS)    (MIN.)   (INCH/HOUR)   (ACRE)
    1        24.49     7.46       6.514        5.34
  LONGEST FLOWPATH FROM NODE   2108.00 TO NODE   2131.00 =    1180.00 FEET.

  ** PEAK FLOW RATE TABLE **
  STREAM    RUNOFF       Tc      INTENSITY
  NUMBER     (CFS)     (MIN.)   (INCH/HOUR)
    1      267.18       7.46        6.514
    2      452.69      13.40        4.465

  COMPUTED CONFLUENCE ESTIMATES ARE AS FOLLOWS:
  PEAK FLOW RATE(CFS) =     452.69   Tc(MIN.) =   13.40
  TOTAL AREA(ACRES) =      210.3

****************************************************************************
  FLOW PROCESS FROM NODE   2131.00 TO NODE   2131.00 IS CODE =  12
----------------------------------------------------------------------------
  >>>>>CLEAR MEMORY BANK # 1 <<<<<
============================================================================

****************************************************************************
  FLOW PROCESS FROM NODE   2131.00 TO NODE   2131.00 IS CODE =  12
----------------------------------------------------------------------------
  >>>>>CLEAR MEMORY BANK # 2 <<<<<
============================================================================

****************************************************************************
  FLOW PROCESS FROM NODE   2131.00 TO NODE   2132.00 IS CODE =  31
----------------------------------------------------------------------------
  >>>>>COMPUTE PIPE-FLOW TRAVEL TIME THRU SUBAREA<<<<<
```

```
  >>>>>USING COMPUTER-ESTIMATED PIPESIZE (NON-PRESSURE FLOW)<<<<<
==============================================================================
  ELEVATION DATA: UPSTREAM(FEET) =   612.00  DOWNSTREAM(FEET) =   611.50
  FLOW LENGTH(FEET) =    90.00   MANNING'S N =  0.013
  DEPTH OF FLOW IN  87.0 INCH PIPE IS  65.3 INCHES
  PIPE-FLOW VELOCITY(FEET/SEC.) =  13.62
  ESTIMATED PIPE DIAMETER(INCH) =  87.00    NUMBER OF PIPES =   1
  PIPE-FLOW(CFS) =     452.69
  PIPE TRAVEL TIME(MIN.) =   0.11    Tc(MIN.) =   13.51
  LONGEST FLOWPATH FROM NODE   2001.00 TO NODE   2132.00 =    5530.00 FEET.

****************************************************************************
  FLOW PROCESS FROM NODE   2132.00 TO NODE   2200.00 IS CODE =  52
----------------------------------------------------------------------------
  >>>>>COMPUTE NATURAL VALLEY CHANNEL FLOW<<<<<
  >>>>>TRAVELTIME THRU SUBAREA<<<<<
==============================================================================
  ELEVATION DATA: UPSTREAM(FEET) =    611.50  DOWNSTREAM(FEET) =    608.00
  CHANNEL LENGTH THRU SUBAREA(FEET) =   370.00   CHANNEL SLOPE =  0.0095
  CHANNEL FLOW THRU SUBAREA(CFS) =     452.69
  FLOW VELOCITY(FEET/SEC) =   7.38 (PER LACFCD/RCFC&WCD HYDROLOGY MANUAL)
  TRAVEL TIME(MIN.) =   0.84   Tc(MIN.) =   14.34
  LONGEST FLOWPATH FROM NODE   2001.00 TO NODE   2200.00 =    5900.00 FEET.

****************************************************************************
  FLOW PROCESS FROM NODE   2200.00 TO NODE   2200.00 IS CODE =   1
----------------------------------------------------------------------------
  >>>>>DESIGNATE INDEPENDENT STREAM FOR CONFLUENCE<<<<<
==============================================================================
  TOTAL NUMBER OF STREAMS =  2
  CONFLUENCE VALUES USED FOR INDEPENDENT STREAM  1 ARE:
  TIME OF CONCENTRATION(MIN.) =   14.34
  RAINFALL INTENSITY(INCH/HR) =   4.27
  TOTAL STREAM AREA(ACRES) =   210.35
  PEAK FLOW RATE(CFS) AT CONFLUENCE =    452.69

****************************************************************************
  FLOW PROCESS FROM NODE   2132.10 TO NODE   2132.20 IS CODE =  21
----------------------------------------------------------------------------
  >>>>>RATIONAL METHOD INITIAL SUBAREA ANALYSIS<<<<<
==============================================================================
  *USER SPECIFIED(SUBAREA):
  USER-SPECIFIED RUNOFF COEFFICIENT = .4100
  S.C.S. CURVE NUMBER (AMC II) =   0
  INITIAL SUBAREA FLOW-LENGTH(FEET) =   100.00
  UPSTREAM ELEVATION(FEET) =    696.00
  DOWNSTREAM ELEVATION(FEET) =    695.00
  ELEVATION DIFFERENCE(FEET) =      1.00
  SUBAREA OVERLAND TIME OF FLOW(MIN.) =   10.013
  WARNING: INITIAL SUBAREA FLOW PATH LENGTH IS GREATER THAN
           THE MAXIMUM OVERLAND FLOW LENGTH =    65.00
           (Reference: Table 3-1B of Hydrology Manual)
           THE MAXIMUM OVERLAND FLOW LENGTH IS USED IN Tc CALCULATION!
   100 YEAR RAINFALL INTENSITY(INCH/HOUR) =  5.387
  SUBAREA RUNOFF(CFS) =      0.24
  TOTAL AREA(ACRES) =      0.11   TOTAL RUNOFF(CFS) =      0.24

****************************************************************************
  FLOW PROCESS FROM NODE   2132.20 TO NODE   2132.30 IS CODE =  51
----------------------------------------------------------------------------
  >>>>>COMPUTE TRAPEZOIDAL CHANNEL FLOW<<<<<
  >>>>>TRAVELTIME THRU SUBAREA (EXISTING ELEMENT)<<<<<
==============================================================================
```

```
  ELEVATION DATA: UPSTREAM(FEET) =    695.00  DOWNSTREAM(FEET) =    664.00
  CHANNEL LENGTH THRU SUBAREA(FEET) =   375.00   CHANNEL SLOPE =  0.0827
  CHANNEL BASE(FEET) =    3.00   "Z" FACTOR =   2.000
  MANNING'S FACTOR = 0.030   MAXIMUM DEPTH(FEET) =  10.00
   100 YEAR RAINFALL INTENSITY(INCH/HOUR) =  4.852
  *USER SPECIFIED(SUBAREA):
  USER-SPECIFIED RUNOFF COEFFICIENT = .4100
  S.C.S. CURVE NUMBER (AMC II) =   0
  TRAVEL TIME COMPUTED USING ESTIMATED FLOW(CFS) =       1.63
  TRAVEL TIME THRU SUBAREA BASED ON VELOCITY(FEET/SEC.) =   3.54
  AVERAGE FLOW DEPTH(FEET) =   0.14   TRAVEL TIME(MIN.) =   1.76
  Tc(MIN.) =   11.78
  SUBAREA AREA(ACRES) =     1.39       SUBAREA RUNOFF(CFS) =    2.77
  AREA-AVERAGE RUNOFF COEFFICIENT =  0.410
  TOTAL AREA(ACRES) =        1.5         PEAK FLOW RATE(CFS) =       2.98

  END OF SUBAREA CHANNEL FLOW HYDRAULICS:
  DEPTH(FEET) =  0.20   FLOW VELOCITY(FEET/SEC.) =   4.36
  LONGEST FLOWPATH FROM NODE   2132.10 TO NODE   2132.30 =     475.00 FEET.

****************************************************************************
  FLOW PROCESS FROM NODE   2132.30 TO NODE   2200.00 IS CODE =  51
----------------------------------------------------------------------------
  >>>>>COMPUTE TRAPEZOIDAL CHANNEL FLOW<<<<<
  >>>>>TRAVELTIME THRU SUBAREA (EXISTING ELEMENT)<<<<<
============================================================================
  ELEVATION DATA: UPSTREAM(FEET) =    664.00  DOWNSTREAM(FEET) =    608.00
  CHANNEL LENGTH THRU SUBAREA(FEET) =   800.00   CHANNEL SLOPE =  0.0700
  CHANNEL BASE(FEET) =    3.00   "Z" FACTOR =   2.000
  MANNING'S FACTOR = 0.030   MAXIMUM DEPTH(FEET) =  10.00
   100 YEAR RAINFALL INTENSITY(INCH/HOUR) =  4.333
  *USER SPECIFIED(SUBAREA):
  USER-SPECIFIED RUNOFF COEFFICIENT = .4100
  S.C.S. CURVE NUMBER (AMC II) =   0
  TRAVEL TIME COMPUTED USING ESTIMATED FLOW(CFS) =       8.20
  TRAVEL TIME THRU SUBAREA BASED ON VELOCITY(FEET/SEC.) =   5.91
  AVERAGE FLOW DEPTH(FEET) =   0.37   TRAVEL TIME(MIN.) =   2.26
  Tc(MIN.) =   14.03
  SUBAREA AREA(ACRES) =     5.86       SUBAREA RUNOFF(CFS) =   10.41
  AREA-AVERAGE RUNOFF COEFFICIENT =  0.410
  TOTAL AREA(ACRES) =        7.4         PEAK FLOW RATE(CFS) =      13.08

  END OF SUBAREA CHANNEL FLOW HYDRAULICS:
  DEPTH(FEET) =  0.49   FLOW VELOCITY(FEET/SEC.) =   6.78
  LONGEST FLOWPATH FROM NODE   2132.10 TO NODE   2200.00 =    1275.00 FEET.

****************************************************************************
  FLOW PROCESS FROM NODE   2200.00 TO NODE   2200.00 IS CODE =   1
----------------------------------------------------------------------------
  >>>>>DESIGNATE INDEPENDENT STREAM FOR CONFLUENCE<<<<<
  >>>>>AND COMPUTE VARIOUS CONFLUENCED STREAM VALUES<<<<<
============================================================================
  TOTAL NUMBER OF STREAMS =  2
  CONFLUENCE VALUES USED FOR INDEPENDENT STREAM  2 ARE:
  TIME OF CONCENTRATION(MIN.) =   14.03
  RAINFALL INTENSITY(INCH/HR) =   4.33
  TOTAL STREAM AREA(ACRES) =     7.36
  PEAK FLOW RATE(CFS) AT CONFLUENCE =     13.08

  ** CONFLUENCE DATA **
  STREAM     RUNOFF       Tc      INTENSITY      AREA
  NUMBER      (CFS)     (MIN.)   (INCH/HOUR)    (ACRE)
      1      452.69    14.34        4.272        210.35
```

```
    2       13.08    14.03        4.333          7.36

  RAINFALL INTENSITY AND TIME OF CONCENTRATION RATIO
  CONFLUENCE FORMULA USED FOR  2 STREAMS.

  ** PEAK FLOW RATE TABLE **
  STREAM     RUNOFF      Tc      INTENSITY
  NUMBER      (CFS)    (MIN.)   (INCH/HOUR)
      1      455.98    14.03       4.333
      2      465.59    14.34       4.272

  COMPUTED CONFLUENCE ESTIMATES ARE AS FOLLOWS:
  PEAK FLOW RATE(CFS) =     465.59   Tc(MIN.) =   14.34
  TOTAL AREA(ACRES) =      217.7
  LONGEST FLOWPATH FROM NODE   2001.00 TO NODE   2200.00 =    5900.00 FEET.
============================================================================
  END OF STUDY SUMMARY:
  TOTAL AREA(ACRES)     =      217.7  TC(MIN.) =     14.34
  PEAK FLOW RATE(CFS)   =     465.59
============================================================================
============================================================================
  END OF RATIONAL METHOD ANALYSIS
```

BASIN C

FUSCOE ENGINEERING
6390 Greenwich Drive, Suite 170
San Diego, California 92122
tel 858.554.1500 ◦ fax 858.597.0335
www.fuscoe.com

Valiano
Proposed Hydrology
100 Year Design Storm
2690-007-02

Date: Oct 2015

P-300.dat
Run Name: 300 Series

Node to Node		Code	Elev 1 (feet)	Elev 2 (feet)	Length (feet)	C or Fric Co.	Area (ac.)	Comments
300	301	2	1205	1200	70	0.35	0.10	
301	302	5	1200	854	1780	0.35	24.06	
302	302	1	-	-	-	-	-	1 of 2
303	304	2	1090	1086	70	0.35	0.11	
304	302	5	1086	854	1350	0.35	17.12	
302	302	1	-	-	-	-	-	2 of 2
302	303	5	854	764	810	0.35	7.25	
303	303	1	-	-	-	-	-	1 of 2
305.5	306.5	2	978	958	70	0.35	0.22	
306.5	307.5	5	958	810	450	0.35	3.65	
307.5	308.5	3	804	788	450			
308.5	303	3	788	764	460			
303	303	1						2 of 2
303	305	5	764	742	300	0.35	1.94	
305	305	10						SAVE TO BANK 1
300	310	2	1205	1200	70	0.35	0.11	
310	311	5	1200	1100	800	0.35	5.47	
311	312	5	1100	858	1050	0.35	8.23	
312	313	9	858	832	310	0.35	1.37	
313	313	1						1 OF 2
314	315	2	896	872	70	0.35	0.16	
315	313	3	868	832	85		-	
313	313	1	-	-	-	-	-	2 of 2
313	317	3	832	820	250		-	
317	317	1	-	-	-	-	-	1 of 3
318	319	2	952	938	70	0.35	0.10	
319	317	5	938	820	640	0.35	4.09	
317	317	1	-	-	-	-	-	2 of 3
300	320	2	1205	1200	70	0.35	0.10	
320	321	5	1200	1075	815	0.35	6.99	
321	322	5	1075	935	620	0.35	12.76	
322	317	5	935	820	790	0.35	4.93	
317	317	1	-	-	-	-	-	3 of 3

317	323	9	820	770	440	0.35	3.77	
323	323	1	-	-	-	-	-	1 of 2
324	325	2	944	929	70	0.35	0.10	
325	326	5	929	906	175	0.35	0.54	
326	327	9	906	871	310	0.35	0.80	
327	328	3	865	820	780		-	
328	323	5	820	770	200			
323	323	1	-	-	-	-	-	2 OF 2
323	329	3	767	750	280		-	
329	329.5	5	750	734	140			
329.5	329.5	10						SAVE TO BANK 2
331	332	2	872	871	70	0.71	0.23	
332	333	6	871	817	540	0.71	1.48	1 side
333	334	3	811	810	35		-	
334	334	1						1 of 2
335	336	2	872	871	70	0.71	0.22	
336	334	6	871	817	600	0.71	1.93	one side
334	334	1	-	-	-	-	-	2 of 2
334	337	3	810	759	205			
337	329.5	3	759	734	100			
329.5	329.5	11						ADD BANK 2
329.5	329.5	12						CLEAR BANK 2
329.5	330	5	734	707	600	0.35	6.02	
330	309.5	3	707	706	83			
309.5	309	5	700	692	440	0.35	0.85	
309	309	10	-	-	-	-	-	SAVE TO BANK 2
339	340	2	818	817	70	0.71	0.09	
340	341	6	817	790	370	0.71	0.37	1 side of street
341	338	3	784	783	12	0.01		
338	338	1	-	-	-	-	-	1 of 2
342	343	2	818	817	70	0.71	0.04	
343	344	6	817	790	345	0.71	0.16	1 side of street
344	338	3	784	783	12		-	
338	338	1	-	-	-	-	-	2 of 2
338	345	3	783	782	55		-	
345	345	10	-	-	-	-	-	Save to Bank 3
346	347	2	836	835	70	0.71	0.26	
347	348	6	835	820	350	0.71	2.09	1 side of street
348	349	3	814	813	65		-	
349	349	1	-	-	-	-	-	1 of 2
350	351	2	882	832	70	0.35	0.33	
351	352	6	832	822	205	0.71	1.11	1 side of street

352	349	3	816	813	23		-	
349	349	1	-	-	-	-	-	2 of 2
349	353	3	813	782	380		-	
353	353	1	-	-	-	-	-	1 of 2
354	355	2	825	813	70	0.71	0.19	
355	356	6	813	784	280	0.71	1.63	1 side of street
356	353	3	784	783	23		-	
353	353	1	-	-	-	-	-	2 of 2
353	345	3	783	782	35		-	
345	345	11	-	-	-	-	-	Confluence with Bank 3
345	345	12	-	-	-	-	-	Clear Bank 3
345	357	3	782	743	480			
357	357	1						1 of 2
361	362	2	786	774	145	0.71	0.09	
362	363	6	774	750	350	0.71	1.11	1 side of street
363	357	3	744	743	23		-	
357	357	1	-	-	-	-	-	2 of 2
357	360	3	743	742	2		-	
360	360	1	-	-	-	-	-	1 of 2
358	359	2	790	780	70	0.71	0.16	
359	360	6	780	750	375	0.71	0.34	1 sides of street
360	360	1	-	-				2 OF 2
360	305.5	3	744	743	40			
305.5	305.5	1						1 OF 2
306	307	2	834	780	70	0.35	0.45	
307	305.5	5	780	743	250	0.35	2.47	
305.5	305.5	1						2 OF 2
305.5	305	3	743	742	32			
305	305	11						ADD BANK 1
305	305	12						CLEAR BANK 1
305	308	3	742	736	280		-	
308	308	10						SAVE TO BANK 1
368	369	2	757	749	70	0.71	0.25	
369	370	6	749	746	225	0.71	0.58	
370	364	3	740	735	20		-	
364	364	1	-	-	-	-	-	1 OF 2
365	366	2	754	749	70	0.71	0.10	
366	367	6	749	746	230	0.71	0.48	1side of street
367	364	3	740	735	3		-	
364	364	1	-	-	-	-	-	2 OF 2
364	364	10						SAVE TO BANK 3

372	373	2	760	755	70	0.71	0.25	
373	374	6	755	745	203	0.71	1.56	
374	375	3	739	738	3		-	
375	375	1	-	-	-	-	-	1 of 2
376	377	2	762	755	70	0.71	0.20	
377	378	6	755	745	210	0.71	1.64	
378	375	3	739	738	21		-	
375	375	1	-	-	-	-	-	2 of 2
375	364	3	738	735	275		-	
364	364	11	-	-	-	-	-	Confluence with Bank
364	371	3	735	734	50	-	-	
371	308	3	734	732	250	-	-	
308	308	8	-	-	-	0.35	0.81	
308	308	11	-	-	-	-	-	ADD BANK 1
308	308	12	-	-	-	-	-	CLEAR BANK 1
308	309	5	736	692	680	0.35	3.65	
309	309	10	-	-	-	-	-	SAVE TO BANK 1
3007	3008	2	815	766	70	0.35	0.54	
3008	3009	5	766	709	680	0.35	4.95	
3009	3009	1	-	-	-	-	-	1 of 2
3010	3011	2	751	744	70	0.35	0.43	
3011	3009	5	744	709	400	0.35	4.82	
3009	3009	1	-	-	-	-	-	2 of 2
3009	395	3	709	694	700			
395	309	5	694	692	200			
309	309	11						ADD BANK 1
309	309	11						ADD BANK 2
309	309	12						CLEAR BANK 1
309	309	12						CLEAR BANK 2
390	3006	5	692	676	710	0.35	5.89	
3006	3006	10						SAVE TO BANK 1
392	393	2	724	722	70	0.71	0.22	
393	394	6	722	709	420	0.71	3.26	
394	396	3	703	699	335	0.01	-	
396	396	1						1 OF 2
397	398	2	708	707	70	0.71	0.24	
398	396	6	707	705	185	0.71	2.01	
396	396	1						2 OF 2
396	3004	3	699	686	350		-	
3004	3004	1	-	-	-	-	-	1 of 2

3001	3002	2	706	704	70	0.71	0.31	
3002	3003	6	704	691	335	0.71	3.26	
3003	3004	3	687	686	25		-	
3004	3004	1	-	-	-	-	-	2 of 2
3004	3005	3	686	682	100	0.01	-	
3005	3005	1						1 OF 2
387	388	2	760	754	100	0.71	0.10	
388	389	6	754	699	800	0.71	3.86	2 sides of street
389	3005	3	693	682	200			
3005	3005	1						2 of 2
3005	3006	3	678	676	100			
3006	3006	11						ADD BANK 1
3006	3006	12						CLEAR BANK 1
3006	3006	1	-	-	-	-	-	1 OF 2
3014	3012	2	739	710	70	0.35	0.33	
3012	3006	9	710	675	650	0.01	0.77	
3006	3006	1	-	-	-	-	-	2 OF 2
3006	3013	5	675	670	260	0.35	0.50	
3013	3013	1						1 OF 2
3016	3017	2	708	688	70	0.35	0.24	
3017	3013	5	688	670	505	0.35	1.76	
3013	3013	1						2 OF 2

```
****************************************************************************

            RATIONAL METHOD HYDROLOGY COMPUTER PROGRAM PACKAGE
            Reference: SAN DIEGO COUNTY FLOOD CONTROL DISTRICT
                         2003,1985,1981 HYDROLOGY MANUAL
         (c) Copyright 1982-2014 Advanced Engineering Software (aes)
             Ver. 21.0 Release Date: 06/01/2014  License ID 1355

                          Analysis prepared by:

                            Fuscoe Engineering
                           6390 Greenwich Drive
                                Suite 170
                           San Diego, CA 92122

 ************************** DESCRIPTION OF STUDY **************************
* VALIANO - 300 SERIES                                                    *
* PROPOSED HYDROLOGY 100 YEAR DESIGN STORM                                *
* OCTOBER 16, 2015                                                        *
 **************************************************************************

  FILE NAME: P-300.DAT
  TIME/DATE OF STUDY: 14:17 10/16/2015
----------------------------------------------------------------------------
  USER SPECIFIED HYDROLOGY AND HYDRAULIC MODEL INFORMATION:
----------------------------------------------------------------------------
  2003 SAN DIEGO MANUAL CRITERIA

  USER SPECIFIED STORM EVENT(YEAR) = 100.00
  6-HOUR DURATION PRECIPITATION (INCHES) =   3.200
  SPECIFIED MINIMUM PIPE SIZE(INCH) =  18.00
  SPECIFIED PERCENT OF GRADIENTS(DECIMAL) TO USE FOR FRICTION SLOPE = 0.90
  SAN DIEGO HYDROLOGY MANUAL "C"-VALUES USED FOR RATIONAL METHOD
  NOTE: USE MODIFIED RATIONAL METHOD PROCEDURES FOR CONFLUENCE ANALYSIS
  *USER-DEFINED STREET-SECTIONS FOR COUPLED PIPEFLOW AND STREETFLOW MODEL*
     HALF-  CROWN TO   STREET-CROSSFALL:   CURB  GUTTER-GEOMETRIES:  MANNING
     WIDTH  CROSSFALL  IN-  / OUT-/PARK-  HEIGHT  WIDTH  LIP   HIKE  FACTOR
NO.   (FT)     (FT)    SIDE / SIDE/ WAY    (FT)    (FT)  (FT)  (FT)    (n)
===  =====  =========  =================  ======  ===== ====== ===== =======
  1   12.0      6.0    0.020/0.020/0.020   0.33    0.10 0.0100 0.010 0.0150

  GLOBAL STREET FLOW-DEPTH CONSTRAINTS:
    1. Relative Flow-Depth =  0.33 FEET
       as (Maximum Allowable Street Flow Depth) - (Top-of-Curb)
    2. (Depth)*(Velocity) Constraint =  6.0 (FT*FT/S)
  *SIZE PIPE WITH A FLOW CAPACITY GREATER THAN
   OR EQUAL TO THE UPSTREAM TRIBUTARY PIPE.*

****************************************************************************
  FLOW PROCESS FROM NODE    300.00 TO NODE    301.00 IS CODE =  21
----------------------------------------------------------------------------
  >>>>>RATIONAL METHOD INITIAL SUBAREA ANALYSIS<<<<<
============================================================================
  *USER SPECIFIED(SUBAREA):
  USER-SPECIFIED RUNOFF COEFFICIENT = .3500
  S.C.S. CURVE NUMBER (AMC II) =   0
  INITIAL SUBAREA FLOW-LENGTH(FEET) =    70.00
  UPSTREAM ELEVATION(FEET) =   1205.00
  DOWNSTREAM ELEVATION(FEET) =   1200.00
  ELEVATION DIFFERENCE(FEET) =      5.00
  SUBAREA OVERLAND TIME OF FLOW(MIN.) =    5.865
   100 YEAR RAINFALL INTENSITY(INCH/HOUR) =  7.606
```

```
  SUBAREA RUNOFF(CFS) =      0.27
  TOTAL AREA(ACRES) =      0.10   TOTAL RUNOFF(CFS) =      0.27

****************************************************************************
  FLOW PROCESS FROM NODE    301.00 TO NODE    302.00 IS CODE =  51
----------------------------------------------------------------------------
  >>>>>COMPUTE TRAPEZOIDAL CHANNEL FLOW<<<<<
  >>>>>TRAVELTIME THRU SUBAREA (EXISTING ELEMENT)<<<<<
============================================================================
  ELEVATION DATA: UPSTREAM(FEET) =   1200.00  DOWNSTREAM(FEET) =    854.00
  CHANNEL LENGTH THRU SUBAREA(FEET) =  1780.00   CHANNEL SLOPE =  0.1944
  CHANNEL BASE(FEET) =    3.00   "Z" FACTOR =   2.000
  MANNING'S FACTOR = 0.030   MAXIMUM DEPTH(FEET) =  10.00
   100 YEAR RAINFALL INTENSITY(INCH/HOUR) =  6.054
  *USER SPECIFIED(SUBAREA):
  USER-SPECIFIED RUNOFF COEFFICIENT = .3500
  S.C.S. CURVE NUMBER (AMC II) =   0
  TRAVEL TIME COMPUTED USING ESTIMATED FLOW(CFS) =      26.05
  TRAVEL TIME THRU SUBAREA BASED ON VELOCITY(FEET/SEC.) =  11.91
  AVERAGE FLOW DEPTH(FEET) =   0.54   TRAVEL TIME(MIN.) =   2.49
  Tc(MIN.) =    8.36
  SUBAREA AREA(ACRES) =    24.06       SUBAREA RUNOFF(CFS) =   50.98
  AREA-AVERAGE RUNOFF COEFFICIENT =  0.350
  TOTAL AREA(ACRES) =       24.2         PEAK FLOW RATE(CFS) =      51.19

  END OF SUBAREA CHANNEL FLOW HYDRAULICS:
  DEPTH(FEET) =  0.77   FLOW VELOCITY(FEET/SEC.) =  14.56
  LONGEST FLOWPATH FROM NODE    300.00 TO NODE    302.00 =    1850.00 FEET.

****************************************************************************
  FLOW PROCESS FROM NODE    302.00 TO NODE    302.00 IS CODE =   1
----------------------------------------------------------------------------
  >>>>>DESIGNATE INDEPENDENT STREAM FOR CONFLUENCE<<<<<
============================================================================
  TOTAL NUMBER OF STREAMS =  2
  CONFLUENCE VALUES USED FOR INDEPENDENT STREAM  1 ARE:
  TIME OF CONCENTRATION(MIN.) =    8.36
  RAINFALL INTENSITY(INCH/HR) =   6.05
  TOTAL STREAM AREA(ACRES) =    24.16
  PEAK FLOW RATE(CFS) AT CONFLUENCE =     51.19

****************************************************************************
  FLOW PROCESS FROM NODE    303.00 TO NODE    304.00 IS CODE =  21
----------------------------------------------------------------------------
  >>>>>RATIONAL METHOD INITIAL SUBAREA ANALYSIS<<<<<
============================================================================
  *USER SPECIFIED(SUBAREA):
  USER-SPECIFIED RUNOFF COEFFICIENT = .3500
  S.C.S. CURVE NUMBER (AMC II) =   0
  INITIAL SUBAREA FLOW-LENGTH(FEET) =    70.00
  UPSTREAM ELEVATION(FEET) =   1090.00
  DOWNSTREAM ELEVATION(FEET) =   1086.00
  ELEVATION DIFFERENCE(FEET) =      4.00
  SUBAREA OVERLAND TIME OF FLOW(MIN.) =    6.318
   100 YEAR RAINFALL INTENSITY(INCH/HOUR) =  7.250
  SUBAREA RUNOFF(CFS) =      0.28
  TOTAL AREA(ACRES) =      0.11   TOTAL RUNOFF(CFS) =      0.28

****************************************************************************
  FLOW PROCESS FROM NODE    304.00 TO NODE    302.00 IS CODE =  51
----------------------------------------------------------------------------
  >>>>>COMPUTE TRAPEZOIDAL CHANNEL FLOW<<<<<
  >>>>>TRAVELTIME THRU SUBAREA (EXISTING ELEMENT)<<<<<
```

```
==============================================================================
  ELEVATION DATA: UPSTREAM(FEET) =   1086.00  DOWNSTREAM(FEET) =    854.00
  CHANNEL LENGTH THRU SUBAREA(FEET) =  1350.00   CHANNEL SLOPE =  0.1719
  CHANNEL BASE(FEET) =    3.00   "Z" FACTOR =   2.000
  MANNING'S FACTOR = 0.030   MAXIMUM DEPTH(FEET) =  10.00
   100 YEAR RAINFALL INTENSITY(INCH/HOUR) =  5.989
  *USER SPECIFIED(SUBAREA):
  USER-SPECIFIED RUNOFF COEFFICIENT = .3500
  S.C.S. CURVE NUMBER (AMC II) =   0
  TRAVEL TIME COMPUTED USING ESTIMATED FLOW(CFS) =      18.36
  TRAVEL TIME THRU SUBAREA BASED ON VELOCITY(FEET/SEC.) =  10.32
  AVERAGE FLOW DEPTH(FEET) =   0.45   TRAVEL TIME(MIN.) =   2.18
  Tc(MIN.) =    8.50
  SUBAREA AREA(ACRES) =    17.12       SUBAREA RUNOFF(CFS) =   35.88
  AREA-AVERAGE RUNOFF COEFFICIENT =  0.350
  TOTAL AREA(ACRES) =       17.2         PEAK FLOW RATE(CFS) =      36.11

  END OF SUBAREA CHANNEL FLOW HYDRAULICS:
  DEPTH(FEET) =  0.66   FLOW VELOCITY(FEET/SEC.) =  12.64
  LONGEST FLOWPATH FROM NODE    303.00 TO NODE    302.00 =    1420.00 FEET.

****************************************************************************
  FLOW PROCESS FROM NODE    302.00 TO NODE    302.00 IS CODE =   1
----------------------------------------------------------------------------
  >>>>>DESIGNATE INDEPENDENT STREAM FOR CONFLUENCE<<<<<
  >>>>>AND COMPUTE VARIOUS CONFLUENCED STREAM VALUES<<<<<
==============================================================================
  TOTAL NUMBER OF STREAMS =  2
  CONFLUENCE VALUES USED FOR INDEPENDENT STREAM  2 ARE:
  TIME OF CONCENTRATION(MIN.) =    8.50
  RAINFALL INTENSITY(INCH/HR) =   5.99
  TOTAL STREAM AREA(ACRES) =    17.23
  PEAK FLOW RATE(CFS) AT CONFLUENCE =     36.11

  ** CONFLUENCE DATA **
  STREAM     RUNOFF       Tc      INTENSITY      AREA
  NUMBER      (CFS)     (MIN.)   (INCH/HOUR)    (ACRE)
      1       51.19     8.36        6.054         24.16
      2       36.11     8.50        5.989         17.23

  RAINFALL INTENSITY AND TIME OF CONCENTRATION RATIO
  CONFLUENCE FORMULA USED FOR  2 STREAMS.

  ** PEAK FLOW RATE TABLE **
  STREAM     RUNOFF      Tc      INTENSITY
  NUMBER      (CFS)    (MIN.)   (INCH/HOUR)
      1       86.70     8.36       6.054
      2       86.75     8.50       5.989

  COMPUTED CONFLUENCE ESTIMATES ARE AS FOLLOWS:
  PEAK FLOW RATE(CFS) =      86.75   Tc(MIN.) =    8.50
  TOTAL AREA(ACRES) =       41.4
  LONGEST FLOWPATH FROM NODE    300.00 TO NODE    302.00 =    1850.00 FEET.

****************************************************************************
  FLOW PROCESS FROM NODE    302.00 TO NODE    303.00 IS CODE =  51
----------------------------------------------------------------------------
  >>>>>COMPUTE TRAPEZOIDAL CHANNEL FLOW<<<<<
  >>>>>TRAVELTIME THRU SUBAREA (EXISTING ELEMENT)<<<<<
==============================================================================
  ELEVATION DATA: UPSTREAM(FEET) =    854.00  DOWNSTREAM(FEET) =    764.00
  CHANNEL LENGTH THRU SUBAREA(FEET) =   810.00   CHANNEL SLOPE =  0.1111
  CHANNEL BASE(FEET) =    3.00   "Z" FACTOR =   2.000
```

```
  MANNING'S FACTOR = 0.030   MAXIMUM DEPTH(FEET) =  10.00
   100 YEAR RAINFALL INTENSITY(INCH/HOUR) =  5.590
  *USER SPECIFIED(SUBAREA):
  USER-SPECIFIED RUNOFF COEFFICIENT = .3500
  S.C.S. CURVE NUMBER (AMC II) =   0
  TRAVEL TIME COMPUTED USING ESTIMATED FLOW(CFS) =      93.85
  TRAVEL TIME THRU SUBAREA BASED ON VELOCITY(FEET/SEC.) =  14.08
  AVERAGE FLOW DEPTH(FEET) =   1.22   TRAVEL TIME(MIN.) =   0.96
  Tc(MIN.) =    9.46
  SUBAREA AREA(ACRES) =     7.25       SUBAREA RUNOFF(CFS) =   14.18
  AREA-AVERAGE RUNOFF COEFFICIENT =  0.350
  TOTAL AREA(ACRES) =       48.6         PEAK FLOW RATE(CFS) =      95.16

  END OF SUBAREA CHANNEL FLOW HYDRAULICS:
  DEPTH(FEET) =  1.23   FLOW VELOCITY(FEET/SEC.) =  14.12
  LONGEST FLOWPATH FROM NODE    300.00 TO NODE    303.00 =    2660.00 FEET.

****************************************************************************
  FLOW PROCESS FROM NODE    303.00 TO NODE    303.00 IS CODE =   1
----------------------------------------------------------------------------
  >>>>>DESIGNATE INDEPENDENT STREAM FOR CONFLUENCE<<<<<
============================================================================
  TOTAL NUMBER OF STREAMS =  2
  CONFLUENCE VALUES USED FOR INDEPENDENT STREAM  1 ARE:
  TIME OF CONCENTRATION(MIN.) =    9.46
  RAINFALL INTENSITY(INCH/HR) =   5.59
  TOTAL STREAM AREA(ACRES) =    48.64
  PEAK FLOW RATE(CFS) AT CONFLUENCE =     95.16

****************************************************************************
  FLOW PROCESS FROM NODE    305.50 TO NODE    306.50 IS CODE =  21
----------------------------------------------------------------------------
  >>>>>RATIONAL METHOD INITIAL SUBAREA ANALYSIS<<<<<
============================================================================
  *USER SPECIFIED(SUBAREA):
  USER-SPECIFIED RUNOFF COEFFICIENT = .3500
  S.C.S. CURVE NUMBER (AMC II) =   0
  INITIAL SUBAREA FLOW-LENGTH(FEET) =    70.00
  UPSTREAM ELEVATION(FEET) =    978.00
  DOWNSTREAM ELEVATION(FEET) =    958.00
  ELEVATION DIFFERENCE(FEET) =     20.00
  SUBAREA OVERLAND TIME OF FLOW(MIN.) =    5.243
  WARNING: THE MAXIMUM OVERLAND FLOW SLOPE, 10.%, IS USED IN Tc CALCULATION!
   100 YEAR RAINFALL INTENSITY(INCH/HOUR) =  8.177
  SUBAREA RUNOFF(CFS) =      0.63
  TOTAL AREA(ACRES) =      0.22   TOTAL RUNOFF(CFS) =      0.63

****************************************************************************
  FLOW PROCESS FROM NODE    306.50 TO NODE    307.50 IS CODE =  51
----------------------------------------------------------------------------
  >>>>>COMPUTE TRAPEZOIDAL CHANNEL FLOW<<<<<
  >>>>>TRAVELTIME THRU SUBAREA (EXISTING ELEMENT)<<<<<
============================================================================
  ELEVATION DATA: UPSTREAM(FEET) =    958.00  DOWNSTREAM(FEET) =    810.00
  CHANNEL LENGTH THRU SUBAREA(FEET) =   450.00   CHANNEL SLOPE =  0.3289
  CHANNEL BASE(FEET) =    3.00   "Z" FACTOR =   2.000
  MANNING'S FACTOR = 0.030   MAXIMUM DEPTH(FEET) =  10.00
   100 YEAR RAINFALL INTENSITY(INCH/HOUR) =  7.402
  *USER SPECIFIED(SUBAREA):
  USER-SPECIFIED RUNOFF COEFFICIENT = .3500
  S.C.S. CURVE NUMBER (AMC II) =   0
  TRAVEL TIME COMPUTED USING ESTIMATED FLOW(CFS) =       5.37
  TRAVEL TIME THRU SUBAREA BASED ON VELOCITY(FEET/SEC.) =   8.56
```

```
  AVERAGE FLOW DEPTH(FEET) =   0.19   TRAVEL TIME(MIN.) =   0.88
  Tc(MIN.) =    6.12
  SUBAREA AREA(ACRES) =     3.65       SUBAREA RUNOFF(CFS) =    9.46
  AREA-AVERAGE RUNOFF COEFFICIENT =  0.350
  TOTAL AREA(ACRES) =        3.9         PEAK FLOW RATE(CFS) =      10.03

  END OF SUBAREA CHANNEL FLOW HYDRAULICS:
  DEPTH(FEET) =  0.27   FLOW VELOCITY(FEET/SEC.) =  10.49
  LONGEST FLOWPATH FROM NODE    305.50 TO NODE    307.50 =     520.00 FEET.

****************************************************************************
  FLOW PROCESS FROM NODE    307.50 TO NODE    308.50 IS CODE =  31
----------------------------------------------------------------------------
  >>>>>COMPUTE PIPE-FLOW TRAVEL TIME THRU SUBAREA<<<<<
  >>>>>USING COMPUTER-ESTIMATED PIPESIZE (NON-PRESSURE FLOW)<<<<<
============================================================================
  ELEVATION DATA: UPSTREAM(FEET) =   804.00  DOWNSTREAM(FEET) =   788.00
  FLOW LENGTH(FEET) =   450.00   MANNING'S N =  0.013
  ESTIMATED PIPE DIAMETER(INCH) INCREASED TO 18.000
  DEPTH OF FLOW IN  18.0 INCH PIPE IS   9.4 INCHES
  PIPE-FLOW VELOCITY(FEET/SEC.) =  10.81
  ESTIMATED PIPE DIAMETER(INCH) =  18.00    NUMBER OF PIPES =   1
  PIPE-FLOW(CFS) =      10.03
  PIPE TRAVEL TIME(MIN.) =   0.69    Tc(MIN.) =    6.81
  LONGEST FLOWPATH FROM NODE    305.50 TO NODE    308.50 =     970.00 FEET.

****************************************************************************
  FLOW PROCESS FROM NODE    308.50 TO NODE    303.00 IS CODE =  31
----------------------------------------------------------------------------
  >>>>>COMPUTE PIPE-FLOW TRAVEL TIME THRU SUBAREA<<<<<
  >>>>>USING COMPUTER-ESTIMATED PIPESIZE (NON-PRESSURE FLOW)<<<<<
============================================================================
  ELEVATION DATA: UPSTREAM(FEET) =   788.00  DOWNSTREAM(FEET) =   764.00
  FLOW LENGTH(FEET) =   460.00   MANNING'S N =  0.013
  ESTIMATED PIPE DIAMETER(INCH) INCREASED TO 18.000
  DEPTH OF FLOW IN  18.0 INCH PIPE IS   8.4 INCHES
  PIPE-FLOW VELOCITY(FEET/SEC.) =  12.47
  ESTIMATED PIPE DIAMETER(INCH) =  18.00    NUMBER OF PIPES =   1
  PIPE-FLOW(CFS) =      10.03
  PIPE TRAVEL TIME(MIN.) =   0.61    Tc(MIN.) =    7.43
  LONGEST FLOWPATH FROM NODE    305.50 TO NODE    303.00 =    1430.00 FEET.

****************************************************************************
  FLOW PROCESS FROM NODE    303.00 TO NODE    303.00 IS CODE =   1
----------------------------------------------------------------------------
  >>>>>DESIGNATE INDEPENDENT STREAM FOR CONFLUENCE<<<<<
  >>>>>AND COMPUTE VARIOUS CONFLUENCED STREAM VALUES<<<<<
============================================================================
  TOTAL NUMBER OF STREAMS =  2
  CONFLUENCE VALUES USED FOR INDEPENDENT STREAM  2 ARE:
  TIME OF CONCENTRATION(MIN.) =    7.43
  RAINFALL INTENSITY(INCH/HR) =   6.53
  TOTAL STREAM AREA(ACRES) =     3.87
  PEAK FLOW RATE(CFS) AT CONFLUENCE =     10.03

  ** CONFLUENCE DATA **
  STREAM     RUNOFF       Tc      INTENSITY      AREA
  NUMBER      (CFS)     (MIN.)   (INCH/HOUR)    (ACRE)
      1       95.16     9.46        5.590         48.64
      2       10.03     7.43        6.532          3.87

  RAINFALL INTENSITY AND TIME OF CONCENTRATION RATIO
  CONFLUENCE FORMULA USED FOR  2 STREAMS.
```

```
  ** PEAK FLOW RATE TABLE **
  STREAM     RUNOFF      Tc      INTENSITY
  NUMBER      (CFS)    (MIN.)   (INCH/HOUR)
      1       91.45     7.43       6.532
      2      103.74     9.46       5.590

  COMPUTED CONFLUENCE ESTIMATES ARE AS FOLLOWS:
  PEAK FLOW RATE(CFS) =     103.74   Tc(MIN.) =    9.46
  TOTAL AREA(ACRES) =       52.5
  LONGEST FLOWPATH FROM NODE    300.00 TO NODE    303.00 =    2660.00 FEET.

****************************************************************************
  FLOW PROCESS FROM NODE    303.00 TO NODE    305.00 IS CODE =  51
----------------------------------------------------------------------------
  >>>>>COMPUTE TRAPEZOIDAL CHANNEL FLOW<<<<<
  >>>>>TRAVELTIME THRU SUBAREA (EXISTING ELEMENT)<<<<<
============================================================================
  ELEVATION DATA: UPSTREAM(FEET) =    764.00  DOWNSTREAM(FEET) =    742.00
  CHANNEL LENGTH THRU SUBAREA(FEET) =   300.00   CHANNEL SLOPE =  0.0733
  CHANNEL BASE(FEET) =    3.00   "Z" FACTOR =   2.000
  MANNING'S FACTOR = 0.030   MAXIMUM DEPTH(FEET) =  10.00
   100 YEAR RAINFALL INTENSITY(INCH/HOUR) =  5.442
  *USER SPECIFIED(SUBAREA):
  USER-SPECIFIED RUNOFF COEFFICIENT = .3500
  S.C.S. CURVE NUMBER (AMC II) =   0
  TRAVEL TIME COMPUTED USING ESTIMATED FLOW(CFS) =     105.58
  TRAVEL TIME THRU SUBAREA BASED ON VELOCITY(FEET/SEC.) =  12.48
  AVERAGE FLOW DEPTH(FEET) =   1.44   TRAVEL TIME(MIN.) =   0.40
  Tc(MIN.) =    9.86
  SUBAREA AREA(ACRES) =     1.94       SUBAREA RUNOFF(CFS) =    3.70
  AREA-AVERAGE RUNOFF COEFFICIENT =  0.350
  TOTAL AREA(ACRES) =       54.4         PEAK FLOW RATE(CFS) =     103.74

  END OF SUBAREA CHANNEL FLOW HYDRAULICS:
  DEPTH(FEET) =  1.43   FLOW VELOCITY(FEET/SEC.) =  12.38
  LONGEST FLOWPATH FROM NODE    300.00 TO NODE    305.00 =    2960.00 FEET.

****************************************************************************
  FLOW PROCESS FROM NODE    305.00 TO NODE    305.00 IS CODE =  10
----------------------------------------------------------------------------
  >>>>>MAIN-STREAM MEMORY COPIED ONTO MEMORY BANK # 1 <<<<<
============================================================================

****************************************************************************
  FLOW PROCESS FROM NODE    300.00 TO NODE    310.00 IS CODE =  21
----------------------------------------------------------------------------
  >>>>>RATIONAL METHOD INITIAL SUBAREA ANALYSIS<<<<<
============================================================================
  *USER SPECIFIED(SUBAREA):
  USER-SPECIFIED RUNOFF COEFFICIENT = .3500
  S.C.S. CURVE NUMBER (AMC II) =   0
  INITIAL SUBAREA FLOW-LENGTH(FEET) =    70.00
  UPSTREAM ELEVATION(FEET) =   1205.00
  DOWNSTREAM ELEVATION(FEET) =   1200.00
  ELEVATION DIFFERENCE(FEET) =      5.00
  SUBAREA OVERLAND TIME OF FLOW(MIN.) =    5.865
   100 YEAR RAINFALL INTENSITY(INCH/HOUR) =  7.606
  SUBAREA RUNOFF(CFS) =      0.29
  TOTAL AREA(ACRES) =      0.11   TOTAL RUNOFF(CFS) =      0.29

****************************************************************************
  FLOW PROCESS FROM NODE    310.00 TO NODE    311.00 IS CODE =  51
```

```
----------------------------------------------------------------------------
  >>>>>COMPUTE TRAPEZOIDAL CHANNEL FLOW<<<<<
  >>>>>TRAVELTIME THRU SUBAREA (EXISTING ELEMENT)<<<<<
============================================================================
  ELEVATION DATA: UPSTREAM(FEET) =   1200.00  DOWNSTREAM(FEET) =   1100.00
  CHANNEL LENGTH THRU SUBAREA(FEET) =   800.00   CHANNEL SLOPE =  0.1250
  CHANNEL BASE(FEET) =    3.00   "Z" FACTOR =   2.000
  MANNING'S FACTOR = 0.030   MAXIMUM DEPTH(FEET) =  10.00
   100 YEAR RAINFALL INTENSITY(INCH/HOUR) =  6.285
  *USER SPECIFIED(SUBAREA):
  USER-SPECIFIED RUNOFF COEFFICIENT = .3500
  S.C.S. CURVE NUMBER (AMC II) =   0
  TRAVEL TIME COMPUTED USING ESTIMATED FLOW(CFS) =       6.36
  TRAVEL TIME THRU SUBAREA BASED ON VELOCITY(FEET/SEC.) =   6.60
  AVERAGE FLOW DEPTH(FEET) =   0.27   TRAVEL TIME(MIN.) =   2.02
  Tc(MIN.) =    7.88
  SUBAREA AREA(ACRES) =     5.47       SUBAREA RUNOFF(CFS) =   12.03
  AREA-AVERAGE RUNOFF COEFFICIENT =  0.350
  TOTAL AREA(ACRES) =        5.6         PEAK FLOW RATE(CFS) =      12.27

  END OF SUBAREA CHANNEL FLOW HYDRAULICS:
  DEPTH(FEET) =  0.40   FLOW VELOCITY(FEET/SEC.) =   8.09
  LONGEST FLOWPATH FROM NODE    300.00 TO NODE    311.00 =     870.00 FEET.

****************************************************************************
  FLOW PROCESS FROM NODE    311.00 TO NODE    312.00 IS CODE =  51
----------------------------------------------------------------------------
  >>>>>COMPUTE TRAPEZOIDAL CHANNEL FLOW<<<<<
  >>>>>TRAVELTIME THRU SUBAREA (EXISTING ELEMENT)<<<<<
============================================================================
  ELEVATION DATA: UPSTREAM(FEET) =   1100.00  DOWNSTREAM(FEET) =    858.00
  CHANNEL LENGTH THRU SUBAREA(FEET) =  1050.00   CHANNEL SLOPE =  0.2305
  CHANNEL BASE(FEET) =    3.00   "Z" FACTOR =   2.000
  MANNING'S FACTOR = 0.030   MAXIMUM DEPTH(FEET) =  10.00
   100 YEAR RAINFALL INTENSITY(INCH/HOUR) =  5.622
  *USER SPECIFIED(SUBAREA):
  USER-SPECIFIED RUNOFF COEFFICIENT = .3500
  S.C.S. CURVE NUMBER (AMC II) =   0
  TRAVEL TIME COMPUTED USING ESTIMATED FLOW(CFS) =      20.39
  TRAVEL TIME THRU SUBAREA BASED ON VELOCITY(FEET/SEC.) =  11.77
  AVERAGE FLOW DEPTH(FEET) =   0.45   TRAVEL TIME(MIN.) =   1.49
  Tc(MIN.) =    9.37
  SUBAREA AREA(ACRES) =     8.23       SUBAREA RUNOFF(CFS) =   16.19
  AREA-AVERAGE RUNOFF COEFFICIENT =  0.350
  TOTAL AREA(ACRES) =       13.8         PEAK FLOW RATE(CFS) =      27.17

  END OF SUBAREA CHANNEL FLOW HYDRAULICS:
  DEPTH(FEET) =  0.52   FLOW VELOCITY(FEET/SEC.) =  12.82
  LONGEST FLOWPATH FROM NODE    300.00 TO NODE    312.00 =    1920.00 FEET.

****************************************************************************
  FLOW PROCESS FROM NODE    312.00 TO NODE    313.00 IS CODE =  91
----------------------------------------------------------------------------
  >>>>>COMPUTE "V" GUTTER FLOW TRAVEL TIME THRU SUBAREA<<<<<
============================================================================
  UPSTREAM NODE ELEVATION(FEET) =    858.00
  DOWNSTREAM NODE ELEVATION(FEET) =    832.00
  CHANNEL LENGTH THRU SUBAREA(FEET) =   310.00
  "V" GUTTER WIDTH(FEET) =   4.00   GUTTER HIKE(FEET) =  0.800
  PAVEMENT LIP(FEET) =  0.010   MANNING'S N = .0130
  PAVEMENT CROSSFALL(DECIMAL NOTATION) = 0.20000
  MAXIMUM DEPTH(FEET) =   1.50
   100 YEAR RAINFALL INTENSITY(INCH/HOUR) =  5.510
```

```
  *USER SPECIFIED(SUBAREA):
  USER-SPECIFIED RUNOFF COEFFICIENT = .3500
  S.C.S. CURVE NUMBER (AMC II) =   0
  TRAVEL TIME COMPUTED USING ESTIMATED FLOW(CFS) =     28.49
  TRAVEL TIME THRU SUBAREA BASED ON VELOCITY(FEET/SEC.) =  17.35
  AVERAGE FLOW DEPTH(FEET) =   0.81   FLOOD WIDTH(FEET) =    4.01
  "V" GUTTER FLOW TRAVEL TIME(MIN.) =   0.30   Tc(MIN.) =    9.67
  SUBAREA AREA(ACRES) =    1.37       SUBAREA RUNOFF(CFS) =    2.64
  AREA-AVERAGE RUNOFF COEFFICIENT =  0.350
  TOTAL AREA(ACRES) =       15.2         PEAK FLOW RATE(CFS) =      29.27

  END OF SUBAREA "V" GUTTER HYDRAULICS:
  DEPTH(FEET) =  0.82   FLOOD WIDTH(FEET) =    4.07
  FLOW VELOCITY(FEET/SEC.) =  17.53   DEPTH*VELOCITY(FT*FT/SEC) =  14.33
  LONGEST FLOWPATH FROM NODE    300.00 TO NODE    313.00 =    2230.00 FEET.

****************************************************************************
  FLOW PROCESS FROM NODE    313.00 TO NODE    313.00 IS CODE =   1
----------------------------------------------------------------------------
  >>>>>DESIGNATE INDEPENDENT STREAM FOR CONFLUENCE<<<<<
============================================================================
  TOTAL NUMBER OF STREAMS =  2
  CONFLUENCE VALUES USED FOR INDEPENDENT STREAM  1 ARE:
  TIME OF CONCENTRATION(MIN.) =    9.67
  RAINFALL INTENSITY(INCH/HR) =   5.51
  TOTAL STREAM AREA(ACRES) =    15.18
  PEAK FLOW RATE(CFS) AT CONFLUENCE =     29.27

****************************************************************************
  FLOW PROCESS FROM NODE    314.00 TO NODE    315.00 IS CODE =  21
----------------------------------------------------------------------------
  >>>>>RATIONAL METHOD INITIAL SUBAREA ANALYSIS<<<<<
============================================================================
  *USER SPECIFIED(SUBAREA):
  USER-SPECIFIED RUNOFF COEFFICIENT = .3500
  S.C.S. CURVE NUMBER (AMC II) =   0
  INITIAL SUBAREA FLOW-LENGTH(FEET) =    70.00
  UPSTREAM ELEVATION(FEET) =    896.00
  DOWNSTREAM ELEVATION(FEET) =    872.00
  ELEVATION DIFFERENCE(FEET) =     24.00
  SUBAREA OVERLAND TIME OF FLOW(MIN.) =    5.243
  WARNING: THE MAXIMUM OVERLAND FLOW SLOPE, 10.%, IS USED IN Tc CALCULATION!
   100 YEAR RAINFALL INTENSITY(INCH/HOUR) =  8.177
  SUBAREA RUNOFF(CFS) =      0.46
  TOTAL AREA(ACRES) =      0.16   TOTAL RUNOFF(CFS) =      0.46

****************************************************************************
  FLOW PROCESS FROM NODE    315.00 TO NODE    313.00 IS CODE =  31
----------------------------------------------------------------------------
  >>>>>COMPUTE PIPE-FLOW TRAVEL TIME THRU SUBAREA<<<<<
  >>>>>USING COMPUTER-ESTIMATED PIPESIZE (NON-PRESSURE FLOW)<<<<<
============================================================================
  ELEVATION DATA: UPSTREAM(FEET) =   868.00  DOWNSTREAM(FEET) =   832.00
  FLOW LENGTH(FEET) =    85.00   MANNING'S N =  0.013
  ESTIMATED PIPE DIAMETER(INCH) INCREASED TO 18.000
  DEPTH OF FLOW IN  18.0 INCH PIPE IS   1.1 INCHES
  PIPE-FLOW VELOCITY(FEET/SEC.) =  10.55
  ESTIMATED PIPE DIAMETER(INCH) =  18.00    NUMBER OF PIPES =   1
  PIPE-FLOW(CFS) =       0.46
  PIPE TRAVEL TIME(MIN.) =   0.13    Tc(MIN.) =    5.38
  LONGEST FLOWPATH FROM NODE    314.00 TO NODE    313.00 =     155.00 FEET.

****************************************************************************
```

```
  FLOW PROCESS FROM NODE    313.00 TO NODE    313.00 IS CODE =   1
----------------------------------------------------------------------------
  >>>>>DESIGNATE INDEPENDENT STREAM FOR CONFLUENCE<<<<<
  >>>>>AND COMPUTE VARIOUS CONFLUENCED STREAM VALUES<<<<<
============================================================================
  TOTAL NUMBER OF STREAMS =  2
  CONFLUENCE VALUES USED FOR INDEPENDENT STREAM  2 ARE:
  TIME OF CONCENTRATION(MIN.) =    5.38
  RAINFALL INTENSITY(INCH/HR) =   8.04
  TOTAL STREAM AREA(ACRES) =     0.16
  PEAK FLOW RATE(CFS) AT CONFLUENCE =      0.46

  ** CONFLUENCE DATA **
  STREAM     RUNOFF       Tc      INTENSITY      AREA
  NUMBER      (CFS)     (MIN.)   (INCH/HOUR)    (ACRE)
      1       29.27     9.67        5.510         15.18
      2        0.46     5.38        8.045          0.16

  RAINFALL INTENSITY AND TIME OF CONCENTRATION RATIO
  CONFLUENCE FORMULA USED FOR  2 STREAMS.

  ** PEAK FLOW RATE TABLE **
  STREAM     RUNOFF      Tc      INTENSITY
  NUMBER      (CFS)    (MIN.)   (INCH/HOUR)
      1       16.74     5.38       8.045
      2       29.59     9.67       5.510

  COMPUTED CONFLUENCE ESTIMATES ARE AS FOLLOWS:
  PEAK FLOW RATE(CFS) =      29.59   Tc(MIN.) =    9.67
  TOTAL AREA(ACRES) =       15.3
  LONGEST FLOWPATH FROM NODE    300.00 TO NODE    313.00 =    2230.00 FEET.

****************************************************************************
  FLOW PROCESS FROM NODE    313.00 TO NODE    317.00 IS CODE =  31
----------------------------------------------------------------------------
  >>>>>COMPUTE PIPE-FLOW TRAVEL TIME THRU SUBAREA<<<<<
  >>>>>USING COMPUTER-ESTIMATED PIPESIZE (NON-PRESSURE FLOW)<<<<<
============================================================================
  ELEVATION DATA: UPSTREAM(FEET) =   832.00  DOWNSTREAM(FEET) =   820.00
  FLOW LENGTH(FEET) =     0.02   MANNING'S N =  0.013
  ESTIMATED PIPE DIAMETER(INCH) INCREASED TO 18.000
  DEPTH OF FLOW IN  18.0 INCH PIPE IS   1.4 INCHES
  PIPE-FLOW VELOCITY(FEET/SEC.) = 470.14
  ESTIMATED PIPE DIAMETER(INCH) =  18.00    NUMBER OF PIPES =   1
  PIPE-FLOW(CFS) =      29.59
  PIPE TRAVEL TIME(MIN.) =   0.00    Tc(MIN.) =    9.67
  LONGEST FLOWPATH FROM NODE    300.00 TO NODE    317.00 =    2230.02 FEET.

****************************************************************************
  FLOW PROCESS FROM NODE    317.00 TO NODE    317.00 IS CODE =   1
----------------------------------------------------------------------------
  >>>>>DESIGNATE INDEPENDENT STREAM FOR CONFLUENCE<<<<<
============================================================================
  TOTAL NUMBER OF STREAMS =  3
  CONFLUENCE VALUES USED FOR INDEPENDENT STREAM  1 ARE:
  TIME OF CONCENTRATION(MIN.) =    9.67
  RAINFALL INTENSITY(INCH/HR) =   5.51
  TOTAL STREAM AREA(ACRES) =    15.34
  PEAK FLOW RATE(CFS) AT CONFLUENCE =     29.59

****************************************************************************
  FLOW PROCESS FROM NODE    318.00 TO NODE    319.00 IS CODE =  21
----------------------------------------------------------------------------
```

```
  >>>>>RATIONAL METHOD INITIAL SUBAREA ANALYSIS<<<<<
==============================================================================
  *USER SPECIFIED(SUBAREA):
  USER-SPECIFIED RUNOFF COEFFICIENT = .3500
  S.C.S. CURVE NUMBER (AMC II) =   0
  INITIAL SUBAREA FLOW-LENGTH(FEET) =    70.00
  UPSTREAM ELEVATION(FEET) =    952.00
  DOWNSTREAM ELEVATION(FEET) =    938.00
  ELEVATION DIFFERENCE(FEET) =     14.00
  SUBAREA OVERLAND TIME OF FLOW(MIN.) =    5.243
  WARNING: THE MAXIMUM OVERLAND FLOW SLOPE, 10.%, IS USED IN Tc CALCULATION!
   100 YEAR RAINFALL INTENSITY(INCH/HOUR) =  8.177
  SUBAREA RUNOFF(CFS) =      0.29
  TOTAL AREA(ACRES) =      0.10   TOTAL RUNOFF(CFS) =      0.29

******************************************************************************
  FLOW PROCESS FROM NODE    319.00 TO NODE    317.00 IS CODE =  51
------------------------------------------------------------------------------
  >>>>>COMPUTE TRAPEZOIDAL CHANNEL FLOW<<<<<
  >>>>>TRAVELTIME THRU SUBAREA (EXISTING ELEMENT)<<<<<
==============================================================================
  ELEVATION DATA: UPSTREAM(FEET) =    938.00  DOWNSTREAM(FEET) =    820.00
  CHANNEL LENGTH THRU SUBAREA(FEET) =   640.00   CHANNEL SLOPE =  0.1844
  CHANNEL BASE(FEET) =    3.00   "Z" FACTOR =   2.000
  MANNING'S FACTOR = 0.030   MAXIMUM DEPTH(FEET) =  10.00
   100 YEAR RAINFALL INTENSITY(INCH/HOUR) =  6.943
  *USER SPECIFIED(SUBAREA):
  USER-SPECIFIED RUNOFF COEFFICIENT = .3500
  S.C.S. CURVE NUMBER (AMC II) =   0
  TRAVEL TIME COMPUTED USING ESTIMATED FLOW(CFS) =       5.29
  TRAVEL TIME THRU SUBAREA BASED ON VELOCITY(FEET/SEC.) =   7.04
  AVERAGE FLOW DEPTH(FEET) =   0.22   TRAVEL TIME(MIN.) =   1.51
  Tc(MIN.) =    6.76
  SUBAREA AREA(ACRES) =     4.09       SUBAREA RUNOFF(CFS) =    9.94
  AREA-AVERAGE RUNOFF COEFFICIENT =  0.350
  TOTAL AREA(ACRES) =        4.2         PEAK FLOW RATE(CFS) =      10.18

  END OF SUBAREA CHANNEL FLOW HYDRAULICS:
  DEPTH(FEET) =  0.32   FLOW VELOCITY(FEET/SEC.) =   8.82
  LONGEST FLOWPATH FROM NODE    318.00 TO NODE    317.00 =     710.00 FEET.

******************************************************************************
  FLOW PROCESS FROM NODE    317.00 TO NODE    317.00 IS CODE =   1
------------------------------------------------------------------------------
  >>>>>DESIGNATE INDEPENDENT STREAM FOR CONFLUENCE<<<<<
==============================================================================
  TOTAL NUMBER OF STREAMS =  3
  CONFLUENCE VALUES USED FOR INDEPENDENT STREAM  2 ARE:
  TIME OF CONCENTRATION(MIN.) =    6.76
  RAINFALL INTENSITY(INCH/HR) =   6.94
  TOTAL STREAM AREA(ACRES) =     4.19
  PEAK FLOW RATE(CFS) AT CONFLUENCE =     10.18

******************************************************************************
  FLOW PROCESS FROM NODE    300.00 TO NODE    320.00 IS CODE =  21
------------------------------------------------------------------------------
  >>>>>RATIONAL METHOD INITIAL SUBAREA ANALYSIS<<<<<
==============================================================================
  *USER SPECIFIED(SUBAREA):
  USER-SPECIFIED RUNOFF COEFFICIENT = .3500
  S.C.S. CURVE NUMBER (AMC II) =   0
  INITIAL SUBAREA FLOW-LENGTH(FEET) =    70.00
  UPSTREAM ELEVATION(FEET) =   1205.00
```

```
  DOWNSTREAM ELEVATION(FEET) =   1200.00
  ELEVATION DIFFERENCE(FEET) =      5.00
  SUBAREA OVERLAND TIME OF FLOW(MIN.) =    5.865
   100 YEAR RAINFALL INTENSITY(INCH/HOUR) =  7.606
  SUBAREA RUNOFF(CFS) =      0.27
  TOTAL AREA(ACRES) =      0.10   TOTAL RUNOFF(CFS) =      0.27

****************************************************************************
  FLOW PROCESS FROM NODE    320.00 TO NODE    321.00 IS CODE =  51
----------------------------------------------------------------------------
  >>>>>COMPUTE TRAPEZOIDAL CHANNEL FLOW<<<<<
  >>>>>TRAVELTIME THRU SUBAREA (EXISTING ELEMENT)<<<<<
============================================================================
  ELEVATION DATA: UPSTREAM(FEET) =   1200.00  DOWNSTREAM(FEET) =   1075.00
  CHANNEL LENGTH THRU SUBAREA(FEET) =   815.00   CHANNEL SLOPE =  0.1534
  CHANNEL BASE(FEET) =    3.00   "Z" FACTOR =   2.000
  MANNING'S FACTOR = 0.030   MAXIMUM DEPTH(FEET) =  10.00
   100 YEAR RAINFALL INTENSITY(INCH/HOUR) =  6.401
  *USER SPECIFIED(SUBAREA):
  USER-SPECIFIED RUNOFF COEFFICIENT = .3500
  S.C.S. CURVE NUMBER (AMC II) =   0
  TRAVEL TIME COMPUTED USING ESTIMATED FLOW(CFS) =       8.17
  TRAVEL TIME THRU SUBAREA BASED ON VELOCITY(FEET/SEC.) =   7.55
  AVERAGE FLOW DEPTH(FEET) =   0.30   TRAVEL TIME(MIN.) =   1.80
  Tc(MIN.) =    7.66
  SUBAREA AREA(ACRES) =     6.99       SUBAREA RUNOFF(CFS) =   15.66
  AREA-AVERAGE RUNOFF COEFFICIENT =  0.350
  TOTAL AREA(ACRES) =        7.1         PEAK FLOW RATE(CFS) =      15.89

  END OF SUBAREA CHANNEL FLOW HYDRAULICS:
  DEPTH(FEET) =  0.43   FLOW VELOCITY(FEET/SEC.) =   9.52
  LONGEST FLOWPATH FROM NODE    300.00 TO NODE    321.00 =     885.00 FEET.

****************************************************************************
  FLOW PROCESS FROM NODE    321.00 TO NODE    322.00 IS CODE =  51
----------------------------------------------------------------------------
  >>>>>COMPUTE TRAPEZOIDAL CHANNEL FLOW<<<<<
  >>>>>TRAVELTIME THRU SUBAREA (EXISTING ELEMENT)<<<<<
============================================================================
  ELEVATION DATA: UPSTREAM(FEET) =   1075.00  DOWNSTREAM(FEET) =    935.00
  CHANNEL LENGTH THRU SUBAREA(FEET) =   620.00   CHANNEL SLOPE =  0.2258
  CHANNEL BASE(FEET) =    3.00   "Z" FACTOR =   2.000
  MANNING'S FACTOR = 0.030   MAXIMUM DEPTH(FEET) =  10.00
   100 YEAR RAINFALL INTENSITY(INCH/HOUR) =  6.009
  *USER SPECIFIED(SUBAREA):
  USER-SPECIFIED RUNOFF COEFFICIENT = .3500
  S.C.S. CURVE NUMBER (AMC II) =   0
  TRAVEL TIME COMPUTED USING ESTIMATED FLOW(CFS) =      29.30
  TRAVEL TIME THRU SUBAREA BASED ON VELOCITY(FEET/SEC.) =  13.10
  AVERAGE FLOW DEPTH(FEET) =   0.55   TRAVEL TIME(MIN.) =   0.79
  Tc(MIN.) =    8.45
  SUBAREA AREA(ACRES) =    12.76       SUBAREA RUNOFF(CFS) =   26.84
  AREA-AVERAGE RUNOFF COEFFICIENT =  0.350
  TOTAL AREA(ACRES) =       19.9         PEAK FLOW RATE(CFS) =      41.75

  END OF SUBAREA CHANNEL FLOW HYDRAULICS:
  DEPTH(FEET) =  0.67   FLOW VELOCITY(FEET/SEC.) =  14.45
  LONGEST FLOWPATH FROM NODE    300.00 TO NODE    322.00 =    1505.00 FEET.

****************************************************************************
  FLOW PROCESS FROM NODE    322.00 TO NODE    317.00 IS CODE =  51
----------------------------------------------------------------------------
  >>>>>COMPUTE TRAPEZOIDAL CHANNEL FLOW<<<<<
```

```
  >>>>>TRAVELTIME THRU SUBAREA (EXISTING ELEMENT)<<<<<
==============================================================================
  ELEVATION DATA: UPSTREAM(FEET) =    935.00  DOWNSTREAM(FEET) =    820.00
  CHANNEL LENGTH THRU SUBAREA(FEET) =   790.00   CHANNEL SLOPE =  0.1456
  CHANNEL BASE(FEET) =    3.00   "Z" FACTOR =   2.000
  MANNING'S FACTOR = 0.030   MAXIMUM DEPTH(FEET) =  10.00
   100 YEAR RAINFALL INTENSITY(INCH/HOUR) =  5.578
  *USER SPECIFIED(SUBAREA):
  USER-SPECIFIED RUNOFF COEFFICIENT = .3500
  S.C.S. CURVE NUMBER (AMC II) =   0
  TRAVEL TIME COMPUTED USING ESTIMATED FLOW(CFS) =      46.57
  TRAVEL TIME THRU SUBAREA BASED ON VELOCITY(FEET/SEC.) =  12.73
  AVERAGE FLOW DEPTH(FEET) =   0.80   TRAVEL TIME(MIN.) =   1.03
  Tc(MIN.) =    9.49
  SUBAREA AREA(ACRES) =     4.93       SUBAREA RUNOFF(CFS) =    9.63
  AREA-AVERAGE RUNOFF COEFFICIENT =  0.350
  TOTAL AREA(ACRES) =       24.8         PEAK FLOW RATE(CFS) =      48.38

  END OF SUBAREA CHANNEL FLOW HYDRAULICS:
  DEPTH(FEET) =  0.81   FLOW VELOCITY(FEET/SEC.) =  12.89
  LONGEST FLOWPATH FROM NODE    300.00 TO NODE    317.00 =    2295.00 FEET.

****************************************************************************
  FLOW PROCESS FROM NODE    317.00 TO NODE    317.00 IS CODE =   1
----------------------------------------------------------------------------
  >>>>>DESIGNATE INDEPENDENT STREAM FOR CONFLUENCE<<<<<
  >>>>>AND COMPUTE VARIOUS CONFLUENCED STREAM VALUES<<<<<
==============================================================================
  TOTAL NUMBER OF STREAMS =  3
  CONFLUENCE VALUES USED FOR INDEPENDENT STREAM  3 ARE:
  TIME OF CONCENTRATION(MIN.) =    9.49
  RAINFALL INTENSITY(INCH/HR) =   5.58
  TOTAL STREAM AREA(ACRES) =    24.78
  PEAK FLOW RATE(CFS) AT CONFLUENCE =     48.38

  ** CONFLUENCE DATA **
  STREAM     RUNOFF       Tc      INTENSITY      AREA
  NUMBER      (CFS)     (MIN.)   (INCH/HOUR)    (ACRE)
      1       29.59     9.67        5.510         15.34
      2       10.18     6.76        6.943          4.19
      3       48.38     9.49        5.578         24.78

  RAINFALL INTENSITY AND TIME OF CONCENTRATION RATIO
  CONFLUENCE FORMULA USED FOR  3 STREAMS.

  ** PEAK FLOW RATE TABLE **
  STREAM     RUNOFF      Tc      INTENSITY
  NUMBER      (CFS)    (MIN.)   (INCH/HOUR)
      1       68.12     6.76       6.943
      2       85.78     9.49       5.578
      3       85.45     9.67       5.510

  COMPUTED CONFLUENCE ESTIMATES ARE AS FOLLOWS:
  PEAK FLOW RATE(CFS) =      85.78   Tc(MIN.) =    9.49
  TOTAL AREA(ACRES) =       44.3
  LONGEST FLOWPATH FROM NODE    300.00 TO NODE    317.00 =    2295.00 FEET.

****************************************************************************
  FLOW PROCESS FROM NODE    317.00 TO NODE    323.00 IS CODE =  91
----------------------------------------------------------------------------
  >>>>>COMPUTE "V" GUTTER FLOW TRAVEL TIME THRU SUBAREA<<<<<
==============================================================================
  UPSTREAM NODE ELEVATION(FEET) =    820.00
```

```
  DOWNSTREAM NODE ELEVATION(FEET) =    770.00
  CHANNEL LENGTH THRU SUBAREA(FEET) =   440.00
  "V" GUTTER WIDTH(FEET) =   4.00   GUTTER HIKE(FEET) =  0.800
  PAVEMENT LIP(FEET) =  0.010   MANNING'S N = .0130
  PAVEMENT CROSSFALL(DECIMAL NOTATION) = 0.20000
  MAXIMUM DEPTH(FEET) =   1.50
   100 YEAR RAINFALL INTENSITY(INCH/HOUR) =  5.477
  *USER SPECIFIED(SUBAREA):
  USER-SPECIFIED RUNOFF COEFFICIENT = .3500
  S.C.S. CURVE NUMBER (AMC II) =   0
  TRAVEL TIME COMPUTED USING ESTIMATED FLOW(CFS) =     89.40
  TRAVEL TIME THRU SUBAREA BASED ON VELOCITY(FEET/SEC.) =  26.72
  AVERAGE FLOW DEPTH(FEET) =   1.12   FLOOD WIDTH(FEET) =    7.08
  "V" GUTTER FLOW TRAVEL TIME(MIN.) =   0.27   Tc(MIN.) =    9.76
  SUBAREA AREA(ACRES) =    3.77       SUBAREA RUNOFF(CFS) =    7.23
  AREA-AVERAGE RUNOFF COEFFICIENT =  0.350
  TOTAL AREA(ACRES) =       48.1         PEAK FLOW RATE(CFS) =      92.16

  END OF SUBAREA "V" GUTTER HYDRAULICS:
  DEPTH(FEET) =  1.13   FLOOD WIDTH(FEET) =    7.20
  FLOW VELOCITY(FEET/SEC.) =  26.85   DEPTH*VELOCITY(FT*FT/SEC) =  30.34
  LONGEST FLOWPATH FROM NODE    300.00 TO NODE    323.00 =    2735.00 FEET.

****************************************************************************
  FLOW PROCESS FROM NODE    323.00 TO NODE    323.00 IS CODE =   1
----------------------------------------------------------------------------
  >>>>>DESIGNATE INDEPENDENT STREAM FOR CONFLUENCE<<<<<
============================================================================
  TOTAL NUMBER OF STREAMS =  2
  CONFLUENCE VALUES USED FOR INDEPENDENT STREAM  1 ARE:
  TIME OF CONCENTRATION(MIN.) =    9.76
  RAINFALL INTENSITY(INCH/HR) =   5.48
  TOTAL STREAM AREA(ACRES) =    48.08
  PEAK FLOW RATE(CFS) AT CONFLUENCE =     92.16

****************************************************************************
  FLOW PROCESS FROM NODE    324.00 TO NODE    325.00 IS CODE =  21
----------------------------------------------------------------------------
  >>>>>RATIONAL METHOD INITIAL SUBAREA ANALYSIS<<<<<
============================================================================
  *USER SPECIFIED(SUBAREA):
  USER-SPECIFIED RUNOFF COEFFICIENT = .3500
  S.C.S. CURVE NUMBER (AMC II) =   0
  INITIAL SUBAREA FLOW-LENGTH(FEET) =    70.00
  UPSTREAM ELEVATION(FEET) =    944.00
  DOWNSTREAM ELEVATION(FEET) =    929.00
  ELEVATION DIFFERENCE(FEET) =     15.00
  SUBAREA OVERLAND TIME OF FLOW(MIN.) =    5.243
  WARNING: THE MAXIMUM OVERLAND FLOW SLOPE, 10.%, IS USED IN Tc CALCULATION!
   100 YEAR RAINFALL INTENSITY(INCH/HOUR) =  8.177
  SUBAREA RUNOFF(CFS) =      0.29
  TOTAL AREA(ACRES) =      0.10   TOTAL RUNOFF(CFS) =      0.29

****************************************************************************
  FLOW PROCESS FROM NODE    325.00 TO NODE    326.00 IS CODE =  51
----------------------------------------------------------------------------
  >>>>>COMPUTE TRAPEZOIDAL CHANNEL FLOW<<<<<
  >>>>>TRAVELTIME THRU SUBAREA (EXISTING ELEMENT)<<<<<
============================================================================
  ELEVATION DATA: UPSTREAM(FEET) =    929.00  DOWNSTREAM(FEET) =    906.00
  CHANNEL LENGTH THRU SUBAREA(FEET) =   175.00   CHANNEL SLOPE =  0.1314
  CHANNEL BASE(FEET) =    3.00   "Z" FACTOR =   2.000
  MANNING'S FACTOR = 0.030   MAXIMUM DEPTH(FEET) =  10.00
```

```
 100 YEAR RAINFALL INTENSITY(INCH/HOUR) =  7.437
*USER SPECIFIED(SUBAREA):
USER-SPECIFIED RUNOFF COEFFICIENT = .3500
S.C.S. CURVE NUMBER (AMC II) =   0
TRAVEL TIME COMPUTED USING ESTIMATED FLOW(CFS) =       0.99
TRAVEL TIME THRU SUBAREA BASED ON VELOCITY(FEET/SEC.) =   3.51
AVERAGE FLOW DEPTH(FEET) =   0.09   TRAVEL TIME(MIN.) =   0.83
Tc(MIN.) =    6.07
SUBAREA AREA(ACRES) =     0.54       SUBAREA RUNOFF(CFS) =    1.41
AREA-AVERAGE RUNOFF COEFFICIENT =  0.350
TOTAL AREA(ACRES) =        0.6         PEAK FLOW RATE(CFS) =       1.67

END OF SUBAREA CHANNEL FLOW HYDRAULICS:
DEPTH(FEET) =  0.12   FLOW VELOCITY(FEET/SEC.) =   4.10
LONGEST FLOWPATH FROM NODE    324.00 TO NODE    326.00 =     245.00 FEET.

****************************************************************************
FLOW PROCESS FROM NODE    326.00 TO NODE    327.00 IS CODE =  91
----------------------------------------------------------------------------
>>>>>COMPUTE "V" GUTTER FLOW TRAVEL TIME THRU SUBAREA<<<<<
============================================================================
UPSTREAM NODE ELEVATION(FEET) =    906.00
DOWNSTREAM NODE ELEVATION(FEET) =    871.00
CHANNEL LENGTH THRU SUBAREA(FEET) =   310.00
"V" GUTTER WIDTH(FEET) =   4.00   GUTTER HIKE(FEET) =  0.800
PAVEMENT LIP(FEET) =  0.010   MANNING'S N = .0130
PAVEMENT CROSSFALL(DECIMAL NOTATION) = 0.20000
MAXIMUM DEPTH(FEET) =   1.50
 100 YEAR RAINFALL INTENSITY(INCH/HOUR) =  7.238
*USER SPECIFIED(SUBAREA):
USER-SPECIFIED RUNOFF COEFFICIENT = .3500
S.C.S. CURVE NUMBER (AMC II) =   0
TRAVEL TIME COMPUTED USING ESTIMATED FLOW(CFS) =      2.68
TRAVEL TIME THRU SUBAREA BASED ON VELOCITY(FEET/SEC.) =  19.84
AVERAGE FLOW DEPTH(FEET) =   0.80   FLOOD WIDTH(FEET) =    4.00
"V" GUTTER FLOW TRAVEL TIME(MIN.) =   0.26   Tc(MIN.) =    6.33
SUBAREA AREA(ACRES) =    0.80       SUBAREA RUNOFF(CFS) =    2.03
AREA-AVERAGE RUNOFF COEFFICIENT =  0.350
TOTAL AREA(ACRES) =        1.4         PEAK FLOW RATE(CFS) =       3.65

       NOTE:TRAVEL TIME ESTIMATES BASED ON NORMAL DEPTH
       IN A FLOWING-FULL GUTTER(NORMAL DEPTH = GUTTER HIKE)


END OF SUBAREA "V" GUTTER HYDRAULICS:
DEPTH(FEET) =  0.80   FLOOD WIDTH(FEET) =    4.00
FLOW VELOCITY(FEET/SEC.) =  19.84   DEPTH*VELOCITY(FT*FT/SEC) =  15.88
LONGEST FLOWPATH FROM NODE    324.00 TO NODE    327.00 =     555.00 FEET.

****************************************************************************
FLOW PROCESS FROM NODE    327.00 TO NODE    328.00 IS CODE =  31
----------------------------------------------------------------------------
>>>>>COMPUTE PIPE-FLOW TRAVEL TIME THRU SUBAREA<<<<<
>>>>>USING COMPUTER-ESTIMATED PIPESIZE (NON-PRESSURE FLOW)<<<<<
============================================================================
ELEVATION DATA: UPSTREAM(FEET) =   865.00  DOWNSTREAM(FEET) =   820.00
FLOW LENGTH(FEET) =   780.00   MANNING'S N =  0.013
ESTIMATED PIPE DIAMETER(INCH) INCREASED TO 18.000
DEPTH OF FLOW IN  18.0 INCH PIPE IS   4.8 INCHES
PIPE-FLOW VELOCITY(FEET/SEC.) =   9.78
ESTIMATED PIPE DIAMETER(INCH) =  18.00    NUMBER OF PIPES =   1
PIPE-FLOW(CFS) =       3.65
PIPE TRAVEL TIME(MIN.) =   1.33    Tc(MIN.) =    7.66
```

```
  LONGEST FLOWPATH FROM NODE    324.00 TO NODE    328.00 =    1335.00 FEET.

****************************************************************************
  FLOW PROCESS FROM NODE    328.00 TO NODE    323.00 IS CODE =  52
----------------------------------------------------------------------------
  >>>>>COMPUTE NATURAL VALLEY CHANNEL FLOW<<<<<
  >>>>>TRAVELTIME THRU SUBAREA<<<<<
============================================================================
  ELEVATION DATA: UPSTREAM(FEET) =    820.00  DOWNSTREAM(FEET) =    770.00
  CHANNEL LENGTH THRU SUBAREA(FEET) =   200.00   CHANNEL SLOPE =  0.2500
  NOTE: CHANNEL SLOPE OF .1 WAS ASSUMED IN VELOCITY ESTIMATION
  CHANNEL FLOW THRU SUBAREA(CFS) =       3.65
  FLOW VELOCITY(FEET/SEC) =   6.20 (PER LACFCD/RCFC&WCD HYDROLOGY MANUAL)
  TRAVEL TIME(MIN.) =   0.54   Tc(MIN.) =    8.20
  LONGEST FLOWPATH FROM NODE    324.00 TO NODE    323.00 =    1535.00 FEET.

****************************************************************************
  FLOW PROCESS FROM NODE    323.00 TO NODE    323.00 IS CODE =   1
----------------------------------------------------------------------------
  >>>>>DESIGNATE INDEPENDENT STREAM FOR CONFLUENCE<<<<<
  >>>>>AND COMPUTE VARIOUS CONFLUENCED STREAM VALUES<<<<<
============================================================================
  TOTAL NUMBER OF STREAMS =  2
  CONFLUENCE VALUES USED FOR INDEPENDENT STREAM  2 ARE:
  TIME OF CONCENTRATION(MIN.) =    8.20
  RAINFALL INTENSITY(INCH/HR) =   6.13
  TOTAL STREAM AREA(ACRES) =     1.44
  PEAK FLOW RATE(CFS) AT CONFLUENCE =      3.65

  ** CONFLUENCE DATA **
  STREAM     RUNOFF       Tc      INTENSITY      AREA
  NUMBER      (CFS)     (MIN.)   (INCH/HOUR)    (ACRE)
      1       92.16     9.76        5.477         48.08
      2        3.65     8.20        6.128          1.44

  RAINFALL INTENSITY AND TIME OF CONCENTRATION RATIO
  CONFLUENCE FORMULA USED FOR  2 STREAMS.

  ** PEAK FLOW RATE TABLE **
  STREAM     RUNOFF      Tc      INTENSITY
  NUMBER      (CFS)    (MIN.)   (INCH/HOUR)
      1       86.02     8.20       6.128
      2       95.42     9.76       5.477

  COMPUTED CONFLUENCE ESTIMATES ARE AS FOLLOWS:
  PEAK FLOW RATE(CFS) =      95.42   Tc(MIN.) =    9.76
  TOTAL AREA(ACRES) =       49.5
  LONGEST FLOWPATH FROM NODE    300.00 TO NODE    323.00 =    2735.00 FEET.

****************************************************************************
  FLOW PROCESS FROM NODE    323.00 TO NODE    329.00 IS CODE =  31
----------------------------------------------------------------------------
  >>>>>COMPUTE PIPE-FLOW TRAVEL TIME THRU SUBAREA<<<<<
  >>>>>USING COMPUTER-ESTIMATED PIPESIZE (NON-PRESSURE FLOW)<<<<<
============================================================================
  ELEVATION DATA: UPSTREAM(FEET) =   767.00  DOWNSTREAM(FEET) =   750.00
  FLOW LENGTH(FEET) =   280.00   MANNING'S N =  0.013
  DEPTH OF FLOW IN  30.0 INCH PIPE IS  24.5 INCHES
  PIPE-FLOW VELOCITY(FEET/SEC.) =  22.27
  ESTIMATED PIPE DIAMETER(INCH) =  30.00    NUMBER OF PIPES =   1
  PIPE-FLOW(CFS) =      95.42
  PIPE TRAVEL TIME(MIN.) =   0.21    Tc(MIN.) =    9.97
  LONGEST FLOWPATH FROM NODE    300.00 TO NODE    329.00 =    3015.00 FEET.
```

```
****************************************************************************
  FLOW PROCESS FROM NODE    329.00 TO NODE    329.50 IS CODE =  51
----------------------------------------------------------------------------
  >>>>>COMPUTE TRAPEZOIDAL CHANNEL FLOW<<<<<
  >>>>>TRAVELTIME THRU SUBAREA (EXISTING ELEMENT)<<<<<
============================================================================
  ELEVATION DATA: UPSTREAM(FEET) =    750.00  DOWNSTREAM(FEET) =    734.00
  CHANNEL LENGTH THRU SUBAREA(FEET) =   140.00   CHANNEL SLOPE =  0.1143
  CHANNEL BASE(FEET) =    3.00   "Z" FACTOR =   2.000
  MANNING'S FACTOR = 0.030   MAXIMUM DEPTH(FEET) =  10.00
  CHANNEL FLOW THRU SUBAREA(CFS) =      95.42
  FLOW VELOCITY(FEET/SEC.) =  14.28   FLOW DEPTH(FEET) =   1.23
  TRAVEL TIME(MIN.) =   0.16   Tc(MIN.) =   10.13
  LONGEST FLOWPATH FROM NODE    300.00 TO NODE    329.50 =    3155.00 FEET.

****************************************************************************
  FLOW PROCESS FROM NODE    329.50 TO NODE    329.50 IS CODE =  10
----------------------------------------------------------------------------
  >>>>>MAIN-STREAM MEMORY COPIED ONTO MEMORY BANK # 2 <<<<<
============================================================================

****************************************************************************
  FLOW PROCESS FROM NODE    331.00 TO NODE    332.00 IS CODE =  21
----------------------------------------------------------------------------
  >>>>>RATIONAL METHOD INITIAL SUBAREA ANALYSIS<<<<<
============================================================================
  *USER SPECIFIED(SUBAREA):
  USER-SPECIFIED RUNOFF COEFFICIENT = .7100
  S.C.S. CURVE NUMBER (AMC II) =   0
  INITIAL SUBAREA FLOW-LENGTH(FEET) =    70.00
  UPSTREAM ELEVATION(FEET) =    872.00
  DOWNSTREAM ELEVATION(FEET) =    871.00
  ELEVATION DIFFERENCE(FEET) =      1.00
  SUBAREA OVERLAND TIME OF FLOW(MIN.) =    5.215
   100 YEAR RAINFALL INTENSITY(INCH/HOUR) =  8.205
  SUBAREA RUNOFF(CFS) =      1.34
  TOTAL AREA(ACRES) =      0.23   TOTAL RUNOFF(CFS) =      1.34

****************************************************************************
  FLOW PROCESS FROM NODE    332.00 TO NODE    333.00 IS CODE =  62
----------------------------------------------------------------------------
  >>>>>COMPUTE STREET FLOW TRAVEL TIME THRU SUBAREA<<<<<
  >>>>>(STREET TABLE SECTION #  1 USED)<<<<<
============================================================================
  UPSTREAM ELEVATION(FEET) =  871.00  DOWNSTREAM ELEVATION(FEET) =  817.00
  STREET LENGTH(FEET) =   540.00   CURB HEIGHT(INCHES) =  4.0
  STREET HALFWIDTH(FEET) = 12.00

  DISTANCE FROM CROWN TO CROSSFALL GRADEBREAK(FEET) =   6.00
  INSIDE STREET CROSSFALL(DECIMAL) =  0.020
  OUTSIDE STREET CROSSFALL(DECIMAL)  =  0.020

  SPECIFIED NUMBER OF HALFSTREETS CARRYING RUNOFF =  1
  STREET PARKWAY CROSSFALL(DECIMAL)  =  0.020
  Manning's FRICTION FACTOR for Streetflow Section(curb-to-curb) =   0.0150
  Manning's FRICTION FACTOR for Back-of-Walk Flow Section =   0.0150

    **TRAVEL TIME COMPUTED USING ESTIMATED FLOW(CFS) =       5.03
    STREETFLOW MODEL RESULTS USING ESTIMATED FLOW:
    STREET FLOW DEPTH(FEET) =  0.20
    HALFSTREET FLOOD WIDTH(FEET) =    8.95
    AVERAGE FLOW VELOCITY(FEET/SEC.) =    6.27
```

```
  PRODUCT OF DEPTH&VELOCITY(FT*FT/SEC.) =    1.23
 STREET FLOW TRAVEL TIME(MIN.) =   1.44   Tc(MIN.) =    6.65
  100 YEAR RAINFALL INTENSITY(INCH/HOUR) =  7.014
 *USER SPECIFIED(SUBAREA):
 USER-SPECIFIED RUNOFF COEFFICIENT = .7100
 S.C.S. CURVE NUMBER (AMC II) =   0
 AREA-AVERAGE RUNOFF COEFFICIENT =  0.710
 SUBAREA AREA(ACRES) =    1.48      SUBAREA RUNOFF(CFS) =    7.37
 TOTAL AREA(ACRES) =        1.7        PEAK FLOW RATE(CFS) =       8.52

 END OF SUBAREA STREET FLOW HYDRAULICS:
 DEPTH(FEET) = 0.24   HALFSTREET FLOOD WIDTH(FEET) =  10.92
 FLOW VELOCITY(FEET/SEC.) =  7.13   DEPTH*VELOCITY(FT*FT/SEC.) =   1.69
 LONGEST FLOWPATH FROM NODE    331.00 TO NODE    333.00 =     610.00 FEET.

****************************************************************************
 FLOW PROCESS FROM NODE    333.00 TO NODE    334.00 IS CODE =  31
----------------------------------------------------------------------------
 >>>>>COMPUTE PIPE-FLOW TRAVEL TIME THRU SUBAREA<<<<<
 >>>>>USING COMPUTER-ESTIMATED PIPESIZE (NON-PRESSURE FLOW)<<<<<
============================================================================
 ELEVATION DATA: UPSTREAM(FEET) =   811.00  DOWNSTREAM(FEET) =   810.00
 FLOW LENGTH(FEET) =    35.00   MANNING'S N =  0.013
 ESTIMATED PIPE DIAMETER(INCH) INCREASED TO 18.000
 DEPTH OF FLOW IN  18.0 INCH PIPE IS   9.1 INCHES
 PIPE-FLOW VELOCITY(FEET/SEC.) =   9.56
 ESTIMATED PIPE DIAMETER(INCH) =  18.00    NUMBER OF PIPES =   1
 PIPE-FLOW(CFS) =       8.52
 PIPE TRAVEL TIME(MIN.) =   0.06    Tc(MIN.) =    6.71
 LONGEST FLOWPATH FROM NODE    331.00 TO NODE    334.00 =     645.00 FEET.

****************************************************************************
 FLOW PROCESS FROM NODE    334.00 TO NODE    334.00 IS CODE =   1
----------------------------------------------------------------------------
 >>>>>DESIGNATE INDEPENDENT STREAM FOR CONFLUENCE<<<<<
============================================================================
 TOTAL NUMBER OF STREAMS =  2
 CONFLUENCE VALUES USED FOR INDEPENDENT STREAM  1 ARE:
 TIME OF CONCENTRATION(MIN.) =    6.71
 RAINFALL INTENSITY(INCH/HR) =   6.97
 TOTAL STREAM AREA(ACRES) =     1.71
 PEAK FLOW RATE(CFS) AT CONFLUENCE =      8.52

****************************************************************************
 FLOW PROCESS FROM NODE    335.00 TO NODE    336.00 IS CODE =  21
----------------------------------------------------------------------------
 >>>>>RATIONAL METHOD INITIAL SUBAREA ANALYSIS<<<<<
============================================================================
 *USER SPECIFIED(SUBAREA):
 USER-SPECIFIED RUNOFF COEFFICIENT = .7100
 S.C.S. CURVE NUMBER (AMC II) =   0
 INITIAL SUBAREA FLOW-LENGTH(FEET) =    70.00
 UPSTREAM ELEVATION(FEET) =    872.00
 DOWNSTREAM ELEVATION(FEET) =    871.00
 ELEVATION DIFFERENCE(FEET) =      1.00
 SUBAREA OVERLAND TIME OF FLOW(MIN.) =    5.215
  100 YEAR RAINFALL INTENSITY(INCH/HOUR) =  8.205
 SUBAREA RUNOFF(CFS) =      1.28
 TOTAL AREA(ACRES) =      0.22   TOTAL RUNOFF(CFS) =      1.28

****************************************************************************
 FLOW PROCESS FROM NODE    336.00 TO NODE    334.00 IS CODE =  62
----------------------------------------------------------------------------
```

```
  >>>>>COMPUTE STREET FLOW TRAVEL TIME THRU SUBAREA<<<<<
  >>>>>(STREET TABLE SECTION #  1 USED)<<<<<
================================================================================
  UPSTREAM ELEVATION(FEET) =  871.00  DOWNSTREAM ELEVATION(FEET) =  817.00
  STREET LENGTH(FEET) =   600.00   CURB HEIGHT(INCHES) =  4.0
  STREET HALFWIDTH(FEET) = 12.00

  DISTANCE FROM CROWN TO CROSSFALL GRADEBREAK(FEET) =   6.00
  INSIDE STREET CROSSFALL(DECIMAL) =  0.020
  OUTSIDE STREET CROSSFALL(DECIMAL)  =  0.020

  SPECIFIED NUMBER OF HALFSTREETS CARRYING RUNOFF =  1
  STREET PARKWAY CROSSFALL(DECIMAL)  =  0.020
  Manning's FRICTION FACTOR for Streetflow Section(curb-to-curb) =   0.0150
  Manning's FRICTION FACTOR for Back-of-Walk Flow Section =   0.0150

    **TRAVEL TIME COMPUTED USING ESTIMATED FLOW(CFS) =       6.03
    STREETFLOW MODEL RESULTS USING ESTIMATED FLOW:
    STREET FLOW DEPTH(FEET) =  0.21
    HALFSTREET FLOOD WIDTH(FEET) =    9.80
    AVERAGE FLOW VELOCITY(FEET/SEC.) =    6.28
    PRODUCT OF DEPTH&VELOCITY(FT*FT/SEC.) =    1.34
  STREET FLOW TRAVEL TIME(MIN.) =   1.59   Tc(MIN.) =    6.81
   100 YEAR RAINFALL INTENSITY(INCH/HOUR) =  6.909
  *USER SPECIFIED(SUBAREA):
  USER-SPECIFIED RUNOFF COEFFICIENT = .7100
  S.C.S. CURVE NUMBER (AMC II) =   0
  AREA-AVERAGE RUNOFF COEFFICIENT =  0.710
  SUBAREA AREA(ACRES) =    1.93      SUBAREA RUNOFF(CFS) =    9.47
  TOTAL AREA(ACRES) =        2.1        PEAK FLOW RATE(CFS) =      10.55

  END OF SUBAREA STREET FLOW HYDRAULICS:
  DEPTH(FEET) = 0.26   HALFSTREET FLOOD WIDTH(FEET) =  12.00
  FLOW VELOCITY(FEET/SEC.) =  7.13   DEPTH*VELOCITY(FT*FT/SEC.) =   1.84
  LONGEST FLOWPATH FROM NODE    335.00 TO NODE    334.00 =     670.00 FEET.

****************************************************************************
  FLOW PROCESS FROM NODE    334.00 TO NODE    334.00 IS CODE =   1
----------------------------------------------------------------------------
  >>>>>DESIGNATE INDEPENDENT STREAM FOR CONFLUENCE<<<<<
  >>>>>AND COMPUTE VARIOUS CONFLUENCED STREAM VALUES<<<<<
================================================================================
  TOTAL NUMBER OF STREAMS =  2
  CONFLUENCE VALUES USED FOR INDEPENDENT STREAM  2 ARE:
  TIME OF CONCENTRATION(MIN.) =    6.81
  RAINFALL INTENSITY(INCH/HR) =   6.91
  TOTAL STREAM AREA(ACRES) =     2.15
  PEAK FLOW RATE(CFS) AT CONFLUENCE =     10.55

  ** CONFLUENCE DATA **
  STREAM     RUNOFF       Tc      INTENSITY      AREA
  NUMBER      (CFS)     (MIN.)   (INCH/HOUR)    (ACRE)
      1        8.52     6.71        6.973          1.71
      2       10.55     6.81        6.909          2.15

  RAINFALL INTENSITY AND TIME OF CONCENTRATION RATIO
  CONFLUENCE FORMULA USED FOR  2 STREAMS.

  ** PEAK FLOW RATE TABLE **
  STREAM     RUNOFF      Tc      INTENSITY
  NUMBER      (CFS)    (MIN.)   (INCH/HOUR)
      1       18.91     6.71       6.973
      2       18.98     6.81       6.909
```

```
  COMPUTED CONFLUENCE ESTIMATES ARE AS FOLLOWS:
  PEAK FLOW RATE(CFS) =      18.98   Tc(MIN.) =    6.81
  TOTAL AREA(ACRES) =        3.9
  LONGEST FLOWPATH FROM NODE    335.00 TO NODE    334.00 =     670.00 FEET.

****************************************************************************
  FLOW PROCESS FROM NODE    334.00 TO NODE    337.00 IS CODE =  31
----------------------------------------------------------------------------
  >>>>>COMPUTE PIPE-FLOW TRAVEL TIME THRU SUBAREA<<<<<
  >>>>>USING COMPUTER-ESTIMATED PIPESIZE (NON-PRESSURE FLOW)<<<<<
============================================================================
  ELEVATION DATA: UPSTREAM(FEET) =   810.00  DOWNSTREAM(FEET) =   759.00
  FLOW LENGTH(FEET) =   205.00   MANNING'S N =  0.013
  ESTIMATED PIPE DIAMETER(INCH) INCREASED TO 18.000
  DEPTH OF FLOW IN  18.0 INCH PIPE IS   7.7 INCHES
  PIPE-FLOW VELOCITY(FEET/SEC.) =  26.24
  ESTIMATED PIPE DIAMETER(INCH) =  18.00    NUMBER OF PIPES =   1
  PIPE-FLOW(CFS) =      18.98
  PIPE TRAVEL TIME(MIN.) =   0.13    Tc(MIN.) =    6.94
  LONGEST FLOWPATH FROM NODE    335.00 TO NODE    337.00 =     875.00 FEET.

****************************************************************************
  FLOW PROCESS FROM NODE    337.00 TO NODE    329.50 IS CODE =  31
----------------------------------------------------------------------------
  >>>>>COMPUTE PIPE-FLOW TRAVEL TIME THRU SUBAREA<<<<<
  >>>>>USING COMPUTER-ESTIMATED PIPESIZE (NON-PRESSURE FLOW)<<<<<
============================================================================
  ELEVATION DATA: UPSTREAM(FEET) =   759.00  DOWNSTREAM(FEET) =   734.00
  FLOW LENGTH(FEET) =   100.00   MANNING'S N =  0.013
  ESTIMATED PIPE DIAMETER(INCH) INCREASED TO 18.000
  DEPTH OF FLOW IN  18.0 INCH PIPE IS   7.7 INCHES
  PIPE-FLOW VELOCITY(FEET/SEC.) =  26.29
  ESTIMATED PIPE DIAMETER(INCH) =  18.00    NUMBER OF PIPES =   1
  PIPE-FLOW(CFS) =      18.98
  PIPE TRAVEL TIME(MIN.) =   0.06    Tc(MIN.) =    7.00
  LONGEST FLOWPATH FROM NODE    335.00 TO NODE    329.50 =     975.00 FEET.

****************************************************************************
  FLOW PROCESS FROM NODE    329.50 TO NODE    329.50 IS CODE =  11
----------------------------------------------------------------------------
  >>>>>CONFLUENCE MEMORY BANK # 2 WITH THE MAIN-STREAM MEMORY<<<<<
============================================================================

  ** MAIN STREAM CONFLUENCE DATA **
  STREAM     RUNOFF      Tc      INTENSITY     AREA
  NUMBER      (CFS)    (MIN.)   (INCH/HOUR)   (ACRE)
      1       18.98     7.00       6.785        3.86
  LONGEST FLOWPATH FROM NODE    335.00 TO NODE    329.50 =     975.00 FEET.

  ** MEMORY BANK #  2 CONFLUENCE DATA **
  STREAM     RUNOFF      Tc      INTENSITY     AREA
  NUMBER      (CFS)    (MIN.)   (INCH/HOUR)   (ACRE)
      1       95.42    10.13       5.346       49.52
  LONGEST FLOWPATH FROM NODE    300.00 TO NODE    329.50 =    3155.00 FEET.

  ** PEAK FLOW RATE TABLE **
  STREAM    RUNOFF       Tc      INTENSITY
  NUMBER     (CFS)     (MIN.)   (INCH/HOUR)
      1      84.92       7.00        6.785
      2     110.38      10.13        5.346

  COMPUTED CONFLUENCE ESTIMATES ARE AS FOLLOWS:
```

```
  PEAK FLOW RATE(CFS) =     110.38   Tc(MIN.) =   10.13
  TOTAL AREA(ACRES) =       53.4

****************************************************************************
  FLOW PROCESS FROM NODE    329.50 TO NODE    329.50 IS CODE =  12
----------------------------------------------------------------------------
  >>>>>CLEAR MEMORY BANK # 2 <<<<<
============================================================================

****************************************************************************
  FLOW PROCESS FROM NODE    329.50 TO NODE    330.00 IS CODE =  51
----------------------------------------------------------------------------
  >>>>>COMPUTE TRAPEZOIDAL CHANNEL FLOW<<<<<
  >>>>>TRAVELTIME THRU SUBAREA (EXISTING ELEMENT)<<<<<
============================================================================
  ELEVATION DATA: UPSTREAM(FEET) =    734.00  DOWNSTREAM(FEET) =    707.00
  CHANNEL LENGTH THRU SUBAREA(FEET) =   600.00   CHANNEL SLOPE =  0.0450
  CHANNEL BASE(FEET) =    3.00   "Z" FACTOR =   2.000
  MANNING'S FACTOR = 0.030   MAXIMUM DEPTH(FEET) =  10.00
   100 YEAR RAINFALL INTENSITY(INCH/HOUR) =  5.049
  *USER SPECIFIED(SUBAREA):
  USER-SPECIFIED RUNOFF COEFFICIENT = .3500
  S.C.S. CURVE NUMBER (AMC II) =   0
  TRAVEL TIME COMPUTED USING ESTIMATED FLOW(CFS) =     115.70
  TRAVEL TIME THRU SUBAREA BASED ON VELOCITY(FEET/SEC.) =  10.67
  AVERAGE FLOW DEPTH(FEET) =   1.70   TRAVEL TIME(MIN.) =   0.94
  Tc(MIN.) =   11.07
  SUBAREA AREA(ACRES) =     6.02       SUBAREA RUNOFF(CFS) =   10.64
  AREA-AVERAGE RUNOFF COEFFICIENT =  0.373
  TOTAL AREA(ACRES) =       59.4         PEAK FLOW RATE(CFS) =     111.99

  END OF SUBAREA CHANNEL FLOW HYDRAULICS:
  DEPTH(FEET) =  1.67   FLOW VELOCITY(FEET/SEC.) =  10.60
  LONGEST FLOWPATH FROM NODE    300.00 TO NODE    330.00 =    3755.00 FEET.

****************************************************************************
  FLOW PROCESS FROM NODE    330.00 TO NODE    309.50 IS CODE =  31
----------------------------------------------------------------------------
  >>>>>COMPUTE PIPE-FLOW TRAVEL TIME THRU SUBAREA<<<<<
  >>>>>USING COMPUTER-ESTIMATED PIPESIZE (NON-PRESSURE FLOW)<<<<<
============================================================================
  ELEVATION DATA: UPSTREAM(FEET) =   707.00  DOWNSTREAM(FEET) =   706.00
  FLOW LENGTH(FEET) =    83.00   MANNING'S N =  0.013
  DEPTH OF FLOW IN  45.0 INCH PIPE IS  33.0 INCHES
  PIPE-FLOW VELOCITY(FEET/SEC.) =  12.88
  ESTIMATED PIPE DIAMETER(INCH) =  45.00    NUMBER OF PIPES =   1
  PIPE-FLOW(CFS) =     111.99
  PIPE TRAVEL TIME(MIN.) =   0.11    Tc(MIN.) =   11.18
  LONGEST FLOWPATH FROM NODE    300.00 TO NODE    309.50 =    3838.00 FEET.

****************************************************************************
  FLOW PROCESS FROM NODE    309.50 TO NODE    309.00 IS CODE =  51
----------------------------------------------------------------------------
  >>>>>COMPUTE TRAPEZOIDAL CHANNEL FLOW<<<<<
  >>>>>TRAVELTIME THRU SUBAREA (EXISTING ELEMENT)<<<<<
============================================================================
  ELEVATION DATA: UPSTREAM(FEET) =    700.00  DOWNSTREAM(FEET) =    692.00
  CHANNEL LENGTH THRU SUBAREA(FEET) =   440.00   CHANNEL SLOPE =  0.0182
  CHANNEL BASE(FEET) =    3.00   "Z" FACTOR =   2.000
  MANNING'S FACTOR = 0.030   MAXIMUM DEPTH(FEET) =  10.00
   100 YEAR RAINFALL INTENSITY(INCH/HOUR) =  4.756
  *USER SPECIFIED(SUBAREA):
  USER-SPECIFIED RUNOFF COEFFICIENT = .3500
```

```
  S.C.S. CURVE NUMBER (AMC II) =   0
  TRAVEL TIME COMPUTED USING ESTIMATED FLOW(CFS) =     112.70
  TRAVEL TIME THRU SUBAREA BASED ON VELOCITY(FEET/SEC.) =   7.58
  AVERAGE FLOW DEPTH(FEET) =   2.08   TRAVEL TIME(MIN.) =   0.97
  Tc(MIN.) =   12.15
  SUBAREA AREA(ACRES) =     0.85       SUBAREA RUNOFF(CFS) =    1.41
  AREA-AVERAGE RUNOFF COEFFICIENT =  0.373
  TOTAL AREA(ACRES) =       60.2         PEAK FLOW RATE(CFS) =     111.99

  END OF SUBAREA CHANNEL FLOW HYDRAULICS:
  DEPTH(FEET) =  2.07   FLOW VELOCITY(FEET/SEC.) =   7.57
  LONGEST FLOWPATH FROM NODE    300.00 TO NODE    309.00 =    4278.00 FEET.

****************************************************************************
  FLOW PROCESS FROM NODE    309.00 TO NODE    309.00 IS CODE =  10
----------------------------------------------------------------------------
  >>>>>MAIN-STREAM MEMORY COPIED ONTO MEMORY BANK # 2 <<<<<
============================================================================

****************************************************************************
  FLOW PROCESS FROM NODE    339.00 TO NODE    340.00 IS CODE =  21
----------------------------------------------------------------------------
  >>>>>RATIONAL METHOD INITIAL SUBAREA ANALYSIS<<<<<
============================================================================
  *USER SPECIFIED(SUBAREA):
  USER-SPECIFIED RUNOFF COEFFICIENT = .7100
  S.C.S. CURVE NUMBER (AMC II) =   0
  INITIAL SUBAREA FLOW-LENGTH(FEET) =    70.00
  UPSTREAM ELEVATION(FEET) =    818.00
  DOWNSTREAM ELEVATION(FEET) =    817.00
  ELEVATION DIFFERENCE(FEET) =      1.00
  SUBAREA OVERLAND TIME OF FLOW(MIN.) =    5.215
   100 YEAR RAINFALL INTENSITY(INCH/HOUR) =  8.205
  SUBAREA RUNOFF(CFS) =      0.52
  TOTAL AREA(ACRES) =      0.09   TOTAL RUNOFF(CFS) =      0.52

****************************************************************************
  FLOW PROCESS FROM NODE    340.00 TO NODE    341.00 IS CODE =  62
----------------------------------------------------------------------------
  >>>>>COMPUTE STREET FLOW TRAVEL TIME THRU SUBAREA<<<<<
  >>>>>(STREET TABLE SECTION #  1 USED)<<<<<
============================================================================
  UPSTREAM ELEVATION(FEET) =  817.00  DOWNSTREAM ELEVATION(FEET) =  790.00
  STREET LENGTH(FEET) =   370.00   CURB HEIGHT(INCHES) =  4.0
  STREET HALFWIDTH(FEET) = 12.00

  DISTANCE FROM CROWN TO CROSSFALL GRADEBREAK(FEET) =   6.00
  INSIDE STREET CROSSFALL(DECIMAL) =  0.020
  OUTSIDE STREET CROSSFALL(DECIMAL)  =  0.020

  SPECIFIED NUMBER OF HALFSTREETS CARRYING RUNOFF =  1
  STREET PARKWAY CROSSFALL(DECIMAL)  =  0.020
  Manning's FRICTION FACTOR for Streetflow Section(curb-to-curb) =   0.0150
  Manning's FRICTION FACTOR for Back-of-Walk Flow Section =   0.0150

    **TRAVEL TIME COMPUTED USING ESTIMATED FLOW(CFS) =       1.44
    STREETFLOW MODEL RESULTS USING ESTIMATED FLOW:
    STREET FLOW DEPTH(FEET) =  0.14
    HALFSTREET FLOOD WIDTH(FEET) =    5.95
    AVERAGE FLOW VELOCITY(FEET/SEC.) =    4.05
    PRODUCT OF DEPTH&VELOCITY(FT*FT/SEC.) =    0.55
  STREET FLOW TRAVEL TIME(MIN.) =   1.52   Tc(MIN.) =    6.74
   100 YEAR RAINFALL INTENSITY(INCH/HOUR) =  6.954
```

```
  *USER SPECIFIED(SUBAREA):
  USER-SPECIFIED RUNOFF COEFFICIENT = .7100
  S.C.S. CURVE NUMBER (AMC II) =   0
  AREA-AVERAGE RUNOFF COEFFICIENT =  0.710
  SUBAREA AREA(ACRES) =    0.37      SUBAREA RUNOFF(CFS) =    1.83
  TOTAL AREA(ACRES) =        0.5        PEAK FLOW RATE(CFS) =       2.27

  END OF SUBAREA STREET FLOW HYDRAULICS:
  DEPTH(FEET) = 0.16   HALFSTREET FLOOD WIDTH(FEET) =   7.08
  FLOW VELOCITY(FEET/SEC.) =  4.52   DEPTH*VELOCITY(FT*FT/SEC.) =   0.72
  LONGEST FLOWPATH FROM NODE    339.00 TO NODE    341.00 =     440.00 FEET.

****************************************************************************
  FLOW PROCESS FROM NODE    341.00 TO NODE    338.00 IS CODE =  31
----------------------------------------------------------------------------
  >>>>>COMPUTE PIPE-FLOW TRAVEL TIME THRU SUBAREA<<<<<
  >>>>>USING COMPUTER-ESTIMATED PIPESIZE (NON-PRESSURE FLOW)<<<<<
============================================================================
  ELEVATION DATA: UPSTREAM(FEET) =   784.00  DOWNSTREAM(FEET) =   783.00
  FLOW LENGTH(FEET) =    12.00   MANNING'S N =  0.030
  ESTIMATED PIPE DIAMETER(INCH) INCREASED TO 18.000
  DEPTH OF FLOW IN  18.0 INCH PIPE IS   5.2 INCHES
  PIPE-FLOW VELOCITY(FEET/SEC.) =   5.36
  ESTIMATED PIPE DIAMETER(INCH) =  18.00    NUMBER OF PIPES =   1
  PIPE-FLOW(CFS) =       2.27
  PIPE TRAVEL TIME(MIN.) =   0.04    Tc(MIN.) =    6.78
  LONGEST FLOWPATH FROM NODE    339.00 TO NODE    338.00 =     452.00 FEET.

****************************************************************************
  FLOW PROCESS FROM NODE    338.00 TO NODE    338.00 IS CODE =   1
----------------------------------------------------------------------------
  >>>>>DESIGNATE INDEPENDENT STREAM FOR CONFLUENCE<<<<<
============================================================================
  TOTAL NUMBER OF STREAMS =  2
  CONFLUENCE VALUES USED FOR INDEPENDENT STREAM  1 ARE:
  TIME OF CONCENTRATION(MIN.) =    6.78
  RAINFALL INTENSITY(INCH/HR) =   6.93
  TOTAL STREAM AREA(ACRES) =     0.46
  PEAK FLOW RATE(CFS) AT CONFLUENCE =      2.27

****************************************************************************
  FLOW PROCESS FROM NODE    342.00 TO NODE    343.00 IS CODE =  21
----------------------------------------------------------------------------
  >>>>>RATIONAL METHOD INITIAL SUBAREA ANALYSIS<<<<<
============================================================================
  *USER SPECIFIED(SUBAREA):
  USER-SPECIFIED RUNOFF COEFFICIENT = .7100
  S.C.S. CURVE NUMBER (AMC II) =   0
  INITIAL SUBAREA FLOW-LENGTH(FEET) =    70.00
  UPSTREAM ELEVATION(FEET) =    818.00
  DOWNSTREAM ELEVATION(FEET) =    817.00
  ELEVATION DIFFERENCE(FEET) =      1.00
  SUBAREA OVERLAND TIME OF FLOW(MIN.) =    5.215
   100 YEAR RAINFALL INTENSITY(INCH/HOUR) =  8.205
  SUBAREA RUNOFF(CFS) =      0.23
  TOTAL AREA(ACRES) =      0.04   TOTAL RUNOFF(CFS) =      0.23

****************************************************************************
  FLOW PROCESS FROM NODE    343.00 TO NODE    344.00 IS CODE =  62
----------------------------------------------------------------------------
  >>>>>COMPUTE STREET FLOW TRAVEL TIME THRU SUBAREA<<<<<
  >>>>>(STREET TABLE SECTION #  1 USED)<<<<<
============================================================================
```

```
  UPSTREAM ELEVATION(FEET) =  817.00  DOWNSTREAM ELEVATION(FEET) =  790.00
  STREET LENGTH(FEET) =   345.00   CURB HEIGHT(INCHES) =  4.0
  STREET HALFWIDTH(FEET) = 12.00

  DISTANCE FROM CROWN TO CROSSFALL GRADEBREAK(FEET) =   6.00
  INSIDE STREET CROSSFALL(DECIMAL) =  0.020
  OUTSIDE STREET CROSSFALL(DECIMAL)  =  0.020

  SPECIFIED NUMBER OF HALFSTREETS CARRYING RUNOFF =  1
  STREET PARKWAY CROSSFALL(DECIMAL)  =  0.020
  Manning's FRICTION FACTOR for Streetflow Section(curb-to-curb) =   0.0150
  Manning's FRICTION FACTOR for Back-of-Walk Flow Section =   0.0150

    **TRAVEL TIME COMPUTED USING ESTIMATED FLOW(CFS) =       0.62
    STREETFLOW MODEL RESULTS USING ESTIMATED FLOW:
    STREET FLOW DEPTH(FEET) =  0.10
    HALFSTREET FLOOD WIDTH(FEET) =    4.29
    AVERAGE FLOW VELOCITY(FEET/SEC.) =    3.35
    PRODUCT OF DEPTH&VELOCITY(FT*FT/SEC.) =    0.35
  STREET FLOW TRAVEL TIME(MIN.) =   1.72   Tc(MIN.) =    6.93
   100 YEAR RAINFALL INTENSITY(INCH/HOUR) =  6.830
  *USER SPECIFIED(SUBAREA):
  USER-SPECIFIED RUNOFF COEFFICIENT = .7100
  S.C.S. CURVE NUMBER (AMC II) =   0
  AREA-AVERAGE RUNOFF COEFFICIENT =  0.710
  SUBAREA AREA(ACRES) =    0.16      SUBAREA RUNOFF(CFS) =    0.78
  TOTAL AREA(ACRES) =        0.2        PEAK FLOW RATE(CFS) =       0.97

  END OF SUBAREA STREET FLOW HYDRAULICS:
  DEPTH(FEET) = 0.12   HALFSTREET FLOOD WIDTH(FEET) =   5.03
  FLOW VELOCITY(FEET/SEC.) =  3.81   DEPTH*VELOCITY(FT*FT/SEC.) =   0.45
  LONGEST FLOWPATH FROM NODE    342.00 TO NODE    344.00 =     415.00 FEET.

****************************************************************************
  FLOW PROCESS FROM NODE    344.00 TO NODE    338.00 IS CODE =  31
----------------------------------------------------------------------------
  >>>>>COMPUTE PIPE-FLOW TRAVEL TIME THRU SUBAREA<<<<<
  >>>>>USING COMPUTER-ESTIMATED PIPESIZE (NON-PRESSURE FLOW)<<<<<
============================================================================
  ELEVATION DATA: UPSTREAM(FEET) =   784.00  DOWNSTREAM(FEET) =   783.00
  FLOW LENGTH(FEET) =    12.00   MANNING'S N =  0.013
  ESTIMATED PIPE DIAMETER(INCH) INCREASED TO 18.000
  DEPTH OF FLOW IN  18.0 INCH PIPE IS   2.3 INCHES
  PIPE-FLOW VELOCITY(FEET/SEC.) =   7.53
  ESTIMATED PIPE DIAMETER(INCH) =  18.00    NUMBER OF PIPES =   1
  PIPE-FLOW(CFS) =       0.97
  PIPE TRAVEL TIME(MIN.) =   0.03    Tc(MIN.) =    6.96
  LONGEST FLOWPATH FROM NODE    342.00 TO NODE    338.00 =     427.00 FEET.

****************************************************************************
  FLOW PROCESS FROM NODE    338.00 TO NODE    338.00 IS CODE =   1
----------------------------------------------------------------------------
  >>>>>DESIGNATE INDEPENDENT STREAM FOR CONFLUENCE<<<<<
  >>>>>AND COMPUTE VARIOUS CONFLUENCED STREAM VALUES<<<<<
============================================================================
  TOTAL NUMBER OF STREAMS =  2
  CONFLUENCE VALUES USED FOR INDEPENDENT STREAM  2 ARE:
  TIME OF CONCENTRATION(MIN.) =    6.96
  RAINFALL INTENSITY(INCH/HR) =   6.81
  TOTAL STREAM AREA(ACRES) =     0.20
  PEAK FLOW RATE(CFS) AT CONFLUENCE =      0.97

  ** CONFLUENCE DATA **
```

```
  STREAM     RUNOFF       Tc      INTENSITY      AREA
  NUMBER      (CFS)     (MIN.)   (INCH/HOUR)    (ACRE)
      1        2.27     6.78        6.930          0.46
      2        0.97     6.96        6.813          0.20

  RAINFALL INTENSITY AND TIME OF CONCENTRATION RATIO
  CONFLUENCE FORMULA USED FOR  2 STREAMS.

  ** PEAK FLOW RATE TABLE **
  STREAM     RUNOFF      Tc      INTENSITY
  NUMBER      (CFS)    (MIN.)   (INCH/HOUR)
      1        3.22     6.78       6.930
      2        3.20     6.96       6.813

  COMPUTED CONFLUENCE ESTIMATES ARE AS FOLLOWS:
  PEAK FLOW RATE(CFS) =       3.22   Tc(MIN.) =    6.78
  TOTAL AREA(ACRES) =        0.7
  LONGEST FLOWPATH FROM NODE    339.00 TO NODE    338.00 =     452.00 FEET.

****************************************************************************
  FLOW PROCESS FROM NODE    338.00 TO NODE    345.00 IS CODE =  31
----------------------------------------------------------------------------
  >>>>>COMPUTE PIPE-FLOW TRAVEL TIME THRU SUBAREA<<<<<
  >>>>>USING COMPUTER-ESTIMATED PIPESIZE (NON-PRESSURE FLOW)<<<<<
============================================================================
  ELEVATION DATA: UPSTREAM(FEET) =   783.00  DOWNSTREAM(FEET) =   782.00
  FLOW LENGTH(FEET) =    55.00   MANNING'S N =  0.013
  ESTIMATED PIPE DIAMETER(INCH) INCREASED TO 18.000
  DEPTH OF FLOW IN  18.0 INCH PIPE IS   6.0 INCHES
  PIPE-FLOW VELOCITY(FEET/SEC.) =   6.24
  ESTIMATED PIPE DIAMETER(INCH) =  18.00    NUMBER OF PIPES =   1
  PIPE-FLOW(CFS) =       3.22
  PIPE TRAVEL TIME(MIN.) =   0.15    Tc(MIN.) =    6.92
  LONGEST FLOWPATH FROM NODE    339.00 TO NODE    345.00 =     507.00 FEET.

****************************************************************************
  FLOW PROCESS FROM NODE    345.00 TO NODE    345.00 IS CODE =  10
----------------------------------------------------------------------------
  >>>>>MAIN-STREAM MEMORY COPIED ONTO MEMORY BANK # 3 <<<<<
============================================================================

****************************************************************************
  FLOW PROCESS FROM NODE    346.00 TO NODE    347.00 IS CODE =  21
----------------------------------------------------------------------------
  >>>>>RATIONAL METHOD INITIAL SUBAREA ANALYSIS<<<<<
============================================================================
  *USER SPECIFIED(SUBAREA):
  USER-SPECIFIED RUNOFF COEFFICIENT = .7100
  S.C.S. CURVE NUMBER (AMC II) =   0
  INITIAL SUBAREA FLOW-LENGTH(FEET) =    70.00
  UPSTREAM ELEVATION(FEET) =    836.00
  DOWNSTREAM ELEVATION(FEET) =    835.00
  ELEVATION DIFFERENCE(FEET) =      1.00
  SUBAREA OVERLAND TIME OF FLOW(MIN.) =    5.215
   100 YEAR RAINFALL INTENSITY(INCH/HOUR) =  8.205
  SUBAREA RUNOFF(CFS) =      1.51
  TOTAL AREA(ACRES) =      0.26   TOTAL RUNOFF(CFS) =      1.51

****************************************************************************
  FLOW PROCESS FROM NODE    347.00 TO NODE    348.00 IS CODE =  62
----------------------------------------------------------------------------
  >>>>>COMPUTE STREET FLOW TRAVEL TIME THRU SUBAREA<<<<<
  >>>>>(STREET TABLE SECTION #  1 USED)<<<<<
```

```
==============================================================================
  UPSTREAM ELEVATION(FEET) =  835.00  DOWNSTREAM ELEVATION(FEET) =  820.00
  STREET LENGTH(FEET) =   350.00   CURB HEIGHT(INCHES) =  4.0
  STREET HALFWIDTH(FEET) = 12.00

  DISTANCE FROM CROWN TO CROSSFALL GRADEBREAK(FEET) =   6.00
  INSIDE STREET CROSSFALL(DECIMAL) =  0.020
  OUTSIDE STREET CROSSFALL(DECIMAL)  =  0.020

  SPECIFIED NUMBER OF HALFSTREETS CARRYING RUNOFF =  1
  STREET PARKWAY CROSSFALL(DECIMAL)  =  0.020
  Manning's FRICTION FACTOR for Streetflow Section(curb-to-curb) =   0.0150
  Manning's FRICTION FACTOR for Back-of-Walk Flow Section =   0.0150

    **TRAVEL TIME COMPUTED USING ESTIMATED FLOW(CFS) =       6.85
    STREETFLOW MODEL RESULTS USING ESTIMATED FLOW:
    STREET FLOW DEPTH(FEET) =  0.26
    HALFSTREET FLOOD WIDTH(FEET) =   11.86
    AVERAGE FLOW VELOCITY(FEET/SEC.) =    4.86
    PRODUCT OF DEPTH&VELOCITY(FT*FT/SEC.) =    1.24
  STREET FLOW TRAVEL TIME(MIN.) =   1.20   Tc(MIN.) =    6.41
   100 YEAR RAINFALL INTENSITY(INCH/HOUR) =  7.180
  *USER SPECIFIED(SUBAREA):
  USER-SPECIFIED RUNOFF COEFFICIENT = .7100
  S.C.S. CURVE NUMBER (AMC II) =   0
  AREA-AVERAGE RUNOFF COEFFICIENT =  0.710
  SUBAREA AREA(ACRES) =    2.09      SUBAREA RUNOFF(CFS) =   10.65
  TOTAL AREA(ACRES) =        2.3        PEAK FLOW RATE(CFS) =      11.98

  END OF SUBAREA STREET FLOW HYDRAULICS:
  DEPTH(FEET) = 0.26   HALFSTREET FLOOD WIDTH(FEET) =  12.00
  FLOW VELOCITY(FEET/SEC.) =  4.92   DEPTH*VELOCITY(FT*FT/SEC.) =   1.27
  LONGEST FLOWPATH FROM NODE    346.00 TO NODE    348.00 =     420.00 FEET.

****************************************************************************
  FLOW PROCESS FROM NODE    348.00 TO NODE    349.00 IS CODE =  31
----------------------------------------------------------------------------
  >>>>>COMPUTE PIPE-FLOW TRAVEL TIME THRU SUBAREA<<<<<
  >>>>>USING COMPUTER-ESTIMATED PIPESIZE (NON-PRESSURE FLOW)<<<<<
==============================================================================
  ELEVATION DATA: UPSTREAM(FEET) =   814.00  DOWNSTREAM(FEET) =   813.00
  FLOW LENGTH(FEET) =    65.00   MANNING'S N =  0.013
  DEPTH OF FLOW IN  18.0 INCH PIPE IS  14.3 INCHES
  PIPE-FLOW VELOCITY(FEET/SEC.) =   7.97
  ESTIMATED PIPE DIAMETER(INCH) =  18.00    NUMBER OF PIPES =   1
  PIPE-FLOW(CFS) =      11.98
  PIPE TRAVEL TIME(MIN.) =   0.14    Tc(MIN.) =    6.55
  LONGEST FLOWPATH FROM NODE    346.00 TO NODE    349.00 =     485.00 FEET.

****************************************************************************
  FLOW PROCESS FROM NODE    349.00 TO NODE    349.00 IS CODE =   1
----------------------------------------------------------------------------
  >>>>>DESIGNATE INDEPENDENT STREAM FOR CONFLUENCE<<<<<
==============================================================================
  TOTAL NUMBER OF STREAMS =  2
  CONFLUENCE VALUES USED FOR INDEPENDENT STREAM  1 ARE:
  TIME OF CONCENTRATION(MIN.) =    6.55
  RAINFALL INTENSITY(INCH/HR) =   7.08
  TOTAL STREAM AREA(ACRES) =     2.35
  PEAK FLOW RATE(CFS) AT CONFLUENCE =     11.98

****************************************************************************
  FLOW PROCESS FROM NODE    350.00 TO NODE    351.00 IS CODE =  21
```

```
----------------------------------------------------------------------------
  >>>>>RATIONAL METHOD INITIAL SUBAREA ANALYSIS<<<<<
============================================================================
  *USER SPECIFIED(SUBAREA):
  USER-SPECIFIED RUNOFF COEFFICIENT = .3500
  S.C.S. CURVE NUMBER (AMC II) =   0
  INITIAL SUBAREA FLOW-LENGTH(FEET) =    70.00
  UPSTREAM ELEVATION(FEET) =    882.00
  DOWNSTREAM ELEVATION(FEET) =    832.00
  ELEVATION DIFFERENCE(FEET) =     50.00
  SUBAREA OVERLAND TIME OF FLOW(MIN.) =    5.243
  WARNING: THE MAXIMUM OVERLAND FLOW SLOPE, 10.%, IS USED IN Tc CALCULATION!
   100 YEAR RAINFALL INTENSITY(INCH/HOUR) =  8.177
  SUBAREA RUNOFF(CFS) =      0.94
  TOTAL AREA(ACRES) =      0.33   TOTAL RUNOFF(CFS) =      0.94

****************************************************************************
  FLOW PROCESS FROM NODE    351.00 TO NODE    352.00 IS CODE =  62
----------------------------------------------------------------------------
  >>>>>COMPUTE STREET FLOW TRAVEL TIME THRU SUBAREA<<<<<
  >>>>>(STREET TABLE SECTION #  1 USED)<<<<<
============================================================================
  UPSTREAM ELEVATION(FEET) =  832.00  DOWNSTREAM ELEVATION(FEET) =  822.00
  STREET LENGTH(FEET) =   205.00   CURB HEIGHT(INCHES) =  4.0
  STREET HALFWIDTH(FEET) = 12.00

  DISTANCE FROM CROWN TO CROSSFALL GRADEBREAK(FEET) =   6.00
  INSIDE STREET CROSSFALL(DECIMAL) =  0.020
  OUTSIDE STREET CROSSFALL(DECIMAL)  =  0.020

  SPECIFIED NUMBER OF HALFSTREETS CARRYING RUNOFF =  1
  STREET PARKWAY CROSSFALL(DECIMAL)  =  0.020
  Manning's FRICTION FACTOR for Streetflow Section(curb-to-curb) =   0.0150
  Manning's FRICTION FACTOR for Back-of-Walk Flow Section =   0.0150

    **TRAVEL TIME COMPUTED USING ESTIMATED FLOW(CFS) =       3.87
    STREETFLOW MODEL RESULTS USING ESTIMATED FLOW:
    STREET FLOW DEPTH(FEET) =  0.20
    HALFSTREET FLOOD WIDTH(FEET) =    9.33
    AVERAGE FLOW VELOCITY(FEET/SEC.) =    4.44
    PRODUCT OF DEPTH&VELOCITY(FT*FT/SEC.) =    0.91
  STREET FLOW TRAVEL TIME(MIN.) =   0.77   Tc(MIN.) =    6.01
   100 YEAR RAINFALL INTENSITY(INCH/HOUR) =  7.486
  *USER SPECIFIED(SUBAREA):
  USER-SPECIFIED RUNOFF COEFFICIENT = .7100
  S.C.S. CURVE NUMBER (AMC II) =   0
  AREA-AVERAGE RUNOFF COEFFICIENT =  0.627
  SUBAREA AREA(ACRES) =    1.11      SUBAREA RUNOFF(CFS) =    5.90
  TOTAL AREA(ACRES) =        1.4        PEAK FLOW RATE(CFS) =       6.76

  END OF SUBAREA STREET FLOW HYDRAULICS:
  DEPTH(FEET) = 0.25   HALFSTREET FLOOD WIDTH(FEET) =  11.48
  FLOW VELOCITY(FEET/SEC.) =  5.12   DEPTH*VELOCITY(FT*FT/SEC.) =   1.27
  LONGEST FLOWPATH FROM NODE    350.00 TO NODE    352.00 =     275.00 FEET.

****************************************************************************
  FLOW PROCESS FROM NODE    352.00 TO NODE    349.00 IS CODE =  31
----------------------------------------------------------------------------
  >>>>>COMPUTE PIPE-FLOW TRAVEL TIME THRU SUBAREA<<<<<
  >>>>>USING COMPUTER-ESTIMATED PIPESIZE (NON-PRESSURE FLOW)<<<<<
============================================================================
  ELEVATION DATA: UPSTREAM(FEET) =   816.00  DOWNSTREAM(FEET) =   813.00
  FLOW LENGTH(FEET) =    23.00   MANNING'S N =  0.013
```

```
  ESTIMATED PIPE DIAMETER(INCH) INCREASED TO 18.000
  DEPTH OF FLOW IN  18.0 INCH PIPE IS   5.3 INCHES
  PIPE-FLOW VELOCITY(FEET/SEC.) =  15.63
  ESTIMATED PIPE DIAMETER(INCH) =  18.00    NUMBER OF PIPES =   1
  PIPE-FLOW(CFS) =       6.76
  PIPE TRAVEL TIME(MIN.) =   0.02    Tc(MIN.) =    6.04
  LONGEST FLOWPATH FROM NODE    350.00 TO NODE    349.00 =     298.00 FEET.

****************************************************************************
  FLOW PROCESS FROM NODE    349.00 TO NODE    349.00 IS CODE =   1
----------------------------------------------------------------------------
  >>>>>DESIGNATE INDEPENDENT STREAM FOR CONFLUENCE<<<<<
  >>>>>AND COMPUTE VARIOUS CONFLUENCED STREAM VALUES<<<<<
============================================================================
  TOTAL NUMBER OF STREAMS =  2
  CONFLUENCE VALUES USED FOR INDEPENDENT STREAM  2 ARE:
  TIME OF CONCENTRATION(MIN.) =    6.04
  RAINFALL INTENSITY(INCH/HR) =   7.47
  TOTAL STREAM AREA(ACRES) =     1.44
  PEAK FLOW RATE(CFS) AT CONFLUENCE =      6.76

  ** CONFLUENCE DATA **
  STREAM     RUNOFF       Tc      INTENSITY      AREA
  NUMBER      (CFS)     (MIN.)   (INCH/HOUR)    (ACRE)
      1       11.98     6.55        7.083          2.35
      2        6.76     6.04        7.466          1.44

  RAINFALL INTENSITY AND TIME OF CONCENTRATION RATIO
  CONFLUENCE FORMULA USED FOR  2 STREAMS.

  ** PEAK FLOW RATE TABLE **
  STREAM     RUNOFF      Tc      INTENSITY
  NUMBER      (CFS)    (MIN.)   (INCH/HOUR)
      1       17.81     6.04       7.466
      2       18.40     6.55       7.083

  COMPUTED CONFLUENCE ESTIMATES ARE AS FOLLOWS:
  PEAK FLOW RATE(CFS) =      18.40   Tc(MIN.) =    6.55
  TOTAL AREA(ACRES) =        3.8
  LONGEST FLOWPATH FROM NODE    346.00 TO NODE    349.00 =     485.00 FEET.

****************************************************************************
  FLOW PROCESS FROM NODE    349.00 TO NODE    353.00 IS CODE =  31
----------------------------------------------------------------------------
  >>>>>COMPUTE PIPE-FLOW TRAVEL TIME THRU SUBAREA<<<<<
  >>>>>USING COMPUTER-ESTIMATED PIPESIZE (NON-PRESSURE FLOW)<<<<<
============================================================================
  ELEVATION DATA: UPSTREAM(FEET) =   813.00  DOWNSTREAM(FEET) =   782.00
  FLOW LENGTH(FEET) =   380.00   MANNING'S N =  0.013
  DEPTH OF FLOW IN  18.0 INCH PIPE IS  10.5 INCHES
  PIPE-FLOW VELOCITY(FEET/SEC.) =  17.13
  ESTIMATED PIPE DIAMETER(INCH) =  18.00    NUMBER OF PIPES =   1
  PIPE-FLOW(CFS) =      18.40
  PIPE TRAVEL TIME(MIN.) =   0.37    Tc(MIN.) =    6.92
  LONGEST FLOWPATH FROM NODE    346.00 TO NODE    353.00 =     865.00 FEET.

****************************************************************************
  FLOW PROCESS FROM NODE    353.00 TO NODE    353.00 IS CODE =   1
----------------------------------------------------------------------------
  >>>>>DESIGNATE INDEPENDENT STREAM FOR CONFLUENCE<<<<<
============================================================================
  TOTAL NUMBER OF STREAMS =  2
  CONFLUENCE VALUES USED FOR INDEPENDENT STREAM  1 ARE:
```

```
  TIME OF CONCENTRATION(MIN.) =    6.92
  RAINFALL INTENSITY(INCH/HR) =   6.84
  TOTAL STREAM AREA(ACRES) =     3.79
  PEAK FLOW RATE(CFS) AT CONFLUENCE =     18.40

****************************************************************************
  FLOW PROCESS FROM NODE    354.00 TO NODE    355.00 IS CODE =  21
----------------------------------------------------------------------------
  >>>>>RATIONAL METHOD INITIAL SUBAREA ANALYSIS<<<<<
============================================================================
  *USER SPECIFIED(SUBAREA):
  USER-SPECIFIED RUNOFF COEFFICIENT = .7100
  S.C.S. CURVE NUMBER (AMC II) =   0
  INITIAL SUBAREA FLOW-LENGTH(FEET) =    70.00
  UPSTREAM ELEVATION(FEET) =    825.00
  DOWNSTREAM ELEVATION(FEET) =    813.00
  ELEVATION DIFFERENCE(FEET) =     12.00
  SUBAREA OVERLAND TIME OF FLOW(MIN.) =    2.726
  WARNING: THE MAXIMUM OVERLAND FLOW SLOPE, 10.%, IS USED IN Tc CALCULATION!
   100 YEAR RAINFALL INTENSITY(INCH/HOUR) =  8.431
  NOTE: RAINFALL INTENSITY IS BASED ON Tc = 5-MINUTE.
  SUBAREA RUNOFF(CFS) =      1.14
  TOTAL AREA(ACRES) =      0.19   TOTAL RUNOFF(CFS) =      1.14

****************************************************************************
  FLOW PROCESS FROM NODE    355.00 TO NODE    356.00 IS CODE =  62
----------------------------------------------------------------------------
  >>>>>COMPUTE STREET FLOW TRAVEL TIME THRU SUBAREA<<<<<
  >>>>>(STREET TABLE SECTION #  1 USED)<<<<<
============================================================================
  UPSTREAM ELEVATION(FEET) =  813.00  DOWNSTREAM ELEVATION(FEET) =  784.00
  STREET LENGTH(FEET) =   280.00   CURB HEIGHT(INCHES) =  4.0
  STREET HALFWIDTH(FEET) = 12.00

  DISTANCE FROM CROWN TO CROSSFALL GRADEBREAK(FEET) =   6.00
  INSIDE STREET CROSSFALL(DECIMAL) =  0.020
  OUTSIDE STREET CROSSFALL(DECIMAL)  =  0.020

  SPECIFIED NUMBER OF HALFSTREETS CARRYING RUNOFF =  1
  STREET PARKWAY CROSSFALL(DECIMAL)  =  0.020
  Manning's FRICTION FACTOR for Streetflow Section(curb-to-curb) =   0.0150
  Manning's FRICTION FACTOR for Back-of-Walk Flow Section =   0.0150

    **TRAVEL TIME COMPUTED USING ESTIMATED FLOW(CFS) =       6.02
    STREETFLOW MODEL RESULTS USING ESTIMATED FLOW:
    STREET FLOW DEPTH(FEET) =  0.21
    HALFSTREET FLOOD WIDTH(FEET) =    9.52
    AVERAGE FLOW VELOCITY(FEET/SEC.) =    6.63
    PRODUCT OF DEPTH&VELOCITY(FT*FT/SEC.) =    1.38
  STREET FLOW TRAVEL TIME(MIN.) =   0.70   Tc(MIN.) =    3.43
   100 YEAR RAINFALL INTENSITY(INCH/HOUR) =  8.431
  NOTE: RAINFALL INTENSITY IS BASED ON Tc = 5-MINUTE.
  *USER SPECIFIED(SUBAREA):
  USER-SPECIFIED RUNOFF COEFFICIENT = .7100
  S.C.S. CURVE NUMBER (AMC II) =   0
  AREA-AVERAGE RUNOFF COEFFICIENT =  0.710
  SUBAREA AREA(ACRES) =    1.63      SUBAREA RUNOFF(CFS) =    9.76
  TOTAL AREA(ACRES) =        1.8        PEAK FLOW RATE(CFS) =      10.89

  END OF SUBAREA STREET FLOW HYDRAULICS:
  DEPTH(FEET) = 0.26   HALFSTREET FLOOD WIDTH(FEET) =  11.95
  FLOW VELOCITY(FEET/SEC.) =  7.62   DEPTH*VELOCITY(FT*FT/SEC.) =   1.96
  LONGEST FLOWPATH FROM NODE    354.00 TO NODE    356.00 =     350.00 FEET.
```

```
****************************************************************************
  FLOW PROCESS FROM NODE    356.00 TO NODE    353.00 IS CODE =  31
----------------------------------------------------------------------------
  >>>>>COMPUTE PIPE-FLOW TRAVEL TIME THRU SUBAREA<<<<<
  >>>>>USING COMPUTER-ESTIMATED PIPESIZE (NON-PRESSURE FLOW)<<<<<
============================================================================
  ELEVATION DATA: UPSTREAM(FEET) =   784.00  DOWNSTREAM(FEET) =   783.00
  FLOW LENGTH(FEET) =    23.00   MANNING'S N =  0.013
  ESTIMATED PIPE DIAMETER(INCH) INCREASED TO 18.000
  DEPTH OF FLOW IN  18.0 INCH PIPE IS   9.3 INCHES
  PIPE-FLOW VELOCITY(FEET/SEC.) =  11.90
  ESTIMATED PIPE DIAMETER(INCH) =  18.00    NUMBER OF PIPES =   1
  PIPE-FLOW(CFS) =      10.89
  PIPE TRAVEL TIME(MIN.) =   0.03    Tc(MIN.) =    3.46
  LONGEST FLOWPATH FROM NODE    354.00 TO NODE    353.00 =     373.00 FEET.

****************************************************************************
  FLOW PROCESS FROM NODE    353.00 TO NODE    353.00 IS CODE =   1
----------------------------------------------------------------------------
  >>>>>DESIGNATE INDEPENDENT STREAM FOR CONFLUENCE<<<<<
  >>>>>AND COMPUTE VARIOUS CONFLUENCED STREAM VALUES<<<<<
============================================================================
  TOTAL NUMBER OF STREAMS =  2
  CONFLUENCE VALUES USED FOR INDEPENDENT STREAM  2 ARE:
  TIME OF CONCENTRATION(MIN.) =    3.46
  RAINFALL INTENSITY(INCH/HR) =   8.43
  TOTAL STREAM AREA(ACRES) =     1.82
  PEAK FLOW RATE(CFS) AT CONFLUENCE =     10.89

  ** CONFLUENCE DATA **
  STREAM     RUNOFF       Tc      INTENSITY      AREA
  NUMBER      (CFS)     (MIN.)   (INCH/HOUR)    (ACRE)
      1       18.40     6.92        6.837          3.79
      2       10.89     3.46        8.431          1.82

  RAINFALL INTENSITY AND TIME OF CONCENTRATION RATIO
  CONFLUENCE FORMULA USED FOR  2 STREAMS.

  ** PEAK FLOW RATE TABLE **
  STREAM     RUNOFF      Tc      INTENSITY
  NUMBER      (CFS)    (MIN.)   (INCH/HOUR)
      1       25.81     3.46       8.431
      2       27.23     6.92       6.837

  COMPUTED CONFLUENCE ESTIMATES ARE AS FOLLOWS:
  PEAK FLOW RATE(CFS) =      27.23   Tc(MIN.) =    6.92
  TOTAL AREA(ACRES) =        5.6
  LONGEST FLOWPATH FROM NODE    346.00 TO NODE    353.00 =     865.00 FEET.

****************************************************************************
  FLOW PROCESS FROM NODE    353.00 TO NODE    345.00 IS CODE =  31
----------------------------------------------------------------------------
  >>>>>COMPUTE PIPE-FLOW TRAVEL TIME THRU SUBAREA<<<<<
  >>>>>USING COMPUTER-ESTIMATED PIPESIZE (NON-PRESSURE FLOW)<<<<<
============================================================================
  ELEVATION DATA: UPSTREAM(FEET) =   783.00  DOWNSTREAM(FEET) =   782.00
  FLOW LENGTH(FEET) =    35.00   MANNING'S N =  0.013
  DEPTH OF FLOW IN  24.0 INCH PIPE IS  15.5 INCHES
  PIPE-FLOW VELOCITY(FEET/SEC.) =  12.67
  ESTIMATED PIPE DIAMETER(INCH) =  24.00    NUMBER OF PIPES =   1
  PIPE-FLOW(CFS) =      27.23
  PIPE TRAVEL TIME(MIN.) =   0.05    Tc(MIN.) =    6.97
```

```
  LONGEST FLOWPATH FROM NODE    346.00 TO NODE    345.00 =     900.00 FEET.

****************************************************************************
  FLOW PROCESS FROM NODE    345.00 TO NODE    345.00 IS CODE =  11
----------------------------------------------------------------------------
  >>>>>CONFLUENCE MEMORY BANK # 3 WITH THE MAIN-STREAM MEMORY<<<<<
============================================================================

  ** MAIN STREAM CONFLUENCE DATA **
  STREAM     RUNOFF      Tc      INTENSITY     AREA
  NUMBER      (CFS)    (MIN.)   (INCH/HOUR)   (ACRE)
      1       27.23     6.97       6.808        5.61
  LONGEST FLOWPATH FROM NODE    346.00 TO NODE    345.00 =     900.00 FEET.

  ** MEMORY BANK #  3 CONFLUENCE DATA **
  STREAM     RUNOFF      Tc      INTENSITY     AREA
  NUMBER      (CFS)    (MIN.)   (INCH/HOUR)   (ACRE)
      1        3.22     6.92       6.835        0.66
  LONGEST FLOWPATH FROM NODE    339.00 TO NODE    345.00 =     507.00 FEET.

  ** PEAK FLOW RATE TABLE **
  STREAM    RUNOFF       Tc      INTENSITY
  NUMBER     (CFS)     (MIN.)   (INCH/HOUR)
      1      30.28      6.92        6.835
      2      30.44      6.97        6.808

  COMPUTED CONFLUENCE ESTIMATES ARE AS FOLLOWS:
  PEAK FLOW RATE(CFS) =      30.44   Tc(MIN.) =    6.97
  TOTAL AREA(ACRES) =        6.3

****************************************************************************
  FLOW PROCESS FROM NODE    345.00 TO NODE    345.00 IS CODE =  12
----------------------------------------------------------------------------
  >>>>>CLEAR MEMORY BANK # 3 <<<<<
============================================================================

****************************************************************************
  FLOW PROCESS FROM NODE    345.00 TO NODE    357.00 IS CODE =  31
----------------------------------------------------------------------------
  >>>>>COMPUTE PIPE-FLOW TRAVEL TIME THRU SUBAREA<<<<<
  >>>>>USING COMPUTER-ESTIMATED PIPESIZE (NON-PRESSURE FLOW)<<<<<
============================================================================
  ELEVATION DATA: UPSTREAM(FEET) =   782.00  DOWNSTREAM(FEET) =   743.00
  FLOW LENGTH(FEET) =   480.00   MANNING'S N =  0.013
  DEPTH OF FLOW IN  21.0 INCH PIPE IS  13.1 INCHES
  PIPE-FLOW VELOCITY(FEET/SEC.) =  19.33
  ESTIMATED PIPE DIAMETER(INCH) =  21.00    NUMBER OF PIPES =   1
  PIPE-FLOW(CFS) =      30.44
  PIPE TRAVEL TIME(MIN.) =   0.41    Tc(MIN.) =    7.38
  LONGEST FLOWPATH FROM NODE    346.00 TO NODE    357.00 =    1380.00 FEET.

****************************************************************************
  FLOW PROCESS FROM NODE    357.00 TO NODE    357.00 IS CODE =   1
----------------------------------------------------------------------------
  >>>>>DESIGNATE INDEPENDENT STREAM FOR CONFLUENCE<<<<<
============================================================================
  TOTAL NUMBER OF STREAMS =  2
  CONFLUENCE VALUES USED FOR INDEPENDENT STREAM  1 ARE:
  TIME OF CONCENTRATION(MIN.) =    7.38
  RAINFALL INTENSITY(INCH/HR) =   6.56
  TOTAL STREAM AREA(ACRES) =     6.27
  PEAK FLOW RATE(CFS) AT CONFLUENCE =     30.44
```

```
****************************************************************************
  FLOW PROCESS FROM NODE    361.00 TO NODE    362.00 IS CODE =  21
----------------------------------------------------------------------------
  >>>>>RATIONAL METHOD INITIAL SUBAREA ANALYSIS<<<<<
============================================================================
  *USER SPECIFIED(SUBAREA):
  USER-SPECIFIED RUNOFF COEFFICIENT = .7100
  S.C.S. CURVE NUMBER (AMC II) =   0
  INITIAL SUBAREA FLOW-LENGTH(FEET) =   145.00
  UPSTREAM ELEVATION(FEET) =    786.00
  DOWNSTREAM ELEVATION(FEET) =    774.00
  ELEVATION DIFFERENCE(FEET) =     12.00
  SUBAREA OVERLAND TIME OF FLOW(MIN.) =    3.471
  WARNING: INITIAL SUBAREA FLOW PATH LENGTH IS GREATER THAN
           THE MAXIMUM OVERLAND FLOW LENGTH =   100.00
           (Reference: Table 3-1B of Hydrology Manual)
           THE MAXIMUM OVERLAND FLOW LENGTH IS USED IN Tc CALCULATION!
   100 YEAR RAINFALL INTENSITY(INCH/HOUR) =  8.431
  NOTE: RAINFALL INTENSITY IS BASED ON Tc = 5-MINUTE.
  SUBAREA RUNOFF(CFS) =      0.54
  TOTAL AREA(ACRES) =      0.09   TOTAL RUNOFF(CFS) =      0.54

****************************************************************************
  FLOW PROCESS FROM NODE    362.00 TO NODE    363.00 IS CODE =  62
----------------------------------------------------------------------------
  >>>>>COMPUTE STREET FLOW TRAVEL TIME THRU SUBAREA<<<<<
  >>>>>(STREET TABLE SECTION #  1 USED)<<<<<
============================================================================
  UPSTREAM ELEVATION(FEET) =  774.00  DOWNSTREAM ELEVATION(FEET) =  750.00
  STREET LENGTH(FEET) =   350.00   CURB HEIGHT(INCHES) =  4.0
  STREET HALFWIDTH(FEET) = 12.00

  DISTANCE FROM CROWN TO CROSSFALL GRADEBREAK(FEET) =   6.00
  INSIDE STREET CROSSFALL(DECIMAL) =  0.020
  OUTSIDE STREET CROSSFALL(DECIMAL)  =  0.020

  SPECIFIED NUMBER OF HALFSTREETS CARRYING RUNOFF =  1
  STREET PARKWAY CROSSFALL(DECIMAL)  =  0.020
  Manning's FRICTION FACTOR for Streetflow Section(curb-to-curb) =   0.0150
  Manning's FRICTION FACTOR for Back-of-Walk Flow Section =   0.0150

    **TRAVEL TIME COMPUTED USING ESTIMATED FLOW(CFS) =       3.86
    STREETFLOW MODEL RESULTS USING ESTIMATED FLOW:
    STREET FLOW DEPTH(FEET) =  0.19
    HALFSTREET FLOOD WIDTH(FEET) =    8.77
    AVERAGE FLOW VELOCITY(FEET/SEC.) =    5.02
    PRODUCT OF DEPTH&VELOCITY(FT*FT/SEC.) =    0.97
  STREET FLOW TRAVEL TIME(MIN.) =   1.16   Tc(MIN.) =    4.63
   100 YEAR RAINFALL INTENSITY(INCH/HOUR) =  8.431
  NOTE: RAINFALL INTENSITY IS BASED ON Tc = 5-MINUTE.
  *USER SPECIFIED(SUBAREA):
  USER-SPECIFIED RUNOFF COEFFICIENT = .7100
  S.C.S. CURVE NUMBER (AMC II) =   0
  AREA-AVERAGE RUNOFF COEFFICIENT =  0.710
  SUBAREA AREA(ACRES) =    1.11      SUBAREA RUNOFF(CFS) =    6.64
  TOTAL AREA(ACRES) =        1.2        PEAK FLOW RATE(CFS) =       7.18

  END OF SUBAREA STREET FLOW HYDRAULICS:
  DEPTH(FEET) = 0.24   HALFSTREET FLOOD WIDTH(FEET) =  11.02
  FLOW VELOCITY(FEET/SEC.) =  5.91   DEPTH*VELOCITY(FT*FT/SEC.) =   1.41
  LONGEST FLOWPATH FROM NODE    361.00 TO NODE    363.00 =     495.00 FEET.

****************************************************************************
```

```
  FLOW PROCESS FROM NODE    363.00 TO NODE    357.00 IS CODE =  31
----------------------------------------------------------------------------
  >>>>>COMPUTE PIPE-FLOW TRAVEL TIME THRU SUBAREA<<<<<
  >>>>>USING COMPUTER-ESTIMATED PIPESIZE (NON-PRESSURE FLOW)<<<<<
============================================================================
  ELEVATION DATA: UPSTREAM(FEET) =   744.00  DOWNSTREAM(FEET) =   743.00
  FLOW LENGTH(FEET) =    23.00   MANNING'S N =  0.013
  ESTIMATED PIPE DIAMETER(INCH) INCREASED TO 18.000
  DEPTH OF FLOW IN  18.0 INCH PIPE IS   7.3 INCHES
  PIPE-FLOW VELOCITY(FEET/SEC.) =  10.68
  ESTIMATED PIPE DIAMETER(INCH) =  18.00    NUMBER OF PIPES =   1
  PIPE-FLOW(CFS) =       7.18
  PIPE TRAVEL TIME(MIN.) =   0.04    Tc(MIN.) =    4.67
  LONGEST FLOWPATH FROM NODE    361.00 TO NODE    357.00 =     518.00 FEET.

****************************************************************************
  FLOW PROCESS FROM NODE    357.00 TO NODE    357.00 IS CODE =   1
----------------------------------------------------------------------------
  >>>>>DESIGNATE INDEPENDENT STREAM FOR CONFLUENCE<<<<<
  >>>>>AND COMPUTE VARIOUS CONFLUENCED STREAM VALUES<<<<<
============================================================================
  TOTAL NUMBER OF STREAMS =  2
  CONFLUENCE VALUES USED FOR INDEPENDENT STREAM  2 ARE:
  TIME OF CONCENTRATION(MIN.) =    4.67
  RAINFALL INTENSITY(INCH/HR) =   8.43
  TOTAL STREAM AREA(ACRES) =     1.20
  PEAK FLOW RATE(CFS) AT CONFLUENCE =      7.18

  ** CONFLUENCE DATA **
  STREAM     RUNOFF       Tc      INTENSITY      AREA
  NUMBER      (CFS)     (MIN.)   (INCH/HOUR)    (ACRE)
      1       30.44     7.38        6.559          6.27
      2        7.18     4.67        8.431          1.20

  RAINFALL INTENSITY AND TIME OF CONCENTRATION RATIO
  CONFLUENCE FORMULA USED FOR  2 STREAMS.

  ** PEAK FLOW RATE TABLE **
  STREAM     RUNOFF      Tc      INTENSITY
  NUMBER      (CFS)    (MIN.)   (INCH/HOUR)
      1       26.44     4.67       8.431
      2       36.02     7.38       6.559

  COMPUTED CONFLUENCE ESTIMATES ARE AS FOLLOWS:
  PEAK FLOW RATE(CFS) =      36.02   Tc(MIN.) =    7.38
  TOTAL AREA(ACRES) =        7.5
  LONGEST FLOWPATH FROM NODE    346.00 TO NODE    357.00 =    1380.00 FEET.

****************************************************************************
  FLOW PROCESS FROM NODE    357.00 TO NODE    360.00 IS CODE =  31
----------------------------------------------------------------------------
  >>>>>COMPUTE PIPE-FLOW TRAVEL TIME THRU SUBAREA<<<<<
  >>>>>USING COMPUTER-ESTIMATED PIPESIZE (NON-PRESSURE FLOW)<<<<<
============================================================================
  ELEVATION DATA: UPSTREAM(FEET) =   743.00  DOWNSTREAM(FEET) =   742.00
  FLOW LENGTH(FEET) =     2.00   MANNING'S N =  0.013
  ESTIMATED PIPE DIAMETER(INCH) INCREASED TO 18.000
  DEPTH OF FLOW IN  18.0 INCH PIPE IS   9.1 INCHES
  PIPE-FLOW VELOCITY(FEET/SEC.) =  40.10
  ESTIMATED PIPE DIAMETER(INCH) =  18.00    NUMBER OF PIPES =   1
  PIPE-FLOW(CFS) =      36.02
  PIPE TRAVEL TIME(MIN.) =   0.00    Tc(MIN.) =    7.38
  LONGEST FLOWPATH FROM NODE    346.00 TO NODE    360.00 =    1382.00 FEET.
```

```
****************************************************************************
  FLOW PROCESS FROM NODE    360.00 TO NODE    360.00 IS CODE =   1
----------------------------------------------------------------------------
  >>>>>DESIGNATE INDEPENDENT STREAM FOR CONFLUENCE<<<<<
============================================================================
  TOTAL NUMBER OF STREAMS =  2
  CONFLUENCE VALUES USED FOR INDEPENDENT STREAM  1 ARE:
  TIME OF CONCENTRATION(MIN.) =    7.38
  RAINFALL INTENSITY(INCH/HR) =   6.56
  TOTAL STREAM AREA(ACRES) =     7.47
  PEAK FLOW RATE(CFS) AT CONFLUENCE =     36.02

****************************************************************************
  FLOW PROCESS FROM NODE    358.00 TO NODE    359.00 IS CODE =  21
----------------------------------------------------------------------------
  >>>>>RATIONAL METHOD INITIAL SUBAREA ANALYSIS<<<<<
============================================================================
  *USER SPECIFIED(SUBAREA):
  USER-SPECIFIED RUNOFF COEFFICIENT = .7100
  S.C.S. CURVE NUMBER (AMC II) =   0
  INITIAL SUBAREA FLOW-LENGTH(FEET) =    70.00
  UPSTREAM ELEVATION(FEET) =    790.00
  DOWNSTREAM ELEVATION(FEET) =    780.00
  ELEVATION DIFFERENCE(FEET) =     10.00
  SUBAREA OVERLAND TIME OF FLOW(MIN.) =    2.726
  WARNING: THE MAXIMUM OVERLAND FLOW SLOPE, 10.%, IS USED IN Tc CALCULATION!
   100 YEAR RAINFALL INTENSITY(INCH/HOUR) =  8.431
  NOTE: RAINFALL INTENSITY IS BASED ON Tc = 5-MINUTE.
  SUBAREA RUNOFF(CFS) =      0.96
  TOTAL AREA(ACRES) =      0.16   TOTAL RUNOFF(CFS) =      0.96

****************************************************************************
  FLOW PROCESS FROM NODE    359.00 TO NODE    360.00 IS CODE =  62
----------------------------------------------------------------------------
  >>>>>COMPUTE STREET FLOW TRAVEL TIME THRU SUBAREA<<<<<
  >>>>>(STREET TABLE SECTION #  1 USED)<<<<<
============================================================================
  UPSTREAM ELEVATION(FEET) =  780.00  DOWNSTREAM ELEVATION(FEET) =  750.00
  STREET LENGTH(FEET) =   375.00   CURB HEIGHT(INCHES) =  4.0
  STREET HALFWIDTH(FEET) = 12.00

  DISTANCE FROM CROWN TO CROSSFALL GRADEBREAK(FEET) =   6.00
  INSIDE STREET CROSSFALL(DECIMAL) =  0.020
  OUTSIDE STREET CROSSFALL(DECIMAL)  =  0.020

  SPECIFIED NUMBER OF HALFSTREETS CARRYING RUNOFF =  1
  STREET PARKWAY CROSSFALL(DECIMAL)  =  0.020
  Manning's FRICTION FACTOR for Streetflow Section(curb-to-curb) =   0.0150
  Manning's FRICTION FACTOR for Back-of-Walk Flow Section =   0.0150

    **TRAVEL TIME COMPUTED USING ESTIMATED FLOW(CFS) =       1.98
    STREETFLOW MODEL RESULTS USING ESTIMATED FLOW:
    STREET FLOW DEPTH(FEET) =  0.15
    HALFSTREET FLOOD WIDTH(FEET) =    6.61
    AVERAGE FLOW VELOCITY(FEET/SEC.) =    4.51
    PRODUCT OF DEPTH&VELOCITY(FT*FT/SEC.) =    0.68
  STREET FLOW TRAVEL TIME(MIN.) =   1.39   Tc(MIN.) =    4.11
   100 YEAR RAINFALL INTENSITY(INCH/HOUR) =  8.431
  NOTE: RAINFALL INTENSITY IS BASED ON Tc = 5-MINUTE.
  *USER SPECIFIED(SUBAREA):
  USER-SPECIFIED RUNOFF COEFFICIENT = .7100
  S.C.S. CURVE NUMBER (AMC II) =   0
```

```
  AREA-AVERAGE RUNOFF COEFFICIENT =  0.710
  SUBAREA AREA(ACRES) =    0.34      SUBAREA RUNOFF(CFS) =    2.04
  TOTAL AREA(ACRES) =        0.5        PEAK FLOW RATE(CFS) =       2.99

  END OF SUBAREA STREET FLOW HYDRAULICS:
  DEPTH(FEET) = 0.17   HALFSTREET FLOOD WIDTH(FEET) =   7.73
  FLOW VELOCITY(FEET/SEC.) =  4.99   DEPTH*VELOCITY(FT*FT/SEC.) =   0.86
  LONGEST FLOWPATH FROM NODE    358.00 TO NODE    360.00 =     445.00 FEET.

****************************************************************************
  FLOW PROCESS FROM NODE    360.00 TO NODE    360.00 IS CODE =   1
----------------------------------------------------------------------------
  >>>>>DESIGNATE INDEPENDENT STREAM FOR CONFLUENCE<<<<<
  >>>>>AND COMPUTE VARIOUS CONFLUENCED STREAM VALUES<<<<<
============================================================================
  TOTAL NUMBER OF STREAMS =  2
  CONFLUENCE VALUES USED FOR INDEPENDENT STREAM  2 ARE:
  TIME OF CONCENTRATION(MIN.) =    4.11
  RAINFALL INTENSITY(INCH/HR) =   8.43
  TOTAL STREAM AREA(ACRES) =     0.50
  PEAK FLOW RATE(CFS) AT CONFLUENCE =      2.99

  ** CONFLUENCE DATA **
  STREAM     RUNOFF       Tc      INTENSITY      AREA
  NUMBER      (CFS)     (MIN.)   (INCH/HOUR)    (ACRE)
      1       36.02     7.38        6.558         7.47
      2        2.99     4.11        8.431         0.50

  RAINFALL INTENSITY AND TIME OF CONCENTRATION RATIO
  CONFLUENCE FORMULA USED FOR  2 STREAMS.

  ** PEAK FLOW RATE TABLE **
  STREAM     RUNOFF      Tc      INTENSITY
  NUMBER      (CFS)    (MIN.)   (INCH/HOUR)
      1       31.02     4.11       8.431
      2       38.35     7.38       6.558

  COMPUTED CONFLUENCE ESTIMATES ARE AS FOLLOWS:
  PEAK FLOW RATE(CFS) =      38.35   Tc(MIN.) =    7.38
  TOTAL AREA(ACRES) =        8.0
  LONGEST FLOWPATH FROM NODE    346.00 TO NODE    360.00 =    1382.00 FEET.

****************************************************************************
  FLOW PROCESS FROM NODE    360.00 TO NODE    305.50 IS CODE =  31
----------------------------------------------------------------------------
  >>>>>COMPUTE PIPE-FLOW TRAVEL TIME THRU SUBAREA<<<<<
  >>>>>USING COMPUTER-ESTIMATED PIPESIZE (NON-PRESSURE FLOW)<<<<<
============================================================================
  ELEVATION DATA: UPSTREAM(FEET) =   744.00  DOWNSTREAM(FEET) =   743.00
  FLOW LENGTH(FEET) =    40.00   MANNING'S N =  0.013
  DEPTH OF FLOW IN  27.0 INCH PIPE IS  18.7 INCHES
  PIPE-FLOW VELOCITY(FEET/SEC.) =  13.05
  ESTIMATED PIPE DIAMETER(INCH) =  27.00    NUMBER OF PIPES =   1
  PIPE-FLOW(CFS) =      38.35
  PIPE TRAVEL TIME(MIN.) =   0.05    Tc(MIN.) =    7.43
  LONGEST FLOWPATH FROM NODE    346.00 TO NODE    305.50 =    1422.00 FEET.

****************************************************************************
  FLOW PROCESS FROM NODE    305.50 TO NODE    305.50 IS CODE =   1
----------------------------------------------------------------------------
  >>>>>DESIGNATE INDEPENDENT STREAM FOR CONFLUENCE<<<<<
============================================================================
  TOTAL NUMBER OF STREAMS =  2
```

```
  CONFLUENCE VALUES USED FOR INDEPENDENT STREAM  1 ARE:
  TIME OF CONCENTRATION(MIN.) =    7.43
  RAINFALL INTENSITY(INCH/HR) =   6.53
  TOTAL STREAM AREA(ACRES) =     7.97
  PEAK FLOW RATE(CFS) AT CONFLUENCE =     38.35

****************************************************************************
  FLOW PROCESS FROM NODE    306.00 TO NODE    307.00 IS CODE =  21
----------------------------------------------------------------------------
  >>>>>RATIONAL METHOD INITIAL SUBAREA ANALYSIS<<<<<
============================================================================
  *USER SPECIFIED(SUBAREA):
  USER-SPECIFIED RUNOFF COEFFICIENT = .3500
  S.C.S. CURVE NUMBER (AMC II) =   0
  INITIAL SUBAREA FLOW-LENGTH(FEET) =    70.00
  UPSTREAM ELEVATION(FEET) =    834.00
  DOWNSTREAM ELEVATION(FEET) =    780.00
  ELEVATION DIFFERENCE(FEET) =     54.00
  SUBAREA OVERLAND TIME OF FLOW(MIN.) =    5.243
  WARNING: THE MAXIMUM OVERLAND FLOW SLOPE, 10.%, IS USED IN Tc CALCULATION!
   100 YEAR RAINFALL INTENSITY(INCH/HOUR) =  8.177
  SUBAREA RUNOFF(CFS) =      1.29
  TOTAL AREA(ACRES) =      0.45   TOTAL RUNOFF(CFS) =      1.29

****************************************************************************
  FLOW PROCESS FROM NODE    307.00 TO NODE    305.50 IS CODE =  51
----------------------------------------------------------------------------
  >>>>>COMPUTE TRAPEZOIDAL CHANNEL FLOW<<<<<
  >>>>>TRAVELTIME THRU SUBAREA (EXISTING ELEMENT)<<<<<
============================================================================
  ELEVATION DATA: UPSTREAM(FEET) =    780.00  DOWNSTREAM(FEET) =    743.00
  CHANNEL LENGTH THRU SUBAREA(FEET) =   250.00   CHANNEL SLOPE =  0.1480
  CHANNEL BASE(FEET) =    3.00   "Z" FACTOR =   2.000
  MANNING'S FACTOR = 0.030   MAXIMUM DEPTH(FEET) =  10.00
   100 YEAR RAINFALL INTENSITY(INCH/HOUR) =  7.559
  *USER SPECIFIED(SUBAREA):
  USER-SPECIFIED RUNOFF COEFFICIENT = .3500
  S.C.S. CURVE NUMBER (AMC II) =   0
  TRAVEL TIME COMPUTED USING ESTIMATED FLOW(CFS) =       4.56
  TRAVEL TIME THRU SUBAREA BASED ON VELOCITY(FEET/SEC.) =   6.13
  AVERAGE FLOW DEPTH(FEET) =   0.22   TRAVEL TIME(MIN.) =   0.68
  Tc(MIN.) =    5.92
  SUBAREA AREA(ACRES) =     2.47       SUBAREA RUNOFF(CFS) =    6.53
  AREA-AVERAGE RUNOFF COEFFICIENT =  0.350
  TOTAL AREA(ACRES) =        2.9         PEAK FLOW RATE(CFS) =       7.73

  END OF SUBAREA CHANNEL FLOW HYDRAULICS:
  DEPTH(FEET) =  0.29   FLOW VELOCITY(FEET/SEC.) =   7.36
  LONGEST FLOWPATH FROM NODE    306.00 TO NODE    305.50 =     320.00 FEET.

****************************************************************************
  FLOW PROCESS FROM NODE    305.50 TO NODE    305.50 IS CODE =   1
----------------------------------------------------------------------------
  >>>>>DESIGNATE INDEPENDENT STREAM FOR CONFLUENCE<<<<<
  >>>>>AND COMPUTE VARIOUS CONFLUENCED STREAM VALUES<<<<<
============================================================================
  TOTAL NUMBER OF STREAMS =  2
  CONFLUENCE VALUES USED FOR INDEPENDENT STREAM  2 ARE:
  TIME OF CONCENTRATION(MIN.) =    5.92
  RAINFALL INTENSITY(INCH/HR) =   7.56
  TOTAL STREAM AREA(ACRES) =     2.92
  PEAK FLOW RATE(CFS) AT CONFLUENCE =      7.73
```

```
** CONFLUENCE DATA **
STREAM     RUNOFF       Tc      INTENSITY      AREA
NUMBER      (CFS)     (MIN.)   (INCH/HOUR)    (ACRE)
    1       38.35     7.43        6.529          7.97
    2        7.73     5.92        7.559          2.92

RAINFALL INTENSITY AND TIME OF CONCENTRATION RATIO
CONFLUENCE FORMULA USED FOR  2 STREAMS.

** PEAK FLOW RATE TABLE **
STREAM     RUNOFF      Tc      INTENSITY
NUMBER      (CFS)    (MIN.)   (INCH/HOUR)
    1       40.85     5.92       7.559
    2       45.02     7.43       6.529

COMPUTED CONFLUENCE ESTIMATES ARE AS FOLLOWS:
PEAK FLOW RATE(CFS) =      45.02   Tc(MIN.) =    7.43
TOTAL AREA(ACRES) =       10.9
LONGEST FLOWPATH FROM NODE    346.00 TO NODE    305.50 =    1422.00 FEET.

****************************************************************************
FLOW PROCESS FROM NODE    305.50 TO NODE    305.00 IS CODE =  31
----------------------------------------------------------------------------
>>>>>COMPUTE PIPE-FLOW TRAVEL TIME THRU SUBAREA<<<<<
>>>>>USING COMPUTER-ESTIMATED PIPESIZE (NON-PRESSURE FLOW)<<<<<
============================================================================
ELEVATION DATA: UPSTREAM(FEET) =   743.00  DOWNSTREAM(FEET) =   742.00
FLOW LENGTH(FEET) =    32.00   MANNING'S N =  0.013
DEPTH OF FLOW IN  27.0 INCH PIPE IS  19.4 INCHES
PIPE-FLOW VELOCITY(FEET/SEC.) =  14.71
ESTIMATED PIPE DIAMETER(INCH) =  27.00    NUMBER OF PIPES =   1
PIPE-FLOW(CFS) =      45.02
PIPE TRAVEL TIME(MIN.) =   0.04    Tc(MIN.) =    7.47
LONGEST FLOWPATH FROM NODE    346.00 TO NODE    305.00 =    1454.00 FEET.

****************************************************************************
FLOW PROCESS FROM NODE    305.00 TO NODE    305.00 IS CODE =  11
----------------------------------------------------------------------------
>>>>>CONFLUENCE MEMORY BANK # 1 WITH THE MAIN-STREAM MEMORY<<<<<
============================================================================

** MAIN STREAM CONFLUENCE DATA **
STREAM     RUNOFF      Tc      INTENSITY     AREA
NUMBER      (CFS)    (MIN.)   (INCH/HOUR)   (ACRE)
    1       45.02     7.47       6.509       10.89
LONGEST FLOWPATH FROM NODE    346.00 TO NODE    305.00 =    1454.00 FEET.

** MEMORY BANK #  1 CONFLUENCE DATA **
STREAM     RUNOFF      Tc      INTENSITY     AREA
NUMBER      (CFS)    (MIN.)   (INCH/HOUR)   (ACRE)
    1      103.74     9.86       5.442       54.45
LONGEST FLOWPATH FROM NODE    300.00 TO NODE    305.00 =    2960.00 FEET.

** PEAK FLOW RATE TABLE **
STREAM    RUNOFF       Tc      INTENSITY
NUMBER     (CFS)     (MIN.)   (INCH/HOUR)
    1     123.62       7.47        6.509
    2     141.38       9.86        5.442

COMPUTED CONFLUENCE ESTIMATES ARE AS FOLLOWS:
PEAK FLOW RATE(CFS) =     141.38   Tc(MIN.) =    9.86
TOTAL AREA(ACRES) =       65.3
```

```
****************************************************************************
  FLOW PROCESS FROM NODE    305.00 TO NODE    305.00 IS CODE =  12
----------------------------------------------------------------------------
  >>>>>CLEAR MEMORY BANK # 1 <<<<<
============================================================================

****************************************************************************
  FLOW PROCESS FROM NODE    305.00 TO NODE    308.00 IS CODE =  31
----------------------------------------------------------------------------
  >>>>>COMPUTE PIPE-FLOW TRAVEL TIME THRU SUBAREA<<<<<
  >>>>>USING COMPUTER-ESTIMATED PIPESIZE (NON-PRESSURE FLOW)<<<<<
============================================================================
  ELEVATION DATA: UPSTREAM(FEET) =   742.00  DOWNSTREAM(FEET) =   736.00
  FLOW LENGTH(FEET) =   208.00   MANNING'S N =  0.013
  DEPTH OF FLOW IN  42.0 INCH PIPE IS  30.4 INCHES
  PIPE-FLOW VELOCITY(FEET/SEC.) =  18.99
  ESTIMATED PIPE DIAMETER(INCH) =  42.00    NUMBER OF PIPES =   1
  PIPE-FLOW(CFS) =     141.38
  PIPE TRAVEL TIME(MIN.) =   0.18    Tc(MIN.) =   10.04
  LONGEST FLOWPATH FROM NODE    300.00 TO NODE    308.00 =    3168.00 FEET.

****************************************************************************
  FLOW PROCESS FROM NODE    308.00 TO NODE    308.00 IS CODE =  10
----------------------------------------------------------------------------
  >>>>>MAIN-STREAM MEMORY COPIED ONTO MEMORY BANK # 1 <<<<<
============================================================================

****************************************************************************
  FLOW PROCESS FROM NODE    368.00 TO NODE    369.00 IS CODE =  21
----------------------------------------------------------------------------
  >>>>>RATIONAL METHOD INITIAL SUBAREA ANALYSIS<<<<<
============================================================================
  *USER SPECIFIED(SUBAREA):
  USER-SPECIFIED RUNOFF COEFFICIENT = .7100
  S.C.S. CURVE NUMBER (AMC II) =   0
  INITIAL SUBAREA FLOW-LENGTH(FEET) =    70.00
  UPSTREAM ELEVATION(FEET) =    757.00
  DOWNSTREAM ELEVATION(FEET) =    749.00
  ELEVATION DIFFERENCE(FEET) =      8.00
  SUBAREA OVERLAND TIME OF FLOW(MIN.) =    2.726
  WARNING: THE MAXIMUM OVERLAND FLOW SLOPE, 10.%, IS USED IN Tc CALCULATION!
   100 YEAR RAINFALL INTENSITY(INCH/HOUR) =  8.431
  NOTE: RAINFALL INTENSITY IS BASED ON Tc = 5-MINUTE.
  SUBAREA RUNOFF(CFS) =      1.50
  TOTAL AREA(ACRES) =      0.25   TOTAL RUNOFF(CFS) =      1.50

****************************************************************************
  FLOW PROCESS FROM NODE    369.00 TO NODE    370.00 IS CODE =  62
----------------------------------------------------------------------------
  >>>>>COMPUTE STREET FLOW TRAVEL TIME THRU SUBAREA<<<<<
  >>>>>(STREET TABLE SECTION #  1 USED)<<<<<
============================================================================
  UPSTREAM ELEVATION(FEET) =  749.00  DOWNSTREAM ELEVATION(FEET) =  746.00
  STREET LENGTH(FEET) =   225.00   CURB HEIGHT(INCHES) =  4.0
  STREET HALFWIDTH(FEET) = 12.00

  DISTANCE FROM CROWN TO CROSSFALL GRADEBREAK(FEET) =   6.00
  INSIDE STREET CROSSFALL(DECIMAL) =  0.020
  OUTSIDE STREET CROSSFALL(DECIMAL)  =  0.020

  SPECIFIED NUMBER OF HALFSTREETS CARRYING RUNOFF =  1
  STREET PARKWAY CROSSFALL(DECIMAL)  =  0.020
  Manning's FRICTION FACTOR for Streetflow Section(curb-to-curb) =   0.0150
```

```
  Manning's FRICTION FACTOR for Back-of-Walk Flow Section =   0.0150

    **TRAVEL TIME COMPUTED USING ESTIMATED FLOW(CFS) =       3.23
    STREETFLOW MODEL RESULTS USING ESTIMATED FLOW:
    STREET FLOW DEPTH(FEET) =  0.24
    HALFSTREET FLOOD WIDTH(FEET) =   11.11
    AVERAGE FLOW VELOCITY(FEET/SEC.) =    2.62
    PRODUCT OF DEPTH&VELOCITY(FT*FT/SEC.) =    0.63
  STREET FLOW TRAVEL TIME(MIN.) =   1.43   Tc(MIN.) =    4.16
   100 YEAR RAINFALL INTENSITY(INCH/HOUR) =  8.431
  NOTE: RAINFALL INTENSITY IS BASED ON Tc = 5-MINUTE.
  *USER SPECIFIED(SUBAREA):
  USER-SPECIFIED RUNOFF COEFFICIENT = .7100
  S.C.S. CURVE NUMBER (AMC II) =   0
  AREA-AVERAGE RUNOFF COEFFICIENT =  0.710
  SUBAREA AREA(ACRES) =    0.58      SUBAREA RUNOFF(CFS) =    3.47
  TOTAL AREA(ACRES) =        0.8        PEAK FLOW RATE(CFS) =       4.97

  END OF SUBAREA STREET FLOW HYDRAULICS:
  DEPTH(FEET) = 0.26   HALFSTREET FLOOD WIDTH(FEET) =  12.00
  FLOW VELOCITY(FEET/SEC.) =  2.74   DEPTH*VELOCITY(FT*FT/SEC.) =   0.71
  LONGEST FLOWPATH FROM NODE    368.00 TO NODE    370.00 =     295.00 FEET.

****************************************************************************
  FLOW PROCESS FROM NODE    370.00 TO NODE    364.00 IS CODE =  31
----------------------------------------------------------------------------
  >>>>>COMPUTE PIPE-FLOW TRAVEL TIME THRU SUBAREA<<<<<
  >>>>>USING COMPUTER-ESTIMATED PIPESIZE (NON-PRESSURE FLOW)<<<<<
============================================================================
  ELEVATION DATA: UPSTREAM(FEET) =   740.00  DOWNSTREAM(FEET) =   735.00
  FLOW LENGTH(FEET) =    20.00   MANNING'S N =  0.012
  ESTIMATED PIPE DIAMETER(INCH) INCREASED TO 18.000
  DEPTH OF FLOW IN  18.0 INCH PIPE IS   3.7 INCHES
  PIPE-FLOW VELOCITY(FEET/SEC.) =  19.06
  ESTIMATED PIPE DIAMETER(INCH) =  18.00    NUMBER OF PIPES =   1
  PIPE-FLOW(CFS) =       4.97
  PIPE TRAVEL TIME(MIN.) =   0.02    Tc(MIN.) =    4.18
  LONGEST FLOWPATH FROM NODE    368.00 TO NODE    364.00 =     315.00 FEET.

****************************************************************************
  FLOW PROCESS FROM NODE    364.00 TO NODE    364.00 IS CODE =   1
----------------------------------------------------------------------------
  >>>>>DESIGNATE INDEPENDENT STREAM FOR CONFLUENCE<<<<<
============================================================================
  TOTAL NUMBER OF STREAMS =  2
  CONFLUENCE VALUES USED FOR INDEPENDENT STREAM  1 ARE:
  TIME OF CONCENTRATION(MIN.) =    4.18
  RAINFALL INTENSITY(INCH/HR) =   8.43
  TOTAL STREAM AREA(ACRES) =     0.83
  PEAK FLOW RATE(CFS) AT CONFLUENCE =      4.97

****************************************************************************
  FLOW PROCESS FROM NODE    365.00 TO NODE    366.00 IS CODE =  21
----------------------------------------------------------------------------
  >>>>>RATIONAL METHOD INITIAL SUBAREA ANALYSIS<<<<<
============================================================================
  *USER SPECIFIED(SUBAREA):
  USER-SPECIFIED RUNOFF COEFFICIENT = .7100
  S.C.S. CURVE NUMBER (AMC II) =   0
  INITIAL SUBAREA FLOW-LENGTH(FEET) =    70.00
  UPSTREAM ELEVATION(FEET) =    754.00
  DOWNSTREAM ELEVATION(FEET) =    749.00
  ELEVATION DIFFERENCE(FEET) =      5.00
```

```
  SUBAREA OVERLAND TIME OF FLOW(MIN.) =    3.050
   100 YEAR RAINFALL INTENSITY(INCH/HOUR) =  8.431
  NOTE: RAINFALL INTENSITY IS BASED ON Tc = 5-MINUTE.
  SUBAREA RUNOFF(CFS) =      0.60
  TOTAL AREA(ACRES) =      0.10   TOTAL RUNOFF(CFS) =      0.60

****************************************************************************
  FLOW PROCESS FROM NODE    366.00 TO NODE    367.00 IS CODE =  62
----------------------------------------------------------------------------
  >>>>>COMPUTE STREET FLOW TRAVEL TIME THRU SUBAREA<<<<<
  >>>>>(STREET TABLE SECTION #  1 USED)<<<<<
============================================================================
  UPSTREAM ELEVATION(FEET) =  749.00  DOWNSTREAM ELEVATION(FEET) =  746.00
  STREET LENGTH(FEET) =   230.00   CURB HEIGHT(INCHES) =  4.0
  STREET HALFWIDTH(FEET) = 12.00

  DISTANCE FROM CROWN TO CROSSFALL GRADEBREAK(FEET) =   6.00
  INSIDE STREET CROSSFALL(DECIMAL) =  0.020
  OUTSIDE STREET CROSSFALL(DECIMAL)  =  0.020

  SPECIFIED NUMBER OF HALFSTREETS CARRYING RUNOFF =  1
  STREET PARKWAY CROSSFALL(DECIMAL)  =  0.020
  Manning's FRICTION FACTOR for Streetflow Section(curb-to-curb) =   0.0150
  Manning's FRICTION FACTOR for Back-of-Walk Flow Section =   0.0150

    **TRAVEL TIME COMPUTED USING ESTIMATED FLOW(CFS) =       2.04
    STREETFLOW MODEL RESULTS USING ESTIMATED FLOW:
    STREET FLOW DEPTH(FEET) =  0.21
    HALFSTREET FLOOD WIDTH(FEET) =    9.42
    AVERAGE FLOW VELOCITY(FEET/SEC.) =    2.29
    PRODUCT OF DEPTH&VELOCITY(FT*FT/SEC.) =    0.47
  STREET FLOW TRAVEL TIME(MIN.) =   1.67   Tc(MIN.) =    4.72
   100 YEAR RAINFALL INTENSITY(INCH/HOUR) =  8.431
  NOTE: RAINFALL INTENSITY IS BASED ON Tc = 5-MINUTE.
  *USER SPECIFIED(SUBAREA):
  USER-SPECIFIED RUNOFF COEFFICIENT = .7100
  S.C.S. CURVE NUMBER (AMC II) =   0
  AREA-AVERAGE RUNOFF COEFFICIENT =  0.710
  SUBAREA AREA(ACRES) =    0.48      SUBAREA RUNOFF(CFS) =    2.87
  TOTAL AREA(ACRES) =        0.6        PEAK FLOW RATE(CFS) =       3.47

  END OF SUBAREA STREET FLOW HYDRAULICS:
  DEPTH(FEET) = 0.25   HALFSTREET FLOOD WIDTH(FEET) =  11.48
  FLOW VELOCITY(FEET/SEC.) =  2.63   DEPTH*VELOCITY(FT*FT/SEC.) =   0.65
  LONGEST FLOWPATH FROM NODE    365.00 TO NODE    367.00 =     300.00 FEET.

****************************************************************************
  FLOW PROCESS FROM NODE    367.00 TO NODE    364.00 IS CODE =  31
----------------------------------------------------------------------------
  >>>>>COMPUTE PIPE-FLOW TRAVEL TIME THRU SUBAREA<<<<<
  >>>>>USING COMPUTER-ESTIMATED PIPESIZE (NON-PRESSURE FLOW)<<<<<
============================================================================
  ELEVATION DATA: UPSTREAM(FEET) =   740.00  DOWNSTREAM(FEET) =   735.00
  FLOW LENGTH(FEET) =     3.00   MANNING'S N =  0.013
  ESTIMATED PIPE DIAMETER(INCH) INCREASED TO 18.000
  DEPTH OF FLOW IN  18.0 INCH PIPE IS   2.0 INCHES
  PIPE-FLOW VELOCITY(FEET/SEC.) =  31.58
  ESTIMATED PIPE DIAMETER(INCH) =  18.00    NUMBER OF PIPES =   1
  PIPE-FLOW(CFS) =       3.47
  PIPE TRAVEL TIME(MIN.) =   0.00    Tc(MIN.) =    4.73
  LONGEST FLOWPATH FROM NODE    365.00 TO NODE    364.00 =     303.00 FEET.

****************************************************************************
```

```
  FLOW PROCESS FROM NODE    364.00 TO NODE    364.00 IS CODE =   1
----------------------------------------------------------------------------
  >>>>>DESIGNATE INDEPENDENT STREAM FOR CONFLUENCE<<<<<
  >>>>>AND COMPUTE VARIOUS CONFLUENCED STREAM VALUES<<<<<
============================================================================
  TOTAL NUMBER OF STREAMS =  2
  CONFLUENCE VALUES USED FOR INDEPENDENT STREAM  2 ARE:
  TIME OF CONCENTRATION(MIN.) =    4.73
  RAINFALL INTENSITY(INCH/HR) =   8.43
  TOTAL STREAM AREA(ACRES) =     0.58
  PEAK FLOW RATE(CFS) AT CONFLUENCE =      3.47

  ** CONFLUENCE DATA **
  STREAM     RUNOFF       Tc      INTENSITY      AREA
  NUMBER      (CFS)     (MIN.)   (INCH/HOUR)    (ACRE)
      1        4.97     4.18        8.431          0.83
      2        3.47     4.73        8.431          0.58

  RAINFALL INTENSITY AND TIME OF CONCENTRATION RATIO
  CONFLUENCE FORMULA USED FOR  2 STREAMS.

  ** PEAK FLOW RATE TABLE **
  STREAM     RUNOFF      Tc      INTENSITY
  NUMBER      (CFS)    (MIN.)   (INCH/HOUR)
      1        8.04     4.18       8.431
      2        8.44     4.73       8.431

  COMPUTED CONFLUENCE ESTIMATES ARE AS FOLLOWS:
  PEAK FLOW RATE(CFS) =       8.44   Tc(MIN.) =    4.73
  TOTAL AREA(ACRES) =        1.4
  LONGEST FLOWPATH FROM NODE    368.00 TO NODE    364.00 =     315.00 FEET.

****************************************************************************
  FLOW PROCESS FROM NODE    364.00 TO NODE    364.00 IS CODE =  10
----------------------------------------------------------------------------
  >>>>>MAIN-STREAM MEMORY COPIED ONTO MEMORY BANK # 3 <<<<<
============================================================================

****************************************************************************
  FLOW PROCESS FROM NODE    372.00 TO NODE    373.00 IS CODE =  21
----------------------------------------------------------------------------
  >>>>>RATIONAL METHOD INITIAL SUBAREA ANALYSIS<<<<<
============================================================================
  *USER SPECIFIED(SUBAREA):
  USER-SPECIFIED RUNOFF COEFFICIENT = .7100
  S.C.S. CURVE NUMBER (AMC II) =   0
  INITIAL SUBAREA FLOW-LENGTH(FEET) =    70.00
  UPSTREAM ELEVATION(FEET) =    760.00
  DOWNSTREAM ELEVATION(FEET) =    755.00
  ELEVATION DIFFERENCE(FEET) =      5.00
  SUBAREA OVERLAND TIME OF FLOW(MIN.) =    3.050
   100 YEAR RAINFALL INTENSITY(INCH/HOUR) =  8.431
  NOTE: RAINFALL INTENSITY IS BASED ON Tc = 5-MINUTE.
  SUBAREA RUNOFF(CFS) =      1.50
  TOTAL AREA(ACRES) =      0.25   TOTAL RUNOFF(CFS) =      1.50

****************************************************************************
  FLOW PROCESS FROM NODE    373.00 TO NODE    374.00 IS CODE =  62
----------------------------------------------------------------------------
  >>>>>COMPUTE STREET FLOW TRAVEL TIME THRU SUBAREA<<<<<
  >>>>>(STREET TABLE SECTION #  1 USED)<<<<<
============================================================================
  UPSTREAM ELEVATION(FEET) =  755.00  DOWNSTREAM ELEVATION(FEET) =  745.00
```

```
  STREET LENGTH(FEET) =   203.00   CURB HEIGHT(INCHES) =  4.0
  STREET HALFWIDTH(FEET) = 12.00

  DISTANCE FROM CROWN TO CROSSFALL GRADEBREAK(FEET) =   6.00
  INSIDE STREET CROSSFALL(DECIMAL) =  0.020
  OUTSIDE STREET CROSSFALL(DECIMAL)  =  0.020

  SPECIFIED NUMBER OF HALFSTREETS CARRYING RUNOFF =  1
  STREET PARKWAY CROSSFALL(DECIMAL)  =  0.020
  Manning's FRICTION FACTOR for Streetflow Section(curb-to-curb) =   0.0150
  Manning's FRICTION FACTOR for Back-of-Walk Flow Section =   0.0150

    **TRAVEL TIME COMPUTED USING ESTIMATED FLOW(CFS) =       6.17
    STREETFLOW MODEL RESULTS USING ESTIMATED FLOW:
    STREET FLOW DEPTH(FEET) =  0.24
    HALFSTREET FLOOD WIDTH(FEET) =   11.11
    AVERAGE FLOW VELOCITY(FEET/SEC.) =    4.99
    PRODUCT OF DEPTH&VELOCITY(FT*FT/SEC.) =    1.20
  STREET FLOW TRAVEL TIME(MIN.) =   0.68   Tc(MIN.) =    3.73
   100 YEAR RAINFALL INTENSITY(INCH/HOUR) =  8.431
  NOTE: RAINFALL INTENSITY IS BASED ON Tc = 5-MINUTE.
  *USER SPECIFIED(SUBAREA):
  USER-SPECIFIED RUNOFF COEFFICIENT = .7100
  S.C.S. CURVE NUMBER (AMC II) =   0
  AREA-AVERAGE RUNOFF COEFFICIENT =  0.710
  SUBAREA AREA(ACRES) =    1.56      SUBAREA RUNOFF(CFS) =    9.34
  TOTAL AREA(ACRES) =        1.8        PEAK FLOW RATE(CFS) =      10.83

  END OF SUBAREA STREET FLOW HYDRAULICS:
  DEPTH(FEET) = 0.26   HALFSTREET FLOOD WIDTH(FEET) =  12.00
  FLOW VELOCITY(FEET/SEC.) =  5.27   DEPTH*VELOCITY(FT*FT/SEC.) =   1.36
  LONGEST FLOWPATH FROM NODE    372.00 TO NODE    374.00 =     273.00 FEET.

****************************************************************************
  FLOW PROCESS FROM NODE    374.00 TO NODE    375.00 IS CODE =  31
----------------------------------------------------------------------------
  >>>>>COMPUTE PIPE-FLOW TRAVEL TIME THRU SUBAREA<<<<<
  >>>>>USING COMPUTER-ESTIMATED PIPESIZE (NON-PRESSURE FLOW)<<<<<
============================================================================
  ELEVATION DATA: UPSTREAM(FEET) =   739.00  DOWNSTREAM(FEET) =   738.00
  FLOW LENGTH(FEET) =     3.00   MANNING'S N =  0.012
  ESTIMATED PIPE DIAMETER(INCH) INCREASED TO 18.000
  DEPTH OF FLOW IN  18.0 INCH PIPE IS   5.1 INCHES
  PIPE-FLOW VELOCITY(FEET/SEC.) =  26.46
  ESTIMATED PIPE DIAMETER(INCH) =  18.00    NUMBER OF PIPES =   1
  PIPE-FLOW(CFS) =      10.83
  PIPE TRAVEL TIME(MIN.) =   0.00    Tc(MIN.) =    3.73
  LONGEST FLOWPATH FROM NODE    372.00 TO NODE    375.00 =     276.00 FEET.

****************************************************************************
  FLOW PROCESS FROM NODE    375.00 TO NODE    375.00 IS CODE =   1
----------------------------------------------------------------------------
  >>>>>DESIGNATE INDEPENDENT STREAM FOR CONFLUENCE<<<<<
============================================================================
  TOTAL NUMBER OF STREAMS =  2
  CONFLUENCE VALUES USED FOR INDEPENDENT STREAM  1 ARE:
  TIME OF CONCENTRATION(MIN.) =    3.73
  RAINFALL INTENSITY(INCH/HR) =   8.43
  TOTAL STREAM AREA(ACRES) =     1.81
  PEAK FLOW RATE(CFS) AT CONFLUENCE =     10.83

****************************************************************************
  FLOW PROCESS FROM NODE    376.00 TO NODE    377.00 IS CODE =  21
```

```
----------------------------------------------------------------------------
  >>>>>RATIONAL METHOD INITIAL SUBAREA ANALYSIS<<<<<
============================================================================
  *USER SPECIFIED(SUBAREA):
  USER-SPECIFIED RUNOFF COEFFICIENT = .7100
  S.C.S. CURVE NUMBER (AMC II) =   0
  INITIAL SUBAREA FLOW-LENGTH(FEET) =    70.00
  UPSTREAM ELEVATION(FEET) =    762.00
  DOWNSTREAM ELEVATION(FEET) =    755.00
  ELEVATION DIFFERENCE(FEET) =      7.00
  SUBAREA OVERLAND TIME OF FLOW(MIN.) =    2.726
  WARNING: THE MAXIMUM OVERLAND FLOW SLOPE, 10.%, IS USED IN Tc CALCULATION!
   100 YEAR RAINFALL INTENSITY(INCH/HOUR) =  8.431
  NOTE: RAINFALL INTENSITY IS BASED ON Tc = 5-MINUTE.
  SUBAREA RUNOFF(CFS) =      1.20
  TOTAL AREA(ACRES) =      0.20   TOTAL RUNOFF(CFS) =      1.20

****************************************************************************
  FLOW PROCESS FROM NODE    377.00 TO NODE    378.00 IS CODE =  62
----------------------------------------------------------------------------
  >>>>>COMPUTE STREET FLOW TRAVEL TIME THRU SUBAREA<<<<<
  >>>>>(STREET TABLE SECTION #  1 USED)<<<<<
============================================================================
  UPSTREAM ELEVATION(FEET) =  755.00  DOWNSTREAM ELEVATION(FEET) =  745.00
  STREET LENGTH(FEET) =   210.00   CURB HEIGHT(INCHES) =  4.0
  STREET HALFWIDTH(FEET) = 12.00

  DISTANCE FROM CROWN TO CROSSFALL GRADEBREAK(FEET) =   6.00
  INSIDE STREET CROSSFALL(DECIMAL) =  0.020
  OUTSIDE STREET CROSSFALL(DECIMAL)  =  0.020

  SPECIFIED NUMBER OF HALFSTREETS CARRYING RUNOFF =  1
  STREET PARKWAY CROSSFALL(DECIMAL)  =  0.020
  Manning's FRICTION FACTOR for Streetflow Section(curb-to-curb) =   0.0150
  Manning's FRICTION FACTOR for Back-of-Walk Flow Section =   0.0150

    **TRAVEL TIME COMPUTED USING ESTIMATED FLOW(CFS) =       6.11
    STREETFLOW MODEL RESULTS USING ESTIMATED FLOW:
    STREET FLOW DEPTH(FEET) =  0.24
    HALFSTREET FLOOD WIDTH(FEET) =   11.11
    AVERAGE FLOW VELOCITY(FEET/SEC.) =    4.94
    PRODUCT OF DEPTH&VELOCITY(FT*FT/SEC.) =    1.19
  STREET FLOW TRAVEL TIME(MIN.) =   0.71   Tc(MIN.) =    3.43
   100 YEAR RAINFALL INTENSITY(INCH/HOUR) =  8.431
  NOTE: RAINFALL INTENSITY IS BASED ON Tc = 5-MINUTE.
  *USER SPECIFIED(SUBAREA):
  USER-SPECIFIED RUNOFF COEFFICIENT = .7100
  S.C.S. CURVE NUMBER (AMC II) =   0
  AREA-AVERAGE RUNOFF COEFFICIENT =  0.710
  SUBAREA AREA(ACRES) =    1.64      SUBAREA RUNOFF(CFS) =    9.82
  TOTAL AREA(ACRES) =        1.8        PEAK FLOW RATE(CFS) =      11.01

  END OF SUBAREA STREET FLOW HYDRAULICS:
  DEPTH(FEET) = 0.26   HALFSTREET FLOOD WIDTH(FEET) =  12.00
  FLOW VELOCITY(FEET/SEC.) =  5.18   DEPTH*VELOCITY(FT*FT/SEC.) =   1.34
  LONGEST FLOWPATH FROM NODE    376.00 TO NODE    378.00 =     280.00 FEET.

****************************************************************************
  FLOW PROCESS FROM NODE    378.00 TO NODE    375.00 IS CODE =  31
----------------------------------------------------------------------------
  >>>>>COMPUTE PIPE-FLOW TRAVEL TIME THRU SUBAREA<<<<<
  >>>>>USING COMPUTER-ESTIMATED PIPESIZE (NON-PRESSURE FLOW)<<<<<
============================================================================
```

```
  ELEVATION DATA: UPSTREAM(FEET) =   739.00  DOWNSTREAM(FEET) =   738.00
  FLOW LENGTH(FEET) =    21.00   MANNING'S N =  0.012
  ESTIMATED PIPE DIAMETER(INCH) INCREASED TO 18.000
  DEPTH OF FLOW IN  18.0 INCH PIPE IS   8.7 INCHES
  PIPE-FLOW VELOCITY(FEET/SEC.) =  13.11
  ESTIMATED PIPE DIAMETER(INCH) =  18.00    NUMBER OF PIPES =   1
  PIPE-FLOW(CFS) =      11.01
  PIPE TRAVEL TIME(MIN.) =   0.03    Tc(MIN.) =    3.46
  LONGEST FLOWPATH FROM NODE    376.00 TO NODE    375.00 =     301.00 FEET.

****************************************************************************
  FLOW PROCESS FROM NODE    375.00 TO NODE    375.00 IS CODE =   1
----------------------------------------------------------------------------
  >>>>>DESIGNATE INDEPENDENT STREAM FOR CONFLUENCE<<<<<
  >>>>>AND COMPUTE VARIOUS CONFLUENCED STREAM VALUES<<<<<
============================================================================
  TOTAL NUMBER OF STREAMS =  2
  CONFLUENCE VALUES USED FOR INDEPENDENT STREAM  2 ARE:
  TIME OF CONCENTRATION(MIN.) =    3.46
  RAINFALL INTENSITY(INCH/HR) =   8.43
  TOTAL STREAM AREA(ACRES) =     1.84
  PEAK FLOW RATE(CFS) AT CONFLUENCE =     11.01

  ** CONFLUENCE DATA **
  STREAM     RUNOFF       Tc      INTENSITY      AREA
  NUMBER      (CFS)     (MIN.)   (INCH/HOUR)    (ACRE)
      1       10.83     3.73        8.431         1.81
      2       11.01     3.46        8.431         1.84

  RAINFALL INTENSITY AND TIME OF CONCENTRATION RATIO
  CONFLUENCE FORMULA USED FOR  2 STREAMS.

  ** PEAK FLOW RATE TABLE **
  STREAM     RUNOFF      Tc      INTENSITY
  NUMBER      (CFS)    (MIN.)   (INCH/HOUR)
      1       21.07     3.46       8.431
      2       21.85     3.73       8.431

  COMPUTED CONFLUENCE ESTIMATES ARE AS FOLLOWS:
  PEAK FLOW RATE(CFS) =      21.85   Tc(MIN.) =    3.73
  TOTAL AREA(ACRES) =        3.7
  LONGEST FLOWPATH FROM NODE    376.00 TO NODE    375.00 =     301.00 FEET.

****************************************************************************
  FLOW PROCESS FROM NODE    375.00 TO NODE    364.00 IS CODE =  31
----------------------------------------------------------------------------
  >>>>>COMPUTE PIPE-FLOW TRAVEL TIME THRU SUBAREA<<<<<
  >>>>>USING COMPUTER-ESTIMATED PIPESIZE (NON-PRESSURE FLOW)<<<<<
============================================================================
  ELEVATION DATA: UPSTREAM(FEET) =   738.00  DOWNSTREAM(FEET) =   735.00
  FLOW LENGTH(FEET) =   275.00   MANNING'S N =  0.012
  DEPTH OF FLOW IN  24.0 INCH PIPE IS  17.8 INCHES
  PIPE-FLOW VELOCITY(FEET/SEC.) =   8.75
  ESTIMATED PIPE DIAMETER(INCH) =  24.00    NUMBER OF PIPES =   1
  PIPE-FLOW(CFS) =      21.85
  PIPE TRAVEL TIME(MIN.) =   0.52    Tc(MIN.) =    4.25
  LONGEST FLOWPATH FROM NODE    376.00 TO NODE    364.00 =     576.00 FEET.

****************************************************************************
  FLOW PROCESS FROM NODE    364.00 TO NODE    364.00 IS CODE =  11
----------------------------------------------------------------------------
  >>>>>CONFLUENCE MEMORY BANK # 3 WITH THE MAIN-STREAM MEMORY<<<<<
============================================================================
```

```
  ** MAIN STREAM CONFLUENCE DATA **
  STREAM     RUNOFF      Tc      INTENSITY     AREA
  NUMBER      (CFS)    (MIN.)   (INCH/HOUR)   (ACRE)
      1       21.85     4.25       8.431        3.65
  LONGEST FLOWPATH FROM NODE    376.00 TO NODE    364.00 =     576.00 FEET.

  ** MEMORY BANK #  3 CONFLUENCE DATA **
  STREAM     RUNOFF      Tc      INTENSITY     AREA
  NUMBER      (CFS)    (MIN.)   (INCH/HOUR)   (ACRE)
      1        8.44     4.73       8.431        1.41
  LONGEST FLOWPATH FROM NODE    368.00 TO NODE    364.00 =     315.00 FEET.

  ** PEAK FLOW RATE TABLE **
  STREAM    RUNOFF       Tc      INTENSITY
  NUMBER     (CFS)     (MIN.)   (INCH/HOUR)
      1      29.45       4.25        8.431
      2      30.29       4.73        8.431

  COMPUTED CONFLUENCE ESTIMATES ARE AS FOLLOWS:
  PEAK FLOW RATE(CFS) =      30.29   Tc(MIN.) =    4.73
  TOTAL AREA(ACRES) =        5.1

****************************************************************************
  FLOW PROCESS FROM NODE    364.00 TO NODE    364.00 IS CODE =  12
----------------------------------------------------------------------------
  >>>>>CLEAR MEMORY BANK # 3 <<<<<
============================================================================

****************************************************************************
  FLOW PROCESS FROM NODE    364.00 TO NODE    371.00 IS CODE =  31
----------------------------------------------------------------------------
  >>>>>COMPUTE PIPE-FLOW TRAVEL TIME THRU SUBAREA<<<<<
  >>>>>USING COMPUTER-ESTIMATED PIPESIZE (NON-PRESSURE FLOW)<<<<<
============================================================================
  ELEVATION DATA: UPSTREAM(FEET) =   735.00  DOWNSTREAM(FEET) =   734.00
  FLOW LENGTH(FEET) =    50.00   MANNING'S N =  0.012
  DEPTH OF FLOW IN  24.0 INCH PIPE IS  18.2 INCHES
  PIPE-FLOW VELOCITY(FEET/SEC.) =  11.88
  ESTIMATED PIPE DIAMETER(INCH) =  24.00    NUMBER OF PIPES =   1
  PIPE-FLOW(CFS) =      30.29
  PIPE TRAVEL TIME(MIN.) =   0.07    Tc(MIN.) =    4.80
  LONGEST FLOWPATH FROM NODE    376.00 TO NODE    371.00 =     626.00 FEET.

****************************************************************************
  FLOW PROCESS FROM NODE    371.00 TO NODE    308.00 IS CODE =  31
----------------------------------------------------------------------------
  >>>>>COMPUTE PIPE-FLOW TRAVEL TIME THRU SUBAREA<<<<<
  >>>>>USING COMPUTER-ESTIMATED PIPESIZE (NON-PRESSURE FLOW)<<<<<
============================================================================
  ELEVATION DATA: UPSTREAM(FEET) =   734.00  DOWNSTREAM(FEET) =   732.00
  FLOW LENGTH(FEET) =   250.00   MANNING'S N =  0.012
  DEPTH OF FLOW IN  30.0 INCH PIPE IS  20.4 INCHES
  PIPE-FLOW VELOCITY(FEET/SEC.) =   8.54
  ESTIMATED PIPE DIAMETER(INCH) =  30.00    NUMBER OF PIPES =   1
  PIPE-FLOW(CFS) =      30.29
  PIPE TRAVEL TIME(MIN.) =   0.49    Tc(MIN.) =    5.28
  LONGEST FLOWPATH FROM NODE    376.00 TO NODE    308.00 =     876.00 FEET.

****************************************************************************
  FLOW PROCESS FROM NODE    308.00 TO NODE    308.00 IS CODE =  81
----------------------------------------------------------------------------
  >>>>>ADDITION OF SUBAREA TO MAINLINE PEAK FLOW<<<<<
```

```
==============================================================================
  100 YEAR RAINFALL INTENSITY(INCH/HOUR) =  8.136
  *USER SPECIFIED(SUBAREA):
  USER-SPECIFIED RUNOFF COEFFICIENT = .3500
  S.C.S. CURVE NUMBER (AMC II) =   0
  AREA-AVERAGE RUNOFF COEFFICIENT = 0.6603
  SUBAREA AREA(ACRES) =    0.81   SUBAREA RUNOFF(CFS) =    2.31
  TOTAL AREA(ACRES) =        5.9   TOTAL RUNOFF(CFS) =      31.54
  TC(MIN.) =    5.28

******************************************************************************
  FLOW PROCESS FROM NODE    308.00 TO NODE    308.00 IS CODE =  11
------------------------------------------------------------------------------
  >>>>>CONFLUENCE MEMORY BANK # 1 WITH THE MAIN-STREAM MEMORY<<<<<
==============================================================================

  ** MAIN STREAM CONFLUENCE DATA **
  STREAM     RUNOFF      Tc      INTENSITY     AREA
  NUMBER      (CFS)    (MIN.)   (INCH/HOUR)   (ACRE)
      1       31.54     5.28       8.136        5.87
  LONGEST FLOWPATH FROM NODE    376.00 TO NODE    308.00 =     876.00 FEET.

  ** MEMORY BANK #  1 CONFLUENCE DATA **
  STREAM     RUNOFF      Tc      INTENSITY     AREA
  NUMBER      (CFS)    (MIN.)   (INCH/HOUR)   (ACRE)
      1      141.38    10.04       5.378       65.34
  LONGEST FLOWPATH FROM NODE    300.00 TO NODE    308.00 =    3168.00 FEET.

  ** PEAK FLOW RATE TABLE **
  STREAM    RUNOFF       Tc      INTENSITY
  NUMBER     (CFS)     (MIN.)   (INCH/HOUR)
      1     105.95       5.28        8.136
      2     162.23      10.04        5.378

  COMPUTED CONFLUENCE ESTIMATES ARE AS FOLLOWS:
  PEAK FLOW RATE(CFS) =     162.23   Tc(MIN.) =   10.04
  TOTAL AREA(ACRES) =       71.2

******************************************************************************
  FLOW PROCESS FROM NODE    308.00 TO NODE    308.00 IS CODE =  12
------------------------------------------------------------------------------
  >>>>>CLEAR MEMORY BANK # 1 <<<<<
==============================================================================

******************************************************************************
  FLOW PROCESS FROM NODE    308.00 TO NODE    309.00 IS CODE =  51
------------------------------------------------------------------------------
  >>>>>COMPUTE TRAPEZOIDAL CHANNEL FLOW<<<<<
  >>>>>TRAVELTIME THRU SUBAREA (EXISTING ELEMENT)<<<<<
==============================================================================
  ELEVATION DATA: UPSTREAM(FEET) =    736.00  DOWNSTREAM(FEET) =    692.00
  CHANNEL LENGTH THRU SUBAREA(FEET) =   680.00   CHANNEL SLOPE =  0.0647
  CHANNEL BASE(FEET) =    3.00   "Z" FACTOR =   2.000
  MANNING'S FACTOR = 0.030   MAXIMUM DEPTH(FEET) =  10.00
  100 YEAR RAINFALL INTENSITY(INCH/HOUR) =  5.105
  *USER SPECIFIED(SUBAREA):
  USER-SPECIFIED RUNOFF COEFFICIENT = .3500
  S.C.S. CURVE NUMBER (AMC II) =   0
  TRAVEL TIME COMPUTED USING ESTIMATED FLOW(CFS) =     165.49
  TRAVEL TIME THRU SUBAREA BASED ON VELOCITY(FEET/SEC.) =  13.42
  AVERAGE FLOW DEPTH(FEET) =   1.84   TRAVEL TIME(MIN.) =   0.84
  Tc(MIN.) =   10.88
  SUBAREA AREA(ACRES) =     3.65       SUBAREA RUNOFF(CFS) =    6.52
```

```
  AREA-AVERAGE RUNOFF COEFFICIENT =  0.411
  TOTAL AREA(ACRES) =       74.9         PEAK FLOW RATE(CFS) =     162.23

  END OF SUBAREA CHANNEL FLOW HYDRAULICS:
  DEPTH(FEET) =  1.83   FLOW VELOCITY(FEET/SEC.) =  13.33
  LONGEST FLOWPATH FROM NODE    300.00 TO NODE    309.00 =    3848.00 FEET.

****************************************************************************
  FLOW PROCESS FROM NODE    309.00 TO NODE    309.00 IS CODE =  10
----------------------------------------------------------------------------
  >>>>>MAIN-STREAM MEMORY COPIED ONTO MEMORY BANK # 1 <<<<<
============================================================================

****************************************************************************
  FLOW PROCESS FROM NODE   3007.00 TO NODE   3008.00 IS CODE =  21
----------------------------------------------------------------------------
  >>>>>RATIONAL METHOD INITIAL SUBAREA ANALYSIS<<<<<
============================================================================
  *USER SPECIFIED(SUBAREA):
  USER-SPECIFIED RUNOFF COEFFICIENT = .3500
  S.C.S. CURVE NUMBER (AMC II) =   0
  INITIAL SUBAREA FLOW-LENGTH(FEET) =    70.00
  UPSTREAM ELEVATION(FEET) =    815.00
  DOWNSTREAM ELEVATION(FEET) =    766.00
  ELEVATION DIFFERENCE(FEET) =     49.00
  SUBAREA OVERLAND TIME OF FLOW(MIN.) =    5.243
  WARNING: THE MAXIMUM OVERLAND FLOW SLOPE, 10.%, IS USED IN Tc CALCULATION!
   100 YEAR RAINFALL INTENSITY(INCH/HOUR) =  8.177
  SUBAREA RUNOFF(CFS) =      1.55
  TOTAL AREA(ACRES) =      0.54   TOTAL RUNOFF(CFS) =      1.55

****************************************************************************
  FLOW PROCESS FROM NODE   3008.00 TO NODE   3009.00 IS CODE =  51
----------------------------------------------------------------------------
  >>>>>COMPUTE TRAPEZOIDAL CHANNEL FLOW<<<<<
  >>>>>TRAVELTIME THRU SUBAREA (EXISTING ELEMENT)<<<<<
============================================================================
  ELEVATION DATA: UPSTREAM(FEET) =    766.00  DOWNSTREAM(FEET) =    709.00
  CHANNEL LENGTH THRU SUBAREA(FEET) =   680.00   CHANNEL SLOPE =  0.0838
  CHANNEL BASE(FEET) =    3.00   "Z" FACTOR =   2.000
  MANNING'S FACTOR = 0.030   MAXIMUM DEPTH(FEET) =  10.00
   100 YEAR RAINFALL INTENSITY(INCH/HOUR) =  6.719
  *USER SPECIFIED(SUBAREA):
  USER-SPECIFIED RUNOFF COEFFICIENT = .3500
  S.C.S. CURVE NUMBER (AMC II) =   0
  TRAVEL TIME COMPUTED USING ESTIMATED FLOW(CFS) =       7.41
  TRAVEL TIME THRU SUBAREA BASED ON VELOCITY(FEET/SEC.) =   6.08
  AVERAGE FLOW DEPTH(FEET) =   0.33   TRAVEL TIME(MIN.) =   1.87
  Tc(MIN.) =    7.11
  SUBAREA AREA(ACRES) =     4.95       SUBAREA RUNOFF(CFS) =   11.64
  AREA-AVERAGE RUNOFF COEFFICIENT =  0.350
  TOTAL AREA(ACRES) =        5.5         PEAK FLOW RATE(CFS) =      12.91

  END OF SUBAREA CHANNEL FLOW HYDRAULICS:
  DEPTH(FEET) =  0.46   FLOW VELOCITY(FEET/SEC.) =   7.15
  LONGEST FLOWPATH FROM NODE   3007.00 TO NODE   3009.00 =     750.00 FEET.

****************************************************************************
  FLOW PROCESS FROM NODE   3009.00 TO NODE   3009.00 IS CODE =   1
----------------------------------------------------------------------------
  >>>>>DESIGNATE INDEPENDENT STREAM FOR CONFLUENCE<<<<<
============================================================================
  TOTAL NUMBER OF STREAMS =  2
```

```
  CONFLUENCE VALUES USED FOR INDEPENDENT STREAM  1 ARE:
  TIME OF CONCENTRATION(MIN.) =    7.11
  RAINFALL INTENSITY(INCH/HR) =   6.72
  TOTAL STREAM AREA(ACRES) =     5.49
  PEAK FLOW RATE(CFS) AT CONFLUENCE =     12.91

****************************************************************************
  FLOW PROCESS FROM NODE   3010.00 TO NODE   3011.00 IS CODE =  21
----------------------------------------------------------------------------
  >>>>>RATIONAL METHOD INITIAL SUBAREA ANALYSIS<<<<<
============================================================================
  *USER SPECIFIED(SUBAREA):
  USER-SPECIFIED RUNOFF COEFFICIENT = .3500
  S.C.S. CURVE NUMBER (AMC II) =   0
  INITIAL SUBAREA FLOW-LENGTH(FEET) =    70.00
  UPSTREAM ELEVATION(FEET) =    751.00
  DOWNSTREAM ELEVATION(FEET) =    744.00
  ELEVATION DIFFERENCE(FEET) =      7.00
  SUBAREA OVERLAND TIME OF FLOW(MIN.) =    5.243
  WARNING: THE MAXIMUM OVERLAND FLOW SLOPE, 10.%, IS USED IN Tc CALCULATION!
   100 YEAR RAINFALL INTENSITY(INCH/HOUR) =  8.177
  SUBAREA RUNOFF(CFS) =      1.23
  TOTAL AREA(ACRES) =      0.43   TOTAL RUNOFF(CFS) =      1.23

****************************************************************************
  FLOW PROCESS FROM NODE   3011.00 TO NODE   3009.00 IS CODE =  51
----------------------------------------------------------------------------
  >>>>>COMPUTE TRAPEZOIDAL CHANNEL FLOW<<<<<
  >>>>>TRAVELTIME THRU SUBAREA (EXISTING ELEMENT)<<<<<
============================================================================
  ELEVATION DATA: UPSTREAM(FEET) =    744.00  DOWNSTREAM(FEET) =    709.00
  CHANNEL LENGTH THRU SUBAREA(FEET) =   400.00   CHANNEL SLOPE =  0.0875
  CHANNEL BASE(FEET) =    3.00   "Z" FACTOR =   2.000
  MANNING'S FACTOR = 0.030   MAXIMUM DEPTH(FEET) =  10.00
   100 YEAR RAINFALL INTENSITY(INCH/HOUR) =  7.233
  *USER SPECIFIED(SUBAREA):
  USER-SPECIFIED RUNOFF COEFFICIENT = .3500
  S.C.S. CURVE NUMBER (AMC II) =   0
  TRAVEL TIME COMPUTED USING ESTIMATED FLOW(CFS) =       7.36
  TRAVEL TIME THRU SUBAREA BASED ON VELOCITY(FEET/SEC.) =   6.07
  AVERAGE FLOW DEPTH(FEET) =   0.33   TRAVEL TIME(MIN.) =   1.10
  Tc(MIN.) =    6.34
  SUBAREA AREA(ACRES) =     4.82       SUBAREA RUNOFF(CFS) =   12.20
  AREA-AVERAGE RUNOFF COEFFICIENT =  0.350
  TOTAL AREA(ACRES) =        5.2         PEAK FLOW RATE(CFS) =      13.29

  END OF SUBAREA CHANNEL FLOW HYDRAULICS:
  DEPTH(FEET) =  0.46   FLOW VELOCITY(FEET/SEC.) =   7.36
  LONGEST FLOWPATH FROM NODE   3010.00 TO NODE   3009.00 =     470.00 FEET.

****************************************************************************
  FLOW PROCESS FROM NODE   3009.00 TO NODE   3009.00 IS CODE =   1
----------------------------------------------------------------------------
  >>>>>DESIGNATE INDEPENDENT STREAM FOR CONFLUENCE<<<<<
  >>>>>AND COMPUTE VARIOUS CONFLUENCED STREAM VALUES<<<<<
============================================================================
  TOTAL NUMBER OF STREAMS =  2
  CONFLUENCE VALUES USED FOR INDEPENDENT STREAM  2 ARE:
  TIME OF CONCENTRATION(MIN.) =    6.34
  RAINFALL INTENSITY(INCH/HR) =   7.23
  TOTAL STREAM AREA(ACRES) =     5.25
  PEAK FLOW RATE(CFS) AT CONFLUENCE =     13.29
```

```
  ** CONFLUENCE DATA **
  STREAM     RUNOFF       Tc      INTENSITY      AREA
  NUMBER      (CFS)     (MIN.)   (INCH/HOUR)    (ACRE)
      1       12.91     7.11        6.719          5.49
      2       13.29     6.34        7.233          5.25

  RAINFALL INTENSITY AND TIME OF CONCENTRATION RATIO
  CONFLUENCE FORMULA USED FOR  2 STREAMS.

  ** PEAK FLOW RATE TABLE **
  STREAM     RUNOFF      Tc      INTENSITY
  NUMBER      (CFS)    (MIN.)   (INCH/HOUR)
      1       24.81     6.34       7.233
      2       25.26     7.11       6.719

  COMPUTED CONFLUENCE ESTIMATES ARE AS FOLLOWS:
  PEAK FLOW RATE(CFS) =      25.26   Tc(MIN.) =    7.11
  TOTAL AREA(ACRES) =       10.7
  LONGEST FLOWPATH FROM NODE   3007.00 TO NODE   3009.00 =     750.00 FEET.

****************************************************************************
  FLOW PROCESS FROM NODE   3009.00 TO NODE    395.00 IS CODE =  31
----------------------------------------------------------------------------
  >>>>>COMPUTE PIPE-FLOW TRAVEL TIME THRU SUBAREA<<<<<
  >>>>>USING COMPUTER-ESTIMATED PIPESIZE (NON-PRESSURE FLOW)<<<<<
============================================================================
  ELEVATION DATA: UPSTREAM(FEET) =   709.00  DOWNSTREAM(FEET) =   694.00
  FLOW LENGTH(FEET) =   700.00   MANNING'S N =  0.013
  DEPTH OF FLOW IN  24.0 INCH PIPE IS  16.3 INCHES
  PIPE-FLOW VELOCITY(FEET/SEC.) =  11.12
  ESTIMATED PIPE DIAMETER(INCH) =  24.00    NUMBER OF PIPES =   1
  PIPE-FLOW(CFS) =      25.26
  PIPE TRAVEL TIME(MIN.) =   1.05    Tc(MIN.) =    8.16
  LONGEST FLOWPATH FROM NODE   3007.00 TO NODE    395.00 =    1450.00 FEET.

****************************************************************************
  FLOW PROCESS FROM NODE    395.00 TO NODE    309.00 IS CODE =  53
----------------------------------------------------------------------------
  >>>>>COMPUTE NATURAL MOUNTAIN CHANNEL FLOW<<<<<
  >>>>>TRAVELTIME THRU SUBAREA<<<<<
============================================================================
  ELEVATION DATA: UPSTREAM(FEET) =    694.00  DOWNSTREAM(FEET) =    692.00
  CHANNEL LENGTH THRU SUBAREA(FEET) =   200.00   CHANNEL SLOPE =  0.0100
  SLOPE ADJUSTMENT CURVE USED:
  EFFECTIVE SLOPE = .0100 (PER LACFCD/RCFC&WCD HYDROLOGY MANUAL)
  CHANNEL FLOW THRU SUBAREA(CFS) =      25.26
  FLOW VELOCITY(FEET/SEC) =   1.64 (PER LACFCD/RCFC&WCD HYDROLOGY MANUAL)
  TRAVEL TIME(MIN.) =   2.03   Tc(MIN.) =   10.19
  LONGEST FLOWPATH FROM NODE   3007.00 TO NODE    309.00 =    1650.00 FEET.

****************************************************************************
  FLOW PROCESS FROM NODE    309.00 TO NODE    309.00 IS CODE =  11
----------------------------------------------------------------------------
  >>>>>CONFLUENCE MEMORY BANK # 1 WITH THE MAIN-STREAM MEMORY<<<<<
============================================================================

  ** MAIN STREAM CONFLUENCE DATA **
  STREAM     RUNOFF      Tc      INTENSITY     AREA
  NUMBER      (CFS)    (MIN.)   (INCH/HOUR)   (ACRE)
      1       25.26    10.19       5.327       10.74
  LONGEST FLOWPATH FROM NODE   3007.00 TO NODE    309.00 =    1650.00 FEET.

  ** MEMORY BANK #  1 CONFLUENCE DATA **
```

```
  STREAM     RUNOFF      Tc      INTENSITY     AREA
  NUMBER      (CFS)    (MIN.)   (INCH/HOUR)   (ACRE)
      1      162.23    10.88       5.105       74.86
  LONGEST FLOWPATH FROM NODE    300.00 TO NODE    309.00 =    3848.00 FEET.

  ** PEAK FLOW RATE TABLE **
  STREAM    RUNOFF       Tc      INTENSITY
  NUMBER     (CFS)     (MIN.)   (INCH/HOUR)
      1     177.12      10.19        5.327
      2     186.43      10.88        5.105

  COMPUTED CONFLUENCE ESTIMATES ARE AS FOLLOWS:
  PEAK FLOW RATE(CFS) =     186.43   Tc(MIN.) =   10.88
  TOTAL AREA(ACRES) =       85.6

****************************************************************************
  FLOW PROCESS FROM NODE    309.00 TO NODE    309.00 IS CODE =  11
----------------------------------------------------------------------------
  >>>>>CONFLUENCE MEMORY BANK # 2 WITH THE MAIN-STREAM MEMORY<<<<<
============================================================================

  ** MAIN STREAM CONFLUENCE DATA **
  STREAM     RUNOFF      Tc      INTENSITY     AREA
  NUMBER      (CFS)    (MIN.)   (INCH/HOUR)   (ACRE)
      1      186.43    10.88       5.105       85.60
  LONGEST FLOWPATH FROM NODE    300.00 TO NODE    309.00 =    3848.00 FEET.

  ** MEMORY BANK #  2 CONFLUENCE DATA **
  STREAM     RUNOFF      Tc      INTENSITY     AREA
  NUMBER      (CFS)    (MIN.)   (INCH/HOUR)   (ACRE)
      1      111.99    12.15       4.756       60.25
  LONGEST FLOWPATH FROM NODE    300.00 TO NODE    309.00 =    4278.00 FEET.

  ** PEAK FLOW RATE TABLE **
  STREAM    RUNOFF       Tc      INTENSITY
  NUMBER     (CFS)     (MIN.)   (INCH/HOUR)
      1     286.78      10.88        5.105
      2     285.68      12.15        4.756

  COMPUTED CONFLUENCE ESTIMATES ARE AS FOLLOWS:
  PEAK FLOW RATE(CFS) =     286.78   Tc(MIN.) =   10.88
  TOTAL AREA(ACRES) =      145.8

****************************************************************************
  FLOW PROCESS FROM NODE    309.00 TO NODE    309.00 IS CODE =  12
----------------------------------------------------------------------------
  >>>>>CLEAR MEMORY BANK # 1 <<<<<
============================================================================

****************************************************************************
  FLOW PROCESS FROM NODE    309.00 TO NODE    309.00 IS CODE =  12
----------------------------------------------------------------------------
  >>>>>CLEAR MEMORY BANK # 2 <<<<<
============================================================================

****************************************************************************
  FLOW PROCESS FROM NODE    309.00 TO NODE   3006.00 IS CODE =  51
----------------------------------------------------------------------------
  >>>>>COMPUTE TRAPEZOIDAL CHANNEL FLOW<<<<<
  >>>>>TRAVELTIME THRU SUBAREA (EXISTING ELEMENT)<<<<<
============================================================================
  ELEVATION DATA: UPSTREAM(FEET) =    692.00  DOWNSTREAM(FEET) =    676.00
  CHANNEL LENGTH THRU SUBAREA(FEET) =   710.00   CHANNEL SLOPE =  0.0225
```

```
  CHANNEL BASE(FEET) =    3.00   "Z" FACTOR =   2.000
  MANNING'S FACTOR = 0.030   MAXIMUM DEPTH(FEET) =  10.00
   100 YEAR RAINFALL INTENSITY(INCH/HOUR) =  4.790
  *USER SPECIFIED(SUBAREA):
  USER-SPECIFIED RUNOFF COEFFICIENT = .3500
  S.C.S. CURVE NUMBER (AMC II) =   0
  TRAVEL TIME COMPUTED USING ESTIMATED FLOW(CFS) =     291.72
  TRAVEL TIME THRU SUBAREA BASED ON VELOCITY(FEET/SEC.) =  10.47
  AVERAGE FLOW DEPTH(FEET) =   3.06   TRAVEL TIME(MIN.) =   1.13
  Tc(MIN.) =   12.01
  SUBAREA AREA(ACRES) =     5.89       SUBAREA RUNOFF(CFS) =    9.87
  AREA-AVERAGE RUNOFF COEFFICIENT =  0.389
  TOTAL AREA(ACRES) =      151.7         PEAK FLOW RATE(CFS) =     286.78

  END OF SUBAREA CHANNEL FLOW HYDRAULICS:
  DEPTH(FEET) =  3.03   FLOW VELOCITY(FEET/SEC.) =  10.43
  LONGEST FLOWPATH FROM NODE    300.00 TO NODE   3006.00 =    4988.00 FEET.

****************************************************************************
  FLOW PROCESS FROM NODE   3006.00 TO NODE   3006.00 IS CODE =  10
----------------------------------------------------------------------------
  >>>>>MAIN-STREAM MEMORY COPIED ONTO MEMORY BANK # 1 <<<<<
============================================================================

****************************************************************************
  FLOW PROCESS FROM NODE    392.00 TO NODE    393.00 IS CODE =  21
----------------------------------------------------------------------------
  >>>>>RATIONAL METHOD INITIAL SUBAREA ANALYSIS<<<<<
============================================================================
  *USER SPECIFIED(SUBAREA):
  USER-SPECIFIED RUNOFF COEFFICIENT = .7100
  S.C.S. CURVE NUMBER (AMC II) =   0
  INITIAL SUBAREA FLOW-LENGTH(FEET) =    70.00
  UPSTREAM ELEVATION(FEET) =    724.00
  DOWNSTREAM ELEVATION(FEET) =    722.00
  ELEVATION DIFFERENCE(FEET) =      2.00
  SUBAREA OVERLAND TIME OF FLOW(MIN.) =    4.139
   100 YEAR RAINFALL INTENSITY(INCH/HOUR) =  8.431
  NOTE: RAINFALL INTENSITY IS BASED ON Tc = 5-MINUTE.
  SUBAREA RUNOFF(CFS) =      1.32
  TOTAL AREA(ACRES) =      0.22   TOTAL RUNOFF(CFS) =      1.32

****************************************************************************
  FLOW PROCESS FROM NODE    393.00 TO NODE    394.00 IS CODE =  62
----------------------------------------------------------------------------
  >>>>>COMPUTE STREET FLOW TRAVEL TIME THRU SUBAREA<<<<<
  >>>>>(STREET TABLE SECTION #  1 USED)<<<<<
============================================================================
  UPSTREAM ELEVATION(FEET) =  722.00  DOWNSTREAM ELEVATION(FEET) =  709.00
  STREET LENGTH(FEET) =   420.00   CURB HEIGHT(INCHES) =  4.0
  STREET HALFWIDTH(FEET) = 12.00

  DISTANCE FROM CROWN TO CROSSFALL GRADEBREAK(FEET) =   6.00
  INSIDE STREET CROSSFALL(DECIMAL) =  0.020
  OUTSIDE STREET CROSSFALL(DECIMAL)  =  0.020

  SPECIFIED NUMBER OF HALFSTREETS CARRYING RUNOFF =  1
  STREET PARKWAY CROSSFALL(DECIMAL)  =  0.020
  Manning's FRICTION FACTOR for Streetflow Section(curb-to-curb) =   0.0150
  Manning's FRICTION FACTOR for Back-of-Walk Flow Section =   0.0150

    **TRAVEL TIME COMPUTED USING ESTIMATED FLOW(CFS) =      10.17
    ***STREET FLOW SPLITS OVER STREET-CROWN***
```

```
    FULL DEPTH(FEET) =    0.26   FLOOD WIDTH(FEET) =   12.00
    FULL HALF-STREET VELOCITY(FEET/SEC.) =    4.18
    SPLIT DEPTH(FEET) =    0.23   SPLIT FLOOD WIDTH(FEET) =   10.45
    SPLIT FLOW(CFS) =    4.14   SPLIT VELOCITY(FEET/SEC.) =    3.79
    STREETFLOW MODEL RESULTS USING ESTIMATED FLOW:
    STREET FLOW DEPTH(FEET) =  0.26
    HALFSTREET FLOOD WIDTH(FEET) =   12.00
    AVERAGE FLOW VELOCITY(FEET/SEC.) =    4.18
    PRODUCT OF DEPTH&VELOCITY(FT*FT/SEC.) =    1.08
  STREET FLOW TRAVEL TIME(MIN.) =   1.67   Tc(MIN.) =    5.81
   100 YEAR RAINFALL INTENSITY(INCH/HOUR) =  7.650
  *USER SPECIFIED(SUBAREA):
  USER-SPECIFIED RUNOFF COEFFICIENT = .7100
  S.C.S. CURVE NUMBER (AMC II) =   0
  AREA-AVERAGE RUNOFF COEFFICIENT =  0.710
  SUBAREA AREA(ACRES) =    3.26      SUBAREA RUNOFF(CFS) =   17.71
  TOTAL AREA(ACRES) =        3.5        PEAK FLOW RATE(CFS) =      18.90

  END OF SUBAREA STREET FLOW HYDRAULICS:
  DEPTH(FEET) = 0.30   HALFSTREET FLOOD WIDTH(FEET) =  12.00
  FLOW VELOCITY(FEET/SEC.) =  5.01   DEPTH*VELOCITY(FT*FT/SEC.) =   1.48
  LONGEST FLOWPATH FROM NODE    392.00 TO NODE    394.00 =     490.00 FEET.

****************************************************************************
  FLOW PROCESS FROM NODE    394.00 TO NODE    396.00 IS CODE =  31
----------------------------------------------------------------------------
  >>>>>COMPUTE PIPE-FLOW TRAVEL TIME THRU SUBAREA<<<<<
  >>>>>USING COMPUTER-ESTIMATED PIPESIZE (NON-PRESSURE FLOW)<<<<<
============================================================================
  ELEVATION DATA: UPSTREAM(FEET) =   703.00  DOWNSTREAM(FEET) =   699.00
  FLOW LENGTH(FEET) =   335.00   MANNING'S N =  0.013
  DEPTH OF FLOW IN  24.0 INCH PIPE IS  16.3 INCHES
  PIPE-FLOW VELOCITY(FEET/SEC.) =   8.30
  ESTIMATED PIPE DIAMETER(INCH) =  24.00    NUMBER OF PIPES =   1
  PIPE-FLOW(CFS) =      18.90
  PIPE TRAVEL TIME(MIN.) =   0.67    Tc(MIN.) =    6.49
  LONGEST FLOWPATH FROM NODE    392.00 TO NODE    396.00 =     825.00 FEET.

****************************************************************************
  FLOW PROCESS FROM NODE    396.00 TO NODE    396.00 IS CODE =   1
----------------------------------------------------------------------------
  >>>>>DESIGNATE INDEPENDENT STREAM FOR CONFLUENCE<<<<<
============================================================================
  TOTAL NUMBER OF STREAMS =  2
  CONFLUENCE VALUES USED FOR INDEPENDENT STREAM  1 ARE:
  TIME OF CONCENTRATION(MIN.) =    6.49
  RAINFALL INTENSITY(INCH/HR) =   7.13
  TOTAL STREAM AREA(ACRES) =     3.48
  PEAK FLOW RATE(CFS) AT CONFLUENCE =     18.90

****************************************************************************
  FLOW PROCESS FROM NODE    397.00 TO NODE    398.00 IS CODE =  21
----------------------------------------------------------------------------
  >>>>>RATIONAL METHOD INITIAL SUBAREA ANALYSIS<<<<<
============================================================================
  *USER SPECIFIED(SUBAREA):
  USER-SPECIFIED RUNOFF COEFFICIENT = .7100
  S.C.S. CURVE NUMBER (AMC II) =   0
  INITIAL SUBAREA FLOW-LENGTH(FEET) =    70.00
  UPSTREAM ELEVATION(FEET) =    708.00
  DOWNSTREAM ELEVATION(FEET) =    707.00
  ELEVATION DIFFERENCE(FEET) =      1.00
  SUBAREA OVERLAND TIME OF FLOW(MIN.) =    5.215
```

```
 100 YEAR RAINFALL INTENSITY(INCH/HOUR) =  8.205
SUBAREA RUNOFF(CFS) =      1.40
TOTAL AREA(ACRES) =      0.24   TOTAL RUNOFF(CFS) =      1.40

****************************************************************************
FLOW PROCESS FROM NODE    398.00 TO NODE    396.00 IS CODE =  62
----------------------------------------------------------------------------
>>>>>COMPUTE STREET FLOW TRAVEL TIME THRU SUBAREA<<<<<
>>>>>(STREET TABLE SECTION #  1 USED)<<<<<
============================================================================
UPSTREAM ELEVATION(FEET) =  707.00  DOWNSTREAM ELEVATION(FEET) =  705.00
STREET LENGTH(FEET) =   185.00   CURB HEIGHT(INCHES) =  4.0
STREET HALFWIDTH(FEET) = 12.00

DISTANCE FROM CROWN TO CROSSFALL GRADEBREAK(FEET) =   6.00
INSIDE STREET CROSSFALL(DECIMAL) =  0.020
OUTSIDE STREET CROSSFALL(DECIMAL)  =  0.020

SPECIFIED NUMBER OF HALFSTREETS CARRYING RUNOFF =  1
STREET PARKWAY CROSSFALL(DECIMAL)  =  0.020
Manning's FRICTION FACTOR for Streetflow Section(curb-to-curb) =   0.0150
Manning's FRICTION FACTOR for Back-of-Walk Flow Section =   0.0150

  **TRAVEL TIME COMPUTED USING ESTIMATED FLOW(CFS) =       6.50
  ***STREET FLOW SPLITS OVER STREET-CROWN***
  FULL DEPTH(FEET) =    0.26   FLOOD WIDTH(FEET) =   12.00
  FULL HALF-STREET VELOCITY(FEET/SEC.) =    2.47
  SPLIT DEPTH(FEET) =    0.24   SPLIT FLOOD WIDTH(FEET) =   11.20
  SPLIT FLOW(CFS) =    2.94   SPLIT VELOCITY(FEET/SEC.) =    2.34
  STREETFLOW MODEL RESULTS USING ESTIMATED FLOW:
  STREET FLOW DEPTH(FEET) =  0.26
  HALFSTREET FLOOD WIDTH(FEET) =   12.00
  AVERAGE FLOW VELOCITY(FEET/SEC.) =    2.47
  PRODUCT OF DEPTH&VELOCITY(FT*FT/SEC.) =    0.64
STREET FLOW TRAVEL TIME(MIN.) =   1.25   Tc(MIN.) =    6.46
 100 YEAR RAINFALL INTENSITY(INCH/HOUR) =  7.145
*USER SPECIFIED(SUBAREA):
USER-SPECIFIED RUNOFF COEFFICIENT = .7100
S.C.S. CURVE NUMBER (AMC II) =   0
AREA-AVERAGE RUNOFF COEFFICIENT =  0.710
SUBAREA AREA(ACRES) =    2.01      SUBAREA RUNOFF(CFS) =   10.20
TOTAL AREA(ACRES) =        2.2        PEAK FLOW RATE(CFS) =      11.41

END OF SUBAREA STREET FLOW HYDRAULICS:
DEPTH(FEET) = 0.30   HALFSTREET FLOOD WIDTH(FEET) =  12.00
FLOW VELOCITY(FEET/SEC.) =  2.98   DEPTH*VELOCITY(FT*FT/SEC.) =   0.89
LONGEST FLOWPATH FROM NODE    397.00 TO NODE    396.00 =     255.00 FEET.

****************************************************************************
FLOW PROCESS FROM NODE    396.00 TO NODE    396.00 IS CODE =   1
----------------------------------------------------------------------------
>>>>>DESIGNATE INDEPENDENT STREAM FOR CONFLUENCE<<<<<
>>>>>AND COMPUTE VARIOUS CONFLUENCED STREAM VALUES<<<<<
============================================================================
TOTAL NUMBER OF STREAMS =  2
CONFLUENCE VALUES USED FOR INDEPENDENT STREAM  2 ARE:
TIME OF CONCENTRATION(MIN.) =    6.46
RAINFALL INTENSITY(INCH/HR) =   7.14
TOTAL STREAM AREA(ACRES) =     2.25
PEAK FLOW RATE(CFS) AT CONFLUENCE =     11.41

** CONFLUENCE DATA **
STREAM     RUNOFF       Tc      INTENSITY      AREA
```

```
                                        P-300
  NUMBER      (CFS)     (MIN.)   (INCH/HOUR)    (ACRE)
      1       18.90     6.49        7.128          3.48
      2       11.41     6.46        7.145          2.25

  RAINFALL INTENSITY AND TIME OF CONCENTRATION RATIO
  CONFLUENCE FORMULA USED FOR  2 STREAMS.

  ** PEAK FLOW RATE TABLE **
  STREAM     RUNOFF      Tc      INTENSITY
  NUMBER      (CFS)    (MIN.)   (INCH/HOUR)
      1       30.25     6.46       7.145
      2       30.29     6.49       7.128

  COMPUTED CONFLUENCE ESTIMATES ARE AS FOLLOWS:
  PEAK FLOW RATE(CFS) =      30.29   Tc(MIN.) =    6.49
  TOTAL AREA(ACRES) =        5.7
  LONGEST FLOWPATH FROM NODE    392.00 TO NODE    396.00 =     825.00 FEET.

****************************************************************************
  FLOW PROCESS FROM NODE    396.00 TO NODE   3004.00 IS CODE =  31
----------------------------------------------------------------------------
  >>>>>COMPUTE PIPE-FLOW TRAVEL TIME THRU SUBAREA<<<<<
  >>>>>USING COMPUTER-ESTIMATED PIPESIZE (NON-PRESSURE FLOW)<<<<<
============================================================================
  ELEVATION DATA: UPSTREAM(FEET) =   699.00  DOWNSTREAM(FEET) =   686.00
  FLOW LENGTH(FEET) =   350.00   MANNING'S N =  0.013
  DEPTH OF FLOW IN  24.0 INCH PIPE IS  15.3 INCHES
  PIPE-FLOW VELOCITY(FEET/SEC.) =  14.38
  ESTIMATED PIPE DIAMETER(INCH) =  24.00    NUMBER OF PIPES =   1
  PIPE-FLOW(CFS) =      30.29
  PIPE TRAVEL TIME(MIN.) =   0.41    Tc(MIN.) =    6.89
  LONGEST FLOWPATH FROM NODE    392.00 TO NODE   3004.00 =    1175.00 FEET.

****************************************************************************
  FLOW PROCESS FROM NODE   3004.00 TO NODE   3004.00 IS CODE =   1
----------------------------------------------------------------------------
  >>>>>DESIGNATE INDEPENDENT STREAM FOR CONFLUENCE<<<<<
============================================================================
  TOTAL NUMBER OF STREAMS =  2
  CONFLUENCE VALUES USED FOR INDEPENDENT STREAM  1 ARE:
  TIME OF CONCENTRATION(MIN.) =    6.89
  RAINFALL INTENSITY(INCH/HR) =   6.85
  TOTAL STREAM AREA(ACRES) =     5.73
  PEAK FLOW RATE(CFS) AT CONFLUENCE =     30.29

****************************************************************************
  FLOW PROCESS FROM NODE   3001.00 TO NODE   3002.00 IS CODE =  21
----------------------------------------------------------------------------
  >>>>>RATIONAL METHOD INITIAL SUBAREA ANALYSIS<<<<<
============================================================================
  *USER SPECIFIED(SUBAREA):
  USER-SPECIFIED RUNOFF COEFFICIENT = .7100
  S.C.S. CURVE NUMBER (AMC II) =   0
  INITIAL SUBAREA FLOW-LENGTH(FEET) =    70.00
  UPSTREAM ELEVATION(FEET) =    706.00
  DOWNSTREAM ELEVATION(FEET) =    704.00
  ELEVATION DIFFERENCE(FEET) =      2.00
  SUBAREA OVERLAND TIME OF FLOW(MIN.) =    4.139
   100 YEAR RAINFALL INTENSITY(INCH/HOUR) =  8.431
  NOTE: RAINFALL INTENSITY IS BASED ON Tc = 5-MINUTE.
  SUBAREA RUNOFF(CFS) =      1.86
  TOTAL AREA(ACRES) =      0.31   TOTAL RUNOFF(CFS) =      1.86
```

```
****************************************************************************
  FLOW PROCESS FROM NODE   3002.00 TO NODE   3003.00 IS CODE =  62
----------------------------------------------------------------------------
  >>>>>COMPUTE STREET FLOW TRAVEL TIME THRU SUBAREA<<<<<
  >>>>>(STREET TABLE SECTION #  1 USED)<<<<<
============================================================================
  UPSTREAM ELEVATION(FEET) =  704.00  DOWNSTREAM ELEVATION(FEET) =  691.00
  STREET LENGTH(FEET) =   335.00   CURB HEIGHT(INCHES) =  4.0
  STREET HALFWIDTH(FEET) = 12.00

  DISTANCE FROM CROWN TO CROSSFALL GRADEBREAK(FEET) =   6.00
  INSIDE STREET CROSSFALL(DECIMAL) =  0.020
  OUTSIDE STREET CROSSFALL(DECIMAL)  =  0.020

  SPECIFIED NUMBER OF HALFSTREETS CARRYING RUNOFF =  1
  STREET PARKWAY CROSSFALL(DECIMAL)  =  0.020
  Manning's FRICTION FACTOR for Streetflow Section(curb-to-curb) =   0.0150
  Manning's FRICTION FACTOR for Back-of-Walk Flow Section =   0.0150

    **TRAVEL TIME COMPUTED USING ESTIMATED FLOW(CFS) =      11.22
    ***STREET FLOW SPLITS OVER STREET-CROWN***
    FULL DEPTH(FEET) =    0.26   FLOOD WIDTH(FEET) =   12.00
    FULL HALF-STREET VELOCITY(FEET/SEC.) =    4.68
    SPLIT DEPTH(FEET) =    0.22   SPLIT FLOOD WIDTH(FEET) =   10.27
    SPLIT FLOW(CFS) =    4.47   SPLIT VELOCITY(FEET/SEC.) =    4.24
    STREETFLOW MODEL RESULTS USING ESTIMATED FLOW:
    STREET FLOW DEPTH(FEET) =  0.26
    HALFSTREET FLOOD WIDTH(FEET) =   12.00
    AVERAGE FLOW VELOCITY(FEET/SEC.) =    4.68
    PRODUCT OF DEPTH&VELOCITY(FT*FT/SEC.) =    1.21
  STREET FLOW TRAVEL TIME(MIN.) =   1.19   Tc(MIN.) =    5.33
   100 YEAR RAINFALL INTENSITY(INCH/HOUR) =  8.089
  *USER SPECIFIED(SUBAREA):
  USER-SPECIFIED RUNOFF COEFFICIENT = .7100
  S.C.S. CURVE NUMBER (AMC II) =   0
  AREA-AVERAGE RUNOFF COEFFICIENT =  0.710
  SUBAREA AREA(ACRES) =    3.26      SUBAREA RUNOFF(CFS) =   18.72
  TOTAL AREA(ACRES) =        3.6        PEAK FLOW RATE(CFS) =      20.50

  END OF SUBAREA STREET FLOW HYDRAULICS:
  DEPTH(FEET) = 0.29   HALFSTREET FLOOD WIDTH(FEET) =  12.00
  FLOW VELOCITY(FEET/SEC.) =  5.51   DEPTH*VELOCITY(FT*FT/SEC.) =   1.61
  LONGEST FLOWPATH FROM NODE   3001.00 TO NODE   3003.00 =     405.00 FEET.

****************************************************************************
  FLOW PROCESS FROM NODE   3003.00 TO NODE   3004.00 IS CODE =  31
----------------------------------------------------------------------------
  >>>>>COMPUTE PIPE-FLOW TRAVEL TIME THRU SUBAREA<<<<<
  >>>>>USING COMPUTER-ESTIMATED PIPESIZE (NON-PRESSURE FLOW)<<<<<
============================================================================
  ELEVATION DATA: UPSTREAM(FEET) =   687.00  DOWNSTREAM(FEET) =   686.00
  FLOW LENGTH(FEET) =    25.00   MANNING'S N =  0.013
  DEPTH OF FLOW IN  21.0 INCH PIPE IS  12.7 INCHES
  PIPE-FLOW VELOCITY(FEET/SEC.) =  13.45
  ESTIMATED PIPE DIAMETER(INCH) =  21.00    NUMBER OF PIPES =   1
  PIPE-FLOW(CFS) =      20.50
  PIPE TRAVEL TIME(MIN.) =   0.03    Tc(MIN.) =    5.36
  LONGEST FLOWPATH FROM NODE   3001.00 TO NODE   3004.00 =     430.00 FEET.

****************************************************************************
  FLOW PROCESS FROM NODE   3004.00 TO NODE   3004.00 IS CODE =   1
----------------------------------------------------------------------------
  >>>>>DESIGNATE INDEPENDENT STREAM FOR CONFLUENCE<<<<<
```

```
  >>>>>AND COMPUTE VARIOUS CONFLUENCED STREAM VALUES<<<<<
==============================================================================
  TOTAL NUMBER OF STREAMS =  2
  CONFLUENCE VALUES USED FOR INDEPENDENT STREAM  2 ARE:
  TIME OF CONCENTRATION(MIN.) =    5.36
  RAINFALL INTENSITY(INCH/HR) =   8.06
  TOTAL STREAM AREA(ACRES) =     3.57
  PEAK FLOW RATE(CFS) AT CONFLUENCE =     20.50

  ** CONFLUENCE DATA **
  STREAM     RUNOFF       Tc      INTENSITY      AREA
  NUMBER      (CFS)     (MIN.)   (INCH/HOUR)    (ACRE)
      1       30.29     6.89        6.855          5.73
      2       20.50     5.36        8.058          3.57

  RAINFALL INTENSITY AND TIME OF CONCENTRATION RATIO
  CONFLUENCE FORMULA USED FOR  2 STREAMS.

  ** PEAK FLOW RATE TABLE **
  STREAM     RUNOFF      Tc      INTENSITY
  NUMBER      (CFS)    (MIN.)   (INCH/HOUR)
      1       46.27     5.36       8.058
      2       47.73     6.89       6.855

  COMPUTED CONFLUENCE ESTIMATES ARE AS FOLLOWS:
  PEAK FLOW RATE(CFS) =      47.73   Tc(MIN.) =    6.89
  TOTAL AREA(ACRES) =        9.3
  LONGEST FLOWPATH FROM NODE    392.00 TO NODE   3004.00 =    1175.00 FEET.

****************************************************************************
  FLOW PROCESS FROM NODE   3004.00 TO NODE   3005.00 IS CODE =  31
----------------------------------------------------------------------------
  >>>>>COMPUTE PIPE-FLOW TRAVEL TIME THRU SUBAREA<<<<<
  >>>>>USING COMPUTER-ESTIMATED PIPESIZE (NON-PRESSURE FLOW)<<<<<
==============================================================================
  ELEVATION DATA: UPSTREAM(FEET) =   686.00  DOWNSTREAM(FEET) =   682.00
  FLOW LENGTH(FEET) =   100.00   MANNING'S N =  0.013
  DEPTH OF FLOW IN  27.0 INCH PIPE IS  18.5 INCHES
  PIPE-FLOW VELOCITY(FEET/SEC.) =  16.46
  ESTIMATED PIPE DIAMETER(INCH) =  27.00    NUMBER OF PIPES =   1
  PIPE-FLOW(CFS) =      47.73
  PIPE TRAVEL TIME(MIN.) =   0.10    Tc(MIN.) =    6.99
  LONGEST FLOWPATH FROM NODE    392.00 TO NODE   3005.00 =    1275.00 FEET.

****************************************************************************
  FLOW PROCESS FROM NODE   3005.00 TO NODE   3005.00 IS CODE =   1
----------------------------------------------------------------------------
  >>>>>DESIGNATE INDEPENDENT STREAM FOR CONFLUENCE<<<<<
==============================================================================
  TOTAL NUMBER OF STREAMS =  2
  CONFLUENCE VALUES USED FOR INDEPENDENT STREAM  1 ARE:
  TIME OF CONCENTRATION(MIN.) =    6.99
  RAINFALL INTENSITY(INCH/HR) =   6.79
  TOTAL STREAM AREA(ACRES) =     9.30
  PEAK FLOW RATE(CFS) AT CONFLUENCE =     47.73

****************************************************************************
  FLOW PROCESS FROM NODE    387.00 TO NODE    388.00 IS CODE =  21
----------------------------------------------------------------------------
  >>>>>RATIONAL METHOD INITIAL SUBAREA ANALYSIS<<<<<
==============================================================================
  *USER SPECIFIED(SUBAREA):
  USER-SPECIFIED RUNOFF COEFFICIENT = .7100
```

```
  S.C.S. CURVE NUMBER (AMC II) =   0
  INITIAL SUBAREA FLOW-LENGTH(FEET) =   100.00
  UPSTREAM ELEVATION(FEET) =    760.00
  DOWNSTREAM ELEVATION(FEET) =    754.00
  ELEVATION DIFFERENCE(FEET) =      6.00
  SUBAREA OVERLAND TIME OF FLOW(MIN.) =    3.863
   100 YEAR RAINFALL INTENSITY(INCH/HOUR) =  8.431
  NOTE: RAINFALL INTENSITY IS BASED ON Tc = 5-MINUTE.
  SUBAREA RUNOFF(CFS) =      0.60
  TOTAL AREA(ACRES) =      0.10   TOTAL RUNOFF(CFS) =      0.60

****************************************************************************
  FLOW PROCESS FROM NODE    388.00 TO NODE    389.00 IS CODE =  62
----------------------------------------------------------------------------
  >>>>>COMPUTE STREET FLOW TRAVEL TIME THRU SUBAREA<<<<<
  >>>>>(STREET TABLE SECTION #  1 USED)<<<<<
============================================================================
  UPSTREAM ELEVATION(FEET) =  754.00  DOWNSTREAM ELEVATION(FEET) =  699.00
  STREET LENGTH(FEET) =   800.00   CURB HEIGHT(INCHES) =  4.0
  STREET HALFWIDTH(FEET) = 12.00

  DISTANCE FROM CROWN TO CROSSFALL GRADEBREAK(FEET) =   6.00
  INSIDE STREET CROSSFALL(DECIMAL) =  0.020
  OUTSIDE STREET CROSSFALL(DECIMAL)  =  0.020

  SPECIFIED NUMBER OF HALFSTREETS CARRYING RUNOFF =  2
  STREET PARKWAY CROSSFALL(DECIMAL)  =  0.020
  Manning's FRICTION FACTOR for Streetflow Section(curb-to-curb) =   0.0150
  Manning's FRICTION FACTOR for Back-of-Walk Flow Section =   0.0150

    **TRAVEL TIME COMPUTED USING ESTIMATED FLOW(CFS) =      10.63
    STREETFLOW MODEL RESULTS USING ESTIMATED FLOW:
    STREET FLOW DEPTH(FEET) =  0.22
    HALFSTREET FLOOD WIDTH(FEET) =    9.89
    AVERAGE FLOW VELOCITY(FEET/SEC.) =    5.43
    PRODUCT OF DEPTH&VELOCITY(FT*FT/SEC.) =    1.17
  STREET FLOW TRAVEL TIME(MIN.) =   2.46   Tc(MIN.) =    6.32
   100 YEAR RAINFALL INTENSITY(INCH/HOUR) =  7.248
  *USER SPECIFIED(SUBAREA):
  USER-SPECIFIED RUNOFF COEFFICIENT = .7100
  S.C.S. CURVE NUMBER (AMC II) =   0
  AREA-AVERAGE RUNOFF COEFFICIENT =  0.710
  SUBAREA AREA(ACRES) =    3.86      SUBAREA RUNOFF(CFS) =   19.86
  TOTAL AREA(ACRES) =        4.0        PEAK FLOW RATE(CFS) =      20.38

  END OF SUBAREA STREET FLOW HYDRAULICS:
  DEPTH(FEET) = 0.27   HALFSTREET FLOOD WIDTH(FEET) =  12.00
  FLOW VELOCITY(FEET/SEC.) =  6.57   DEPTH*VELOCITY(FT*FT/SEC.) =   1.75
  LONGEST FLOWPATH FROM NODE    387.00 TO NODE    389.00 =     900.00 FEET.

****************************************************************************
  FLOW PROCESS FROM NODE    389.00 TO NODE   3005.00 IS CODE =  31
----------------------------------------------------------------------------
  >>>>>COMPUTE PIPE-FLOW TRAVEL TIME THRU SUBAREA<<<<<
  >>>>>USING COMPUTER-ESTIMATED PIPESIZE (NON-PRESSURE FLOW)<<<<<
============================================================================
  ELEVATION DATA: UPSTREAM(FEET) =   693.00  DOWNSTREAM(FEET) =   682.00
  FLOW LENGTH(FEET) =   200.00   MANNING'S N =  0.013
  DEPTH OF FLOW IN  18.0 INCH PIPE IS  13.0 INCHES
  PIPE-FLOW VELOCITY(FEET/SEC.) =  14.90
  ESTIMATED PIPE DIAMETER(INCH) =  18.00    NUMBER OF PIPES =   1
  PIPE-FLOW(CFS) =      20.38
  PIPE TRAVEL TIME(MIN.) =   0.22    Tc(MIN.) =    6.54
```

```
  LONGEST FLOWPATH FROM NODE    387.00 TO NODE   3005.00 =    1100.00 FEET.

****************************************************************************
  FLOW PROCESS FROM NODE   3005.00 TO NODE   3005.00 IS CODE =   1
----------------------------------------------------------------------------
  >>>>>DESIGNATE INDEPENDENT STREAM FOR CONFLUENCE<<<<<
  >>>>>AND COMPUTE VARIOUS CONFLUENCED STREAM VALUES<<<<<
============================================================================
  TOTAL NUMBER OF STREAMS =  2
  CONFLUENCE VALUES USED FOR INDEPENDENT STREAM  2 ARE:
  TIME OF CONCENTRATION(MIN.) =    6.54
  RAINFALL INTENSITY(INCH/HR) =   7.09
  TOTAL STREAM AREA(ACRES) =     3.96
  PEAK FLOW RATE(CFS) AT CONFLUENCE =     20.38

  ** CONFLUENCE DATA **
  STREAM     RUNOFF       Tc      INTENSITY      AREA
  NUMBER      (CFS)     (MIN.)   (INCH/HOUR)    (ACRE)
      1       47.73     6.99        6.791          9.30
      2       20.38     6.54        7.088          3.96

  RAINFALL INTENSITY AND TIME OF CONCENTRATION RATIO
  CONFLUENCE FORMULA USED FOR  2 STREAMS.

  ** PEAK FLOW RATE TABLE **
  STREAM     RUNOFF      Tc      INTENSITY
  NUMBER      (CFS)    (MIN.)   (INCH/HOUR)
      1       66.11     6.54       7.088
      2       67.25     6.99       6.791

  COMPUTED CONFLUENCE ESTIMATES ARE AS FOLLOWS:
  PEAK FLOW RATE(CFS) =      67.25   Tc(MIN.) =    6.99
  TOTAL AREA(ACRES) =       13.3
  LONGEST FLOWPATH FROM NODE    392.00 TO NODE   3005.00 =    1275.00 FEET.

****************************************************************************
  FLOW PROCESS FROM NODE   3005.00 TO NODE   3005.00 IS CODE =  81
----------------------------------------------------------------------------
  >>>>>ADDITION OF SUBAREA TO MAINLINE PEAK FLOW<<<<<
============================================================================
   100 YEAR RAINFALL INTENSITY(INCH/HOUR) =  6.791
  *USER SPECIFIED(SUBAREA):
  USER-SPECIFIED RUNOFF COEFFICIENT = .3500
  S.C.S. CURVE NUMBER (AMC II) =   0
  AREA-AVERAGE RUNOFF COEFFICIENT = 0.6708
  SUBAREA AREA(ACRES) =    1.62   SUBAREA RUNOFF(CFS) =    3.85
  TOTAL AREA(ACRES) =       14.9   TOTAL RUNOFF(CFS) =      67.78
  TC(MIN.) =    6.99

****************************************************************************
  FLOW PROCESS FROM NODE   3005.00 TO NODE   3006.00 IS CODE =  31
----------------------------------------------------------------------------
  >>>>>COMPUTE PIPE-FLOW TRAVEL TIME THRU SUBAREA<<<<<
  >>>>>USING COMPUTER-ESTIMATED PIPESIZE (NON-PRESSURE FLOW)<<<<<
============================================================================
  ELEVATION DATA: UPSTREAM(FEET) =   678.00  DOWNSTREAM(FEET) =   676.00
  FLOW LENGTH(FEET) =   100.00   MANNING'S N =  0.013
  DEPTH OF FLOW IN  33.0 INCH PIPE IS  25.8 INCHES
  PIPE-FLOW VELOCITY(FEET/SEC.) =  13.60
  ESTIMATED PIPE DIAMETER(INCH) =  33.00    NUMBER OF PIPES =   1
  PIPE-FLOW(CFS) =      67.78
  PIPE TRAVEL TIME(MIN.) =   0.12    Tc(MIN.) =    7.12
  LONGEST FLOWPATH FROM NODE    392.00 TO NODE   3006.00 =    1375.00 FEET.
```

```
****************************************************************************
  FLOW PROCESS FROM NODE   3006.00 TO NODE   3006.00 IS CODE =  11
----------------------------------------------------------------------------
  >>>>>CONFLUENCE MEMORY BANK # 1 WITH THE MAIN-STREAM MEMORY<<<<<
============================================================================

  ** MAIN STREAM CONFLUENCE DATA **
  STREAM     RUNOFF      Tc      INTENSITY     AREA
  NUMBER      (CFS)    (MIN.)   (INCH/HOUR)   (ACRE)
      1       67.78     7.12       6.715       14.88
  LONGEST FLOWPATH FROM NODE    392.00 TO NODE   3006.00 =    1375.00 FEET.

  ** MEMORY BANK #  1 CONFLUENCE DATA **
  STREAM     RUNOFF      Tc      INTENSITY     AREA
  NUMBER      (CFS)    (MIN.)   (INCH/HOUR)   (ACRE)
      1      286.78    12.01       4.790      151.74
  LONGEST FLOWPATH FROM NODE    300.00 TO NODE   3006.00 =    4988.00 FEET.

  ** PEAK FLOW RATE TABLE **
  STREAM    RUNOFF       Tc      INTENSITY
  NUMBER     (CFS)     (MIN.)   (INCH/HOUR)
      1     237.64       7.12        6.715
      2     335.13      12.01        4.790

  COMPUTED CONFLUENCE ESTIMATES ARE AS FOLLOWS:
  PEAK FLOW RATE(CFS) =     335.13   Tc(MIN.) =   12.01
  TOTAL AREA(ACRES) =      166.6

****************************************************************************
  FLOW PROCESS FROM NODE   3006.00 TO NODE   3006.00 IS CODE =  12
----------------------------------------------------------------------------
  >>>>>CLEAR MEMORY BANK # 1 <<<<<
============================================================================

****************************************************************************
  FLOW PROCESS FROM NODE   3006.00 TO NODE   3006.00 IS CODE =   1
----------------------------------------------------------------------------
  >>>>>DESIGNATE INDEPENDENT STREAM FOR CONFLUENCE<<<<<
============================================================================
  TOTAL NUMBER OF STREAMS =  2
  CONFLUENCE VALUES USED FOR INDEPENDENT STREAM  1 ARE:
  TIME OF CONCENTRATION(MIN.) =   12.01
  RAINFALL INTENSITY(INCH/HR) =   4.79
  TOTAL STREAM AREA(ACRES) =   166.62
  PEAK FLOW RATE(CFS) AT CONFLUENCE =    335.13

****************************************************************************
  FLOW PROCESS FROM NODE   3014.00 TO NODE   3012.00 IS CODE =  21
----------------------------------------------------------------------------
  >>>>>RATIONAL METHOD INITIAL SUBAREA ANALYSIS<<<<<
============================================================================
  *USER SPECIFIED(SUBAREA):
  USER-SPECIFIED RUNOFF COEFFICIENT = .3500
  S.C.S. CURVE NUMBER (AMC II) =   0
  INITIAL SUBAREA FLOW-LENGTH(FEET) =    70.00
  UPSTREAM ELEVATION(FEET) =    739.00
  DOWNSTREAM ELEVATION(FEET) =    710.00
  ELEVATION DIFFERENCE(FEET) =     29.00
  SUBAREA OVERLAND TIME OF FLOW(MIN.) =    5.243
  WARNING: THE MAXIMUM OVERLAND FLOW SLOPE, 10.%, IS USED IN Tc CALCULATION!
   100 YEAR RAINFALL INTENSITY(INCH/HOUR) =  8.177
  SUBAREA RUNOFF(CFS) =      0.94
```

```
  TOTAL AREA(ACRES) =      0.33   TOTAL RUNOFF(CFS) =      0.94

****************************************************************************
  FLOW PROCESS FROM NODE   3012.00 TO NODE   3006.00 IS CODE =  91
----------------------------------------------------------------------------
  >>>>>COMPUTE "V" GUTTER FLOW TRAVEL TIME THRU SUBAREA<<<<<
============================================================================
  UPSTREAM NODE ELEVATION(FEET) =    710.00
  DOWNSTREAM NODE ELEVATION(FEET) =    675.00
  CHANNEL LENGTH THRU SUBAREA(FEET) =   650.00
  "V" GUTTER WIDTH(FEET) =   4.00   GUTTER HIKE(FEET) =  0.800
  PAVEMENT LIP(FEET) =  0.010   MANNING'S N = .0130
  PAVEMENT CROSSFALL(DECIMAL NOTATION) = 0.20000
  MAXIMUM DEPTH(FEET) =   1.50
   100 YEAR RAINFALL INTENSITY(INCH/HOUR) =  7.469
  *USER SPECIFIED(SUBAREA):
  USER-SPECIFIED RUNOFF COEFFICIENT = .3500
  S.C.S. CURVE NUMBER (AMC II) =   0
  TRAVEL TIME COMPUTED USING ESTIMATED FLOW(CFS) =      1.77
  TRAVEL TIME THRU SUBAREA BASED ON VELOCITY(FEET/SEC.) =  13.70
  AVERAGE FLOW DEPTH(FEET) =   0.80   FLOOD WIDTH(FEET) =    4.00
  "V" GUTTER FLOW TRAVEL TIME(MIN.) =   0.79   Tc(MIN.) =    6.03
  SUBAREA AREA(ACRES) =    0.63       SUBAREA RUNOFF(CFS) =    1.65
  AREA-AVERAGE RUNOFF COEFFICIENT =  0.350
  TOTAL AREA(ACRES) =        1.0         PEAK FLOW RATE(CFS) =       2.51

         NOTE:TRAVEL TIME ESTIMATES BASED ON NORMAL DEPTH
         IN A FLOWING-FULL GUTTER(NORMAL DEPTH = GUTTER HIKE)


  END OF SUBAREA "V" GUTTER HYDRAULICS:
  DEPTH(FEET) =  0.80   FLOOD WIDTH(FEET) =    4.00
  FLOW VELOCITY(FEET/SEC.) =  13.70   DEPTH*VELOCITY(FT*FT/SEC) =  10.96
  LONGEST FLOWPATH FROM NODE   3014.00 TO NODE   3006.00 =     720.00 FEET.

****************************************************************************
  FLOW PROCESS FROM NODE   3006.00 TO NODE   3006.00 IS CODE =   1
----------------------------------------------------------------------------
  >>>>>DESIGNATE INDEPENDENT STREAM FOR CONFLUENCE<<<<<
  >>>>>AND COMPUTE VARIOUS CONFLUENCED STREAM VALUES<<<<<
============================================================================
  TOTAL NUMBER OF STREAMS =  2
  CONFLUENCE VALUES USED FOR INDEPENDENT STREAM  2 ARE:
  TIME OF CONCENTRATION(MIN.) =    6.03
  RAINFALL INTENSITY(INCH/HR) =   7.47
  TOTAL STREAM AREA(ACRES) =     0.96
  PEAK FLOW RATE(CFS) AT CONFLUENCE =      2.51

  ** CONFLUENCE DATA **
  STREAM     RUNOFF       Tc      INTENSITY      AREA
  NUMBER      (CFS)     (MIN.)   (INCH/HOUR)    (ACRE)
      1      335.13    12.01        4.790        166.62
      2        2.51     6.03        7.469          0.96

  RAINFALL INTENSITY AND TIME OF CONCENTRATION RATIO
  CONFLUENCE FORMULA USED FOR  2 STREAMS.

  ** PEAK FLOW RATE TABLE **
  STREAM     RUNOFF      Tc      INTENSITY
  NUMBER      (CFS)    (MIN.)   (INCH/HOUR)
      1      170.82     6.03       7.469
      2      336.74    12.01       4.790
```

```
  COMPUTED CONFLUENCE ESTIMATES ARE AS FOLLOWS:
  PEAK FLOW RATE(CFS) =     336.74   Tc(MIN.) =   12.01
  TOTAL AREA(ACRES) =      167.6
  LONGEST FLOWPATH FROM NODE    300.00 TO NODE   3006.00 =    4988.00 FEET.

****************************************************************************
  FLOW PROCESS FROM NODE   3006.00 TO NODE   3013.00 IS CODE =  51
----------------------------------------------------------------------------
  >>>>>COMPUTE TRAPEZOIDAL CHANNEL FLOW<<<<<
  >>>>>TRAVELTIME THRU SUBAREA (EXISTING ELEMENT)<<<<<
============================================================================
  ELEVATION DATA: UPSTREAM(FEET) =    675.00  DOWNSTREAM(FEET) =    670.00
  CHANNEL LENGTH THRU SUBAREA(FEET) =   260.00   CHANNEL SLOPE =  0.0192
  CHANNEL BASE(FEET) =    3.00   "Z" FACTOR =   2.000
  MANNING'S FACTOR = 0.030   MAXIMUM DEPTH(FEET) =  10.00
   100 YEAR RAINFALL INTENSITY(INCH/HOUR) =  4.684
  *USER SPECIFIED(SUBAREA):
  USER-SPECIFIED RUNOFF COEFFICIENT = .3500
  S.C.S. CURVE NUMBER (AMC II) =   0
  TRAVEL TIME COMPUTED USING ESTIMATED FLOW(CFS) =     339.77
  TRAVEL TIME THRU SUBAREA BASED ON VELOCITY(FEET/SEC.) =  10.25
  AVERAGE FLOW DEPTH(FEET) =   3.39   TRAVEL TIME(MIN.) =   0.42
  Tc(MIN.) =   12.44
  SUBAREA AREA(ACRES) =     3.69       SUBAREA RUNOFF(CFS) =    6.05
  AREA-AVERAGE RUNOFF COEFFICIENT =  0.413
  TOTAL AREA(ACRES) =      171.3         PEAK FLOW RATE(CFS) =     336.74

  END OF SUBAREA CHANNEL FLOW HYDRAULICS:
  DEPTH(FEET) =  3.38   FLOW VELOCITY(FEET/SEC.) =  10.23
  LONGEST FLOWPATH FROM NODE    300.00 TO NODE   3013.00 =    5248.00 FEET.

****************************************************************************
  FLOW PROCESS FROM NODE   3013.00 TO NODE   3013.00 IS CODE =   1
----------------------------------------------------------------------------
  >>>>>DESIGNATE INDEPENDENT STREAM FOR CONFLUENCE<<<<<
============================================================================
  TOTAL NUMBER OF STREAMS =  2
  CONFLUENCE VALUES USED FOR INDEPENDENT STREAM  1 ARE:
  TIME OF CONCENTRATION(MIN.) =   12.44
  RAINFALL INTENSITY(INCH/HR) =   4.68
  TOTAL STREAM AREA(ACRES) =   171.27
  PEAK FLOW RATE(CFS) AT CONFLUENCE =    336.74

****************************************************************************
  FLOW PROCESS FROM NODE   3016.00 TO NODE   3017.00 IS CODE =  21
----------------------------------------------------------------------------
  >>>>>RATIONAL METHOD INITIAL SUBAREA ANALYSIS<<<<<
============================================================================
  *USER SPECIFIED(SUBAREA):
  USER-SPECIFIED RUNOFF COEFFICIENT = .3500
  S.C.S. CURVE NUMBER (AMC II) =   0
  INITIAL SUBAREA FLOW-LENGTH(FEET) =    70.00
  UPSTREAM ELEVATION(FEET) =    708.00
  DOWNSTREAM ELEVATION(FEET) =    688.00
  ELEVATION DIFFERENCE(FEET) =     20.00
  SUBAREA OVERLAND TIME OF FLOW(MIN.) =    5.243
  WARNING: THE MAXIMUM OVERLAND FLOW SLOPE, 10.%, IS USED IN Tc CALCULATION!
   100 YEAR RAINFALL INTENSITY(INCH/HOUR) =  8.177
  SUBAREA RUNOFF(CFS) =      0.69
  TOTAL AREA(ACRES) =      0.24   TOTAL RUNOFF(CFS) =      0.69

****************************************************************************
  FLOW PROCESS FROM NODE   3017.00 TO NODE   3013.00 IS CODE =  51
```

```
----------------------------------------------------------------------------
  >>>>>COMPUTE TRAPEZOIDAL CHANNEL FLOW<<<<<
  >>>>>TRAVELTIME THRU SUBAREA (EXISTING ELEMENT)<<<<<
============================================================================
  ELEVATION DATA: UPSTREAM(FEET) =    688.00  DOWNSTREAM(FEET) =    670.00
  CHANNEL LENGTH THRU SUBAREA(FEET) =   505.00   CHANNEL SLOPE =  0.0356
  CHANNEL BASE(FEET) =    3.00   "Z" FACTOR =   2.000
  MANNING'S FACTOR = 0.030   MAXIMUM DEPTH(FEET) =  10.00
   100 YEAR RAINFALL INTENSITY(INCH/HOUR) =  6.285
  *USER SPECIFIED(SUBAREA):
  USER-SPECIFIED RUNOFF COEFFICIENT = .3500
  S.C.S. CURVE NUMBER (AMC II) =   0
  TRAVEL TIME COMPUTED USING ESTIMATED FLOW(CFS) =       2.65
  TRAVEL TIME THRU SUBAREA BASED ON VELOCITY(FEET/SEC.) =   3.19
  AVERAGE FLOW DEPTH(FEET) =   0.24   TRAVEL TIME(MIN.) =   2.64
  Tc(MIN.) =    7.88
  SUBAREA AREA(ACRES) =     1.76       SUBAREA RUNOFF(CFS) =    3.87
  AREA-AVERAGE RUNOFF COEFFICIENT =  0.350
  TOTAL AREA(ACRES) =        2.0         PEAK FLOW RATE(CFS) =       4.40

  END OF SUBAREA CHANNEL FLOW HYDRAULICS:
  DEPTH(FEET) =  0.32   FLOW VELOCITY(FEET/SEC.) =   3.81
  LONGEST FLOWPATH FROM NODE   3016.00 TO NODE   3013.00 =     575.00 FEET.

****************************************************************************
  FLOW PROCESS FROM NODE   3013.00 TO NODE   3013.00 IS CODE =   1
----------------------------------------------------------------------------
  >>>>>DESIGNATE INDEPENDENT STREAM FOR CONFLUENCE<<<<<
  >>>>>AND COMPUTE VARIOUS CONFLUENCED STREAM VALUES<<<<<
============================================================================
  TOTAL NUMBER OF STREAMS =  2
  CONFLUENCE VALUES USED FOR INDEPENDENT STREAM  2 ARE:
  TIME OF CONCENTRATION(MIN.) =    7.88
  RAINFALL INTENSITY(INCH/HR) =   6.29
  TOTAL STREAM AREA(ACRES) =     2.00
  PEAK FLOW RATE(CFS) AT CONFLUENCE =      4.40

  ** CONFLUENCE DATA **
  STREAM     RUNOFF       Tc      INTENSITY      AREA
  NUMBER      (CFS)     (MIN.)   (INCH/HOUR)    (ACRE)
      1      336.74    12.44        4.684        171.27
      2        4.40     7.88        6.285          2.00

  RAINFALL INTENSITY AND TIME OF CONCENTRATION RATIO
  CONFLUENCE FORMULA USED FOR  2 STREAMS.

  ** PEAK FLOW RATE TABLE **
  STREAM     RUNOFF      Tc      INTENSITY
  NUMBER      (CFS)    (MIN.)   (INCH/HOUR)
      1      255.36     7.88       6.285
      2      340.02    12.44       4.684

  COMPUTED CONFLUENCE ESTIMATES ARE AS FOLLOWS:
  PEAK FLOW RATE(CFS) =     340.02   Tc(MIN.) =   12.44
  TOTAL AREA(ACRES) =      173.3
  LONGEST FLOWPATH FROM NODE    300.00 TO NODE   3013.00 =    5248.00 FEET.
============================================================================
  END OF STUDY SUMMARY:
  TOTAL AREA(ACRES)     =      173.3  TC(MIN.) =     12.44
  PEAK FLOW RATE(CFS)   =     340.02
============================================================================
============================================================================
  END OF RATIONAL METHOD ANALYSIS
```

BASIN D

FUSCOE ENGINEERING
6390 Greenwich Drive, Suite 170
San Diego, California 92122
tel 858.554.1500 ∘ fax 858.597.0335
www.fuscoe.com

Job Name: Valiano Date: Oct 2014
Proposed Hydrology
100 Year Design Storm
Job #: 2690-007-02 Run Name: P-400.DAT

Node to Node		Code	Elev 1 (feet)	Elev 2 (feet)	Length (feet)	C Factor	Area (ac.)	Comments
400	401	2	808	806	100	0.71	0.25	
401	402	6	805.0	793.0	320.0	0.71	1.39	one side
402	403	3	787.0	786.9	10.0			
403	407	3	786.9	780.6	35.0			
407	407	1						1 of 2
404	405	2	797.0	795.0	100.0	0.71	0.14	
405	406	6	795.0	788.0	270.0	0.71	2.31	two sides
406	407	3	784.0	780.6	335.0			
407	407	1						2 of 2
407	408	3	780.6	757.3	390.0			
408	408	1						1 of 2
409	409.1	2	798.0	796.0	100.0	0.71	0.15	
409.1	408	6	796.0	764.5	346.0	0.71	1.95	two sides
408	408	1						2 of 2
408	416	3	757.3	757.0	30.0			
416	416	10						save to bank 1
410	411	2	910.0	872.0	70.0	0.35	0.18	
411	415	5	872.0	762.0	620.0	0.35	1.62	
415	415	1						1 of 2
412	413	2	1,070.0	1,005.0	240.0	0.35	0.32	
413	414	5	1,005.0	788.0	730.0	0.35	8.13	
414	415	3	782.0	757.2	50.0			
415	415	1						2 of 2
415	416	3	757.2	757.0	20.0			
416	416	11						add bank 1
416	416	12						clear bank 1
416	417	3	757.0	755.0	170.0			
417	429.4	3	755.0	722.0	90.0			
429.4	429.4	10						save to bank 1
418	419	2	978.0	964.0	70.0	0.35	0.19	
419	420	5	964.0	780.0	450.0	0.35	2.25	
420	421	3	774.0	749.0	50.0			
421	426	3	749.0	747.6	130.0			
426	426	1						1 of 2

423	424	2	762.0	760.0	100.0	0.35	0.14	
424	425	5	760.0	753.0	230.0	0.35	0.51	
425	426	3	748.4	747.6	75.0			
426	426	1						2 of 2
426	427	3	747.6	746.7	90			
427	427	10						save to bank 2
428	429	2	764.7	762.7	100	0.71	0.13	
429	430	6	762	750	550	0.71	2.81	two sides
430	431	3	747.2	747	15			
431	427	3	747	746.7	30			
427	427	11						add bank 2
427	427	12						clear bank 2
427	429.2	3	746.7	746.3	35			
429.2	429.4	3	746.3	722	350			
429.4	429.4	11						add bank 1
429.4	429.4	12						clear bank 1
429.4	430	5	722	707	200	0.35	1.32	
430	436	5	707	686	530	0.35	1.63	
436	436	10						save to bank 1
432.5	432	2	950	934	115	0.35	0.18	
432	434	5	934	734	560	0.35	1.21	
434	434							1 of 2
432.5	433	2	950	934	90	0.35	0.08	
433	434	5	934	734	550	0.35	1.57	
434	434	1						2 of 2
434	435	5	734	693	790	0.41	7.9	
435	436	5	693	686	410	0.41	0.74	
436	436	11						add bank 1
436	439	5	686	682	260	0.41	3.43	
439	439	1						1 of 2
437	438	2	740	724	100	0.41	0.52	
438	439	5	724	682	560	0.41	5.39	
439	439	1						2 of 2

```
****************************************************************************

            RATIONAL METHOD HYDROLOGY COMPUTER PROGRAM PACKAGE
            Reference: SAN DIEGO COUNTY FLOOD CONTROL DISTRICT
                         2003,1985,1981 HYDROLOGY MANUAL
         (c) Copyright 1982-2012 Advanced Engineering Software (aes)
             Ver. 19.0 Release Date: 06/01/2012  License ID 1355

                           Analysis prepared by:

                             Fuscoe Engineering
                             6390 Greenwich Dr.
                                 Suite 170
                            San Diego, CA 92122

 ************************** DESCRIPTION OF STUDY **************************
* Valiano                                                                 *
* Proposed Hydrology - 400 Series                                         *
* October 20, 2014                                                        *
 **************************************************************************

  FILE NAME: P-400.DAT
  TIME/DATE OF STUDY: 17:16 10/20/2014
----------------------------------------------------------------------------
  USER SPECIFIED HYDROLOGY AND HYDRAULIC MODEL INFORMATION:
----------------------------------------------------------------------------
  2003 SAN DIEGO MANUAL CRITERIA

  USER SPECIFIED STORM EVENT(YEAR) = 100.00
  6-HOUR DURATION PRECIPITATION (INCHES) =   3.200
  SPECIFIED MINIMUM PIPE SIZE(INCH) =  12.00
  SPECIFIED PERCENT OF GRADIENTS(DECIMAL) TO USE FOR FRICTION SLOPE = 0.90
  SAN DIEGO HYDROLOGY MANUAL "C"-VALUES USED FOR RATIONAL METHOD
  NOTE: USE MODIFIED RATIONAL METHOD PROCEDURES FOR CONFLUENCE ANALYSIS
  *USER-DEFINED STREET-SECTIONS FOR COUPLED PIPEFLOW AND STREETFLOW MODEL*
     HALF-  CROWN TO   STREET-CROSSFALL:   CURB  GUTTER-GEOMETRIES:  MANNING
     WIDTH  CROSSFALL  IN-  / OUT-/PARK-  HEIGHT  WIDTH  LIP   HIKE  FACTOR
NO.   (FT)     (FT)    SIDE / SIDE/ WAY    (FT)    (FT)  (FT)  (FT)    (n)
===  =====  =========  =================  ======  ===== ====== ===== =======
  1   16.0      8.0    0.020/0.020/0.020   0.33    0.10 0.0100 0.010 0.0150

  GLOBAL STREET FLOW-DEPTH CONSTRAINTS:
    1. Relative Flow-Depth =  0.33 FEET
       as (Maximum Allowable Street Flow Depth) - (Top-of-Curb)
    2. (Depth)*(Velocity) Constraint =  6.0 (FT*FT/S)
  *SIZE PIPE WITH A FLOW CAPACITY GREATER THAN
   OR EQUAL TO THE UPSTREAM TRIBUTARY PIPE.*

****************************************************************************
  FLOW PROCESS FROM NODE    400.00 TO NODE    401.00 IS CODE =  21
----------------------------------------------------------------------------
  >>>>>RATIONAL METHOD INITIAL SUBAREA ANALYSIS<<<<<
============================================================================
  *USER SPECIFIED(SUBAREA):
  USER-SPECIFIED RUNOFF COEFFICIENT = .7100
  S.C.S. CURVE NUMBER (AMC II) =   0
  INITIAL SUBAREA FLOW-LENGTH(FEET) =   100.00
  UPSTREAM ELEVATION(FEET) =    808.00
  DOWNSTREAM ELEVATION(FEET) =    806.00
  ELEVATION DIFFERENCE(FEET) =      2.00
  SUBAREA OVERLAND TIME OF FLOW(MIN.) =    4.984
  WARNING: INITIAL SUBAREA FLOW PATH LENGTH IS GREATER THAN
```

```
          THE MAXIMUM OVERLAND FLOW LENGTH =    80.00
          (Reference: Table 3-1B of Hydrology Manual)
          THE MAXIMUM OVERLAND FLOW LENGTH IS USED IN Tc CALCULATION!
   100 YEAR RAINFALL INTENSITY(INCH/HOUR) =  8.431
  NOTE: RAINFALL INTENSITY IS BASED ON Tc = 5-MINUTE.
  SUBAREA RUNOFF(CFS) =      1.50
  TOTAL AREA(ACRES) =      0.25   TOTAL RUNOFF(CFS) =      1.50

****************************************************************************
  FLOW PROCESS FROM NODE    401.00 TO NODE    402.00 IS CODE =  62
----------------------------------------------------------------------------
  >>>>>COMPUTE STREET FLOW TRAVEL TIME THRU SUBAREA<<<<<
  >>>>>(STREET TABLE SECTION #  1 USED)<<<<<
============================================================================
  UPSTREAM ELEVATION(FEET) =  805.00  DOWNSTREAM ELEVATION(FEET) =  793.00
  STREET LENGTH(FEET) =   320.00   CURB HEIGHT(INCHES) =  4.0
  STREET HALFWIDTH(FEET) = 16.00

  DISTANCE FROM CROWN TO CROSSFALL GRADEBREAK(FEET) =   8.00
  INSIDE STREET CROSSFALL(DECIMAL) =  0.020
  OUTSIDE STREET CROSSFALL(DECIMAL)  =  0.020

  SPECIFIED NUMBER OF HALFSTREETS CARRYING RUNOFF =  1
  STREET PARKWAY CROSSFALL(DECIMAL)  =  0.020
  Manning's FRICTION FACTOR for Streetflow Section(curb-to-curb) =   0.0150
  Manning's FRICTION FACTOR for Back-of-Walk Flow Section =   0.0150

    **TRAVEL TIME COMPUTED USING ESTIMATED FLOW(CFS) =       5.12
    STREETFLOW MODEL RESULTS USING ESTIMATED FLOW:
    STREET FLOW DEPTH(FEET) =  0.24
    HALFSTREET FLOOD WIDTH(FEET) =   10.91
    AVERAGE FLOW VELOCITY(FEET/SEC.) =    4.30
    PRODUCT OF DEPTH&VELOCITY(FT*FT/SEC.) =    1.02
  STREET FLOW TRAVEL TIME(MIN.) =   1.24   Tc(MIN.) =    6.22
   100 YEAR RAINFALL INTENSITY(INCH/HOUR) =  7.321
  *USER SPECIFIED(SUBAREA):
  USER-SPECIFIED RUNOFF COEFFICIENT = .7100
  S.C.S. CURVE NUMBER (AMC II) =   0
  AREA-AVERAGE RUNOFF COEFFICIENT =  0.710
  SUBAREA AREA(ACRES) =    1.39      SUBAREA RUNOFF(CFS) =    7.23
  TOTAL AREA(ACRES) =        1.6        PEAK FLOW RATE(CFS) =       8.52

  END OF SUBAREA STREET FLOW HYDRAULICS:
  DEPTH(FEET) = 0.28   HALFSTREET FLOOD WIDTH(FEET) =  13.16
  FLOW VELOCITY(FEET/SEC.) =  4.92   DEPTH*VELOCITY(FT*FT/SEC.) =   1.38
  LONGEST FLOWPATH FROM NODE    400.00 TO NODE    402.00 =     420.00 FEET.

****************************************************************************
  FLOW PROCESS FROM NODE    402.00 TO NODE    403.00 IS CODE =  31
----------------------------------------------------------------------------
  >>>>>COMPUTE PIPE-FLOW TRAVEL TIME THRU SUBAREA<<<<<
  >>>>>USING COMPUTER-ESTIMATED PIPESIZE (NON-PRESSURE FLOW)<<<<<
============================================================================
  ELEVATION DATA: UPSTREAM(FEET) =   787.00  DOWNSTREAM(FEET) =   786.90
  FLOW LENGTH(FEET) =    10.00   MANNING'S N =  0.013
  DEPTH OF FLOW IN  18.0 INCH PIPE IS  12.8 INCHES
  PIPE-FLOW VELOCITY(FEET/SEC.) =   6.34
  ESTIMATED PIPE DIAMETER(INCH) =  18.00    NUMBER OF PIPES =   1
  PIPE-FLOW(CFS) =       8.52
  PIPE TRAVEL TIME(MIN.) =   0.03    Tc(MIN.) =    6.25
  LONGEST FLOWPATH FROM NODE    400.00 TO NODE    403.00 =     430.00 FEET.

****************************************************************************
```

```
  FLOW PROCESS FROM NODE    403.00 TO NODE    407.00 IS CODE =  31
----------------------------------------------------------------------------
  >>>>>COMPUTE PIPE-FLOW TRAVEL TIME THRU SUBAREA<<<<<
  >>>>>USING COMPUTER-ESTIMATED PIPESIZE (NON-PRESSURE FLOW)<<<<<
============================================================================
  ELEVATION DATA: UPSTREAM(FEET) =   786.90  DOWNSTREAM(FEET) =   780.60
  FLOW LENGTH(FEET) =    35.00   MANNING'S N =  0.013
  DEPTH OF FLOW IN  12.0 INCH PIPE IS   6.7 INCHES
  PIPE-FLOW VELOCITY(FEET/SEC.) =  19.04
  ESTIMATED PIPE DIAMETER(INCH) =  12.00    NUMBER OF PIPES =   1
  PIPE-FLOW(CFS) =       8.52
  PIPE TRAVEL TIME(MIN.) =   0.03    Tc(MIN.) =    6.28
  LONGEST FLOWPATH FROM NODE    400.00 TO NODE    407.00 =     465.00 FEET.

****************************************************************************
  FLOW PROCESS FROM NODE    407.00 TO NODE    407.00 IS CODE =   1
----------------------------------------------------------------------------
  >>>>>DESIGNATE INDEPENDENT STREAM FOR CONFLUENCE<<<<<
============================================================================
  TOTAL NUMBER OF STREAMS =  2
  CONFLUENCE VALUES USED FOR INDEPENDENT STREAM  1 ARE:
  TIME OF CONCENTRATION(MIN.) =    6.28
  RAINFALL INTENSITY(INCH/HR) =   7.28
  TOTAL STREAM AREA(ACRES) =     1.64
  PEAK FLOW RATE(CFS) AT CONFLUENCE =      8.52

****************************************************************************
  FLOW PROCESS FROM NODE    404.00 TO NODE    405.00 IS CODE =  21
----------------------------------------------------------------------------
  >>>>>RATIONAL METHOD INITIAL SUBAREA ANALYSIS<<<<<
============================================================================
  *USER SPECIFIED(SUBAREA):
  USER-SPECIFIED RUNOFF COEFFICIENT = .7100
  S.C.S. CURVE NUMBER (AMC II) =   0
  INITIAL SUBAREA FLOW-LENGTH(FEET) =   100.00
  UPSTREAM ELEVATION(FEET) =    797.00
  DOWNSTREAM ELEVATION(FEET) =    795.00
  ELEVATION DIFFERENCE(FEET) =      2.00
  SUBAREA OVERLAND TIME OF FLOW(MIN.) =    4.984
  WARNING: INITIAL SUBAREA FLOW PATH LENGTH IS GREATER THAN
           THE MAXIMUM OVERLAND FLOW LENGTH =    80.00
           (Reference: Table 3-1B of Hydrology Manual)
           THE MAXIMUM OVERLAND FLOW LENGTH IS USED IN Tc CALCULATION!
   100 YEAR RAINFALL INTENSITY(INCH/HOUR) =  8.431
  NOTE: RAINFALL INTENSITY IS BASED ON Tc = 5-MINUTE.
  SUBAREA RUNOFF(CFS) =      0.84
  TOTAL AREA(ACRES) =      0.14   TOTAL RUNOFF(CFS) =      0.84

****************************************************************************
  FLOW PROCESS FROM NODE    405.00 TO NODE    406.00 IS CODE =  62
----------------------------------------------------------------------------
  >>>>>COMPUTE STREET FLOW TRAVEL TIME THRU SUBAREA<<<<<
  >>>>>(STREET TABLE SECTION #  1 USED)<<<<<
============================================================================
  UPSTREAM ELEVATION(FEET) =  795.00  DOWNSTREAM ELEVATION(FEET) =  788.00
  STREET LENGTH(FEET) =   270.00   CURB HEIGHT(INCHES) =  4.0
  STREET HALFWIDTH(FEET) = 16.00

  DISTANCE FROM CROWN TO CROSSFALL GRADEBREAK(FEET) =   8.00
  INSIDE STREET CROSSFALL(DECIMAL) =  0.020
  OUTSIDE STREET CROSSFALL(DECIMAL)  =  0.020

  SPECIFIED NUMBER OF HALFSTREETS CARRYING RUNOFF =  2
```

```
  STREET PARKWAY CROSSFALL(DECIMAL)  =  0.020
  Manning's FRICTION FACTOR for Streetflow Section(curb-to-curb) =   0.0150
  Manning's FRICTION FACTOR for Back-of-Walk Flow Section =   0.0150

    **TRAVEL TIME COMPUTED USING ESTIMATED FLOW(CFS) =       6.81
    STREETFLOW MODEL RESULTS USING ESTIMATED FLOW:
    STREET FLOW DEPTH(FEET) =  0.22
    HALFSTREET FLOOD WIDTH(FEET) =   10.03
    AVERAGE FLOW VELOCITY(FEET/SEC.) =    3.38
    PRODUCT OF DEPTH&VELOCITY(FT*FT/SEC.) =    0.74
  STREET FLOW TRAVEL TIME(MIN.) =   1.33   Tc(MIN.) =    6.32
   100 YEAR RAINFALL INTENSITY(INCH/HOUR) =  7.252
  *USER SPECIFIED(SUBAREA):
  USER-SPECIFIED RUNOFF COEFFICIENT = .7100
  S.C.S. CURVE NUMBER (AMC II) =   0
  AREA-AVERAGE RUNOFF COEFFICIENT =  0.710
  SUBAREA AREA(ACRES) =    2.31      SUBAREA RUNOFF(CFS) =   11.89
  TOTAL AREA(ACRES) =        2.5        PEAK FLOW RATE(CFS) =      12.62

  END OF SUBAREA STREET FLOW HYDRAULICS:
  DEPTH(FEET) = 0.27   HALFSTREET FLOOD WIDTH(FEET) =  12.59
  FLOW VELOCITY(FEET/SEC.) =  3.97   DEPTH*VELOCITY(FT*FT/SEC.) =   1.07
  LONGEST FLOWPATH FROM NODE    404.00 TO NODE    406.00 =     370.00 FEET.

****************************************************************************
  FLOW PROCESS FROM NODE    406.00 TO NODE    407.00 IS CODE =  31
----------------------------------------------------------------------------
  >>>>>COMPUTE PIPE-FLOW TRAVEL TIME THRU SUBAREA<<<<<
  >>>>>USING COMPUTER-ESTIMATED PIPESIZE (NON-PRESSURE FLOW)<<<<<
============================================================================
  ELEVATION DATA: UPSTREAM(FEET) =   784.00  DOWNSTREAM(FEET) =   780.60
  FLOW LENGTH(FEET) =   335.00   MANNING'S N =  0.013
  DEPTH OF FLOW IN  21.0 INCH PIPE IS  14.6 INCHES
  PIPE-FLOW VELOCITY(FEET/SEC.) =   7.04
  ESTIMATED PIPE DIAMETER(INCH) =  21.00    NUMBER OF PIPES =   1
  PIPE-FLOW(CFS) =      12.62
  PIPE TRAVEL TIME(MIN.) =   0.79    Tc(MIN.) =    7.11
  LONGEST FLOWPATH FROM NODE    404.00 TO NODE    407.00 =     705.00 FEET.

****************************************************************************
  FLOW PROCESS FROM NODE    407.00 TO NODE    407.00 IS CODE =   1
----------------------------------------------------------------------------
  >>>>>DESIGNATE INDEPENDENT STREAM FOR CONFLUENCE<<<<<
  >>>>>AND COMPUTE VARIOUS CONFLUENCED STREAM VALUES<<<<<
============================================================================
  TOTAL NUMBER OF STREAMS =  2
  CONFLUENCE VALUES USED FOR INDEPENDENT STREAM  2 ARE:
  TIME OF CONCENTRATION(MIN.) =    7.11
  RAINFALL INTENSITY(INCH/HR) =   6.72
  TOTAL STREAM AREA(ACRES) =     2.45
  PEAK FLOW RATE(CFS) AT CONFLUENCE =     12.62

  ** CONFLUENCE DATA **
  STREAM     RUNOFF       Tc      INTENSITY      AREA
  NUMBER      (CFS)     (MIN.)   (INCH/HOUR)    (ACRE)
      1        8.52     6.28        7.278          1.64
      2       12.62     7.11        6.720          2.45

  RAINFALL INTENSITY AND TIME OF CONCENTRATION RATIO
  CONFLUENCE FORMULA USED FOR  2 STREAMS.

  ** PEAK FLOW RATE TABLE **
  STREAM     RUNOFF      Tc      INTENSITY
```

```
  NUMBER      (CFS)    (MIN.)   (INCH/HOUR)
      1       19.67     6.28       7.278
      2       20.49     7.11       6.720

  COMPUTED CONFLUENCE ESTIMATES ARE AS FOLLOWS:
  PEAK FLOW RATE(CFS) =      20.49   Tc(MIN.) =    7.11
  TOTAL AREA(ACRES) =        4.1
  LONGEST FLOWPATH FROM NODE    404.00 TO NODE    407.00 =     705.00 FEET.

****************************************************************************
  FLOW PROCESS FROM NODE    407.00 TO NODE    408.00 IS CODE =  31
----------------------------------------------------------------------------
  >>>>>COMPUTE PIPE-FLOW TRAVEL TIME THRU SUBAREA<<<<<
  >>>>>USING COMPUTER-ESTIMATED PIPESIZE (NON-PRESSURE FLOW)<<<<<
============================================================================
  ELEVATION DATA: UPSTREAM(FEET) =   780.60  DOWNSTREAM(FEET) =   757.30
  FLOW LENGTH(FEET) =   390.00   MANNING'S N =  0.013
  DEPTH OF FLOW IN  18.0 INCH PIPE IS  12.6 INCHES
  PIPE-FLOW VELOCITY(FEET/SEC.) =  15.45
  ESTIMATED PIPE DIAMETER(INCH) =  18.00    NUMBER OF PIPES =   1
  PIPE-FLOW(CFS) =      20.49
  PIPE TRAVEL TIME(MIN.) =   0.42    Tc(MIN.) =    7.53
  LONGEST FLOWPATH FROM NODE    404.00 TO NODE    408.00 =    1095.00 FEET.

****************************************************************************
  FLOW PROCESS FROM NODE    408.00 TO NODE    408.00 IS CODE =   1
----------------------------------------------------------------------------
  >>>>>DESIGNATE INDEPENDENT STREAM FOR CONFLUENCE<<<<<
============================================================================
  TOTAL NUMBER OF STREAMS =  2
  CONFLUENCE VALUES USED FOR INDEPENDENT STREAM  1 ARE:
  TIME OF CONCENTRATION(MIN.) =    7.53
  RAINFALL INTENSITY(INCH/HR) =   6.47
  TOTAL STREAM AREA(ACRES) =     4.09
  PEAK FLOW RATE(CFS) AT CONFLUENCE =     20.49

****************************************************************************
  FLOW PROCESS FROM NODE    409.00 TO NODE    409.10 IS CODE =  21
----------------------------------------------------------------------------
  >>>>>RATIONAL METHOD INITIAL SUBAREA ANALYSIS<<<<<
============================================================================
  *USER SPECIFIED(SUBAREA):
  USER-SPECIFIED RUNOFF COEFFICIENT = .7100
  S.C.S. CURVE NUMBER (AMC II) =   0
  INITIAL SUBAREA FLOW-LENGTH(FEET) =   100.00
  UPSTREAM ELEVATION(FEET) =    798.00
  DOWNSTREAM ELEVATION(FEET) =    796.00
  ELEVATION DIFFERENCE(FEET) =      2.00
  SUBAREA OVERLAND TIME OF FLOW(MIN.) =    4.825
  WARNING: INITIAL SUBAREA FLOW PATH LENGTH IS GREATER THAN
           THE MAXIMUM OVERLAND FLOW LENGTH =    75.00
           (Reference: Table 3-1B of Hydrology Manual)
           THE MAXIMUM OVERLAND FLOW LENGTH IS USED IN Tc CALCULATION!
   100 YEAR RAINFALL INTENSITY(INCH/HOUR) =  8.431
  NOTE: RAINFALL INTENSITY IS BASED ON Tc = 5-MINUTE.
  SUBAREA RUNOFF(CFS) =      0.90
  TOTAL AREA(ACRES) =      0.15   TOTAL RUNOFF(CFS) =      0.90

****************************************************************************
  FLOW PROCESS FROM NODE    409.10 TO NODE    408.00 IS CODE =  62
----------------------------------------------------------------------------
  >>>>>COMPUTE STREET FLOW TRAVEL TIME THRU SUBAREA<<<<<
  >>>>>(STREET TABLE SECTION #  1 USED)<<<<<
```

```
==============================================================================
  UPSTREAM ELEVATION(FEET) =  796.00  DOWNSTREAM ELEVATION(FEET) =  764.50
  STREET LENGTH(FEET) =   346.00   CURB HEIGHT(INCHES) =  4.0
  STREET HALFWIDTH(FEET) = 16.00

  DISTANCE FROM CROWN TO CROSSFALL GRADEBREAK(FEET) =   8.00
  INSIDE STREET CROSSFALL(DECIMAL) =  0.020
  OUTSIDE STREET CROSSFALL(DECIMAL)  =  0.020

  SPECIFIED NUMBER OF HALFSTREETS CARRYING RUNOFF =  2
  STREET PARKWAY CROSSFALL(DECIMAL)  =  0.020
  Manning's FRICTION FACTOR for Streetflow Section(curb-to-curb) =   0.0150
  Manning's FRICTION FACTOR for Back-of-Walk Flow Section =   0.0150

    **TRAVEL TIME COMPUTED USING ESTIMATED FLOW(CFS) =       6.14
    STREETFLOW MODEL RESULTS USING ESTIMATED FLOW:
    STREET FLOW DEPTH(FEET) =  0.17
    HALFSTREET FLOOD WIDTH(FEET) =    7.60
    AVERAGE FLOW VELOCITY(FEET/SEC.) =    5.31
    PRODUCT OF DEPTH&VELOCITY(FT*FT/SEC.) =    0.90
  STREET FLOW TRAVEL TIME(MIN.) =   1.09   Tc(MIN.) =    5.91
   100 YEAR RAINFALL INTENSITY(INCH/HOUR) =  7.568
  *USER SPECIFIED(SUBAREA):
  USER-SPECIFIED RUNOFF COEFFICIENT = .7100
  S.C.S. CURVE NUMBER (AMC II) =   0
  AREA-AVERAGE RUNOFF COEFFICIENT =  0.710
  SUBAREA AREA(ACRES) =    1.95      SUBAREA RUNOFF(CFS) =   10.48
  TOTAL AREA(ACRES) =        2.1        PEAK FLOW RATE(CFS) =      11.28

  END OF SUBAREA STREET FLOW HYDRAULICS:
  DEPTH(FEET) = 0.21   HALFSTREET FLOOD WIDTH(FEET) =   9.53
  FLOW VELOCITY(FEET/SEC.) =  6.20   DEPTH*VELOCITY(FT*FT/SEC.) =   1.29
  LONGEST FLOWPATH FROM NODE    409.00 TO NODE    408.00 =     446.00 FEET.

****************************************************************************
  FLOW PROCESS FROM NODE    408.00 TO NODE    408.00 IS CODE =   1
----------------------------------------------------------------------------
  >>>>>DESIGNATE INDEPENDENT STREAM FOR CONFLUENCE<<<<<
  >>>>>AND COMPUTE VARIOUS CONFLUENCED STREAM VALUES<<<<<
==============================================================================
  TOTAL NUMBER OF STREAMS =  2
  CONFLUENCE VALUES USED FOR INDEPENDENT STREAM  2 ARE:
  TIME OF CONCENTRATION(MIN.) =    5.91
  RAINFALL INTENSITY(INCH/HR) =   7.57
  TOTAL STREAM AREA(ACRES) =     2.10
  PEAK FLOW RATE(CFS) AT CONFLUENCE =     11.28

  ** CONFLUENCE DATA **
  STREAM     RUNOFF       Tc      INTENSITY      AREA
  NUMBER      (CFS)     (MIN.)   (INCH/HOUR)    (ACRE)
      1       20.49     7.53        6.475          4.09
      2       11.28     5.91        7.568          2.10

  RAINFALL INTENSITY AND TIME OF CONCENTRATION RATIO
  CONFLUENCE FORMULA USED FOR  2 STREAMS.

  ** PEAK FLOW RATE TABLE **
  STREAM     RUNOFF      Tc      INTENSITY
  NUMBER      (CFS)    (MIN.)   (INCH/HOUR)
      1       28.81     5.91       7.568
      2       30.14     7.53       6.475

  COMPUTED CONFLUENCE ESTIMATES ARE AS FOLLOWS:
```

```
  PEAK FLOW RATE(CFS) =      30.14   Tc(MIN.) =    7.53
  TOTAL AREA(ACRES) =        6.2
  LONGEST FLOWPATH FROM NODE    404.00 TO NODE    408.00 =    1095.00 FEET.

****************************************************************************
  FLOW PROCESS FROM NODE    408.00 TO NODE    416.00 IS CODE =  31
----------------------------------------------------------------------------
  >>>>>COMPUTE PIPE-FLOW TRAVEL TIME THRU SUBAREA<<<<<
  >>>>>USING COMPUTER-ESTIMATED PIPESIZE (NON-PRESSURE FLOW)<<<<<
============================================================================
  ELEVATION DATA: UPSTREAM(FEET) =   757.30  DOWNSTREAM(FEET) =   757.00
  FLOW LENGTH(FEET) =    30.00   MANNING'S N =  0.013
  DEPTH OF FLOW IN  30.0 INCH PIPE IS  19.8 INCHES
  PIPE-FLOW VELOCITY(FEET/SEC.) =   8.75
  ESTIMATED PIPE DIAMETER(INCH) =  30.00    NUMBER OF PIPES =   1
  PIPE-FLOW(CFS) =      30.14
  PIPE TRAVEL TIME(MIN.) =   0.06    Tc(MIN.) =    7.59
  LONGEST FLOWPATH FROM NODE    404.00 TO NODE    416.00 =    1125.00 FEET.

****************************************************************************
  FLOW PROCESS FROM NODE    416.00 TO NODE    416.00 IS CODE =  10
----------------------------------------------------------------------------
  >>>>>MAIN-STREAM MEMORY COPIED ONTO MEMORY BANK # 1 <<<<<
============================================================================

****************************************************************************
  FLOW PROCESS FROM NODE    410.00 TO NODE    411.00 IS CODE =  21
----------------------------------------------------------------------------
  >>>>>RATIONAL METHOD INITIAL SUBAREA ANALYSIS<<<<<
============================================================================
  *USER SPECIFIED(SUBAREA):
  USER-SPECIFIED RUNOFF COEFFICIENT = .3500
  S.C.S. CURVE NUMBER (AMC II) =   0
  INITIAL SUBAREA FLOW-LENGTH(FEET) =    70.00
  UPSTREAM ELEVATION(FEET) =    910.00
  DOWNSTREAM ELEVATION(FEET) =    872.00
  ELEVATION DIFFERENCE(FEET) =     38.00
  SUBAREA OVERLAND TIME OF FLOW(MIN.) =    5.243
  WARNING: THE MAXIMUM OVERLAND FLOW SLOPE, 10.%, IS USED IN Tc CALCULATION!
   100 YEAR RAINFALL INTENSITY(INCH/HOUR) =  8.177
  SUBAREA RUNOFF(CFS) =      0.52
  TOTAL AREA(ACRES) =      0.18   TOTAL RUNOFF(CFS) =      0.52

****************************************************************************
  FLOW PROCESS FROM NODE    411.00 TO NODE    415.00 IS CODE =  51
----------------------------------------------------------------------------
  >>>>>COMPUTE TRAPEZOIDAL CHANNEL FLOW<<<<<
  >>>>>TRAVELTIME THRU SUBAREA (EXISTING ELEMENT)<<<<<
============================================================================
  ELEVATION DATA: UPSTREAM(FEET) =    872.00  DOWNSTREAM(FEET) =    762.00
  CHANNEL LENGTH THRU SUBAREA(FEET) =   620.00   CHANNEL SLOPE =  0.1774
  CHANNEL BASE(FEET) =    3.00   "Z" FACTOR =   2.000
  MANNING'S FACTOR = 0.030   MAXIMUM DEPTH(FEET) =  10.00
   100 YEAR RAINFALL INTENSITY(INCH/HOUR) =  6.659
  *USER SPECIFIED(SUBAREA):
  USER-SPECIFIED RUNOFF COEFFICIENT = .3500
  S.C.S. CURVE NUMBER (AMC II) =   0
  TRAVEL TIME COMPUTED USING ESTIMATED FLOW(CFS) =       2.42
  TRAVEL TIME THRU SUBAREA BASED ON VELOCITY(FEET/SEC.) =   5.26
  AVERAGE FLOW DEPTH(FEET) =   0.14   TRAVEL TIME(MIN.) =   1.97
  Tc(MIN.) =    7.21
  SUBAREA AREA(ACRES) =     1.62       SUBAREA RUNOFF(CFS) =    3.78
  AREA-AVERAGE RUNOFF COEFFICIENT =  0.350
```

```
  TOTAL AREA(ACRES) =        1.8         PEAK FLOW RATE(CFS) =       4.20

  END OF SUBAREA CHANNEL FLOW HYDRAULICS:
  DEPTH(FEET) =  0.19   FLOW VELOCITY(FEET/SEC.) =   6.40
  LONGEST FLOWPATH FROM NODE    410.00 TO NODE    415.00 =     690.00 FEET.

****************************************************************************
  FLOW PROCESS FROM NODE    415.00 TO NODE    415.00 IS CODE =   1
----------------------------------------------------------------------------
  >>>>>DESIGNATE INDEPENDENT STREAM FOR CONFLUENCE<<<<<
============================================================================
  TOTAL NUMBER OF STREAMS =  2
  CONFLUENCE VALUES USED FOR INDEPENDENT STREAM  1 ARE:
  TIME OF CONCENTRATION(MIN.) =    7.21
  RAINFALL INTENSITY(INCH/HR) =   6.66
  TOTAL STREAM AREA(ACRES) =     1.80
  PEAK FLOW RATE(CFS) AT CONFLUENCE =      4.20

****************************************************************************
  FLOW PROCESS FROM NODE    412.00 TO NODE    413.00 IS CODE =  21
----------------------------------------------------------------------------
  >>>>>RATIONAL METHOD INITIAL SUBAREA ANALYSIS<<<<<
============================================================================
  *USER SPECIFIED(SUBAREA):
  USER-SPECIFIED RUNOFF COEFFICIENT = .3500
  S.C.S. CURVE NUMBER (AMC II) =   0
  INITIAL SUBAREA FLOW-LENGTH(FEET) =   240.00
  UPSTREAM ELEVATION(FEET) =   1070.00
  DOWNSTREAM ELEVATION(FEET) =   1005.00
  ELEVATION DIFFERENCE(FEET) =     65.00
  SUBAREA OVERLAND TIME OF FLOW(MIN.) =    6.267
  WARNING: INITIAL SUBAREA FLOW PATH LENGTH IS GREATER THAN
           THE MAXIMUM OVERLAND FLOW LENGTH =   100.00
           (Reference: Table 3-1B of Hydrology Manual)
           THE MAXIMUM OVERLAND FLOW LENGTH IS USED IN Tc CALCULATION!
   100 YEAR RAINFALL INTENSITY(INCH/HOUR) =  7.288
  SUBAREA RUNOFF(CFS) =      0.82
  TOTAL AREA(ACRES) =      0.32   TOTAL RUNOFF(CFS) =      0.82

****************************************************************************
  FLOW PROCESS FROM NODE    413.00 TO NODE    414.00 IS CODE =  51
----------------------------------------------------------------------------
  >>>>>COMPUTE TRAPEZOIDAL CHANNEL FLOW<<<<<
  >>>>>TRAVELTIME THRU SUBAREA (EXISTING ELEMENT)<<<<<
============================================================================
  ELEVATION DATA: UPSTREAM(FEET) =   1005.00  DOWNSTREAM(FEET) =    788.00
  CHANNEL LENGTH THRU SUBAREA(FEET) =   730.00   CHANNEL SLOPE =  0.2973
  CHANNEL BASE(FEET) =    3.00   "Z" FACTOR =   2.000
  MANNING'S FACTOR = 0.030   MAXIMUM DEPTH(FEET) =  10.00
   100 YEAR RAINFALL INTENSITY(INCH/HOUR) =  6.517
  *USER SPECIFIED(SUBAREA):
  USER-SPECIFIED RUNOFF COEFFICIENT = .3500
  S.C.S. CURVE NUMBER (AMC II) =   0
  TRAVEL TIME COMPUTED USING ESTIMATED FLOW(CFS) =      10.12
  TRAVEL TIME THRU SUBAREA BASED ON VELOCITY(FEET/SEC.) =  10.26
  AVERAGE FLOW DEPTH(FEET) =   0.28   TRAVEL TIME(MIN.) =   1.19
  Tc(MIN.) =    7.45
  SUBAREA AREA(ACRES) =     8.13       SUBAREA RUNOFF(CFS) =   18.55
  AREA-AVERAGE RUNOFF COEFFICIENT =  0.350
  TOTAL AREA(ACRES) =        8.4         PEAK FLOW RATE(CFS) =      19.27

  END OF SUBAREA CHANNEL FLOW HYDRAULICS:
  DEPTH(FEET) =  0.40   FLOW VELOCITY(FEET/SEC.) =  12.62
```

```
  LONGEST FLOWPATH FROM NODE    412.00 TO NODE    414.00 =     970.00 FEET.

****************************************************************************
  FLOW PROCESS FROM NODE    414.00 TO NODE    415.00 IS CODE =  31
----------------------------------------------------------------------------
  >>>>>COMPUTE PIPE-FLOW TRAVEL TIME THRU SUBAREA<<<<<
  >>>>>USING COMPUTER-ESTIMATED PIPESIZE (NON-PRESSURE FLOW)<<<<<
============================================================================
  ELEVATION DATA: UPSTREAM(FEET) =   782.00  DOWNSTREAM(FEET) =   757.20
  FLOW LENGTH(FEET) =    50.00   MANNING'S N =  0.013
  DEPTH OF FLOW IN  12.0 INCH PIPE IS   8.2 INCHES
  PIPE-FLOW VELOCITY(FEET/SEC.) =  33.74
  ESTIMATED PIPE DIAMETER(INCH) =  12.00    NUMBER OF PIPES =   1
  PIPE-FLOW(CFS) =      19.27
  PIPE TRAVEL TIME(MIN.) =   0.02    Tc(MIN.) =    7.48
  LONGEST FLOWPATH FROM NODE    412.00 TO NODE    415.00 =    1020.00 FEET.

****************************************************************************
  FLOW PROCESS FROM NODE    415.00 TO NODE    415.00 IS CODE =   1
----------------------------------------------------------------------------
  >>>>>DESIGNATE INDEPENDENT STREAM FOR CONFLUENCE<<<<<
  >>>>>AND COMPUTE VARIOUS CONFLUENCED STREAM VALUES<<<<<
============================================================================
  TOTAL NUMBER OF STREAMS =  2
  CONFLUENCE VALUES USED FOR INDEPENDENT STREAM  2 ARE:
  TIME OF CONCENTRATION(MIN.) =    7.48
  RAINFALL INTENSITY(INCH/HR) =   6.50
  TOTAL STREAM AREA(ACRES) =     8.45
  PEAK FLOW RATE(CFS) AT CONFLUENCE =     19.27

  ** CONFLUENCE DATA **
  STREAM     RUNOFF       Tc      INTENSITY      AREA
  NUMBER      (CFS)     (MIN.)   (INCH/HOUR)    (ACRE)
      1        4.20     7.21        6.659          1.80
      2       19.27     7.48        6.503          8.45

  RAINFALL INTENSITY AND TIME OF CONCENTRATION RATIO
  CONFLUENCE FORMULA USED FOR  2 STREAMS.

  ** PEAK FLOW RATE TABLE **
  STREAM     RUNOFF      Tc      INTENSITY
  NUMBER      (CFS)    (MIN.)   (INCH/HOUR)
      1       22.78     7.21       6.659
      2       23.37     7.48       6.503

  COMPUTED CONFLUENCE ESTIMATES ARE AS FOLLOWS:
  PEAK FLOW RATE(CFS) =      23.37   Tc(MIN.) =    7.48
  TOTAL AREA(ACRES) =       10.2
  LONGEST FLOWPATH FROM NODE    412.00 TO NODE    415.00 =    1020.00 FEET.

****************************************************************************
  FLOW PROCESS FROM NODE    415.00 TO NODE    416.00 IS CODE =  31
----------------------------------------------------------------------------
  >>>>>COMPUTE PIPE-FLOW TRAVEL TIME THRU SUBAREA<<<<<
  >>>>>USING COMPUTER-ESTIMATED PIPESIZE (NON-PRESSURE FLOW)<<<<<
============================================================================
  ELEVATION DATA: UPSTREAM(FEET) =   757.20  DOWNSTREAM(FEET) =   757.00
  FLOW LENGTH(FEET) =    20.00   MANNING'S N =  0.013
  DEPTH OF FLOW IN  27.0 INCH PIPE IS  18.2 INCHES
  PIPE-FLOW VELOCITY(FEET/SEC.) =   8.20
  ESTIMATED PIPE DIAMETER(INCH) =  27.00    NUMBER OF PIPES =   1
  PIPE-FLOW(CFS) =      23.37
  PIPE TRAVEL TIME(MIN.) =   0.04    Tc(MIN.) =    7.52
```

```
  LONGEST FLOWPATH FROM NODE    412.00 TO NODE    416.00 =    1040.00 FEET.

****************************************************************************
  FLOW PROCESS FROM NODE    416.00 TO NODE    416.00 IS CODE =  11
----------------------------------------------------------------------------
  >>>>>CONFLUENCE MEMORY BANK # 1 WITH THE MAIN-STREAM MEMORY<<<<<
============================================================================

  ** MAIN STREAM CONFLUENCE DATA **
  STREAM     RUNOFF      Tc      INTENSITY     AREA
  NUMBER      (CFS)    (MIN.)   (INCH/HOUR)   (ACRE)
      1       23.37     7.52       6.481       10.25
  LONGEST FLOWPATH FROM NODE    412.00 TO NODE    416.00 =    1040.00 FEET.

  ** MEMORY BANK #  1 CONFLUENCE DATA **
  STREAM     RUNOFF      Tc      INTENSITY     AREA
  NUMBER      (CFS)    (MIN.)   (INCH/HOUR)   (ACRE)
      1       30.14     7.59       6.443        6.19
  LONGEST FLOWPATH FROM NODE    404.00 TO NODE    416.00 =    1125.00 FEET.

  ** PEAK FLOW RATE TABLE **
  STREAM    RUNOFF       Tc      INTENSITY
  NUMBER     (CFS)     (MIN.)   (INCH/HOUR)
      1      53.24       7.52        6.481
      2      53.38       7.59        6.443

  COMPUTED CONFLUENCE ESTIMATES ARE AS FOLLOWS:
  PEAK FLOW RATE(CFS) =      53.38   Tc(MIN.) =    7.59
  TOTAL AREA(ACRES) =       16.4

****************************************************************************
  FLOW PROCESS FROM NODE    416.00 TO NODE    416.00 IS CODE =  12
----------------------------------------------------------------------------
  >>>>>CLEAR MEMORY BANK # 1 <<<<<
============================================================================

****************************************************************************
  FLOW PROCESS FROM NODE    416.00 TO NODE    417.00 IS CODE =  31
----------------------------------------------------------------------------
  >>>>>COMPUTE PIPE-FLOW TRAVEL TIME THRU SUBAREA<<<<<
  >>>>>USING COMPUTER-ESTIMATED PIPESIZE (NON-PRESSURE FLOW)<<<<<
============================================================================
  ELEVATION DATA: UPSTREAM(FEET) =   757.00  DOWNSTREAM(FEET) =   755.00
  FLOW LENGTH(FEET) =   170.00   MANNING'S N =  0.013
  DEPTH OF FLOW IN  33.0 INCH PIPE IS  26.5 INCHES
  PIPE-FLOW VELOCITY(FEET/SEC.) =  10.44
  ESTIMATED PIPE DIAMETER(INCH) =  33.00    NUMBER OF PIPES =   1
  PIPE-FLOW(CFS) =      53.38
  PIPE TRAVEL TIME(MIN.) =   0.27    Tc(MIN.) =    7.86
  LONGEST FLOWPATH FROM NODE    404.00 TO NODE    417.00 =    1295.00 FEET.

****************************************************************************
  FLOW PROCESS FROM NODE    417.00 TO NODE    429.40 IS CODE =  31
----------------------------------------------------------------------------
  >>>>>COMPUTE PIPE-FLOW TRAVEL TIME THRU SUBAREA<<<<<
  >>>>>USING COMPUTER-ESTIMATED PIPESIZE (NON-PRESSURE FLOW)<<<<<
============================================================================
  ELEVATION DATA: UPSTREAM(FEET) =   755.00  DOWNSTREAM(FEET) =   722.00
  FLOW LENGTH(FEET) =    90.00   MANNING'S N =  0.013
  DEPTH OF FLOW IN  18.0 INCH PIPE IS  13.2 INCHES
  PIPE-FLOW VELOCITY(FEET/SEC.) =  38.56
  ESTIMATED PIPE DIAMETER(INCH) =  18.00    NUMBER OF PIPES =   1
  PIPE-FLOW(CFS) =      53.38
```

```
  PIPE TRAVEL TIME(MIN.) =   0.04    Tc(MIN.) =    7.90
  LONGEST FLOWPATH FROM NODE    404.00 TO NODE    429.40 =    1385.00 FEET.

****************************************************************************
  FLOW PROCESS FROM NODE    429.40 TO NODE    429.40 IS CODE =  10
----------------------------------------------------------------------------
  >>>>>MAIN-STREAM MEMORY COPIED ONTO MEMORY BANK # 1 <<<<<
============================================================================

****************************************************************************
  FLOW PROCESS FROM NODE    418.00 TO NODE    419.00 IS CODE =  21
----------------------------------------------------------------------------
  >>>>>RATIONAL METHOD INITIAL SUBAREA ANALYSIS<<<<<
============================================================================
  *USER SPECIFIED(SUBAREA):
  USER-SPECIFIED RUNOFF COEFFICIENT = .3500
  S.C.S. CURVE NUMBER (AMC II) =   0
  INITIAL SUBAREA FLOW-LENGTH(FEET) =    70.00
  UPSTREAM ELEVATION(FEET) =    978.00
  DOWNSTREAM ELEVATION(FEET) =    964.00
  ELEVATION DIFFERENCE(FEET) =     14.00
  SUBAREA OVERLAND TIME OF FLOW(MIN.) =    5.243
  WARNING: THE MAXIMUM OVERLAND FLOW SLOPE, 10.%, IS USED IN Tc CALCULATION!
   100 YEAR RAINFALL INTENSITY(INCH/HOUR) =  8.177
  SUBAREA RUNOFF(CFS) =      0.54
  TOTAL AREA(ACRES) =      0.19   TOTAL RUNOFF(CFS) =      0.54

****************************************************************************
  FLOW PROCESS FROM NODE    419.00 TO NODE    420.00 IS CODE =  51
----------------------------------------------------------------------------
  >>>>>COMPUTE TRAPEZOIDAL CHANNEL FLOW<<<<<
  >>>>>TRAVELTIME THRU SUBAREA (EXISTING ELEMENT)<<<<<
============================================================================
  ELEVATION DATA: UPSTREAM(FEET) =    964.00  DOWNSTREAM(FEET) =    780.00
  CHANNEL LENGTH THRU SUBAREA(FEET) =   450.00   CHANNEL SLOPE =  0.4089
  CHANNEL BASE(FEET) =    3.00   "Z" FACTOR =   2.000
  MANNING'S FACTOR = 0.030   MAXIMUM DEPTH(FEET) =  10.00
   100 YEAR RAINFALL INTENSITY(INCH/HOUR) =  7.338
  *USER SPECIFIED(SUBAREA):
  USER-SPECIFIED RUNOFF COEFFICIENT = .3500
  S.C.S. CURVE NUMBER (AMC II) =   0
  TRAVEL TIME COMPUTED USING ESTIMATED FLOW(CFS) =       3.44
  TRAVEL TIME THRU SUBAREA BASED ON VELOCITY(FEET/SEC.) =   7.83
  AVERAGE FLOW DEPTH(FEET) =   0.13   TRAVEL TIME(MIN.) =   0.96
  Tc(MIN.) =    6.20
  SUBAREA AREA(ACRES) =     2.25       SUBAREA RUNOFF(CFS) =    5.78
  AREA-AVERAGE RUNOFF COEFFICIENT =  0.350
  TOTAL AREA(ACRES) =        2.4         PEAK FLOW RATE(CFS) =       6.27

  END OF SUBAREA CHANNEL FLOW HYDRAULICS:
  DEPTH(FEET) =  0.19   FLOW VELOCITY(FEET/SEC.) =   9.56
  LONGEST FLOWPATH FROM NODE    418.00 TO NODE    420.00 =     520.00 FEET.

****************************************************************************
  FLOW PROCESS FROM NODE    420.00 TO NODE    421.00 IS CODE =  31
----------------------------------------------------------------------------
  >>>>>COMPUTE PIPE-FLOW TRAVEL TIME THRU SUBAREA<<<<<
  >>>>>USING COMPUTER-ESTIMATED PIPESIZE (NON-PRESSURE FLOW)<<<<<
============================================================================
  ELEVATION DATA: UPSTREAM(FEET) =   774.00  DOWNSTREAM(FEET) =   749.00
  FLOW LENGTH(FEET) =    50.00   MANNING'S N =  0.013
  ESTIMATED PIPE DIAMETER(INCH) INCREASED TO 12.000
  DEPTH OF FLOW IN  12.0 INCH PIPE IS   4.2 INCHES
```

```
  PIPE-FLOW VELOCITY(FEET/SEC.) =  25.64
  ESTIMATED PIPE DIAMETER(INCH) =  12.00    NUMBER OF PIPES =   1
  PIPE-FLOW(CFS) =       6.27
  PIPE TRAVEL TIME(MIN.) =   0.03    Tc(MIN.) =    6.23
  LONGEST FLOWPATH FROM NODE    418.00 TO NODE    421.00 =     570.00 FEET.

****************************************************************************
  FLOW PROCESS FROM NODE    421.00 TO NODE    426.00 IS CODE =  31
----------------------------------------------------------------------------
  >>>>>COMPUTE PIPE-FLOW TRAVEL TIME THRU SUBAREA<<<<<
  >>>>>USING COMPUTER-ESTIMATED PIPESIZE (NON-PRESSURE FLOW)<<<<<
============================================================================
  ELEVATION DATA: UPSTREAM(FEET) =   749.00  DOWNSTREAM(FEET) =   747.60
  FLOW LENGTH(FEET) =   130.00   MANNING'S N =  0.013
  DEPTH OF FLOW IN  15.0 INCH PIPE IS  12.1 INCHES
  PIPE-FLOW VELOCITY(FEET/SEC.) =   5.91
  ESTIMATED PIPE DIAMETER(INCH) =  15.00    NUMBER OF PIPES =   1
  PIPE-FLOW(CFS) =       6.27
  PIPE TRAVEL TIME(MIN.) =   0.37    Tc(MIN.) =    6.60
  LONGEST FLOWPATH FROM NODE    418.00 TO NODE    426.00 =     700.00 FEET.

****************************************************************************
  FLOW PROCESS FROM NODE    426.00 TO NODE    426.00 IS CODE =   1
----------------------------------------------------------------------------
  >>>>>DESIGNATE INDEPENDENT STREAM FOR CONFLUENCE<<<<<
============================================================================
  TOTAL NUMBER OF STREAMS =  2
  CONFLUENCE VALUES USED FOR INDEPENDENT STREAM  1 ARE:
  TIME OF CONCENTRATION(MIN.) =    6.60
  RAINFALL INTENSITY(INCH/HR) =   7.05
  TOTAL STREAM AREA(ACRES) =     2.44
  PEAK FLOW RATE(CFS) AT CONFLUENCE =      6.27

****************************************************************************
  FLOW PROCESS FROM NODE    423.00 TO NODE    424.00 IS CODE =  21
----------------------------------------------------------------------------
  >>>>>RATIONAL METHOD INITIAL SUBAREA ANALYSIS<<<<<
============================================================================
  *USER SPECIFIED(SUBAREA):
  USER-SPECIFIED RUNOFF COEFFICIENT = .3500
  S.C.S. CURVE NUMBER (AMC II) =   0
  INITIAL SUBAREA FLOW-LENGTH(FEET) =   100.00
  UPSTREAM ELEVATION(FEET) =    762.00
  DOWNSTREAM ELEVATION(FEET) =    760.00
  ELEVATION DIFFERENCE(FEET) =      2.00
  SUBAREA OVERLAND TIME OF FLOW(MIN.) =    9.584
  WARNING: INITIAL SUBAREA FLOW PATH LENGTH IS GREATER THAN
           THE MAXIMUM OVERLAND FLOW LENGTH =    80.00
           (Reference: Table 3-1B of Hydrology Manual)
           THE MAXIMUM OVERLAND FLOW LENGTH IS USED IN Tc CALCULATION!
   100 YEAR RAINFALL INTENSITY(INCH/HOUR) =  5.541
  SUBAREA RUNOFF(CFS) =      0.27
  TOTAL AREA(ACRES) =      0.14   TOTAL RUNOFF(CFS) =      0.27

****************************************************************************
  FLOW PROCESS FROM NODE    424.00 TO NODE    425.00 IS CODE =  51
----------------------------------------------------------------------------
  >>>>>COMPUTE TRAPEZOIDAL CHANNEL FLOW<<<<<
  >>>>>TRAVELTIME THRU SUBAREA (EXISTING ELEMENT)<<<<<
============================================================================
  ELEVATION DATA: UPSTREAM(FEET) =    760.00  DOWNSTREAM(FEET) =    753.00
  CHANNEL LENGTH THRU SUBAREA(FEET) =   230.00   CHANNEL SLOPE =  0.0304
  CHANNEL BASE(FEET) =    3.00   "Z" FACTOR =   2.000
```

```
  MANNING'S FACTOR = 0.030   MAXIMUM DEPTH(FEET) =  10.00
   100 YEAR RAINFALL INTENSITY(INCH/HOUR) =  4.920
  *USER SPECIFIED(SUBAREA):
  USER-SPECIFIED RUNOFF COEFFICIENT = .3500
  S.C.S. CURVE NUMBER (AMC II) =   0
  TRAVEL TIME COMPUTED USING ESTIMATED FLOW(CFS) =       0.71
  TRAVEL TIME THRU SUBAREA BASED ON VELOCITY(FEET/SEC.) =   1.98
  AVERAGE FLOW DEPTH(FEET) =   0.11   TRAVEL TIME(MIN.) =   1.94
  Tc(MIN.) =   11.52
  SUBAREA AREA(ACRES) =     0.51       SUBAREA RUNOFF(CFS) =    0.88
  AREA-AVERAGE RUNOFF COEFFICIENT =  0.350
  TOTAL AREA(ACRES) =        0.6         PEAK FLOW RATE(CFS) =       1.12

  END OF SUBAREA CHANNEL FLOW HYDRAULICS:
  DEPTH(FEET) =  0.15   FLOW VELOCITY(FEET/SEC.) =   2.27
  LONGEST FLOWPATH FROM NODE    423.00 TO NODE    425.00 =     330.00 FEET.

****************************************************************************
  FLOW PROCESS FROM NODE    425.00 TO NODE    426.00 IS CODE =  31
----------------------------------------------------------------------------
  >>>>>COMPUTE PIPE-FLOW TRAVEL TIME THRU SUBAREA<<<<<
  >>>>>USING COMPUTER-ESTIMATED PIPESIZE (NON-PRESSURE FLOW)<<<<<
============================================================================
  ELEVATION DATA: UPSTREAM(FEET) =   748.40  DOWNSTREAM(FEET) =   747.60
  FLOW LENGTH(FEET) =    75.00   MANNING'S N =  0.013
  ESTIMATED PIPE DIAMETER(INCH) INCREASED TO 12.000
  DEPTH OF FLOW IN  12.0 INCH PIPE IS   4.7 INCHES
  PIPE-FLOW VELOCITY(FEET/SEC.) =   3.95
  ESTIMATED PIPE DIAMETER(INCH) =  12.00    NUMBER OF PIPES =   1
  PIPE-FLOW(CFS) =       1.12
  PIPE TRAVEL TIME(MIN.) =   0.32    Tc(MIN.) =   11.84
  LONGEST FLOWPATH FROM NODE    423.00 TO NODE    426.00 =     405.00 FEET.

****************************************************************************
  FLOW PROCESS FROM NODE    426.00 TO NODE    426.00 IS CODE =   1
----------------------------------------------------------------------------
  >>>>>DESIGNATE INDEPENDENT STREAM FOR CONFLUENCE<<<<<
  >>>>>AND COMPUTE VARIOUS CONFLUENCED STREAM VALUES<<<<<
============================================================================
  TOTAL NUMBER OF STREAMS =  2
  CONFLUENCE VALUES USED FOR INDEPENDENT STREAM  2 ARE:
  TIME OF CONCENTRATION(MIN.) =   11.84
  RAINFALL INTENSITY(INCH/HR) =   4.84
  TOTAL STREAM AREA(ACRES) =     0.65
  PEAK FLOW RATE(CFS) AT CONFLUENCE =      1.12

  ** CONFLUENCE DATA **
  STREAM     RUNOFF       Tc      INTENSITY      AREA
  NUMBER      (CFS)     (MIN.)   (INCH/HOUR)    (ACRE)
      1        6.27     6.60        7.049          2.44
      2        1.12    11.84        4.835          0.65

  RAINFALL INTENSITY AND TIME OF CONCENTRATION RATIO
  CONFLUENCE FORMULA USED FOR  2 STREAMS.

  ** PEAK FLOW RATE TABLE **
  STREAM     RUNOFF      Tc      INTENSITY
  NUMBER      (CFS)    (MIN.)   (INCH/HOUR)
      1        6.89     6.60       7.049
      2        5.42    11.84       4.835

  COMPUTED CONFLUENCE ESTIMATES ARE AS FOLLOWS:
  PEAK FLOW RATE(CFS) =       6.89   Tc(MIN.) =    6.60
```

```
  TOTAL AREA(ACRES) =        3.1
  LONGEST FLOWPATH FROM NODE    418.00 TO NODE    426.00 =     700.00 FEET.

****************************************************************************
  FLOW PROCESS FROM NODE    426.00 TO NODE    427.00 IS CODE =  31
----------------------------------------------------------------------------
  >>>>>COMPUTE PIPE-FLOW TRAVEL TIME THRU SUBAREA<<<<<
  >>>>>USING COMPUTER-ESTIMATED PIPESIZE (NON-PRESSURE FLOW)<<<<<
============================================================================
  ELEVATION DATA: UPSTREAM(FEET) =   747.60  DOWNSTREAM(FEET) =   746.70
  FLOW LENGTH(FEET) =    90.00   MANNING'S N =  0.013
  DEPTH OF FLOW IN  18.0 INCH PIPE IS  11.0 INCHES
  PIPE-FLOW VELOCITY(FEET/SEC.) =   6.09
  ESTIMATED PIPE DIAMETER(INCH) =  18.00    NUMBER OF PIPES =   1
  PIPE-FLOW(CFS) =       6.89
  PIPE TRAVEL TIME(MIN.) =   0.25    Tc(MIN.) =    6.85
  LONGEST FLOWPATH FROM NODE    418.00 TO NODE    427.00 =     790.00 FEET.

****************************************************************************
  FLOW PROCESS FROM NODE    427.00 TO NODE    427.00 IS CODE =  10
----------------------------------------------------------------------------
  >>>>>MAIN-STREAM MEMORY COPIED ONTO MEMORY BANK # 2 <<<<<
============================================================================

****************************************************************************
  FLOW PROCESS FROM NODE    428.00 TO NODE    429.00 IS CODE =  21
----------------------------------------------------------------------------
  >>>>>RATIONAL METHOD INITIAL SUBAREA ANALYSIS<<<<<
============================================================================
  *USER SPECIFIED(SUBAREA):
  USER-SPECIFIED RUNOFF COEFFICIENT = .7100
  S.C.S. CURVE NUMBER (AMC II) =   0
  INITIAL SUBAREA FLOW-LENGTH(FEET) =   100.00
  UPSTREAM ELEVATION(FEET) =    764.70
  DOWNSTREAM ELEVATION(FEET) =    762.70
  ELEVATION DIFFERENCE(FEET) =      2.00
  SUBAREA OVERLAND TIME OF FLOW(MIN.) =    4.984
  WARNING: INITIAL SUBAREA FLOW PATH LENGTH IS GREATER THAN
           THE MAXIMUM OVERLAND FLOW LENGTH =    80.00
           (Reference: Table 3-1B of Hydrology Manual)
           THE MAXIMUM OVERLAND FLOW LENGTH IS USED IN Tc CALCULATION!
   100 YEAR RAINFALL INTENSITY(INCH/HOUR) =  8.431
  NOTE: RAINFALL INTENSITY IS BASED ON Tc = 5-MINUTE.
  SUBAREA RUNOFF(CFS) =      0.78
  TOTAL AREA(ACRES) =      0.13   TOTAL RUNOFF(CFS) =      0.78

****************************************************************************
  FLOW PROCESS FROM NODE    429.00 TO NODE    430.00 IS CODE =  62
----------------------------------------------------------------------------
  >>>>>COMPUTE STREET FLOW TRAVEL TIME THRU SUBAREA<<<<<
  >>>>>(STREET TABLE SECTION #  1 USED)<<<<<
============================================================================
  UPSTREAM ELEVATION(FEET) =  762.00  DOWNSTREAM ELEVATION(FEET) =  750.00
  STREET LENGTH(FEET) =   550.00   CURB HEIGHT(INCHES) =  4.0
  STREET HALFWIDTH(FEET) = 16.00

  DISTANCE FROM CROWN TO CROSSFALL GRADEBREAK(FEET) =   8.00
  INSIDE STREET CROSSFALL(DECIMAL) =  0.020
  OUTSIDE STREET CROSSFALL(DECIMAL)  =  0.020

  SPECIFIED NUMBER OF HALFSTREETS CARRYING RUNOFF =  2
  STREET PARKWAY CROSSFALL(DECIMAL)  =  0.020
  Manning's FRICTION FACTOR for Streetflow Section(curb-to-curb) =   0.0150
```

```
  Manning's FRICTION FACTOR for Back-of-Walk Flow Section =   0.0150

    **TRAVEL TIME COMPUTED USING ESTIMATED FLOW(CFS) =       7.16
    STREETFLOW MODEL RESULTS USING ESTIMATED FLOW:
    STREET FLOW DEPTH(FEET) =  0.23
    HALFSTREET FLOOD WIDTH(FEET) =   10.53
    AVERAGE FLOW VELOCITY(FEET/SEC.) =    3.22
    PRODUCT OF DEPTH&VELOCITY(FT*FT/SEC.) =    0.74
  STREET FLOW TRAVEL TIME(MIN.) =   2.84   Tc(MIN.) =    7.83
   100 YEAR RAINFALL INTENSITY(INCH/HOUR) =  6.315
  *USER SPECIFIED(SUBAREA):
  USER-SPECIFIED RUNOFF COEFFICIENT = .7100
  S.C.S. CURVE NUMBER (AMC II) =   0
  AREA-AVERAGE RUNOFF COEFFICIENT =  0.710
  SUBAREA AREA(ACRES) =    2.81      SUBAREA RUNOFF(CFS) =   12.60
  TOTAL AREA(ACRES) =        2.9        PEAK FLOW RATE(CFS) =      13.18

  END OF SUBAREA STREET FLOW HYDRAULICS:
  DEPTH(FEET) = 0.28   HALFSTREET FLOOD WIDTH(FEET) =  13.28
  FLOW VELOCITY(FEET/SEC.) =  3.73   DEPTH*VELOCITY(FT*FT/SEC.) =   1.06
  LONGEST FLOWPATH FROM NODE    428.00 TO NODE    430.00 =     650.00 FEET.

****************************************************************************
  FLOW PROCESS FROM NODE    430.00 TO NODE    431.00 IS CODE =  31
----------------------------------------------------------------------------
  >>>>>COMPUTE PIPE-FLOW TRAVEL TIME THRU SUBAREA<<<<<
  >>>>>USING COMPUTER-ESTIMATED PIPESIZE (NON-PRESSURE FLOW)<<<<<
============================================================================
  ELEVATION DATA: UPSTREAM(FEET) =   747.20  DOWNSTREAM(FEET) =   747.00
  FLOW LENGTH(FEET) =    15.00   MANNING'S N =  0.013
  DEPTH OF FLOW IN  21.0 INCH PIPE IS  13.7 INCHES
  PIPE-FLOW VELOCITY(FEET/SEC.) =   7.94
  ESTIMATED PIPE DIAMETER(INCH) =  21.00    NUMBER OF PIPES =   1
  PIPE-FLOW(CFS) =      13.18
  PIPE TRAVEL TIME(MIN.) =   0.03    Tc(MIN.) =    7.86
  LONGEST FLOWPATH FROM NODE    428.00 TO NODE    431.00 =     665.00 FEET.

****************************************************************************
  FLOW PROCESS FROM NODE    431.00 TO NODE    427.00 IS CODE =  31
----------------------------------------------------------------------------
  >>>>>COMPUTE PIPE-FLOW TRAVEL TIME THRU SUBAREA<<<<<
  >>>>>USING COMPUTER-ESTIMATED PIPESIZE (NON-PRESSURE FLOW)<<<<<
============================================================================
  ELEVATION DATA: UPSTREAM(FEET) =   747.00  DOWNSTREAM(FEET) =   746.70
  FLOW LENGTH(FEET) =    30.00   MANNING'S N =  0.013
  DEPTH OF FLOW IN  21.0 INCH PIPE IS  15.2 INCHES
  PIPE-FLOW VELOCITY(FEET/SEC.) =   7.05
  ESTIMATED PIPE DIAMETER(INCH) =  21.00    NUMBER OF PIPES =   1
  PIPE-FLOW(CFS) =      13.18
  PIPE TRAVEL TIME(MIN.) =   0.07    Tc(MIN.) =    7.93
  LONGEST FLOWPATH FROM NODE    428.00 TO NODE    427.00 =     695.00 FEET.

****************************************************************************
  FLOW PROCESS FROM NODE    427.00 TO NODE    427.00 IS CODE =  11
----------------------------------------------------------------------------
  >>>>>CONFLUENCE MEMORY BANK # 2 WITH THE MAIN-STREAM MEMORY<<<<<
============================================================================

  ** MAIN STREAM CONFLUENCE DATA **
  STREAM     RUNOFF      Tc      INTENSITY     AREA
  NUMBER      (CFS)    (MIN.)   (INCH/HOUR)   (ACRE)
      1       13.18     7.93       6.262        2.94
  LONGEST FLOWPATH FROM NODE    428.00 TO NODE    427.00 =     695.00 FEET.
```

```
  ** MEMORY BANK #  2 CONFLUENCE DATA **
  STREAM     RUNOFF      Tc      INTENSITY     AREA
  NUMBER      (CFS)    (MIN.)   (INCH/HOUR)   (ACRE)
      1        6.89     6.85       6.884        3.09
  LONGEST FLOWPATH FROM NODE    418.00 TO NODE    427.00 =     790.00 FEET.

  ** PEAK FLOW RATE TABLE **
  STREAM    RUNOFF       Tc      INTENSITY
  NUMBER     (CFS)     (MIN.)   (INCH/HOUR)
      1      18.27       6.85        6.884
      2      19.45       7.93        6.262

  COMPUTED CONFLUENCE ESTIMATES ARE AS FOLLOWS:
  PEAK FLOW RATE(CFS) =      19.45   Tc(MIN.) =    7.93
  TOTAL AREA(ACRES) =        6.0

****************************************************************************
  FLOW PROCESS FROM NODE    427.00 TO NODE    427.00 IS CODE =  12
----------------------------------------------------------------------------
  >>>>>CLEAR MEMORY BANK # 2 <<<<<
============================================================================

****************************************************************************
  FLOW PROCESS FROM NODE    427.00 TO NODE    429.20 IS CODE =  31
----------------------------------------------------------------------------
  >>>>>COMPUTE PIPE-FLOW TRAVEL TIME THRU SUBAREA<<<<<
  >>>>>USING COMPUTER-ESTIMATED PIPESIZE (NON-PRESSURE FLOW)<<<<<
============================================================================
  ELEVATION DATA: UPSTREAM(FEET) =   746.70  DOWNSTREAM(FEET) =   746.30
  FLOW LENGTH(FEET) =    35.00   MANNING'S N =  0.013
  DEPTH OF FLOW IN  24.0 INCH PIPE IS  17.0 INCHES
  PIPE-FLOW VELOCITY(FEET/SEC.) =   8.19
  ESTIMATED PIPE DIAMETER(INCH) =  24.00    NUMBER OF PIPES =   1
  PIPE-FLOW(CFS) =      19.45
  PIPE TRAVEL TIME(MIN.) =   0.07    Tc(MIN.) =    8.00
  LONGEST FLOWPATH FROM NODE    418.00 TO NODE    429.20 =     825.00 FEET.

****************************************************************************
  FLOW PROCESS FROM NODE    429.20 TO NODE    429.40 IS CODE =  31
----------------------------------------------------------------------------
  >>>>>COMPUTE PIPE-FLOW TRAVEL TIME THRU SUBAREA<<<<<
  >>>>>USING COMPUTER-ESTIMATED PIPESIZE (NON-PRESSURE FLOW)<<<<<
============================================================================
  ELEVATION DATA: UPSTREAM(FEET) =   746.30  DOWNSTREAM(FEET) =   722.00
  FLOW LENGTH(FEET) =   350.00   MANNING'S N =  0.013
  DEPTH OF FLOW IN  18.0 INCH PIPE IS  11.5 INCHES
  PIPE-FLOW VELOCITY(FEET/SEC.) =  16.27
  ESTIMATED PIPE DIAMETER(INCH) =  18.00    NUMBER OF PIPES =   1
  PIPE-FLOW(CFS) =      19.45
  PIPE TRAVEL TIME(MIN.) =   0.36    Tc(MIN.) =    8.36
  LONGEST FLOWPATH FROM NODE    418.00 TO NODE    429.40 =    1175.00 FEET.

****************************************************************************
  FLOW PROCESS FROM NODE    429.40 TO NODE    429.40 IS CODE =  11
----------------------------------------------------------------------------
  >>>>>CONFLUENCE MEMORY BANK # 1 WITH THE MAIN-STREAM MEMORY<<<<<
============================================================================

  ** MAIN STREAM CONFLUENCE DATA **
  STREAM     RUNOFF      Tc      INTENSITY     AREA
  NUMBER      (CFS)    (MIN.)   (INCH/HOUR)   (ACRE)
      1       19.45     8.36       6.053        6.03
```

```
  LONGEST FLOWPATH FROM NODE    418.00 TO NODE    429.40 =    1175.00 FEET.

  ** MEMORY BANK #  1 CONFLUENCE DATA **
  STREAM     RUNOFF      Tc      INTENSITY     AREA
  NUMBER      (CFS)    (MIN.)   (INCH/HOUR)   (ACRE)
      1       53.38     7.90       6.279       16.44
  LONGEST FLOWPATH FROM NODE    404.00 TO NODE    429.40 =    1385.00 FEET.

  ** PEAK FLOW RATE TABLE **
  STREAM    RUNOFF       Tc      INTENSITY
  NUMBER     (CFS)     (MIN.)   (INCH/HOUR)
      1      71.75       7.90        6.279
      2      70.90       8.36        6.053

  COMPUTED CONFLUENCE ESTIMATES ARE AS FOLLOWS:
  PEAK FLOW RATE(CFS) =      71.75   Tc(MIN.) =    7.90
  TOTAL AREA(ACRES) =       22.5

****************************************************************************
  FLOW PROCESS FROM NODE    429.40 TO NODE    429.40 IS CODE =  12
----------------------------------------------------------------------------
  >>>>>CLEAR MEMORY BANK # 1 <<<<<
============================================================================

****************************************************************************
  FLOW PROCESS FROM NODE    429.40 TO NODE    430.00 IS CODE =  51
----------------------------------------------------------------------------
  >>>>>COMPUTE TRAPEZOIDAL CHANNEL FLOW<<<<<
  >>>>>TRAVELTIME THRU SUBAREA (EXISTING ELEMENT)<<<<<
============================================================================
  ELEVATION DATA: UPSTREAM(FEET) =    722.00  DOWNSTREAM(FEET) =    707.00
  CHANNEL LENGTH THRU SUBAREA(FEET) =   200.00   CHANNEL SLOPE =  0.0750
  CHANNEL BASE(FEET) =    3.00   "Z" FACTOR =   2.000
  MANNING'S FACTOR = 0.030   MAXIMUM DEPTH(FEET) =  10.00
   100 YEAR RAINFALL INTENSITY(INCH/HOUR) =  6.133
  *USER SPECIFIED(SUBAREA):
  USER-SPECIFIED RUNOFF COEFFICIENT = .3500
  S.C.S. CURVE NUMBER (AMC II) =   0
  TRAVEL TIME COMPUTED USING ESTIMATED FLOW(CFS) =      73.17
  TRAVEL TIME THRU SUBAREA BASED ON VELOCITY(FEET/SEC.) =  11.39
  AVERAGE FLOW DEPTH(FEET) =   1.19   TRAVEL TIME(MIN.) =   0.29
  Tc(MIN.) =    8.19
  SUBAREA AREA(ACRES) =     1.32       SUBAREA RUNOFF(CFS) =    2.83
  AREA-AVERAGE RUNOFF COEFFICIENT =  0.488
  TOTAL AREA(ACRES) =       23.8         PEAK FLOW RATE(CFS) =      71.75

  END OF SUBAREA CHANNEL FLOW HYDRAULICS:
  DEPTH(FEET) =  1.18   FLOW VELOCITY(FEET/SEC.) =  11.35
  LONGEST FLOWPATH FROM NODE    404.00 TO NODE    430.00 =    1585.00 FEET.

****************************************************************************
  FLOW PROCESS FROM NODE    430.00 TO NODE    436.00 IS CODE =  51
----------------------------------------------------------------------------
  >>>>>COMPUTE TRAPEZOIDAL CHANNEL FLOW<<<<<
  >>>>>TRAVELTIME THRU SUBAREA (EXISTING ELEMENT)<<<<<
============================================================================
  ELEVATION DATA: UPSTREAM(FEET) =    707.00  DOWNSTREAM(FEET) =    686.00
  CHANNEL LENGTH THRU SUBAREA(FEET) =   530.00   CHANNEL SLOPE =  0.0396
  CHANNEL BASE(FEET) =    3.00   "Z" FACTOR =   2.000
  MANNING'S FACTOR = 0.030   MAXIMUM DEPTH(FEET) =  10.00
   100 YEAR RAINFALL INTENSITY(INCH/HOUR) =  5.703
  *USER SPECIFIED(SUBAREA):
  USER-SPECIFIED RUNOFF COEFFICIENT = .3500
```

```
  S.C.S. CURVE NUMBER (AMC II) =   0
  TRAVEL TIME COMPUTED USING ESTIMATED FLOW(CFS) =      73.38
  TRAVEL TIME THRU SUBAREA BASED ON VELOCITY(FEET/SEC.) =   9.03
  AVERAGE FLOW DEPTH(FEET) =   1.40   TRAVEL TIME(MIN.) =   0.98
  Tc(MIN.) =    9.17
  SUBAREA AREA(ACRES) =     1.63       SUBAREA RUNOFF(CFS) =    3.25
  AREA-AVERAGE RUNOFF COEFFICIENT =  0.479
  TOTAL AREA(ACRES) =       25.4         PEAK FLOW RATE(CFS) =      71.75

  END OF SUBAREA CHANNEL FLOW HYDRAULICS:
  DEPTH(FEET) =  1.39   FLOW VELOCITY(FEET/SEC.) =   8.97
  LONGEST FLOWPATH FROM NODE    404.00 TO NODE    436.00 =    2115.00 FEET.

****************************************************************************
  FLOW PROCESS FROM NODE    436.00 TO NODE    436.00 IS CODE =  10
----------------------------------------------------------------------------
  >>>>>MAIN-STREAM MEMORY COPIED ONTO MEMORY BANK # 1 <<<<<
============================================================================

****************************************************************************
  FLOW PROCESS FROM NODE    432.50 TO NODE    432.00 IS CODE =  21
----------------------------------------------------------------------------
  >>>>>RATIONAL METHOD INITIAL SUBAREA ANALYSIS<<<<<
============================================================================
  *USER SPECIFIED(SUBAREA):
  USER-SPECIFIED RUNOFF COEFFICIENT = .3500
  S.C.S. CURVE NUMBER (AMC II) =   0
  INITIAL SUBAREA FLOW-LENGTH(FEET) =   115.00
  UPSTREAM ELEVATION(FEET) =    950.00
  DOWNSTREAM ELEVATION(FEET) =    934.00
  ELEVATION DIFFERENCE(FEET) =     16.00
  SUBAREA OVERLAND TIME OF FLOW(MIN.) =    6.267
  WARNING: INITIAL SUBAREA FLOW PATH LENGTH IS GREATER THAN
           THE MAXIMUM OVERLAND FLOW LENGTH =   100.00
           (Reference: Table 3-1B of Hydrology Manual)
           THE MAXIMUM OVERLAND FLOW LENGTH IS USED IN Tc CALCULATION!
   100 YEAR RAINFALL INTENSITY(INCH/HOUR) =  7.288
  SUBAREA RUNOFF(CFS) =      0.46
  TOTAL AREA(ACRES) =      0.18   TOTAL RUNOFF(CFS) =      0.46

****************************************************************************
  FLOW PROCESS FROM NODE    432.00 TO NODE    434.00 IS CODE =  51
----------------------------------------------------------------------------
  >>>>>COMPUTE TRAPEZOIDAL CHANNEL FLOW<<<<<
  >>>>>TRAVELTIME THRU SUBAREA (EXISTING ELEMENT)<<<<<
============================================================================
  ELEVATION DATA: UPSTREAM(FEET) =    934.00  DOWNSTREAM(FEET) =    734.00
  CHANNEL LENGTH THRU SUBAREA(FEET) =   560.00   CHANNEL SLOPE =  0.3571
  CHANNEL BASE(FEET) =    3.00   "Z" FACTOR =   2.000
  MANNING'S FACTOR = 0.030   MAXIMUM DEPTH(FEET) =  10.00
   100 YEAR RAINFALL INTENSITY(INCH/HOUR) =  6.297
  *USER SPECIFIED(SUBAREA):
  USER-SPECIFIED RUNOFF COEFFICIENT = .3500
  S.C.S. CURVE NUMBER (AMC II) =   0
  TRAVEL TIME COMPUTED USING ESTIMATED FLOW(CFS) =       1.80
  TRAVEL TIME THRU SUBAREA BASED ON VELOCITY(FEET/SEC.) =   5.85
  AVERAGE FLOW DEPTH(FEET) =   0.10   TRAVEL TIME(MIN.) =   1.59
  Tc(MIN.) =    7.86
  SUBAREA AREA(ACRES) =     1.21       SUBAREA RUNOFF(CFS) =    2.67
  AREA-AVERAGE RUNOFF COEFFICIENT =  0.350
  TOTAL AREA(ACRES) =        1.4         PEAK FLOW RATE(CFS) =       3.06

  END OF SUBAREA CHANNEL FLOW HYDRAULICS:
```

```
  DEPTH(FEET) =  0.13   FLOW VELOCITY(FEET/SEC.) =   7.08
  LONGEST FLOWPATH FROM NODE    432.50 TO NODE    434.00 =     675.00 FEET.

****************************************************************************
  FLOW PROCESS FROM NODE    434.00 TO NODE    434.00 IS CODE =   1
----------------------------------------------------------------------------
  >>>>>DESIGNATE INDEPENDENT STREAM FOR CONFLUENCE<<<<<
============================================================================
  TOTAL NUMBER OF STREAMS =  2
  CONFLUENCE VALUES USED FOR INDEPENDENT STREAM  1 ARE:
  TIME OF CONCENTRATION(MIN.) =    7.86
  RAINFALL INTENSITY(INCH/HR) =   6.30
  TOTAL STREAM AREA(ACRES) =     1.39
  PEAK FLOW RATE(CFS) AT CONFLUENCE =      3.06

****************************************************************************
  FLOW PROCESS FROM NODE    432.50 TO NODE    433.00 IS CODE =  21
----------------------------------------------------------------------------
  >>>>>RATIONAL METHOD INITIAL SUBAREA ANALYSIS<<<<<
============================================================================
  *USER SPECIFIED(SUBAREA):
  USER-SPECIFIED RUNOFF COEFFICIENT = .3500
  S.C.S. CURVE NUMBER (AMC II) =   0
  INITIAL SUBAREA FLOW-LENGTH(FEET) =    90.00
  UPSTREAM ELEVATION(FEET) =    950.00
  DOWNSTREAM ELEVATION(FEET) =    934.00
  ELEVATION DIFFERENCE(FEET) =     16.00
  SUBAREA OVERLAND TIME OF FLOW(MIN.) =    5.945
  WARNING: THE MAXIMUM OVERLAND FLOW SLOPE, 10.%, IS USED IN Tc CALCULATION!
   100 YEAR RAINFALL INTENSITY(INCH/HOUR) =  7.540
  SUBAREA RUNOFF(CFS) =      0.21
  TOTAL AREA(ACRES) =      0.08   TOTAL RUNOFF(CFS) =      0.21

****************************************************************************
  FLOW PROCESS FROM NODE    433.00 TO NODE    434.00 IS CODE =  51
----------------------------------------------------------------------------
  >>>>>COMPUTE TRAPEZOIDAL CHANNEL FLOW<<<<<
  >>>>>TRAVELTIME THRU SUBAREA (EXISTING ELEMENT)<<<<<
============================================================================
  ELEVATION DATA: UPSTREAM(FEET) =    934.00  DOWNSTREAM(FEET) =    734.00
  CHANNEL LENGTH THRU SUBAREA(FEET) =   550.00   CHANNEL SLOPE =  0.3636
  CHANNEL BASE(FEET) =    3.00   "Z" FACTOR =   2.000
  MANNING'S FACTOR = 0.030   MAXIMUM DEPTH(FEET) =  10.00
   100 YEAR RAINFALL INTENSITY(INCH/HOUR) =  6.529
  *USER SPECIFIED(SUBAREA):
  USER-SPECIFIED RUNOFF COEFFICIENT = .3500
  S.C.S. CURVE NUMBER (AMC II) =   0
  TRAVEL TIME COMPUTED USING ESTIMATED FLOW(CFS) =       2.02
  TRAVEL TIME THRU SUBAREA BASED ON VELOCITY(FEET/SEC.) =   6.17
  AVERAGE FLOW DEPTH(FEET) =   0.10   TRAVEL TIME(MIN.) =   1.49
  Tc(MIN.) =    7.43
  SUBAREA AREA(ACRES) =     1.57       SUBAREA RUNOFF(CFS) =    3.59
  AREA-AVERAGE RUNOFF COEFFICIENT =  0.350
  TOTAL AREA(ACRES) =        1.7         PEAK FLOW RATE(CFS) =       3.77

  END OF SUBAREA CHANNEL FLOW HYDRAULICS:
  DEPTH(FEET) =  0.15   FLOW VELOCITY(FEET/SEC.) =   7.74
  LONGEST FLOWPATH FROM NODE    432.50 TO NODE    434.00 =     640.00 FEET.

****************************************************************************
  FLOW PROCESS FROM NODE    434.00 TO NODE    434.00 IS CODE =   1
----------------------------------------------------------------------------
  >>>>>DESIGNATE INDEPENDENT STREAM FOR CONFLUENCE<<<<<
```

```
  >>>>>AND COMPUTE VARIOUS CONFLUENCED STREAM VALUES<<<<<
==============================================================================
  TOTAL NUMBER OF STREAMS =  2
  CONFLUENCE VALUES USED FOR INDEPENDENT STREAM  2 ARE:
  TIME OF CONCENTRATION(MIN.) =    7.43
  RAINFALL INTENSITY(INCH/HR) =   6.53
  TOTAL STREAM AREA(ACRES) =     1.65
  PEAK FLOW RATE(CFS) AT CONFLUENCE =      3.77

  ** CONFLUENCE DATA **
  STREAM     RUNOFF       Tc      INTENSITY      AREA
  NUMBER      (CFS)     (MIN.)   (INCH/HOUR)    (ACRE)
      1        3.06     7.86        6.297          1.39
      2        3.77     7.43        6.529          1.65

  RAINFALL INTENSITY AND TIME OF CONCENTRATION RATIO
  CONFLUENCE FORMULA USED FOR  2 STREAMS.

  ** PEAK FLOW RATE TABLE **
  STREAM     RUNOFF      Tc      INTENSITY
  NUMBER      (CFS)    (MIN.)   (INCH/HOUR)
      1        6.67     7.43       6.529
      2        6.70     7.86       6.297

  COMPUTED CONFLUENCE ESTIMATES ARE AS FOLLOWS:
  PEAK FLOW RATE(CFS) =       6.70   Tc(MIN.) =    7.86
  TOTAL AREA(ACRES) =        3.0
  LONGEST FLOWPATH FROM NODE    432.50 TO NODE    434.00 =     675.00 FEET.

****************************************************************************
  FLOW PROCESS FROM NODE    434.00 TO NODE    435.00 IS CODE =  51
----------------------------------------------------------------------------
  >>>>>COMPUTE TRAPEZOIDAL CHANNEL FLOW<<<<<
  >>>>>TRAVELTIME THRU SUBAREA (EXISTING ELEMENT)<<<<<
==============================================================================
  ELEVATION DATA: UPSTREAM(FEET) =    734.00  DOWNSTREAM(FEET) =    693.00
  CHANNEL LENGTH THRU SUBAREA(FEET) =   790.00   CHANNEL SLOPE =  0.0519
  CHANNEL BASE(FEET) =    3.00   "Z" FACTOR =   2.000
  MANNING'S FACTOR = 0.030   MAXIMUM DEPTH(FEET) =  10.00
   100 YEAR RAINFALL INTENSITY(INCH/HOUR) =  5.427
  *USER SPECIFIED(SUBAREA):
  USER-SPECIFIED RUNOFF COEFFICIENT = .4100
  S.C.S. CURVE NUMBER (AMC II) =   0
  TRAVEL TIME COMPUTED USING ESTIMATED FLOW(CFS) =      15.48
  TRAVEL TIME THRU SUBAREA BASED ON VELOCITY(FEET/SEC.) =   6.46
  AVERAGE FLOW DEPTH(FEET) =   0.58   TRAVEL TIME(MIN.) =   2.04
  Tc(MIN.) =    9.90
  SUBAREA AREA(ACRES) =     7.90       SUBAREA RUNOFF(CFS) =   17.58
  AREA-AVERAGE RUNOFF COEFFICIENT =  0.393
  TOTAL AREA(ACRES) =       10.9         PEAK FLOW RATE(CFS) =      23.35

  END OF SUBAREA CHANNEL FLOW HYDRAULICS:
  DEPTH(FEET) =  0.72   FLOW VELOCITY(FEET/SEC.) =   7.28
  LONGEST FLOWPATH FROM NODE    432.50 TO NODE    435.00 =    1465.00 FEET.

****************************************************************************
  FLOW PROCESS FROM NODE    435.00 TO NODE    436.00 IS CODE =  51
----------------------------------------------------------------------------
  >>>>>COMPUTE TRAPEZOIDAL CHANNEL FLOW<<<<<
  >>>>>TRAVELTIME THRU SUBAREA (EXISTING ELEMENT)<<<<<
==============================================================================
  ELEVATION DATA: UPSTREAM(FEET) =    693.00  DOWNSTREAM(FEET) =    686.00
  CHANNEL LENGTH THRU SUBAREA(FEET) =   410.00   CHANNEL SLOPE =  0.0171
```

```
  CHANNEL BASE(FEET) =    3.00   "Z" FACTOR =   2.000
  MANNING'S FACTOR = 0.030   MAXIMUM DEPTH(FEET) =  10.00
   100 YEAR RAINFALL INTENSITY(INCH/HOUR) =  4.986
  *USER SPECIFIED(SUBAREA):
  USER-SPECIFIED RUNOFF COEFFICIENT = .4100
  S.C.S. CURVE NUMBER (AMC II) =   0
  TRAVEL TIME COMPUTED USING ESTIMATED FLOW(CFS) =      24.11
  TRAVEL TIME THRU SUBAREA BASED ON VELOCITY(FEET/SEC.) =   4.91
  AVERAGE FLOW DEPTH(FEET) =   0.99   TRAVEL TIME(MIN.) =   1.39
  Tc(MIN.) =   11.29
  SUBAREA AREA(ACRES) =     0.74       SUBAREA RUNOFF(CFS) =    1.51
  AREA-AVERAGE RUNOFF COEFFICIENT =  0.394
  TOTAL AREA(ACRES) =       11.7         PEAK FLOW RATE(CFS) =      23.35

  END OF SUBAREA CHANNEL FLOW HYDRAULICS:
  DEPTH(FEET) =  0.97   FLOW VELOCITY(FEET/SEC.) =   4.86
  LONGEST FLOWPATH FROM NODE    432.50 TO NODE    436.00 =    1875.00 FEET.

****************************************************************************
  FLOW PROCESS FROM NODE    436.00 TO NODE    436.00 IS CODE =  11
----------------------------------------------------------------------------
  >>>>>CONFLUENCE MEMORY BANK # 1 WITH THE MAIN-STREAM MEMORY<<<<<
============================================================================

  ** MAIN STREAM CONFLUENCE DATA **
  STREAM     RUNOFF      Tc      INTENSITY     AREA
  NUMBER      (CFS)    (MIN.)   (INCH/HOUR)   (ACRE)
      1       23.35    11.29       4.986       11.68
  LONGEST FLOWPATH FROM NODE    432.50 TO NODE    436.00 =    1875.00 FEET.

  ** MEMORY BANK #  1 CONFLUENCE DATA **
  STREAM     RUNOFF      Tc      INTENSITY     AREA
  NUMBER      (CFS)    (MIN.)   (INCH/HOUR)   (ACRE)
      1       71.75     9.17       5.703       25.42
  LONGEST FLOWPATH FROM NODE    404.00 TO NODE    436.00 =    2115.00 FEET.

  ** PEAK FLOW RATE TABLE **
  STREAM    RUNOFF       Tc      INTENSITY
  NUMBER     (CFS)     (MIN.)   (INCH/HOUR)
      1      90.71       9.17        5.703
      2      86.08      11.29        4.986

  COMPUTED CONFLUENCE ESTIMATES ARE AS FOLLOWS:
  PEAK FLOW RATE(CFS) =      90.71   Tc(MIN.) =    9.17
  TOTAL AREA(ACRES) =       37.1

****************************************************************************
  FLOW PROCESS FROM NODE    436.00 TO NODE    439.00 IS CODE =  51
----------------------------------------------------------------------------
  >>>>>COMPUTE TRAPEZOIDAL CHANNEL FLOW<<<<<
  >>>>>TRAVELTIME THRU SUBAREA (EXISTING ELEMENT)<<<<<
============================================================================
  ELEVATION DATA: UPSTREAM(FEET) =    686.00  DOWNSTREAM(FEET) =    682.00
  CHANNEL LENGTH THRU SUBAREA(FEET) =   260.00   CHANNEL SLOPE =  0.0154
  CHANNEL BASE(FEET) =    3.00   "Z" FACTOR =   2.000
  MANNING'S FACTOR = 0.030   MAXIMUM DEPTH(FEET) =  10.00
   100 YEAR RAINFALL INTENSITY(INCH/HOUR) =  5.461
  *USER SPECIFIED(SUBAREA):
  USER-SPECIFIED RUNOFF COEFFICIENT = .4100
  S.C.S. CURVE NUMBER (AMC II) =   0
  TRAVEL TIME COMPUTED USING ESTIMATED FLOW(CFS) =      94.55
  TRAVEL TIME THRU SUBAREA BASED ON VELOCITY(FEET/SEC.) =   6.82
  AVERAGE FLOW DEPTH(FEET) =   1.99   TRAVEL TIME(MIN.) =   0.64
```

```
  Tc(MIN.) =    9.80
  SUBAREA AREA(ACRES) =     3.43       SUBAREA RUNOFF(CFS) =    7.68
  AREA-AVERAGE RUNOFF COEFFICIENT =  0.449
  TOTAL AREA(ACRES) =       40.5         PEAK FLOW RATE(CFS) =      99.38

  END OF SUBAREA CHANNEL FLOW HYDRAULICS:
  DEPTH(FEET) =  2.03   FLOW VELOCITY(FEET/SEC.) =   6.91
  LONGEST FLOWPATH FROM NODE    404.00 TO NODE    439.00 =    2375.00 FEET.

****************************************************************************
  FLOW PROCESS FROM NODE    439.00 TO NODE    439.00 IS CODE =   1
----------------------------------------------------------------------------
  >>>>>DESIGNATE INDEPENDENT STREAM FOR CONFLUENCE<<<<<
============================================================================
  TOTAL NUMBER OF STREAMS =  2
  CONFLUENCE VALUES USED FOR INDEPENDENT STREAM  1 ARE:
  TIME OF CONCENTRATION(MIN.) =    9.80
  RAINFALL INTENSITY(INCH/HR) =   5.46
  TOTAL STREAM AREA(ACRES) =    40.53
  PEAK FLOW RATE(CFS) AT CONFLUENCE =     99.38

****************************************************************************
  FLOW PROCESS FROM NODE    437.00 TO NODE    438.00 IS CODE =  21
----------------------------------------------------------------------------
  >>>>>RATIONAL METHOD INITIAL SUBAREA ANALYSIS<<<<<
============================================================================
  *USER SPECIFIED(SUBAREA):
  USER-SPECIFIED RUNOFF COEFFICIENT = .4100
  S.C.S. CURVE NUMBER (AMC II) =   0
  INITIAL SUBAREA FLOW-LENGTH(FEET) =   100.00
  UPSTREAM ELEVATION(FEET) =    740.00
  DOWNSTREAM ELEVATION(FEET) =    724.00
  ELEVATION DIFFERENCE(FEET) =     16.00
  SUBAREA OVERLAND TIME OF FLOW(MIN.) =    5.765
  WARNING: THE MAXIMUM OVERLAND FLOW SLOPE, 10.%, IS USED IN Tc CALCULATION!
   100 YEAR RAINFALL INTENSITY(INCH/HOUR) =  7.691
  SUBAREA RUNOFF(CFS) =      1.64
  TOTAL AREA(ACRES) =      0.52   TOTAL RUNOFF(CFS) =      1.64

****************************************************************************
  FLOW PROCESS FROM NODE    438.00 TO NODE    439.00 IS CODE =  51
----------------------------------------------------------------------------
  >>>>>COMPUTE TRAPEZOIDAL CHANNEL FLOW<<<<<
  >>>>>TRAVELTIME THRU SUBAREA (EXISTING ELEMENT)<<<<<
============================================================================
  ELEVATION DATA: UPSTREAM(FEET) =    724.00  DOWNSTREAM(FEET) =    682.00
  CHANNEL LENGTH THRU SUBAREA(FEET) =   560.00   CHANNEL SLOPE =  0.0750
  CHANNEL BASE(FEET) =    3.00   "Z" FACTOR =   2.000
  MANNING'S FACTOR = 0.030   MAXIMUM DEPTH(FEET) =  10.00
   100 YEAR RAINFALL INTENSITY(INCH/HOUR) =  6.617
  *USER SPECIFIED(SUBAREA):
  USER-SPECIFIED RUNOFF COEFFICIENT = .4100
  S.C.S. CURVE NUMBER (AMC II) =   0
  TRAVEL TIME COMPUTED USING ESTIMATED FLOW(CFS) =       8.98
  TRAVEL TIME THRU SUBAREA BASED ON VELOCITY(FEET/SEC.) =   6.17
  AVERAGE FLOW DEPTH(FEET) =   0.39   TRAVEL TIME(MIN.) =   1.51
  Tc(MIN.) =    7.28
  SUBAREA AREA(ACRES) =     5.39       SUBAREA RUNOFF(CFS) =   14.62
  AREA-AVERAGE RUNOFF COEFFICIENT =  0.410
  TOTAL AREA(ACRES) =        5.9         PEAK FLOW RATE(CFS) =      16.03

  END OF SUBAREA CHANNEL FLOW HYDRAULICS:
  DEPTH(FEET) =  0.53   FLOW VELOCITY(FEET/SEC.) =   7.43
```

```
  LONGEST FLOWPATH FROM NODE    437.00 TO NODE    439.00 =     660.00 FEET.

****************************************************************************
  FLOW PROCESS FROM NODE    439.00 TO NODE    439.00 IS CODE =   1
----------------------------------------------------------------------------
  >>>>>DESIGNATE INDEPENDENT STREAM FOR CONFLUENCE<<<<<
  >>>>>AND COMPUTE VARIOUS CONFLUENCED STREAM VALUES<<<<<
============================================================================
  TOTAL NUMBER OF STREAMS =  2
  CONFLUENCE VALUES USED FOR INDEPENDENT STREAM  2 ARE:
  TIME OF CONCENTRATION(MIN.) =    7.28
  RAINFALL INTENSITY(INCH/HR) =   6.62
  TOTAL STREAM AREA(ACRES) =     5.91
  PEAK FLOW RATE(CFS) AT CONFLUENCE =     16.03

  ** CONFLUENCE DATA **
  STREAM     RUNOFF       Tc      INTENSITY      AREA
  NUMBER      (CFS)     (MIN.)   (INCH/HOUR)    (ACRE)
      1       99.38     9.80        5.461         40.53
      2       16.03     7.28        6.617          5.91

  RAINFALL INTENSITY AND TIME OF CONCENTRATION RATIO
  CONFLUENCE FORMULA USED FOR  2 STREAMS.

  ** PEAK FLOW RATE TABLE **
  STREAM     RUNOFF      Tc      INTENSITY
  NUMBER      (CFS)    (MIN.)   (INCH/HOUR)
      1       89.82     7.28       6.617
      2      112.61     9.80       5.461

  COMPUTED CONFLUENCE ESTIMATES ARE AS FOLLOWS:
  PEAK FLOW RATE(CFS) =     112.61   Tc(MIN.) =    9.80
  TOTAL AREA(ACRES) =       46.4
  LONGEST FLOWPATH FROM NODE    404.00 TO NODE    439.00 =    2375.00 FEET.
============================================================================
  END OF STUDY SUMMARY:
  TOTAL AREA(ACRES)     =       46.4  TC(MIN.) =      9.80
  PEAK FLOW RATE(CFS)   =     112.61
============================================================================
============================================================================
  END OF RATIONAL METHOD ANALYSIS
```

Appendix E

<u>Detention Basin Analysis</u>
Extended Detention Basin Outlet Structure Details
Detention Basin Analysis Output

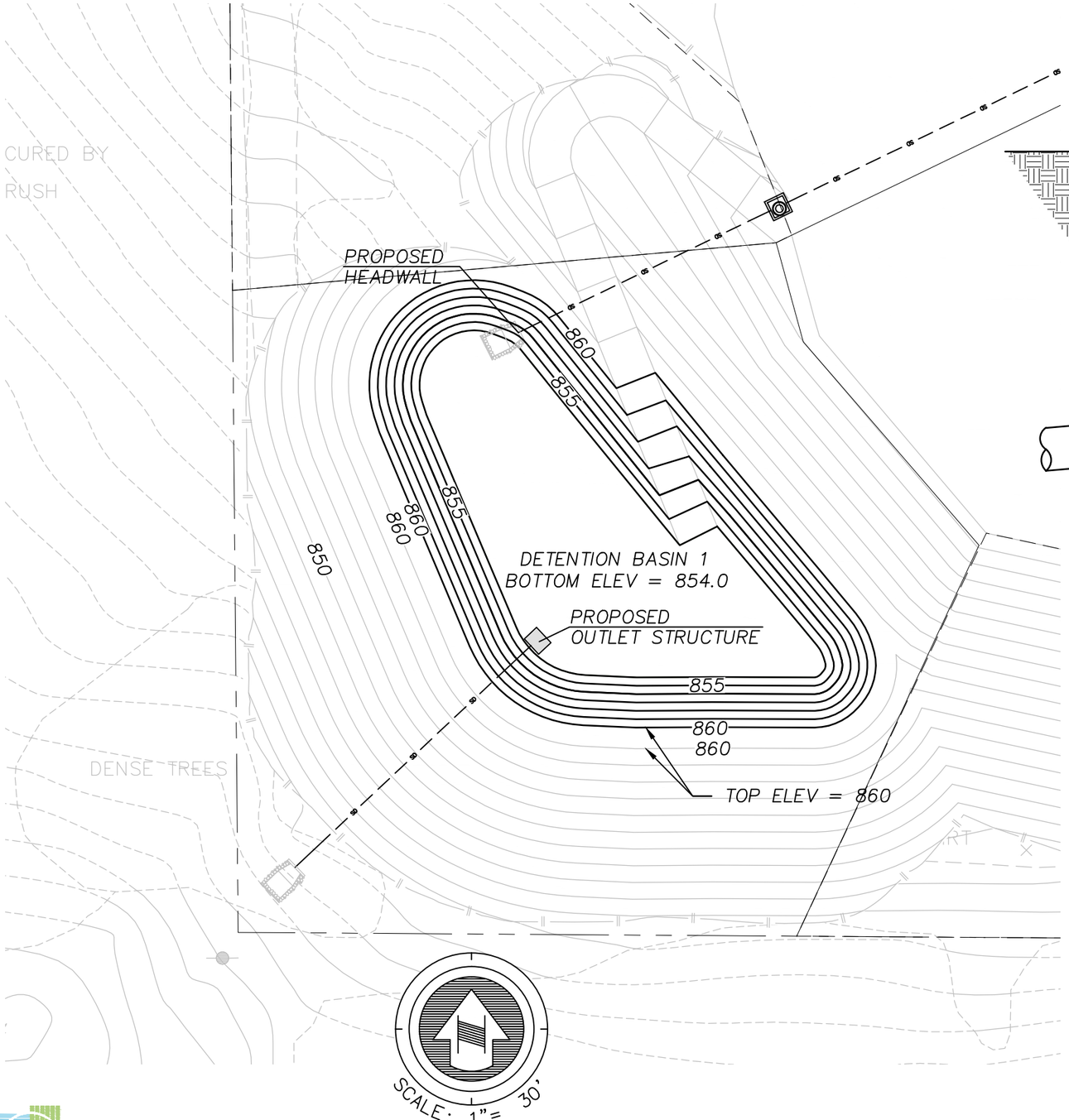

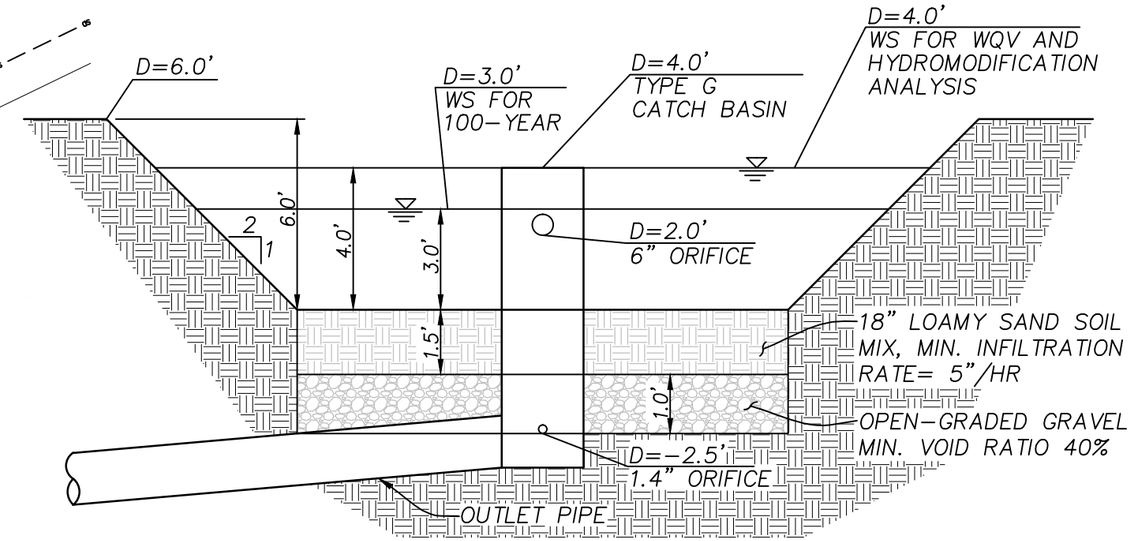

DMA 1

FUSCOE ENGINEERING
full circle thinking

30 15 0 30 60 90
GRAPHIC SCALE IN FEET

VALIANO
PROPOSED DETENTION BASIN
BASIN 1

M:\PROJECTS\02690 INTEGRAL COMMUNITIES\007-02 EDEN HILLS ENGINEERING\DWG\STORMWATER\W-H\DETENTION BASIN DETAILS.DWG (02-04-15 11:12:23AM) PLOTTED BY: roberts

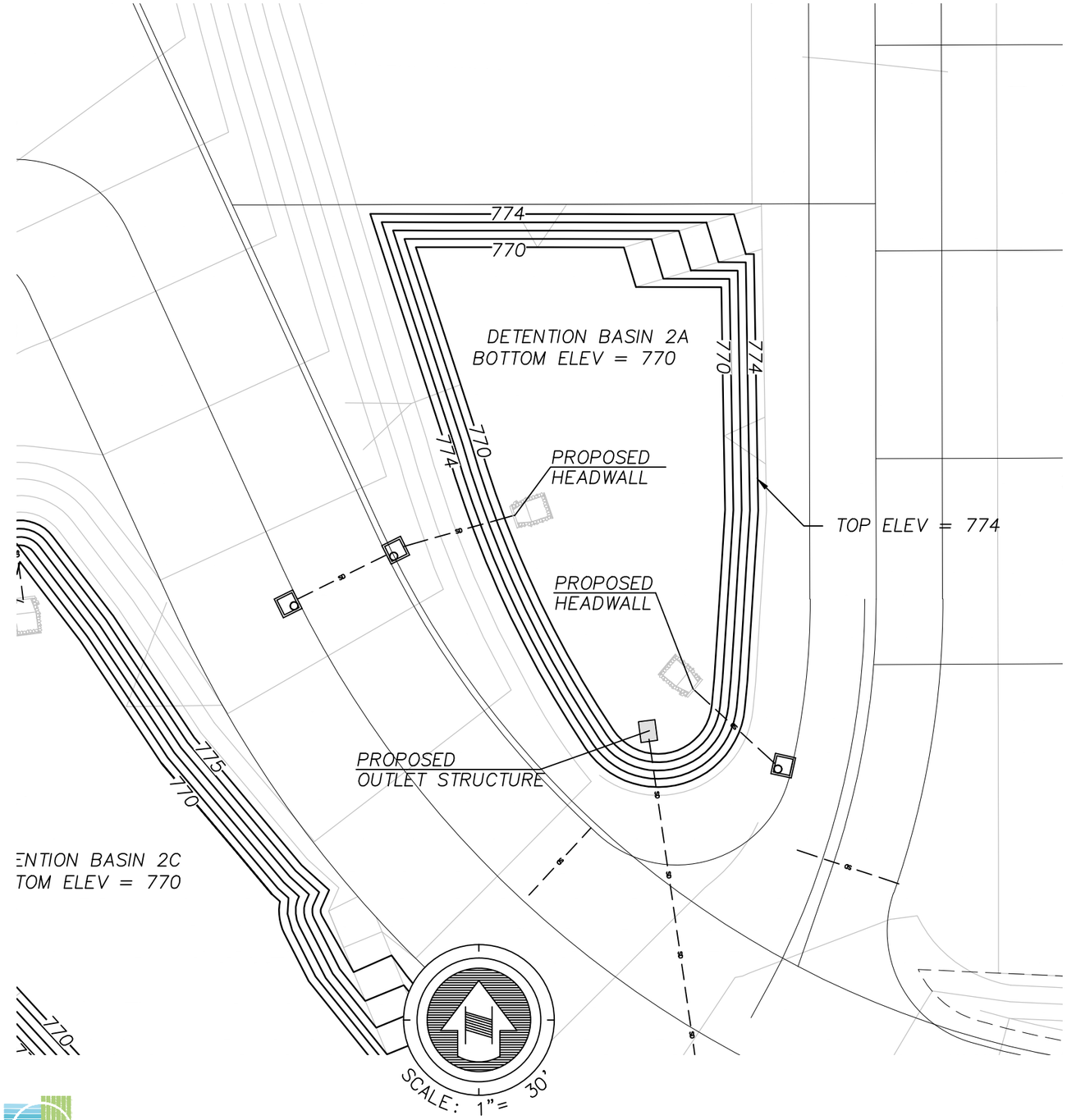

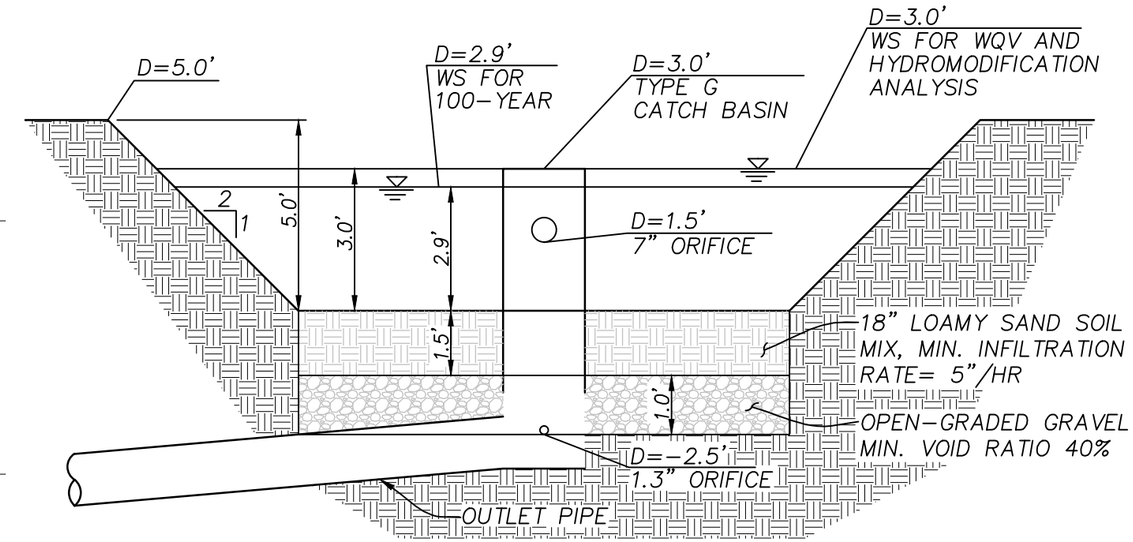

DMA 2A

FUSCOE ENGINEERING
full circle thinking

30 15 0 30 60 90
GRAPHIC SCALE IN FEET

VALIANO
PROPOSED DETENTION BASIN
BASIN 2A

M:\PROJECTS\02000 INTEGRAL COMMUNITIES\007-02 EDEN HILLS ENGINEERING\ENG\STORMWATER\H-1\DETENTION BASIN DETAILS.DWG (02-04-15 11:13:27AM) PLOTTED BY: roberts

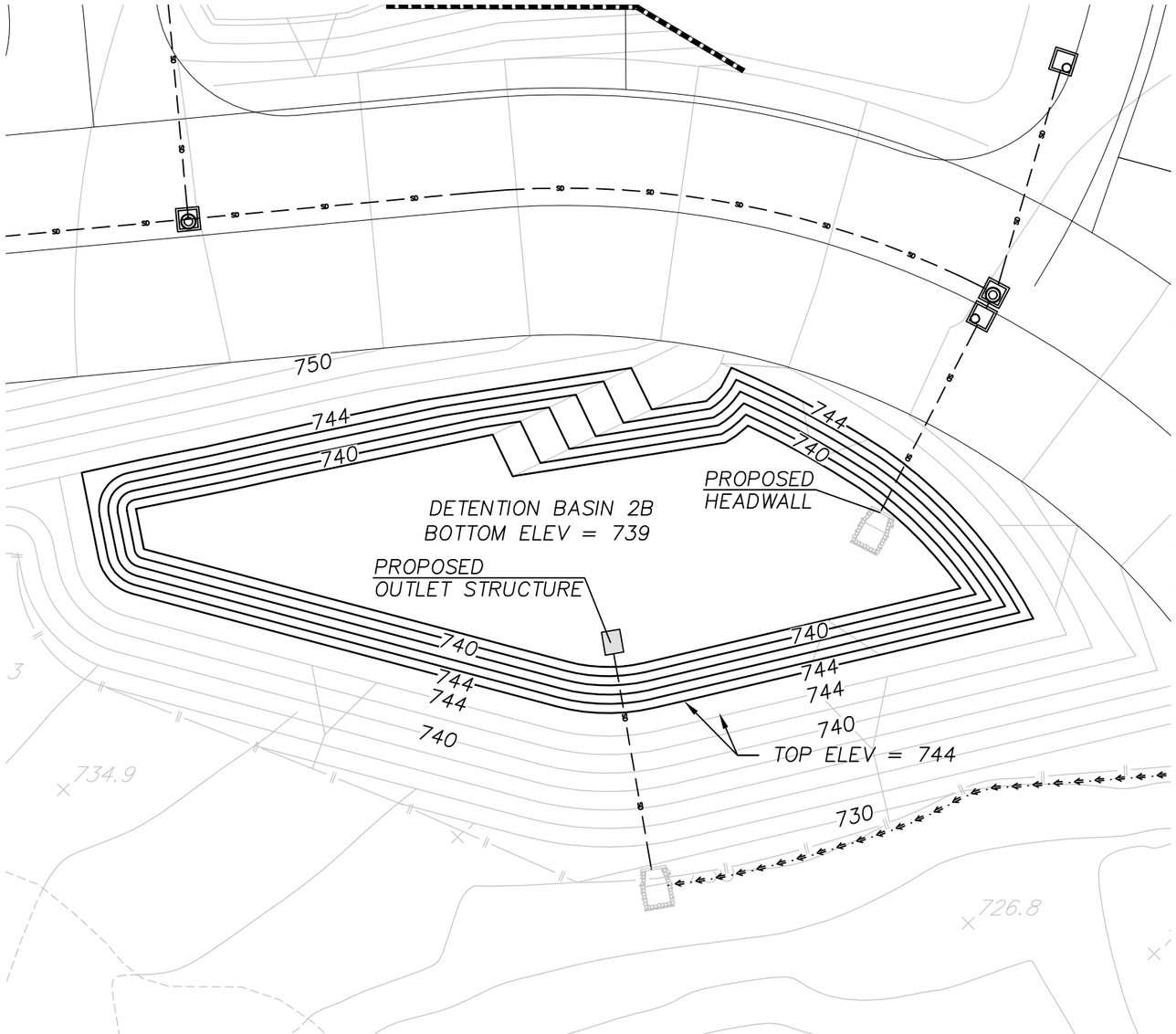

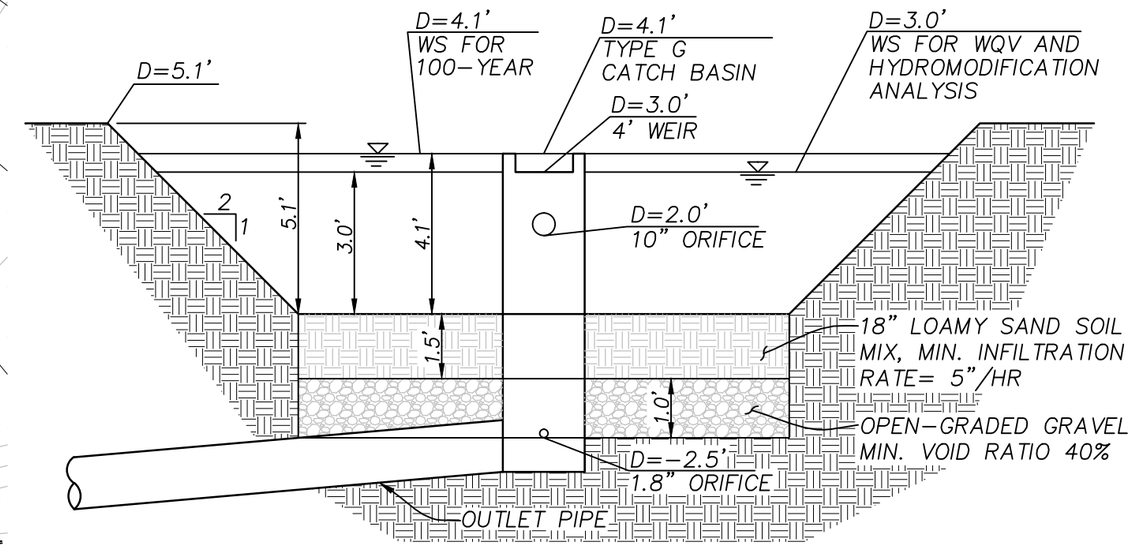

DMA 2B

SCALE: 1"= 30'

30 15 0 30 60 90

GRAPHIC SCALE IN FEET

FUSCOE ENGINEERING
full circle thinking

VALIANO
PROPOSED DETENTION BASIN
BASIN 2B

M:\PROJECTS\02690 INTEGRAL COMMUNITIES\007-02 EDEN HILLS ENGINEERING\ENG\STORMWATER\H-H\DETENTION BASIN DETAILS.DWG (02-24-15 11:16:22AM) PLOTTED BY: roberto

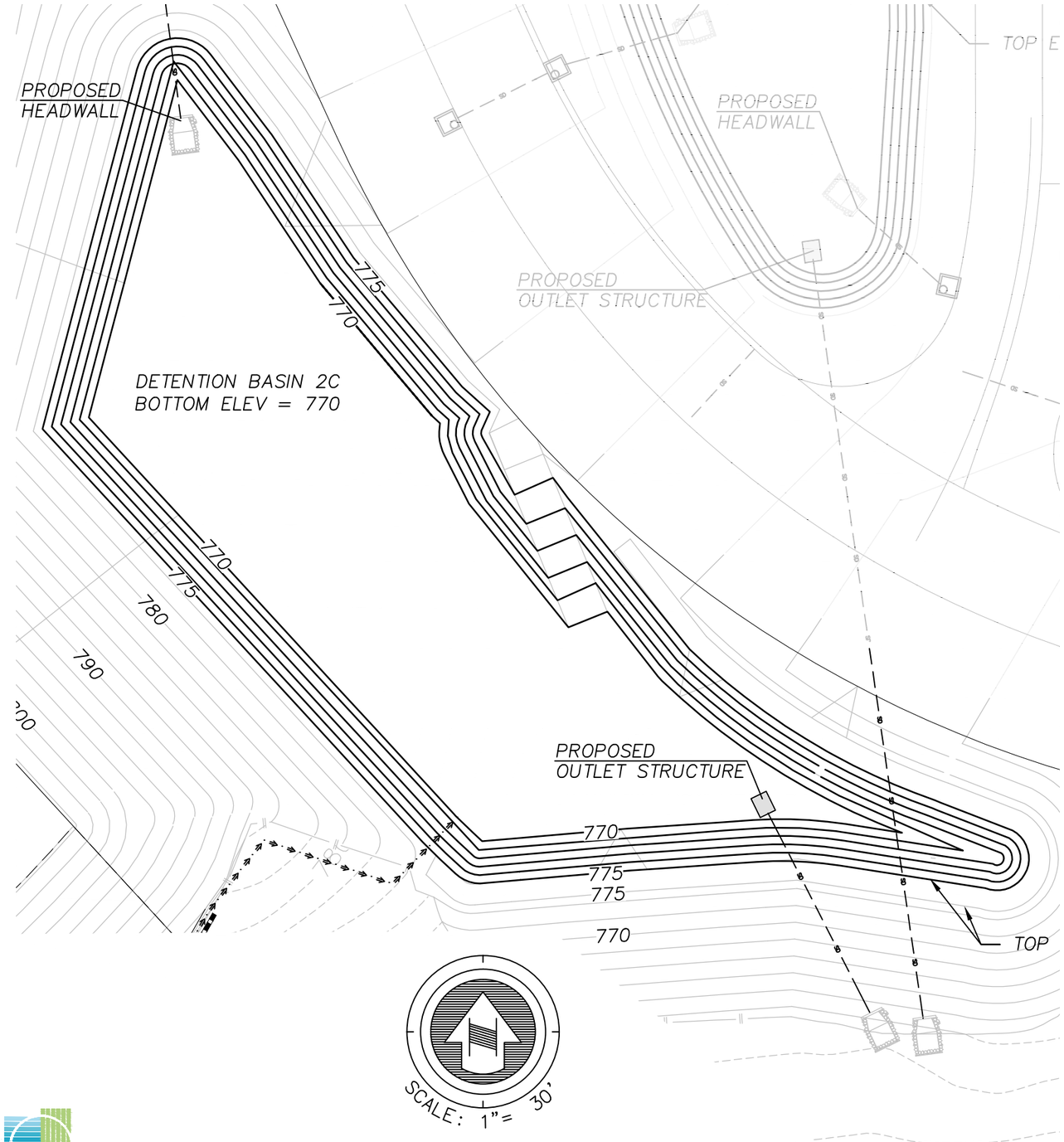

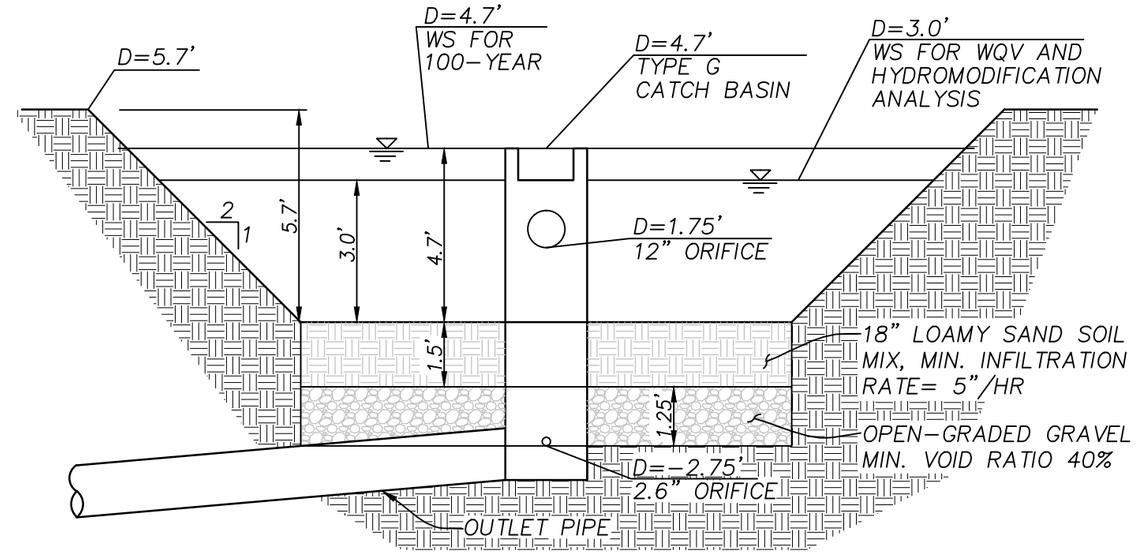

DMA 2C

FUSCOE ENGINEERING
full circle thinking

30 15 0 30 60 90
GRAPHIC SCALE IN FEET

VALIANO
PROPOSED DETENTION BASIN
BASIN 2C

M:\PROJECTS\0890 INTEGRAL COMMUNITIES\07-02 EDEN HILLS ENGINEERING\DWG\STORMWATER\H-H\DETENTION BASIN DETAILS.DWG (02-04-15 11:15:32AM) PLOTTED BY: mroberts

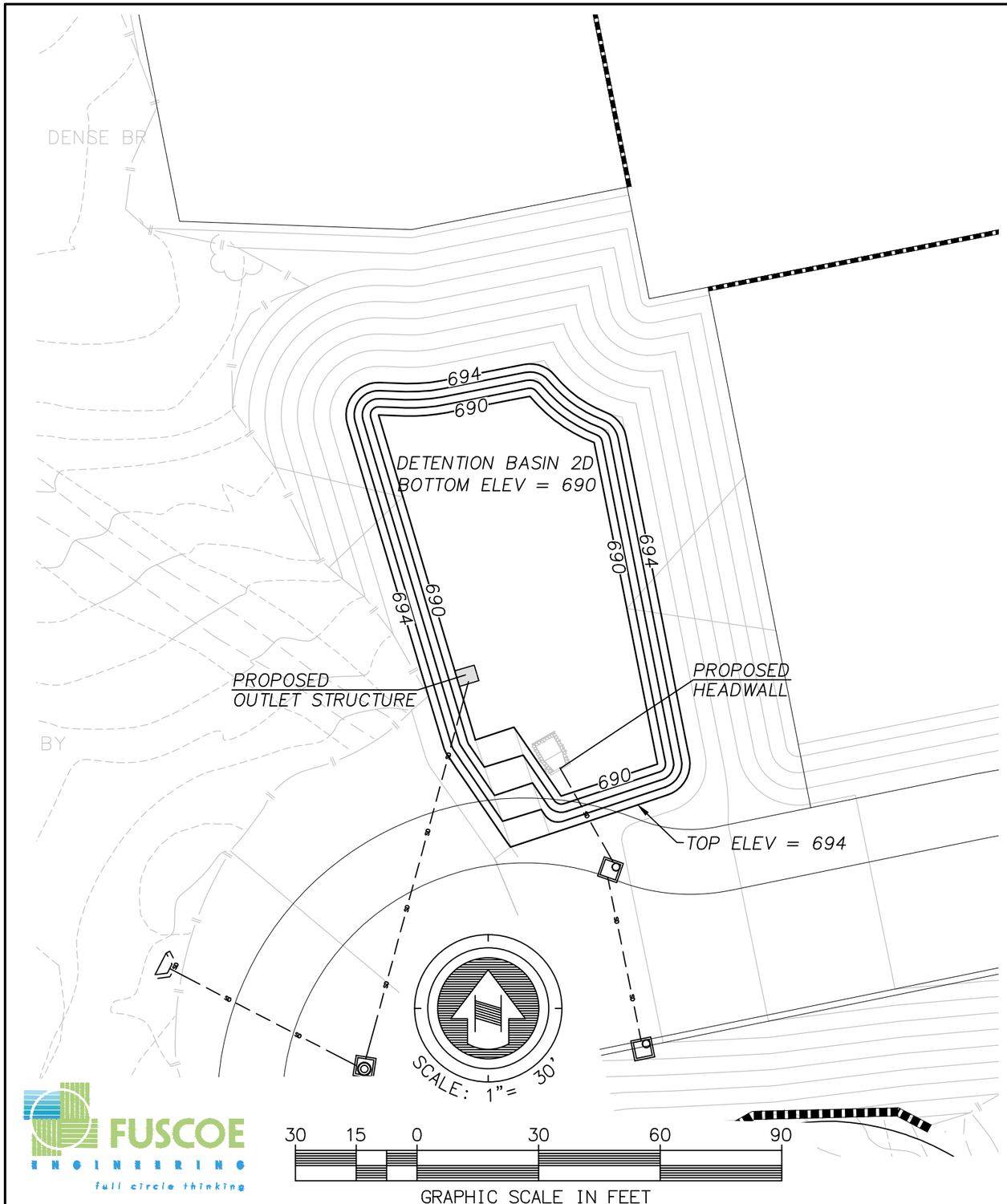

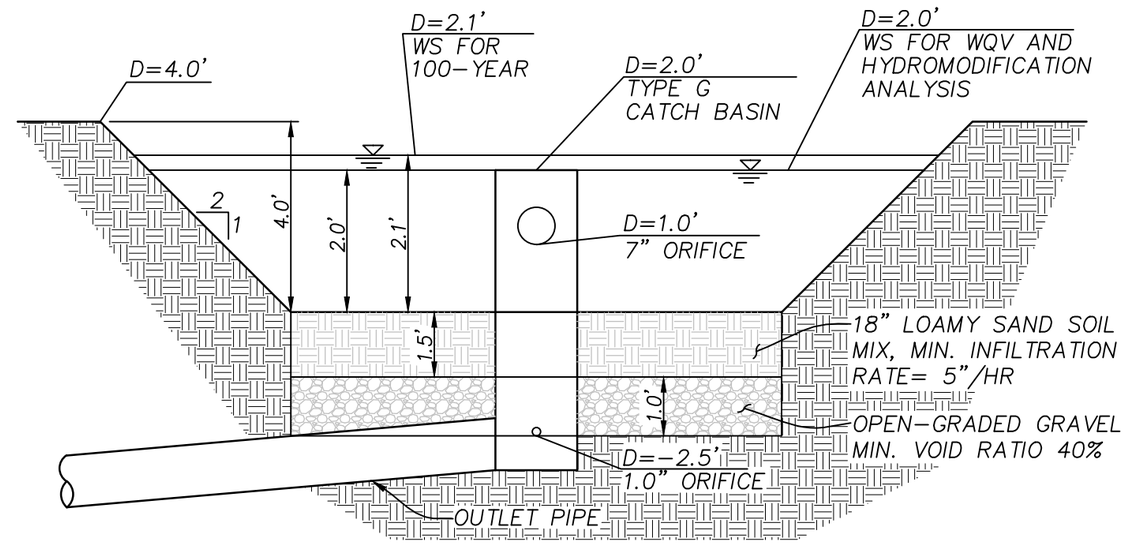

DMA 2D

FUSCOE ENGINEERING
full circle thinking

VALIANO
PROPOSED DETENTION BASIN
BASIN 2D

M:\PROJECTS\22600 INTEGRAL COMMUNITIES\007-02 EDEN HILLS ENGINEERING\ENG\STORMWATER\V4\DETENTION BASIN DETAILS.DWG (02-04-15 11:16:36AM) PLOTTED BY: roberts

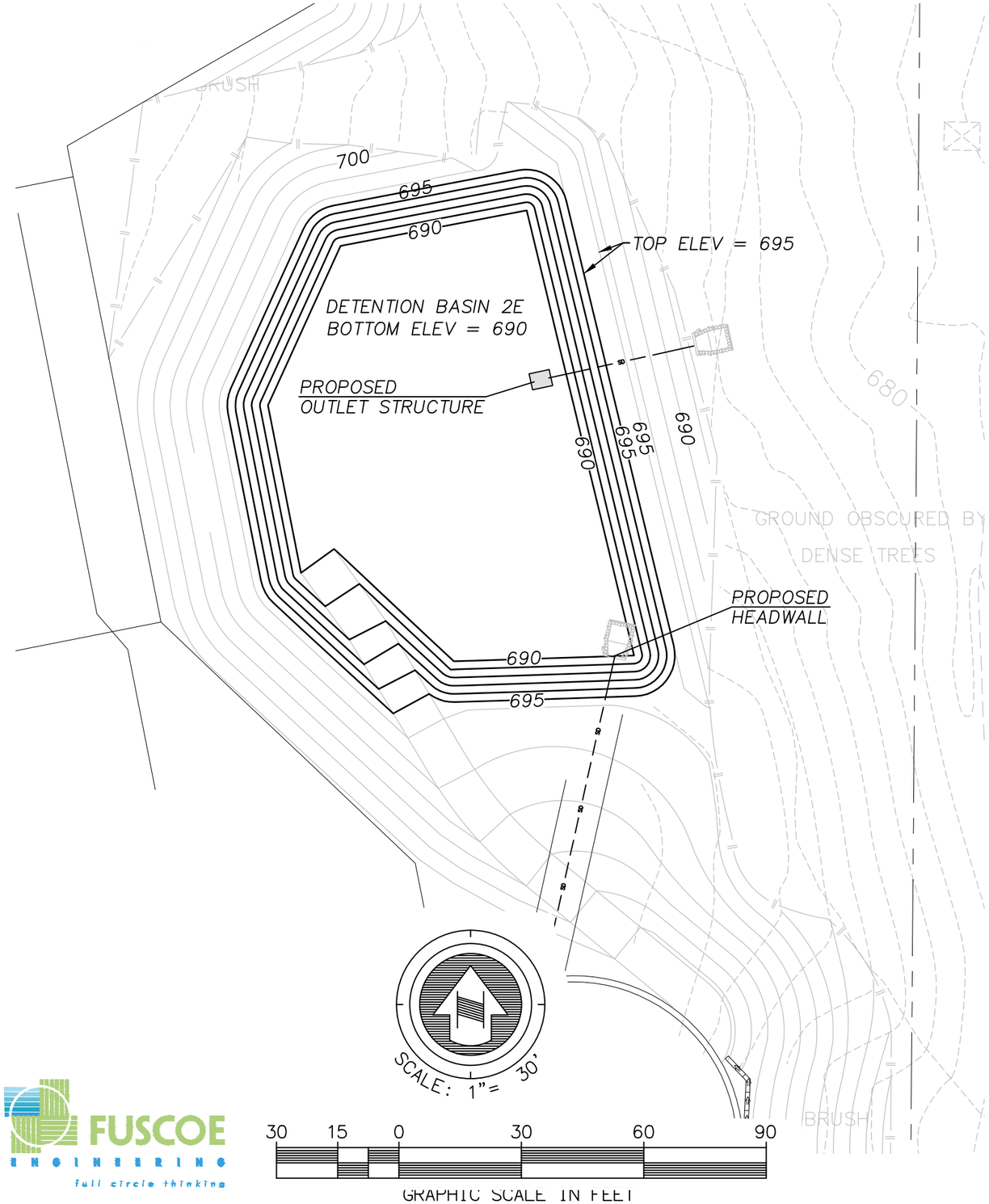

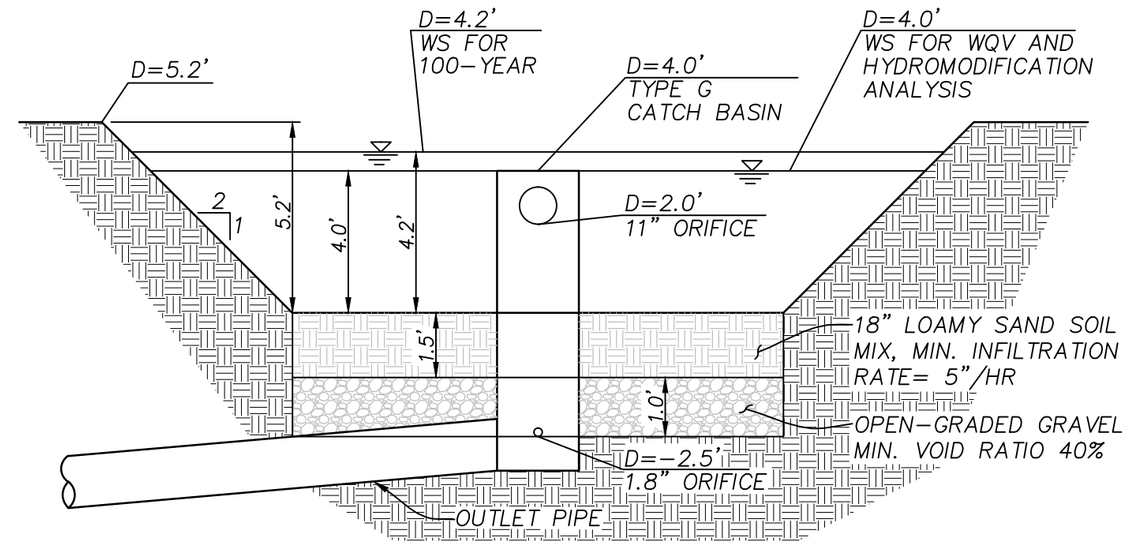

DMA 2E

FUSCOE ENGINEERING
full circle thinking

VALIANO
PROPOSED DETENTION BASIN
BASIN 2E

M:\PROJECTS\2080 INTEGRAL COMMUNITIES\007-02 EDEN HILLS ENGINEERING\ENG\STORMWATER\H-H\DETENTION BASIN DETAILS.DWG (02-04-15 11:25:57AM) PLOTTED BY: roberts

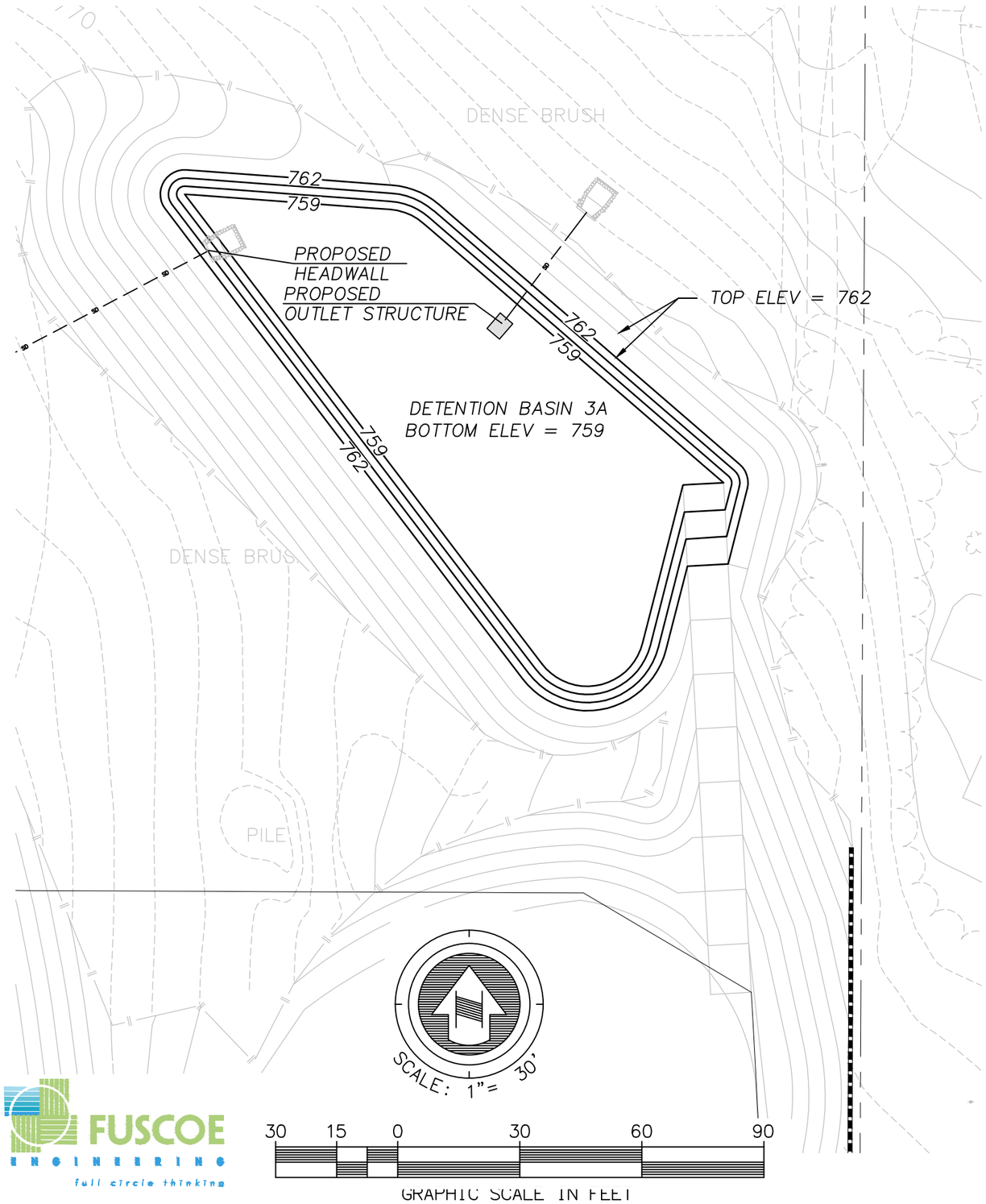

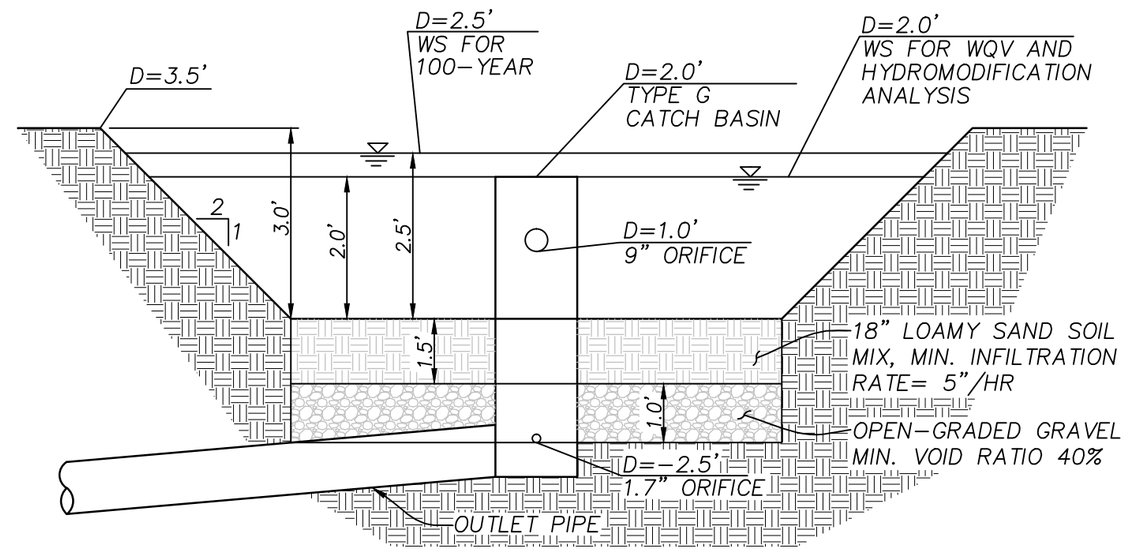

DMA 3A

FUSCOE ENGINEERING
full circle thinking

VALIANO
PROPOSED DETENTION BASIN
BASIN 3A

M:\PROJECTS\02890 INTEGRAL COMMUNITIES\007-02 EDEN HILLS ENGINEERING\DWG\STORMWATER\H-H\DETENTION BASIN DETAILS.DWG (02-04-15 11:28:11AM) PLOTTED BY: mdavis

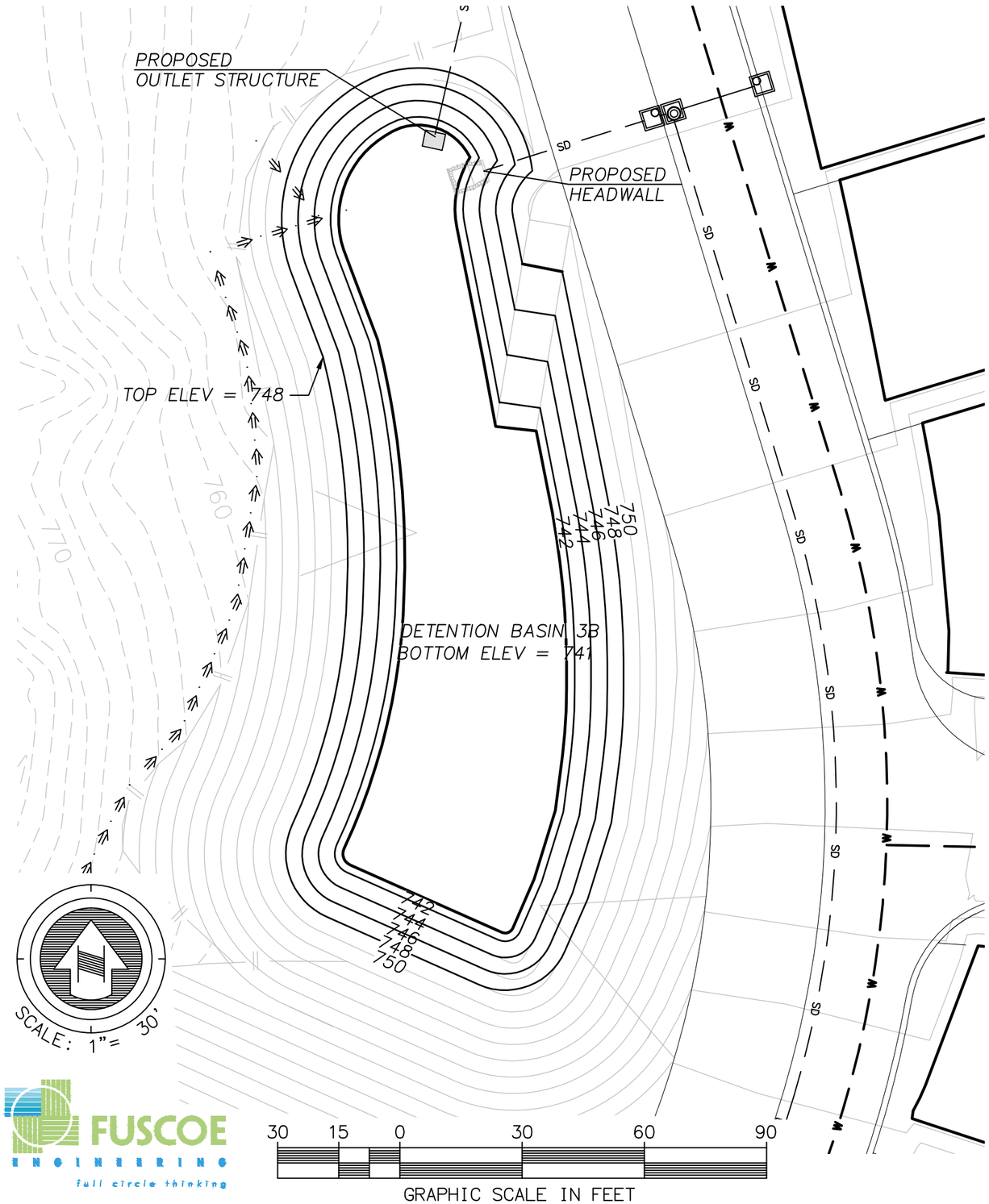

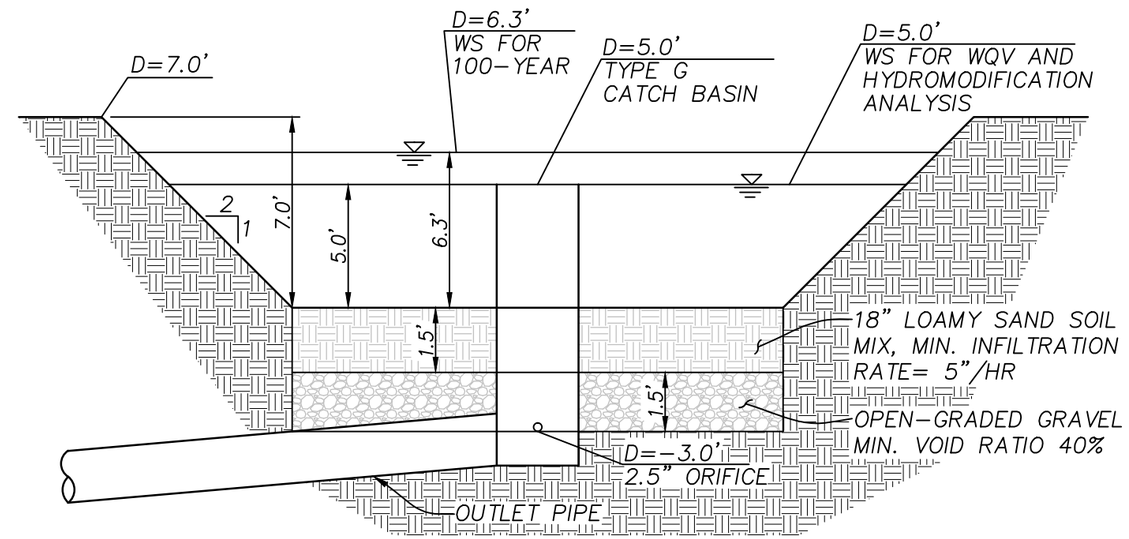

DMA 3B

FUSCOE ENGINEERING
full circle thinking

VALIANO
PROPOSED DETENTION BASIN
BASIN 3B

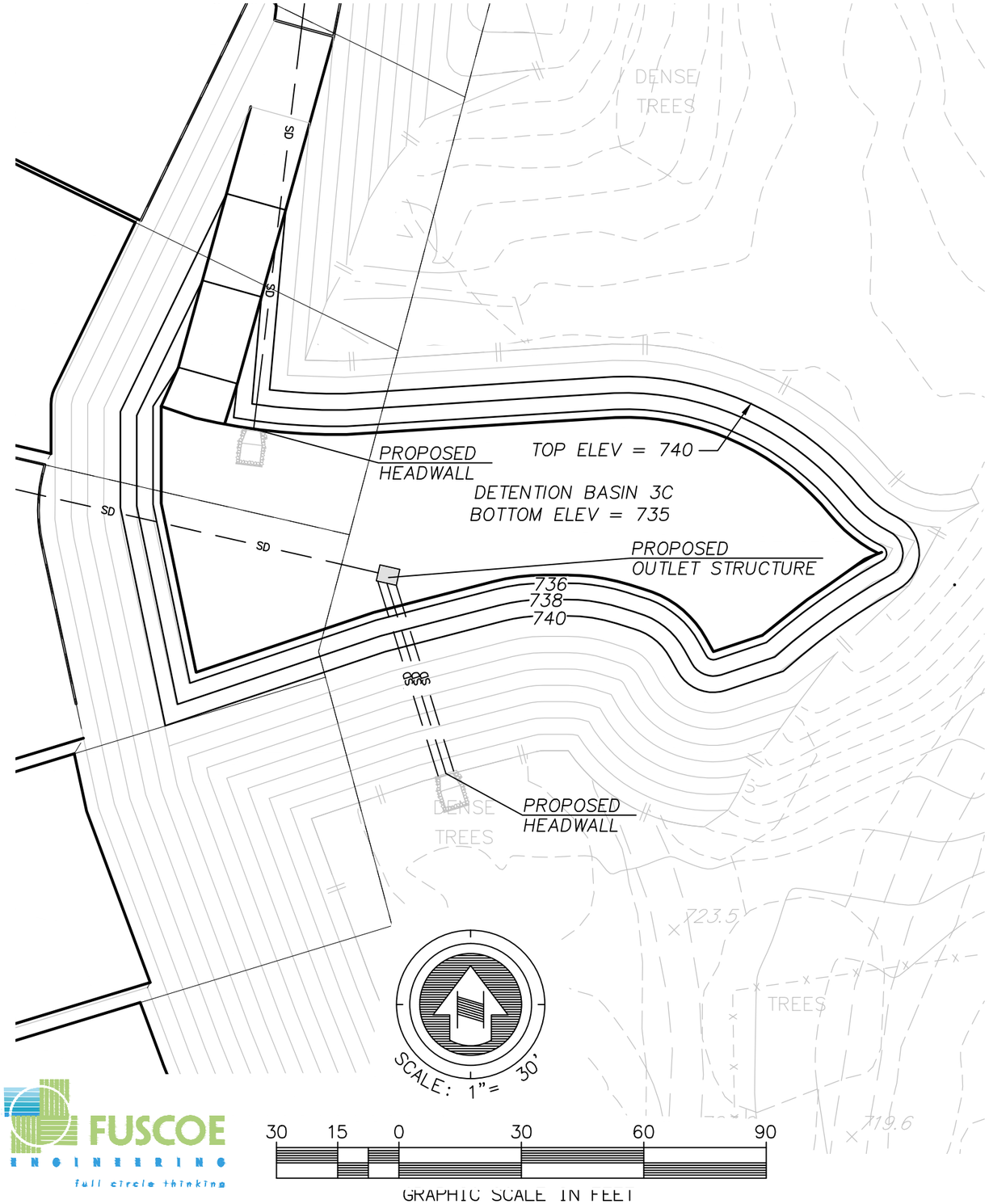

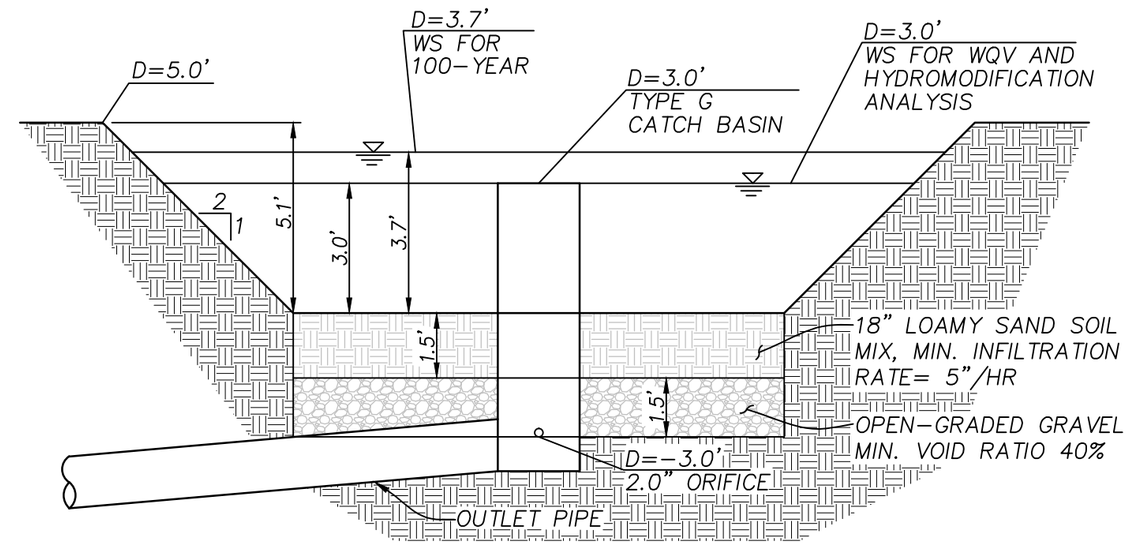

DMA 3C

FUSCOE ENGINEERING
full circle thinking

VALIANO
PROPOSED DETENTION BASIN
BASIN 3C

M:\PROJECTS\02690 INTEGRAL COMMUNITIES\007-02 EDEN HILLS ENGINEERING\DWG\STORMWATER\H-H\DETENTION BASIN DETAILS.DWG (10-16-15 4:17:12PM) PLOTTED BY: Keith Wei

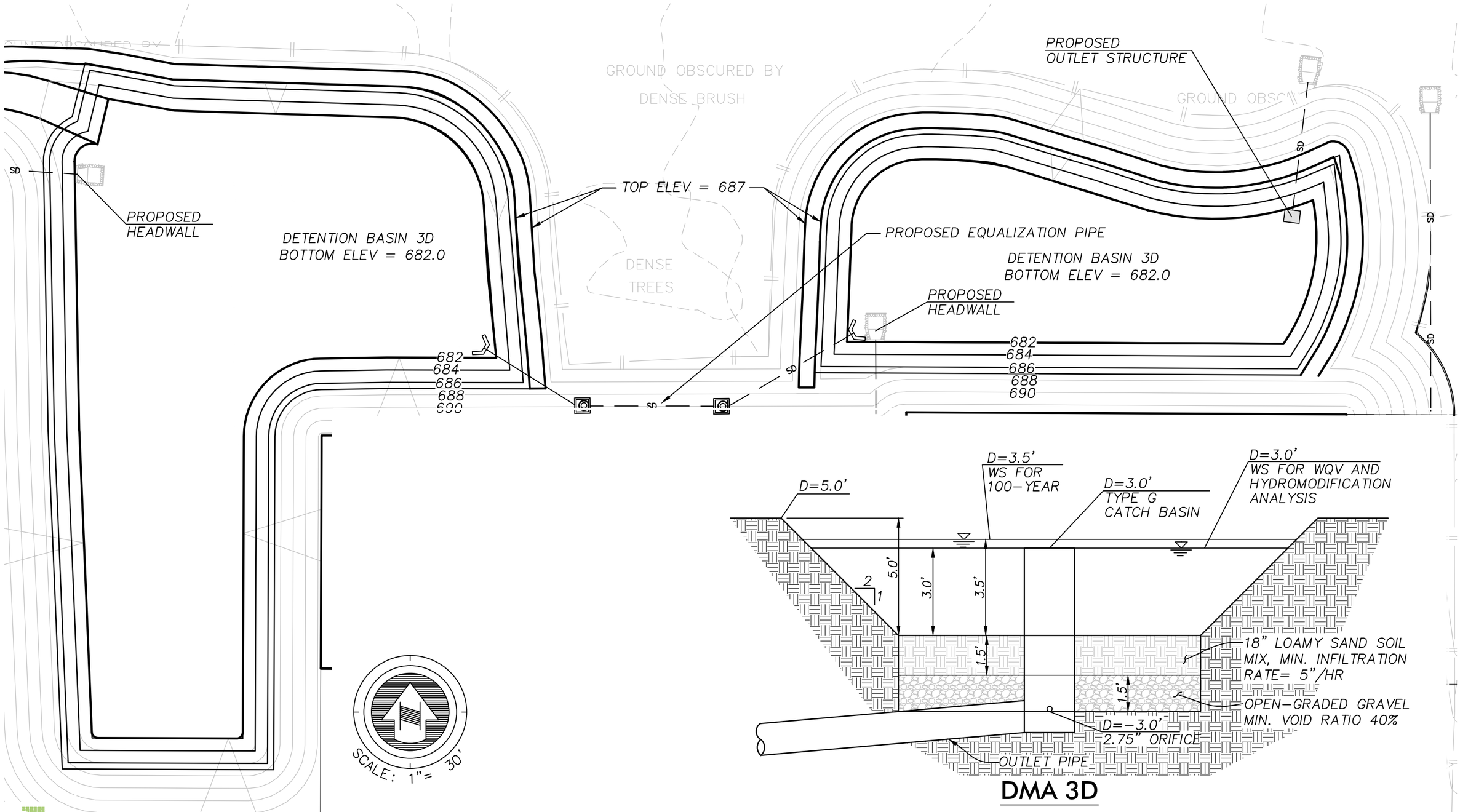

DMA 3D

FUSCOE ENGINEERING
full circle thinking

VALIANO
PROPOSED DETENTION BASIN
BASIN 3D

M:\PROJECTS\02690 INTEGRAL COMMUNITIES\007-02 EDDY HILLS ENGINEERING\ENG\STORMWATER\H-H\DETENTION BASIN DETAILS.DWG (10-16-15 4:18:17PM) PLOTTED BY: Kevin Wei

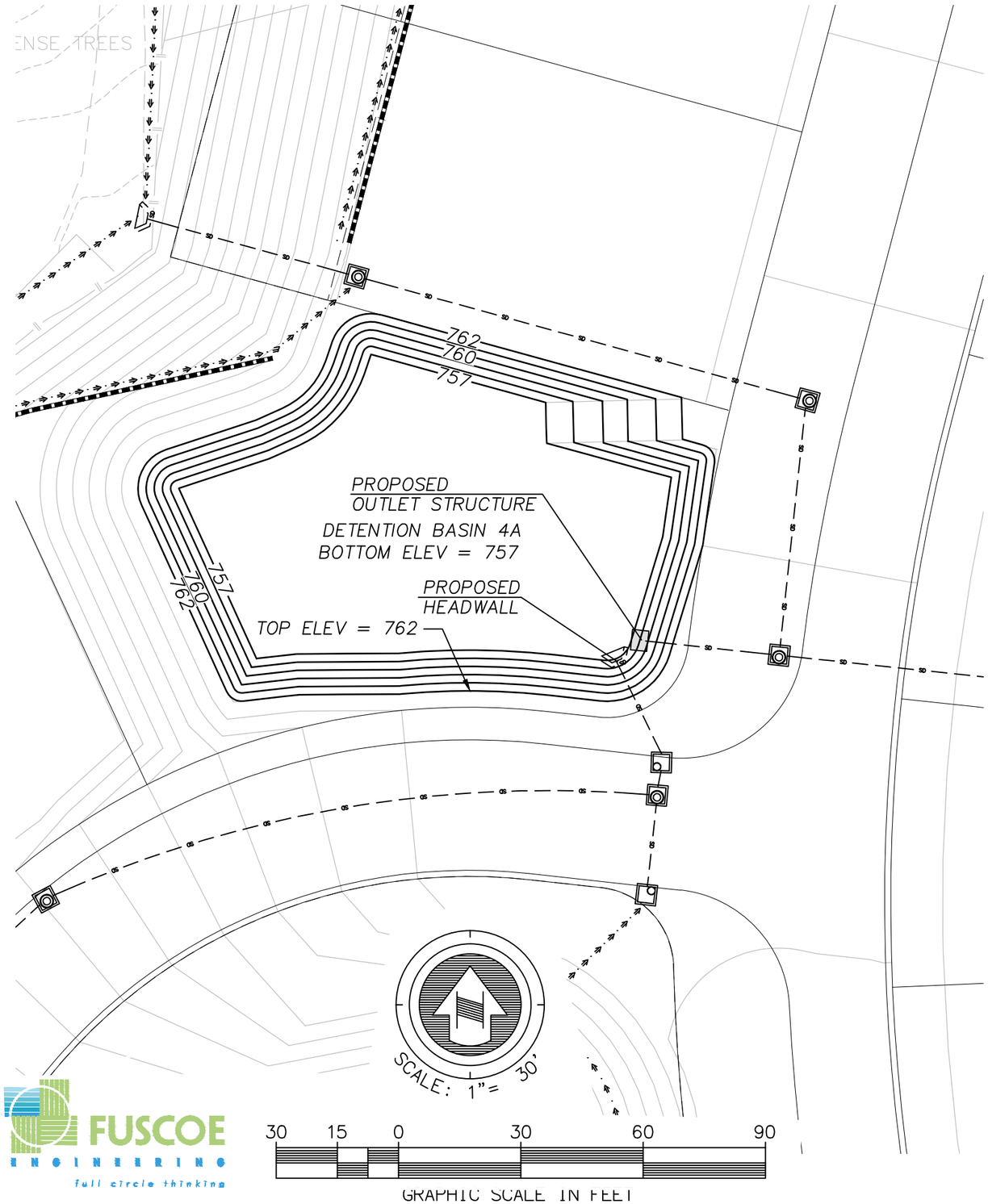

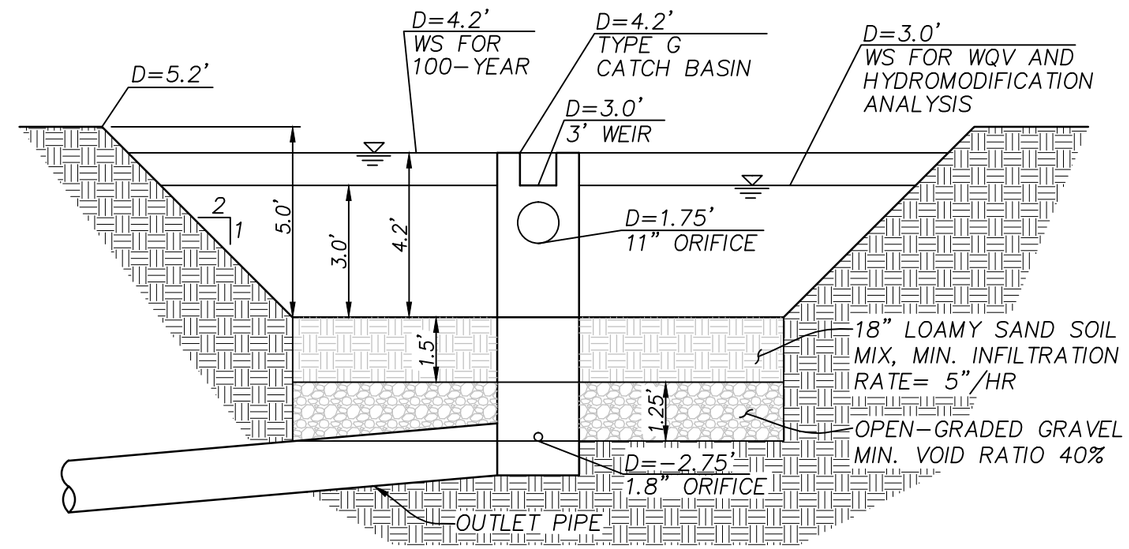

DMA 4A

FUSCOE ENGINEERING
full circle thinking

VALIANO
PROPOSED DETENTION BASIN
BASIN 4A

M:\PROJECTS\02690 INTEGRAL COMMUNITIES\007-02 EDDY HILLS ENGINEERING\ENG\STORMWATER\H-H\DETENTION BASIN DETAILS.DWG (02-04-15 11:33:54AM) PLOTTED BY: roberts

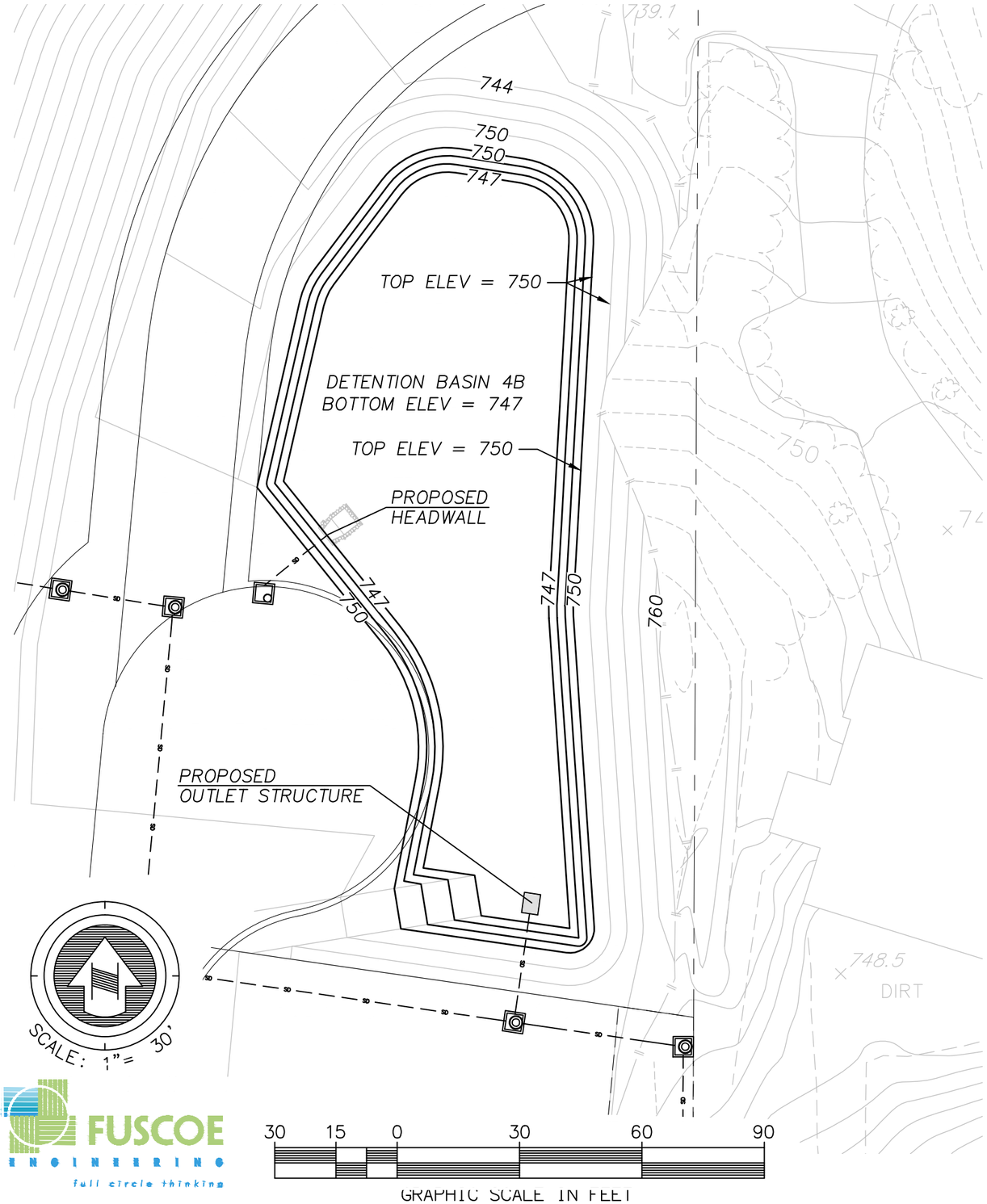

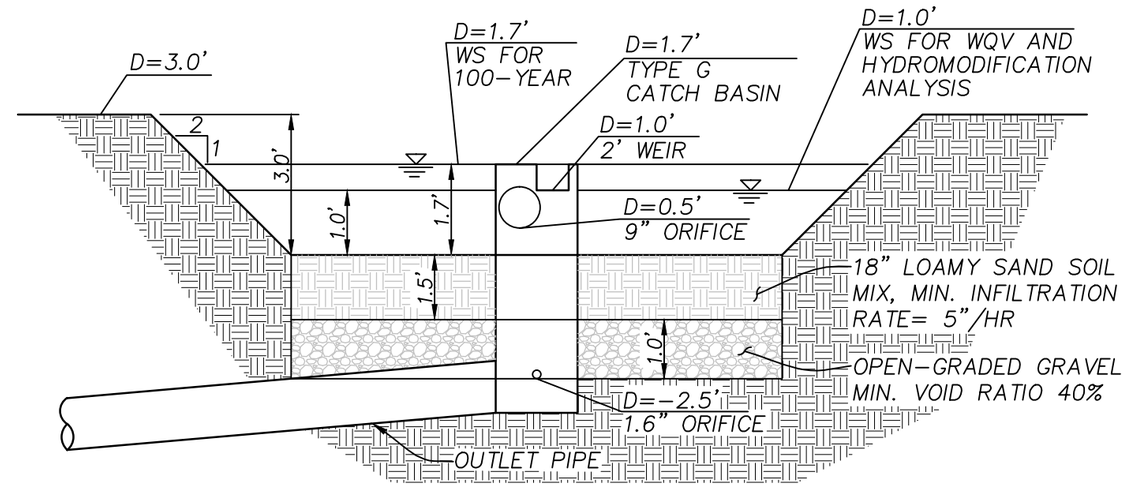

DMA 4B

FUSCOE ENGINEERING
full circle thinking

VALIANO
PROPOSED DETENTION BASIN
BASIN 4B

M:\PROJECTS\02690 INTEGRAL COMMUNITIES\007-02 EDEN HILLS ENGINEERING\DWG\STORMWATER\H-H\DETENTION BASIN DETAILS.DWG (02-04-15 11:35:07AM) PLOTTED BY: roberts

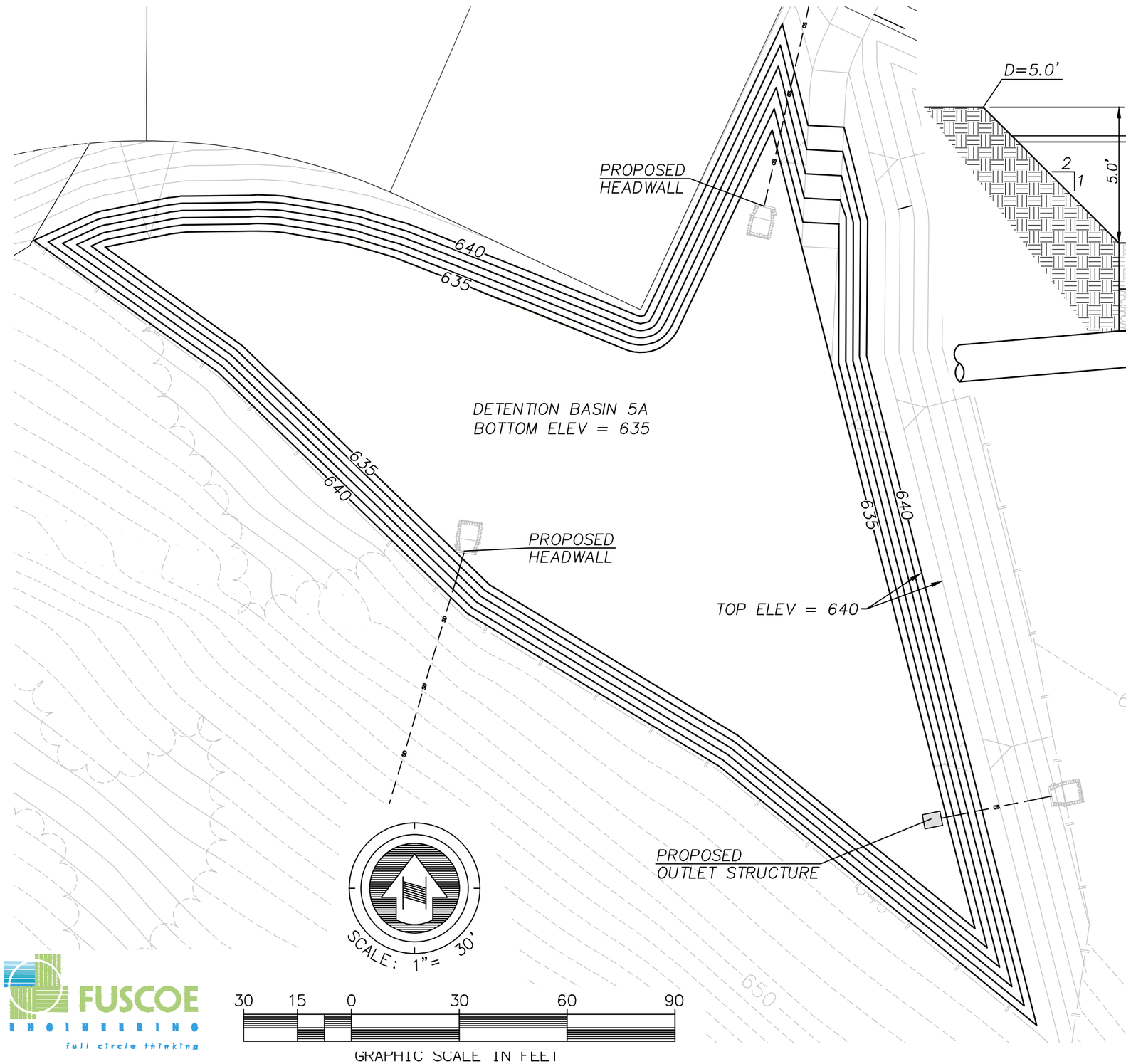

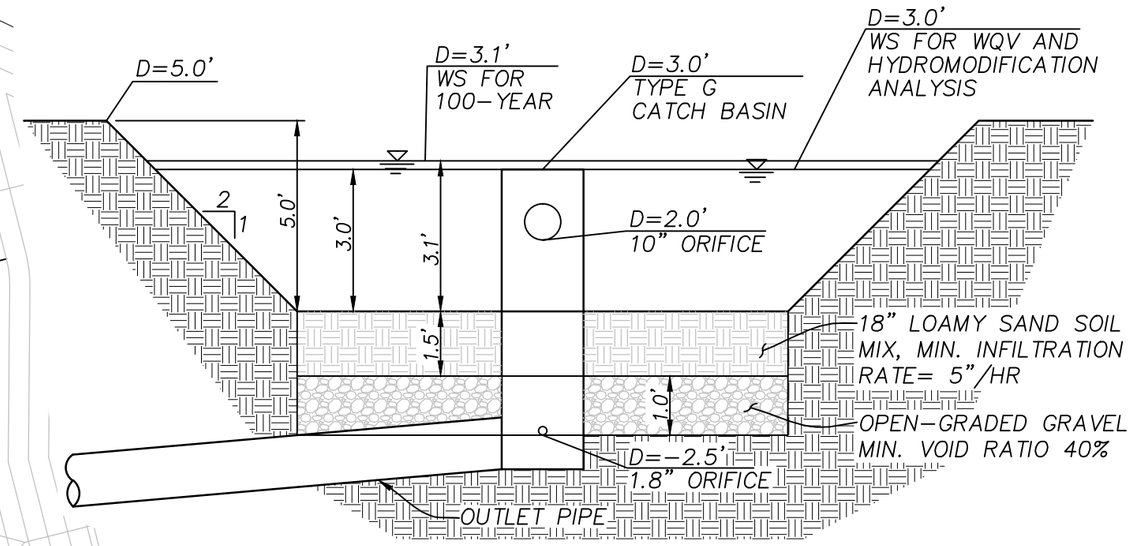

DMA 5A

FUSCOE ENGINEERING
full circle thinking

VALIANO
PROPOSED DETENTION BASIN
BASIN 5A

M:\PROJECTS\02890 INTEGRAL COMMUNITIES\002-02 EDEN HILLS ENGINEERING\PN\STORMWATER\H-H\DETENTION BASIN DETAILS.DWG (02-04-15 11:36:23AM) PLOTTED BY: roberts

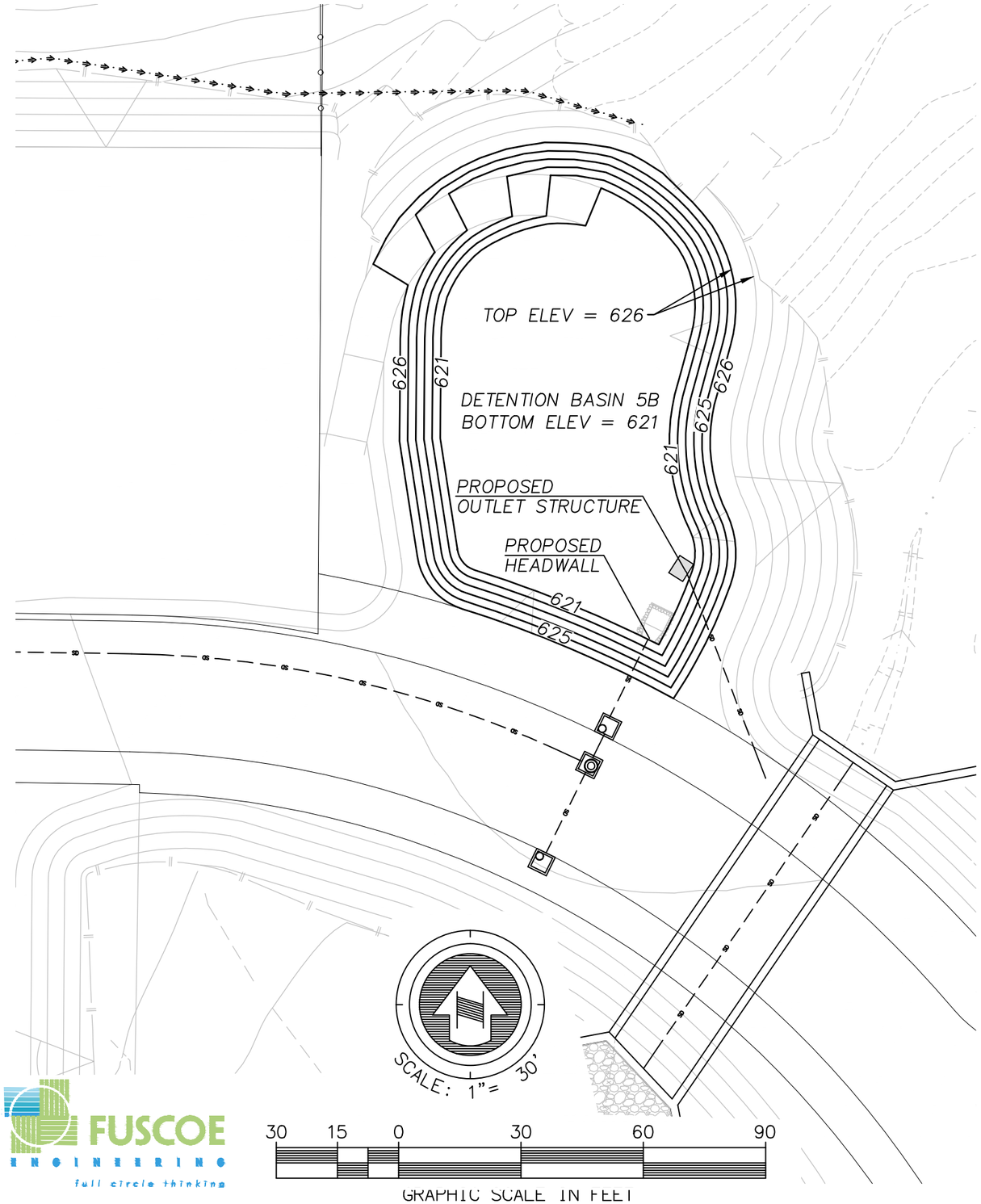

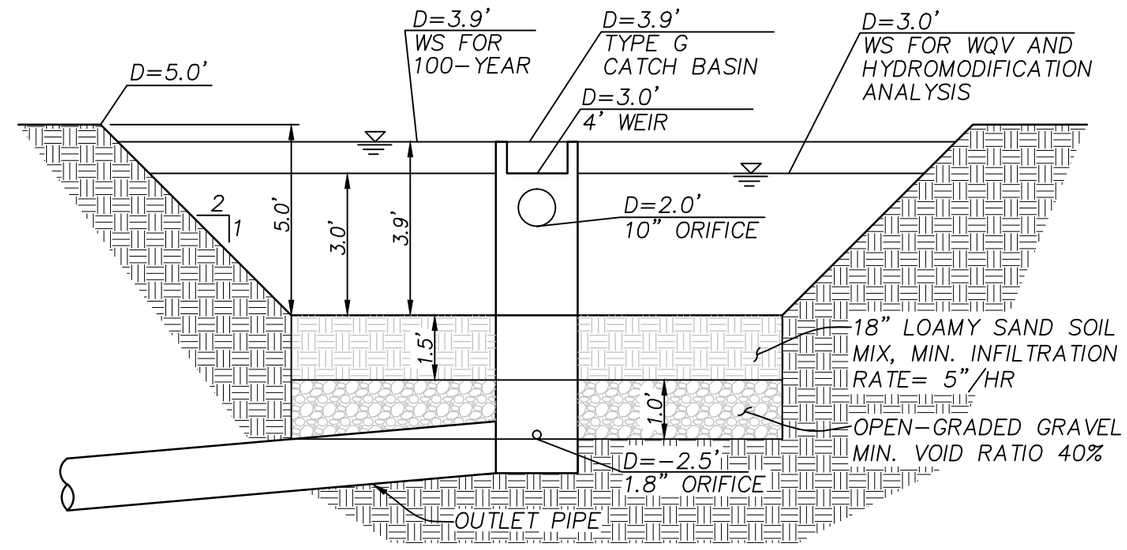

DMA 5B

FUSCOE ENGINEERING
full circle thinking

VALIANO
PROPOSED DETENTION BASIN
BASIN 5B

M:\PROJECTS\02890 INTEGRAL COMMUNITIES\007-02 EDEN HILLS ENGINEERING\DWG\STORMWATER\H-H\DETENTION BASIN DETAILS.DWG (02-04-15 11:54:42AM) PLOTTED BY: roberts

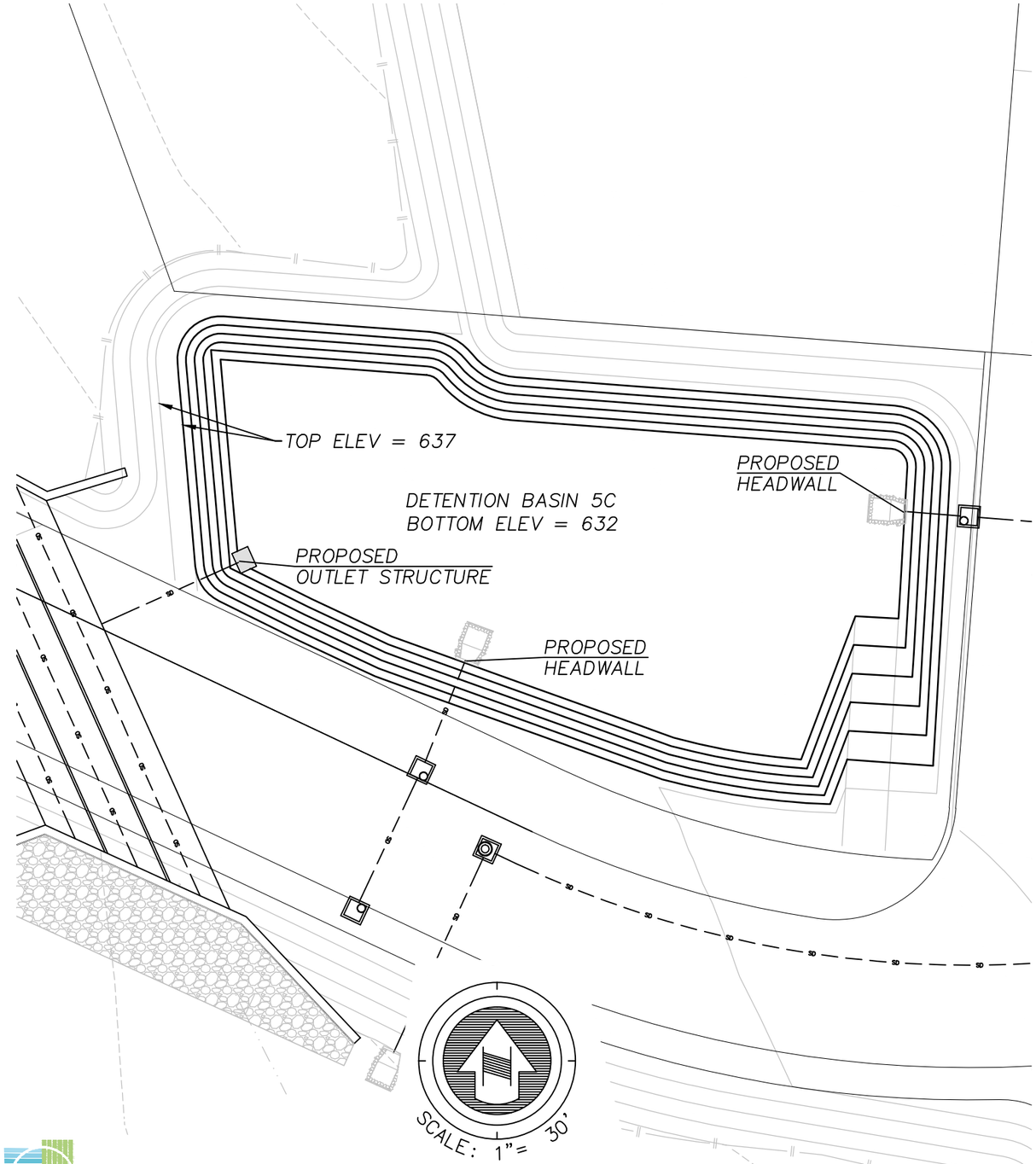

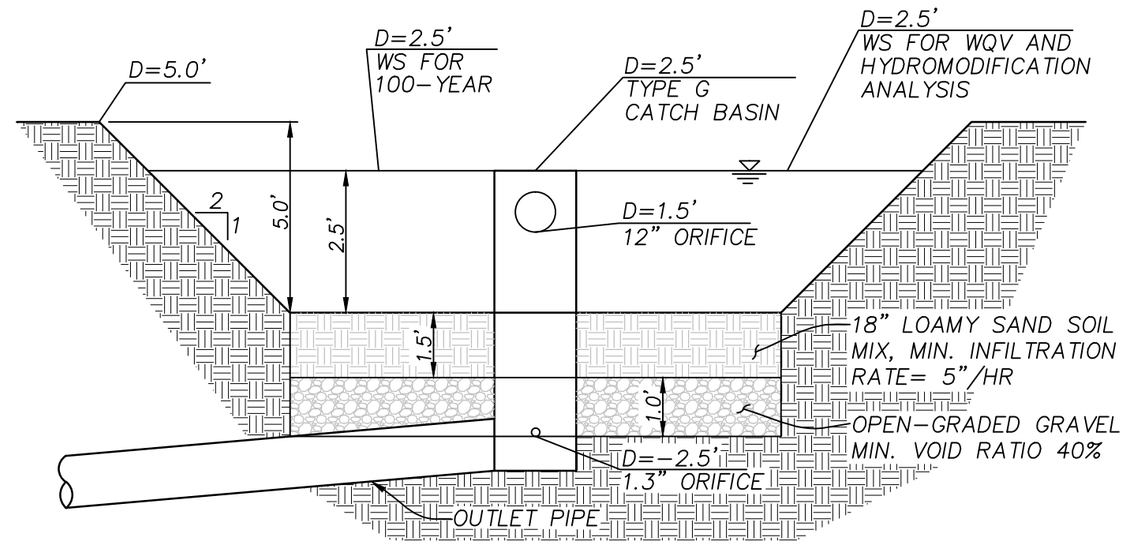

DMA 5C

FUSCOE ENGINEERING
full circle thinking

30 15 0 30 60 90
GRAPHIC SCALE IN FEET

VALIANO
PROPOSED DETENTION BASIN
BASIN 5C

M:\PROJECTS\02890 INTEGRAL COMMUNITIES\027-02 EDEN HILLS ENGINEERING\DWG\STORMWATER\H-H\DETENTION BASIN DETAILS.DWG (02-04-15 11:55:44AM) PLOTTED BY: roberts

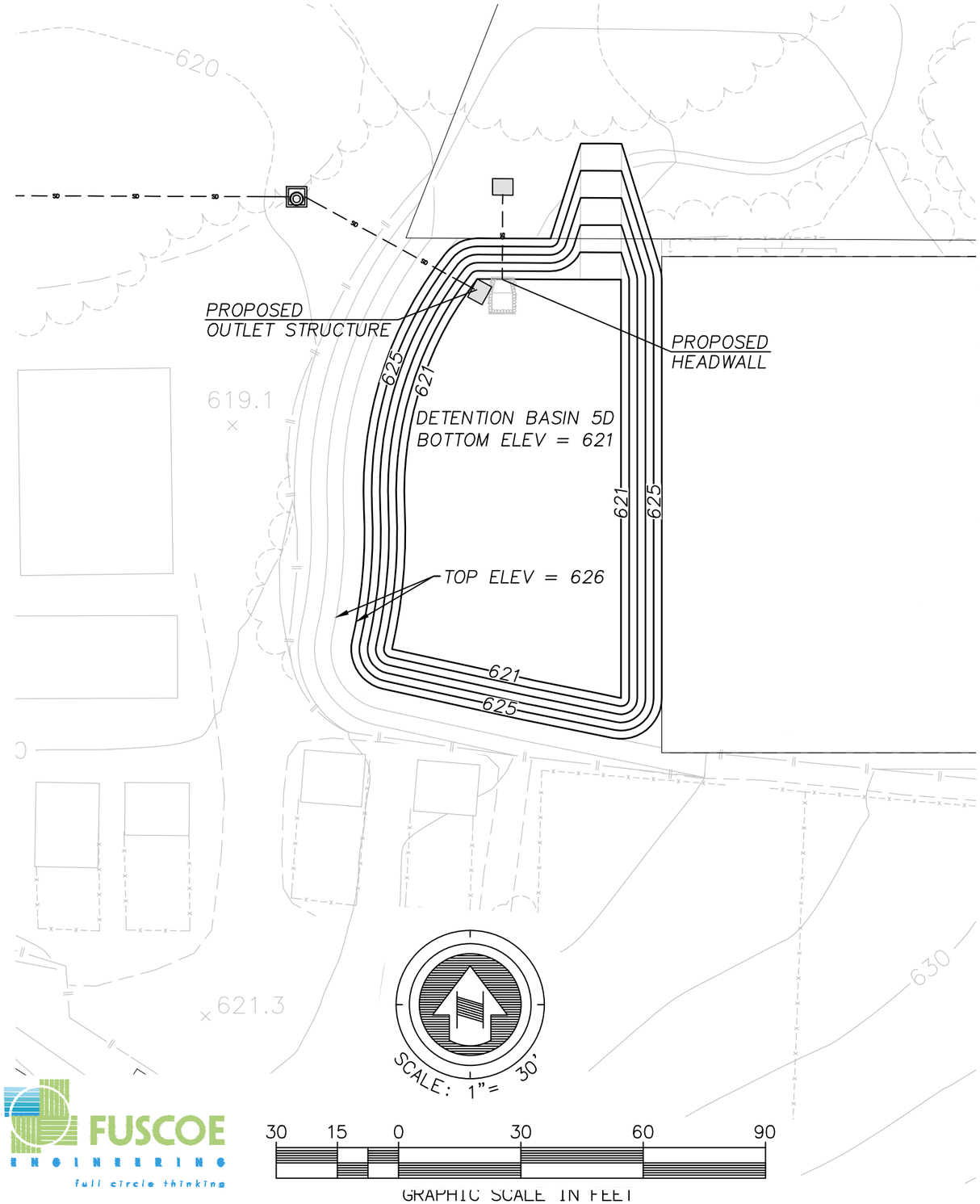

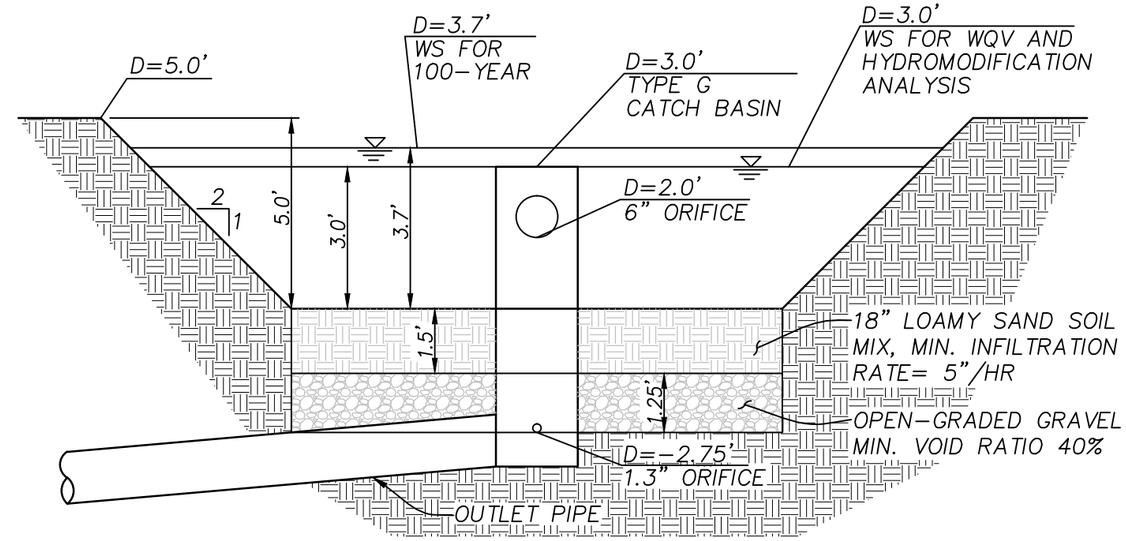

DMA 5D

FUSCOE ENGINEERING
full circle thinking

VALIANO
PROPOSED DETENTION BASIN
BASIN 5D

M:\PROJECTS\02690 INTEGRAL COMMUNITIES\007-02 EDEN HILLS ENGINEERING\ENG\STORMWATER\H-H\DETENTION BASIN DETAILS.DWG (02-04-15 11:56:46AM) PLOTTED BY: roberts

Basin 1
Proposed Hydrology

RATIONAL METHOD HYDROGRAPH PROGRAM
COPYRIGHT 1992, 2001 RICK ENGINEERING COMPANY
RUN DATE 10/22/2014

TIME OF CONCENTRATION 6 MIN.
6 HOUR RAINFALL 3.2 INCHES
BASIN AREA 3.1 ACRES
RUNOFF COEFFICIENT 0.71
PEAK DISCHARGE 15.15 CFS

62 INTERVALS
TIME (MIN) = 0 DISCHARGE (CFS) = 0
TIME (MIN) = 6 DISCHARGE (CFS) = 0.4
TIME (MIN) = 12 DISCHARGE (CFS) = 0.4
TIME (MIN) = 18 DISCHARGE (CFS) = 0.4
TIME (MIN) = 24 DISCHARGE (CFS) = 0.4
TIME (MIN) = 30 DISCHARGE (CFS) = 0.4
TIME (MIN) = 36 DISCHARGE (CFS) = 0.5
TIME (MIN) = 42 DISCHARGE (CFS) = 0.5
TIME (MIN) = 48 DISCHARGE (CFS) = 0.5
TIME (MIN) = 54 DISCHARGE (CFS) = 0.5
TIME (MIN) = 60 DISCHARGE (CFS) = 0.5
TIME (MIN) = 66 DISCHARGE (CFS) = 0.5
TIME (MIN) = 72 DISCHARGE (CFS) = 0.5
TIME (MIN) = 78 DISCHARGE (CFS) = 0.5
TIME (MIN) = 84 DISCHARGE (CFS) = 0.5
TIME (MIN) = 90 DISCHARGE (CFS) = 0.6
TIME (MIN) = 96 DISCHARGE (CFS) = 0.6
TIME (MIN) = 102 DISCHARGE (CFS) = 0.6
TIME (MIN) = 108 DISCHARGE (CFS) = 0.6
TIME (MIN) = 114 DISCHARGE (CFS) = 0.6
TIME (MIN) = 120 DISCHARGE (CFS) = 0.6
TIME (MIN) = 126 DISCHARGE (CFS) = 0.7
TIME (MIN) = 132 DISCHARGE (CFS) = 0.7
TIME (MIN) = 138 DISCHARGE (CFS) = 0.7
TIME (MIN) = 144 DISCHARGE (CFS) = 0.7
TIME (MIN) = 150 DISCHARGE (CFS) = 0.8
TIME (MIN) = 156 DISCHARGE (CFS) = 0.8
TIME (MIN) = 162 DISCHARGE (CFS) = 0.8
TIME (MIN) = 168 DISCHARGE (CFS) = 0.9
TIME (MIN) = 174 DISCHARGE (CFS) = 0.9
TIME (MIN) = 180 DISCHARGE (CFS) = 1
TIME (MIN) = 186 DISCHARGE (CFS) = 1

TIME (MIN) = 192 DISCHARGE (CFS) = 1.1
TIME (MIN) = 198 DISCHARGE (CFS) = 1.2
TIME (MIN) = 204 DISCHARGE (CFS) = 1.3
TIME (MIN) = 210 DISCHARGE (CFS) = 1.5
TIME (MIN) = 216 DISCHARGE (CFS) = 1.6
TIME (MIN) = 222 DISCHARGE (CFS) = 2
TIME (MIN) = 228 DISCHARGE (CFS) = 2.2
TIME (MIN) = 234 DISCHARGE (CFS) = 3.3
TIME (MIN) = 240 DISCHARGE (CFS) = 6
TIME (MIN) = 246 DISCHARGE (CFS) = 15.15
TIME (MIN) = 252 DISCHARGE (CFS) = 2.6
TIME (MIN) = 258 DISCHARGE (CFS) = 1.8
TIME (MIN) = 264 DISCHARGE (CFS) = 1.4
TIME (MIN) = 270 DISCHARGE (CFS) = 1.1
TIME (MIN) = 276 DISCHARGE (CFS) = 1
TIME (MIN) = 282 DISCHARGE (CFS) = 0.9
TIME (MIN) = 288 DISCHARGE (CFS) = 0.8
TIME (MIN) = 294 DISCHARGE (CFS) = 0.7
TIME (MIN) = 300 DISCHARGE (CFS) = 0.7
TIME (MIN) = 306 DISCHARGE (CFS) = 0.6
TIME (MIN) = 312 DISCHARGE (CFS) = 0.6
TIME (MIN) = 318 DISCHARGE (CFS) = 0.6
TIME (MIN) = 324 DISCHARGE (CFS) = 0.5
TIME (MIN) = 330 DISCHARGE (CFS) = 0.5
TIME (MIN) = 336 DISCHARGE (CFS) = 0.5
TIME (MIN) = 342 DISCHARGE (CFS) = 0.5
TIME (MIN) = 348 DISCHARGE (CFS) = 0.5
TIME (MIN) = 354 DISCHARGE (CFS) = 0.4
TIME (MIN) = 360 DISCHARGE (CFS) = 0.4
TIME (MIN) = 366 DISCHARGE (CFS) = 0

```
****************************************************************************
                  HYDRAULICS ELEMENTS - II  PROGRAM PACKAGE

                   STORAGE BASIN HYDROGRAPH ROUTING MODEL
****************************************************************************
         (c) Copyright 1983-2012 Advanced Engineering Software (aes)
             Ver. 19.0  Release Date: 06/01/2012  License ID 1355

                            Analysis prepared by:

                              Fuscoe Engineering
                              6390 Greenwich Dr.
                                  Suite 170
                             San Diego, CA 92122

 ************************** DESCRIPTION OF STUDY **************************
* PROPOSED HYDROLOGY                                                       *
* DETENTION BASIN 1                                                        *
* OCTOBER 2014                                                             *
 ***************************************************************************

    FILE NAME: BASIN01.DAT
    TIME/DATE OF STUDY: 13:22 10/22/2014
===============================================================================
    ENTERED INFORMATION:
-------------------------------------------------------------------------------
    TOTAL NUMBER OF INFLOW HYDROGRAPH INTERVALS =   62
    CONSTANT HYDROGRAPH TIME UNIT(MINUTES) =    6.000
    ASSUMED INITIAL DEPTH(FEET) IN STORAGE BASIN =    0.00
-------------------------------------------------------------------------------
    ENTERED INFLOW HYDROGRAPH ORDINATES(CFS):
    *INTERVAL    FLOW   *INTERVAL    FLOW   *INTERVAL    FLOW   *
    * NUMBER     (CFS)  * NUMBER     (CFS)  * NUMBER     (CFS)  *
    *    1:         0.00*    2:         0.40*    3:         0.40*
    *    4:         0.40*    5:         0.40*    6:         0.40*
    *    7:         0.50*    8:         0.50*    9:         0.50*
    *   10:         0.50*   11:         0.50*   12:         0.50*
    *   13:         0.50*   14:         0.50*   15:         0.50*
    *   16:         0.60*   17:         0.60*   18:         0.60*
    *   19:         0.60*   20:         0.60*   21:         0.60*
    *   22:         0.70*   23:         0.70*   24:         0.70*
    *   25:         0.70*   26:         0.80*   27:         0.80*
    *   28:         0.80*   29:         0.90*   30:         0.90*
    *   31:         1.00*   32:         1.00*   33:         1.10*
    *   34:         1.20*   35:         1.30*   36:         1.50*
    *   37:         1.60*   38:         2.00*   39:         2.20*
    *   40:         3.30*   41:         6.00*   42:        15.15*
    *   43:         2.60*   44:         1.80*   45:         1.40*
    *   46:         1.10*   47:         1.00*   48:         0.90*
    *   49:         0.80*   50:         0.70*   51:         0.70*
    *   52:         0.60*   53:         0.60*   54:         0.60*
    *   55:         0.50*   56:         0.50*   57:         0.50*
    *   58:         0.50*   59:         0.50*   60:         0.40*
    *   61:         0.40*   62:         0.00*
===============================================================================
    DEPTH-VS.-STORAGE AND DEPTH-VS.-DISCHARGE INFORMATION:
-------------------------------------------------------------------------------
    TOTAL NUMBER OF BASIN DEPTH INFORMATION ENTRIES =   7
-------------------------------------------------------------------------------
    *BASIN-DEPTH  STORAGE    OUTFLOW  **BASIN-DEPTH  STORAGE    OUTFLOW  *
    *   (FEET)  (ACRE-FEET)   (CFS)   **   (FEET)  (ACRE-FEET)   (CFS)   *
    *      0.000      0.000      0.000**      1.000      0.097      0.530*
```

```
    *      2.000      0.208      1.139**      3.000      0.335      1.519*
    *      4.000      0.477      1.821**      5.000      0.637     10.330*
    *      6.000      0.813     10.990**
*****************************************************************************
-----------------------------------------------------------------------------
    INITIAL BASIN DEPTH(FEET) =    0.00
    INITIAL BASIN STORAGE(ACRE-FEET) =       0.00
    INITIAL BASIN OUTFLOW(CFS) =       0.00
-----------------------------------------------------------------------------
-----------------------------------------------------------------------------
    BASIN STORAGE, OUTFLOW AND DEPTH ROUTING VALUES:
     INTERVAL   {S-O*DT/2}   {S+O*DT/2}
      NUMBER   (ACRE-FEET) (ACRE-FEET)
          1      0.00000     0.00000
          2      0.09481     0.09919
          3      0.20329     0.21271
          4      0.32872     0.34128
          5      0.46948     0.48452
          6      0.59431     0.67969
          7      0.76759     0.85841
    WHERE S=STORAGE(AF);O=OUTFLOW(AF/MIN.);DT=UNIT(MIN.)
-----------------------------------------------------------------------------



         *UNIT-HYDROGRAPH STORAGE-BASIN ROUTING*
    NOTE: COMPUTED BASIN DEPTH, OUTFLOW, AND STORAGE QUANTITIES
          OCCUR AT THE GIVEN TIME. BASIN INFLOW VALUES REPRESENT THE
          AVERAGE INFLOW DURING THE RECENT HYDROGRAPH UNIT INTERVAL.

    GRAPH NOTATION: "I"=MEAN UNIT INFLOW; "O"=OUTFLOW AT GIVEN TIME
-----------------------------------------------------------------------------
     TIME   INFLOW  OUTFLOW    STORAGE
    (HOURS) (CFS)    (CFS)    (ACRE-FT)  0.      4.      8.     11.     15.
       0.10     0.00     0.00       0.000 O       .       .       .       .
         [BASIN DEPTH(FEET) =    0.00]
       0.20     0.40     0.02       0.003 O       .       .       .       .
         [BASIN DEPTH(FEET) =    0.03]
       0.30     0.40     0.03       0.006 O       .       .       .       .
         [BASIN DEPTH(FEET) =    0.07]
       0.40     0.40     0.05       0.009 O       .       .       .       .
         [BASIN DEPTH(FEET) =    0.10]
       0.50     0.40     0.07       0.012 O       .       .       .       .
         [BASIN DEPTH(FEET) =    0.12]
       0.60     0.40     0.08       0.015 O       .       .       .       .
         [BASIN DEPTH(FEET) =    0.15]
       0.70     0.50     0.10       0.018 OI      .       .       .       .
         [BASIN DEPTH(FEET) =    0.19]
       0.80     0.50     0.12       0.021 OI      .       .       .       .
         [BASIN DEPTH(FEET) =    0.22]
       0.90     0.50     0.13       0.025 OI      .       .       .       .
         [BASIN DEPTH(FEET) =    0.25]
       1.00     0.50     0.15       0.027 OI      .       .       .       .
         [BASIN DEPTH(FEET) =    0.28]
       1.10     0.50     0.17       0.030 OI      .       .       .       .
         [BASIN DEPTH(FEET) =    0.31]
       1.20     0.50     0.18       0.033 OI      .       .       .       .
         [BASIN DEPTH(FEET) =    0.34]
       1.30     0.50     0.19       0.036 OI      .       .       .       .
         [BASIN DEPTH(FEET) =    0.37]
       1.40     0.50     0.21       0.038 OI      .       .       .       .
```

```
  [BASIN DEPTH(FEET) =    0.39]
1.50     0.50     0.22       0.040 OI      .       .       .       .
  [BASIN DEPTH(FEET) =    0.42]
1.60     0.60     0.24       0.043 OI      .       .       .       .
  [BASIN DEPTH(FEET) =    0.45]
1.70     0.60     0.25       0.046 OI      .       .       .       .
  [BASIN DEPTH(FEET) =    0.48]
1.80     0.60     0.27       0.049 OI      .       .       .       .
  [BASIN DEPTH(FEET) =    0.51]
1.90     0.60     0.28       0.052 OI      .       .       .       .
  [BASIN DEPTH(FEET) =    0.53]
2.00     0.60     0.30       0.054 OI      .       .       .       .
  [BASIN DEPTH(FEET) =    0.56]
2.10     0.60     0.31       0.057 OI      .       .       .       .
  [BASIN DEPTH(FEET) =    0.59]
2.20     0.70     0.33       0.060 OI      .       .       .       .
  [BASIN DEPTH(FEET) =    0.62]
2.30     0.70     0.34       0.063 OI      .       .       .       .
  [BASIN DEPTH(FEET) =    0.65]
2.40     0.70     0.36       0.066 OI      .       .       .       .
  [BASIN DEPTH(FEET) =    0.68]
2.50     0.70     0.38       0.069 OI      .       .       .       .
  [BASIN DEPTH(FEET) =    0.71]
2.60     0.80     0.39       0.072 OI      .       .       .       .
  [BASIN DEPTH(FEET) =    0.74]
2.70     0.80     0.41       0.075 OI      .       .       .       .
  [BASIN DEPTH(FEET) =    0.78]
2.80     0.80     0.43       0.079 OI      .       .       .       .
  [BASIN DEPTH(FEET) =    0.81]
2.90     0.90     0.45       0.082 OI      .       .       .       .
  [BASIN DEPTH(FEET) =    0.85]
3.00     0.90     0.47       0.086 OI      .       .       .       .
  [BASIN DEPTH(FEET) =    0.89]
3.10     1.00     0.49       0.090 .OI     .       .       .       .
  [BASIN DEPTH(FEET) =    0.93]
3.20     1.00     0.52       0.094 .OI     .       .       .       .
  [BASIN DEPTH(FEET) =    0.97]
3.30     1.10     0.54       0.099 .OI     .       .       .       .
  [BASIN DEPTH(FEET) =    1.02]
3.40     1.20     0.57       0.104 .OI     .       .       .       .
  [BASIN DEPTH(FEET) =    1.07]
3.50     1.30     0.60       0.110 .OI     .       .       .       .
  [BASIN DEPTH(FEET) =    1.12]
3.60     1.50     0.64       0.118 .O I    .       .       .       .
  [BASIN DEPTH(FEET) =    1.18]
3.70     1.60     0.69       0.125 .O I    .       .       .       .
  [BASIN DEPTH(FEET) =    1.25]
3.80     2.00     0.74       0.136 .O  I   .       .       .       .
  [BASIN DEPTH(FEET) =    1.35]
3.90     2.20     0.81       0.148 .O  I   .       .       .       .
  [BASIN DEPTH(FEET) =    1.46]
4.00     3.30     0.92       0.168 .O    I .       .       .       .
  [BASIN DEPTH(FEET) =    1.64]
4.10     6.00     1.14       0.209 . O     .   I   .       .       .
  [BASIN DEPTH(FEET) =    2.01]
4.20    15.15     1.48       0.323 .  O    .       .       .       I
  [BASIN DEPTH(FEET) =    2.91]
4.30     2.60     1.51       0.332 .  O I  .       .       .       .
  [BASIN DEPTH(FEET) =    2.98]
4.40     1.80     1.52       0.335 .  O    .       .       .       .
  [BASIN DEPTH(FEET) =    3.00]
4.50     1.40     1.52       0.334 . IO    .       .       .       .
  [BASIN DEPTH(FEET) =    2.99]
```

```
4.60     1.10     1.51       0.330 . IO    .       .       .       .
  [BASIN DEPTH(FEET) =    2.96]
4.70     1.00     1.49       0.326 . IO    .       .       .       .
  [BASIN DEPTH(FEET) =    2.93]
4.80     0.90     1.48       0.321 .I O    .       .       .       .
  [BASIN DEPTH(FEET) =    2.89]
4.90     0.80     1.46       0.316 .I O    .       .       .       .
  [BASIN DEPTH(FEET) =    2.85]
5.00     0.70     1.44       0.310 .I O    .       .       .       .
  [BASIN DEPTH(FEET) =    2.80]
5.10     0.70     1.42       0.304 .I O    .       .       .       .
  [BASIN DEPTH(FEET) =    2.75]
5.20     0.60     1.40       0.297 .IO     .       .       .       .
  [BASIN DEPTH(FEET) =    2.70]
5.30     0.60     1.39       0.290 .IO     .       .       .       .
  [BASIN DEPTH(FEET) =    2.65]
5.40     0.60     1.37       0.284 .IO     .       .       .       .
  [BASIN DEPTH(FEET) =    2.60]
5.50     0.50     1.34       0.277 .IO     .       .       .       .
  [BASIN DEPTH(FEET) =    2.54]
5.60     0.50     1.32       0.270 .IO     .       .       .       .
  [BASIN DEPTH(FEET) =    2.49]
5.70     0.50     1.30       0.263 .IO     .       .       .       .
  [BASIN DEPTH(FEET) =    2.43]
5.80     0.50     1.28       0.257 .IO     .       .       .       .
  [BASIN DEPTH(FEET) =    2.38]
5.90     0.50     1.27       0.250 .IO     .       .       .       .
  [BASIN DEPTH(FEET) =    2.33]
6.00     0.40     1.24       0.243 I O     .       .       .       .
  [BASIN DEPTH(FEET) =    2.28]
6.10     0.40     1.22       0.236 I O     .       .       .       .
  [BASIN DEPTH(FEET) =    2.22]
6.20     0.00     1.19       0.226 I O     .       .       .       .
  [BASIN DEPTH(FEET) =    2.14]
6.30     0.00     1.16       0.217 I O     .       .       .       .
  [BASIN DEPTH(FEET) =    2.07]
6.40     0.00     1.13       0.207 I O     .       .       .       .
  [BASIN DEPTH(FEET) =    1.99]
6.50     0.00     1.08       0.198 I O     .       .       .       .
  [BASIN DEPTH(FEET) =    1.91]
6.60     0.00     1.04       0.189 I O     .       .       .       .
  [BASIN DEPTH(FEET) =    1.83]
6.70     0.00     0.99       0.181 I O     .       .       .       .
  [BASIN DEPTH(FEET) =    1.75]
6.80     0.00     0.95       0.173 IO      .       .       .       .
  [BASIN DEPTH(FEET) =    1.68]
6.90     0.00     0.90       0.165 IO      .       .       .       .
  [BASIN DEPTH(FEET) =    1.61]
7.00     0.00     0.86       0.158 IO      .       .       .       .
  [BASIN DEPTH(FEET) =    1.55]
7.10     0.00     0.83       0.151 IO      .       .       .       .
  [BASIN DEPTH(FEET) =    1.48]
7.20     0.00     0.79       0.144 IO      .       .       .       .
  [BASIN DEPTH(FEET) =    1.42]
7.30     0.00     0.75       0.138 IO      .       .       .       .
  [BASIN DEPTH(FEET) =    1.37]
7.40     0.00     0.72       0.132 IO      .       .       .       .
  [BASIN DEPTH(FEET) =    1.31]
7.50     0.00     0.69       0.126 IO      .       .       .       .
  [BASIN DEPTH(FEET) =    1.26]
7.60     0.00     0.66       0.120 IO      .       .       .       .
  [BASIN DEPTH(FEET) =    1.21]
7.70     0.00     0.63       0.115 IO      .       .       .       .
```

```
   [BASIN DEPTH(FEET) =    1.16]
 7.80     0.00     0.60       0.110 IO      .       .       .       .
   [BASIN DEPTH(FEET) =    1.12]
 7.90     0.00     0.57       0.105 IO      .       .       .       .
   [BASIN DEPTH(FEET) =    1.07]
 8.00     0.00     0.55       0.100 IO      .       .       .       .
   [BASIN DEPTH(FEET) =    1.03]
 8.10     0.00     0.52       0.096 IO      .       .       .       .
   [BASIN DEPTH(FEET) =    0.99]
 8.20     0.00     0.50       0.092 IO      .       .       .       .
   [BASIN DEPTH(FEET) =    0.95]
 8.30     0.00     0.48       0.088 IO      .       .       .       .
   [BASIN DEPTH(FEET) =    0.90]
 8.40     0.00     0.46       0.084 O       .       .       .       .
   [BASIN DEPTH(FEET) =    0.86]
 8.50     0.00     0.44       0.080 O       .       .       .       .
   [BASIN DEPTH(FEET) =    0.83]
 8.60     0.00     0.42       0.077 O       .       .       .       .
   [BASIN DEPTH(FEET) =    0.79]
 8.70     0.00     0.40       0.073 O       .       .       .       .
   [BASIN DEPTH(FEET) =    0.75]
 8.80     0.00     0.38       0.070 O       .       .       .       .
   [BASIN DEPTH(FEET) =    0.72]
 8.90     0.00     0.37       0.067 O       .       .       .       .
   [BASIN DEPTH(FEET) =    0.69]
 9.00     0.00     0.35       0.064 O       .       .       .       .
   [BASIN DEPTH(FEET) =    0.66]
 9.10     0.00     0.33       0.061 O       .       .       .       .
   [BASIN DEPTH(FEET) =    0.63]
 9.20     0.00     0.32       0.058 O       .       .       .       .
   [BASIN DEPTH(FEET) =    0.60]
 9.30     0.00     0.30       0.056 O       .       .       .       .
   [BASIN DEPTH(FEET) =    0.58]
 9.40     0.00     0.29       0.053 O       .       .       .       .
   [BASIN DEPTH(FEET) =    0.55]
 9.50     0.00     0.28       0.051 O       .       .       .       .
   [BASIN DEPTH(FEET) =    0.53]
 9.60     0.00     0.27       0.049 O       .       .       .       .
   [BASIN DEPTH(FEET) =    0.50]
 9.70     0.00     0.25       0.047 O       .       .       .       .
   [BASIN DEPTH(FEET) =    0.48]
 9.80     0.00     0.24       0.045 O       .       .       .       .
   [BASIN DEPTH(FEET) =    0.46]
 9.90     0.00     0.23       0.043 O       .       .       .       .
   [BASIN DEPTH(FEET) =    0.44]
10.00     0.00     0.22       0.041 O       .       .       .       .
   [BASIN DEPTH(FEET) =    0.42]
```

BASIN 2A
PROPOSED HYDROLOGY

RATIONAL METHOD HYDROGRAPH PROGRAM
COPYRIGHT 1992, 2001 RICK ENGINEERING COMPANY
RUN DATE 10/22/2014

TIME OF CONCENTRATION 7 MIN.
6 HOUR RAINFALL 3.2 INCHES
BASIN AREA 3.4 ACRES
RUNOFF COEFFICIENT 0.71
PEAK DISCHARGE 15.6 CFS

53 INTERVALS
TIME (MIN) = 0 DISCHARGE (CFS) = 0
TIME (MIN) = 7 DISCHARGE (CFS) = 0.5
TIME (MIN) = 14 DISCHARGE (CFS) = 0.5
TIME (MIN) = 21 DISCHARGE (CFS) = 0.5
TIME (MIN) = 28 DISCHARGE (CFS) = 0.5
TIME (MIN) = 35 DISCHARGE (CFS) = 0.5
TIME (MIN) = 42 DISCHARGE (CFS) = 0.5
TIME (MIN) = 49 DISCHARGE (CFS) = 0.5
TIME (MIN) = 56 DISCHARGE (CFS) = 0.5
TIME (MIN) = 63 DISCHARGE (CFS) = 0.6
TIME (MIN) = 70 DISCHARGE (CFS) = 0.6
TIME (MIN) = 77 DISCHARGE (CFS) = 0.6
TIME (MIN) = 84 DISCHARGE (CFS) = 0.6
TIME (MIN) = 91 DISCHARGE (CFS) = 0.6
TIME (MIN) = 98 DISCHARGE (CFS) = 0.6
TIME (MIN) = 105 DISCHARGE (CFS) = 0.7
TIME (MIN) = 112 DISCHARGE (CFS) = 0.7
TIME (MIN) = 119 DISCHARGE (CFS) = 0.7
TIME (MIN) = 126 DISCHARGE (CFS) = 0.7
TIME (MIN) = 133 DISCHARGE (CFS) = 0.8
TIME (MIN) = 140 DISCHARGE (CFS) = 0.8
TIME (MIN) = 147 DISCHARGE (CFS) = 0.8
TIME (MIN) = 154 DISCHARGE (CFS) = 0.9
TIME (MIN) = 161 DISCHARGE (CFS) = 0.9
TIME (MIN) = 168 DISCHARGE (CFS) = 1
TIME (MIN) = 175 DISCHARGE (CFS) = 1
TIME (MIN) = 182 DISCHARGE (CFS) = 1.1
TIME (MIN) = 189 DISCHARGE (CFS) = 1.2
TIME (MIN) = 196 DISCHARGE (CFS) = 1.3
TIME (MIN) = 203 DISCHARGE (CFS) = 1.5
TIME (MIN) = 210 DISCHARGE (CFS) = 1.6
TIME (MIN) = 217 DISCHARGE (CFS) = 1.9

TIME (MIN) = 224 DISCHARGE (CFS) = 2.2
TIME (MIN) = 231 DISCHARGE (CFS) = 3.2
TIME (MIN) = 238 DISCHARGE (CFS) = 5.4
TIME (MIN) = 245 DISCHARGE (CFS) = 15.6
TIME (MIN) = 252 DISCHARGE (CFS) = 2.6
TIME (MIN) = 259 DISCHARGE (CFS) = 1.7
TIME (MIN) = 266 DISCHARGE (CFS) = 1.4
TIME (MIN) = 273 DISCHARGE (CFS) = 1.1
TIME (MIN) = 280 DISCHARGE (CFS) = 1
TIME (MIN) = 287 DISCHARGE (CFS) = 0.9
TIME (MIN) = 294 DISCHARGE (CFS) = 0.8
TIME (MIN) = 301 DISCHARGE (CFS) = 0.7
TIME (MIN) = 308 DISCHARGE (CFS) = 0.7
TIME (MIN) = 315 DISCHARGE (CFS) = 0.6
TIME (MIN) = 322 DISCHARGE (CFS) = 0.6
TIME (MIN) = 329 DISCHARGE (CFS) = 0.6
TIME (MIN) = 336 DISCHARGE (CFS) = 0.5
TIME (MIN) = 343 DISCHARGE (CFS) = 0.5
TIME (MIN) = 350 DISCHARGE (CFS) = 0.5
TIME (MIN) = 357 DISCHARGE (CFS) = 0.5
TIME (MIN) = 364 DISCHARGE (CFS) = 0

```
****************************************************************************
                  HYDRAULICS ELEMENTS - II  PROGRAM PACKAGE

                   STORAGE BASIN HYDROGRAPH ROUTING MODEL
****************************************************************************
         (c) Copyright 1983-2012 Advanced Engineering Software (aes)
             Ver. 19.0  Release Date: 06/01/2012  License ID 1355

                             Analysis prepared by:

                               Fuscoe Engineering
                               6390 Greenwich Dr.
                                   Suite 170
                              San Diego, CA 92122

 ************************** DESCRIPTION OF STUDY **************************
* PROPOSED HYDROLOGY                                                       *
* DETENTION BASIN 2A                                                       *
* OCTOBER 2014                                                             *
 ***************************************************************************

    FILE NAME: BASIN2A.DAT
    TIME/DATE OF STUDY: 13:55 10/22/2014
===============================================================================
    ENTERED INFORMATION:
-------------------------------------------------------------------------------
    TOTAL NUMBER OF INFLOW HYDROGRAPH INTERVALS =   53
    CONSTANT HYDROGRAPH TIME UNIT(MINUTES) =    7.000
    ASSUMED INITIAL DEPTH(FEET) IN STORAGE BASIN =    0.00
-------------------------------------------------------------------------------
    ENTERED INFLOW HYDROGRAPH ORDINATES(CFS):
    *INTERVAL    FLOW   *INTERVAL    FLOW   *INTERVAL    FLOW   *
    * NUMBER     (CFS)  * NUMBER     (CFS)  * NUMBER     (CFS)  *
    *    1:         0.00*    2:         0.50*    3:         0.50*
    *    4:         0.50*    5:         0.50*    6:         0.50*
    *    7:         0.50*    8:         0.50*    9:         0.50*
    *   10:         0.60*   11:         0.60*   12:         0.60*
    *   13:         0.60*   14:         0.60*   15:         0.60*
    *   16:         0.70*   17:         0.70*   18:         0.70*
    *   19:         0.70*   20:         0.80*   21:         0.80*
    *   22:         0.80*   23:         0.90*   24:         0.90*
    *   25:         1.00*   26:         1.00*   27:         1.10*
    *   28:         1.20*   29:         1.30*   30:         1.50*
    *   31:         1.60*   32:         1.90*   33:         2.20*
    *   34:         3.20*   35:         5.40*   36:        15.60*
    *   37:         2.60*   38:         1.70*   39:         1.40*
    *   40:         1.10*   41:         1.00*   42:         0.90*
    *   43:         0.80*   44:         0.70*   45:         0.70*
    *   46:         0.60*   47:         0.60*   48:         0.60*
    *   49:         0.50*   50:         0.50*   51:         0.50*
    *   52:         0.50*   53:         0.00*
===============================================================================
    DEPTH-VS.-STORAGE AND DEPTH-VS.-DISCHARGE INFORMATION:
-------------------------------------------------------------------------------
    TOTAL NUMBER OF BASIN DEPTH INFORMATION ENTRIES =   5
-------------------------------------------------------------------------------
    *BASIN-DEPTH  STORAGE    OUTFLOW  **BASIN-DEPTH  STORAGE    OUTFLOW  *
    *   (FEET)  (ACRE-FEET)   (CFS)   **   (FEET)  (ACRE-FEET)   (CFS)   *
    *      0.000      0.000      0.000**      1.000      0.147      0.057*
    *      2.000      0.312      0.305**      3.000      0.494      1.515*
    *      4.000      0.700     26.050**
****************************************************************************
```

```
-----------------------------------------------------------------------------
    INITIAL BASIN DEPTH(FEET) =    0.00
    INITIAL BASIN STORAGE(ACRE-FEET) =       0.00
    INITIAL BASIN OUTFLOW(CFS) =       0.00
-----------------------------------------------------------------------------
-----------------------------------------------------------------------------
    BASIN STORAGE, OUTFLOW AND DEPTH ROUTING VALUES:
     INTERVAL   {S-O*DT/2}   {S+O*DT/2}
      NUMBER   (ACRE-FEET) (ACRE-FEET)
          1      0.00000     0.00000
          2      0.14673     0.14727
          3      0.31053     0.31347
          4      0.48670     0.50130
          5      0.57441     0.82559
    WHERE S=STORAGE(AF);O=OUTFLOW(AF/MIN.);DT=UNIT(MIN.)
-----------------------------------------------------------------------------



         *UNIT-HYDROGRAPH STORAGE-BASIN ROUTING*
    NOTE: COMPUTED BASIN DEPTH, OUTFLOW, AND STORAGE QUANTITIES
          OCCUR AT THE GIVEN TIME. BASIN INFLOW VALUES REPRESENT THE
          AVERAGE INFLOW DURING THE RECENT HYDROGRAPH UNIT INTERVAL.

    GRAPH NOTATION: "I"=MEAN UNIT INFLOW; "O"=OUTFLOW AT GIVEN TIME
-----------------------------------------------------------------------------
     TIME   INFLOW  OUTFLOW    STORAGE
    (HOURS) (CFS)    (CFS)    (ACRE-FT)  0.      4.      8.     12.     16.
       0.12     0.00     0.00       0.000 O       .       .       .       .
         [BASIN DEPTH(FEET) =    0.00]
       0.23     0.50     0.00       0.005 OI      .       .       .       .
         [BASIN DEPTH(FEET) =    0.03]
       0.35     0.50     0.00       0.010 OI      .       .       .       .
         [BASIN DEPTH(FEET) =    0.07]
       0.47     0.50     0.01       0.014 OI      .       .       .       .
         [BASIN DEPTH(FEET) =    0.10]
       0.58     0.50     0.01       0.019 OI      .       .       .       .
         [BASIN DEPTH(FEET) =    0.13]
       0.70     0.50     0.01       0.024 OI      .       .       .       .
         [BASIN DEPTH(FEET) =    0.16]
       0.82     0.50     0.01       0.029 OI      .       .       .       .
         [BASIN DEPTH(FEET) =    0.19]
       0.93     0.50     0.01       0.033 OI      .       .       .       .
         [BASIN DEPTH(FEET) =    0.23]
       1.05     0.50     0.01       0.038 OI      .       .       .       .
         [BASIN DEPTH(FEET) =    0.26]
       1.17     0.60     0.02       0.044 OI      .       .       .       .
         [BASIN DEPTH(FEET) =    0.30]
       1.28     0.60     0.02       0.049 OI      .       .       .       .
         [BASIN DEPTH(FEET) =    0.33]
       1.40     0.60     0.02       0.055 OI      .       .       .       .
         [BASIN DEPTH(FEET) =    0.37]
       1.52     0.60     0.02       0.060 OI      .       .       .       .
         [BASIN DEPTH(FEET) =    0.41]
       1.63     0.60     0.03       0.066 OI      .       .       .       .
         [BASIN DEPTH(FEET) =    0.45]
       1.75     0.60     0.03       0.071 OI      .       .       .       .
         [BASIN DEPTH(FEET) =    0.49]
       1.87     0.70     0.03       0.078 OI      .       .       .       .
         [BASIN DEPTH(FEET) =    0.53]
       1.98     0.70     0.03       0.084 OI      .       .       .       .
```

```
  [BASIN DEPTH(FEET) =    0.57]
2.10     0.70     0.04       0.091 OI      .       .       .       .
  [BASIN DEPTH(FEET) =    0.62]
2.22     0.70     0.04       0.097 OI      .       .       .       .
  [BASIN DEPTH(FEET) =    0.66]
2.33     0.80     0.04       0.105 OI      .       .       .       .
  [BASIN DEPTH(FEET) =    0.71]
2.45     0.80     0.04       0.112 OI      .       .       .       .
  [BASIN DEPTH(FEET) =    0.76]
2.57     0.80     0.05       0.119 OI      .       .       .       .
  [BASIN DEPTH(FEET) =    0.81]
2.68     0.90     0.05       0.127 OI      .       .       .       .
  [BASIN DEPTH(FEET) =    0.87]
2.80     0.90     0.05       0.136 OI      .       .       .       .
  [BASIN DEPTH(FEET) =    0.92]
2.92     1.00     0.06       0.145 O I     .       .       .       .
  [BASIN DEPTH(FEET) =    0.98]
3.03     1.00     0.07       0.154 O I     .       .       .       .
  [BASIN DEPTH(FEET) =    1.04]
3.15     1.10     0.08       0.164 O I     .       .       .       .
  [BASIN DEPTH(FEET) =    1.10]
3.27     1.20     0.10       0.174 O I     .       .       .       .
  [BASIN DEPTH(FEET) =    1.17]
3.38     1.30     0.12       0.186 O I     .       .       .       .
  [BASIN DEPTH(FEET) =    1.24]
3.50     1.50     0.14       0.199 O  I    .       .       .       .
  [BASIN DEPTH(FEET) =    1.32]
3.62     1.60     0.16       0.213 O  I    .       .       .       .
  [BASIN DEPTH(FEET) =    1.40]
3.73     1.90     0.18       0.230 O  I    .       .       .       .
  [BASIN DEPTH(FEET) =    1.50]
3.85     2.20     0.21       0.249 O   I   .       .       .       .
  [BASIN DEPTH(FEET) =    1.62]
3.97     3.20     0.25       0.278 O     I .       .       .       .
  [BASIN DEPTH(FEET) =    1.79]
4.08     5.40     0.40       0.327 O       .  I    .       .       .
  [BASIN DEPTH(FEET) =    2.08]
4.20    15.60     1.35       0.469 . O     .       .       .      I.
  [BASIN DEPTH(FEET) =    2.86]
4.32     2.60     1.42       0.480 . O  I  .       .       .       .
  [BASIN DEPTH(FEET) =    2.92]
4.43     1.70     1.44       0.483 . OI    .       .       .       .
  [BASIN DEPTH(FEET) =    2.94]
4.55     1.40     1.44       0.483 . O     .       .       .       .
  [BASIN DEPTH(FEET) =    2.94]
4.67     1.10     1.42       0.479 . O     .       .       .       .
  [BASIN DEPTH(FEET) =    2.92]
4.78     1.00     1.39       0.475 . O     .       .       .       .
  [BASIN DEPTH(FEET) =    2.90]
4.90     0.90     1.36       0.471 .IO     .       .       .       .
  [BASIN DEPTH(FEET) =    2.87]
5.02     0.80     1.33       0.466 .IO     .       .       .       .
  [BASIN DEPTH(FEET) =    2.84]
5.13     0.70     1.29       0.460 .IO     .       .       .       .
  [BASIN DEPTH(FEET) =    2.81]
5.25     0.70     1.25       0.454 .IO     .       .       .       .
  [BASIN DEPTH(FEET) =    2.78]
5.37     0.60     1.21       0.448 .IO     .       .       .       .
  [BASIN DEPTH(FEET) =    2.75]
5.48     0.60     1.17       0.442 .IO     .       .       .       .
  [BASIN DEPTH(FEET) =    2.72]
5.60     0.60     1.14       0.437 .IO     .       .       .       .
  [BASIN DEPTH(FEET) =    2.69]
```

```
5.72     0.50     1.10       0.431 .IO     .       .       .       .
  [BASIN DEPTH(FEET) =    2.65]
5.83     0.50     1.06       0.426 .IO     .       .       .       .
  [BASIN DEPTH(FEET) =    2.62]
5.95     0.50     1.03       0.420 .IO     .       .       .       .
  [BASIN DEPTH(FEET) =    2.60]
6.07     0.50     0.99       0.415 .IO     .       .       .       .
  [BASIN DEPTH(FEET) =    2.57]
6.18     0.00     0.93       0.406 IO      .       .       .       .
  [BASIN DEPTH(FEET) =    2.52]
6.30     0.00     0.87       0.397 IO      .       .       .       .
  [BASIN DEPTH(FEET) =    2.47]
6.42     0.00     0.82       0.389 IO      .       .       .       .
  [BASIN DEPTH(FEET) =    2.42]
6.53     0.00     0.77       0.382 IO      .       .       .       .
  [BASIN DEPTH(FEET) =    2.38]
6.65     0.00     0.72       0.374 IO      .       .       .       .
  [BASIN DEPTH(FEET) =    2.34]
6.77     0.00     0.68       0.368 IO      .       .       .       .
  [BASIN DEPTH(FEET) =    2.31]
6.88     0.00     0.63       0.361 IO      .       .       .       .
  [BASIN DEPTH(FEET) =    2.27]
7.00     0.00     0.59       0.356 IO      .       .       .       .
  [BASIN DEPTH(FEET) =    2.24]
7.12     0.00     0.56       0.350 IO      .       .       .       .
  [BASIN DEPTH(FEET) =    2.21]
7.23     0.00     0.52       0.345 IO      .       .       .       .
  [BASIN DEPTH(FEET) =    2.18]
7.35     0.00     0.49       0.340 IO      .       .       .       .
  [BASIN DEPTH(FEET) =    2.15]
7.47     0.00     0.46       0.335 O       .       .       .       .
  [BASIN DEPTH(FEET) =    2.13]
7.58     0.00     0.43       0.331 O       .       .       .       .
  [BASIN DEPTH(FEET) =    2.10]
7.70     0.00     0.40       0.327 O       .       .       .       .
  [BASIN DEPTH(FEET) =    2.08]
7.82     0.00     0.38       0.323 O       .       .       .       .
  [BASIN DEPTH(FEET) =    2.06]
7.93     0.00     0.36       0.320 O       .       .       .       .
  [BASIN DEPTH(FEET) =    2.04]
8.05     0.00     0.33       0.316 O       .       .       .       .
  [BASIN DEPTH(FEET) =    2.02]
8.17     0.00     0.31       0.313 O       .       .       .       .
  [BASIN DEPTH(FEET) =    2.01]
8.28     0.00     0.30       0.310 O       .       .       .       .
  [BASIN DEPTH(FEET) =    1.99]
8.40     0.00     0.30       0.307 O       .       .       .       .
  [BASIN DEPTH(FEET) =    1.97]
8.52     0.00     0.29       0.304 O       .       .       .       .
  [BASIN DEPTH(FEET) =    1.95]
8.63     0.00     0.29       0.302 O       .       .       .       .
  [BASIN DEPTH(FEET) =    1.94]
8.75     0.00     0.29       0.299 O       .       .       .       .
  [BASIN DEPTH(FEET) =    1.92]
8.87     0.00     0.28       0.296 O       .       .       .       .
  [BASIN DEPTH(FEET) =    1.90]
8.98     0.00     0.28       0.293 O       .       .       .       .
  [BASIN DEPTH(FEET) =    1.89]
9.10     0.00     0.27       0.291 O       .       .       .       .
  [BASIN DEPTH(FEET) =    1.87]
9.22     0.00     0.27       0.288 O       .       .       .       .
  [BASIN DEPTH(FEET) =    1.86]
9.33     0.00     0.27       0.286 O       .       .       .       .
```

```
   [BASIN DEPTH(FEET) =    1.84]
 9.45     0.00     0.26       0.283 O       .       .       .       .
   [BASIN DEPTH(FEET) =    1.82]
 9.57     0.00     0.26       0.281 O       .       .       .       .
   [BASIN DEPTH(FEET) =    1.81]
 9.68     0.00     0.25       0.278 O       .       .       .       .
   [BASIN DEPTH(FEET) =    1.79]
 9.80     0.00     0.25       0.276 O       .       .       .       .
   [BASIN DEPTH(FEET) =    1.78]
 9.92     0.00     0.25       0.273 O       .       .       .       .
   [BASIN DEPTH(FEET) =    1.77]
10.03     0.00     0.24       0.271 O       .       .       .       .
   [BASIN DEPTH(FEET) =    1.75]
10.15     0.00     0.24       0.269 O       .       .       .       .
   [BASIN DEPTH(FEET) =    1.74]
10.27     0.00     0.24       0.266 O       .       .       .       .
   [BASIN DEPTH(FEET) =    1.72]
10.38     0.00     0.23       0.264 O       .       .       .       .
   [BASIN DEPTH(FEET) =    1.71]
10.50     0.00     0.23       0.262 O       .       .       .       .
   [BASIN DEPTH(FEET) =    1.70]
10.62     0.00     0.23       0.260 O       .       .       .       .
   [BASIN DEPTH(FEET) =    1.68]
10.73     0.00     0.22       0.257 O       .       .       .       .
   [BASIN DEPTH(FEET) =    1.67]
10.85     0.00     0.22       0.255 O       .       .       .       .
   [BASIN DEPTH(FEET) =    1.66]
10.97     0.00     0.22       0.253 O       .       .       .       .
   [BASIN DEPTH(FEET) =    1.64]
11.08     0.00     0.21       0.251 O       .       .       .       .
   [BASIN DEPTH(FEET) =    1.63]
11.20     0.00     0.21       0.249 O       .       .       .       .
   [BASIN DEPTH(FEET) =    1.62]
11.32     0.00     0.21       0.247 O       .       .       .       .
   [BASIN DEPTH(FEET) =    1.61]
11.43     0.00     0.20       0.245 O       .       .       .       .
   [BASIN DEPTH(FEET) =    1.59]
11.55     0.00     0.20       0.243 O       .       .       .       .
   [BASIN DEPTH(FEET) =    1.58]
11.67     0.00     0.20       0.241 O       .       .       .       .
   [BASIN DEPTH(FEET) =    1.57]
```

BASIN 2B
PROPOSED HYDROLOGY

RATIONAL METHOD HYDROGRAPH PROGRAM
COPYRIGHT 1992, 2001 RICK ENGINEERING COMPANY
RUN DATE 10/22/2014

TIME OF CONCENTRATION 6 MIN.
6 HOUR RAINFALL 3.2 INCHES
BASIN AREA 5.8 ACRES
RUNOFF COEFFICIENT 0.71
PEAK DISCHARGE 27.6 CFS

62 INTERVALS
TIME (MIN) = 0 DISCHARGE (CFS) = 0
TIME (MIN) = 6 DISCHARGE (CFS) = 0.8
TIME (MIN) = 12 DISCHARGE (CFS) = 0.8
TIME (MIN) = 18 DISCHARGE (CFS) = 0.8
TIME (MIN) = 24 DISCHARGE (CFS) = 0.8
TIME (MIN) = 30 DISCHARGE (CFS) = 0.8
TIME (MIN) = 36 DISCHARGE (CFS) = 0.9
TIME (MIN) = 42 DISCHARGE (CFS) = 0.9
TIME (MIN) = 48 DISCHARGE (CFS) = 0.9
TIME (MIN) = 54 DISCHARGE (CFS) = 0.9
TIME (MIN) = 60 DISCHARGE (CFS) = 0.9
TIME (MIN) = 66 DISCHARGE (CFS) = 0.9
TIME (MIN) = 72 DISCHARGE (CFS) = 1
TIME (MIN) = 78 DISCHARGE (CFS) = 1
TIME (MIN) = 84 DISCHARGE (CFS) = 1
TIME (MIN) = 90 DISCHARGE (CFS) = 1
TIME (MIN) = 96 DISCHARGE (CFS) = 1.1
TIME (MIN) = 102 DISCHARGE (CFS) = 1.1
TIME (MIN) = 108 DISCHARGE (CFS) = 1.1
TIME (MIN) = 114 DISCHARGE (CFS) = 1.2
TIME (MIN) = 120 DISCHARGE (CFS) = 1.2
TIME (MIN) = 126 DISCHARGE (CFS) = 1.2
TIME (MIN) = 132 DISCHARGE (CFS) = 1.3
TIME (MIN) = 138 DISCHARGE (CFS) = 1.3
TIME (MIN) = 144 DISCHARGE (CFS) = 1.4
TIME (MIN) = 150 DISCHARGE (CFS) = 1.4
TIME (MIN) = 156 DISCHARGE (CFS) = 1.5
TIME (MIN) = 162 DISCHARGE (CFS) = 1.6
TIME (MIN) = 168 DISCHARGE (CFS) = 1.6
TIME (MIN) = 174 DISCHARGE (CFS) = 1.7
TIME (MIN) = 180 DISCHARGE (CFS) = 1.8
TIME (MIN) = 186 DISCHARGE (CFS) = 2

TIME (MIN) = 192 DISCHARGE (CFS) = 2
TIME (MIN) = 198 DISCHARGE (CFS) = 2.3
TIME (MIN) = 204 DISCHARGE (CFS) = 2.4
TIME (MIN) = 210 DISCHARGE (CFS) = 2.8
TIME (MIN) = 216 DISCHARGE (CFS) = 3
TIME (MIN) = 222 DISCHARGE (CFS) = 3.7
TIME (MIN) = 228 DISCHARGE (CFS) = 4.2
TIME (MIN) = 234 DISCHARGE (CFS) = 6.1
TIME (MIN) = 240 DISCHARGE (CFS) = 11.9
TIME (MIN) = 246 DISCHARGE (CFS) = 27.6
TIME (MIN) = 252 DISCHARGE (CFS) = 4.9
TIME (MIN) = 258 DISCHARGE (CFS) = 3.3
TIME (MIN) = 264 DISCHARGE (CFS) = 2.6
TIME (MIN) = 270 DISCHARGE (CFS) = 2.1
TIME (MIN) = 276 DISCHARGE (CFS) = 1.9
TIME (MIN) = 282 DISCHARGE (CFS) = 1.7
TIME (MIN) = 288 DISCHARGE (CFS) = 1.5
TIME (MIN) = 294 DISCHARGE (CFS) = 1.4
TIME (MIN) = 300 DISCHARGE (CFS) = 1.3
TIME (MIN) = 306 DISCHARGE (CFS) = 1.2
TIME (MIN) = 312 DISCHARGE (CFS) = 1.1
TIME (MIN) = 318 DISCHARGE (CFS) = 1.1
TIME (MIN) = 324 DISCHARGE (CFS) = 1
TIME (MIN) = 330 DISCHARGE (CFS) = 1
TIME (MIN) = 336 DISCHARGE (CFS) = 0.9
TIME (MIN) = 342 DISCHARGE (CFS) = 0.9
TIME (MIN) = 348 DISCHARGE (CFS) = 0.9
TIME (MIN) = 354 DISCHARGE (CFS) = 0.8
TIME (MIN) = 360 DISCHARGE (CFS) = 0.8
TIME (MIN) = 366 DISCHARGE (CFS) = 0

```
****************************************************************************
                  HYDRAULICS ELEMENTS - II  PROGRAM PACKAGE

                   STORAGE BASIN HYDROGRAPH ROUTING MODEL
****************************************************************************
         (c) Copyright 1983-2012 Advanced Engineering Software (aes)
             Ver. 19.0  Release Date: 06/01/2012  License ID 1355

                             Analysis prepared by:

                               Fuscoe Engineering
                               6390 Greenwich Dr.
                                   Suite 170
                              San Diego, CA 92122

 ************************** DESCRIPTION OF STUDY **************************
* PROPOSED HYDROLOGY                                                       *
* DETENTION BASIN 2B AT NODE 295                                           *
* OCTOBER 2014                                                             *
 ***************************************************************************

    FILE NAME: BASIN2B.DAT
    TIME/DATE OF STUDY: 14:16 10/22/2014
===============================================================================
    ENTERED INFORMATION:
-------------------------------------------------------------------------------
    TOTAL NUMBER OF INFLOW HYDROGRAPH INTERVALS =   62
    CONSTANT HYDROGRAPH TIME UNIT(MINUTES) =    6.000
    ASSUMED INITIAL DEPTH(FEET) IN STORAGE BASIN =    0.00
-------------------------------------------------------------------------------
    ENTERED INFLOW HYDROGRAPH ORDINATES(CFS):
    *INTERVAL    FLOW   *INTERVAL    FLOW   *INTERVAL    FLOW   *
    * NUMBER     (CFS)  * NUMBER     (CFS)  * NUMBER     (CFS)  *
    *    1:         0.00*    2:         0.80*    3:         0.80*
    *    4:         0.80*    5:         0.80*    6:         0.80*
    *    7:         0.90*    8:         0.90*    9:         0.90*
    *   10:         0.90*   11:         0.90*   12:         0.90*
    *   13:         1.00*   14:         1.00*   15:         1.00*
    *   16:         1.00*   17:         1.10*   18:         1.10*
    *   19:         1.10*   20:         1.20*   21:         1.20*
    *   22:         1.20*   23:         1.30*   24:         1.30*
    *   25:         1.40*   26:         1.40*   27:         1.50*
    *   28:         1.60*   29:         1.60*   30:         1.70*
    *   31:         1.80*   32:         2.00*   33:         2.00*
    *   34:         2.30*   35:         2.40*   36:         2.80*
    *   37:         3.00*   38:         3.70*   39:         4.20*
    *   40:         6.10*   41:        11.90*   42:        27.60*
    *   43:         4.90*   44:         3.30*   45:         2.60*
    *   46:         2.10*   47:         1.90*   48:         1.70*
    *   49:         1.50*   50:         1.40*   51:         1.30*
    *   52:         1.20*   53:         1.10*   54:         1.10*
    *   55:         1.00*   56:         1.00*   57:         0.90*
    *   58:         0.90*   59:         0.90*   60:         0.80*
    *   61:         0.80*   62:         0.00*
===============================================================================
    DEPTH-VS.-STORAGE AND DEPTH-VS.-DISCHARGE INFORMATION:
-------------------------------------------------------------------------------
    TOTAL NUMBER OF BASIN DEPTH INFORMATION ENTRIES =   6
-------------------------------------------------------------------------------
    *BASIN-DEPTH  STORAGE    OUTFLOW  **BASIN-DEPTH  STORAGE    OUTFLOW  *
    *   (FEET)  (ACRE-FEET)   (CFS)   **   (FEET)  (ACRE-FEET)   (CFS)   *
    *      0.000      0.000      0.000**      1.000      0.139      0.100*
```

```
    *      2.000      0.297      0.145**      3.000      0.477      1.703*
    *      4.000      0.677      8.888**      5.000      0.899     12.060*
*****************************************************************************
-----------------------------------------------------------------------------
    INITIAL BASIN DEPTH(FEET) =    0.00
    INITIAL BASIN STORAGE(ACRE-FEET) =       0.00
    INITIAL BASIN OUTFLOW(CFS) =       0.00
-----------------------------------------------------------------------------
-----------------------------------------------------------------------------
    BASIN STORAGE, OUTFLOW AND DEPTH ROUTING VALUES:
     INTERVAL   {S-O*DT/2}   {S+O*DT/2}
      NUMBER   (ACRE-FEET) (ACRE-FEET)
          1      0.00000     0.00000
          2      0.13859     0.13941
          3      0.29640     0.29760
          4      0.46996     0.48404
          5      0.64027     0.71373
          6      0.84917     0.94883
    WHERE S=STORAGE(AF);O=OUTFLOW(AF/MIN.);DT=UNIT(MIN.)
-----------------------------------------------------------------------------



         *UNIT-HYDROGRAPH STORAGE-BASIN ROUTING*
    NOTE: COMPUTED BASIN DEPTH, OUTFLOW, AND STORAGE QUANTITIES
          OCCUR AT THE GIVEN TIME. BASIN INFLOW VALUES REPRESENT THE
          AVERAGE INFLOW DURING THE RECENT HYDROGRAPH UNIT INTERVAL.

    GRAPH NOTATION: "I"=MEAN UNIT INFLOW; "O"=OUTFLOW AT GIVEN TIME
-----------------------------------------------------------------------------
     TIME   INFLOW  OUTFLOW    STORAGE
    (HOURS) (CFS)    (CFS)    (ACRE-FT)  0.      7.     14.     21.     28.
       0.10     0.00     0.00       0.000 O       .       .       .       .
         [BASIN DEPTH(FEET) =    0.00]
       0.20     0.80     0.00       0.007 O       .       .       .       .
         [BASIN DEPTH(FEET) =    0.05]
       0.30     0.80     0.01       0.013 O       .       .       .       .
         [BASIN DEPTH(FEET) =    0.09]
       0.40     0.80     0.01       0.020 O       .       .       .       .
         [BASIN DEPTH(FEET) =    0.14]
       0.50     0.80     0.02       0.026 O       .       .       .       .
         [BASIN DEPTH(FEET) =    0.19]
       0.60     0.80     0.02       0.033 O       .       .       .       .
         [BASIN DEPTH(FEET) =    0.23]
       0.70     0.90     0.03       0.040 OI      .       .       .       .
         [BASIN DEPTH(FEET) =    0.29]
       0.80     0.90     0.03       0.047 OI      .       .       .       .
         [BASIN DEPTH(FEET) =    0.34]
       0.90     0.90     0.04       0.054 OI      .       .       .       .
         [BASIN DEPTH(FEET) =    0.39]
       1.00     0.90     0.04       0.061 OI      .       .       .       .
         [BASIN DEPTH(FEET) =    0.44]
       1.10     0.90     0.05       0.068 OI      .       .       .       .
         [BASIN DEPTH(FEET) =    0.49]
       1.20     0.90     0.05       0.075 OI      .       .       .       .
         [BASIN DEPTH(FEET) =    0.54]
       1.30     1.00     0.06       0.083 OI      .       .       .       .
         [BASIN DEPTH(FEET) =    0.60]
       1.40     1.00     0.07       0.091 OI      .       .       .       .
         [BASIN DEPTH(FEET) =    0.65]
       1.50     1.00     0.07       0.099 OI      .       .       .       .
```

```
  [BASIN DEPTH(FEET) =    0.71]
1.60     1.00     0.08       0.106 OI      .       .       .       .
  [BASIN DEPTH(FEET) =    0.76]
1.70     1.10     0.08       0.115 OI      .       .       .       .
  [BASIN DEPTH(FEET) =    0.82]
1.80     1.10     0.09       0.123 OI      .       .       .       .
  [BASIN DEPTH(FEET) =    0.88]
1.90     1.10     0.09       0.131 OI      .       .       .       .
  [BASIN DEPTH(FEET) =    0.94]
2.00     1.20     0.10       0.140 OI      .       .       .       .
  [BASIN DEPTH(FEET) =    1.01]
2.10     1.20     0.10       0.150 OI      .       .       .       .
  [BASIN DEPTH(FEET) =    1.07]
2.20     1.20     0.11       0.159 OI      .       .       .       .
  [BASIN DEPTH(FEET) =    1.12]
2.30     1.30     0.11       0.168 OI      .       .       .       .
  [BASIN DEPTH(FEET) =    1.19]
2.40     1.30     0.11       0.178 OI      .       .       .       .
  [BASIN DEPTH(FEET) =    1.25]
2.50     1.40     0.11       0.189 OI      .       .       .       .
  [BASIN DEPTH(FEET) =    1.32]
2.60     1.40     0.12       0.200 OI      .       .       .       .
  [BASIN DEPTH(FEET) =    1.38]
2.70     1.50     0.12       0.211 OI      .       .       .       .
  [BASIN DEPTH(FEET) =    1.46]
2.80     1.60     0.12       0.223 OI      .       .       .       .
  [BASIN DEPTH(FEET) =    1.53]
2.90     1.60     0.13       0.235 OI      .       .       .       .
  [BASIN DEPTH(FEET) =    1.61]
3.00     1.70     0.13       0.248 OI      .       .       .       .
  [BASIN DEPTH(FEET) =    1.69]
3.10     1.80     0.14       0.262 O I     .       .       .       .
  [BASIN DEPTH(FEET) =    1.78]
3.20     2.00     0.14       0.277 O I     .       .       .       .
  [BASIN DEPTH(FEET) =    1.88]
3.30     2.00     0.14       0.293 O I     .       .       .       .
  [BASIN DEPTH(FEET) =    1.97]
3.40     2.30     0.26       0.310 O I     .       .       .       .
  [BASIN DEPTH(FEET) =    2.07]
3.50     2.40     0.41       0.327 O I     .       .       .       .
  [BASIN DEPTH(FEET) =    2.17]
3.60     2.80     0.57       0.346 O  I    .       .       .       .
  [BASIN DEPTH(FEET) =    2.27]
3.70     3.00     0.74       0.366 O  I    .       .       .       .
  [BASIN DEPTH(FEET) =    2.38]
3.80     3.70     0.94       0.389 .O  I   .       .       .       .
  [BASIN DEPTH(FEET) =    2.51]
3.90     4.20     1.17       0.415 .O  I   .       .       .       .
  [BASIN DEPTH(FEET) =    2.66]
4.00     6.10     1.51       0.455 .O     I.       .       .       .
  [BASIN DEPTH(FEET) =    2.88]
4.10    11.90     3.67       0.532 .   O   .    I  .       .       .
  [BASIN DEPTH(FEET) =    3.27]
4.20    27.60     9.30       0.706 .       . O     .       .       I
  [BASIN DEPTH(FEET) =    4.13]
4.30     4.90     8.71       0.672 .    I  . O     .       .       .
  [BASIN DEPTH(FEET) =    3.98]
4.40     3.30     7.31       0.633 .  I    O       .       .       .
  [BASIN DEPTH(FEET) =    3.78]
4.50     2.60     6.10       0.599 .  I   O.       .       .       .
  [BASIN DEPTH(FEET) =    3.61]
4.60     2.10     5.06       0.571 . I  O  .       .       .       .
  [BASIN DEPTH(FEET) =    3.47]
```

```
4.70     1.90     4.25       0.548 . I O   .       .       .       .
  [BASIN DEPTH(FEET) =    3.35]
4.80     1.70     3.59       0.529 .I  O   .       .       .       .
  [BASIN DEPTH(FEET) =    3.26]
4.90     1.50     3.05       0.514 .I O    .       .       .       .
  [BASIN DEPTH(FEET) =    3.19]
5.00     1.40     2.62       0.503 .I O    .       .       .       .
  [BASIN DEPTH(FEET) =    3.13]
5.10     1.30     2.28       0.493 .IO     .       .       .       .
  [BASIN DEPTH(FEET) =    3.08]
5.20     1.20     2.00       0.485 .IO     .       .       .       .
  [BASIN DEPTH(FEET) =    3.04]
5.30     1.10     1.77       0.479 .IO     .       .       .       .
  [BASIN DEPTH(FEET) =    3.01]
5.40     1.10     1.67       0.474 .O      .       .       .       .
  [BASIN DEPTH(FEET) =    2.98]
5.50     1.00     1.63       0.468 .O      .       .       .       .
  [BASIN DEPTH(FEET) =    2.95]
5.60     1.00     1.58       0.463 .O      .       .       .       .
  [BASIN DEPTH(FEET) =    2.92]
5.70     0.90     1.54       0.458 .O      .       .       .       .
  [BASIN DEPTH(FEET) =    2.89]
5.80     0.90     1.49       0.453 .O      .       .       .       .
  [BASIN DEPTH(FEET) =    2.87]
5.90     0.90     1.45       0.448 .O      .       .       .       .
  [BASIN DEPTH(FEET) =    2.84]
6.00     0.80     1.41       0.443 IO      .       .       .       .
  [BASIN DEPTH(FEET) =    2.81]
6.10     0.80     1.37       0.438 IO      .       .       .       .
  [BASIN DEPTH(FEET) =    2.78]
6.20     0.00     1.27       0.427 IO      .       .       .       .
  [BASIN DEPTH(FEET) =    2.72]
6.30     0.00     1.18       0.417 IO      .       .       .       .
  [BASIN DEPTH(FEET) =    2.67]
6.40     0.00     1.10       0.407 IO      .       .       .       .
  [BASIN DEPTH(FEET) =    2.61]
6.50     0.00     1.03       0.399 IO      .       .       .       .
  [BASIN DEPTH(FEET) =    2.57]
6.60     0.00     0.95       0.391 IO      .       .       .       .
  [BASIN DEPTH(FEET) =    2.52]
6.70     0.00     0.89       0.383 IO      .       .       .       .
  [BASIN DEPTH(FEET) =    2.48]
6.80     0.00     0.83       0.376 O       .       .       .       .
  [BASIN DEPTH(FEET) =    2.44]
6.90     0.00     0.77       0.369 O       .       .       .       .
  [BASIN DEPTH(FEET) =    2.40]
7.00     0.00     0.72       0.363 O       .       .       .       .
  [BASIN DEPTH(FEET) =    2.37]
7.10     0.00     0.67       0.357 O       .       .       .       .
  [BASIN DEPTH(FEET) =    2.34]
7.20     0.00     0.62       0.352 O       .       .       .       .
  [BASIN DEPTH(FEET) =    2.31]
7.30     0.00     0.58       0.347 O       .       .       .       .
  [BASIN DEPTH(FEET) =    2.28]
7.40     0.00     0.54       0.342 O       .       .       .       .
  [BASIN DEPTH(FEET) =    2.25]
7.50     0.00     0.50       0.338 O       .       .       .       .
  [BASIN DEPTH(FEET) =    2.23]
7.60     0.00     0.47       0.334 O       .       .       .       .
  [BASIN DEPTH(FEET) =    2.21]
7.70     0.00     0.43       0.330 O       .       .       .       .
  [BASIN DEPTH(FEET) =    2.19]
7.80     0.00     0.40       0.327 O       .       .       .       .
```

```
   [BASIN DEPTH(FEET) =    2.17]
 7.90     0.00     0.38       0.324 O       .       .       .       .
   [BASIN DEPTH(FEET) =    2.15]
 8.00     0.00     0.35       0.321 O       .       .       .       .
   [BASIN DEPTH(FEET) =    2.13]
 8.10     0.00     0.33       0.318 O       .       .       .       .
   [BASIN DEPTH(FEET) =    2.12]
 8.20     0.00     0.30       0.315 O       .       .       .       .
   [BASIN DEPTH(FEET) =    2.10]
 8.30     0.00     0.28       0.313 O       .       .       .       .
   [BASIN DEPTH(FEET) =    2.09]
 8.40     0.00     0.26       0.311 O       .       .       .       .
   [BASIN DEPTH(FEET) =    2.08]
 8.50     0.00     0.25       0.309 O       .       .       .       .
   [BASIN DEPTH(FEET) =    2.06]
 8.60     0.00     0.23       0.307 O       .       .       .       .
   [BASIN DEPTH(FEET) =    2.05]
 8.70     0.00     0.21       0.305 O       .       .       .       .
   [BASIN DEPTH(FEET) =    2.04]
 8.80     0.00     0.20       0.303 O       .       .       .       .
   [BASIN DEPTH(FEET) =    2.03]
 8.90     0.00     0.18       0.302 O       .       .       .       .
   [BASIN DEPTH(FEET) =    2.03]
 9.00     0.00     0.17       0.300 O       .       .       .       .
   [BASIN DEPTH(FEET) =    2.02]
 9.10     0.00     0.16       0.299 O       .       .       .       .
   [BASIN DEPTH(FEET) =    2.01]
 9.20     0.00     0.15       0.297 O       .       .       .       .
   [BASIN DEPTH(FEET) =    2.00]
 9.30     0.00     0.14       0.296 O       .       .       .       .
   [BASIN DEPTH(FEET) =    1.99]
 9.40     0.00     0.14       0.295 O       .       .       .       .
   [BASIN DEPTH(FEET) =    1.99]
 9.50     0.00     0.14       0.294 O       .       .       .       .
   [BASIN DEPTH(FEET) =    1.98]
 9.60     0.00     0.14       0.293 O       .       .       .       .
   [BASIN DEPTH(FEET) =    1.97]
 9.70     0.00     0.14       0.291 O       .       .       .       .
   [BASIN DEPTH(FEET) =    1.96]
 9.80     0.00     0.14       0.290 O       .       .       .       .
   [BASIN DEPTH(FEET) =    1.96]
 9.90     0.00     0.14       0.289 O       .       .       .       .
   [BASIN DEPTH(FEET) =    1.95]
10.00     0.00     0.14       0.288 O       .       .       .       .
   [BASIN DEPTH(FEET) =    1.94]
```

BASIN 2C
PROPOSED HYDROLOGY

RATIONAL METHOD HYDROGRAPH PROGRAM
COPYRIGHT 1992, 2001 RICK ENGINEERING COMPANY
RUN DATE 10/22/2014

TIME OF CONCENTRATION 7 MIN.
6 HOUR RAINFALL 3.2 INCHES
BASIN AREA 12 ACRES
RUNOFF COEFFICIENT 0.71
PEAK DISCHARGE 55.15 CFS

53 INTERVALS
TIME (MIN) = 0 DISCHARGE (CFS) = 0
TIME (MIN) = 7 DISCHARGE (CFS) = 1.6
TIME (MIN) = 14 DISCHARGE (CFS) = 1.7
TIME (MIN) = 21 DISCHARGE (CFS) = 1.7
TIME (MIN) = 28 DISCHARGE (CFS) = 1.7
TIME (MIN) = 35 DISCHARGE (CFS) = 1.8
TIME (MIN) = 42 DISCHARGE (CFS) = 1.8
TIME (MIN) = 49 DISCHARGE (CFS) = 1.9
TIME (MIN) = 56 DISCHARGE (CFS) = 1.9
TIME (MIN) = 63 DISCHARGE (CFS) = 1.9
TIME (MIN) = 70 DISCHARGE (CFS) = 2
TIME (MIN) = 77 DISCHARGE (CFS) = 2.1
TIME (MIN) = 84 DISCHARGE (CFS) = 2.1
TIME (MIN) = 91 DISCHARGE (CFS) = 2.2
TIME (MIN) = 98 DISCHARGE (CFS) = 2.2
TIME (MIN) = 105 DISCHARGE (CFS) = 2.3
TIME (MIN) = 112 DISCHARGE (CFS) = 2.4
TIME (MIN) = 119 DISCHARGE (CFS) = 2.5
TIME (MIN) = 126 DISCHARGE (CFS) = 2.5
TIME (MIN) = 133 DISCHARGE (CFS) = 2.7
TIME (MIN) = 140 DISCHARGE (CFS) = 2.8
TIME (MIN) = 147 DISCHARGE (CFS) = 2.9
TIME (MIN) = 154 DISCHARGE (CFS) = 3
TIME (MIN) = 161 DISCHARGE (CFS) = 3.2
TIME (MIN) = 168 DISCHARGE (CFS) = 3.4
TIME (MIN) = 175 DISCHARGE (CFS) = 3.7
TIME (MIN) = 182 DISCHARGE (CFS) = 3.8
TIME (MIN) = 189 DISCHARGE (CFS) = 4.2
TIME (MIN) = 196 DISCHARGE (CFS) = 4.5
TIME (MIN) = 203 DISCHARGE (CFS) = 5.2
TIME (MIN) = 210 DISCHARGE (CFS) = 5.6
TIME (MIN) = 217 DISCHARGE (CFS) = 6.8

TIME (MIN) = 224 DISCHARGE (CFS) = 7.8
TIME (MIN) = 231 DISCHARGE (CFS) = 11.4
TIME (MIN) = 238 DISCHARGE (CFS) = 18.8
TIME (MIN) = 245 DISCHARGE (CFS) = 55.15
TIME (MIN) = 252 DISCHARGE (CFS) = 9.2
TIME (MIN) = 259 DISCHARGE (CFS) = 6.1
TIME (MIN) = 266 DISCHARGE (CFS) = 4.8
TIME (MIN) = 273 DISCHARGE (CFS) = 4
TIME (MIN) = 280 DISCHARGE (CFS) = 3.5
TIME (MIN) = 287 DISCHARGE (CFS) = 3.1
TIME (MIN) = 294 DISCHARGE (CFS) = 2.8
TIME (MIN) = 301 DISCHARGE (CFS) = 2.6
TIME (MIN) = 308 DISCHARGE (CFS) = 2.4
TIME (MIN) = 315 DISCHARGE (CFS) = 2.3
TIME (MIN) = 322 DISCHARGE (CFS) = 2.1
TIME (MIN) = 329 DISCHARGE (CFS) = 2
TIME (MIN) = 336 DISCHARGE (CFS) = 1.9
TIME (MIN) = 343 DISCHARGE (CFS) = 1.8
TIME (MIN) = 350 DISCHARGE (CFS) = 1.7
TIME (MIN) = 357 DISCHARGE (CFS) = 1.7
TIME (MIN) = 364 DISCHARGE (CFS) = 0

```
****************************************************************************
                  HYDRAULICS ELEMENTS - II  PROGRAM PACKAGE

                   STORAGE BASIN HYDROGRAPH ROUTING MODEL
****************************************************************************
         (c) Copyright 1983-2012 Advanced Engineering Software (aes)
             Ver. 19.0  Release Date: 06/01/2012  License ID 1355

                            Analysis prepared by:

                              Fuscoe Engineering
                              6390 Greenwich Dr.
                                  Suite 170
                             San Diego, CA 92122

 ************************** DESCRIPTION OF STUDY **************************
* PROPOSED HYDROLOGY                                                       *
* DETENTION BASIN 2C AT NODE 229                                           *
* OCTOBER 2014                                                             *
 ***************************************************************************

    FILE NAME: BASIN2C.DAT
    TIME/DATE OF STUDY: 14:52 10/22/2014
===============================================================================
    ENTERED INFORMATION:
-------------------------------------------------------------------------------
    TOTAL NUMBER OF INFLOW HYDROGRAPH INTERVALS =   53
    CONSTANT HYDROGRAPH TIME UNIT(MINUTES) =    7.000
    ASSUMED INITIAL DEPTH(FEET) IN STORAGE BASIN =    0.00
-------------------------------------------------------------------------------
    ENTERED INFLOW HYDROGRAPH ORDINATES(CFS):
    *INTERVAL    FLOW   *INTERVAL    FLOW   *INTERVAL    FLOW   *
    * NUMBER     (CFS)  * NUMBER     (CFS)  * NUMBER     (CFS)  *
    *    1:        0.00*    2:        1.60*    3:        1.70*
    *    4:        1.70*    5:        1.70*    6:        1.80*
    *    7:        1.80*    8:        1.90*    9:        1.90*
    *   10:        1.90*   11:        2.00*   12:        2.10*
    *   13:        2.10*   14:        2.20*   15:        2.20*
    *   16:        2.30*   17:        2.40*   18:        2.50*
    *   19:        2.50*   20:        2.70*   21:        2.80*
    *   22:        2.90*   23:        3.00*   24:        3.20*
    *   25:        3.40*   26:        3.70*   27:        3.80*
    *   28:        4.20*   29:        4.50*   30:        5.20*
    *   31:        5.60*   32:        6.80*   33:        7.80*
    *   34:       11.40*   35:       18.80*   36:       55.15*
    *   37:        9.20*   38:        6.10*   39:        4.80*
    *   40:        4.00*   41:        3.50*   42:        3.10*
    *   43:        2.80*   44:        2.60*   45:        2.40*
    *   46:        2.30*   47:        2.10*   48:        2.00*
    *   49:        1.90*   50:        1.80*   51:        1.70*
    *   52:        1.70*   53:        0.00*
===============================================================================
    DEPTH-VS.-STORAGE AND DEPTH-VS.-DISCHARGE INFORMATION:
-------------------------------------------------------------------------------
    TOTAL NUMBER OF BASIN DEPTH INFORMATION ENTRIES =   6
-------------------------------------------------------------------------------
    *BASIN-DEPTH  STORAGE    OUTFLOW  **BASIN-DEPTH  STORAGE    OUTFLOW  *
    *   (FEET)  (ACRE-FEET)   (CFS)   **   (FEET)  (ACRE-FEET)   (CFS)   *
    *      0.000      0.000      0.000**      1.000      0.093      0.220*
    *      2.000      0.388      0.462**      3.000      0.713      3.047*
    *      4.000      1.070     10.840**      5.000      1.459     14.400*
****************************************************************************
```

```
-----------------------------------------------------------------------------
    INITIAL BASIN DEPTH(FEET) =    0.00
    INITIAL BASIN STORAGE(ACRE-FEET) =       0.00
    INITIAL BASIN OUTFLOW(CFS) =       0.00
-----------------------------------------------------------------------------
-----------------------------------------------------------------------------
    BASIN STORAGE, OUTFLOW AND DEPTH ROUTING VALUES:
     INTERVAL   {S-O*DT/2}   {S+O*DT/2}
      NUMBER   (ACRE-FEET) (ACRE-FEET)
          1      0.00000     0.00000
          2      0.09194     0.09406
          3      0.38577     0.39023
          4      0.69831     0.72769
          5      1.01774     1.12226
          6      1.38958     1.52842
    WHERE S=STORAGE(AF);O=OUTFLOW(AF/MIN.);DT=UNIT(MIN.)
-----------------------------------------------------------------------------



         *UNIT-HYDROGRAPH STORAGE-BASIN ROUTING*
    NOTE: COMPUTED BASIN DEPTH, OUTFLOW, AND STORAGE QUANTITIES
          OCCUR AT THE GIVEN TIME. BASIN INFLOW VALUES REPRESENT THE
          AVERAGE INFLOW DURING THE RECENT HYDROGRAPH UNIT INTERVAL.

    GRAPH NOTATION: "I"=MEAN UNIT INFLOW; "O"=OUTFLOW AT GIVEN TIME
-----------------------------------------------------------------------------
     TIME   INFLOW  OUTFLOW    STORAGE
    (HOURS) (CFS)    (CFS)    (ACRE-FT)  0.     14.     28.     41.     55.
       0.12     0.00     0.00       0.000 O       .       .       .       .
         [BASIN DEPTH(FEET) =    0.00]
       0.23     1.60     0.04       0.015 O       .       .       .       .
         [BASIN DEPTH(FEET) =    0.16]
       0.35     1.70     0.07       0.031 O       .       .       .       .
         [BASIN DEPTH(FEET) =    0.33]
       0.47     1.70     0.11       0.047 O       .       .       .       .
         [BASIN DEPTH(FEET) =    0.50]
       0.58     1.70     0.15       0.062 O       .       .       .       .
         [BASIN DEPTH(FEET) =    0.66]
       0.70     1.80     0.18       0.078 OI      .       .       .       .
         [BASIN DEPTH(FEET) =    0.83]
       0.82     1.80     0.22       0.093 OI      .       .       .       .
         [BASIN DEPTH(FEET) =    1.00]
       0.93     1.90     0.23       0.109 OI      .       .       .       .
         [BASIN DEPTH(FEET) =    1.05]
       1.05     1.90     0.25       0.125 OI      .       .       .       .
         [BASIN DEPTH(FEET) =    1.11]
       1.17     1.90     0.26       0.141 OI      .       .       .       .
         [BASIN DEPTH(FEET) =    1.16]
       1.28     2.00     0.27       0.158 OI      .       .       .       .
         [BASIN DEPTH(FEET) =    1.22]
       1.40     2.10     0.29       0.175 OI      .       .       .       .
         [BASIN DEPTH(FEET) =    1.28]
       1.52     2.10     0.30       0.193 OI      .       .       .       .
         [BASIN DEPTH(FEET) =    1.34]
       1.63     2.20     0.32       0.211 OI      .       .       .       .
         [BASIN DEPTH(FEET) =    1.40]
       1.75     2.20     0.33       0.229 OI      .       .       .       .
         [BASIN DEPTH(FEET) =    1.46]
       1.87     2.30     0.35       0.248 OI      .       .       .       .
         [BASIN DEPTH(FEET) =    1.52]
```

```
1.98     2.40     0.36       0.268 OI      .       .       .       .
  [BASIN DEPTH(FEET) =    1.59]
2.10     2.50     0.38       0.288 OI      .       .       .       .
  [BASIN DEPTH(FEET) =    1.66]
2.22     2.50     0.40       0.308 OI      .       .       .       .
  [BASIN DEPTH(FEET) =    1.73]
2.33     2.70     0.41       0.331 OI      .       .       .       .
  [BASIN DEPTH(FEET) =    1.81]
2.45     2.80     0.43       0.353 OI      .       .       .       .
  [BASIN DEPTH(FEET) =    1.88]
2.57     2.90     0.45       0.377 OI      .       .       .       .
  [BASIN DEPTH(FEET) =    1.96]
2.68     3.00     0.57       0.401 OI      .       .       .       .
  [BASIN DEPTH(FEET) =    2.04]
2.80     3.20     0.76       0.426 OI      .       .       .       .
  [BASIN DEPTH(FEET) =    2.12]
2.92     3.40     0.96       0.450 OI      .       .       .       .
  [BASIN DEPTH(FEET) =    2.19]
3.03     3.70     1.16       0.476 O I     .       .       .       .
  [BASIN DEPTH(FEET) =    2.27]
3.15     3.80     1.35       0.500 O I     .       .       .       .
  [BASIN DEPTH(FEET) =    2.35]
3.27     4.20     1.56       0.527 O I     .       .       .       .
  [BASIN DEPTH(FEET) =    2.43]
3.38     4.50     1.78       0.554 .OI     .       .       .       .
  [BASIN DEPTH(FEET) =    2.51]
3.50     5.20     2.03       0.586 .O I    .       .       .       .
  [BASIN DEPTH(FEET) =    2.61]
3.62     5.60     2.30       0.619 .O I    .       .       .       .
  [BASIN DEPTH(FEET) =    2.71]
3.73     6.80     2.63       0.661 .O I    .       .       .       .
  [BASIN DEPTH(FEET) =    2.84]
3.85     7.80     3.01       0.709 .O  I   .       .       .       .
  [BASIN DEPTH(FEET) =    2.99]
3.97    11.40     4.55       0.782 . O   I .       .       .       .
  [BASIN DEPTH(FEET) =    3.19]
4.08    18.80     7.27       0.906 .   O   . I     .       .       .
  [BASIN DEPTH(FEET) =    3.54]
4.20    55.15    13.30       1.339 .      O.       .       .       I
  [BASIN DEPTH(FEET) =    4.69]
4.32     9.20    12.95       1.301 .    I O.       .       .       .
  [BASIN DEPTH(FEET) =    4.59]
4.43     6.10    12.37       1.238 .  I   O.       .       .       .
  [BASIN DEPTH(FEET) =    4.43]
4.55     4.80    11.73       1.168 . I   O .       .       .       .
  [BASIN DEPTH(FEET) =    4.25]
4.67     4.00    11.08       1.096 . I   O .       .       .       .
  [BASIN DEPTH(FEET) =    4.07]
4.78     3.50     9.94       1.029 . I  O  .       .       .       .
  [BASIN DEPTH(FEET) =    3.88]
4.90     3.10     8.64       0.969 .I   O  .       .       .       .
  [BASIN DEPTH(FEET) =    3.72]
5.02     2.80     7.53       0.918 .I  O   .       .       .       .
  [BASIN DEPTH(FEET) =    3.57]
5.13     2.60     6.59       0.875 .I O    .       .       .       .
  [BASIN DEPTH(FEET) =    3.45]
5.25     2.40     5.79       0.839 .I O    .       .       .       .
  [BASIN DEPTH(FEET) =    3.35]
5.37     2.30     5.13       0.808 .IO     .       .       .       .
  [BASIN DEPTH(FEET) =    3.27]
5.48     2.10     4.55       0.782 .IO     .       .       .       .
  [BASIN DEPTH(FEET) =    3.19]
5.60     2.00     4.06       0.760 .IO     .       .       .       .
```

```
  [BASIN DEPTH(FEET) =    3.13]
5.72     1.90     3.65       0.741 .IO     .       .       .       .
  [BASIN DEPTH(FEET) =    3.08]
5.83     1.80     3.30       0.725 .O      .       .       .       .
  [BASIN DEPTH(FEET) =    3.03]
5.95     1.70     3.03       0.710 IO      .       .       .       .
  [BASIN DEPTH(FEET) =    2.99]
6.07     1.70     2.93       0.698 IO      .       .       .       .
  [BASIN DEPTH(FEET) =    2.95]
6.18     0.00     2.71       0.671 IO      .       .       .       .
  [BASIN DEPTH(FEET) =    2.87]
6.30     0.00     2.51       0.646 IO      .       .       .       .
  [BASIN DEPTH(FEET) =    2.79]
6.42     0.00     2.33       0.622 IO      .       .       .       .
  [BASIN DEPTH(FEET) =    2.72]
6.53     0.00     2.15       0.601 IO      .       .       .       .
  [BASIN DEPTH(FEET) =    2.65]
6.65     0.00     2.00       0.581 IO      .       .       .       .
  [BASIN DEPTH(FEET) =    2.59]
6.77     0.00     1.85       0.562 IO      .       .       .       .
  [BASIN DEPTH(FEET) =    2.54]
6.88     0.00     1.71       0.545 O       .       .       .       .
  [BASIN DEPTH(FEET) =    2.48]
7.00     0.00     1.59       0.529 O       .       .       .       .
  [BASIN DEPTH(FEET) =    2.43]
7.12     0.00     1.47       0.514 O       .       .       .       .
  [BASIN DEPTH(FEET) =    2.39]
7.23     0.00     1.36       0.501 O       .       .       .       .
  [BASIN DEPTH(FEET) =    2.35]
7.35     0.00     1.26       0.488 O       .       .       .       .
  [BASIN DEPTH(FEET) =    2.31]
7.47     0.00     1.17       0.477 O       .       .       .       .
  [BASIN DEPTH(FEET) =    2.27]
7.58     0.00     1.08       0.466 O       .       .       .       .
  [BASIN DEPTH(FEET) =    2.24]
7.70     0.00     1.00       0.456 O       .       .       .       .
  [BASIN DEPTH(FEET) =    2.21]
7.82     0.00     0.93       0.446 O       .       .       .       .
  [BASIN DEPTH(FEET) =    2.18]
7.93     0.00     0.86       0.438 O       .       .       .       .
  [BASIN DEPTH(FEET) =    2.15]
8.05     0.00     0.79       0.430 O       .       .       .       .
  [BASIN DEPTH(FEET) =    2.13]
8.17     0.00     0.74       0.422 O       .       .       .       .
  [BASIN DEPTH(FEET) =    2.11]
8.28     0.00     0.68       0.416 O       .       .       .       .
  [BASIN DEPTH(FEET) =    2.08]
8.40     0.00     0.63       0.409 O       .       .       .       .
  [BASIN DEPTH(FEET) =    2.07]
8.52     0.00     0.58       0.403 O       .       .       .       .
  [BASIN DEPTH(FEET) =    2.05]
8.63     0.00     0.54       0.398 O       .       .       .       .
  [BASIN DEPTH(FEET) =    2.03]
8.75     0.00     0.50       0.393 O       .       .       .       .
  [BASIN DEPTH(FEET) =    2.02]
8.87     0.00     0.46       0.388 O       .       .       .       .
  [BASIN DEPTH(FEET) =    2.00]
8.98     0.00     0.46       0.384 O       .       .       .       .
  [BASIN DEPTH(FEET) =    1.99]
9.10     0.00     0.45       0.379 O       .       .       .       .
  [BASIN DEPTH(FEET) =    1.97]
9.22     0.00     0.45       0.375 O       .       .       .       .
  [BASIN DEPTH(FEET) =    1.96]
```

```
 9.33     0.00     0.45       0.371 O       .       .       .       .
   [BASIN DEPTH(FEET) =    1.94]
 9.45     0.00     0.44       0.366 O       .       .       .       .
   [BASIN DEPTH(FEET) =    1.93]
 9.57     0.00     0.44       0.362 O       .       .       .       .
   [BASIN DEPTH(FEET) =    1.91]
 9.68     0.00     0.44       0.358 O       .       .       .       .
   [BASIN DEPTH(FEET) =    1.90]
 9.80     0.00     0.43       0.354 O       .       .       .       .
   [BASIN DEPTH(FEET) =    1.88]
 9.92     0.00     0.43       0.350 O       .       .       .       .
   [BASIN DEPTH(FEET) =    1.87]
10.03     0.00     0.43       0.345 O       .       .       .       .
   [BASIN DEPTH(FEET) =    1.86]
10.15     0.00     0.42       0.341 O       .       .       .       .
   [BASIN DEPTH(FEET) =    1.84]
10.27     0.00     0.42       0.337 O       .       .       .       .
   [BASIN DEPTH(FEET) =    1.83]
10.38     0.00     0.42       0.333 O       .       .       .       .
   [BASIN DEPTH(FEET) =    1.81]
10.50     0.00     0.41       0.329 O       .       .       .       .
   [BASIN DEPTH(FEET) =    1.80]
10.62     0.00     0.41       0.325 O       .       .       .       .
   [BASIN DEPTH(FEET) =    1.79]
10.73     0.00     0.41       0.321 O       .       .       .       .
   [BASIN DEPTH(FEET) =    1.77]
10.85     0.00     0.40       0.317 O       .       .       .       .
   [BASIN DEPTH(FEET) =    1.76]
10.97     0.00     0.40       0.314 O       .       .       .       .
   [BASIN DEPTH(FEET) =    1.75]
11.08     0.00     0.40       0.310 O       .       .       .       .
   [BASIN DEPTH(FEET) =    1.73]
11.20     0.00     0.39       0.306 O       .       .       .       .
   [BASIN DEPTH(FEET) =    1.72]
11.32     0.00     0.39       0.302 O       .       .       .       .
   [BASIN DEPTH(FEET) =    1.71]
11.43     0.00     0.39       0.298 O       .       .       .       .
   [BASIN DEPTH(FEET) =    1.70]
11.55     0.00     0.39       0.295 O       .       .       .       .
   [BASIN DEPTH(FEET) =    1.68]
11.67     0.00     0.38       0.291 O       .       .       .       .
   [BASIN DEPTH(FEET) =    1.67]
```

BASIN 2D
PROPOSED HYDROLOGY

RATIONAL METHOD HYDROGRAPH PROGRAM
COPYRIGHT 1992, 2001 RICK ENGINEERING COMPANY
RUN DATE 10/22/2014

TIME OF CONCENTRATION 7 MIN.
6 HOUR RAINFALL 3.2 INCHES
BASIN AREA 1.8 ACRES
RUNOFF COEFFICIENT 0.71
PEAK DISCHARGE 8.91 CFS

53 INTERVALS
TIME (MIN) = 0 DISCHARGE (CFS) = 0
TIME (MIN) = 7 DISCHARGE (CFS) = 0.2
TIME (MIN) = 14 DISCHARGE (CFS) = 0.2
TIME (MIN) = 21 DISCHARGE (CFS) = 0.3
TIME (MIN) = 28 DISCHARGE (CFS) = 0.3
TIME (MIN) = 35 DISCHARGE (CFS) = 0.3
TIME (MIN) = 42 DISCHARGE (CFS) = 0.3
TIME (MIN) = 49 DISCHARGE (CFS) = 0.3
TIME (MIN) = 56 DISCHARGE (CFS) = 0.3
TIME (MIN) = 63 DISCHARGE (CFS) = 0.3
TIME (MIN) = 70 DISCHARGE (CFS) = 0.3
TIME (MIN) = 77 DISCHARGE (CFS) = 0.3
TIME (MIN) = 84 DISCHARGE (CFS) = 0.3
TIME (MIN) = 91 DISCHARGE (CFS) = 0.3
TIME (MIN) = 98 DISCHARGE (CFS) = 0.3
TIME (MIN) = 105 DISCHARGE (CFS) = 0.3
TIME (MIN) = 112 DISCHARGE (CFS) = 0.4
TIME (MIN) = 119 DISCHARGE (CFS) = 0.4
TIME (MIN) = 126 DISCHARGE (CFS) = 0.4
TIME (MIN) = 133 DISCHARGE (CFS) = 0.4
TIME (MIN) = 140 DISCHARGE (CFS) = 0.4
TIME (MIN) = 147 DISCHARGE (CFS) = 0.4
TIME (MIN) = 154 DISCHARGE (CFS) = 0.5
TIME (MIN) = 161 DISCHARGE (CFS) = 0.5
TIME (MIN) = 168 DISCHARGE (CFS) = 0.5
TIME (MIN) = 175 DISCHARGE (CFS) = 0.5
TIME (MIN) = 182 DISCHARGE (CFS) = 0.6
TIME (MIN) = 189 DISCHARGE (CFS) = 0.6
TIME (MIN) = 196 DISCHARGE (CFS) = 0.7
TIME (MIN) = 203 DISCHARGE (CFS) = 0.8
TIME (MIN) = 210 DISCHARGE (CFS) = 0.8
TIME (MIN) = 217 DISCHARGE (CFS) = 1

TIME (MIN) = 224 DISCHARGE (CFS) = 1.2
TIME (MIN) = 231 DISCHARGE (CFS) = 1.7
TIME (MIN) = 238 DISCHARGE (CFS) = 2.2
TIME (MIN) = 245 DISCHARGE (CFS) = 8.91
TIME (MIN) = 252 DISCHARGE (CFS) = 1.4
TIME (MIN) = 259 DISCHARGE (CFS) = 0.9
TIME (MIN) = 266 DISCHARGE (CFS) = 0.7
TIME (MIN) = 273 DISCHARGE (CFS) = 0.6
TIME (MIN) = 280 DISCHARGE (CFS) = 0.5
TIME (MIN) = 287 DISCHARGE (CFS) = 0.5
TIME (MIN) = 294 DISCHARGE (CFS) = 0.4
TIME (MIN) = 301 DISCHARGE (CFS) = 0.4
TIME (MIN) = 308 DISCHARGE (CFS) = 0.4
TIME (MIN) = 315 DISCHARGE (CFS) = 0.3
TIME (MIN) = 322 DISCHARGE (CFS) = 0.3
TIME (MIN) = 329 DISCHARGE (CFS) = 0.3
TIME (MIN) = 336 DISCHARGE (CFS) = 0.3
TIME (MIN) = 343 DISCHARGE (CFS) = 0.3
TIME (MIN) = 350 DISCHARGE (CFS) = 0.3
TIME (MIN) = 357 DISCHARGE (CFS) = 0.3
TIME (MIN) = 364 DISCHARGE (CFS) = 0

```
****************************************************************************
                  HYDRAULICS ELEMENTS - II  PROGRAM PACKAGE

                   STORAGE BASIN HYDROGRAPH ROUTING MODEL
****************************************************************************
         (c) Copyright 1983-2012 Advanced Engineering Software (aes)
             Ver. 19.0  Release Date: 06/01/2012  License ID 1355

                             Analysis prepared by:

                               Fuscoe Engineering
                               6390 Greenwich Dr.
                                   Suite 170
                              San Diego, CA 92122

 ************************** DESCRIPTION OF STUDY **************************
* PROPOSED HYDROLOGY                                                       *
* DETENTION BASIN 2D AT NODE 253.2                                         *
* OCTOBER 2014                                                             *
 ***************************************************************************

    FILE NAME: BASIN2D.DAT
    TIME/DATE OF STUDY: 15:24 10/22/2014
===============================================================================
    ENTERED INFORMATION:
-------------------------------------------------------------------------------
    TOTAL NUMBER OF INFLOW HYDROGRAPH INTERVALS =   53
    CONSTANT HYDROGRAPH TIME UNIT(MINUTES) =    7.000
    ASSUMED INITIAL DEPTH(FEET) IN STORAGE BASIN =    0.00
-------------------------------------------------------------------------------
    ENTERED INFLOW HYDROGRAPH ORDINATES(CFS):
    *INTERVAL    FLOW   *INTERVAL    FLOW   *INTERVAL    FLOW   *
    * NUMBER     (CFS)  * NUMBER     (CFS)  * NUMBER     (CFS)  *
    *    1:         0.00*    2:         0.20*    3:         0.20*
    *    4:         0.30*    5:         0.30*    6:         0.30*
    *    7:         0.30*    8:         0.30*    9:         0.30*
    *   10:         0.30*   11:         0.30*   12:         0.30*
    *   13:         0.30*   14:         0.30*   15:         0.30*
    *   16:         0.30*   17:         0.40*   18:         0.40*
    *   19:         0.40*   20:         0.40*   21:         0.40*
    *   22:         0.40*   23:         0.50*   24:         0.50*
    *   25:         0.50*   26:         0.50*   27:         0.60*
    *   28:         0.60*   29:         0.70*   30:         0.80*
    *   31:         0.80*   32:         1.00*   33:         1.20*
    *   34:         1.70*   35:         2.20*   36:         8.91*
    *   37:         1.40*   38:         0.90*   39:         0.70*
    *   40:         0.60*   41:         0.50*   42:         0.50*
    *   43:         0.40*   44:         0.40*   45:         0.40*
    *   46:         0.30*   47:         0.30*   48:         0.30*
    *   49:         0.30*   50:         0.30*   51:         0.30*
    *   52:         0.30*   53:         0.00*
===============================================================================
    DEPTH-VS.-STORAGE AND DEPTH-VS.-DISCHARGE INFORMATION:
-------------------------------------------------------------------------------
    TOTAL NUMBER OF BASIN DEPTH INFORMATION ENTRIES =   5
-------------------------------------------------------------------------------
    *BASIN-DEPTH  STORAGE    OUTFLOW  **BASIN-DEPTH  STORAGE    OUTFLOW  *
    *   (FEET)  (ACRE-FEET)   (CFS)   **   (FEET)  (ACRE-FEET)   (CFS)   *
    *      0.000      0.000      0.000**      1.000      0.101      0.026*
    *      2.000      0.216      1.120**      3.000      0.346     17.270*
    *      4.000      0.492     18.820**
****************************************************************************
```

```
-----------------------------------------------------------------------------
    INITIAL BASIN DEPTH(FEET) =    0.00
    INITIAL BASIN STORAGE(ACRE-FEET) =       0.00
    INITIAL BASIN OUTFLOW(CFS) =       0.00
-----------------------------------------------------------------------------
-----------------------------------------------------------------------------
    BASIN STORAGE, OUTFLOW AND DEPTH ROUTING VALUES:
     INTERVAL   {S-O*DT/2}   {S+O*DT/2}
      NUMBER   (ACRE-FEET) (ACRE-FEET)
          1      0.00000     0.00000
          2      0.10087     0.10113
          3      0.21060     0.22140
          4      0.26274     0.42926
          5      0.40127     0.58273
    WHERE S=STORAGE(AF);O=OUTFLOW(AF/MIN.);DT=UNIT(MIN.)
-----------------------------------------------------------------------------



         *UNIT-HYDROGRAPH STORAGE-BASIN ROUTING*
    NOTE: COMPUTED BASIN DEPTH, OUTFLOW, AND STORAGE QUANTITIES
          OCCUR AT THE GIVEN TIME. BASIN INFLOW VALUES REPRESENT THE
          AVERAGE INFLOW DURING THE RECENT HYDROGRAPH UNIT INTERVAL.

    GRAPH NOTATION: "I"=MEAN UNIT INFLOW; "O"=OUTFLOW AT GIVEN TIME
-----------------------------------------------------------------------------
     TIME   INFLOW  OUTFLOW    STORAGE
    (HOURS) (CFS)    (CFS)    (ACRE-FT)  0.      2.      4.      7.      9.
       0.12     0.00     0.00       0.000 O       .       .       .       .
         [BASIN DEPTH(FEET) =    0.00]
       0.23     0.20     0.00       0.002 O       .       .       .       .
         [BASIN DEPTH(FEET) =    0.02]
       0.35     0.20     0.00       0.004 O       .       .       .       .
         [BASIN DEPTH(FEET) =    0.04]
       0.47     0.30     0.00       0.007 OI      .       .       .       .
         [BASIN DEPTH(FEET) =    0.07]
       0.58     0.30     0.00       0.010 OI      .       .       .       .
         [BASIN DEPTH(FEET) =    0.10]
       0.70     0.30     0.00       0.012 OI      .       .       .       .
         [BASIN DEPTH(FEET) =    0.12]
       0.82     0.30     0.00       0.015 OI      .       .       .       .
         [BASIN DEPTH(FEET) =    0.15]
       0.93     0.30     0.00       0.018 OI      .       .       .       .
         [BASIN DEPTH(FEET) =    0.18]
       1.05     0.30     0.01       0.021 OI      .       .       .       .
         [BASIN DEPTH(FEET) =    0.21]
       1.17     0.30     0.01       0.024 OI      .       .       .       .
         [BASIN DEPTH(FEET) =    0.24]
       1.28     0.30     0.01       0.027 OI      .       .       .       .
         [BASIN DEPTH(FEET) =    0.26]
       1.40     0.30     0.01       0.030 OI      .       .       .       .
         [BASIN DEPTH(FEET) =    0.29]
       1.52     0.30     0.01       0.032 OI      .       .       .       .
         [BASIN DEPTH(FEET) =    0.32]
       1.63     0.30     0.01       0.035 OI      .       .       .       .
         [BASIN DEPTH(FEET) =    0.35]
       1.75     0.30     0.01       0.038 OI      .       .       .       .
         [BASIN DEPTH(FEET) =    0.38]
       1.87     0.30     0.01       0.041 OI      .       .       .       .
         [BASIN DEPTH(FEET) =    0.40]
       1.98     0.40     0.01       0.044 OI      .       .       .       .
```

```
  [BASIN DEPTH(FEET) =    0.44]
2.10     0.40     0.01       0.048 OI      .       .       .       .
  [BASIN DEPTH(FEET) =    0.48]
2.22     0.40     0.01       0.052 OI      .       .       .       .
  [BASIN DEPTH(FEET) =    0.51]
2.33     0.40     0.01       0.056 OI      .       .       .       .
  [BASIN DEPTH(FEET) =    0.55]
2.45     0.40     0.02       0.059 OI      .       .       .       .
  [BASIN DEPTH(FEET) =    0.59]
2.57     0.40     0.02       0.063 OI      .       .       .       .
  [BASIN DEPTH(FEET) =    0.62]
2.68     0.50     0.02       0.068 OI      .       .       .       .
  [BASIN DEPTH(FEET) =    0.67]
2.80     0.50     0.02       0.072 OI      .       .       .       .
  [BASIN DEPTH(FEET) =    0.72]
2.92     0.50     0.02       0.077 OI      .       .       .       .
  [BASIN DEPTH(FEET) =    0.76]
3.03     0.50     0.02       0.082 OI      .       .       .       .
  [BASIN DEPTH(FEET) =    0.81]
3.15     0.60     0.02       0.087 O I     .       .       .       .
  [BASIN DEPTH(FEET) =    0.86]
3.27     0.60     0.02       0.093 O I     .       .       .       .
  [BASIN DEPTH(FEET) =    0.92]
3.38     0.70     0.03       0.099 O I     .       .       .       .
  [BASIN DEPTH(FEET) =    0.98]
3.50     0.80     0.08       0.107 O I     .       .       .       .
  [BASIN DEPTH(FEET) =    1.05]
3.62     0.80     0.14       0.113 O I     .       .       .       .
  [BASIN DEPTH(FEET) =    1.11]
3.73     1.00     0.22       0.121 O  I    .       .       .       .
  [BASIN DEPTH(FEET) =    1.17]
3.85     1.20     0.30       0.130 .O  I   .       .       .       .
  [BASIN DEPTH(FEET) =    1.25]
3.97     1.70     0.43       0.143 .O    I .       .       .       .
  [BASIN DEPTH(FEET) =    1.37]
4.08     2.20     0.58       0.159 . O    I.       .       .       .
  [BASIN DEPTH(FEET) =    1.51]
4.20     8.91     2.76       0.229 .       .O      .       .       I
  [BASIN DEPTH(FEET) =    2.10]
4.32     1.40     1.74       0.221 .    IO .       .       .       .
  [BASIN DEPTH(FEET) =    2.04]
4.43     0.90     1.12       0.216 .  IO   .       .       .       .
  [BASIN DEPTH(FEET) =    2.00]
4.55     0.70     1.08       0.212 . IO    .       .       .       .
  [BASIN DEPTH(FEET) =    1.97]
4.67     0.60     1.04       0.208 . IO    .       .       .       .
  [BASIN DEPTH(FEET) =    1.93]
4.78     0.50     0.99       0.203 .I O    .       .       .       .
  [BASIN DEPTH(FEET) =    1.88]
4.90     0.50     0.95       0.198 .I O    .       .       .       .
  [BASIN DEPTH(FEET) =    1.84]
5.02     0.40     0.90       0.193 .I O    .       .       .       .
  [BASIN DEPTH(FEET) =    1.80]
5.13     0.40     0.86       0.188 .I O    .       .       .       .
  [BASIN DEPTH(FEET) =    1.76]
5.25     0.40     0.82       0.184 .IO     .       .       .       .
  [BASIN DEPTH(FEET) =    1.72]
5.37     0.30     0.77       0.179 .IO     .       .       .       .
  [BASIN DEPTH(FEET) =    1.68]
5.48     0.30     0.73       0.175 .IO     .       .       .       .
  [BASIN DEPTH(FEET) =    1.64]
5.60     0.30     0.69       0.171 .IO     .       .       .       .
  [BASIN DEPTH(FEET) =    1.61]
```

```
5.72     0.30     0.66       0.167 .IO     .       .       .       .
  [BASIN DEPTH(FEET) =    1.58]
5.83     0.30     0.63       0.164 .IO     .       .       .       .
  [BASIN DEPTH(FEET) =    1.55]
5.95     0.30     0.60       0.161 .IO     .       .       .       .
  [BASIN DEPTH(FEET) =    1.52]
6.07     0.30     0.57       0.158 .IO     .       .       .       .
  [BASIN DEPTH(FEET) =    1.50]
6.18     0.00     0.52       0.153 IO      .       .       .       .
  [BASIN DEPTH(FEET) =    1.45]
6.30     0.00     0.48       0.148 IO      .       .       .       .
  [BASIN DEPTH(FEET) =    1.41]
6.42     0.00     0.43       0.144 IO      .       .       .       .
  [BASIN DEPTH(FEET) =    1.37]
6.53     0.00     0.40       0.140 IO      .       .       .       .
  [BASIN DEPTH(FEET) =    1.34]
6.65     0.00     0.36       0.136 IO      .       .       .       .
  [BASIN DEPTH(FEET) =    1.31]
6.77     0.00     0.33       0.133 IO      .       .       .       .
  [BASIN DEPTH(FEET) =    1.28]
6.88     0.00     0.30       0.130 IO      .       .       .       .
  [BASIN DEPTH(FEET) =    1.25]
7.00     0.00     0.27       0.127 O       .       .       .       .
  [BASIN DEPTH(FEET) =    1.23]
7.12     0.00     0.25       0.125 O       .       .       .       .
  [BASIN DEPTH(FEET) =    1.21]
7.23     0.00     0.23       0.122 O       .       .       .       .
  [BASIN DEPTH(FEET) =    1.19]
7.35     0.00     0.21       0.120 O       .       .       .       .
  [BASIN DEPTH(FEET) =    1.17]
7.47     0.00     0.19       0.118 O       .       .       .       .
  [BASIN DEPTH(FEET) =    1.15]
7.58     0.00     0.17       0.116 O       .       .       .       .
  [BASIN DEPTH(FEET) =    1.13]
7.70     0.00     0.16       0.115 O       .       .       .       .
  [BASIN DEPTH(FEET) =    1.12]
7.82     0.00     0.14       0.113 O       .       .       .       .
  [BASIN DEPTH(FEET) =    1.11]
7.93     0.00     0.13       0.112 O       .       .       .       .
  [BASIN DEPTH(FEET) =    1.10]
8.05     0.00     0.12       0.111 O       .       .       .       .
  [BASIN DEPTH(FEET) =    1.09]
8.17     0.00     0.11       0.110 O       .       .       .       .
  [BASIN DEPTH(FEET) =    1.08]
8.28     0.00     0.10       0.109 O       .       .       .       .
  [BASIN DEPTH(FEET) =    1.07]
8.40     0.00     0.09       0.108 O       .       .       .       .
  [BASIN DEPTH(FEET) =    1.06]
8.52     0.00     0.08       0.107 O       .       .       .       .
  [BASIN DEPTH(FEET) =    1.05]
8.63     0.00     0.08       0.106 O       .       .       .       .
  [BASIN DEPTH(FEET) =    1.05]
8.75     0.00     0.07       0.106 O       .       .       .       .
  [BASIN DEPTH(FEET) =    1.04]
8.87     0.00     0.06       0.105 O       .       .       .       .
  [BASIN DEPTH(FEET) =    1.03]
8.98     0.00     0.06       0.104 O       .       .       .       .
  [BASIN DEPTH(FEET) =    1.03]
9.10     0.00     0.05       0.104 O       .       .       .       .
  [BASIN DEPTH(FEET) =    1.02]
9.22     0.00     0.05       0.103 O       .       .       .       .
  [BASIN DEPTH(FEET) =    1.02]
9.33     0.00     0.04       0.103 O       .       .       .       .
```

```
   [BASIN DEPTH(FEET) =    1.02]
 9.45     0.00     0.04       0.102 O       .       .       .       .
   [BASIN DEPTH(FEET) =    1.01]
 9.57     0.00     0.04       0.102 O       .       .       .       .
   [BASIN DEPTH(FEET) =    1.01]
 9.68     0.00     0.03       0.102 O       .       .       .       .
   [BASIN DEPTH(FEET) =    1.01]
 9.80     0.00     0.03       0.101 O       .       .       .       .
   [BASIN DEPTH(FEET) =    1.00]
 9.92     0.00     0.03       0.101 O       .       .       .       .
   [BASIN DEPTH(FEET) =    1.00]
10.03     0.00     0.03       0.101 O       .       .       .       .
   [BASIN DEPTH(FEET) =    1.00]
10.15     0.00     0.03       0.101 O       .       .       .       .
   [BASIN DEPTH(FEET) =    1.00]
10.27     0.00     0.03       0.100 O       .       .       .       .
   [BASIN DEPTH(FEET) =    0.99]
10.38     0.00     0.03       0.100 O       .       .       .       .
   [BASIN DEPTH(FEET) =    0.99]
10.50     0.00     0.03       0.100 O       .       .       .       .
   [BASIN DEPTH(FEET) =    0.99]
10.62     0.00     0.03       0.100 O       .       .       .       .
   [BASIN DEPTH(FEET) =    0.99]
10.73     0.00     0.03       0.099 O       .       .       .       .
   [BASIN DEPTH(FEET) =    0.98]
10.85     0.00     0.03       0.099 O       .       .       .       .
   [BASIN DEPTH(FEET) =    0.98]
10.97     0.00     0.03       0.099 O       .       .       .       .
   [BASIN DEPTH(FEET) =    0.98]
11.08     0.00     0.03       0.099 O       .       .       .       .
   [BASIN DEPTH(FEET) =    0.98]
11.20     0.00     0.03       0.098 O       .       .       .       .
   [BASIN DEPTH(FEET) =    0.97]
11.32     0.00     0.03       0.098 O       .       .       .       .
   [BASIN DEPTH(FEET) =    0.97]
11.43     0.00     0.03       0.098 O       .       .       .       .
   [BASIN DEPTH(FEET) =    0.97]
11.55     0.00     0.03       0.098 O       .       .       .       .
   [BASIN DEPTH(FEET) =    0.97]
11.67     0.00     0.03       0.097 O       .       .       .       .
   [BASIN DEPTH(FEET) =    0.97]
```

BASIN 2E
PROPOSED HYDROLOGY

RATIONAL METHOD HYDROGRAPH PROGRAM
COPYRIGHT 1992, 2001 RICK ENGINEERING COMPANY
RUN DATE 10/22/2014

TIME OF CONCENTRATION 9 MIN.
6 HOUR RAINFALL 3.2 INCHES
BASIN AREA 6.5 ACRES
RUNOFF COEFFICIENT 0.71
PEAK DISCHARGE 29.1 CFS

42 INTERVALS
TIME (MIN) = 0 DISCHARGE (CFS) = 0
TIME (MIN) = 9 DISCHARGE (CFS) = 0.2
TIME (MIN) = 18 DISCHARGE (CFS) = 0.9
TIME (MIN) = 27 DISCHARGE (CFS) = 0.9
TIME (MIN) = 36 DISCHARGE (CFS) = 0.9
TIME (MIN) = 45 DISCHARGE (CFS) = 1
TIME (MIN) = 54 DISCHARGE (CFS) = 1
TIME (MIN) = 63 DISCHARGE (CFS) = 1
TIME (MIN) = 72 DISCHARGE (CFS) = 1.1
TIME (MIN) = 81 DISCHARGE (CFS) = 1.1
TIME (MIN) = 90 DISCHARGE (CFS) = 1.1
TIME (MIN) = 99 DISCHARGE (CFS) = 1.2
TIME (MIN) = 108 DISCHARGE (CFS) = 1.2
TIME (MIN) = 117 DISCHARGE (CFS) = 1.3
TIME (MIN) = 126 DISCHARGE (CFS) = 1.3
TIME (MIN) = 135 DISCHARGE (CFS) = 1.4
TIME (MIN) = 144 DISCHARGE (CFS) = 1.5
TIME (MIN) = 153 DISCHARGE (CFS) = 1.6
TIME (MIN) = 162 DISCHARGE (CFS) = 1.7
TIME (MIN) = 171 DISCHARGE (CFS) = 1.8
TIME (MIN) = 180 DISCHARGE (CFS) = 2
TIME (MIN) = 189 DISCHARGE (CFS) = 2.1
TIME (MIN) = 198 DISCHARGE (CFS) = 2.4
TIME (MIN) = 207 DISCHARGE (CFS) = 2.6
TIME (MIN) = 216 DISCHARGE (CFS) = 3.2
TIME (MIN) = 225 DISCHARGE (CFS) = 3.6
TIME (MIN) = 234 DISCHARGE (CFS) = 5.3
TIME (MIN) = 243 DISCHARGE (CFS) = 5
TIME (MIN) = 252 DISCHARGE (CFS) = 29.1
TIME (MIN) = 261 DISCHARGE (CFS) = 4.2
TIME (MIN) = 270 DISCHARGE (CFS) = 2.8
TIME (MIN) = 279 DISCHARGE (CFS) = 2.2

TIME (MIN) = 288 DISCHARGE (CFS) = 1.9
TIME (MIN) = 297 DISCHARGE (CFS) = 1.6
TIME (MIN) = 306 DISCHARGE (CFS) = 1.4
TIME (MIN) = 315 DISCHARGE (CFS) = 1.3
TIME (MIN) = 324 DISCHARGE (CFS) = 1.2
TIME (MIN) = 333 DISCHARGE (CFS) = 1.1
TIME (MIN) = 342 DISCHARGE (CFS) = 1
TIME (MIN) = 351 DISCHARGE (CFS) = 1
TIME (MIN) = 360 DISCHARGE (CFS) = 0.9
TIME (MIN) = 369 DISCHARGE (CFS) = 0

```
****************************************************************************
                  HYDRAULICS ELEMENTS - II  PROGRAM PACKAGE

                   STORAGE BASIN HYDROGRAPH ROUTING MODEL
****************************************************************************
         (c) Copyright 1983-2012 Advanced Engineering Software (aes)
             Ver. 19.0  Release Date: 06/01/2012  License ID 1355

                            Analysis prepared by:

                              Fuscoe Engineering
                              6390 Greenwich Dr.
                                  Suite 170
                             San Diego, CA 92122

 ************************** DESCRIPTION OF STUDY **************************
* PROPOSED HYDROLOGY                                                       *
* DETENTION BASIN 2E AT NODE 2029                                          *
* OCTOBER 2014                                                             *
 ***************************************************************************

    FILE NAME: BASIN2E.DAT
    TIME/DATE OF STUDY: 13:59 10/24/2014
============================================================================
    ENTERED INFORMATION:
----------------------------------------------------------------------------
    TOTAL NUMBER OF INFLOW HYDROGRAPH INTERVALS =   42
    CONSTANT HYDROGRAPH TIME UNIT(MINUTES) =    9.000
    ASSUMED INITIAL DEPTH(FEET) IN STORAGE BASIN =    0.00
----------------------------------------------------------------------------
    ENTERED INFLOW HYDROGRAPH ORDINATES(CFS):
    *INTERVAL    FLOW   *INTERVAL    FLOW   *INTERVAL    FLOW   *
    * NUMBER     (CFS)  * NUMBER     (CFS)  * NUMBER     (CFS)  *
    *    1:         0.00*    2:         0.20*    3:         0.90*
    *    4:         0.90*    5:         0.90*    6:         1.00*
    *    7:         1.00*    8:         1.00*    9:         1.10*
    *   10:         1.10*   11:         1.10*   12:         1.20*
    *   13:         1.20*   14:         1.30*   15:         1.30*
    *   16:         1.40*   17:         1.50*   18:         1.60*
    *   19:         1.70*   20:         1.80*   21:         2.00*
    *   22:         2.10*   23:         2.40*   24:         2.60*
    *   25:         3.20*   26:         3.60*   27:         5.30*
    *   28:         5.00*   29:        29.10*   30:         4.20*
    *   31:         2.80*   32:         2.20*   33:         1.90*
    *   34:         1.60*   35:         1.40*   36:         1.30*
    *   37:         1.20*   38:         1.10*   39:         1.00*
    *   40:         1.00*   41:         0.90*   42:         0.00*
============================================================================
    DEPTH-VS.-STORAGE AND DEPTH-VS.-DISCHARGE INFORMATION:
----------------------------------------------------------------------------
    TOTAL NUMBER OF BASIN DEPTH INFORMATION ENTRIES =   6
----------------------------------------------------------------------------
    *BASIN-DEPTH  STORAGE    OUTFLOW  **BASIN-DEPTH  STORAGE    OUTFLOW  *
    *   (FEET)  (ACRE-FEET)   (CFS)   **   (FEET)  (ACRE-FEET)   (CFS)   *
    *      0.000      0.000      0.000**      1.000      0.168      0.100*
    *      2.000      0.353      0.145**      3.000      0.556      1.553*
    *      4.000      0.778      4.153**      5.000      1.018     28.750*
****************************************************************************
----------------------------------------------------------------------------
    INITIAL BASIN DEPTH(FEET) =    0.00
    INITIAL BASIN STORAGE(ACRE-FEET) =       0.00
    INITIAL BASIN OUTFLOW(CFS) =       0.00
```

```
-----------------------------------------------------------------------------
-----------------------------------------------------------------------------
    BASIN STORAGE, OUTFLOW AND DEPTH ROUTING VALUES:
     INTERVAL   {S-O*DT/2}   {S+O*DT/2}
      NUMBER   (ACRE-FEET) (ACRE-FEET)
          1      0.00000     0.00000
          2      0.16738     0.16862
          3      0.35210     0.35390
          4      0.54637     0.56563
          5      0.75226     0.80374
          6      0.83980     1.19620
    WHERE S=STORAGE(AF);O=OUTFLOW(AF/MIN.);DT=UNIT(MIN.)
-----------------------------------------------------------------------------



         *UNIT-HYDROGRAPH STORAGE-BASIN ROUTING*
    NOTE: COMPUTED BASIN DEPTH, OUTFLOW, AND STORAGE QUANTITIES
          OCCUR AT THE GIVEN TIME. BASIN INFLOW VALUES REPRESENT THE
          AVERAGE INFLOW DURING THE RECENT HYDROGRAPH UNIT INTERVAL.

    GRAPH NOTATION: "I"=MEAN UNIT INFLOW; "O"=OUTFLOW AT GIVEN TIME
-----------------------------------------------------------------------------
     TIME   INFLOW  OUTFLOW    STORAGE
    (HOURS) (CFS)    (CFS)    (ACRE-FT)  0.      7.     15.     22.     29.
       0.15     0.00     0.00       0.000 O       .       .       .       .
         [BASIN DEPTH(FEET) =    0.00]
       0.30     0.20     0.00       0.002 O       .       .       .       .
         [BASIN DEPTH(FEET) =    0.01]
       0.45     0.90     0.01       0.014 O       .       .       .       .
         [BASIN DEPTH(FEET) =    0.08]
       0.60     0.90     0.01       0.025 O       .       .       .       .
         [BASIN DEPTH(FEET) =    0.15]
       0.75     0.90     0.02       0.036 O       .       .       .       .
         [BASIN DEPTH(FEET) =    0.21]
       0.90     1.00     0.03       0.048 OI      .       .       .       .
         [BASIN DEPTH(FEET) =    0.28]
       1.05     1.00     0.04       0.060 OI      .       .       .       .
         [BASIN DEPTH(FEET) =    0.35]
       1.20     1.00     0.04       0.072 OI      .       .       .       .
         [BASIN DEPTH(FEET) =    0.43]
       1.35     1.10     0.05       0.085 OI      .       .       .       .
         [BASIN DEPTH(FEET) =    0.50]
       1.50     1.10     0.06       0.098 OI      .       .       .       .
         [BASIN DEPTH(FEET) =    0.58]
       1.65     1.10     0.07       0.110 OI      .       .       .       .
         [BASIN DEPTH(FEET) =    0.66]
       1.80     1.20     0.07       0.124 OI      .       .       .       .
         [BASIN DEPTH(FEET) =    0.74]
       1.95     1.20     0.08       0.138 OI      .       .       .       .
         [BASIN DEPTH(FEET) =    0.82]
       2.10     1.30     0.09       0.153 OI      .       .       .       .
         [BASIN DEPTH(FEET) =    0.91]
       2.25     1.30     0.10       0.168 OI      .       .       .       .
         [BASIN DEPTH(FEET) =    1.00]
       2.40     1.40     0.10       0.184 OI      .       .       .       .
         [BASIN DEPTH(FEET) =    1.09]
       2.55     1.50     0.11       0.202 OI      .       .       .       .
         [BASIN DEPTH(FEET) =    1.18]
       2.70     1.60     0.11       0.220 OI      .       .       .       .
         [BASIN DEPTH(FEET) =    1.28]
```

```
2.85     1.70     0.12       0.240 OI      .       .       .       .
  [BASIN DEPTH(FEET) =    1.39]
3.00     1.80     0.12       0.261 OI      .       .       .       .
  [BASIN DEPTH(FEET) =    1.50]
3.15     2.00     0.13       0.284 O I     .       .       .       .
  [BASIN DEPTH(FEET) =    1.63]
3.30     2.10     0.13       0.308 O I     .       .       .       .
  [BASIN DEPTH(FEET) =    1.76]
3.45     2.40     0.14       0.336 O I     .       .       .       .
  [BASIN DEPTH(FEET) =    1.91]
3.60     2.60     0.24       0.366 O I     .       .       .       .
  [BASIN DEPTH(FEET) =    2.07]
3.75     3.20     0.48       0.401 O  I    .       .       .       .
  [BASIN DEPTH(FEET) =    2.24]
3.90     3.60     0.74       0.438 O  I    .       .       .       .
  [BASIN DEPTH(FEET) =    2.42]
4.05     5.30     1.11       0.493 .O   I  .       .       .       .
  [BASIN DEPTH(FEET) =    2.69]
4.20     5.00     1.43       0.539 .O   I  .       .       .       .
  [BASIN DEPTH(FEET) =    2.92]
4.35    29.10     9.61       0.831 .       . O     .       .       I
  [BASIN DEPTH(FEET) =    4.22]
4.50     4.20     5.41       0.790 .   IO  .       .       .       .
  [BASIN DEPTH(FEET) =    4.05]
4.65     2.80     4.02       0.767 .  IO   .       .       .       .
  [BASIN DEPTH(FEET) =    3.95]
4.80     2.20     3.77       0.746 . I O   .       .       .       .
  [BASIN DEPTH(FEET) =    3.85]
4.95     1.90     3.52       0.724 . IO    .       .       .       .
  [BASIN DEPTH(FEET) =    3.76]
5.10     1.60     3.26       0.702 .I O    .       .       .       .
  [BASIN DEPTH(FEET) =    3.66]
5.25     1.40     3.01       0.680 .I O    .       .       .       .
  [BASIN DEPTH(FEET) =    3.56]
5.40     1.30     2.78       0.660 .I O    .       .       .       .
  [BASIN DEPTH(FEET) =    3.47]
5.55     1.20     2.56       0.642 .IO     .       .       .       .
  [BASIN DEPTH(FEET) =    3.39]
5.70     1.10     2.36       0.625 .IO     .       .       .       .
  [BASIN DEPTH(FEET) =    3.31]
5.85     1.00     2.18       0.610 .IO     .       .       .       .
  [BASIN DEPTH(FEET) =    3.24]
6.00     1.00     2.02       0.596 .IO     .       .       .       .
  [BASIN DEPTH(FEET) =    3.18]
6.15     0.90     1.87       0.583 I O     .       .       .       .
  [BASIN DEPTH(FEET) =    3.12]
6.30     0.00     1.62       0.561 IO      .       .       .       .
  [BASIN DEPTH(FEET) =    3.02]
6.45     0.00     1.46       0.542 IO      .       .       .       .
  [BASIN DEPTH(FEET) =    2.93]
6.60     0.00     1.34       0.525 IO      .       .       .       .
  [BASIN DEPTH(FEET) =    2.85]
6.75     0.00     1.23       0.509 IO      .       .       .       .
  [BASIN DEPTH(FEET) =    2.77]
6.90     0.00     1.13       0.494 IO      .       .       .       .
  [BASIN DEPTH(FEET) =    2.70]
7.05     0.00     1.03       0.481 IO      .       .       .       .
  [BASIN DEPTH(FEET) =    2.63]
7.20     0.00     0.95       0.469 IO      .       .       .       .
  [BASIN DEPTH(FEET) =    2.57]
7.35     0.00     0.87       0.458 O       .       .       .       .
  [BASIN DEPTH(FEET) =    2.52]
7.50     0.00     0.80       0.447 O       .       .       .       .
```

```
   [BASIN DEPTH(FEET) =    2.46]
 7.65     0.00     0.73       0.438 O       .       .       .       .
   [BASIN DEPTH(FEET) =    2.42]
 7.80     0.00     0.67       0.429 O       .       .       .       .
   [BASIN DEPTH(FEET) =    2.37]
 7.95     0.00     0.62       0.421 O       .       .       .       .
   [BASIN DEPTH(FEET) =    2.34]
 8.10     0.00     0.57       0.414 O       .       .       .       .
   [BASIN DEPTH(FEET) =    2.30]
 8.25     0.00     0.52       0.407 O       .       .       .       .
   [BASIN DEPTH(FEET) =    2.27]
 8.40     0.00     0.48       0.401 O       .       .       .       .
   [BASIN DEPTH(FEET) =    2.24]
 8.55     0.00     0.44       0.395 O       .       .       .       .
   [BASIN DEPTH(FEET) =    2.21]
 8.70     0.00     0.40       0.390 O       .       .       .       .
   [BASIN DEPTH(FEET) =    2.18]
 8.85     0.00     0.37       0.385 O       .       .       .       .
   [BASIN DEPTH(FEET) =    2.16]
 9.00     0.00     0.34       0.381 O       .       .       .       .
   [BASIN DEPTH(FEET) =    2.14]
 9.15     0.00     0.31       0.377 O       .       .       .       .
   [BASIN DEPTH(FEET) =    2.12]
 9.30     0.00     0.28       0.373 O       .       .       .       .
   [BASIN DEPTH(FEET) =    2.10]
 9.45     0.00     0.26       0.370 O       .       .       .       .
   [BASIN DEPTH(FEET) =    2.08]
 9.60     0.00     0.24       0.367 O       .       .       .       .
   [BASIN DEPTH(FEET) =    2.07]
 9.75     0.00     0.22       0.364 O       .       .       .       .
   [BASIN DEPTH(FEET) =    2.05]
 9.90     0.00     0.20       0.361 O       .       .       .       .
   [BASIN DEPTH(FEET) =    2.04]
10.05     0.00     0.18       0.359 O       .       .       .       .
   [BASIN DEPTH(FEET) =    2.03]
10.20     0.00     0.17       0.357 O       .       .       .       .
   [BASIN DEPTH(FEET) =    2.02]
10.35     0.00     0.16       0.355 O       .       .       .       .
   [BASIN DEPTH(FEET) =    2.01]
10.50     0.00     0.14       0.353 O       .       .       .       .
   [BASIN DEPTH(FEET) =    2.00]
10.65     0.00     0.14       0.351 O       .       .       .       .
   [BASIN DEPTH(FEET) =    1.99]
10.80     0.00     0.14       0.349 O       .       .       .       .
   [BASIN DEPTH(FEET) =    1.98]
10.95     0.00     0.14       0.347 O       .       .       .       .
   [BASIN DEPTH(FEET) =    1.97]
11.10     0.00     0.14       0.346 O       .       .       .       .
   [BASIN DEPTH(FEET) =    1.96]
11.25     0.00     0.14       0.344 O       .       .       .       .
   [BASIN DEPTH(FEET) =    1.95]
11.40     0.00     0.14       0.342 O       .       .       .       .
   [BASIN DEPTH(FEET) =    1.94]
11.55     0.00     0.14       0.340 O       .       .       .       .
   [BASIN DEPTH(FEET) =    1.93]
11.70     0.00     0.14       0.338 O       .       .       .       .
   [BASIN DEPTH(FEET) =    1.92]
11.85     0.00     0.14       0.337 O       .       .       .       .
   [BASIN DEPTH(FEET) =    1.91]
12.00     0.00     0.14       0.335 O       .       .       .       .
   [BASIN DEPTH(FEET) =    1.90]
12.15     0.00     0.14       0.333 O       .       .       .       .
   [BASIN DEPTH(FEET) =    1.89]
```

```
12.30     0.00     0.14       0.332 O       .       .       .       .
   [BASIN DEPTH(FEET) =    1.88]
12.45     0.00     0.14       0.330 O       .       .       .       .
   [BASIN DEPTH(FEET) =    1.87]
12.60     0.00     0.14       0.328 O       .       .       .       .
   [BASIN DEPTH(FEET) =    1.87]
12.75     0.00     0.14       0.326 O       .       .       .       .
   [BASIN DEPTH(FEET) =    1.86]
12.90     0.00     0.14       0.325 O       .       .       .       .
   [BASIN DEPTH(FEET) =    1.85]
13.05     0.00     0.14       0.323 O       .       .       .       .
   [BASIN DEPTH(FEET) =    1.84]
13.20     0.00     0.14       0.321 O       .       .       .       .
   [BASIN DEPTH(FEET) =    1.83]
13.35     0.00     0.14       0.320 O       .       .       .       .
   [BASIN DEPTH(FEET) =    1.82]
13.50     0.00     0.14       0.318 O       .       .       .       .
   [BASIN DEPTH(FEET) =    1.81]
13.65     0.00     0.14       0.316 O       .       .       .       .
   [BASIN DEPTH(FEET) =    1.80]
13.80     0.00     0.14       0.314 O       .       .       .       .
   [BASIN DEPTH(FEET) =    1.79]
13.95     0.00     0.14       0.313 O       .       .       .       .
   [BASIN DEPTH(FEET) =    1.78]
14.10     0.00     0.13       0.311 O       .       .       .       .
   [BASIN DEPTH(FEET) =    1.77]
14.25     0.00     0.13       0.309 O       .       .       .       .
   [BASIN DEPTH(FEET) =    1.76]
14.40     0.00     0.13       0.308 O       .       .       .       .
   [BASIN DEPTH(FEET) =    1.76]
14.55     0.00     0.13       0.306 O       .       .       .       .
   [BASIN DEPTH(FEET) =    1.75]
14.70     0.00     0.13       0.304 O       .       .       .       .
   [BASIN DEPTH(FEET) =    1.74]
14.85     0.00     0.13       0.303 O       .       .       .       .
   [BASIN DEPTH(FEET) =    1.73]
15.00     0.00     0.13       0.301 O       .       .       .       .
   [BASIN DEPTH(FEET) =    1.72]
```

BASIN 3A
PROPOSED HYDROLOGY

RATIONAL METHOD HYDROGRAPH PROGRAM
COPYRIGHT 1992, 2001 RICK ENGINEERING COMPANY
RUN DATE 10/22/2014

TIME OF CONCENTRATION 7 MIN.
6 HOUR RAINFALL 3.2 INCHES
BASIN AREA 3.9 ACRES
RUNOFF COEFFICIENT 0.71
PEAK DISCHARGE 18.98 CFS

53 INTERVALS
TIME (MIN) = 0 DISCHARGE (CFS) = 0
TIME (MIN) = 7 DISCHARGE (CFS) = 0.5
TIME (MIN) = 14 DISCHARGE (CFS) = 0.5
TIME (MIN) = 21 DISCHARGE (CFS) = 0.6
TIME (MIN) = 28 DISCHARGE (CFS) = 0.6
TIME (MIN) = 35 DISCHARGE (CFS) = 0.6
TIME (MIN) = 42 DISCHARGE (CFS) = 0.6
TIME (MIN) = 49 DISCHARGE (CFS) = 0.6
TIME (MIN) = 56 DISCHARGE (CFS) = 0.6
TIME (MIN) = 63 DISCHARGE (CFS) = 0.6
TIME (MIN) = 70 DISCHARGE (CFS) = 0.6
TIME (MIN) = 77 DISCHARGE (CFS) = 0.7
TIME (MIN) = 84 DISCHARGE (CFS) = 0.7
TIME (MIN) = 91 DISCHARGE (CFS) = 0.7
TIME (MIN) = 98 DISCHARGE (CFS) = 0.7
TIME (MIN) = 105 DISCHARGE (CFS) = 0.8
TIME (MIN) = 112 DISCHARGE (CFS) = 0.8
TIME (MIN) = 119 DISCHARGE (CFS) = 0.8
TIME (MIN) = 126 DISCHARGE (CFS) = 0.8
TIME (MIN) = 133 DISCHARGE (CFS) = 0.9
TIME (MIN) = 140 DISCHARGE (CFS) = 0.9
TIME (MIN) = 147 DISCHARGE (CFS) = 1
TIME (MIN) = 154 DISCHARGE (CFS) = 1
TIME (MIN) = 161 DISCHARGE (CFS) = 1.1
TIME (MIN) = 168 DISCHARGE (CFS) = 1.1
TIME (MIN) = 175 DISCHARGE (CFS) = 1.2
TIME (MIN) = 182 DISCHARGE (CFS) = 1.2
TIME (MIN) = 189 DISCHARGE (CFS) = 1.4
TIME (MIN) = 196 DISCHARGE (CFS) = 1.5
TIME (MIN) = 203 DISCHARGE (CFS) = 1.7
TIME (MIN) = 210 DISCHARGE (CFS) = 1.8
TIME (MIN) = 217 DISCHARGE (CFS) = 2.2

TIME (MIN) = 224 DISCHARGE (CFS) = 2.5
TIME (MIN) = 231 DISCHARGE (CFS) = 3.7
TIME (MIN) = 238 DISCHARGE (CFS) = 5.1
TIME (MIN) = 245 DISCHARGE (CFS) = 18.98
TIME (MIN) = 252 DISCHARGE (CFS) = 3
TIME (MIN) = 259 DISCHARGE (CFS) = 2
TIME (MIN) = 266 DISCHARGE (CFS) = 1.6
TIME (MIN) = 273 DISCHARGE (CFS) = 1.3
TIME (MIN) = 280 DISCHARGE (CFS) = 1.1
TIME (MIN) = 287 DISCHARGE (CFS) = 1
TIME (MIN) = 294 DISCHARGE (CFS) = 0.9
TIME (MIN) = 301 DISCHARGE (CFS) = 0.8
TIME (MIN) = 308 DISCHARGE (CFS) = 0.8
TIME (MIN) = 315 DISCHARGE (CFS) = 0.7
TIME (MIN) = 322 DISCHARGE (CFS) = 0.7
TIME (MIN) = 329 DISCHARGE (CFS) = 0.7
TIME (MIN) = 336 DISCHARGE (CFS) = 0.6
TIME (MIN) = 343 DISCHARGE (CFS) = 0.6
TIME (MIN) = 350 DISCHARGE (CFS) = 0.6
TIME (MIN) = 357 DISCHARGE (CFS) = 0.5
TIME (MIN) = 364 DISCHARGE (CFS) = 0

```
****************************************************************************
                  HYDRAULICS ELEMENTS - II  PROGRAM PACKAGE

                   STORAGE BASIN HYDROGRAPH ROUTING MODEL
****************************************************************************
         (c) Copyright 1983-2012 Advanced Engineering Software (aes)
             Ver. 19.0  Release Date: 06/01/2012  License ID 1355

                            Analysis prepared by:

                              Fuscoe Engineering
                              6390 Greenwich Dr.
                                  Suite 170
                             San Diego, CA 92122

 ************************** DESCRIPTION OF STUDY **************************
* PROPOSED HYDROLOGY                                                       *
* BASIN 3A AT NODE 337                                                     *
* OCTOBER 2014                                                             *
 ***************************************************************************

    FILE NAME: BASIN3A.DAT
    TIME/DATE OF STUDY: 17:07 10/22/2014
============================================================================
    ENTERED INFORMATION:
----------------------------------------------------------------------------
    TOTAL NUMBER OF INFLOW HYDROGRAPH INTERVALS =   53
    CONSTANT HYDROGRAPH TIME UNIT(MINUTES) =    7.000
    ASSUMED INITIAL DEPTH(FEET) IN STORAGE BASIN =    0.00
----------------------------------------------------------------------------
    ENTERED INFLOW HYDROGRAPH ORDINATES(CFS):
    *INTERVAL    FLOW   *INTERVAL    FLOW   *INTERVAL    FLOW   *
    * NUMBER     (CFS)  * NUMBER     (CFS)  * NUMBER     (CFS)  *
    *    1:         0.00*    2:         0.50*    3:         0.50*
    *    4:         0.60*    5:         0.60*    6:         0.60*
    *    7:         0.60*    8:         0.60*    9:         0.60*
    *   10:         0.60*   11:         0.60*   12:         0.70*
    *   13:         0.70*   14:         0.70*   15:         0.70*
    *   16:         0.80*   17:         0.80*   18:         0.80*
    *   19:         0.80*   20:         0.90*   21:         0.90*
    *   22:         1.00*   23:         1.00*   24:         1.10*
    *   25:         1.10*   26:         1.20*   27:         1.20*
    *   28:         1.40*   29:         1.50*   30:         1.70*
    *   31:         1.80*   32:         2.20*   33:         2.50*
    *   34:         3.70*   35:         5.10*   36:        18.98*
    *   37:         3.00*   38:         2.00*   39:         1.60*
    *   40:         1.30*   41:         1.10*   42:         1.00*
    *   43:         0.90*   44:         0.80*   45:         0.80*
    *   46:         0.70*   47:         0.70*   48:         0.70*
    *   49:         0.60*   50:         0.60*   51:         0.60*
    *   52:         0.50*   53:         0.00*
============================================================================
    DEPTH-VS.-STORAGE AND DEPTH-VS.-DISCHARGE INFORMATION:
----------------------------------------------------------------------------
    TOTAL NUMBER OF BASIN DEPTH INFORMATION ENTRIES =   4
----------------------------------------------------------------------------
    *BASIN-DEPTH  STORAGE    OUTFLOW  **BASIN-DEPTH  STORAGE    OUTFLOW  *
    *   (FEET)  (ACRE-FEET)   (CFS)   **   (FEET)  (ACRE-FEET)   (CFS)   *
    *      0.000      0.000      0.000**      1.000      0.161      0.100*
    *      2.000      0.341      1.627**      3.000      0.541     19.160*
****************************************************************************
----------------------------------------------------------------------------
```

```
    INITIAL BASIN DEPTH(FEET) =    0.00
    INITIAL BASIN STORAGE(ACRE-FEET) =       0.00
    INITIAL BASIN OUTFLOW(CFS) =       0.00
-------------------------------------------------------------------------
-------------------------------------------------------------------------
    BASIN STORAGE, OUTFLOW AND DEPTH ROUTING VALUES:
     INTERVAL   {S-O*DT/2}   {S+O*DT/2}
      NUMBER   (ACRE-FEET) (ACRE-FEET)
          1      0.00000     0.00000
          2      0.16052     0.16148
          3      0.33316     0.34884
          4      0.44863     0.63337
    WHERE S=STORAGE(AF);O=OUTFLOW(AF/MIN.);DT=UNIT(MIN.)
-------------------------------------------------------------------------



         *UNIT-HYDROGRAPH STORAGE-BASIN ROUTING*
    NOTE: COMPUTED BASIN DEPTH, OUTFLOW, AND STORAGE QUANTITIES
          OCCUR AT THE GIVEN TIME. BASIN INFLOW VALUES REPRESENT THE
          AVERAGE INFLOW DURING THE RECENT HYDROGRAPH UNIT INTERVAL.

    GRAPH NOTATION: "I"=MEAN UNIT INFLOW; "O"=OUTFLOW AT GIVEN TIME
-------------------------------------------------------------------------
     TIME   INFLOW  OUTFLOW    STORAGE
    (HOURS) (CFS)    (CFS)    (ACRE-FT)  0.      5.      9.     14.     19.
       0.12     0.00     0.00       0.000 O       .       .       .       .
         [BASIN DEPTH(FEET) =    0.00]
       0.23     0.50     0.00       0.005 O       .       .       .       .
         [BASIN DEPTH(FEET) =    0.03]
       0.35     0.50     0.01       0.010 O       .       .       .       .
         [BASIN DEPTH(FEET) =    0.06]
       0.47     0.60     0.01       0.015 OI      .       .       .       .
         [BASIN DEPTH(FEET) =    0.10]
       0.58     0.60     0.01       0.021 OI      .       .       .       .
         [BASIN DEPTH(FEET) =    0.13]
       0.70     0.60     0.02       0.027 OI      .       .       .       .
         [BASIN DEPTH(FEET) =    0.17]
       0.82     0.60     0.02       0.032 OI      .       .       .       .
         [BASIN DEPTH(FEET) =    0.20]
       0.93     0.60     0.02       0.038 OI      .       .       .       .
         [BASIN DEPTH(FEET) =    0.23]
       1.05     0.60     0.03       0.043 OI      .       .       .       .
         [BASIN DEPTH(FEET) =    0.27]
       1.17     0.60     0.03       0.049 OI      .       .       .       .
         [BASIN DEPTH(FEET) =    0.30]
       1.28     0.60     0.03       0.054 OI      .       .       .       .
         [BASIN DEPTH(FEET) =    0.34]
       1.40     0.70     0.04       0.061 OI      .       .       .       .
         [BASIN DEPTH(FEET) =    0.38]
       1.52     0.70     0.04       0.067 OI      .       .       .       .
         [BASIN DEPTH(FEET) =    0.42]
       1.63     0.70     0.05       0.073 OI      .       .       .       .
         [BASIN DEPTH(FEET) =    0.46]
       1.75     0.70     0.05       0.080 OI      .       .       .       .
         [BASIN DEPTH(FEET) =    0.50]
       1.87     0.80     0.05       0.087 OI      .       .       .       .
         [BASIN DEPTH(FEET) =    0.54]
       1.98     0.80     0.06       0.094 OI      .       .       .       .
         [BASIN DEPTH(FEET) =    0.58]
       2.10     0.80     0.06       0.101 OI      .       .       .       .
```

```
  [BASIN DEPTH(FEET) =    0.63]
2.22     0.80     0.07       0.108 OI      .       .       .       .
  [BASIN DEPTH(FEET) =    0.67]
2.33     0.90     0.07       0.116 OI      .       .       .       .
  [BASIN DEPTH(FEET) =    0.72]
2.45     0.90     0.08       0.124 OI      .       .       .       .
  [BASIN DEPTH(FEET) =    0.77]
2.57     1.00     0.08       0.133 OI      .       .       .       .
  [BASIN DEPTH(FEET) =    0.83]
2.68     1.00     0.09       0.142 OI      .       .       .       .
  [BASIN DEPTH(FEET) =    0.88]
2.80     1.10     0.09       0.152 OI      .       .       .       .
  [BASIN DEPTH(FEET) =    0.94]
2.92     1.10     0.10       0.161 OI      .       .       .       .
  [BASIN DEPTH(FEET) =    1.00]
3.03     1.20     0.19       0.172 O I     .       .       .       .
  [BASIN DEPTH(FEET) =    1.06]
3.15     1.20     0.27       0.181 O I     .       .       .       .
  [BASIN DEPTH(FEET) =    1.11]
3.27     1.40     0.36       0.191 O I     .       .       .       .
  [BASIN DEPTH(FEET) =    1.17]
3.38     1.50     0.45       0.202 O I     .       .       .       .
  [BASIN DEPTH(FEET) =    1.23]
3.50     1.70     0.55       0.214 O I     .       .       .       .
  [BASIN DEPTH(FEET) =    1.29]
3.62     1.80     0.64       0.225 .O I    .       .       .       .
  [BASIN DEPTH(FEET) =    1.36]
3.73     2.20     0.77       0.240 .O I    .       .       .       .
  [BASIN DEPTH(FEET) =    1.44]
3.85     2.50     0.90       0.256 .O  I   .       .       .       .
  [BASIN DEPTH(FEET) =    1.53]
3.97     3.70     1.12       0.282 .O    I .       .       .       .
  [BASIN DEPTH(FEET) =    1.67]
4.08     5.10     1.44       0.318 . O     I       .       .       .
  [BASIN DEPTH(FEET) =    1.87]
4.20    18.98    10.60       0.443 .       .       .O      .       I
  [BASIN DEPTH(FEET) =    2.51]
4.32     3.00     6.08       0.392 .    I  . O     .       .       .
  [BASIN DEPTH(FEET) =    2.25]
4.43     2.00     3.66       0.364 .  I  O .       .       .       .
  [BASIN DEPTH(FEET) =    2.12]
4.55     1.60     2.44       0.350 . I O   .       .       .       .
  [BASIN DEPTH(FEET) =    2.05]
4.67     1.30     1.76       0.343 . O     .       .       .       .
  [BASIN DEPTH(FEET) =    2.01]
4.78     1.10     1.59       0.337 .IO     .       .       .       .
  [BASIN DEPTH(FEET) =    1.98]
4.90     1.00     1.55       0.331 .IO     .       .       .       .
  [BASIN DEPTH(FEET) =    1.95]
5.02     0.90     1.50       0.325 .IO     .       .       .       .
  [BASIN DEPTH(FEET) =    1.91]
5.13     0.80     1.44       0.319 .IO     .       .       .       .
  [BASIN DEPTH(FEET) =    1.88]
5.25     0.80     1.39       0.313 .IO     .       .       .       .
  [BASIN DEPTH(FEET) =    1.85]
5.37     0.70     1.34       0.307 .IO     .       .       .       .
  [BASIN DEPTH(FEET) =    1.81]
5.48     0.70     1.29       0.301 .IO     .       .       .       .
  [BASIN DEPTH(FEET) =    1.78]
5.60     0.70     1.24       0.295 .IO     .       .       .       .
  [BASIN DEPTH(FEET) =    1.75]
5.72     0.60     1.19       0.289 .IO     .       .       .       .
  [BASIN DEPTH(FEET) =    1.71]
```

```
5.83     0.60     1.14       0.284 .O      .       .       .       .
  [BASIN DEPTH(FEET) =    1.68]
5.95     0.60     1.10       0.279 .O      .       .       .       .
  [BASIN DEPTH(FEET) =    1.66]
6.07     0.50     1.05       0.273 IO      .       .       .       .
  [BASIN DEPTH(FEET) =    1.62]
6.18     0.00     0.97       0.264 IO      .       .       .       .
  [BASIN DEPTH(FEET) =    1.57]
6.30     0.00     0.89       0.255 IO      .       .       .       .
  [BASIN DEPTH(FEET) =    1.52]
6.42     0.00     0.82       0.246 IO      .       .       .       .
  [BASIN DEPTH(FEET) =    1.47]
6.53     0.00     0.76       0.239 IO      .       .       .       .
  [BASIN DEPTH(FEET) =    1.43]
6.65     0.00     0.70       0.232 IO      .       .       .       .
  [BASIN DEPTH(FEET) =    1.39]
6.77     0.00     0.64       0.225 IO      .       .       .       .
  [BASIN DEPTH(FEET) =    1.36]
6.88     0.00     0.59       0.219 IO      .       .       .       .
  [BASIN DEPTH(FEET) =    1.32]
7.00     0.00     0.55       0.214 O       .       .       .       .
  [BASIN DEPTH(FEET) =    1.29]
7.12     0.00     0.50       0.209 O       .       .       .       .
  [BASIN DEPTH(FEET) =    1.26]
7.23     0.00     0.46       0.204 O       .       .       .       .
  [BASIN DEPTH(FEET) =    1.24]
7.35     0.00     0.43       0.200 O       .       .       .       .
  [BASIN DEPTH(FEET) =    1.21]
7.47     0.00     0.39       0.196 O       .       .       .       .
  [BASIN DEPTH(FEET) =    1.19]
7.58     0.00     0.36       0.192 O       .       .       .       .
  [BASIN DEPTH(FEET) =    1.17]
7.70     0.00     0.34       0.189 O       .       .       .       .
  [BASIN DEPTH(FEET) =    1.15]
7.82     0.00     0.31       0.186 O       .       .       .       .
  [BASIN DEPTH(FEET) =    1.14]
7.93     0.00     0.28       0.183 O       .       .       .       .
  [BASIN DEPTH(FEET) =    1.12]
8.05     0.00     0.26       0.180 O       .       .       .       .
  [BASIN DEPTH(FEET) =    1.11]
8.17     0.00     0.24       0.178 O       .       .       .       .
  [BASIN DEPTH(FEET) =    1.09]
8.28     0.00     0.22       0.175 O       .       .       .       .
  [BASIN DEPTH(FEET) =    1.08]
8.40     0.00     0.21       0.173 O       .       .       .       .
  [BASIN DEPTH(FEET) =    1.07]
8.52     0.00     0.19       0.171 O       .       .       .       .
  [BASIN DEPTH(FEET) =    1.06]
8.63     0.00     0.17       0.170 O       .       .       .       .
  [BASIN DEPTH(FEET) =    1.05]
8.75     0.00     0.16       0.168 O       .       .       .       .
  [BASIN DEPTH(FEET) =    1.04]
8.87     0.00     0.15       0.167 O       .       .       .       .
  [BASIN DEPTH(FEET) =    1.03]
8.98     0.00     0.14       0.165 O       .       .       .       .
  [BASIN DEPTH(FEET) =    1.02]
9.10     0.00     0.13       0.164 O       .       .       .       .
  [BASIN DEPTH(FEET) =    1.02]
9.22     0.00     0.12       0.163 O       .       .       .       .
  [BASIN DEPTH(FEET) =    1.01]
9.33     0.00     0.11       0.162 O       .       .       .       .
  [BASIN DEPTH(FEET) =    1.00]
9.45     0.00     0.10       0.161 O       .       .       .       .
```

```
   [BASIN DEPTH(FEET) =    1.00]
 9.57     0.00     0.10       0.160 O       .       .       .       .
   [BASIN DEPTH(FEET) =    0.99]
 9.68     0.00     0.10       0.159 O       .       .       .       .
   [BASIN DEPTH(FEET) =    0.99]
 9.80     0.00     0.10       0.158 O       .       .       .       .
   [BASIN DEPTH(FEET) =    0.98]
 9.92     0.00     0.10       0.157 O       .       .       .       .
   [BASIN DEPTH(FEET) =    0.97]
10.03     0.00     0.10       0.156 O       .       .       .       .
   [BASIN DEPTH(FEET) =    0.97]
10.15     0.00     0.10       0.155 O       .       .       .       .
   [BASIN DEPTH(FEET) =    0.96]
10.27     0.00     0.10       0.154 O       .       .       .       .
   [BASIN DEPTH(FEET) =    0.96]
10.38     0.00     0.10       0.153 O       .       .       .       .
   [BASIN DEPTH(FEET) =    0.95]
10.50     0.00     0.09       0.152 O       .       .       .       .
   [BASIN DEPTH(FEET) =    0.95]
10.62     0.00     0.09       0.151 O       .       .       .       .
   [BASIN DEPTH(FEET) =    0.94]
10.73     0.00     0.09       0.151 O       .       .       .       .
   [BASIN DEPTH(FEET) =    0.93]
10.85     0.00     0.09       0.150 O       .       .       .       .
   [BASIN DEPTH(FEET) =    0.93]
10.97     0.00     0.09       0.149 O       .       .       .       .
   [BASIN DEPTH(FEET) =    0.92]
11.08     0.00     0.09       0.148 O       .       .       .       .
   [BASIN DEPTH(FEET) =    0.92]
11.20     0.00     0.09       0.147 O       .       .       .       .
   [BASIN DEPTH(FEET) =    0.91]
11.32     0.00     0.09       0.146 O       .       .       .       .
   [BASIN DEPTH(FEET) =    0.91]
11.43     0.00     0.09       0.145 O       .       .       .       .
   [BASIN DEPTH(FEET) =    0.90]
11.55     0.00     0.09       0.144 O       .       .       .       .
   [BASIN DEPTH(FEET) =    0.90]
11.67     0.00     0.09       0.143 O       .       .       .       .
   [BASIN DEPTH(FEET) =    0.89]
```

DETENTION BASIN 3B
PROPOSED HYDROLOGY

RATIONAL METHOD HYDROGRAPH PROGRAM
COPYRIGHT 1992, 2001 RICK ENGINEERING COMPANY

RUN DATE 10/16/2015
HYDROGRAPH FILE NAME Text1
TIME OF CONCENTRATION 7 MIN.
6 HOUR RAINFALL 3.2 INCHES
BASIN AREA 10.9 ACRES
RUNOFF COEFFICIENT 0.71
PEAK DISCHARGE 45 CFS

TIME (MIN) = 0 DISCHARGE (CFS) = 0
TIME (MIN) = 7 DISCHARGE (CFS) = 1.5
TIME (MIN) = 14 DISCHARGE (CFS) = 1.5
TIME (MIN) = 21 DISCHARGE (CFS) = 1.5
TIME (MIN) = 28 DISCHARGE (CFS) = 1.6
TIME (MIN) = 35 DISCHARGE (CFS) = 1.6
TIME (MIN) = 42 DISCHARGE (CFS) = 1.6
TIME (MIN) = 49 DISCHARGE (CFS) = 1.7
TIME (MIN) = 56 DISCHARGE (CFS) = 1.7
TIME (MIN) = 63 DISCHARGE (CFS) = 1.8
TIME (MIN) = 70 DISCHARGE (CFS) = 1.8
TIME (MIN) = 77 DISCHARGE (CFS) = 1.9
TIME (MIN) = 84 DISCHARGE (CFS) = 1.9
TIME (MIN) = 91 DISCHARGE (CFS) = 2
TIME (MIN) = 98 DISCHARGE (CFS) = 2
TIME (MIN) = 105 DISCHARGE (CFS) = 2.1
TIME (MIN) = 112 DISCHARGE (CFS) = 2.1
TIME (MIN) = 119 DISCHARGE (CFS) = 2.3
TIME (MIN) = 126 DISCHARGE (CFS) = 2.3
TIME (MIN) = 133 DISCHARGE (CFS) = 2.4
TIME (MIN) = 140 DISCHARGE (CFS) = 2.5
TIME (MIN) = 147 DISCHARGE (CFS) = 2.7
TIME (MIN) = 154 DISCHARGE (CFS) = 2.7
TIME (MIN) = 161 DISCHARGE (CFS) = 2.9
TIME (MIN) = 168 DISCHARGE (CFS) = 3.1
TIME (MIN) = 175 DISCHARGE (CFS) = 3.3
TIME (MIN) = 182 DISCHARGE (CFS) = 3.5
TIME (MIN) = 189 DISCHARGE (CFS) = 3.9
TIME (MIN) = 196 DISCHARGE (CFS) = 4.1
TIME (MIN) = 203 DISCHARGE (CFS) = 4.7
TIME (MIN) = 210 DISCHARGE (CFS) = 5.1
TIME (MIN) = 217 DISCHARGE (CFS) = 6.2

TIME (MIN) = 224 DISCHARGE (CFS) = 7.1
TIME (MIN) = 231 DISCHARGE (CFS) = 10.4
TIME (MIN) = 238 DISCHARGE (CFS) = 22.2
TIME (MIN) = 245 DISCHARGE (CFS) = 45
TIME (MIN) = 252 DISCHARGE (CFS) = 8.3
TIME (MIN) = 259 DISCHARGE (CFS) = 5.6
TIME (MIN) = 266 DISCHARGE (CFS) = 4.4
TIME (MIN) = 273 DISCHARGE (CFS) = 3.7
TIME (MIN) = 280 DISCHARGE (CFS) = 3.2
TIME (MIN) = 287 DISCHARGE (CFS) = 2.8
TIME (MIN) = 294 DISCHARGE (CFS) = 2.6
TIME (MIN) = 301 DISCHARGE (CFS) = 2.4
TIME (MIN) = 308 DISCHARGE (CFS) = 2.2
TIME (MIN) = 315 DISCHARGE (CFS) = 2.1
TIME (MIN) = 322 DISCHARGE (CFS) = 1.9
TIME (MIN) = 329 DISCHARGE (CFS) = 1.8
TIME (MIN) = 336 DISCHARGE (CFS) = 1.7
TIME (MIN) = 343 DISCHARGE (CFS) = 1.7
TIME (MIN) = 350 DISCHARGE (CFS) = 1.6
TIME (MIN) = 357 DISCHARGE (CFS) = 1.5
TIME (MIN) = 364 DISCHARGE (CFS) = 0

```
****************************************************************************
                  HYDRAULICS ELEMENTS - II  PROGRAM PACKAGE

                   STORAGE BASIN HYDROGRAPH ROUTING MODEL
****************************************************************************
         (c) Copyright 1983-2014 Advanced Engineering Software (aes)
             Ver. 21.0  Release Date: 06/01/2014  License ID 1355

                          Analysis prepared by:

                            Fuscoe Engineering
                           6390 Greenwich Drive
                                Suite 170
                           San Diego, CA 92122

 ************************* DESCRIPTION OF STUDY *************************
* PROPOSED HYDROLOGY                                                     *
* DETENTION BASIN 3B AT NODE 305.5                                       *
* OCTOBER 2015                                                           *
 ************************************************************************

    FILE NAME: BASIN3B.DAT
    TIME/DATE OF STUDY: 15:19 10/16/2015
============================================================================
    ENTERED INFORMATION:
----------------------------------------------------------------------------
    TOTAL NUMBER OF INFLOW HYDROGRAPH INTERVALS =   53
    CONSTANT HYDROGRAPH TIME UNIT(MINUTES) =    7.000
    ASSUMED INITIAL DEPTH(FEET) IN STORAGE BASIN =    0.00
----------------------------------------------------------------------------
    ENTERED INFLOW HYDROGRAPH ORDINATES(CFS):
    *INTERVAL    FLOW   *INTERVAL    FLOW   *INTERVAL    FLOW   *
    * NUMBER     (CFS)  * NUMBER     (CFS)  * NUMBER     (CFS)  *
    *    1:        0.00*    2:        1.50*    3:        1.50*
    *    4:        1.50*    5:        1.60*    6:        1.60*
    *    7:        1.60*    8:        1.70*    9:        1.70*
    *   10:        1.80*   11:        1.80*   12:        1.90*
    *   13:        1.90*   14:        2.00*   15:        2.00*
    *   16:        2.10*   17:        2.10*   18:        2.30*
    *   19:        2.30*   20:        2.40*   21:        2.50*
    *   22:        2.70*   23:        2.70*   24:        2.90*
    *   25:        3.10*   26:        3.30*   27:        3.50*
    *   28:        3.90*   29:        4.10*   30:        4.70*
    *   31:        5.10*   32:        6.20*   33:        7.10*
    *   34:       10.40*   35:       22.20*   36:       45.00*
    *   37:        8.30*   38:        5.60*   39:        4.40*
    *   40:        3.70*   41:        3.20*   42:        2.80*
    *   43:        2.60*   44:        2.40*   45:        2.20*
    *   46:        2.10*   47:        1.90*   48:        1.80*
    *   49:        1.70*   50:        1.70*   51:        1.60*
    *   52:        1.50*   53:        0.00*
============================================================================
    DEPTH-VS.-STORAGE AND DEPTH-VS.-DISCHARGE INFORMATION:
----------------------------------------------------------------------------
    TOTAL NUMBER OF BASIN DEPTH INFORMATION ENTRIES =   5
----------------------------------------------------------------------------
    *BASIN-DEPTH  STORAGE    OUTFLOW  **BASIN-DEPTH  STORAGE    OUTFLOW  *
    *   (FEET)  (ACRE-FEET)   (CFS)   **   (FEET)  (ACRE-FEET)   (CFS)   *
    *     0.000      0.000     0.000**     1.000      0.166     0.050*
    *     3.000      0.567     0.150**     5.000      1.066     0.250*
    *     7.000      1.670    21.500**
****************************************************************************
```

```
-----------------------------------------------------------------------------
    INITIAL BASIN DEPTH(FEET) =    0.00
    INITIAL BASIN STORAGE(ACRE-FEET) =       0.00
    INITIAL BASIN OUTFLOW(CFS) =       0.00
-----------------------------------------------------------------------------
-----------------------------------------------------------------------------
    BASIN STORAGE, OUTFLOW AND DEPTH ROUTING VALUES:
     INTERVAL   {S-O*DT/2}   {S+O*DT/2}
      NUMBER   (ACRE-FEET) (ACRE-FEET)
          1      0.00000     0.00000
          2      0.16576     0.16624
          3      0.56628     0.56772
          4      1.06479     1.06721
          5      1.56635     1.77365
    WHERE S=STORAGE(AF);O=OUTFLOW(AF/MIN.);DT=UNIT(MIN.)
-----------------------------------------------------------------------------
```

```
         *UNIT-HYDROGRAPH STORAGE-BASIN ROUTING*
    NOTE: COMPUTED BASIN DEPTH, OUTFLOW, AND STORAGE QUANTITIES
          OCCUR AT THE GIVEN TIME. BASIN INFLOW VALUES REPRESENT THE
          AVERAGE INFLOW DURING THE RECENT HYDROGRAPH UNIT INTERVAL.

    GRAPH NOTATION: "I"=MEAN UNIT INFLOW; "O"=OUTFLOW AT GIVEN TIME
-----------------------------------------------------------------------------
     TIME   INFLOW  OUTFLOW    STORAGE
    (HOURS) (CFS)    (CFS)    (ACRE-FT)  0.     11.     22.     34.     45.
       0.12     0.00     0.00       0.000 O       .       .       .       .
         [BASIN DEPTH(FEET) =    0.00]
       0.23     1.50     0.00       0.014 OI      .       .       .       .
         [BASIN DEPTH(FEET) =    0.09]
       0.35     1.50     0.01       0.029 OI      .       .       .       .
         [BASIN DEPTH(FEET) =    0.17]
       0.47     1.50     0.01       0.043 OI      .       .       .       .
         [BASIN DEPTH(FEET) =    0.26]
       0.58     1.60     0.02       0.058 OI      .       .       .       .
         [BASIN DEPTH(FEET) =    0.35]
       0.70     1.60     0.02       0.074 OI      .       .       .       .
         [BASIN DEPTH(FEET) =    0.44]
       0.82     1.60     0.03       0.089 OI      .       .       .       .
         [BASIN DEPTH(FEET) =    0.54]
       0.93     1.70     0.03       0.105 OI      .       .       .       .
         [BASIN DEPTH(FEET) =    0.63]
       1.05     1.70     0.04       0.121 OI      .       .       .       .
         [BASIN DEPTH(FEET) =    0.73]
       1.17     1.80     0.04       0.138 OI      .       .       .       .
         [BASIN DEPTH(FEET) =    0.83]
       1.28     1.80     0.05       0.155 OI      .       .       .       .
         [BASIN DEPTH(FEET) =    0.93]
       1.40     1.90     0.05       0.173 OI      .       .       .       .
         [BASIN DEPTH(FEET) =    1.03]
       1.52     1.90     0.06       0.191 OI      .       .       .       .
         [BASIN DEPTH(FEET) =    1.12]
       1.63     2.00     0.06       0.209 OI      .       .       .       .
         [BASIN DEPTH(FEET) =    1.22]
       1.75     2.00     0.07       0.228 OI      .       .       .       .
         [BASIN DEPTH(FEET) =    1.31]
       1.87     2.10     0.07       0.248 OI      .       .       .       .
         [BASIN DEPTH(FEET) =    1.41]
       1.98     2.10     0.08       0.267 OI      .       .       .       .
```

```
  [BASIN DEPTH(FEET) =    1.50]
2.10     2.30     0.08       0.289 OI      .       .       .       .
  [BASIN DEPTH(FEET) =    1.61]
2.22     2.30     0.09       0.310 OI      .       .       .       .
  [BASIN DEPTH(FEET) =    1.72]
2.33     2.40     0.09       0.332 OI      .       .       .       .
  [BASIN DEPTH(FEET) =    1.83]
2.45     2.50     0.10       0.355 OI      .       .       .       .
  [BASIN DEPTH(FEET) =    1.94]
2.57     2.70     0.10       0.381 OI      .       .       .       .
  [BASIN DEPTH(FEET) =    2.07]
2.68     2.70     0.11       0.406 OI      .       .       .       .
  [BASIN DEPTH(FEET) =    2.19]
2.80     2.90     0.12       0.432 O I     .       .       .       .
  [BASIN DEPTH(FEET) =    2.33]
2.92     3.10     0.12       0.461 O I     .       .       .       .
  [BASIN DEPTH(FEET) =    2.47]
3.03     3.30     0.13       0.492 O I     .       .       .       .
  [BASIN DEPTH(FEET) =    2.62]
3.15     3.50     0.14       0.524 O I     .       .       .       .
  [BASIN DEPTH(FEET) =    2.79]
3.27     3.90     0.15       0.560 O I     .       .       .       .
  [BASIN DEPTH(FEET) =    2.97]
3.38     4.10     0.16       0.598 O I     .       .       .       .
  [BASIN DEPTH(FEET) =    3.13]
3.50     4.70     0.17       0.642 O  I    .       .       .       .
  [BASIN DEPTH(FEET) =    3.30]
3.62     5.10     0.17       0.690 O  I    .       .       .       .
  [BASIN DEPTH(FEET) =    3.49]
3.73     6.20     0.19       0.748 O   I   .       .       .       .
  [BASIN DEPTH(FEET) =    3.72]
3.85     7.10     0.20       0.814 O    I  .       .       .       .
  [BASIN DEPTH(FEET) =    3.99]
3.97    10.40     0.22       0.913 O      I.       .       .       .
  [BASIN DEPTH(FEET) =    4.39]
4.08    22.20     2.01       1.116 .O      .      I.       .       .
  [BASIN DEPTH(FEET) =    5.17]
4.20    45.00    14.48       1.470 .       . O     .       .       I
  [BASIN DEPTH(FEET) =    6.34]
4.32     8.30    12.69       1.419 .    I  .O      .       .       .
  [BASIN DEPTH(FEET) =    6.17]
4.43     5.60    10.63       1.361 .  I   O.       .       .       .
  [BASIN DEPTH(FEET) =    5.98]
4.55     4.40     8.82       1.310 .  I  O .       .       .       .
  [BASIN DEPTH(FEET) =    5.81]
4.67     3.70     7.34       1.267 . I  O  .       .       .       .
  [BASIN DEPTH(FEET) =    5.67]
4.78     3.20     6.14       1.233 . I O   .       .       .       .
  [BASIN DEPTH(FEET) =    5.55]
4.90     2.80     5.17       1.206 .I O    .       .       .       .
  [BASIN DEPTH(FEET) =    5.46]
5.02     2.60     4.42       1.185 .I O    .       .       .       .
  [BASIN DEPTH(FEET) =    5.39]
5.13     2.40     3.84       1.168 .IO     .       .       .       .
  [BASIN DEPTH(FEET) =    5.34]
5.25     2.20     3.36       1.154 .IO     .       .       .       .
  [BASIN DEPTH(FEET) =    5.29]
5.37     2.10     3.00       1.144 .IO     .       .       .       .
  [BASIN DEPTH(FEET) =    5.26]
5.48     1.90     2.68       1.135 .O      .       .       .       .
  [BASIN DEPTH(FEET) =    5.23]
5.60     1.80     2.42       1.128 .O      .       .       .       .
  [BASIN DEPTH(FEET) =    5.20]
```

```
                                    BASIN3B
5.72     1.70     2.21       1.122 .O      .       .       .       .
  [BASIN DEPTH(FEET) =    5.18]
5.83     1.70     2.06       1.118 .O      .       .       .       .
  [BASIN DEPTH(FEET) =    5.17]
5.95     1.60     1.93       1.114 .O      .       .       .       .
  [BASIN DEPTH(FEET) =    5.16]
6.07     1.50     1.81       1.110 .O      .       .       .       .
  [BASIN DEPTH(FEET) =    5.15]
6.18     0.00     1.28       1.095 O       .       .       .       .
  [BASIN DEPTH(FEET) =    5.10]
```

♀

BASIN 3C
PROPOSED HYDROLOGY

RATIONAL METHOD HYDROGRAPH PROGRAM
COPYRIGHT 1992, 2001 RICK ENGINEERING COMPANY

RUN DATE 10/16/2015
HYDROGRAPH FILE NAME Text1
TIME OF CONCENTRATION 5 MIN.
6 HOUR RAINFALL 3.2 INCHES
BASIN AREA 5.9 ACRES
RUNOFF COEFFICIENT 0.71
PEAK DISCHARGE 31.5 CFS

TIME (MIN) = 0 DISCHARGE (CFS) = 0
TIME (MIN) = 5 DISCHARGE (CFS) = 0.8
TIME (MIN) = 10 DISCHARGE (CFS) = 0.8
TIME (MIN) = 15 DISCHARGE (CFS) = 0.8
TIME (MIN) = 20 DISCHARGE (CFS) = 0.8
TIME (MIN) = 25 DISCHARGE (CFS) = 0.8
TIME (MIN) = 30 DISCHARGE (CFS) = 0.9
TIME (MIN) = 35 DISCHARGE (CFS) = 0.9
TIME (MIN) = 40 DISCHARGE (CFS) = 0.9
TIME (MIN) = 45 DISCHARGE (CFS) = 0.9
TIME (MIN) = 50 DISCHARGE (CFS) = 0.9
TIME (MIN) = 55 DISCHARGE (CFS) = 0.9
TIME (MIN) = 60 DISCHARGE (CFS) = 0.9
TIME (MIN) = 65 DISCHARGE (CFS) = 1
TIME (MIN) = 70 DISCHARGE (CFS) = 1
TIME (MIN) = 75 DISCHARGE (CFS) = 1
TIME (MIN) = 80 DISCHARGE (CFS) = 1
TIME (MIN) = 85 DISCHARGE (CFS) = 1
TIME (MIN) = 90 DISCHARGE (CFS) = 1.1
TIME (MIN) = 95 DISCHARGE (CFS) = 1.1
TIME (MIN) = 100 DISCHARGE (CFS) = 1.1
TIME (MIN) = 105 DISCHARGE (CFS) = 1.1
TIME (MIN) = 110 DISCHARGE (CFS) = 1.2
TIME (MIN) = 115 DISCHARGE (CFS) = 1.2
TIME (MIN) = 120 DISCHARGE (CFS) = 1.2
TIME (MIN) = 125 DISCHARGE (CFS) = 1.3
TIME (MIN) = 130 DISCHARGE (CFS) = 1.3
TIME (MIN) = 135 DISCHARGE (CFS) = 1.3
TIME (MIN) = 140 DISCHARGE (CFS) = 1.4
TIME (MIN) = 145 DISCHARGE (CFS) = 1.4
TIME (MIN) = 150 DISCHARGE (CFS) = 1.4
TIME (MIN) = 155 DISCHARGE (CFS) = 1.5

TIME (MIN) = 160 DISCHARGE (CFS) = 1.6
TIME (MIN) = 165 DISCHARGE (CFS) = 1.6
TIME (MIN) = 170 DISCHARGE (CFS) = 1.7
TIME (MIN) = 175 DISCHARGE (CFS) = 1.8
TIME (MIN) = 180 DISCHARGE (CFS) = 1.8
TIME (MIN) = 185 DISCHARGE (CFS) = 2
TIME (MIN) = 190 DISCHARGE (CFS) = 2.1
TIME (MIN) = 195 DISCHARGE (CFS) = 2.2
TIME (MIN) = 200 DISCHARGE (CFS) = 2.3
TIME (MIN) = 205 DISCHARGE (CFS) = 2.6
TIME (MIN) = 210 DISCHARGE (CFS) = 2.8
TIME (MIN) = 215 DISCHARGE (CFS) = 3.2
TIME (MIN) = 220 DISCHARGE (CFS) = 3.4
TIME (MIN) = 225 DISCHARGE (CFS) = 4.2
TIME (MIN) = 230 DISCHARGE (CFS) = 4.8
TIME (MIN) = 235 DISCHARGE (CFS) = 7
TIME (MIN) = 240 DISCHARGE (CFS) = 13.7
TIME (MIN) = 245 DISCHARGE (CFS) = 31.5
TIME (MIN) = 250 DISCHARGE (CFS) = 5.6
TIME (MIN) = 255 DISCHARGE (CFS) = 3.8
TIME (MIN) = 260 DISCHARGE (CFS) = 2.9
TIME (MIN) = 265 DISCHARGE (CFS) = 2.5
TIME (MIN) = 270 DISCHARGE (CFS) = 2.1
TIME (MIN) = 275 DISCHARGE (CFS) = 1.9
TIME (MIN) = 280 DISCHARGE (CFS) = 1.7
TIME (MIN) = 285 DISCHARGE (CFS) = 1.6
TIME (MIN) = 290 DISCHARGE (CFS) = 1.5
TIME (MIN) = 295 DISCHARGE (CFS) = 1.4
TIME (MIN) = 300 DISCHARGE (CFS) = 1.3
TIME (MIN) = 305 DISCHARGE (CFS) = 1.2
TIME (MIN) = 310 DISCHARGE (CFS) = 1.2
TIME (MIN) = 315 DISCHARGE (CFS) = 1.1
TIME (MIN) = 320 DISCHARGE (CFS) = 1.1
TIME (MIN) = 325 DISCHARGE (CFS) = 1
TIME (MIN) = 330 DISCHARGE (CFS) = 1
TIME (MIN) = 335 DISCHARGE (CFS) = 1
TIME (MIN) = 340 DISCHARGE (CFS) = 0.9
TIME (MIN) = 345 DISCHARGE (CFS) = 0.9
TIME (MIN) = 350 DISCHARGE (CFS) = 0.9
TIME (MIN) = 355 DISCHARGE (CFS) = 0.8
TIME (MIN) = 360 DISCHARGE (CFS) = 0.8
TIME (MIN) = 365 DISCHARGE (CFS) = 0

```
****************************************************************************
                  HYDRAULICS ELEMENTS - II  PROGRAM PACKAGE

                   STORAGE BASIN HYDROGRAPH ROUTING MODEL
****************************************************************************
         (c) Copyright 1983-2014 Advanced Engineering Software (aes)
             Ver. 21.0  Release Date: 06/01/2014  License ID 1355

                            Analysis prepared by:

                              Fuscoe Engineering
                             6390 Greenwich Drive
                                  Suite 170
                             San Diego, CA 92122

 ************************** DESCRIPTION OF STUDY **************************
* PROPOSED HYDR0LOGY                                                       *
* DETENTION BASIN 3C AT NODE 308                                           *
* OCTOBER 2015                                                             *
 ***************************************************************************

    FILE NAME: BASIN3C.DAT
    TIME/DATE OF STUDY: 15:34 10/16/2015
============================================================================
    ENTERED INFORMATION:
----------------------------------------------------------------------------
    TOTAL NUMBER OF INFLOW HYDROGRAPH INTERVALS =   74
    CONSTANT HYDROGRAPH TIME UNIT(MINUTES) =    5.000
    ASSUMED INITIAL DEPTH(FEET) IN STORAGE BASIN =    0.00
----------------------------------------------------------------------------
    ENTERED INFLOW HYDROGRAPH ORDINATES(CFS):
    *INTERVAL    FLOW   *INTERVAL    FLOW   *INTERVAL    FLOW   *
    * NUMBER     (CFS)  * NUMBER     (CFS)  * NUMBER     (CFS)  *
    *    1:         0.00*    2:         0.80*    3:         0.80*
    *    4:         0.80*    5:         0.80*    6:         0.80*
    *    7:         0.90*    8:         0.90*    9:         0.90*
    *   10:         0.90*   11:         0.90*   12:         0.90*
    *   13:         0.90*   14:         1.00*   15:         1.00*
    *   16:         1.00*   17:         1.00*   18:         1.00*
    *   19:         1.10*   20:         1.10*   21:         1.10*
    *   22:         1.10*   23:         1.20*   24:         1.20*
    *   25:         1.20*   26:         1.30*   27:         1.30*
    *   28:         1.30*   29:         1.40*   30:         1.40*
    *   31:         1.40*   32:         1.50*   33:         1.60*
    *   34:         1.60*   35:         1.70*   36:         1.80*
    *   37:         1.80*   38:         2.00*   39:         2.10*
    *   40:         2.20*   41:         2.30*   42:         2.60*
    *   43:         2.80*   44:         3.20*   45:         3.40*
    *   46:         4.20*   47:         4.80*   48:         7.00*
    *   49:        13.70*   50:        31.50*   51:         5.60*
    *   52:         3.80*   53:         2.90*   54:         2.50*
    *   55:         2.10*   56:         1.90*   57:         1.70*
    *   58:         1.60*   59:         1.50*   60:         1.40*
    *   61:         1.30*   62:         1.20*   63:         1.20*
    *   64:         1.10*   65:         1.10*   66:         1.00*
    *   67:         1.00*   68:         1.00*   69:         0.90*
    *   70:         0.90*   71:         0.90*   72:         0.80*
    *   73:         0.80*   74:         0.00*
============================================================================
    DEPTH-VS.-STORAGE AND DEPTH-VS.-DISCHARGE INFORMATION:
----------------------------------------------------------------------------
    TOTAL NUMBER OF BASIN DEPTH INFORMATION ENTRIES =   4
```

```
-----------------------------------------------------------------------------
    *BASIN-DEPTH  STORAGE    OUTFLOW  **BASIN-DEPTH  STORAGE    OUTFLOW  *
    *   (FEET)  (ACRE-FEET)   (CFS)   **   (FEET)  (ACRE-FEET)   (CFS)   *
    *      0.000      0.000      0.000**      1.000      0.178      0.050*
    *      3.000      0.611      0.130**      5.000      1.160     21.500*
*****************************************************************************
-----------------------------------------------------------------------------
    INITIAL BASIN DEPTH(FEET) =    0.00
    INITIAL BASIN STORAGE(ACRE-FEET) =       0.00
    INITIAL BASIN OUTFLOW(CFS) =       0.00
-----------------------------------------------------------------------------
-----------------------------------------------------------------------------
    BASIN STORAGE, OUTFLOW AND DEPTH ROUTING VALUES:
     INTERVAL   {S-O*DT/2}   {S+O*DT/2}
      NUMBER   (ACRE-FEET) (ACRE-FEET)
          1      0.00000     0.00000
          2      0.17783     0.17817
          3      0.61055     0.61145
          4      1.08596     1.23404
    WHERE S=STORAGE(AF);O=OUTFLOW(AF/MIN.);DT=UNIT(MIN.)
-----------------------------------------------------------------------------



         *UNIT-HYDROGRAPH STORAGE-BASIN ROUTING*
    NOTE: COMPUTED BASIN DEPTH, OUTFLOW, AND STORAGE QUANTITIES
          OCCUR AT THE GIVEN TIME. BASIN INFLOW VALUES REPRESENT THE
          AVERAGE INFLOW DURING THE RECENT HYDROGRAPH UNIT INTERVAL.

    GRAPH NOTATION: "I"=MEAN UNIT INFLOW; "O"=OUTFLOW AT GIVEN TIME
-----------------------------------------------------------------------------
     TIME   INFLOW  OUTFLOW    STORAGE
    (HOURS) (CFS)    (CFS)    (ACRE-FT)  0.      8.     16.     24.     32.
       0.08     0.00     0.00       0.000 O       .       .       .       .
         [BASIN DEPTH(FEET) =    0.00]
       0.17     0.80     0.00       0.006 O       .       .       .       .
         [BASIN DEPTH(FEET) =    0.03]
       0.25     0.80     0.00       0.011 O       .       .       .       .
         [BASIN DEPTH(FEET) =    0.06]
       0.33     0.80     0.00       0.016 O       .       .       .       .
         [BASIN DEPTH(FEET) =    0.09]
       0.42     0.80     0.01       0.022 O       .       .       .       .
         [BASIN DEPTH(FEET) =    0.12]
       0.50     0.80     0.01       0.027 O       .       .       .       .
         [BASIN DEPTH(FEET) =    0.15]
       0.58     0.90     0.01       0.034 O       .       .       .       .
         [BASIN DEPTH(FEET) =    0.19]
       0.67     0.90     0.01       0.040 O       .       .       .       .
         [BASIN DEPTH(FEET) =    0.22]
       0.75     0.90     0.01       0.046 O       .       .       .       .
         [BASIN DEPTH(FEET) =    0.26]
       0.83     0.90     0.01       0.052 O       .       .       .       .
         [BASIN DEPTH(FEET) =    0.29]
       0.92     0.90     0.02       0.058 O       .       .       .       .
         [BASIN DEPTH(FEET) =    0.33]
       1.00     0.90     0.02       0.064 O       .       .       .       .
         [BASIN DEPTH(FEET) =    0.36]
       1.08     0.90     0.02       0.070 O       .       .       .       .
         [BASIN DEPTH(FEET) =    0.39]
       1.17     1.00     0.02       0.077 OI      .       .       .       .
         [BASIN DEPTH(FEET) =    0.43]
```

```
1.25     1.00     0.02       0.084 OI      .       .       .       .
  [BASIN DEPTH(FEET) =    0.47]
1.33     1.00     0.03       0.090 OI      .       .       .       .
  [BASIN DEPTH(FEET) =    0.51]
1.42     1.00     0.03       0.097 OI      .       .       .       .
  [BASIN DEPTH(FEET) =    0.55]
1.50     1.00     0.03       0.104 OI      .       .       .       .
  [BASIN DEPTH(FEET) =    0.58]
1.58     1.10     0.03       0.111 OI      .       .       .       .
  [BASIN DEPTH(FEET) =    0.62]
1.67     1.10     0.03       0.118 OI      .       .       .       .
  [BASIN DEPTH(FEET) =    0.67]
1.75     1.10     0.04       0.126 OI      .       .       .       .
  [BASIN DEPTH(FEET) =    0.71]
1.83     1.10     0.04       0.133 OI      .       .       .       .
  [BASIN DEPTH(FEET) =    0.75]
1.92     1.20     0.04       0.141 OI      .       .       .       .
  [BASIN DEPTH(FEET) =    0.79]
2.00     1.20     0.04       0.149 OI      .       .       .       .
  [BASIN DEPTH(FEET) =    0.84]
2.08     1.20     0.04       0.157 OI      .       .       .       .
  [BASIN DEPTH(FEET) =    0.88]
2.17     1.30     0.05       0.166 OI      .       .       .       .
  [BASIN DEPTH(FEET) =    0.93]
2.25     1.30     0.05       0.174 OI      .       .       .       .
  [BASIN DEPTH(FEET) =    0.98]
2.33     1.30     0.05       0.183 OI      .       .       .       .
  [BASIN DEPTH(FEET) =    1.02]
2.42     1.40     0.05       0.192 OI      .       .       .       .
  [BASIN DEPTH(FEET) =    1.07]
2.50     1.40     0.05       0.202 OI      .       .       .       .
  [BASIN DEPTH(FEET) =    1.11]
2.58     1.40     0.06       0.211 OI      .       .       .       .
  [BASIN DEPTH(FEET) =    1.15]
2.67     1.50     0.06       0.221 OI      .       .       .       .
  [BASIN DEPTH(FEET) =    1.20]
2.75     1.60     0.06       0.231 OI      .       .       .       .
  [BASIN DEPTH(FEET) =    1.25]
2.83     1.60     0.06       0.242 OI      .       .       .       .
  [BASIN DEPTH(FEET) =    1.30]
2.92     1.70     0.06       0.253 OI      .       .       .       .
  [BASIN DEPTH(FEET) =    1.35]
3.00     1.80     0.07       0.265 OI      .       .       .       .
  [BASIN DEPTH(FEET) =    1.40]
3.08     1.80     0.07       0.277 OI      .       .       .       .
  [BASIN DEPTH(FEET) =    1.46]
3.17     2.00     0.07       0.290 O I     .       .       .       .
  [BASIN DEPTH(FEET) =    1.52]
3.25     2.10     0.07       0.304 O I     .       .       .       .
  [BASIN DEPTH(FEET) =    1.58]
3.33     2.20     0.08       0.319 O I     .       .       .       .
  [BASIN DEPTH(FEET) =    1.65]
3.42     2.30     0.08       0.334 O I     .       .       .       .
  [BASIN DEPTH(FEET) =    1.72]
3.50     2.60     0.08       0.352 O I     .       .       .       .
  [BASIN DEPTH(FEET) =    1.80]
3.58     2.80     0.09       0.370 O I     .       .       .       .
  [BASIN DEPTH(FEET) =    1.89]
3.67     3.20     0.09       0.392 O  I    .       .       .       .
  [BASIN DEPTH(FEET) =    1.99]
3.75     3.40     0.09       0.415 O  I    .       .       .       .
  [BASIN DEPTH(FEET) =    2.09]
3.83     4.20     0.10       0.443 O   I   .       .       .       .
```

```
  [BASIN DEPTH(FEET) =    2.22]
3.92     4.80     0.10       0.475 O   I   .       .       .       .
  [BASIN DEPTH(FEET) =    2.37]
4.00     7.00     0.11       0.523 O      I.       .       .       .
  [BASIN DEPTH(FEET) =    2.59]
4.08    13.70     0.31       0.616 O       .    I  .       .       .
  [BASIN DEPTH(FEET) =    3.02]
4.17    31.50     7.68       0.805 .      O.       .       .       I
  [BASIN DEPTH(FEET) =    3.71]
4.25     5.60     7.19       0.792 .    I O.       .       .       .
  [BASIN DEPTH(FEET) =    3.66]
4.33     3.80     6.39       0.772 .  I  O .       .       .       .
  [BASIN DEPTH(FEET) =    3.59]
4.42     2.90     5.56       0.751 . I  O  .       .       .       .
  [BASIN DEPTH(FEET) =    3.51]
4.50     2.50     4.84       0.732 . I O   .       .       .       .
  [BASIN DEPTH(FEET) =    3.44]
4.58     2.10     4.19       0.715 . I O   .       .       .       .
  [BASIN DEPTH(FEET) =    3.38]
4.67     1.90     3.65       0.701 .I O    .       .       .       .
  [BASIN DEPTH(FEET) =    3.33]
4.75     1.70     3.19       0.690 .I O    .       .       .       .
  [BASIN DEPTH(FEET) =    3.29]
4.83     1.60     2.81       0.680 .IO     .       .       .       .
  [BASIN DEPTH(FEET) =    3.25]
4.92     1.50     2.50       0.672 .IO     .       .       .       .
  [BASIN DEPTH(FEET) =    3.22]
5.00     1.40     2.24       0.665 .IO     .       .       .       .
  [BASIN DEPTH(FEET) =    3.20]
5.08     1.30     2.02       0.660 .IO     .       .       .       .
  [BASIN DEPTH(FEET) =    3.18]
5.17     1.20     1.83       0.655 .O      .       .       .       .
  [BASIN DEPTH(FEET) =    3.16]
5.25     1.20     1.68       0.651 .O      .       .       .       .
  [BASIN DEPTH(FEET) =    3.14]
5.33     1.10     1.54       0.647 .O      .       .       .       .
  [BASIN DEPTH(FEET) =    3.13]
5.42     1.10     1.44       0.645 .O      .       .       .       .
  [BASIN DEPTH(FEET) =    3.12]
5.50     1.00     1.33       0.642 .O      .       .       .       .
  [BASIN DEPTH(FEET) =    3.11]
5.58     1.00     1.25       0.640 .O      .       .       .       .
  [BASIN DEPTH(FEET) =    3.11]
5.67     1.00     1.19       0.638 .O      .       .       .       .
  [BASIN DEPTH(FEET) =    3.10]
5.75     0.90     1.12       0.637 IO      .       .       .       .
  [BASIN DEPTH(FEET) =    3.09]
5.83     0.90     1.07       0.635 IO      .       .       .       .
  [BASIN DEPTH(FEET) =    3.09]
5.92     0.90     1.03       0.634 IO      .       .       .       .
  [BASIN DEPTH(FEET) =    3.08]
6.00     0.80     0.98       0.633 O       .       .       .       .
  [BASIN DEPTH(FEET) =    3.08]
6.08     0.80     0.93       0.632 O       .       .       .       .
  [BASIN DEPTH(FEET) =    3.08]
6.17     0.00     0.71       0.626 O       .       .       .       .
  [BASIN DEPTH(FEET) =    3.05]
```

♀

BASIN 3D
PROPOSED HYDROLOGY

RATIONAL METHOD HYDROGRAPH PROGRAM
COPYRIGHT 1992, 2001 RICK ENGINEERING COMPANY

RUN DATE 10/16/2015
HYDROGRAPH FILE NAME Text1
TIME OF CONCENTRATION 7 MIN.
6 HOUR RAINFALL 3.2 INCHES
BASIN AREA 14.9 ACRES
RUNOFF COEFFICIENT 0.71
PEAK DISCHARGE 67.8 CFS

TIME (MIN) = 0 DISCHARGE (CFS) = 0
TIME (MIN) = 7 DISCHARGE (CFS) = 2
TIME (MIN) = 14 DISCHARGE (CFS) = 2.1
TIME (MIN) = 21 DISCHARGE (CFS) = 2.1
TIME (MIN) = 28 DISCHARGE (CFS) = 2.1
TIME (MIN) = 35 DISCHARGE (CFS) = 2.2
TIME (MIN) = 42 DISCHARGE (CFS) = 2.2
TIME (MIN) = 49 DISCHARGE (CFS) = 2.3
TIME (MIN) = 56 DISCHARGE (CFS) = 2.3
TIME (MIN) = 63 DISCHARGE (CFS) = 2.4
TIME (MIN) = 70 DISCHARGE (CFS) = 2.5
TIME (MIN) = 77 DISCHARGE (CFS) = 2.5
TIME (MIN) = 84 DISCHARGE (CFS) = 2.6
TIME (MIN) = 91 DISCHARGE (CFS) = 2.7
TIME (MIN) = 98 DISCHARGE (CFS) = 2.8
TIME (MIN) = 105 DISCHARGE (CFS) = 2.9
TIME (MIN) = 112 DISCHARGE (CFS) = 2.9
TIME (MIN) = 119 DISCHARGE (CFS) = 3.1
TIME (MIN) = 126 DISCHARGE (CFS) = 3.2
TIME (MIN) = 133 DISCHARGE (CFS) = 3.3
TIME (MIN) = 140 DISCHARGE (CFS) = 3.4
TIME (MIN) = 147 DISCHARGE (CFS) = 3.6
TIME (MIN) = 154 DISCHARGE (CFS) = 3.8
TIME (MIN) = 161 DISCHARGE (CFS) = 4
TIME (MIN) = 168 DISCHARGE (CFS) = 4.2
TIME (MIN) = 175 DISCHARGE (CFS) = 4.5
TIME (MIN) = 182 DISCHARGE (CFS) = 4.8

TIME (MIN) = 189 DISCHARGE (CFS) = 5.3
TIME (MIN) = 196 DISCHARGE (CFS) = 5.6
TIME (MIN) = 203 DISCHARGE (CFS) = 6.4
TIME (MIN) = 210 DISCHARGE (CFS) = 7
TIME (MIN) = 217 DISCHARGE (CFS) = 8.5
TIME (MIN) = 224 DISCHARGE (CFS) = 9.7
TIME (MIN) = 231 DISCHARGE (CFS) = 14.2
TIME (MIN) = 238 DISCHARGE (CFS) = 24
TIME (MIN) = 245 DISCHARGE (CFS) = 67.8
TIME (MIN) = 252 DISCHARGE (CFS) = 11.4
TIME (MIN) = 259 DISCHARGE (CFS) = 7.6
TIME (MIN) = 266 DISCHARGE (CFS) = 6
TIME (MIN) = 273 DISCHARGE (CFS) = 5
TIME (MIN) = 280 DISCHARGE (CFS) = 4.4
TIME (MIN) = 287 DISCHARGE (CFS) = 3.9
TIME (MIN) = 294 DISCHARGE (CFS) = 3.5
TIME (MIN) = 301 DISCHARGE (CFS) = 3.2
TIME (MIN) = 308 DISCHARGE (CFS) = 3
TIME (MIN) = 315 DISCHARGE (CFS) = 2.8
TIME (MIN) = 322 DISCHARGE (CFS) = 2.6
TIME (MIN) = 329 DISCHARGE (CFS) = 2.5
TIME (MIN) = 336 DISCHARGE (CFS) = 2.4
TIME (MIN) = 343 DISCHARGE (CFS) = 2.3
TIME (MIN) = 350 DISCHARGE (CFS) = 2.2
TIME (MIN) = 357 DISCHARGE (CFS) = 2.1
TIME (MIN) = 364 DISCHARGE (CFS) = 0

```
****************************************************************************
                  HYDRAULICS ELEMENTS - II  PROGRAM PACKAGE

                   STORAGE BASIN HYDROGRAPH ROUTING MODEL
****************************************************************************
         (c) Copyright 1983-2014 Advanced Engineering Software (aes)
             Ver. 21.0  Release Date: 06/01/2014  License ID 1355

                            Analysis prepared by:

                             Fuscoe Engineering
                            6390 Greenwich Drive
                                 Suite 170
                            San Diego, CA 92122

 ************************* DESCRIPTION OF STUDY *************************
* PROPOSED HYDROLOGY                                                     *
* DETENTION BSIN 3D AT NODE 3005                                         *
* OCTOBER 2015                                                           *
 ************************************************************************

    FILE NAME: BASIN3D.DAT
    TIME/DATE OF STUDY: 15:47 10/16/2015
============================================================================
    ENTERED INFORMATION:
----------------------------------------------------------------------------
    TOTAL NUMBER OF INFLOW HYDROGRAPH INTERVALS =   53
    CONSTANT HYDROGRAPH TIME UNIT(MINUTES) =    7.000
    ASSUMED INITIAL DEPTH(FEET) IN STORAGE BASIN =    0.00
----------------------------------------------------------------------------
    ENTERED INFLOW HYDROGRAPH ORDINATES(CFS):
    *INTERVAL    FLOW   *INTERVAL    FLOW   *INTERVAL    FLOW   *
    * NUMBER     (CFS)  * NUMBER     (CFS)  * NUMBER     (CFS)  *
    *    1:        0.00*    2:        2.00*    3:        2.10*
    *    4:        2.10*    5:        2.10*    6:        2.20*
    *    7:        2.20*    8:        2.30*    9:        2.30*
    *   10:        2.40*   11:        2.50*   12:        2.50*
    *   13:        2.60*   14:        2.70*   15:        2.80*
    *   16:        2.90*   17:        2.90*   18:        3.10*
    *   19:        3.20*   20:        3.30*   21:        3.40*
    *   22:        3.60*   23:        3.80*   24:        4.00*
    *   25:        4.20*   26:        4.50*   27:        4.80*
    *   28:        5.30*   29:        5.60*   30:        6.40*
    *   31:        7.00*   32:        8.50*   33:        9.70*
    *   34:       14.20*   35:       24.00*   36:       67.80*
    *   37:       11.40*   38:        7.60*   39:        6.00*
    *   40:        5.00*   41:        4.40*   42:        3.90*
    *   43:        3.50*   44:        3.20*   45:        3.00*
    *   46:        2.80*   47:        2.60*   48:        2.50*
    *   49:        2.40*   50:        2.30*   51:        2.20*
    *   52:        2.10*   53:        0.00*
============================================================================
    DEPTH-VS.-STORAGE AND DEPTH-VS.-DISCHARGE INFORMATION:
----------------------------------------------------------------------------
    TOTAL NUMBER OF BASIN DEPTH INFORMATION ENTRIES =   4
----------------------------------------------------------------------------
    *BASIN-DEPTH  STORAGE    OUTFLOW  **BASIN-DEPTH  STORAGE    OUTFLOW  *
    *   (FEET)  (ACRE-FEET)   (CFS)   **   (FEET)  (ACRE-FEET)   (CFS)   *
    *     0.000      0.000     0.000**     2.000      1.190      0.150*
    *     3.000      1.862     0.250**     5.000      3.368     21.500*
****************************************************************************
----------------------------------------------------------------------------
```

```
                                        BASIN3D
    INITIAL BASIN DEPTH(FEET) =    0.00
    INITIAL BASIN STORAGE(ACRE-FEET) =       0.00
    INITIAL BASIN OUTFLOW(CFS) =       0.00
-------------------------------------------------------------------------
-------------------------------------------------------------------------
    BASIN STORAGE, OUTFLOW AND DEPTH ROUTING VALUES:
     INTERVAL   {S-O*DT/2}   {S+O*DT/2}
      NUMBER   (ACRE-FEET) (ACRE-FEET)
          1      0.00000     0.00000
          2      1.18928     1.19072
          3      1.86079     1.86321
          4      3.26435     3.47165
    WHERE S=STORAGE(AF);O=OUTFLOW(AF/MIN.);DT=UNIT(MIN.)
-------------------------------------------------------------------------



         *UNIT-HYDROGRAPH STORAGE-BASIN ROUTING*
    NOTE: COMPUTED BASIN DEPTH, OUTFLOW, AND STORAGE QUANTITIES
          OCCUR AT THE GIVEN TIME. BASIN INFLOW VALUES REPRESENT THE
          AVERAGE INFLOW DURING THE RECENT HYDROGRAPH UNIT INTERVAL.

    GRAPH NOTATION: "I"=MEAN UNIT INFLOW; "O"=OUTFLOW AT GIVEN TIME
-------------------------------------------------------------------------
     TIME   INFLOW  OUTFLOW    STORAGE
    (HOURS) (CFS)    (CFS)    (ACRE-FT)  0.     17.     34.     51.     68.
       0.12     0.00     0.00       0.000 O       .       .       .       .
         [BASIN DEPTH(FEET) =    0.00]
       0.23     2.00     0.00       0.019 O       .       .       .       .
         [BASIN DEPTH(FEET) =    0.03]
       0.35     2.10     0.00       0.039 O       .       .       .       .
         [BASIN DEPTH(FEET) =    0.07]
       0.47     2.10     0.01       0.060 O       .       .       .       .
         [BASIN DEPTH(FEET) =    0.10]
       0.58     2.10     0.01       0.080 O       .       .       .       .
         [BASIN DEPTH(FEET) =    0.13]
       0.70     2.20     0.01       0.101 OI      .       .       .       .
         [BASIN DEPTH(FEET) =    0.17]
       0.82     2.20     0.02       0.122 OI      .       .       .       .
         [BASIN DEPTH(FEET) =    0.21]
       0.93     2.30     0.02       0.144 OI      .       .       .       .
         [BASIN DEPTH(FEET) =    0.24]
       1.05     2.30     0.02       0.166 OI      .       .       .       .
         [BASIN DEPTH(FEET) =    0.28]
       1.17     2.40     0.02       0.189 OI      .       .       .       .
         [BASIN DEPTH(FEET) =    0.32]
       1.28     2.50     0.03       0.213 OI      .       .       .       .
         [BASIN DEPTH(FEET) =    0.36]
       1.40     2.50     0.03       0.237 OI      .       .       .       .
         [BASIN DEPTH(FEET) =    0.40]
       1.52     2.60     0.03       0.261 OI      .       .       .       .
         [BASIN DEPTH(FEET) =    0.44]
       1.63     2.70     0.04       0.287 OI      .       .       .       .
         [BASIN DEPTH(FEET) =    0.48]
       1.75     2.80     0.04       0.314 OI      .       .       .       .
         [BASIN DEPTH(FEET) =    0.53]
       1.87     2.90     0.04       0.341 OI      .       .       .       .
         [BASIN DEPTH(FEET) =    0.57]
       1.98     2.90     0.05       0.369 OI      .       .       .       .
         [BASIN DEPTH(FEET) =    0.62]
       2.10     3.10     0.05       0.398 OI      .       .       .       .
```

```
  [BASIN DEPTH(FEET) =    0.67]
2.22     3.20     0.05       0.429 OI      .       .       .       .
  [BASIN DEPTH(FEET) =    0.72]
2.33     3.30     0.06       0.460 OI      .       .       .       .
  [BASIN DEPTH(FEET) =    0.77]
2.45     3.40     0.06       0.492 OI      .       .       .       .
  [BASIN DEPTH(FEET) =    0.83]
2.57     3.60     0.07       0.526 OI      .       .       .       .
  [BASIN DEPTH(FEET) =    0.88]
2.68     3.80     0.07       0.562 OI      .       .       .       .
  [BASIN DEPTH(FEET) =    0.94]
2.80     4.00     0.08       0.600 OI      .       .       .       .
  [BASIN DEPTH(FEET) =    1.01]
2.92     4.20     0.08       0.640 OI      .       .       .       .
  [BASIN DEPTH(FEET) =    1.08]
3.03     4.50     0.09       0.682 O I     .       .       .       .
  [BASIN DEPTH(FEET) =    1.15]
3.15     4.80     0.09       0.728 O I     .       .       .       .
  [BASIN DEPTH(FEET) =    1.22]
3.27     5.30     0.10       0.778 O I     .       .       .       .
  [BASIN DEPTH(FEET) =    1.31]
3.38     5.60     0.10       0.831 O I     .       .       .       .
  [BASIN DEPTH(FEET) =    1.40]
3.50     6.40     0.11       0.892 O  I    .       .       .       .
  [BASIN DEPTH(FEET) =    1.50]
3.62     7.00     0.12       0.958 O  I    .       .       .       .
  [BASIN DEPTH(FEET) =    1.61]
3.73     8.50     0.13       1.039 O   I   .       .       .       .
  [BASIN DEPTH(FEET) =    1.75]
3.85     9.70     0.14       1.131 O   I   .       .       .       .
  [BASIN DEPTH(FEET) =    1.90]
3.97    14.20     0.16       1.266 O     I .       .       .       .
  [BASIN DEPTH(FEET) =    2.11]
4.08    24.00     0.20       1.496 O       .  I    .       .       .
  [BASIN DEPTH(FEET) =    2.46]
4.20    67.80     4.02       2.129 .O      .       .       .       I
  [BASIN DEPTH(FEET) =    3.36]
4.32    11.40     4.96       2.196 . O  I  .       .       .       .
  [BASIN DEPTH(FEET) =    3.44]
4.43     7.60     5.30       2.220 . OI    .       .       .       .
  [BASIN DEPTH(FEET) =    3.48]
4.55     6.00     5.39       2.226 . O     .       .       .       .
  [BASIN DEPTH(FEET) =    3.48]
4.67     5.00     5.34       2.223 . O     .       .       .       .
  [BASIN DEPTH(FEET) =    3.48]
4.78     4.40     5.22       2.214 . O     .       .       .       .
  [BASIN DEPTH(FEET) =    3.47]
4.90     3.90     5.05       2.202 .IO     .       .       .       .
  [BASIN DEPTH(FEET) =    3.45]
5.02     3.50     4.85       2.188 .IO     .       .       .       .
  [BASIN DEPTH(FEET) =    3.43]
5.13     3.20     4.64       2.173 .IO     .       .       .       .
  [BASIN DEPTH(FEET) =    3.41]
5.25     3.00     4.43       2.159 .IO     .       .       .       .
  [BASIN DEPTH(FEET) =    3.39]
5.37     2.80     4.23       2.144 .O      .       .       .       .
  [BASIN DEPTH(FEET) =    3.37]
5.48     2.60     4.02       2.129 .O      .       .       .       .
  [BASIN DEPTH(FEET) =    3.35]
5.60     2.50     3.83       2.115 .O      .       .       .       .
  [BASIN DEPTH(FEET) =    3.34]
5.72     2.40     3.64       2.103 .O      .       .       .       .
  [BASIN DEPTH(FEET) =    3.32]
```

```
                                    BASIN3D
5.83     2.30     3.47       2.090 .O      .       .       .       .
  [BASIN DEPTH(FEET) =    3.30]
5.95     2.20     3.31       2.079 .O      .       .       .       .
  [BASIN DEPTH(FEET) =    3.29]
6.07     2.10     3.16       2.068 IO      .       .       .       .
  [BASIN DEPTH(FEET) =    3.27]
6.18     0.00     2.75       2.039 IO      .       .       .       .
  [BASIN DEPTH(FEET) =    3.24]
```

♀

DETENTION BASIN 4A
PROPOSED HYDROLOGY

RATIONAL METHOD HYDROGRAPH PROGRAM
COPYRIGHT 1992, 2001 RICK ENGINEERING COMPANY
RUN DATE 10/23/2014

TIME OF CONCENTRATION 8 MIN.
6 HOUR RAINFALL 3.2 INCHES
BASIN AREA 6.2 ACRES
RUNOFF COEFFICIENT 0.71
PEAK DISCHARGE 30.14 CFS

47 INTERVALS
TIME (MIN) = 0 DISCHARGE (CFS) = 0
TIME (MIN) = 8 DISCHARGE (CFS) = 0.8
TIME (MIN) = 16 DISCHARGE (CFS) = 0.9
TIME (MIN) = 24 DISCHARGE (CFS) = 0.9
TIME (MIN) = 32 DISCHARGE (CFS) = 0.9
TIME (MIN) = 40 DISCHARGE (CFS) = 0.9
TIME (MIN) = 48 DISCHARGE (CFS) = 0.9
TIME (MIN) = 56 DISCHARGE (CFS) = 1
TIME (MIN) = 64 DISCHARGE (CFS) = 1
TIME (MIN) = 72 DISCHARGE (CFS) = 1
TIME (MIN) = 80 DISCHARGE (CFS) = 1.1
TIME (MIN) = 88 DISCHARGE (CFS) = 1.1
TIME (MIN) = 96 DISCHARGE (CFS) = 1.1
TIME (MIN) = 104 DISCHARGE (CFS) = 1.2
TIME (MIN) = 112 DISCHARGE (CFS) = 1.2
TIME (MIN) = 120 DISCHARGE (CFS) = 1.3
TIME (MIN) = 128 DISCHARGE (CFS) = 1.3
TIME (MIN) = 136 DISCHARGE (CFS) = 1.4
TIME (MIN) = 144 DISCHARGE (CFS) = 1.4
TIME (MIN) = 152 DISCHARGE (CFS) = 1.5
TIME (MIN) = 160 DISCHARGE (CFS) = 1.6
TIME (MIN) = 168 DISCHARGE (CFS) = 1.7
TIME (MIN) = 176 DISCHARGE (CFS) = 1.8
TIME (MIN) = 184 DISCHARGE (CFS) = 2
TIME (MIN) = 192 DISCHARGE (CFS) = 2.1
TIME (MIN) = 200 DISCHARGE (CFS) = 2.4
TIME (MIN) = 208 DISCHARGE (CFS) = 2.7
TIME (MIN) = 216 DISCHARGE (CFS) = 3.2
TIME (MIN) = 224 DISCHARGE (CFS) = 3.7
TIME (MIN) = 232 DISCHARGE (CFS) = 5.4
TIME (MIN) = 240 DISCHARGE (CFS) = 4.9
TIME (MIN) = 248 DISCHARGE (CFS) = 30.14

TIME (MIN) = 256 DISCHARGE (CFS) = 4.4
TIME (MIN) = 264 DISCHARGE (CFS) = 2.9
TIME (MIN) = 272 DISCHARGE (CFS) = 2.3
TIME (MIN) = 280 DISCHARGE (CFS) = 1.9
TIME (MIN) = 288 DISCHARGE (CFS) = 1.7
TIME (MIN) = 296 DISCHARGE (CFS) = 1.5
TIME (MIN) = 304 DISCHARGE (CFS) = 1.3
TIME (MIN) = 312 DISCHARGE (CFS) = 1.2
TIME (MIN) = 320 DISCHARGE (CFS) = 1.1
TIME (MIN) = 328 DISCHARGE (CFS) = 1.1
TIME (MIN) = 336 DISCHARGE (CFS) = 1
TIME (MIN) = 344 DISCHARGE (CFS) = 1
TIME (MIN) = 352 DISCHARGE (CFS) = 0.9
TIME (MIN) = 360 DISCHARGE (CFS) = 0.9
TIME (MIN) = 368 DISCHARGE (CFS) = 0

```
==============================================================================
******************************************************************************
                  HYDRAULICS ELEMENTS - II  PROGRAM PACKAGE

                   STORAGE BASIN HYDROGRAPH ROUTING MODEL
******************************************************************************
         (c) Copyright 1983-2012 Advanced Engineering Software (aes)
             Ver. 19.0  Release Date: 06/01/2012  License ID 1355

                            Analysis prepared by:

                              Fuscoe Engineering
                              6390 Greenwich Dr.
                                  Suite 170
                             San Diego, CA 92122

 ************************** DESCRIPTION OF STUDY **************************
* PROPOSED HYDROLOGY                                                         *
* DETENTION BASIN 4A AT NODE 416                                             *
* OCTOBER 2014                                                               *
 ******************************************************************************

    FILE NAME: BASIN4A.DAT
    TIME/DATE OF STUDY: 11:41 10/23/2014
==============================================================================
    ENTERED INFORMATION:
------------------------------------------------------------------------------
    TOTAL NUMBER OF INFLOW HYDROGRAPH INTERVALS =   47
    CONSTANT HYDROGRAPH TIME UNIT(MINUTES) =    8.000
    ASSUMED INITIAL DEPTH(FEET) IN STORAGE BASIN =    0.00
------------------------------------------------------------------------------
    ENTERED INFLOW HYDROGRAPH ORDINATES(CFS):
    *INTERVAL    FLOW   *INTERVAL    FLOW   *INTERVAL    FLOW   *
    * NUMBER     (CFS)  * NUMBER     (CFS)  * NUMBER     (CFS)  *
    *    1:         0.00*    2:         0.80*    3:         0.90*
    *    4:         0.90*    5:         0.90*    6:         0.90*
    *    7:         0.90*    8:         1.00*    9:         1.00*
    *   10:         1.00*   11:         1.10*   12:         1.10*
    *   13:         1.10*   14:         1.20*   15:         1.20*
    *   16:         1.30*   17:         1.30*   18:         1.40*
    *   19:         1.40*   20:         1.50*   21:         1.60*
    *   22:         1.70*   23:         1.80*   24:         2.00*
    *   25:         2.10*   26:         2.40*   27:         2.70*
    *   28:         3.20*   29:         3.70*   30:         5.40*
    *   31:         4.90*   32:        30.14*   33:         4.40*
    *   34:         2.90*   35:         2.30*   36:         1.90*
    *   37:         1.70*   38:         1.50*   39:         1.30*
    *   40:         1.20*   41:         1.10*   42:         1.10*
    *   43:         1.00*   44:         1.00*   45:         0.90*
    *   46:         0.90*   47:         0.00*
==============================================================================
    DEPTH-VS.-STORAGE AND DEPTH-VS.-DISCHARGE INFORMATION:
------------------------------------------------------------------------------
    TOTAL NUMBER OF BASIN DEPTH INFORMATION ENTRIES =   6
------------------------------------------------------------------------------
    *BASIN-DEPTH  STORAGE    OUTFLOW  **BASIN-DEPTH  STORAGE    OUTFLOW  *
    *   (FEET)  (ACRE-FEET)   (CFS)   **   (FEET)  (ACRE-FEET)   (CFS)   *
    *      0.000      0.000      0.000**      1.000      0.149      0.100*
    *      2.000      0.316      0.278**      3.000      0.499      2.720*
    *      4.000      0.701      7.485**      5.000      0.922      9.818*
******************************************************************************
------------------------------------------------------------------------------
    INITIAL BASIN DEPTH(FEET) =    0.00
```

```
    INITIAL BASIN STORAGE(ACRE-FEET) =       0.00
    INITIAL BASIN OUTFLOW(CFS) =       0.00
-------------------------------------------------------------------------
-------------------------------------------------------------------------
    BASIN STORAGE, OUTFLOW AND DEPTH ROUTING VALUES:
     INTERVAL   {S-O*DT/2}   {S+O*DT/2}
      NUMBER   (ACRE-FEET) (ACRE-FEET)
          1      0.00000     0.00000
          2      0.14845     0.14955
          3      0.31447     0.31753
          4      0.48401     0.51399
          5      0.65976     0.74224
          6      0.86791     0.97609
    WHERE S=STORAGE(AF);O=OUTFLOW(AF/MIN.);DT=UNIT(MIN.)
-------------------------------------------------------------------------



         *UNIT-HYDROGRAPH STORAGE-BASIN ROUTING*
    NOTE: COMPUTED BASIN DEPTH, OUTFLOW, AND STORAGE QUANTITIES
          OCCUR AT THE GIVEN TIME. BASIN INFLOW VALUES REPRESENT THE
          AVERAGE INFLOW DURING THE RECENT HYDROGRAPH UNIT INTERVAL.

    GRAPH NOTATION: "I"=MEAN UNIT INFLOW; "O"=OUTFLOW AT GIVEN TIME
-------------------------------------------------------------------------
     TIME   INFLOW  OUTFLOW    STORAGE
    (HOURS) (CFS)    (CFS)    (ACRE-FT)  0.      8.     15.     23.     30.
       0.13     0.00     0.00       0.000 O       .       .       .       .
         [BASIN DEPTH(FEET) =    0.00]
       0.27     0.80     0.01       0.009 O       .       .       .       .
         [BASIN DEPTH(FEET) =    0.06]
       0.40     0.90     0.01       0.019 O       .       .       .       .
         [BASIN DEPTH(FEET) =    0.12]
       0.53     0.90     0.02       0.028 O       .       .       .       .
         [BASIN DEPTH(FEET) =    0.19]
       0.67     0.90     0.03       0.038 O       .       .       .       .
         [BASIN DEPTH(FEET) =    0.26]
       0.80     0.90     0.03       0.048 O       .       .       .       .
         [BASIN DEPTH(FEET) =    0.32]
       0.93     0.90     0.04       0.057 O       .       .       .       .
         [BASIN DEPTH(FEET) =    0.38]
       1.07     1.00     0.05       0.068 OI      .       .       .       .
         [BASIN DEPTH(FEET) =    0.45]
       1.20     1.00     0.05       0.078 OI      .       .       .       .
         [BASIN DEPTH(FEET) =    0.52]
       1.33     1.00     0.06       0.089 OI      .       .       .       .
         [BASIN DEPTH(FEET) =    0.59]
       1.47     1.10     0.07       0.100 OI      .       .       .       .
         [BASIN DEPTH(FEET) =    0.67]
       1.60     1.10     0.07       0.111 OI      .       .       .       .
         [BASIN DEPTH(FEET) =    0.75]
       1.73     1.10     0.08       0.123 OI      .       .       .       .
         [BASIN DEPTH(FEET) =    0.82]
       1.87     1.20     0.09       0.135 OI      .       .       .       .
         [BASIN DEPTH(FEET) =    0.91]
       2.00     1.20     0.10       0.147 OI      .       .       .       .
         [BASIN DEPTH(FEET) =    0.99]
       2.13     1.30     0.11       0.160 OI      .       .       .       .
         [BASIN DEPTH(FEET) =    1.07]
       2.27     1.30     0.13       0.173 OI      .       .       .       .
         [BASIN DEPTH(FEET) =    1.15]
```

```
2.40     1.40     0.14       0.187 OI      .       .       .       .
  [BASIN DEPTH(FEET) =    1.23]
2.53     1.40     0.16       0.201 OI      .       .       .       .
  [BASIN DEPTH(FEET) =    1.31]
2.67     1.50     0.17       0.216 OI      .       .       .       .
  [BASIN DEPTH(FEET) =    1.40]
2.80     1.60     0.19       0.231 OI      .       .       .       .
  [BASIN DEPTH(FEET) =    1.49]
2.93     1.70     0.21       0.248 OI      .       .       .       .
  [BASIN DEPTH(FEET) =    1.59]
3.07     1.80     0.22       0.265 OI      .       .       .       .
  [BASIN DEPTH(FEET) =    1.70]
3.20     2.00     0.24       0.285 O I     .       .       .       .
  [BASIN DEPTH(FEET) =    1.81]
3.33     2.10     0.27       0.305 O I     .       .       .       .
  [BASIN DEPTH(FEET) =    1.94]
3.47     2.40     0.44       0.328 O I     .       .       .       .
  [BASIN DEPTH(FEET) =    2.06]
3.60     2.70     0.75       0.351 O I     .       .       .       .
  [BASIN DEPTH(FEET) =    2.19]
3.73     3.20     1.08       0.376 .O I    .       .       .       .
  [BASIN DEPTH(FEET) =    2.33]
3.87     3.70     1.44       0.403 .O I    .       .       .       .
  [BASIN DEPTH(FEET) =    2.48]
4.00     5.40     1.98       0.444 . O  I  .       .       .       .
  [BASIN DEPTH(FEET) =    2.70]
4.13     4.90     2.38       0.474 . O  I  .       .       .       .
  [BASIN DEPTH(FEET) =    2.86]
4.27    30.14     7.99       0.749 .       O       .       .       I
  [BASIN DEPTH(FEET) =    4.22]
4.40     4.40     7.59       0.711 .   I   O       .       .       .
  [BASIN DEPTH(FEET) =    4.05]
4.53     2.90     6.63       0.665 .  I   O.       .       .       .
  [BASIN DEPTH(FEET) =    3.82]
4.67     2.30     5.64       0.623 . I  O  .       .       .       .
  [BASIN DEPTH(FEET) =    3.61]
4.80     1.90     4.78       0.586 . I  O  .       .       .       .
  [BASIN DEPTH(FEET) =    3.43]
4.93     1.70     4.07       0.556 .I  O   .       .       .       .
  [BASIN DEPTH(FEET) =    3.28]
5.07     1.50     3.48       0.531 .I O    .       .       .       .
  [BASIN DEPTH(FEET) =    3.16]
5.20     1.30     2.98       0.510 .I O    .       .       .       .
  [BASIN DEPTH(FEET) =    3.05]
5.33     1.20     2.63       0.492 .IO     .       .       .       .
  [BASIN DEPTH(FEET) =    2.96]
5.47     1.10     2.42       0.477 .IO     .       .       .       .
  [BASIN DEPTH(FEET) =    2.88]
5.60     1.10     2.24       0.463 .IO     .       .       .       .
  [BASIN DEPTH(FEET) =    2.80]
5.73     1.00     2.07       0.450 .IO     .       .       .       .
  [BASIN DEPTH(FEET) =    2.73]
5.87     1.00     1.92       0.439 .IO     .       .       .       .
  [BASIN DEPTH(FEET) =    2.67]
6.00     0.90     1.78       0.429 IO      .       .       .       .
  [BASIN DEPTH(FEET) =    2.62]
6.13     0.90     1.66       0.420 IO      .       .       .       .
  [BASIN DEPTH(FEET) =    2.57]
6.27     0.00     1.43       0.403 IO      .       .       .       .
  [BASIN DEPTH(FEET) =    2.47]
6.40     0.00     1.24       0.388 IO      .       .       .       .
  [BASIN DEPTH(FEET) =    2.39]
6.53     0.00     1.07       0.375 IO      .       .       .       .
```

```
   [BASIN DEPTH(FEET) =    2.32]
 6.67     0.00     0.92       0.364 O       .       .       .       .
   [BASIN DEPTH(FEET) =    2.26]
 6.80     0.00     0.80       0.355 O       .       .       .       .
   [BASIN DEPTH(FEET) =    2.21]
 6.93     0.00     0.69       0.347 O       .       .       .       .
   [BASIN DEPTH(FEET) =    2.17]
 7.07     0.00     0.59       0.340 O       .       .       .       .
   [BASIN DEPTH(FEET) =    2.13]
 7.20     0.00     0.51       0.333 O       .       .       .       .
   [BASIN DEPTH(FEET) =    2.10]
 7.33     0.00     0.44       0.328 O       .       .       .       .
   [BASIN DEPTH(FEET) =    2.07]
 7.47     0.00     0.38       0.324 O       .       .       .       .
   [BASIN DEPTH(FEET) =    2.04]
 7.60     0.00     0.33       0.320 O       .       .       .       .
   [BASIN DEPTH(FEET) =    2.02]
 7.73     0.00     0.28       0.316 O       .       .       .       .
   [BASIN DEPTH(FEET) =    2.00]
 7.87     0.00     0.28       0.313 O       .       .       .       .
   [BASIN DEPTH(FEET) =    1.98]
 8.00     0.00     0.27       0.310 O       .       .       .       .
   [BASIN DEPTH(FEET) =    1.97]
 8.13     0.00     0.27       0.307 O       .       .       .       .
   [BASIN DEPTH(FEET) =    1.95]
 8.27     0.00     0.27       0.304 O       .       .       .       .
   [BASIN DEPTH(FEET) =    1.93]
 8.40     0.00     0.26       0.302 O       .       .       .       .
   [BASIN DEPTH(FEET) =    1.91]
 8.53     0.00     0.26       0.299 O       .       .       .       .
   [BASIN DEPTH(FEET) =    1.90]
 8.67     0.00     0.26       0.296 O       .       .       .       .
   [BASIN DEPTH(FEET) =    1.88]
 8.80     0.00     0.25       0.293 O       .       .       .       .
   [BASIN DEPTH(FEET) =    1.86]
 8.93     0.00     0.25       0.290 O       .       .       .       .
   [BASIN DEPTH(FEET) =    1.85]
 9.07     0.00     0.25       0.287 O       .       .       .       .
   [BASIN DEPTH(FEET) =    1.83]
 9.20     0.00     0.24       0.285 O       .       .       .       .
   [BASIN DEPTH(FEET) =    1.81]
 9.33     0.00     0.24       0.282 O       .       .       .       .
   [BASIN DEPTH(FEET) =    1.80]
 9.47     0.00     0.24       0.279 O       .       .       .       .
   [BASIN DEPTH(FEET) =    1.78]
 9.60     0.00     0.24       0.277 O       .       .       .       .
   [BASIN DEPTH(FEET) =    1.77]
 9.73     0.00     0.23       0.274 O       .       .       .       .
   [BASIN DEPTH(FEET) =    1.75]
 9.87     0.00     0.23       0.272 O       .       .       .       .
   [BASIN DEPTH(FEET) =    1.73]
10.00     0.00     0.23       0.269 O       .       .       .       .
   [BASIN DEPTH(FEET) =    1.72]
10.13     0.00     0.23       0.267 O       .       .       .       .
   [BASIN DEPTH(FEET) =    1.70]
10.27     0.00     0.22       0.264 O       .       .       .       .
   [BASIN DEPTH(FEET) =    1.69]
10.40     0.00     0.22       0.262 O       .       .       .       .
   [BASIN DEPTH(FEET) =    1.67]
10.53     0.00     0.22       0.259 O       .       .       .       .
   [BASIN DEPTH(FEET) =    1.66]
10.67     0.00     0.22       0.257 O       .       .       .       .
   [BASIN DEPTH(FEET) =    1.65]
```

```
10.80     0.00     0.21       0.255 O       .       .       .       .
   [BASIN DEPTH(FEET) =    1.63]
10.93     0.00     0.21       0.252 O       .       .       .       .
   [BASIN DEPTH(FEET) =    1.62]
11.07     0.00     0.21       0.250 O       .       .       .       .
   [BASIN DEPTH(FEET) =    1.60]
11.20     0.00     0.21       0.248 O       .       .       .       .
   [BASIN DEPTH(FEET) =    1.59]
11.33     0.00     0.20       0.245 O       .       .       .       .
   [BASIN DEPTH(FEET) =    1.58]
11.47     0.00     0.20       0.243 O       .       .       .       .
   [BASIN DEPTH(FEET) =    1.56]
11.60     0.00     0.20       0.241 O       .       .       .       .
   [BASIN DEPTH(FEET) =    1.55]
11.73     0.00     0.20       0.239 O       .       .       .       .
   [BASIN DEPTH(FEET) =    1.54]
11.87     0.00     0.19       0.237 O       .       .       .       .
   [BASIN DEPTH(FEET) =    1.53]
12.00     0.00     0.19       0.235 O       .       .       .       .
   [BASIN DEPTH(FEET) =    1.51]
12.13     0.00     0.19       0.232 O       .       .       .       .
   [BASIN DEPTH(FEET) =    1.50]
12.27     0.00     0.19       0.230 O       .       .       .       .
   [BASIN DEPTH(FEET) =    1.49]
12.40     0.00     0.18       0.228 O       .       .       .       .
   [BASIN DEPTH(FEET) =    1.48]
12.53     0.00     0.18       0.226 O       .       .       .       .
   [BASIN DEPTH(FEET) =    1.46]
12.67     0.00     0.18       0.224 O       .       .       .       .
   [BASIN DEPTH(FEET) =    1.45]
12.80     0.00     0.18       0.222 O       .       .       .       .
   [BASIN DEPTH(FEET) =    1.44]
12.93     0.00     0.18       0.220 O       .       .       .       .
   [BASIN DEPTH(FEET) =    1.43]
13.07     0.00     0.17       0.218 O       .       .       .       .
   [BASIN DEPTH(FEET) =    1.42]
13.20     0.00     0.17       0.217 O       .       .       .       .
   [BASIN DEPTH(FEET) =    1.40]
13.33     0.00     0.17       0.215 O       .       .       .       .
   [BASIN DEPTH(FEET) =    1.39]
```

BASIN 4B
PROPOSED HYDROLOGY

RATIONAL METHOD HYDROGRAPH PROGRAM
COPYRIGHT 1992, 2001 RICK ENGINEERING COMPANY
RUN DATE 10/23/2014

TIME OF CONCENTRATION 8 MIN.
6 HOUR RAINFALL 3.2 INCHES
BASIN AREA 2.9 ACRES
RUNOFF COEFFICIENT 0.71
PEAK DISCHARGE 13.18 CFS

47 INTERVALS
TIME (MIN) = 0 DISCHARGE (CFS) = 0
TIME (MIN) = 8 DISCHARGE (CFS) = 0.4
TIME (MIN) = 16 DISCHARGE (CFS) = 0.4
TIME (MIN) = 24 DISCHARGE (CFS) = 0.4
TIME (MIN) = 32 DISCHARGE (CFS) = 0.4
TIME (MIN) = 40 DISCHARGE (CFS) = 0.4
TIME (MIN) = 48 DISCHARGE (CFS) = 0.4
TIME (MIN) = 56 DISCHARGE (CFS) = 0.5
TIME (MIN) = 64 DISCHARGE (CFS) = 0.5
TIME (MIN) = 72 DISCHARGE (CFS) = 0.5
TIME (MIN) = 80 DISCHARGE (CFS) = 0.5
TIME (MIN) = 88 DISCHARGE (CFS) = 0.5
TIME (MIN) = 96 DISCHARGE (CFS) = 0.5
TIME (MIN) = 104 DISCHARGE (CFS) = 0.5
TIME (MIN) = 112 DISCHARGE (CFS) = 0.6
TIME (MIN) = 120 DISCHARGE (CFS) = 0.6
TIME (MIN) = 128 DISCHARGE (CFS) = 0.6
TIME (MIN) = 136 DISCHARGE (CFS) = 0.6
TIME (MIN) = 144 DISCHARGE (CFS) = 0.7
TIME (MIN) = 152 DISCHARGE (CFS) = 0.7
TIME (MIN) = 160 DISCHARGE (CFS) = 0.7
TIME (MIN) = 168 DISCHARGE (CFS) = 0.8
TIME (MIN) = 176 DISCHARGE (CFS) = 0.8
TIME (MIN) = 184 DISCHARGE (CFS) = 0.9
TIME (MIN) = 192 DISCHARGE (CFS) = 1
TIME (MIN) = 200 DISCHARGE (CFS) = 1.1
TIME (MIN) = 208 DISCHARGE (CFS) = 1.2
TIME (MIN) = 216 DISCHARGE (CFS) = 1.5
TIME (MIN) = 224 DISCHARGE (CFS) = 1.7
TIME (MIN) = 232 DISCHARGE (CFS) = 2.5
TIME (MIN) = 240 DISCHARGE (CFS) = 3.2
TIME (MIN) = 248 DISCHARGE (CFS) = 13.18

TIME (MIN) = 256 DISCHARGE (CFS) = 2
TIME (MIN) = 264 DISCHARGE (CFS) = 1.4
TIME (MIN) = 272 DISCHARGE (CFS) = 1.1
TIME (MIN) = 280 DISCHARGE (CFS) = 0.9
TIME (MIN) = 288 DISCHARGE (CFS) = 0.8
TIME (MIN) = 296 DISCHARGE (CFS) = 0.7
TIME (MIN) = 304 DISCHARGE (CFS) = 0.6
TIME (MIN) = 312 DISCHARGE (CFS) = 0.6
TIME (MIN) = 320 DISCHARGE (CFS) = 0.5
TIME (MIN) = 328 DISCHARGE (CFS) = 0.5
TIME (MIN) = 336 DISCHARGE (CFS) = 0.5
TIME (MIN) = 344 DISCHARGE (CFS) = 0.4
TIME (MIN) = 352 DISCHARGE (CFS) = 0.4
TIME (MIN) = 360 DISCHARGE (CFS) = 0.4
TIME (MIN) = 368 DISCHARGE (CFS) = 0

```
****************************************************************************
                  HYDRAULICS ELEMENTS - II  PROGRAM PACKAGE

                   STORAGE BASIN HYDROGRAPH ROUTING MODEL
****************************************************************************
         (c) Copyright 1983-2012 Advanced Engineering Software (aes)
             Ver. 19.0  Release Date: 06/01/2012  License ID 1355

                            Analysis prepared by:

                              Fuscoe Engineering
                              6390 Greenwich Dr.
                                  Suite 170
                             San Diego, CA 92122

 ************************** DESCRIPTION OF STUDY **************************
* PROPOSED HYDROLOGY                                                       *
* DETENTION BASIN 4B AT NODE 431                                           *
* OCTOBER 2014                                                             *
 ***************************************************************************

    FILE NAME: BASIN4B.DAT
    TIME/DATE OF STUDY: 13:45 10/23/2014
===============================================================================
    ENTERED INFORMATION:
-------------------------------------------------------------------------------
    TOTAL NUMBER OF INFLOW HYDROGRAPH INTERVALS =   47
    CONSTANT HYDROGRAPH TIME UNIT(MINUTES) =    8.000
    ASSUMED INITIAL DEPTH(FEET) IN STORAGE BASIN =    0.00
-------------------------------------------------------------------------------
    ENTERED INFLOW HYDROGRAPH ORDINATES(CFS):
    *INTERVAL    FLOW   *INTERVAL    FLOW   *INTERVAL    FLOW   *
    * NUMBER     (CFS)  * NUMBER     (CFS)  * NUMBER     (CFS)  *
    *    1:         0.00*    2:         0.40*    3:         0.40*
    *    4:         0.40*    5:         0.40*    6:         0.40*
    *    7:         0.40*    8:         0.50*    9:         0.50*
    *   10:         0.50*   11:         0.50*   12:         0.50*
    *   13:         0.50*   14:         0.50*   15:         0.60*
    *   16:         0.60*   17:         0.60*   18:         0.60*
    *   19:         0.70*   20:         0.70*   21:         0.70*
    *   22:         0.80*   23:         0.80*   24:         0.90*
    *   25:         1.00*   26:         1.10*   27:         1.20*
    *   28:         1.50*   29:         1.70*   30:         2.50*
    *   31:         3.20*   32:        13.18*   33:         2.00*
    *   34:         1.40*   35:         1.10*   36:         0.90*
    *   37:         0.80*   38:         0.70*   39:         0.60*
    *   40:         0.60*   41:         0.50*   42:         0.50*
    *   43:         0.50*   44:         0.40*   45:         0.40*
    *   46:         0.40*   47:         0.00*
===============================================================================
    DEPTH-VS.-STORAGE AND DEPTH-VS.-DISCHARGE INFORMATION:
-------------------------------------------------------------------------------
    TOTAL NUMBER OF BASIN DEPTH INFORMATION ENTRIES =   4
-------------------------------------------------------------------------------
    *BASIN-DEPTH  STORAGE    OUTFLOW  **BASIN-DEPTH  STORAGE    OUTFLOW  *
    *   (FEET)  (ACRE-FEET)   (CFS)   **   (FEET)  (ACRE-FEET)   (CFS)   *
    *      0.000      0.000      0.000**      1.000      0.197      0.387*
    *      2.000      0.414      3.745**      3.000      0.651      5.181*
****************************************************************************
-------------------------------------------------------------------------------
    INITIAL BASIN DEPTH(FEET) =    0.00
    INITIAL BASIN STORAGE(ACRE-FEET) =       0.00
```

```
    INITIAL BASIN OUTFLOW(CFS) =       0.00
-----------------------------------------------------------------------------
-----------------------------------------------------------------------------
    BASIN STORAGE, OUTFLOW AND DEPTH ROUTING VALUES:
     INTERVAL   {S-O*DT/2}   {S+O*DT/2}
      NUMBER   (ACRE-FEET) (ACRE-FEET)
          1      0.00000     0.00000
          2      0.19487     0.19913
          3      0.39337     0.43463
          4      0.62245     0.67955
    WHERE S=STORAGE(AF);O=OUTFLOW(AF/MIN.);DT=UNIT(MIN.)
-----------------------------------------------------------------------------



         *UNIT-HYDROGRAPH STORAGE-BASIN ROUTING*
    NOTE: COMPUTED BASIN DEPTH, OUTFLOW, AND STORAGE QUANTITIES
          OCCUR AT THE GIVEN TIME. BASIN INFLOW VALUES REPRESENT THE
          AVERAGE INFLOW DURING THE RECENT HYDROGRAPH UNIT INTERVAL.

    GRAPH NOTATION: "I"=MEAN UNIT INFLOW; "O"=OUTFLOW AT GIVEN TIME
-----------------------------------------------------------------------------
     TIME   INFLOW  OUTFLOW    STORAGE
    (HOURS) (CFS)    (CFS)    (ACRE-FT)  0.      3.      7.     10.     13.
       0.13     0.00     0.00       0.000 O       .       .       .       .
         [BASIN DEPTH(FEET) =    0.00]
       0.27     0.40     0.01       0.004 O       .       .       .       .
         [BASIN DEPTH(FEET) =    0.02]
       0.40     0.40     0.02       0.009 O       .       .       .       .
         [BASIN DEPTH(FEET) =    0.04]
       0.53     0.40     0.03       0.013 O       .       .       .       .
         [BASIN DEPTH(FEET) =    0.06]
       0.67     0.40     0.03       0.017 O       .       .       .       .
         [BASIN DEPTH(FEET) =    0.09]
       0.80     0.40     0.04       0.021 O       .       .       .       .
         [BASIN DEPTH(FEET) =    0.11]
       0.93     0.40     0.05       0.025 O       .       .       .       .
         [BASIN DEPTH(FEET) =    0.13]
       1.07     0.50     0.06       0.030 OI      .       .       .       .
         [BASIN DEPTH(FEET) =    0.15]
       1.20     0.50     0.07       0.035 OI      .       .       .       .
         [BASIN DEPTH(FEET) =    0.18]
       1.33     0.50     0.08       0.039 OI      .       .       .       .
         [BASIN DEPTH(FEET) =    0.20]
       1.47     0.50     0.09       0.044 OI      .       .       .       .
         [BASIN DEPTH(FEET) =    0.22]
       1.60     0.50     0.10       0.048 OI      .       .       .       .
         [BASIN DEPTH(FEET) =    0.25]
       1.73     0.50     0.10       0.053 OI      .       .       .       .
         [BASIN DEPTH(FEET) =    0.27]
       1.87     0.50     0.11       0.057 OI      .       .       .       .
         [BASIN DEPTH(FEET) =    0.29]
       2.00     0.60     0.12       0.062 OI      .       .       .       .
         [BASIN DEPTH(FEET) =    0.32]
       2.13     0.60     0.13       0.068 OI      .       .       .       .
         [BASIN DEPTH(FEET) =    0.34]
       2.27     0.60     0.14       0.073 OI      .       .       .       .
         [BASIN DEPTH(FEET) =    0.37]
       2.40     0.60     0.15       0.078 OI      .       .       .       .
         [BASIN DEPTH(FEET) =    0.39]
       2.53     0.70     0.16       0.084 OI      .       .       .       .
```

```
  [BASIN DEPTH(FEET) =    0.42]
2.67     0.70     0.18       0.090 OI      .       .       .       .
  [BASIN DEPTH(FEET) =    0.45]
2.80     0.70     0.19       0.095 OI      .       .       .       .
  [BASIN DEPTH(FEET) =    0.48]
2.93     0.80     0.20       0.102 OI      .       .       .       .
  [BASIN DEPTH(FEET) =    0.52]
3.07     0.80     0.21       0.108 OI      .       .       .       .
  [BASIN DEPTH(FEET) =    0.55]
3.20     0.90     0.23       0.116 O I     .       .       .       .
  [BASIN DEPTH(FEET) =    0.59]
3.33     1.00     0.24       0.124 O I     .       .       .       .
  [BASIN DEPTH(FEET) =    0.63]
3.47     1.10     0.26       0.134 O I     .       .       .       .
  [BASIN DEPTH(FEET) =    0.68]
3.60     1.20     0.28       0.144 O I     .       .       .       .
  [BASIN DEPTH(FEET) =    0.73]
3.73     1.50     0.31       0.157 O  I    .       .       .       .
  [BASIN DEPTH(FEET) =    0.80]
3.87     1.70     0.34       0.172 O   I   .       .       .       .
  [BASIN DEPTH(FEET) =    0.87]
4.00     2.50     0.38       0.196 O     I .       .       .       .
  [BASIN DEPTH(FEET) =    0.99]
4.13     3.20     0.81       0.225 .O     I.       .       .       .
  [BASIN DEPTH(FEET) =    1.13]
4.27    13.18     2.76       0.350 .     O .       .       .       I
  [BASIN DEPTH(FEET) =    1.71]
4.40     2.00     2.64       0.342 .   I O .       .       .       .
  [BASIN DEPTH(FEET) =    1.67]
4.53     1.40     2.44       0.330 .  I O  .       .       .       .
  [BASIN DEPTH(FEET) =    1.61]
4.67     1.10     2.23       0.316 . I  O  .       .       .       .
  [BASIN DEPTH(FEET) =    1.55]
4.80     0.90     2.02       0.303 . I O   .       .       .       .
  [BASIN DEPTH(FEET) =    1.49]
4.93     0.80     1.83       0.290 .I  O   .       .       .       .
  [BASIN DEPTH(FEET) =    1.43]
5.07     0.70     1.65       0.279 .I  O   .       .       .       .
  [BASIN DEPTH(FEET) =    1.38]
5.20     0.60     1.49       0.268 .I O    .       .       .       .
  [BASIN DEPTH(FEET) =    1.33]
5.33     0.60     1.35       0.259 .I O    .       .       .       .
  [BASIN DEPTH(FEET) =    1.29]
5.47     0.50     1.21       0.250 .IO     .       .       .       .
  [BASIN DEPTH(FEET) =    1.25]
5.60     0.50     1.10       0.243 .IO     .       .       .       .
  [BASIN DEPTH(FEET) =    1.21]
5.73     0.50     1.01       0.237 .IO     .       .       .       .
  [BASIN DEPTH(FEET) =    1.18]
5.87     0.40     0.91       0.231 I O     .       .       .       .
  [BASIN DEPTH(FEET) =    1.16]
6.00     0.40     0.83       0.226 I O     .       .       .       .
  [BASIN DEPTH(FEET) =    1.13]
6.13     0.40     0.76       0.221 IO      .       .       .       .
  [BASIN DEPTH(FEET) =    1.11]
6.27     0.00     0.64       0.214 IO      .       .       .       .
  [BASIN DEPTH(FEET) =    1.08]
6.40     0.00     0.54       0.207 IO      .       .       .       .
  [BASIN DEPTH(FEET) =    1.05]
6.53     0.00     0.46       0.202 IO      .       .       .       .
  [BASIN DEPTH(FEET) =    1.02]
6.67     0.00     0.39       0.197 O       .       .       .       .
  [BASIN DEPTH(FEET) =    1.00]
```

```
 6.80     0.00     0.38       0.193 O       .       .       .       .
   [BASIN DEPTH(FEET) =    0.98]
 6.93     0.00     0.37       0.189 O       .       .       .       .
   [BASIN DEPTH(FEET) =    0.96]
 7.07     0.00     0.36       0.185 O       .       .       .       .
   [BASIN DEPTH(FEET) =    0.94]
 7.20     0.00     0.35       0.181 O       .       .       .       .
   [BASIN DEPTH(FEET) =    0.92]
 7.33     0.00     0.35       0.177 O       .       .       .       .
   [BASIN DEPTH(FEET) =    0.90]
 7.47     0.00     0.34       0.173 O       .       .       .       .
   [BASIN DEPTH(FEET) =    0.88]
 7.60     0.00     0.33       0.169 O       .       .       .       .
   [BASIN DEPTH(FEET) =    0.86]
 7.73     0.00     0.33       0.166 O       .       .       .       .
   [BASIN DEPTH(FEET) =    0.84]
 7.87     0.00     0.32       0.162 O       .       .       .       .
   [BASIN DEPTH(FEET) =    0.82]
 8.00     0.00     0.31       0.159 O       .       .       .       .
   [BASIN DEPTH(FEET) =    0.80]
 8.13     0.00     0.30       0.155 O       .       .       .       .
   [BASIN DEPTH(FEET) =    0.79]
 8.27     0.00     0.30       0.152 O       .       .       .       .
   [BASIN DEPTH(FEET) =    0.77]
 8.40     0.00     0.29       0.149 O       .       .       .       .
   [BASIN DEPTH(FEET) =    0.75]
 8.53     0.00     0.29       0.145 O       .       .       .       .
   [BASIN DEPTH(FEET) =    0.74]
 8.67     0.00     0.28       0.142 O       .       .       .       .
   [BASIN DEPTH(FEET) =    0.72]
 8.80     0.00     0.27       0.139 O       .       .       .       .
   [BASIN DEPTH(FEET) =    0.71]
 8.93     0.00     0.27       0.136 O       .       .       .       .
   [BASIN DEPTH(FEET) =    0.69]
 9.07     0.00     0.26       0.133 O       .       .       .       .
   [BASIN DEPTH(FEET) =    0.68]
 9.20     0.00     0.26       0.131 O       .       .       .       .
   [BASIN DEPTH(FEET) =    0.66]
 9.33     0.00     0.25       0.128 O       .       .       .       .
   [BASIN DEPTH(FEET) =    0.65]
 9.47     0.00     0.25       0.125 O       .       .       .       .
   [BASIN DEPTH(FEET) =    0.63]
 9.60     0.00     0.24       0.122 O       .       .       .       .
   [BASIN DEPTH(FEET) =    0.62]
 9.73     0.00     0.24       0.120 O       .       .       .       .
   [BASIN DEPTH(FEET) =    0.61]
 9.87     0.00     0.23       0.117 O       .       .       .       .
   [BASIN DEPTH(FEET) =    0.59]
10.00     0.00     0.23       0.115 O       .       .       .       .
   [BASIN DEPTH(FEET) =    0.58]
10.13     0.00     0.22       0.112 O       .       .       .       .
   [BASIN DEPTH(FEET) =    0.57]
10.27     0.00     0.22       0.110 O       .       .       .       .
   [BASIN DEPTH(FEET) =    0.56]
10.40     0.00     0.21       0.107 O       .       .       .       .
   [BASIN DEPTH(FEET) =    0.55]
10.53     0.00     0.21       0.105 O       .       .       .       .
   [BASIN DEPTH(FEET) =    0.53]
10.67     0.00     0.20       0.103 O       .       .       .       .
   [BASIN DEPTH(FEET) =    0.52]
10.80     0.00     0.20       0.101 O       .       .       .       .
   [BASIN DEPTH(FEET) =    0.51]
10.93     0.00     0.19       0.098 O       .       .       .       .
```

```
   [BASIN DEPTH(FEET) =    0.50]
11.07     0.00     0.19       0.096 O       .       .       .       .
   [BASIN DEPTH(FEET) =    0.49]
11.20     0.00     0.19       0.094 O       .       .       .       .
   [BASIN DEPTH(FEET) =    0.48]
11.33     0.00     0.18       0.092 O       .       .       .       .
   [BASIN DEPTH(FEET) =    0.47]
11.47     0.00     0.18       0.090 O       .       .       .       .
   [BASIN DEPTH(FEET) =    0.46]
11.60     0.00     0.17       0.088 O       .       .       .       .
   [BASIN DEPTH(FEET) =    0.45]
11.73     0.00     0.17       0.086 O       .       .       .       .
   [BASIN DEPTH(FEET) =    0.44]
11.87     0.00     0.17       0.085 O       .       .       .       .
   [BASIN DEPTH(FEET) =    0.43]
12.00     0.00     0.16       0.083 O       .       .       .       .
   [BASIN DEPTH(FEET) =    0.42]
12.13     0.00     0.16       0.081 O       .       .       .       .
   [BASIN DEPTH(FEET) =    0.41]
12.27     0.00     0.16       0.079 O       .       .       .       .
   [BASIN DEPTH(FEET) =    0.40]
12.40     0.00     0.15       0.078 O       .       .       .       .
   [BASIN DEPTH(FEET) =    0.39]
12.53     0.00     0.15       0.076 O       .       .       .       .
   [BASIN DEPTH(FEET) =    0.39]
12.67     0.00     0.15       0.074 O       .       .       .       .
   [BASIN DEPTH(FEET) =    0.38]
12.80     0.00     0.14       0.073 O       .       .       .       .
   [BASIN DEPTH(FEET) =    0.37]
12.93     0.00     0.14       0.071 O       .       .       .       .
   [BASIN DEPTH(FEET) =    0.36]
13.07     0.00     0.14       0.070 O       .       .       .       .
   [BASIN DEPTH(FEET) =    0.35]
13.20     0.00     0.13       0.068 O       .       .       .       .
   [BASIN DEPTH(FEET) =    0.35]
13.33     0.00     0.13       0.067 O       .       .       .       .
   [BASIN DEPTH(FEET) =    0.34]
```

DETENTION BASIN 5A
PROPOSED HYDROLOGY

RATIONAL METHOD HYDROGRAPH PROGRAM
COPYRIGHT 1992, 2001 RICK ENGINEERING COMPANY
RUN DATE 10/23/2014

TIME OF CONCENTRATION 7 MIN.
6 HOUR RAINFALL 3.2 INCHES
BASIN AREA 10.2 ACRES
RUNOFF COEFFICIENT 0.71
PEAK DISCHARGE 42.5 CFS

53 INTERVALS
TIME (MIN) = 0 DISCHARGE (CFS) = 0
TIME (MIN) = 7 DISCHARGE (CFS) = 1.4
TIME (MIN) = 14 DISCHARGE (CFS) = 1.4
TIME (MIN) = 21 DISCHARGE (CFS) = 1.4
TIME (MIN) = 28 DISCHARGE (CFS) = 1.5
TIME (MIN) = 35 DISCHARGE (CFS) = 1.5
TIME (MIN) = 42 DISCHARGE (CFS) = 1.5
TIME (MIN) = 49 DISCHARGE (CFS) = 1.6
TIME (MIN) = 56 DISCHARGE (CFS) = 1.6
TIME (MIN) = 63 DISCHARGE (CFS) = 1.7
TIME (MIN) = 70 DISCHARGE (CFS) = 1.7
TIME (MIN) = 77 DISCHARGE (CFS) = 1.7
TIME (MIN) = 84 DISCHARGE (CFS) = 1.8
TIME (MIN) = 91 DISCHARGE (CFS) = 1.8
TIME (MIN) = 98 DISCHARGE (CFS) = 1.9
TIME (MIN) = 105 DISCHARGE (CFS) = 2
TIME (MIN) = 112 DISCHARGE (CFS) = 2
TIME (MIN) = 119 DISCHARGE (CFS) = 2.1
TIME (MIN) = 126 DISCHARGE (CFS) = 2.2
TIME (MIN) = 133 DISCHARGE (CFS) = 2.3
TIME (MIN) = 140 DISCHARGE (CFS) = 2.3
TIME (MIN) = 147 DISCHARGE (CFS) = 2.5
TIME (MIN) = 154 DISCHARGE (CFS) = 2.6
TIME (MIN) = 161 DISCHARGE (CFS) = 2.8
TIME (MIN) = 168 DISCHARGE (CFS) = 2.9
TIME (MIN) = 175 DISCHARGE (CFS) = 3.1
TIME (MIN) = 182 DISCHARGE (CFS) = 3.3
TIME (MIN) = 189 DISCHARGE (CFS) = 3.6
TIME (MIN) = 196 DISCHARGE (CFS) = 3.8
TIME (MIN) = 203 DISCHARGE (CFS) = 4.4
TIME (MIN) = 210 DISCHARGE (CFS) = 4.8
TIME (MIN) = 217 DISCHARGE (CFS) = 5.8

TIME (MIN) = 224 DISCHARGE (CFS) = 6.6
TIME (MIN) = 231 DISCHARGE (CFS) = 9.7
TIME (MIN) = 238 DISCHARGE (CFS) = 20.4
TIME (MIN) = 245 DISCHARGE (CFS) = 42.5
TIME (MIN) = 252 DISCHARGE (CFS) = 7.8
TIME (MIN) = 259 DISCHARGE (CFS) = 5.2
TIME (MIN) = 266 DISCHARGE (CFS) = 4.1
TIME (MIN) = 273 DISCHARGE (CFS) = 3.4
TIME (MIN) = 280 DISCHARGE (CFS) = 3
TIME (MIN) = 287 DISCHARGE (CFS) = 2.7
TIME (MIN) = 294 DISCHARGE (CFS) = 2.4
TIME (MIN) = 301 DISCHARGE (CFS) = 2.2
TIME (MIN) = 308 DISCHARGE (CFS) = 2.1
TIME (MIN) = 315 DISCHARGE (CFS) = 1.9
TIME (MIN) = 322 DISCHARGE (CFS) = 1.8
TIME (MIN) = 329 DISCHARGE (CFS) = 1.7
TIME (MIN) = 336 DISCHARGE (CFS) = 1.6
TIME (MIN) = 343 DISCHARGE (CFS) = 1.6
TIME (MIN) = 350 DISCHARGE (CFS) = 1.5
TIME (MIN) = 357 DISCHARGE (CFS) = 1.4
TIME (MIN) = 364 DISCHARGE (CFS) = 0

```
****************************************************************************
                  HYDRAULICS ELEMENTS - II  PROGRAM PACKAGE

                   STORAGE BASIN HYDROGRAPH ROUTING MODEL
****************************************************************************
         (c) Copyright 1983-2012 Advanced Engineering Software (aes)
             Ver. 19.0  Release Date: 06/01/2012  License ID 1355

                             Analysis prepared by:

                               Fuscoe Engineering
                               6390 Greenwich Dr.
                                   Suite 170
                              San Diego, CA 92122

 ************************** DESCRIPTION OF STUDY **************************
* PROPOSED HYDROLOGY                                                       *
* DETENTION BASIN 5A AT NODE 2100                                          *
* OCTOBER 2014                                                             *
 ***************************************************************************

    FILE NAME: BASIN5A.DAT
    TIME/DATE OF STUDY: 14:40 10/23/2014
============================================================================
    ENTERED INFORMATION:
----------------------------------------------------------------------------
    TOTAL NUMBER OF INFLOW HYDROGRAPH INTERVALS =   53
    CONSTANT HYDROGRAPH TIME UNIT(MINUTES) =    7.000
    ASSUMED INITIAL DEPTH(FEET) IN STORAGE BASIN =    0.00
----------------------------------------------------------------------------
    ENTERED INFLOW HYDROGRAPH ORDINATES(CFS):
    *INTERVAL    FLOW   *INTERVAL    FLOW   *INTERVAL    FLOW   *
    * NUMBER     (CFS)  * NUMBER     (CFS)  * NUMBER     (CFS)  *
    *    1:         0.00*    2:         1.40*    3:         1.40*
    *    4:         1.40*    5:         1.50*    6:         1.50*
    *    7:         1.50*    8:         1.60*    9:         1.60*
    *   10:         1.70*   11:         1.70*   12:         1.70*
    *   13:         1.80*   14:         1.80*   15:         1.90*
    *   16:         2.00*   17:         2.00*   18:         2.10*
    *   19:         2.20*   20:         2.30*   21:         2.30*
    *   22:         2.50*   23:         2.60*   24:         2.80*
    *   25:         2.90*   26:         3.10*   27:         3.30*
    *   28:         3.60*   29:         3.80*   30:         4.40*
    *   31:         4.80*   32:         5.80*   33:         6.60*
    *   34:         9.70*   35:        20.40*   36:        42.50*
    *   37:         7.80*   38:         5.20*   39:         4.10*
    *   40:         3.40*   41:         3.00*   42:         2.70*
    *   43:         2.40*   44:         2.20*   45:         2.10*
    *   46:         1.90*   47:         1.80*   48:         1.70*
    *   49:         1.60*   50:         1.60*   51:         1.50*
    *   52:         1.40*   53:         0.00*
============================================================================
    DEPTH-VS.-STORAGE AND DEPTH-VS.-DISCHARGE INFORMATION:
----------------------------------------------------------------------------
    TOTAL NUMBER OF BASIN DEPTH INFORMATION ENTRIES =   6
----------------------------------------------------------------------------
    *BASIN-DEPTH  STORAGE    OUTFLOW  **BASIN-DEPTH  STORAGE    OUTFLOW  *
    *   (FEET)  (ACRE-FEET)   (CFS)   **   (FEET)  (ACRE-FEET)   (CFS)   *
    *      0.000      0.000      0.000**      1.000      0.427      0.100*
    *      2.000      0.891      0.432**      3.000      1.392      2.435*
    *      4.000      1.933     37.680**      5.000      2.513     43.650*
****************************************************************************
```

```
-----------------------------------------------------------------------------
    INITIAL BASIN DEPTH(FEET) =    0.00
    INITIAL BASIN STORAGE(ACRE-FEET) =       0.00
    INITIAL BASIN OUTFLOW(CFS) =       0.00
-----------------------------------------------------------------------------
-----------------------------------------------------------------------------
    BASIN STORAGE, OUTFLOW AND DEPTH ROUTING VALUES:
     INTERVAL   {S-O*DT/2}   {S+O*DT/2}
      NUMBER   (ACRE-FEET) (ACRE-FEET)
          1      0.00000     0.00000
          2      0.42652     0.42748
          3      0.88892     0.89308
          4      1.38026     1.40374
          5      1.75135     2.11465
          6      2.30257     2.72343
    WHERE S=STORAGE(AF);O=OUTFLOW(AF/MIN.);DT=UNIT(MIN.)
-----------------------------------------------------------------------------



         *UNIT-HYDROGRAPH STORAGE-BASIN ROUTING*
    NOTE: COMPUTED BASIN DEPTH, OUTFLOW, AND STORAGE QUANTITIES
          OCCUR AT THE GIVEN TIME. BASIN INFLOW VALUES REPRESENT THE
          AVERAGE INFLOW DURING THE RECENT HYDROGRAPH UNIT INTERVAL.

    GRAPH NOTATION: "I"=MEAN UNIT INFLOW; "O"=OUTFLOW AT GIVEN TIME
-----------------------------------------------------------------------------
     TIME   INFLOW  OUTFLOW    STORAGE
    (HOURS) (CFS)    (CFS)    (ACRE-FT)  0.     11.     21.     32.     42.
       0.12     0.00     0.00       0.000 O       .       .       .       .
         [BASIN DEPTH(FEET) =    0.00]
       0.23     1.40     0.00       0.013 OI      .       .       .       .
         [BASIN DEPTH(FEET) =    0.03]
       0.35     1.40     0.01       0.027 OI      .       .       .       .
         [BASIN DEPTH(FEET) =    0.06]
       0.47     1.40     0.01       0.040 OI      .       .       .       .
         [BASIN DEPTH(FEET) =    0.09]
       0.58     1.50     0.01       0.055 OI      .       .       .       .
         [BASIN DEPTH(FEET) =    0.13]
       0.70     1.50     0.02       0.069 OI      .       .       .       .
         [BASIN DEPTH(FEET) =    0.16]
       0.82     1.50     0.02       0.083 OI      .       .       .       .
         [BASIN DEPTH(FEET) =    0.20]
       0.93     1.60     0.02       0.099 OI      .       .       .       .
         [BASIN DEPTH(FEET) =    0.23]
       1.05     1.60     0.03       0.114 OI      .       .       .       .
         [BASIN DEPTH(FEET) =    0.27]
       1.17     1.70     0.03       0.130 OI      .       .       .       .
         [BASIN DEPTH(FEET) =    0.30]
       1.28     1.70     0.03       0.146 OI      .       .       .       .
         [BASIN DEPTH(FEET) =    0.34]
       1.40     1.70     0.04       0.162 OI      .       .       .       .
         [BASIN DEPTH(FEET) =    0.38]
       1.52     1.80     0.04       0.179 OI      .       .       .       .
         [BASIN DEPTH(FEET) =    0.42]
       1.63     1.80     0.05       0.196 OI      .       .       .       .
         [BASIN DEPTH(FEET) =    0.46]
       1.75     1.90     0.05       0.214 OI      .       .       .       .
         [BASIN DEPTH(FEET) =    0.50]
       1.87     2.00     0.05       0.233 OI      .       .       .       .
         [BASIN DEPTH(FEET) =    0.54]
```

```
1.98     2.00     0.06       0.251 OI      .       .       .       .
  [BASIN DEPTH(FEET) =    0.59]
2.10     2.10     0.06       0.271 OI      .       .       .       .
  [BASIN DEPTH(FEET) =    0.63]
2.22     2.20     0.07       0.291 OI      .       .       .       .
  [BASIN DEPTH(FEET) =    0.68]
2.33     2.30     0.07       0.313 OI      .       .       .       .
  [BASIN DEPTH(FEET) =    0.73]
2.45     2.30     0.08       0.334 OI      .       .       .       .
  [BASIN DEPTH(FEET) =    0.78]
2.57     2.50     0.08       0.358 OI      .       .       .       .
  [BASIN DEPTH(FEET) =    0.84]
2.68     2.60     0.09       0.382 OI      .       .       .       .
  [BASIN DEPTH(FEET) =    0.89]
2.80     2.80     0.10       0.408 O I     .       .       .       .
  [BASIN DEPTH(FEET) =    0.96]
2.92     2.90     0.11       0.435 O I     .       .       .       .
  [BASIN DEPTH(FEET) =    1.02]
3.03     3.10     0.13       0.464 O I     .       .       .       .
  [BASIN DEPTH(FEET) =    1.08]
3.15     3.30     0.15       0.494 O I     .       .       .       .
  [BASIN DEPTH(FEET) =    1.15]
3.27     3.60     0.17       0.528 O I     .       .       .       .
  [BASIN DEPTH(FEET) =    1.22]
3.38     3.80     0.20       0.562 O I     .       .       .       .
  [BASIN DEPTH(FEET) =    1.29]
3.50     4.40     0.23       0.603 O  I    .       .       .       .
  [BASIN DEPTH(FEET) =    1.38]
3.62     4.80     0.26       0.647 O  I    .       .       .       .
  [BASIN DEPTH(FEET) =    1.47]
3.73     5.80     0.30       0.700 O   I   .       .       .       .
  [BASIN DEPTH(FEET) =    1.59]
3.85     6.60     0.34       0.761 O   I   .       .       .       .
  [BASIN DEPTH(FEET) =    1.72]
3.97     9.70     0.40       0.851 O      I.       .       .       .
  [BASIN DEPTH(FEET) =    1.91]
4.08    20.40     1.03       1.040 O       .      I.       .       .
  [BASIN DEPTH(FEET) =    2.30]
4.20    42.50     4.49       1.423 .  O    .       .       .       I
  [BASIN DEPTH(FEET) =    3.06]
4.32     7.80     6.07       1.448 .   OI  .       .       .       .
  [BASIN DEPTH(FEET) =    3.10]
4.43     5.20     5.65       1.441 .  IO   .       .       .       .
  [BASIN DEPTH(FEET) =    3.09]
4.55     4.10     4.91       1.430 .  O    .       .       .       .
  [BASIN DEPTH(FEET) =    3.07]
4.67     3.40     4.19       1.419 . IO    .       .       .       .
  [BASIN DEPTH(FEET) =    3.05]
4.78     3.00     3.62       1.410 . O     .       .       .       .
  [BASIN DEPTH(FEET) =    3.03]
4.90     2.70     3.18       1.403 . O     .       .       .       .
  [BASIN DEPTH(FEET) =    3.02]
5.02     2.40     2.81       1.398 .IO     .       .       .       .
  [BASIN DEPTH(FEET) =    3.01]
5.13     2.20     2.52       1.393 .O      .       .       .       .
  [BASIN DEPTH(FEET) =    3.00]
5.25     2.10     2.43       1.390 .O      .       .       .       .
  [BASIN DEPTH(FEET) =    3.00]
5.37     1.90     2.41       1.385 .O      .       .       .       .
  [BASIN DEPTH(FEET) =    2.99]
5.48     1.80     2.38       1.379 .O      .       .       .       .
  [BASIN DEPTH(FEET) =    2.97]
5.60     1.70     2.36       1.373 .O      .       .       .       .
```

```
  [BASIN DEPTH(FEET) =    2.96]
5.72     1.60     2.33       1.365 .O      .       .       .       .
  [BASIN DEPTH(FEET) =    2.95]
5.83     1.60     2.30       1.358 .O      .       .       .       .
  [BASIN DEPTH(FEET) =    2.93]
5.95     1.50     2.27       1.351 .O      .       .       .       .
  [BASIN DEPTH(FEET) =    2.92]
6.07     1.40     2.24       1.343 .O      .       .       .       .
  [BASIN DEPTH(FEET) =    2.90]
6.18     0.00     2.15       1.321 IO      .       .       .       .
  [BASIN DEPTH(FEET) =    2.86]
6.30     0.00     2.07       1.301 IO      .       .       .       .
  [BASIN DEPTH(FEET) =    2.82]
6.42     0.00     1.99       1.282 IO      .       .       .       .
  [BASIN DEPTH(FEET) =    2.78]
6.53     0.00     1.92       1.263 IO      .       .       .       .
  [BASIN DEPTH(FEET) =    2.74]
6.65     0.00     1.85       1.245 IO      .       .       .       .
  [BASIN DEPTH(FEET) =    2.71]
6.77     0.00     1.78       1.227 IO      .       .       .       .
  [BASIN DEPTH(FEET) =    2.67]
6.88     0.00     1.71       1.210 IO      .       .       .       .
  [BASIN DEPTH(FEET) =    2.64]
7.00     0.00     1.64       1.194 IO      .       .       .       .
  [BASIN DEPTH(FEET) =    2.61]
7.12     0.00     1.58       1.179 IO      .       .       .       .
  [BASIN DEPTH(FEET) =    2.57]
7.23     0.00     1.52       1.164 IO      .       .       .       .
  [BASIN DEPTH(FEET) =    2.54]
7.35     0.00     1.46       1.149 IO      .       .       .       .
  [BASIN DEPTH(FEET) =    2.52]
7.47     0.00     1.41       1.135 IO      .       .       .       .
  [BASIN DEPTH(FEET) =    2.49]
7.58     0.00     1.36       1.122 IO      .       .       .       .
  [BASIN DEPTH(FEET) =    2.46]
7.70     0.00     1.30       1.109 O       .       .       .       .
  [BASIN DEPTH(FEET) =    2.44]
7.82     0.00     1.26       1.097 O       .       .       .       .
  [BASIN DEPTH(FEET) =    2.41]
7.93     0.00     1.21       1.085 O       .       .       .       .
  [BASIN DEPTH(FEET) =    2.39]
8.05     0.00     1.16       1.074 O       .       .       .       .
  [BASIN DEPTH(FEET) =    2.36]
8.17     0.00     1.12       1.063 O       .       .       .       .
  [BASIN DEPTH(FEET) =    2.34]
8.28     0.00     1.08       1.052 O       .       .       .       .
  [BASIN DEPTH(FEET) =    2.32]
8.40     0.00     1.03       1.042 O       .       .       .       .
  [BASIN DEPTH(FEET) =    2.30]
8.52     0.00     1.00       1.032 O       .       .       .       .
  [BASIN DEPTH(FEET) =    2.28]
8.63     0.00     0.96       1.023 O       .       .       .       .
  [BASIN DEPTH(FEET) =    2.26]
8.75     0.00     0.92       1.014 O       .       .       .       .
  [BASIN DEPTH(FEET) =    2.24]
8.87     0.00     0.89       1.005 O       .       .       .       .
  [BASIN DEPTH(FEET) =    2.23]
8.98     0.00     0.85       0.996 O       .       .       .       .
  [BASIN DEPTH(FEET) =    2.21]
9.10     0.00     0.82       0.988 O       .       .       .       .
  [BASIN DEPTH(FEET) =    2.19]
9.22     0.00     0.79       0.981 O       .       .       .       .
  [BASIN DEPTH(FEET) =    2.18]
```

```
 9.33     0.00     0.76       0.973 O       .       .       .       .
   [BASIN DEPTH(FEET) =    2.16]
 9.45     0.00     0.73       0.966 O       .       .       .       .
   [BASIN DEPTH(FEET) =    2.15]
 9.57     0.00     0.70       0.959 O       .       .       .       .
   [BASIN DEPTH(FEET) =    2.14]
 9.68     0.00     0.68       0.952 O       .       .       .       .
   [BASIN DEPTH(FEET) =    2.12]
 9.80     0.00     0.65       0.946 O       .       .       .       .
   [BASIN DEPTH(FEET) =    2.11]
 9.92     0.00     0.63       0.940 O       .       .       .       .
   [BASIN DEPTH(FEET) =    2.10]
10.03     0.00     0.60       0.934 O       .       .       .       .
   [BASIN DEPTH(FEET) =    2.09]
10.15     0.00     0.58       0.928 O       .       .       .       .
   [BASIN DEPTH(FEET) =    2.07]
10.27     0.00     0.56       0.923 O       .       .       .       .
   [BASIN DEPTH(FEET) =    2.06]
10.38     0.00     0.54       0.917 O       .       .       .       .
   [BASIN DEPTH(FEET) =    2.05]
10.50     0.00     0.52       0.912 O       .       .       .       .
   [BASIN DEPTH(FEET) =    2.04]
10.62     0.00     0.50       0.907 O       .       .       .       .
   [BASIN DEPTH(FEET) =    2.03]
10.73     0.00     0.48       0.903 O       .       .       .       .
   [BASIN DEPTH(FEET) =    2.02]
10.85     0.00     0.46       0.898 O       .       .       .       .
   [BASIN DEPTH(FEET) =    2.01]
10.97     0.00     0.44       0.894 O       .       .       .       .
   [BASIN DEPTH(FEET) =    2.01]
11.08     0.00     0.43       0.890 O       .       .       .       .
   [BASIN DEPTH(FEET) =    2.00]
11.20     0.00     0.43       0.885 O       .       .       .       .
   [BASIN DEPTH(FEET) =    1.99]
11.32     0.00     0.43       0.881 O       .       .       .       .
   [BASIN DEPTH(FEET) =    1.98]
11.43     0.00     0.42       0.877 O       .       .       .       .
   [BASIN DEPTH(FEET) =    1.97]
11.55     0.00     0.42       0.873 O       .       .       .       .
   [BASIN DEPTH(FEET) =    1.96]
11.67     0.00     0.42       0.869 O       .       .       .       .
   [BASIN DEPTH(FEET) =    1.95]
```

BASIN 5B
PROPOSED HYDROLOGY

RATIONAL METHOD HYDROGRAPH PROGRAM
COPYRIGHT 1992, 2001 RICK ENGINEERING COMPANY
RUN DATE 10/23/2014

TIME OF CONCENTRATION 7 MIN.
6 HOUR RAINFALL 3.2 INCHES
BASIN AREA 5.3 ACRES
RUNOFF COEFFICIENT 0.71
PEAK DISCHARGE 24.49 CFS

53 INTERVALS
TIME (MIN) = 0 DISCHARGE (CFS) = 0
TIME (MIN) = 7 DISCHARGE (CFS) = 0.7
TIME (MIN) = 14 DISCHARGE (CFS) = 0.7
TIME (MIN) = 21 DISCHARGE (CFS) = 0.8
TIME (MIN) = 28 DISCHARGE (CFS) = 0.8
TIME (MIN) = 35 DISCHARGE (CFS) = 0.8
TIME (MIN) = 42 DISCHARGE (CFS) = 0.8
TIME (MIN) = 49 DISCHARGE (CFS) = 0.8
TIME (MIN) = 56 DISCHARGE (CFS) = 0.8
TIME (MIN) = 63 DISCHARGE (CFS) = 0.9
TIME (MIN) = 70 DISCHARGE (CFS) = 0.9
TIME (MIN) = 77 DISCHARGE (CFS) = 0.9
TIME (MIN) = 84 DISCHARGE (CFS) = 0.9
TIME (MIN) = 91 DISCHARGE (CFS) = 1
TIME (MIN) = 98 DISCHARGE (CFS) = 1
TIME (MIN) = 105 DISCHARGE (CFS) = 1
TIME (MIN) = 112 DISCHARGE (CFS) = 1
TIME (MIN) = 119 DISCHARGE (CFS) = 1.1
TIME (MIN) = 126 DISCHARGE (CFS) = 1.1
TIME (MIN) = 133 DISCHARGE (CFS) = 1.2
TIME (MIN) = 140 DISCHARGE (CFS) = 1.2
TIME (MIN) = 147 DISCHARGE (CFS) = 1.3
TIME (MIN) = 154 DISCHARGE (CFS) = 1.3
TIME (MIN) = 161 DISCHARGE (CFS) = 1.4
TIME (MIN) = 168 DISCHARGE (CFS) = 1.5
TIME (MIN) = 175 DISCHARGE (CFS) = 1.6
TIME (MIN) = 182 DISCHARGE (CFS) = 1.7
TIME (MIN) = 189 DISCHARGE (CFS) = 1.9
TIME (MIN) = 196 DISCHARGE (CFS) = 2
TIME (MIN) = 203 DISCHARGE (CFS) = 2.3
TIME (MIN) = 210 DISCHARGE (CFS) = 2.5
TIME (MIN) = 217 DISCHARGE (CFS) = 3

TIME (MIN) = 224 DISCHARGE (CFS) = 3.4
TIME (MIN) = 231 DISCHARGE (CFS) = 5.1
TIME (MIN) = 238 DISCHARGE (CFS) = 8.2
TIME (MIN) = 245 DISCHARGE (CFS) = 24.49
TIME (MIN) = 252 DISCHARGE (CFS) = 4.1
TIME (MIN) = 259 DISCHARGE (CFS) = 2.7
TIME (MIN) = 266 DISCHARGE (CFS) = 2.1
TIME (MIN) = 273 DISCHARGE (CFS) = 1.8
TIME (MIN) = 280 DISCHARGE (CFS) = 1.5
TIME (MIN) = 287 DISCHARGE (CFS) = 1.4
TIME (MIN) = 294 DISCHARGE (CFS) = 1.3
TIME (MIN) = 301 DISCHARGE (CFS) = 1.2
TIME (MIN) = 308 DISCHARGE (CFS) = 1.1
TIME (MIN) = 315 DISCHARGE (CFS) = 1
TIME (MIN) = 322 DISCHARGE (CFS) = 0.9
TIME (MIN) = 329 DISCHARGE (CFS) = 0.9
TIME (MIN) = 336 DISCHARGE (CFS) = 0.8
TIME (MIN) = 343 DISCHARGE (CFS) = 0.8
TIME (MIN) = 350 DISCHARGE (CFS) = 0.8
TIME (MIN) = 357 DISCHARGE (CFS) = 0.7
TIME (MIN) = 364 DISCHARGE (CFS) = 0

```
****************************************************************************
                  HYDRAULICS ELEMENTS - II  PROGRAM PACKAGE

                   STORAGE BASIN HYDROGRAPH ROUTING MODEL
****************************************************************************
         (c) Copyright 1983-2012 Advanced Engineering Software (aes)
             Ver. 19.0  Release Date: 06/01/2012  License ID 1355

                             Analysis prepared by:

                               Fuscoe Engineering
                               6390 Greenwich Dr.
                                   Suite 170
                              San Diego, CA 92122

 ************************** DESCRIPTION OF STUDY **************************
* PROPOSED HYDROLOGY                                                       *
* DETENTION BASIN 5B AT NODE 2117                                          *
* OCTOBER 2014                                                             *
 ***************************************************************************

    FILE NAME: BASIN5B.DAT
    TIME/DATE OF STUDY: 15:13 10/23/2014
============================================================================
    ENTERED INFORMATION:
----------------------------------------------------------------------------
    TOTAL NUMBER OF INFLOW HYDROGRAPH INTERVALS =   53
    CONSTANT HYDROGRAPH TIME UNIT(MINUTES) =    7.000
    ASSUMED INITIAL DEPTH(FEET) IN STORAGE BASIN =    0.00
----------------------------------------------------------------------------
    ENTERED INFLOW HYDROGRAPH ORDINATES(CFS):
    *INTERVAL    FLOW   *INTERVAL    FLOW   *INTERVAL    FLOW   *
    * NUMBER     (CFS)  * NUMBER     (CFS)  * NUMBER     (CFS)  *
    *    1:        0.00*    2:        0.70*    3:        0.70*
    *    4:        0.80*    5:        0.80*    6:        0.80*
    *    7:        0.80*    8:        0.80*    9:        0.80*
    *   10:        0.90*   11:        0.90*   12:        0.90*
    *   13:        0.90*   14:        1.00*   15:        1.00*
    *   16:        1.00*   17:        1.00*   18:        1.10*
    *   19:        1.10*   20:        1.20*   21:        1.20*
    *   22:        1.30*   23:        1.30*   24:        1.40*
    *   25:        1.50*   26:        1.60*   27:        1.70*
    *   28:        1.90*   29:        2.00*   30:        2.30*
    *   31:        2.50*   32:        3.00*   33:        3.40*
    *   34:        5.10*   35:        8.20*   36:       24.49*
    *   37:        4.10*   38:        2.70*   39:        2.10*
    *   40:        1.80*   41:        1.50*   42:        1.40*
    *   43:        1.30*   44:        1.20*   45:        1.10*
    *   46:        1.00*   47:        0.90*   48:        0.90*
    *   49:        0.80*   50:        0.80*   51:        0.80*
    *   52:        0.70*   53:        0.00*
============================================================================
    DEPTH-VS.-STORAGE AND DEPTH-VS.-DISCHARGE INFORMATION:
----------------------------------------------------------------------------
    TOTAL NUMBER OF BASIN DEPTH INFORMATION ENTRIES =   6
----------------------------------------------------------------------------
    *BASIN-DEPTH  STORAGE    OUTFLOW  **BASIN-DEPTH  STORAGE    OUTFLOW  *
    *   (FEET)  (ACRE-FEET)   (CFS)   **   (FEET)  (ACRE-FEET)   (CFS)   *
    *      0.000      0.000      0.000**      1.000      0.133      0.100*
    *      2.000      0.290      0.145**      3.000      0.472      1.661*
    *      4.000      0.678      8.296**      5.000      0.911     11.280*
****************************************************************************
```

```
-----------------------------------------------------------------------------
    INITIAL BASIN DEPTH(FEET) =    0.00
    INITIAL BASIN STORAGE(ACRE-FEET) =       0.00
    INITIAL BASIN OUTFLOW(CFS) =       0.00
-----------------------------------------------------------------------------
-----------------------------------------------------------------------------
    BASIN STORAGE, OUTFLOW AND DEPTH ROUTING VALUES:
     INTERVAL   {S-O*DT/2}   {S+O*DT/2}
      NUMBER   (ACRE-FEET) (ACRE-FEET)
          1      0.00000     0.00000
          2      0.13252     0.13348
          3      0.28930     0.29070
          4      0.46399     0.48001
          5      0.63801     0.71799
          6      0.85662     0.96538
    WHERE S=STORAGE(AF);O=OUTFLOW(AF/MIN.);DT=UNIT(MIN.)
-----------------------------------------------------------------------------



         *UNIT-HYDROGRAPH STORAGE-BASIN ROUTING*
    NOTE: COMPUTED BASIN DEPTH, OUTFLOW, AND STORAGE QUANTITIES
          OCCUR AT THE GIVEN TIME. BASIN INFLOW VALUES REPRESENT THE
          AVERAGE INFLOW DURING THE RECENT HYDROGRAPH UNIT INTERVAL.

    GRAPH NOTATION: "I"=MEAN UNIT INFLOW; "O"=OUTFLOW AT GIVEN TIME
-----------------------------------------------------------------------------
     TIME   INFLOW  OUTFLOW    STORAGE
    (HOURS) (CFS)    (CFS)    (ACRE-FT)  0.      6.     12.     18.     24.
       0.12     0.00     0.00       0.000 O       .       .       .       .
         [BASIN DEPTH(FEET) =    0.00]
       0.23     0.70     0.01       0.007 O       .       .       .       .
         [BASIN DEPTH(FEET) =    0.05]
       0.35     0.70     0.01       0.013 O       .       .       .       .
         [BASIN DEPTH(FEET) =    0.10]
       0.47     0.80     0.02       0.021 OI      .       .       .       .
         [BASIN DEPTH(FEET) =    0.16]
       0.58     0.80     0.02       0.029 OI      .       .       .       .
         [BASIN DEPTH(FEET) =    0.21]
       0.70     0.80     0.03       0.036 OI      .       .       .       .
         [BASIN DEPTH(FEET) =    0.27]
       0.82     0.80     0.03       0.043 OI      .       .       .       .
         [BASIN DEPTH(FEET) =    0.33]
       0.93     0.80     0.04       0.051 OI      .       .       .       .
         [BASIN DEPTH(FEET) =    0.38]
       1.05     0.80     0.04       0.058 OI      .       .       .       .
         [BASIN DEPTH(FEET) =    0.44]
       1.17     0.90     0.05       0.066 OI      .       .       .       .
         [BASIN DEPTH(FEET) =    0.50]
       1.28     0.90     0.06       0.075 OI      .       .       .       .
         [BASIN DEPTH(FEET) =    0.56]
       1.40     0.90     0.06       0.083 OI      .       .       .       .
         [BASIN DEPTH(FEET) =    0.62]
       1.52     0.90     0.07       0.091 OI      .       .       .       .
         [BASIN DEPTH(FEET) =    0.68]
       1.63     1.00     0.07       0.100 OI      .       .       .       .
         [BASIN DEPTH(FEET) =    0.75]
       1.75     1.00     0.08       0.109 OI      .       .       .       .
         [BASIN DEPTH(FEET) =    0.82]
       1.87     1.00     0.09       0.117 OI      .       .       .       .
         [BASIN DEPTH(FEET) =    0.88]
```

```
1.98     1.00     0.09       0.126 OI      .       .       .       .
  [BASIN DEPTH(FEET) =    0.95]
2.10     1.10     0.10       0.136 OI      .       .       .       .
  [BASIN DEPTH(FEET) =    1.02]
2.22     1.10     0.10       0.145 OI      .       .       .       .
  [BASIN DEPTH(FEET) =    1.08]
2.33     1.20     0.11       0.156 OI      .       .       .       .
  [BASIN DEPTH(FEET) =    1.15]
2.45     1.20     0.11       0.166 OI      .       .       .       .
  [BASIN DEPTH(FEET) =    1.21]
2.57     1.30     0.11       0.178 OI      .       .       .       .
  [BASIN DEPTH(FEET) =    1.29]
2.68     1.30     0.12       0.189 OI      .       .       .       .
  [BASIN DEPTH(FEET) =    1.36]
2.80     1.40     0.12       0.202 OI      .       .       .       .
  [BASIN DEPTH(FEET) =    1.44]
2.92     1.50     0.12       0.215 OI      .       .       .       .
  [BASIN DEPTH(FEET) =    1.52]
3.03     1.60     0.13       0.229 O I     .       .       .       .
  [BASIN DEPTH(FEET) =    1.61]
3.15     1.70     0.13       0.244 O I     .       .       .       .
  [BASIN DEPTH(FEET) =    1.71]
3.27     1.90     0.14       0.261 O I     .       .       .       .
  [BASIN DEPTH(FEET) =    1.82]
3.38     2.00     0.14       0.279 O I     .       .       .       .
  [BASIN DEPTH(FEET) =    1.93]
3.50     2.30     0.23       0.300 O  I    .       .       .       .
  [BASIN DEPTH(FEET) =    2.05]
3.62     2.50     0.40       0.321 O  I    .       .       .       .
  [BASIN DEPTH(FEET) =    2.17]
3.73     3.00     0.60       0.345 O  I    .       .       .       .
  [BASIN DEPTH(FEET) =    2.30]
3.85     3.40     0.82       0.371 .O  I   .       .       .       .
  [BASIN DEPTH(FEET) =    2.44]
3.97     5.10     1.15       0.411 .O    I .       .       .       .
  [BASIN DEPTH(FEET) =    2.66]
4.08     8.20     1.77       0.475 . O     . I     .       .       .
  [BASIN DEPTH(FEET) =    3.02]
4.20    24.49     7.88       0.665 .       . O     .       .       I
  [BASIN DEPTH(FEET) =    3.94]
4.32     4.10     6.86       0.634 .    I  O       .       .       .
  [BASIN DEPTH(FEET) =    3.78]
4.43     2.70     5.74       0.599 .  I   O.       .       .       .
  [BASIN DEPTH(FEET) =    3.62]
4.55     2.10     4.76       0.568 . I   O .       .       .       .
  [BASIN DEPTH(FEET) =    3.47]
4.67     1.80     3.97       0.544 . I  O  .       .       .       .
  [BASIN DEPTH(FEET) =    3.35]
4.78     1.50     3.30       0.523 .I  O   .       .       .       .
  [BASIN DEPTH(FEET) =    3.25]
4.90     1.40     2.79       0.507 .I O    .       .       .       .
  [BASIN DEPTH(FEET) =    3.17]
5.02     1.30     2.39       0.495 .I O    .       .       .       .
  [BASIN DEPTH(FEET) =    3.11]
5.13     1.20     2.07       0.485 .IO     .       .       .       .
  [BASIN DEPTH(FEET) =    3.06]
5.25     1.10     1.81       0.477 .IO     .       .       .       .
  [BASIN DEPTH(FEET) =    3.02]
5.37     1.00     1.64       0.470 .IO     .       .       .       .
  [BASIN DEPTH(FEET) =    2.99]
5.48     0.90     1.58       0.463 .IO     .       .       .       .
  [BASIN DEPTH(FEET) =    2.95]
5.60     0.90     1.53       0.456 .IO     .       .       .       .
```

```
  [BASIN DEPTH(FEET) =    2.91]
5.72     0.80     1.47       0.450 .O      .       .       .       .
  [BASIN DEPTH(FEET) =    2.88]
5.83     0.80     1.42       0.443 .O      .       .       .       .
  [BASIN DEPTH(FEET) =    2.84]
5.95     0.80     1.37       0.438 .O      .       .       .       .
  [BASIN DEPTH(FEET) =    2.81]
6.07     0.70     1.32       0.431 IO      .       .       .       .
  [BASIN DEPTH(FEET) =    2.78]
6.18     0.00     1.22       0.419 IO      .       .       .       .
  [BASIN DEPTH(FEET) =    2.71]
6.30     0.00     1.13       0.408 IO      .       .       .       .
  [BASIN DEPTH(FEET) =    2.65]
6.42     0.00     1.04       0.397 IO      .       .       .       .
  [BASIN DEPTH(FEET) =    2.59]
6.53     0.00     0.96       0.388 IO      .       .       .       .
  [BASIN DEPTH(FEET) =    2.54]
6.65     0.00     0.88       0.379 IO      .       .       .       .
  [BASIN DEPTH(FEET) =    2.49]
6.77     0.00     0.82       0.371 IO      .       .       .       .
  [BASIN DEPTH(FEET) =    2.44]
6.88     0.00     0.75       0.363 O       .       .       .       .
  [BASIN DEPTH(FEET) =    2.40]
7.00     0.00     0.70       0.356 O       .       .       .       .
  [BASIN DEPTH(FEET) =    2.36]
7.12     0.00     0.64       0.350 O       .       .       .       .
  [BASIN DEPTH(FEET) =    2.33]
7.23     0.00     0.59       0.344 O       .       .       .       .
  [BASIN DEPTH(FEET) =    2.29]
7.35     0.00     0.55       0.338 O       .       .       .       .
  [BASIN DEPTH(FEET) =    2.26]
7.47     0.00     0.50       0.333 O       .       .       .       .
  [BASIN DEPTH(FEET) =    2.24]
7.58     0.00     0.47       0.328 O       .       .       .       .
  [BASIN DEPTH(FEET) =    2.21]
7.70     0.00     0.43       0.324 O       .       .       .       .
  [BASIN DEPTH(FEET) =    2.19]
7.82     0.00     0.40       0.320 O       .       .       .       .
  [BASIN DEPTH(FEET) =    2.17]
7.93     0.00     0.37       0.316 O       .       .       .       .
  [BASIN DEPTH(FEET) =    2.15]
8.05     0.00     0.34       0.313 O       .       .       .       .
  [BASIN DEPTH(FEET) =    2.13]
8.17     0.00     0.31       0.310 O       .       .       .       .
  [BASIN DEPTH(FEET) =    2.11]
8.28     0.00     0.29       0.307 O       .       .       .       .
  [BASIN DEPTH(FEET) =    2.09]
8.40     0.00     0.27       0.304 O       .       .       .       .
  [BASIN DEPTH(FEET) =    2.08]
8.52     0.00     0.24       0.302 O       .       .       .       .
  [BASIN DEPTH(FEET) =    2.07]
8.63     0.00     0.23       0.300 O       .       .       .       .
  [BASIN DEPTH(FEET) =    2.05]
8.75     0.00     0.21       0.298 O       .       .       .       .
  [BASIN DEPTH(FEET) =    2.04]
8.87     0.00     0.19       0.296 O       .       .       .       .
  [BASIN DEPTH(FEET) =    2.03]
8.98     0.00     0.18       0.294 O       .       .       .       .
  [BASIN DEPTH(FEET) =    2.02]
9.10     0.00     0.16       0.292 O       .       .       .       .
  [BASIN DEPTH(FEET) =    2.01]
9.22     0.00     0.15       0.291 O       .       .       .       .
  [BASIN DEPTH(FEET) =    2.00]
```

```
 9.33     0.00     0.14       0.289 O       .       .       .       .
   [BASIN DEPTH(FEET) =    2.00]
 9.45     0.00     0.14       0.288 O       .       .       .       .
   [BASIN DEPTH(FEET) =    1.99]
 9.57     0.00     0.14       0.287 O       .       .       .       .
   [BASIN DEPTH(FEET) =    1.98]
 9.68     0.00     0.14       0.285 O       .       .       .       .
   [BASIN DEPTH(FEET) =    1.97]
 9.80     0.00     0.14       0.284 O       .       .       .       .
   [BASIN DEPTH(FEET) =    1.96]
 9.92     0.00     0.14       0.282 O       .       .       .       .
   [BASIN DEPTH(FEET) =    1.95]
10.03     0.00     0.14       0.281 O       .       .       .       .
   [BASIN DEPTH(FEET) =    1.94]
10.15     0.00     0.14       0.280 O       .       .       .       .
   [BASIN DEPTH(FEET) =    1.93]
10.27     0.00     0.14       0.278 O       .       .       .       .
   [BASIN DEPTH(FEET) =    1.93]
10.38     0.00     0.14       0.277 O       .       .       .       .
   [BASIN DEPTH(FEET) =    1.92]
10.50     0.00     0.14       0.276 O       .       .       .       .
   [BASIN DEPTH(FEET) =    1.91]
10.62     0.00     0.14       0.274 O       .       .       .       .
   [BASIN DEPTH(FEET) =    1.90]
10.73     0.00     0.14       0.273 O       .       .       .       .
   [BASIN DEPTH(FEET) =    1.89]
10.85     0.00     0.14       0.271 O       .       .       .       .
   [BASIN DEPTH(FEET) =    1.88]
10.97     0.00     0.14       0.270 O       .       .       .       .
   [BASIN DEPTH(FEET) =    1.87]
11.08     0.00     0.14       0.269 O       .       .       .       .
   [BASIN DEPTH(FEET) =    1.86]
11.20     0.00     0.14       0.267 O       .       .       .       .
   [BASIN DEPTH(FEET) =    1.86]
11.32     0.00     0.14       0.266 O       .       .       .       .
   [BASIN DEPTH(FEET) =    1.85]
11.43     0.00     0.14       0.265 O       .       .       .       .
   [BASIN DEPTH(FEET) =    1.84]
11.55     0.00     0.14       0.263 O       .       .       .       .
   [BASIN DEPTH(FEET) =    1.83]
11.67     0.00     0.14       0.262 O       .       .       .       .
   [BASIN DEPTH(FEET) =    1.82]
```

BASIN 5C
PROPOSED HYDROLOGY

RATIONAL METHOD HYDROGRAPH PROGRAM
COPYRIGHT 1992, 2001 RICK ENGINEERING COMPANY
RUN DATE 10/23/2014

TIME OF CONCENTRATION 8 MIN.
6 HOUR RAINFALL 3.2 INCHES
BASIN AREA 4.5 ACRES
RUNOFF COEFFICIENT 0.71
PEAK DISCHARGE 20.6 CFS

47 INTERVALS
TIME (MIN) = 0 DISCHARGE (CFS) = 0
TIME (MIN) = 8 DISCHARGE (CFS) = 0.6
TIME (MIN) = 16 DISCHARGE (CFS) = 0.6
TIME (MIN) = 24 DISCHARGE (CFS) = 0.6
TIME (MIN) = 32 DISCHARGE (CFS) = 0.6
TIME (MIN) = 40 DISCHARGE (CFS) = 0.7
TIME (MIN) = 48 DISCHARGE (CFS) = 0.7
TIME (MIN) = 56 DISCHARGE (CFS) = 0.7
TIME (MIN) = 64 DISCHARGE (CFS) = 0.7
TIME (MIN) = 72 DISCHARGE (CFS) = 0.7
TIME (MIN) = 80 DISCHARGE (CFS) = 0.8
TIME (MIN) = 88 DISCHARGE (CFS) = 0.8
TIME (MIN) = 96 DISCHARGE (CFS) = 0.8
TIME (MIN) = 104 DISCHARGE (CFS) = 0.9
TIME (MIN) = 112 DISCHARGE (CFS) = 0.9
TIME (MIN) = 120 DISCHARGE (CFS) = 0.9
TIME (MIN) = 128 DISCHARGE (CFS) = 0.9
TIME (MIN) = 136 DISCHARGE (CFS) = 1
TIME (MIN) = 144 DISCHARGE (CFS) = 1
TIME (MIN) = 152 DISCHARGE (CFS) = 1.1
TIME (MIN) = 160 DISCHARGE (CFS) = 1.2
TIME (MIN) = 168 DISCHARGE (CFS) = 1.3
TIME (MIN) = 176 DISCHARGE (CFS) = 1.3
TIME (MIN) = 184 DISCHARGE (CFS) = 1.5
TIME (MIN) = 192 DISCHARGE (CFS) = 1.6
TIME (MIN) = 200 DISCHARGE (CFS) = 1.8
TIME (MIN) = 208 DISCHARGE (CFS) = 1.9
TIME (MIN) = 216 DISCHARGE (CFS) = 2.4
TIME (MIN) = 224 DISCHARGE (CFS) = 2.7
TIME (MIN) = 232 DISCHARGE (CFS) = 3.9
TIME (MIN) = 240 DISCHARGE (CFS) = 4.8
TIME (MIN) = 248 DISCHARGE (CFS) = 20.6

TIME (MIN) = 256 DISCHARGE (CFS) = 3.2
TIME (MIN) = 264 DISCHARGE (CFS) = 2.1
TIME (MIN) = 272 DISCHARGE (CFS) = 1.7
TIME (MIN) = 280 DISCHARGE (CFS) = 1.4
TIME (MIN) = 288 DISCHARGE (CFS) = 1.2
TIME (MIN) = 296 DISCHARGE (CFS) = 1.1
TIME (MIN) = 304 DISCHARGE (CFS) = 1
TIME (MIN) = 312 DISCHARGE (CFS) = 0.9
TIME (MIN) = 320 DISCHARGE (CFS) = 0.8
TIME (MIN) = 328 DISCHARGE (CFS) = 0.8
TIME (MIN) = 336 DISCHARGE (CFS) = 0.7
TIME (MIN) = 344 DISCHARGE (CFS) = 0.7
TIME (MIN) = 352 DISCHARGE (CFS) = 0.7
TIME (MIN) = 360 DISCHARGE (CFS) = 0.6
TIME (MIN) = 368 DISCHARGE (CFS) = 0

```
****************************************************************************
                  HYDRAULICS ELEMENTS - II  PROGRAM PACKAGE

                   STORAGE BASIN HYDROGRAPH ROUTING MODEL
****************************************************************************
         (c) Copyright 1983-2012 Advanced Engineering Software (aes)
             Ver. 19.0  Release Date: 06/01/2012  License ID 1355

                             Analysis prepared by:

                               Fuscoe Engineering
                               6390 Greenwich Dr.
                                   Suite 170
                              San Diego, CA 92122

 ************************** DESCRIPTION OF STUDY **************************
* PROPOSED HYDROLOGY                                                       *
* DETENTION BASIN 5C AT NODE 2083                                          *
* OCTOBER 2014                                                             *
 ***************************************************************************

    FILE NAME: BASIN5C.DAT
    TIME/DATE OF STUDY: 16:00 10/23/2014
===============================================================================
    ENTERED INFORMATION:
-------------------------------------------------------------------------------
    TOTAL NUMBER OF INFLOW HYDROGRAPH INTERVALS =   47
    CONSTANT HYDROGRAPH TIME UNIT(MINUTES) =    8.000
    ASSUMED INITIAL DEPTH(FEET) IN STORAGE BASIN =    0.00
-------------------------------------------------------------------------------
    ENTERED INFLOW HYDROGRAPH ORDINATES(CFS):
    *INTERVAL    FLOW   *INTERVAL    FLOW   *INTERVAL    FLOW   *
    * NUMBER     (CFS)  * NUMBER     (CFS)  * NUMBER     (CFS)  *
    *    1:         0.00*    2:         0.60*    3:         0.60*
    *    4:         0.60*    5:         0.60*    6:         0.70*
    *    7:         0.70*    8:         0.70*    9:         0.70*
    *   10:         0.70*   11:         0.80*   12:         0.80*
    *   13:         0.80*   14:         0.90*   15:         0.90*
    *   16:         0.90*   17:         0.90*   18:         1.00*
    *   19:         1.00*   20:         1.10*   21:         1.20*
    *   22:         1.30*   23:         1.30*   24:         1.50*
    *   25:         1.60*   26:         1.80*   27:         1.90*
    *   28:         2.40*   29:         2.70*   30:         3.90*
    *   31:         4.80*   32:        20.60*   33:         3.20*
    *   34:         2.10*   35:         1.70*   36:         1.40*
    *   37:         1.20*   38:         1.10*   39:         1.00*
    *   40:         0.90*   41:         0.80*   42:         0.80*
    *   43:         0.70*   44:         0.70*   45:         0.70*
    *   46:         0.60*   47:         0.00*
===============================================================================
    DEPTH-VS.-STORAGE AND DEPTH-VS.-DISCHARGE INFORMATION:
-------------------------------------------------------------------------------
    TOTAL NUMBER OF BASIN DEPTH INFORMATION ENTRIES =   7
-------------------------------------------------------------------------------
    *BASIN-DEPTH  STORAGE    OUTFLOW  **BASIN-DEPTH  STORAGE    OUTFLOW  *
    *   (FEET)  (ACRE-FEET)   (CFS)   **   (FEET)  (ACRE-FEET)   (CFS)   *
    *      0.000      0.000      0.000**      1.000      0.228      0.057*
    *      2.000      0.476      0.396**      3.000      0.746     15.310*
    *      4.000      1.039     37.110**      5.000      1.356     41.600*
    *      6.000      1.684     45.340**
****************************************************************************
----------------------------------------------------------------------------
```

```
    INITIAL BASIN DEPTH(FEET) =    0.00
    INITIAL BASIN STORAGE(ACRE-FEET) =       0.00
    INITIAL BASIN OUTFLOW(CFS) =       0.00
-------------------------------------------------------------------------
-------------------------------------------------------------------------
    BASIN STORAGE, OUTFLOW AND DEPTH ROUTING VALUES:
     INTERVAL   {S-O*DT/2}   {S+O*DT/2}
      NUMBER   (ACRE-FEET) (ACRE-FEET)
          1      0.00000     0.00000
          2      0.22769     0.22831
          3      0.47382     0.47818
          4      0.66165     0.83035
          5      0.83454     1.24346
          6      1.12680     1.58520
          7      1.43419     1.93381
    WHERE S=STORAGE(AF);O=OUTFLOW(AF/MIN.);DT=UNIT(MIN.)
-------------------------------------------------------------------------



         *UNIT-HYDROGRAPH STORAGE-BASIN ROUTING*
    NOTE: COMPUTED BASIN DEPTH, OUTFLOW, AND STORAGE QUANTITIES
          OCCUR AT THE GIVEN TIME. BASIN INFLOW VALUES REPRESENT THE
          AVERAGE INFLOW DURING THE RECENT HYDROGRAPH UNIT INTERVAL.

    GRAPH NOTATION: "I"=MEAN UNIT INFLOW; "O"=OUTFLOW AT GIVEN TIME
-------------------------------------------------------------------------
     TIME   INFLOW  OUTFLOW    STORAGE
    (HOURS) (CFS)    (CFS)    (ACRE-FT)  0.      5.     10.     15.     21.
       0.13     0.00     0.00       0.000 O       .       .       .       .
         [BASIN DEPTH(FEET) =    0.00]
       0.27     0.60     0.00       0.007 O       .       .       .       .
         [BASIN DEPTH(FEET) =    0.03]
       0.40     0.60     0.00       0.013 O       .       .       .       .
         [BASIN DEPTH(FEET) =    0.06]
       0.53     0.60     0.00       0.020 O       .       .       .       .
         [BASIN DEPTH(FEET) =    0.09]
       0.67     0.60     0.01       0.026 O       .       .       .       .
         [BASIN DEPTH(FEET) =    0.12]
       0.80     0.70     0.01       0.034 OI      .       .       .       .
         [BASIN DEPTH(FEET) =    0.15]
       0.93     0.70     0.01       0.042 OI      .       .       .       .
         [BASIN DEPTH(FEET) =    0.18]
       1.07     0.70     0.01       0.049 OI      .       .       .       .
         [BASIN DEPTH(FEET) =    0.22]
       1.20     0.70     0.01       0.057 OI      .       .       .       .
         [BASIN DEPTH(FEET) =    0.25]
       1.33     0.70     0.02       0.064 OI      .       .       .       .
         [BASIN DEPTH(FEET) =    0.28]
       1.47     0.80     0.02       0.073 OI      .       .       .       .
         [BASIN DEPTH(FEET) =    0.32]
       1.60     0.80     0.02       0.081 OI      .       .       .       .
         [BASIN DEPTH(FEET) =    0.36]
       1.73     0.80     0.02       0.090 OI      .       .       .       .
         [BASIN DEPTH(FEET) =    0.39]
       1.87     0.90     0.02       0.100 OI      .       .       .       .
         [BASIN DEPTH(FEET) =    0.44]
       2.00     0.90     0.03       0.109 OI      .       .       .       .
         [BASIN DEPTH(FEET) =    0.48]
       2.13     0.90     0.03       0.119 OI      .       .       .       .
         [BASIN DEPTH(FEET) =    0.52]
```

```
2.27     0.90     0.03       0.129 OI      .       .       .       .
  [BASIN DEPTH(FEET) =    0.56]
2.40     1.00     0.03       0.139 OI      .       .       .       .
  [BASIN DEPTH(FEET) =    0.61]
2.53     1.00     0.04       0.150 OI      .       .       .       .
  [BASIN DEPTH(FEET) =    0.66]
2.67     1.10     0.04       0.161 OI      .       .       .       .
  [BASIN DEPTH(FEET) =    0.71]
2.80     1.20     0.04       0.174 OI      .       .       .       .
  [BASIN DEPTH(FEET) =    0.76]
2.93     1.30     0.05       0.188 O I     .       .       .       .
  [BASIN DEPTH(FEET) =    0.82]
3.07     1.30     0.05       0.202 O I     .       .       .       .
  [BASIN DEPTH(FEET) =    0.89]
3.20     1.50     0.05       0.218 O I     .       .       .       .
  [BASIN DEPTH(FEET) =    0.96]
3.33     1.60     0.07       0.235 O I     .       .       .       .
  [BASIN DEPTH(FEET) =    1.03]
3.47     1.80     0.09       0.254 O I     .       .       .       .
  [BASIN DEPTH(FEET) =    1.10]
3.60     1.90     0.12       0.274 O I     .       .       .       .
  [BASIN DEPTH(FEET) =    1.18]
3.73     2.40     0.15       0.298 O  I    .       .       .       .
  [BASIN DEPTH(FEET) =    1.28]
3.87     2.70     0.19       0.326 O   I   .       .       .       .
  [BASIN DEPTH(FEET) =    1.40]
4.00     3.90     0.25       0.367 O     I .       .       .       .
  [BASIN DEPTH(FEET) =    1.56]
4.13     4.80     0.31       0.417 O      I.       .       .       .
  [BASIN DEPTH(FEET) =    1.76]
4.27    20.60     7.33       0.602 .       .  O    .       .       I
  [BASIN DEPTH(FEET) =    2.46]
4.40     3.20     5.40       0.567 .   I   O       .       .       .
  [BASIN DEPTH(FEET) =    2.34]
4.53     2.10     3.86       0.539 .  I O  .       .       .       .
  [BASIN DEPTH(FEET) =    2.23]
4.67     1.70     2.85       0.520 . I O   .       .       .       .
  [BASIN DEPTH(FEET) =    2.16]
4.80     1.40     2.17       0.508 . IO    .       .       .       .
  [BASIN DEPTH(FEET) =    2.12]
4.93     1.20     1.72       0.500 .IO     .       .       .       .
  [BASIN DEPTH(FEET) =    2.09]
5.07     1.10     1.43       0.495 .IO     .       .       .       .
  [BASIN DEPTH(FEET) =    2.07]
5.20     1.00     1.23       0.491 .O      .       .       .       .
  [BASIN DEPTH(FEET) =    2.06]
5.33     0.90     1.08       0.488 .O      .       .       .       .
  [BASIN DEPTH(FEET) =    2.05]
5.47     0.80     0.95       0.486 .O      .       .       .       .
  [BASIN DEPTH(FEET) =    2.04]
5.60     0.80     0.88       0.485 .O      .       .       .       .
  [BASIN DEPTH(FEET) =    2.03]
5.73     0.70     0.80       0.483 .O      .       .       .       .
  [BASIN DEPTH(FEET) =    2.03]
5.87     0.70     0.75       0.482 .O      .       .       .       .
  [BASIN DEPTH(FEET) =    2.02]
6.00     0.70     0.73       0.482 .O      .       .       .       .
  [BASIN DEPTH(FEET) =    2.02]
6.13     0.60     0.67       0.481 IO      .       .       .       .
  [BASIN DEPTH(FEET) =    2.02]
6.27     0.00     0.39       0.475 O       .       .       .       .
  [BASIN DEPTH(FEET) =    2.00]
6.40     0.00     0.39       0.471 O       .       .       .       .
```

```
   [BASIN DEPTH(FEET) =    1.98]
 6.53     0.00     0.38       0.466 O       .       .       .       .
   [BASIN DEPTH(FEET) =    1.96]
 6.67     0.00     0.38       0.462 O       .       .       .       .
   [BASIN DEPTH(FEET) =    1.94]
 6.80     0.00     0.37       0.458 O       .       .       .       .
   [BASIN DEPTH(FEET) =    1.93]
 6.93     0.00     0.37       0.454 O       .       .       .       .
   [BASIN DEPTH(FEET) =    1.91]
 7.07     0.00     0.36       0.450 O       .       .       .       .
   [BASIN DEPTH(FEET) =    1.90]
 7.20     0.00     0.36       0.446 O       .       .       .       .
   [BASIN DEPTH(FEET) =    1.88]
 7.33     0.00     0.35       0.442 O       .       .       .       .
   [BASIN DEPTH(FEET) =    1.86]
 7.47     0.00     0.34       0.438 O       .       .       .       .
   [BASIN DEPTH(FEET) =    1.85]
 7.60     0.00     0.34       0.435 O       .       .       .       .
   [BASIN DEPTH(FEET) =    1.83]
 7.73     0.00     0.33       0.431 O       .       .       .       .
   [BASIN DEPTH(FEET) =    1.82]
 7.87     0.00     0.33       0.427 O       .       .       .       .
   [BASIN DEPTH(FEET) =    1.80]
 8.00     0.00     0.32       0.424 O       .       .       .       .
   [BASIN DEPTH(FEET) =    1.79]
 8.13     0.00     0.32       0.420 O       .       .       .       .
   [BASIN DEPTH(FEET) =    1.77]
 8.27     0.00     0.31       0.417 O       .       .       .       .
   [BASIN DEPTH(FEET) =    1.76]
 8.40     0.00     0.31       0.413 O       .       .       .       .
   [BASIN DEPTH(FEET) =    1.75]
 8.53     0.00     0.31       0.410 O       .       .       .       .
   [BASIN DEPTH(FEET) =    1.73]
 8.67     0.00     0.30       0.406 O       .       .       .       .
   [BASIN DEPTH(FEET) =    1.72]
 8.80     0.00     0.30       0.403 O       .       .       .       .
   [BASIN DEPTH(FEET) =    1.71]
 8.93     0.00     0.29       0.400 O       .       .       .       .
   [BASIN DEPTH(FEET) =    1.69]
 9.07     0.00     0.29       0.397 O       .       .       .       .
   [BASIN DEPTH(FEET) =    1.68]
 9.20     0.00     0.28       0.394 O       .       .       .       .
   [BASIN DEPTH(FEET) =    1.67]
 9.33     0.00     0.28       0.391 O       .       .       .       .
   [BASIN DEPTH(FEET) =    1.66]
 9.47     0.00     0.27       0.387 O       .       .       .       .
   [BASIN DEPTH(FEET) =    1.64]
 9.60     0.00     0.27       0.384 O       .       .       .       .
   [BASIN DEPTH(FEET) =    1.63]
 9.73     0.00     0.27       0.381 O       .       .       .       .
   [BASIN DEPTH(FEET) =    1.62]
 9.87     0.00     0.26       0.379 O       .       .       .       .
   [BASIN DEPTH(FEET) =    1.61]
10.00     0.00     0.26       0.376 O       .       .       .       .
   [BASIN DEPTH(FEET) =    1.60]
10.13     0.00     0.26       0.373 O       .       .       .       .
   [BASIN DEPTH(FEET) =    1.58]
10.27     0.00     0.25       0.370 O       .       .       .       .
   [BASIN DEPTH(FEET) =    1.57]
10.40     0.00     0.25       0.367 O       .       .       .       .
   [BASIN DEPTH(FEET) =    1.56]
10.53     0.00     0.24       0.365 O       .       .       .       .
   [BASIN DEPTH(FEET) =    1.55]
```

```
10.67     0.00     0.24       0.362 O       .       .       .       .
   [BASIN DEPTH(FEET) =    1.54]
10.80     0.00     0.24       0.359 O       .       .       .       .
   [BASIN DEPTH(FEET) =    1.53]
10.93     0.00     0.23       0.357 O       .       .       .       .
   [BASIN DEPTH(FEET) =    1.52]
11.07     0.00     0.23       0.354 O       .       .       .       .
   [BASIN DEPTH(FEET) =    1.51]
11.20     0.00     0.23       0.352 O       .       .       .       .
   [BASIN DEPTH(FEET) =    1.50]
11.33     0.00     0.22       0.349 O       .       .       .       .
   [BASIN DEPTH(FEET) =    1.49]
11.47     0.00     0.22       0.347 O       .       .       .       .
   [BASIN DEPTH(FEET) =    1.48]
11.60     0.00     0.22       0.344 O       .       .       .       .
   [BASIN DEPTH(FEET) =    1.47]
11.73     0.00     0.21       0.342 O       .       .       .       .
   [BASIN DEPTH(FEET) =    1.46]
11.87     0.00     0.21       0.340 O       .       .       .       .
   [BASIN DEPTH(FEET) =    1.45]
12.00     0.00     0.21       0.337 O       .       .       .       .
   [BASIN DEPTH(FEET) =    1.44]
12.13     0.00     0.20       0.335 O       .       .       .       .
   [BASIN DEPTH(FEET) =    1.43]
12.27     0.00     0.20       0.333 O       .       .       .       .
   [BASIN DEPTH(FEET) =    1.42]
12.40     0.00     0.20       0.331 O       .       .       .       .
   [BASIN DEPTH(FEET) =    1.41]
12.53     0.00     0.19       0.329 O       .       .       .       .
   [BASIN DEPTH(FEET) =    1.41]
12.67     0.00     0.19       0.326 O       .       .       .       .
   [BASIN DEPTH(FEET) =    1.40]
12.80     0.00     0.19       0.324 O       .       .       .       .
   [BASIN DEPTH(FEET) =    1.39]
12.93     0.00     0.19       0.322 O       .       .       .       .
   [BASIN DEPTH(FEET) =    1.38]
13.07     0.00     0.18       0.320 O       .       .       .       .
   [BASIN DEPTH(FEET) =    1.37]
13.20     0.00     0.18       0.318 O       .       .       .       .
   [BASIN DEPTH(FEET) =    1.36]
13.33     0.00     0.18       0.316 O       .       .       .       .
   [BASIN DEPTH(FEET) =    1.36]
```

PROPOSED HYDROLOGY
BASIN 5D

RATIONAL METHOD HYDROGRAPH PROGRAM
COPYRIGHT 1992, 2001 RICK ENGINEERING COMPANY
RUN DATE 10/23/2014

TIME OF CONCENTRATION 9 MIN.
6 HOUR RAINFALL 3.2 INCHES
BASIN AREA 4.6 ACRES
RUNOFF COEFFICIENT 0.71
PEAK DISCHARGE 18.63 CFS

42 INTERVALS
TIME (MIN) = 0 DISCHARGE (CFS) = 0
TIME (MIN) = 9 DISCHARGE (CFS) = 0.6
TIME (MIN) = 18 DISCHARGE (CFS) = 0.6
TIME (MIN) = 27 DISCHARGE (CFS) = 0.6
TIME (MIN) = 36 DISCHARGE (CFS) = 0.7
TIME (MIN) = 45 DISCHARGE (CFS) = 0.7
TIME (MIN) = 54 DISCHARGE (CFS) = 0.7
TIME (MIN) = 63 DISCHARGE (CFS) = 0.7
TIME (MIN) = 72 DISCHARGE (CFS) = 0.8
TIME (MIN) = 81 DISCHARGE (CFS) = 0.8
TIME (MIN) = 90 DISCHARGE (CFS) = 0.8
TIME (MIN) = 99 DISCHARGE (CFS) = 0.8
TIME (MIN) = 108 DISCHARGE (CFS) = 0.9
TIME (MIN) = 117 DISCHARGE (CFS) = 0.9
TIME (MIN) = 126 DISCHARGE (CFS) = 1
TIME (MIN) = 135 DISCHARGE (CFS) = 1
TIME (MIN) = 144 DISCHARGE (CFS) = 1.1
TIME (MIN) = 153 DISCHARGE (CFS) = 1.1
TIME (MIN) = 162 DISCHARGE (CFS) = 1.2
TIME (MIN) = 171 DISCHARGE (CFS) = 1.2
TIME (MIN) = 180 DISCHARGE (CFS) = 1.4
TIME (MIN) = 189 DISCHARGE (CFS) = 1.5
TIME (MIN) = 198 DISCHARGE (CFS) = 1.7
TIME (MIN) = 207 DISCHARGE (CFS) = 1.8
TIME (MIN) = 216 DISCHARGE (CFS) = 2.2
TIME (MIN) = 225 DISCHARGE (CFS) = 2.5
TIME (MIN) = 234 DISCHARGE (CFS) = 3.7
TIME (MIN) = 243 DISCHARGE (CFS) = 5.5
TIME (MIN) = 252 DISCHARGE (CFS) = 18.63
TIME (MIN) = 261 DISCHARGE (CFS) = 3
TIME (MIN) = 270 DISCHARGE (CFS) = 2
TIME (MIN) = 279 DISCHARGE (CFS) = 1.6

TIME (MIN) = 288 DISCHARGE (CFS) = 1.3
TIME (MIN) = 297 DISCHARGE (CFS) = 1.1
TIME (MIN) = 306 DISCHARGE (CFS) = 1
TIME (MIN) = 315 DISCHARGE (CFS) = 0.9
TIME (MIN) = 324 DISCHARGE (CFS) = 0.9
TIME (MIN) = 333 DISCHARGE (CFS) = 0.8
TIME (MIN) = 342 DISCHARGE (CFS) = 0.7
TIME (MIN) = 351 DISCHARGE (CFS) = 0.7
TIME (MIN) = 360 DISCHARGE (CFS) = 0.7
TIME (MIN) = 369 DISCHARGE (CFS) = 0

```
****************************************************************************
                  HYDRAULICS ELEMENTS - II  PROGRAM PACKAGE

                   STORAGE BASIN HYDROGRAPH ROUTING MODEL
****************************************************************************
         (c) Copyright 1983-2012 Advanced Engineering Software (aes)
             Ver. 19.0  Release Date: 06/01/2012  License ID 1355

                            Analysis prepared by:

                              Fuscoe Engineering
                              6390 Greenwich Dr.
                                  Suite 170
                             San Diego, CA 92122

 ************************** DESCRIPTION OF STUDY **************************
* PROPOSED HYDROLOGY                                                       *
* DETENTION BASIN 5D AT NODE 2135                                          *
* OCTOBER 2014                                                             *
 ***************************************************************************

    FILE NAME: BASIN5D.DAT
    TIME/DATE OF STUDY: 17:03 10/23/2014
============================================================================
    ENTERED INFORMATION:
----------------------------------------------------------------------------
    TOTAL NUMBER OF INFLOW HYDROGRAPH INTERVALS =   42
    CONSTANT HYDROGRAPH TIME UNIT(MINUTES) =    9.000
    ASSUMED INITIAL DEPTH(FEET) IN STORAGE BASIN =    0.00
----------------------------------------------------------------------------
    ENTERED INFLOW HYDROGRAPH ORDINATES(CFS):
    *INTERVAL    FLOW   *INTERVAL    FLOW   *INTERVAL    FLOW   *
    * NUMBER     (CFS)  * NUMBER     (CFS)  * NUMBER     (CFS)  *
    *    1:         0.00*    2:         0.60*    3:         0.60*
    *    4:         0.60*    5:         0.70*    6:         0.70*
    *    7:         0.70*    8:         0.70*    9:         0.80*
    *   10:         0.80*   11:         0.80*   12:         0.80*
    *   13:         0.90*   14:         0.90*   15:         1.00*
    *   16:         1.00*   17:         1.10*   18:         1.10*
    *   19:         1.20*   20:         1.20*   21:         1.40*
    *   22:         1.50*   23:         1.70*   24:         1.80*
    *   25:         2.20*   26:         2.50*   27:         3.70*
    *   28:         5.50*   29:        18.63*   30:         3.00*
    *   31:         2.00*   32:         1.60*   33:         1.30*
    *   34:         1.10*   35:         1.00*   36:         0.90*
    *   37:         0.90*   38:         0.80*   39:         0.70*
    *   40:         0.70*   41:         0.70*   42:         0.00*
============================================================================
    DEPTH-VS.-STORAGE AND DEPTH-VS.-DISCHARGE INFORMATION:
----------------------------------------------------------------------------
    TOTAL NUMBER OF BASIN DEPTH INFORMATION ENTRIES =   5
----------------------------------------------------------------------------
    *BASIN-DEPTH  STORAGE    OUTFLOW  **BASIN-DEPTH  STORAGE    OUTFLOW  *
    *   (FEET)  (ACRE-FEET)   (CFS)   **   (FEET)  (ACRE-FEET)   (CFS)   *
    *      0.000      0.000      0.000**      1.000      0.120      0.057*
    *      2.000      0.255      0.082**      3.000      0.406      0.920*
    *      4.000      0.574     21.910**
****************************************************************************
----------------------------------------------------------------------------
    INITIAL BASIN DEPTH(FEET) =    0.00
    INITIAL BASIN STORAGE(ACRE-FEET) =       0.00
    INITIAL BASIN OUTFLOW(CFS) =       0.00
```

```
-----------------------------------------------------------------------------
-----------------------------------------------------------------------------
    BASIN STORAGE, OUTFLOW AND DEPTH ROUTING VALUES:
     INTERVAL   {S-O*DT/2}   {S+O*DT/2}
      NUMBER   (ACRE-FEET) (ACRE-FEET)
          1      0.00000     0.00000
          2      0.11965     0.12035
          3      0.25449     0.25551
          4      0.40030     0.41170
          5      0.43819     0.70981
    WHERE S=STORAGE(AF);O=OUTFLOW(AF/MIN.);DT=UNIT(MIN.)
-----------------------------------------------------------------------------



         *UNIT-HYDROGRAPH STORAGE-BASIN ROUTING*
    NOTE: COMPUTED BASIN DEPTH, OUTFLOW, AND STORAGE QUANTITIES
          OCCUR AT THE GIVEN TIME. BASIN INFLOW VALUES REPRESENT THE
          AVERAGE INFLOW DURING THE RECENT HYDROGRAPH UNIT INTERVAL.

    GRAPH NOTATION: "I"=MEAN UNIT INFLOW; "O"=OUTFLOW AT GIVEN TIME
-----------------------------------------------------------------------------
     TIME   INFLOW  OUTFLOW    STORAGE
    (HOURS) (CFS)    (CFS)    (ACRE-FT)  0.      5.      9.     14.     19.
       0.15     0.00     0.00       0.000 O       .       .       .       .
         [BASIN DEPTH(FEET) =    0.00]
       0.30     0.60     0.00       0.007 OI      .       .       .       .
         [BASIN DEPTH(FEET) =    0.06]
       0.45     0.60     0.01       0.015 OI      .       .       .       .
         [BASIN DEPTH(FEET) =    0.12]
       0.60     0.60     0.01       0.022 OI      .       .       .       .
         [BASIN DEPTH(FEET) =    0.18]
       0.75     0.70     0.01       0.031 OI      .       .       .       .
         [BASIN DEPTH(FEET) =    0.26]
       0.90     0.70     0.02       0.039 OI      .       .       .       .
         [BASIN DEPTH(FEET) =    0.33]
       1.05     0.70     0.02       0.048 OI      .       .       .       .
         [BASIN DEPTH(FEET) =    0.40]
       1.20     0.70     0.03       0.056 OI      .       .       .       .
         [BASIN DEPTH(FEET) =    0.47]
       1.35     0.80     0.03       0.065 OI      .       .       .       .
         [BASIN DEPTH(FEET) =    0.55]
       1.50     0.80     0.04       0.075 OI      .       .       .       .
         [BASIN DEPTH(FEET) =    0.62]
       1.65     0.80     0.04       0.084 OI      .       .       .       .
         [BASIN DEPTH(FEET) =    0.70]
       1.80     0.80     0.04       0.094 OI      .       .       .       .
         [BASIN DEPTH(FEET) =    0.78]
       1.95     0.90     0.05       0.104 OI      .       .       .       .
         [BASIN DEPTH(FEET) =    0.87]
       2.10     0.90     0.05       0.115 OI      .       .       .       .
         [BASIN DEPTH(FEET) =    0.96]
       2.25     1.00     0.06       0.127 OI      .       .       .       .
         [BASIN DEPTH(FEET) =    1.05]
       2.40     1.00     0.06       0.138 OI      .       .       .       .
         [BASIN DEPTH(FEET) =    1.14]
       2.55     1.10     0.06       0.151 OI      .       .       .       .
         [BASIN DEPTH(FEET) =    1.23]
       2.70     1.10     0.07       0.164 OI      .       .       .       .
         [BASIN DEPTH(FEET) =    1.33]
       2.85     1.20     0.07       0.178 O I     .       .       .       .
```

```
  [BASIN DEPTH(FEET) =    1.43]
3.00     1.20     0.07       0.192 O I     .       .       .       .
  [BASIN DEPTH(FEET) =    1.53]
3.15     1.40     0.07       0.209 O I     .       .       .       .
  [BASIN DEPTH(FEET) =    1.66]
3.30     1.50     0.08       0.226 O I     .       .       .       .
  [BASIN DEPTH(FEET) =    1.79]
3.45     1.70     0.08       0.246 O I     .       .       .       .
  [BASIN DEPTH(FEET) =    1.94]
3.60     1.80     0.15       0.267 O  I    .       .       .       .
  [BASIN DEPTH(FEET) =    2.08]
3.75     2.20     0.29       0.292 O  I    .       .       .       .
  [BASIN DEPTH(FEET) =    2.24]
3.90     2.50     0.43       0.318 O   I   .       .       .       .
  [BASIN DEPTH(FEET) =    2.42]
4.05     3.70     0.65       0.357 .O    I .       .       .       .
  [BASIN DEPTH(FEET) =    2.68]
4.20     5.50     1.62       0.412 . O     .I      .       .       .
  [BASIN DEPTH(FEET) =    3.03]
4.35    18.63    16.47       0.530 .       .       .       .   O  I.
  [BASIN DEPTH(FEET) =    3.74]
4.50     3.00     4.71       0.436 .    I  O       .       .       .
  [BASIN DEPTH(FEET) =    3.18]
4.65     2.00     2.34       0.417 .  IO   .       .       .       .
  [BASIN DEPTH(FEET) =    3.07]
4.80     1.60     1.69       0.412 . O     .       .       .       .
  [BASIN DEPTH(FEET) =    3.04]
4.95     1.30     1.35       0.409 . O     .       .       .       .
  [BASIN DEPTH(FEET) =    3.02]
5.10     1.10     1.13       0.408 .O      .       .       .       .
  [BASIN DEPTH(FEET) =    3.01]
5.25     1.00     1.02       0.407 .O      .       .       .       .
  [BASIN DEPTH(FEET) =    3.00]
5.40     0.90     0.92       0.406 .O      .       .       .       .
  [BASIN DEPTH(FEET) =    3.00]
5.55     0.90     0.92       0.406 .O      .       .       .       .
  [BASIN DEPTH(FEET) =    3.00]
5.70     0.80     0.91       0.404 .O      .       .       .       .
  [BASIN DEPTH(FEET) =    2.99]
5.85     0.70     0.90       0.402 .O      .       .       .       .
  [BASIN DEPTH(FEET) =    2.97]
6.00     0.70     0.88       0.399 .O      .       .       .       .
  [BASIN DEPTH(FEET) =    2.96]
6.15     0.70     0.87       0.397 .O      .       .       .       .
  [BASIN DEPTH(FEET) =    2.94]
6.30     0.00     0.81       0.387 IO      .       .       .       .
  [BASIN DEPTH(FEET) =    2.87]
6.45     0.00     0.76       0.377 IO      .       .       .       .
  [BASIN DEPTH(FEET) =    2.81]
6.60     0.00     0.71       0.368 IO      .       .       .       .
  [BASIN DEPTH(FEET) =    2.75]
6.75     0.00     0.66       0.359 IO      .       .       .       .
  [BASIN DEPTH(FEET) =    2.69]
6.90     0.00     0.62       0.351 IO      .       .       .       .
  [BASIN DEPTH(FEET) =    2.64]
7.05     0.00     0.58       0.344 O       .       .       .       .
  [BASIN DEPTH(FEET) =    2.59]
7.20     0.00     0.54       0.337 O       .       .       .       .
  [BASIN DEPTH(FEET) =    2.54]
7.35     0.00     0.50       0.331 O       .       .       .       .
  [BASIN DEPTH(FEET) =    2.50]
7.50     0.00     0.47       0.325 O       .       .       .       .
  [BASIN DEPTH(FEET) =    2.46]
```

```
 7.65     0.00     0.44       0.319 O       .       .       .       .
   [BASIN DEPTH(FEET) =    2.42]
 7.80     0.00     0.41       0.314 O       .       .       .       .
   [BASIN DEPTH(FEET) =    2.39]
 7.95     0.00     0.38       0.309 O       .       .       .       .
   [BASIN DEPTH(FEET) =    2.36]
 8.10     0.00     0.36       0.304 O       .       .       .       .
   [BASIN DEPTH(FEET) =    2.33]
 8.25     0.00     0.33       0.300 O       .       .       .       .
   [BASIN DEPTH(FEET) =    2.30]
 8.40     0.00     0.31       0.296 O       .       .       .       .
   [BASIN DEPTH(FEET) =    2.27]
 8.55     0.00     0.29       0.292 O       .       .       .       .
   [BASIN DEPTH(FEET) =    2.25]
 8.70     0.00     0.27       0.289 O       .       .       .       .
   [BASIN DEPTH(FEET) =    2.22]
 8.85     0.00     0.25       0.286 O       .       .       .       .
   [BASIN DEPTH(FEET) =    2.20]
 9.00     0.00     0.24       0.283 O       .       .       .       .
   [BASIN DEPTH(FEET) =    2.18]
 9.15     0.00     0.22       0.280 O       .       .       .       .
   [BASIN DEPTH(FEET) =    2.16]
 9.30     0.00     0.21       0.277 O       .       .       .       .
   [BASIN DEPTH(FEET) =    2.15]
 9.45     0.00     0.19       0.275 O       .       .       .       .
   [BASIN DEPTH(FEET) =    2.13]
 9.60     0.00     0.18       0.272 O       .       .       .       .
   [BASIN DEPTH(FEET) =    2.12]
 9.75     0.00     0.17       0.270 O       .       .       .       .
   [BASIN DEPTH(FEET) =    2.10]
 9.90     0.00     0.16       0.268 O       .       .       .       .
   [BASIN DEPTH(FEET) =    2.09]
10.05     0.00     0.15       0.266 O       .       .       .       .
   [BASIN DEPTH(FEET) =    2.08]
10.20     0.00     0.14       0.265 O       .       .       .       .
   [BASIN DEPTH(FEET) =    2.06]
10.35     0.00     0.13       0.263 O       .       .       .       .
   [BASIN DEPTH(FEET) =    2.05]
10.50     0.00     0.12       0.262 O       .       .       .       .
   [BASIN DEPTH(FEET) =    2.04]
10.65     0.00     0.11       0.260 O       .       .       .       .
   [BASIN DEPTH(FEET) =    2.03]
10.80     0.00     0.10       0.259 O       .       .       .       .
   [BASIN DEPTH(FEET) =    2.03]
10.95     0.00     0.10       0.258 O       .       .       .       .
   [BASIN DEPTH(FEET) =    2.02]
11.10     0.00     0.09       0.256 O       .       .       .       .
   [BASIN DEPTH(FEET) =    2.01]
11.25     0.00     0.08       0.255 O       .       .       .       .
   [BASIN DEPTH(FEET) =    2.00]
11.40     0.00     0.08       0.254 O       .       .       .       .
   [BASIN DEPTH(FEET) =    1.99]
11.55     0.00     0.08       0.253 O       .       .       .       .
   [BASIN DEPTH(FEET) =    1.99]
11.70     0.00     0.08       0.252 O       .       .       .       .
   [BASIN DEPTH(FEET) =    1.98]
11.85     0.00     0.08       0.251 O       .       .       .       .
   [BASIN DEPTH(FEET) =    1.97]
12.00     0.00     0.08       0.250 O       .       .       .       .
   [BASIN DEPTH(FEET) =    1.97]
12.15     0.00     0.08       0.249 O       .       .       .       .
   [BASIN DEPTH(FEET) =    1.96]
12.30     0.00     0.08       0.248 O       .       .       .       .
```

```
   [BASIN DEPTH(FEET) =    1.95]
12.45     0.00     0.08       0.247 O       .       .       .       .
   [BASIN DEPTH(FEET) =    1.94]
12.60     0.00     0.08       0.246 O       .       .       .       .
   [BASIN DEPTH(FEET) =    1.94]
12.75     0.00     0.08       0.245 O       .       .       .       .
   [BASIN DEPTH(FEET) =    1.93]
12.90     0.00     0.08       0.244 O       .       .       .       .
   [BASIN DEPTH(FEET) =    1.92]
13.05     0.00     0.08       0.243 O       .       .       .       .
   [BASIN DEPTH(FEET) =    1.91]
13.20     0.00     0.08       0.242 O       .       .       .       .
   [BASIN DEPTH(FEET) =    1.91]
13.35     0.00     0.08       0.241 O       .       .       .       .
   [BASIN DEPTH(FEET) =    1.90]
13.50     0.00     0.08       0.240 O       .       .       .       .
   [BASIN DEPTH(FEET) =    1.89]
13.65     0.00     0.08       0.239 O       .       .       .       .
   [BASIN DEPTH(FEET) =    1.88]
13.80     0.00     0.08       0.238 O       .       .       .       .
   [BASIN DEPTH(FEET) =    1.88]
13.95     0.00     0.08       0.237 O       .       .       .       .
   [BASIN DEPTH(FEET) =    1.87]
14.10     0.00     0.08       0.236 O       .       .       .       .
   [BASIN DEPTH(FEET) =    1.86]
14.25     0.00     0.08       0.235 O       .       .       .       .
   [BASIN DEPTH(FEET) =    1.86]
14.40     0.00     0.08       0.234 O       .       .       .       .
   [BASIN DEPTH(FEET) =    1.85]
14.55     0.00     0.08       0.234 O       .       .       .       .
   [BASIN DEPTH(FEET) =    1.84]
14.70     0.00     0.08       0.233 O       .       .       .       .
   [BASIN DEPTH(FEET) =    1.83]
14.85     0.00     0.08       0.232 O       .       .       .       .
   [BASIN DEPTH(FEET) =    1.83]
15.00     0.00     0.08       0.231 O       .       .       .       .
   [BASIN DEPTH(FEET) =    1.82]
```

Appendix F

<u>HEC RAS Analysis</u>

Excerpts from Drainage Study for Harmony Grove Village
Valiano Neighborhood 5 100 Year Storm Inundation Exhibit
Background For Mannings Coefficient Selection
Neighborhood 5 Existing Conditions Results
Neighborhood 5 Existing Conditions Cross Sections
Neighborhood 5 Proposed Conditions Results
Neighborhood 5 Proposed Conditions Cross Sections
Valiano Neighborhood 3 100 Year Storm Inundation Exhibit
Neighborhood 3 Proposed Conditions Results
Neighborhood 3 Proposed Conditions Cross Sections
HEC-RAS Files