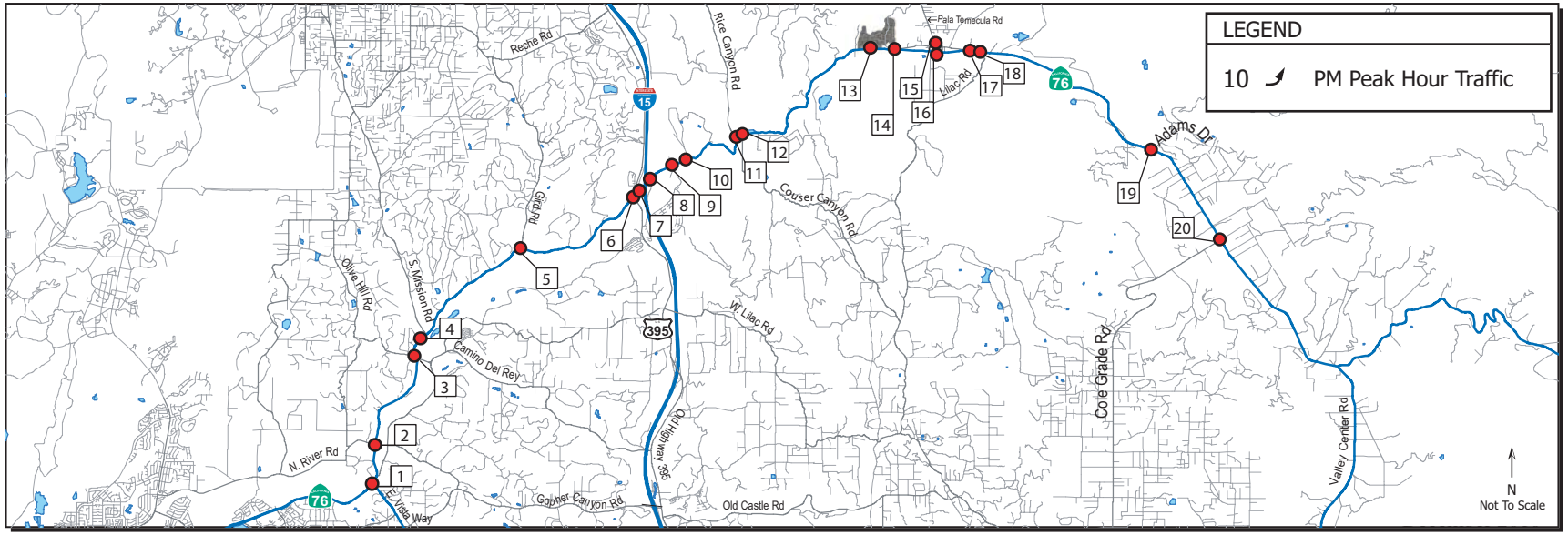

1 — SR 76 & E. Vista Way

15 ← 748 ← 27		↖27 ←7 ↙118
7↗ 11→ 21↘		31↖ 1026→ 201↗

2 — SR 76 & N. River Rd

48 ← 911		
110↗ 51↘		163↗ 1103→

3 — SR 76 & Olive Hill Rd/Camino Del Rey

72 ← 912 ← 61		↖60 ←119 ↙29
133↗ 140→ 62↘		88↗ 1369→ 155↗

4 — SR 76 & S. Mission Rd

321 ← 168		↖106 ←1060
428↗ 1555→		

5 — SR 76 & Gird Rd

49 ← 32		↖52 ←1116
109↗ 1571→		

6 — SR 76 & Old Highway 395

80 ← 121 ← 323		↖331 ←619 ↙104
94↗ 865→ 104↘		147↗ 168→ 76↗

7 — I-15 SB Ramps & SR 76

355 ← 5 ← 229		←550 ↙272
916→ 67↘		

8 — I-15 NB Ramps & SR 76

		↖203 ←398
511↗ 501→		81↗ 6→ 355↗

9 — SR 76 & Pankey Rd

197 ← 447 ← 96		↖72 ←565 ↙69
145↗ 714→ 301↘		301↖ 382→ 108↗

10 — SR 76 & Horse Ranch Creek Rd

307 ← 132		↖117 ←335
346↗ 454→		

11 — SR 76 & Rice Canyon Rd

60 ← 33		↖67 ←692
88↗ 580→		

12 — SR 76 & Couser Canyon Rd

		←623 ↙22
593→ 30↘		36↗ 19↗

13 — SR 76 & Project Drwy

		←629
598→		

14 — SR 76 & West Pala Mission Rd

34 ← 14 ← 14		↖21 ←418 ↙35
48↗ 428→ 65↘		63↗ 10→ 5↗

15 — Pala Mission Rd & Pala Temecula Rd

50 ← 6 ← 55		↖68 ←13
77↗ 12→ 1↘		6↑ 1↗

16 — SR 76 & Brittian Rd

		↖1 ←474
1↗ 384→		

17 — SR 76 & East Pala Mission Rd

1 ← 74		↖82 ←474
1↗ 384→		

18 — SR 76 & Lilac Rd

		←486 ↙36
401→ 42↘		39↗ 32↗

19 — SR 76 & Adams Dr

11 ← 5		↖11 ←487
26↗ 383→		

20 — SR 76 & Cole Grade Rd

4 ← 1		↖1 ←502 ↙32
2↗ 336→ 85↘		82↗ 2→ 34↗

Cumulative Only PM Peak Hour Intersection Volumes

Adopted General Plan ADT Volumes

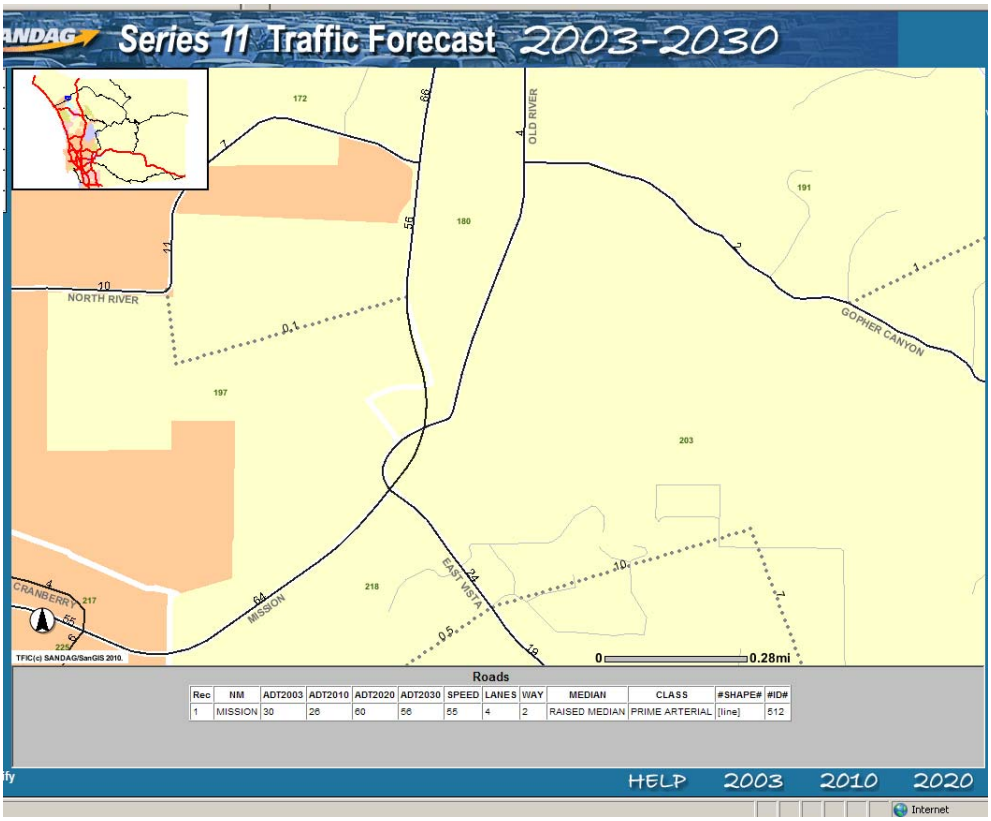

Rec	NM	ADT2003	ADT2010	ADT2020	ADT2030	SPEED	LANES	WAY	MEDIAN	CLASS	#SHAPE#	#ID#
1	MISSION	30	26	60	56	55	4	2	RAISED MEDIAN	PRIME ARTERIAL	[line]	512

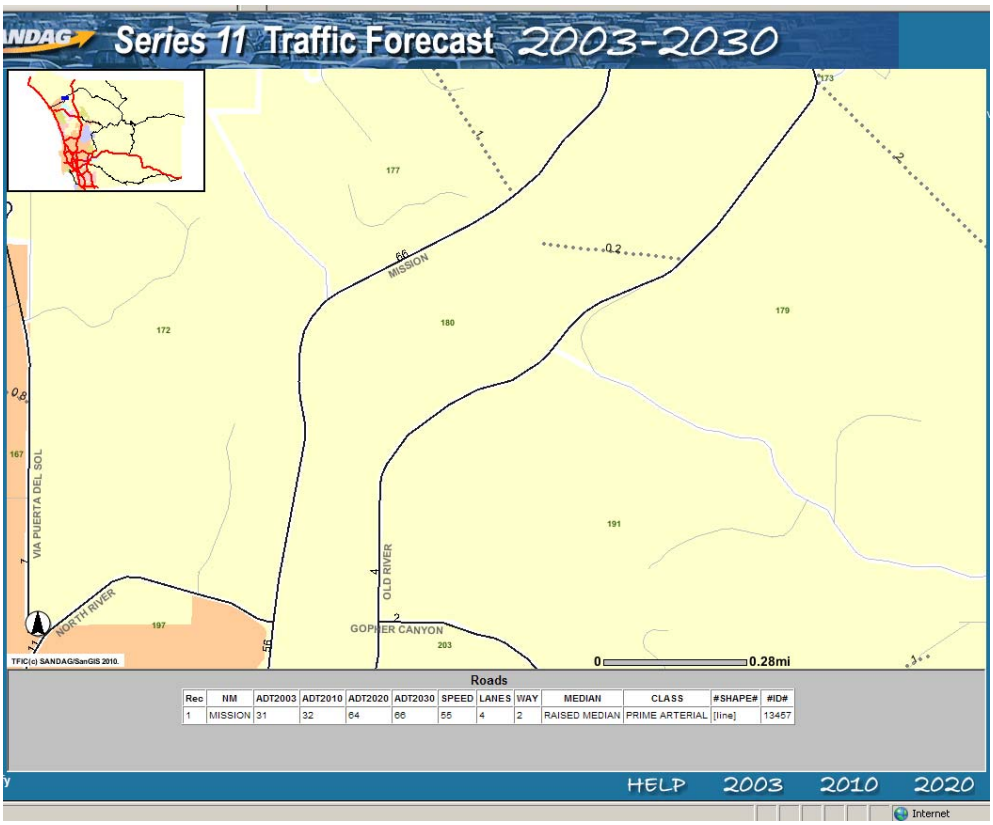

Rec	NM	ADT2003	ADT2010	ADT2020	ADT2030	SPEED	LANES	WAY	MEDIAN	CLASS	#SHAPE#	#ID#
1	MISSION	31	32	64	66	55	4	2	RAISED MEDIAN	PRIME ARTERIAL	[line]	13457

Adopted General Plan ADT Volumes

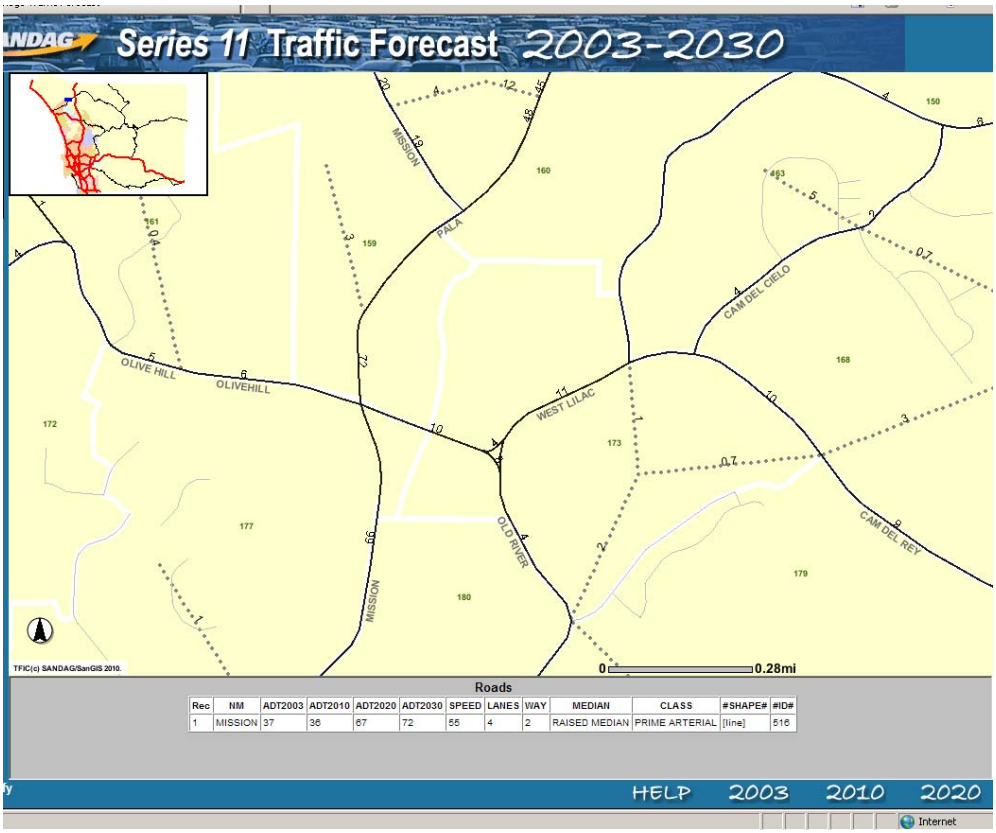

Rec	NM	ADT2003	ADT2010	ADT2020	ADT2030	SPEED	LANES	WAY	MEDIAN	CLASS	#SHAPE#	#ID#
1	MISSION	37	36	67	72	55	4	2	RAISED MEDIAN	PRIME ARTERIAL	[line]	516

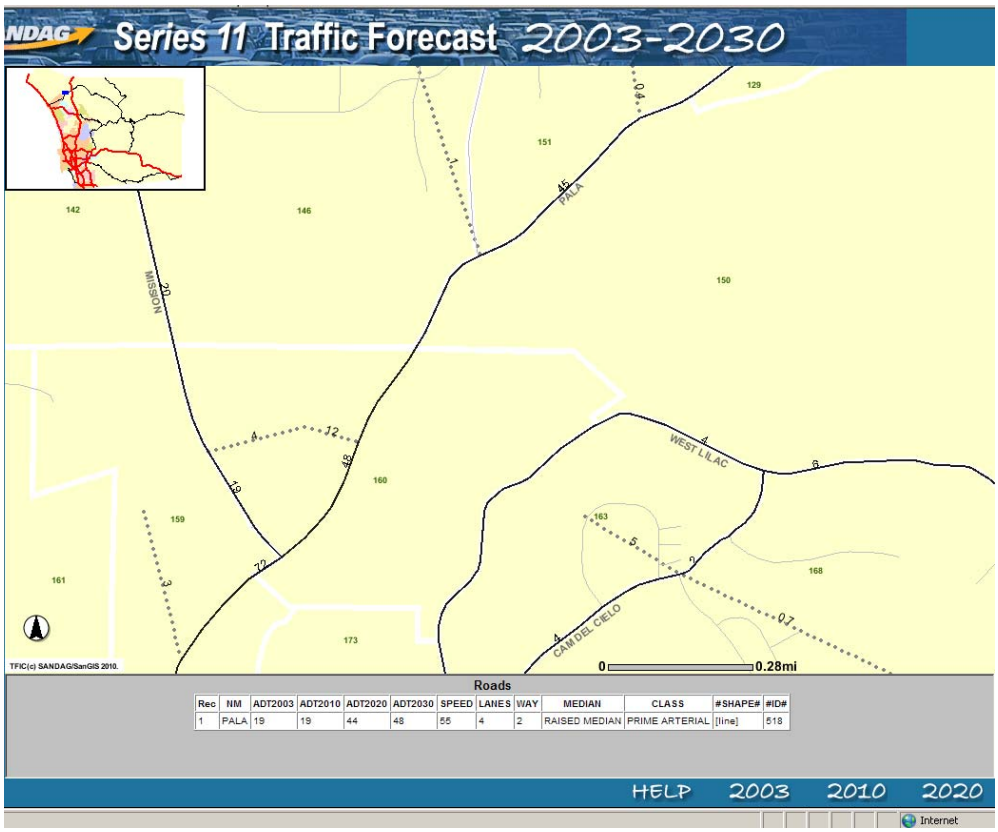

Rec	NM	ADT2003	ADT2010	ADT2020	ADT2030	SPEED	LANES	WAY	MEDIAN	CLASS	#SHAPE#	#ID#
1	PALA	19	19	44	48	55	4	2	RAISED MEDIAN	PRIME ARTERIAL	[line]	518

Adopted General Plan ADT Volumes

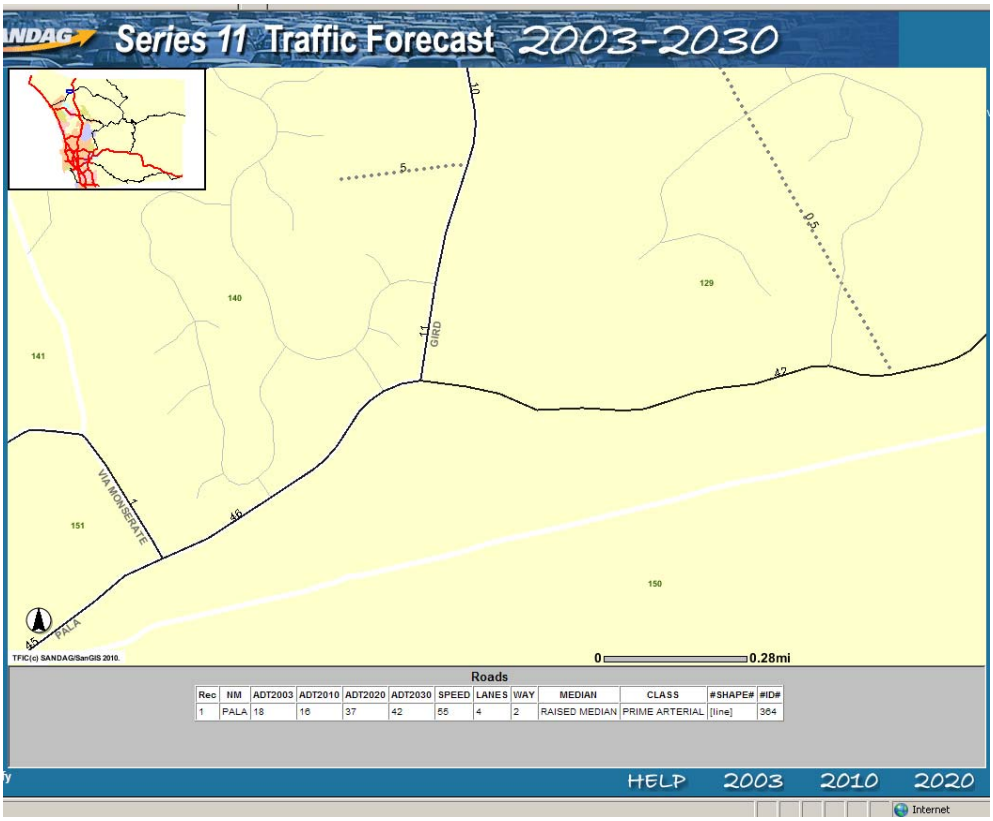

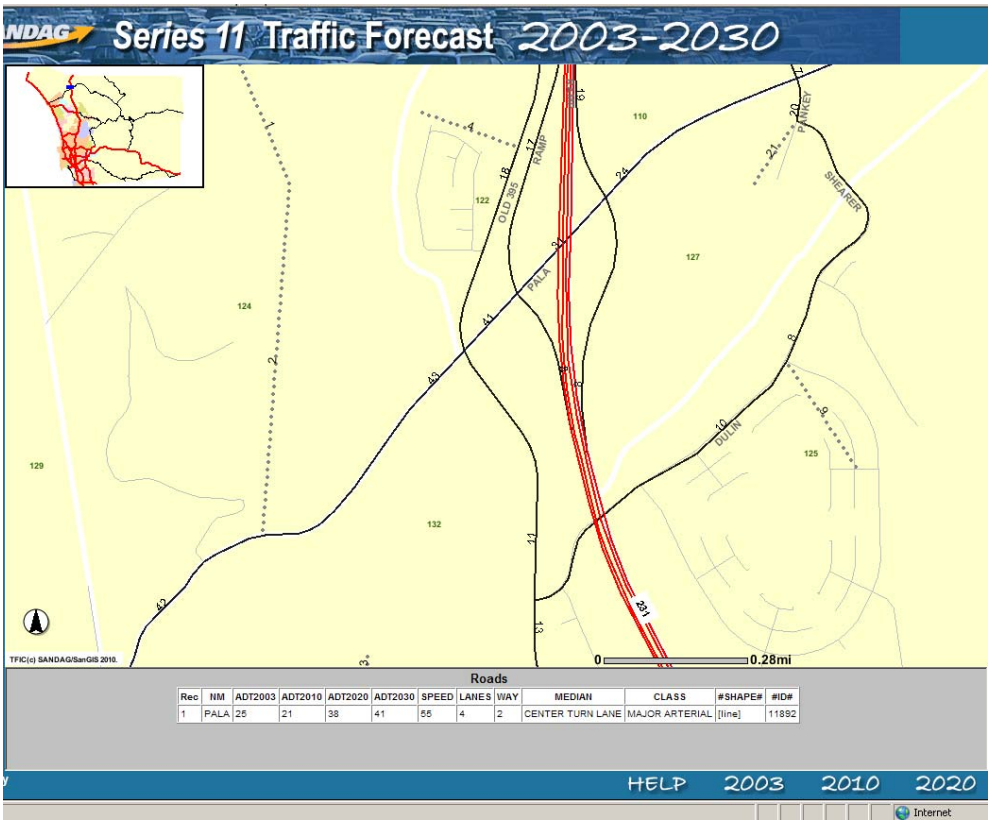

Adopted General Plan ADT Volumes

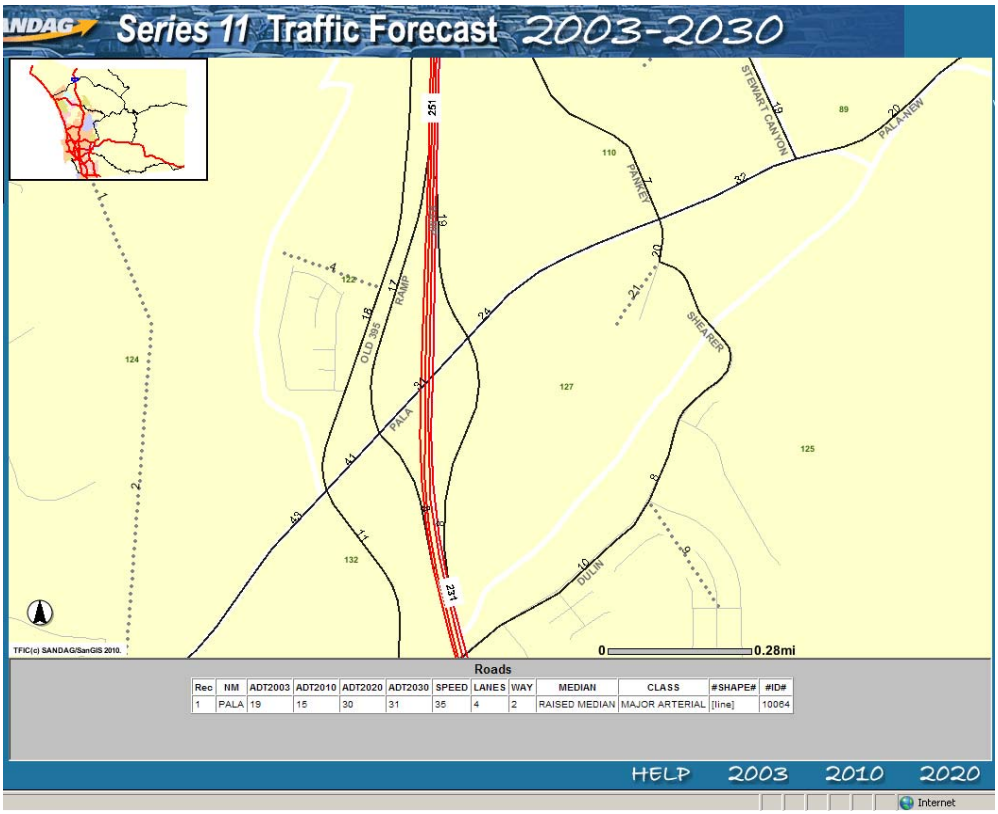

Rec	NM	ADT2003	ADT2010	ADT2020	ADT2030	SPEED	LANES	WAY	MEDIAN	CLASS	#SHAPE#	#ID#
1	PALA	19	15	30	31	35	4	2	RAISED MEDIAN	MAJOR ARTERIAL	[line]	10064

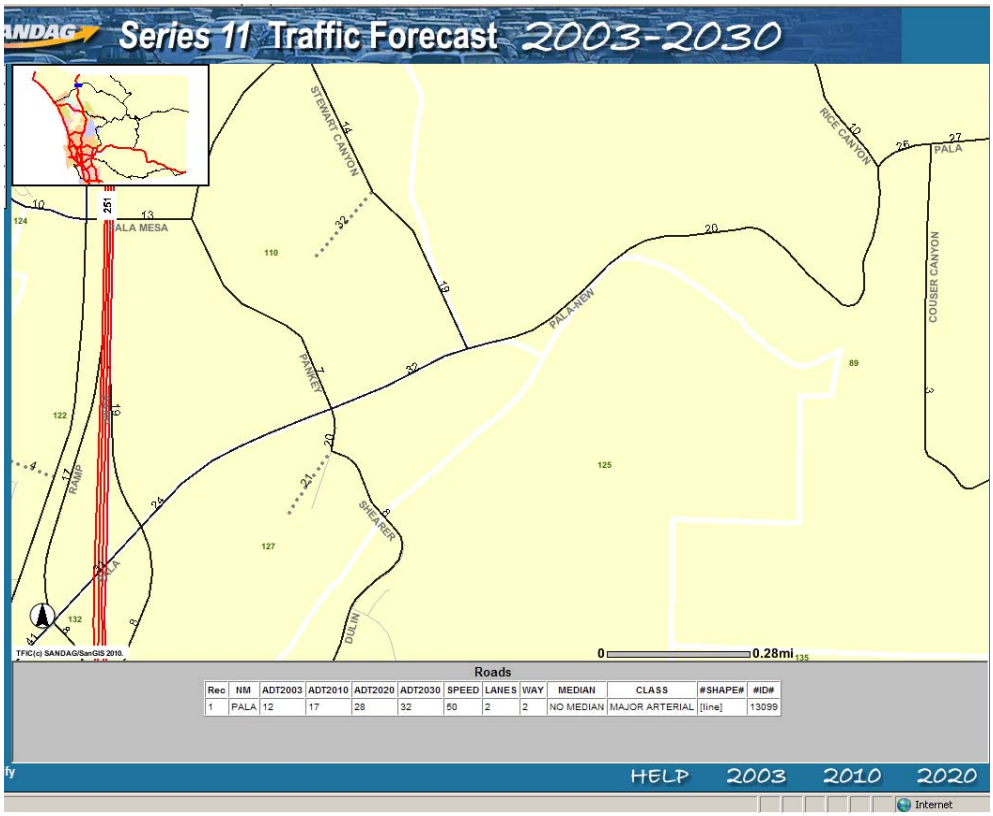

Rec	NM	ADT2003	ADT2010	ADT2020	ADT2030	SPEED	LANES	WAY	MEDIAN	CLASS	#SHAPE#	#ID#
1	PALA	12	17	28	32	50	2	2	NO MEDIAN	MAJOR ARTERIAL	[line]	13099

Adopted General Plan ADT Volumes

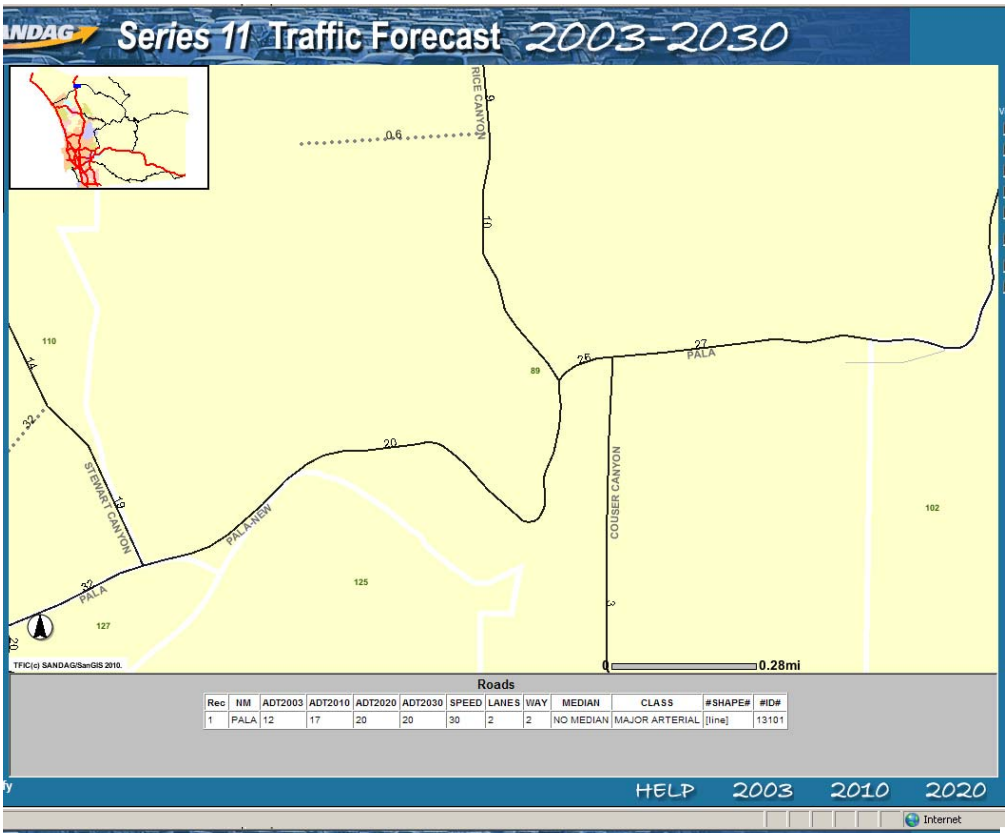

Rec	NM	ADT2003	ADT2010	ADT2020	ADT2030	SPEED	LANES	WAY	MEDIAN	CLASS	#SHAPE#	#ID#
1	PALA	12	17	20	20	30	2	2	NO MEDIAN	MAJOR ARTERIAL	[line]	13101

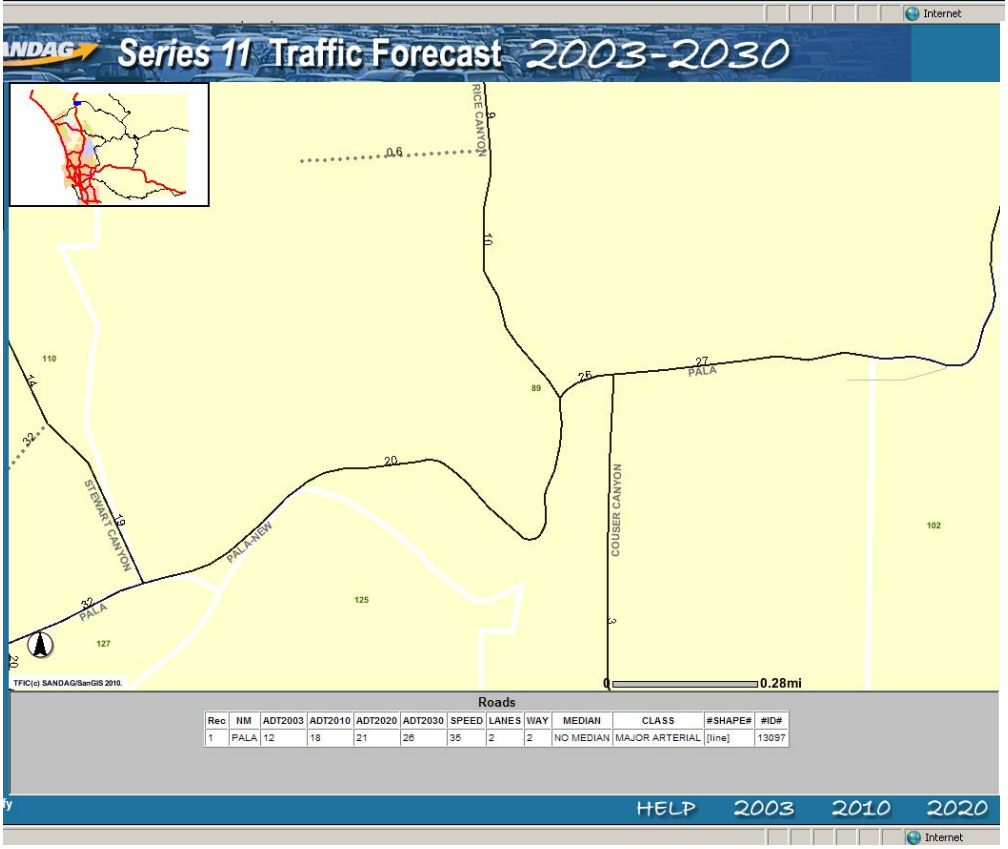

Rec	NM	ADT2003	ADT2010	ADT2020	ADT2030	SPEED	LANES	WAY	MEDIAN	CLASS	#SHAPE#	#ID#
1	PALA	12	18	21	26	35	2	2	NO MEDIAN	MAJOR ARTERIAL	[line]	13097

Adopted General Plan ADT Volumes

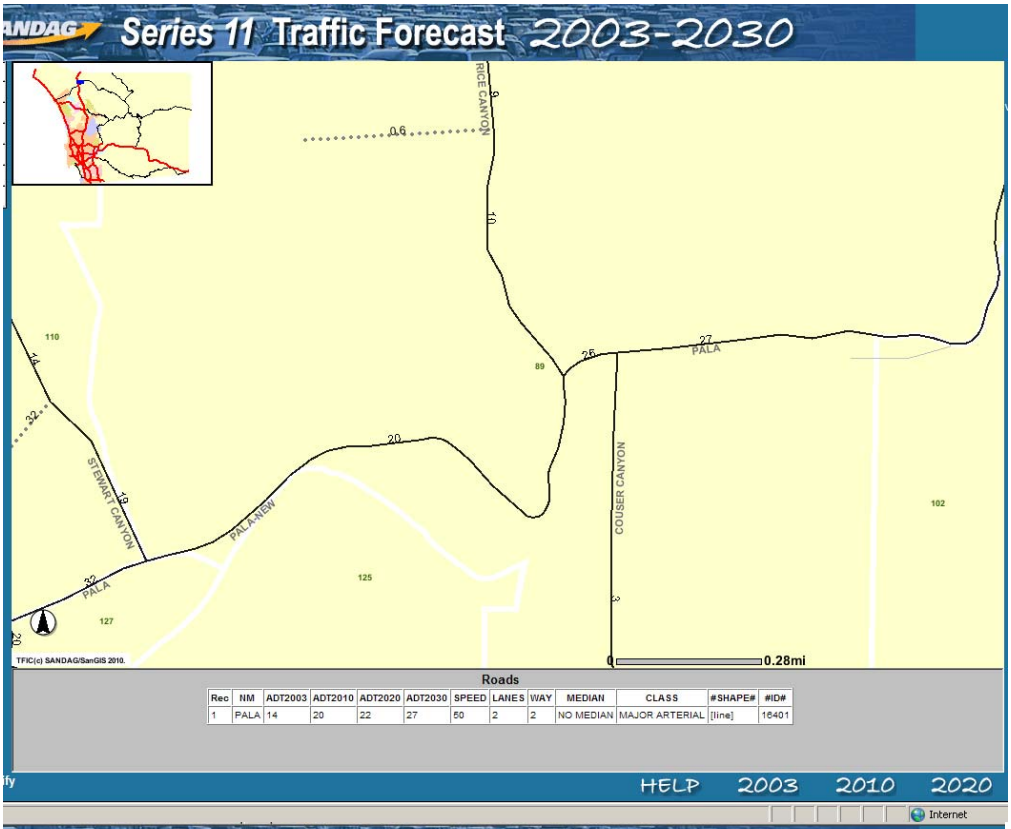

Rec	NM	ADT2003	ADT2010	ADT2020	ADT2030	SPEED	LANES	WAY	MEDIAN	CLASS	#SHAPE#	#ID#
1	PALA	14	20	22	27	50	2	2	NO MEDIAN	MAJOR ARTERIAL	[line]	16401

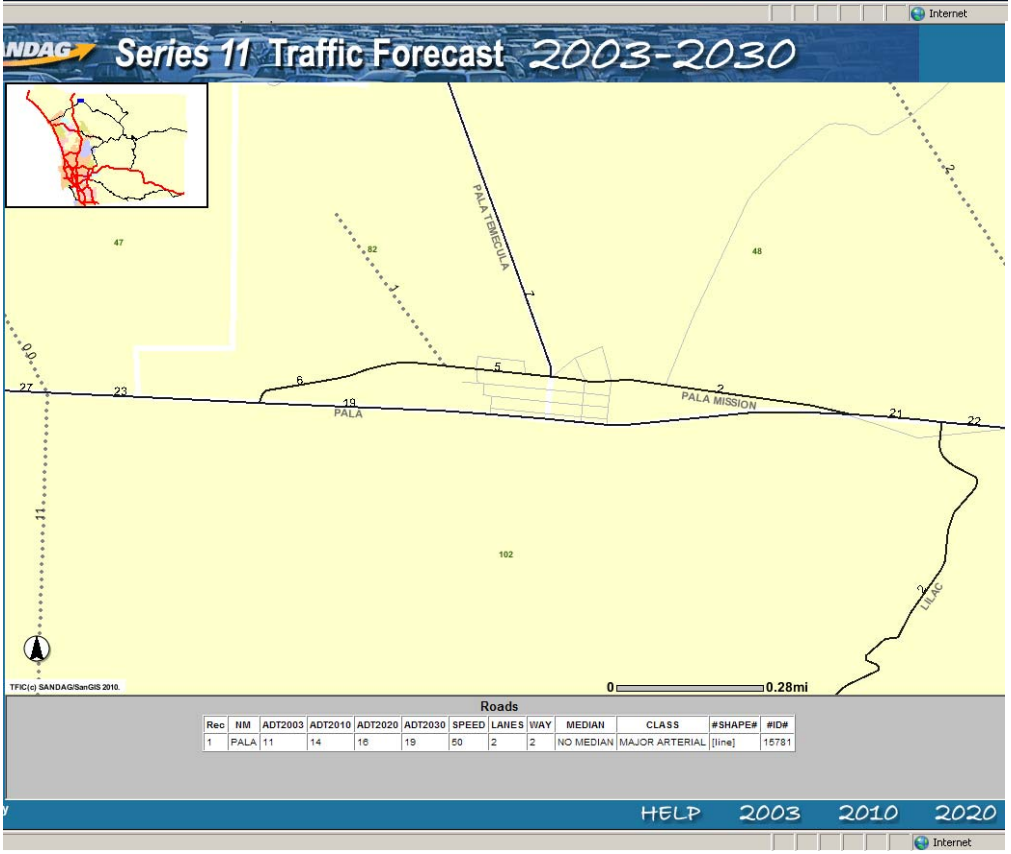

Rec	NM	ADT2003	ADT2010	ADT2020	ADT2030	SPEED	LANES	WAY	MEDIAN	CLASS	#SHAPE#	#ID#
1	PALA	11	14	16	19	50	2	2	NO MEDIAN	MAJOR ARTERIAL	[line]	15781

Adopted General Plan ADT Volumes

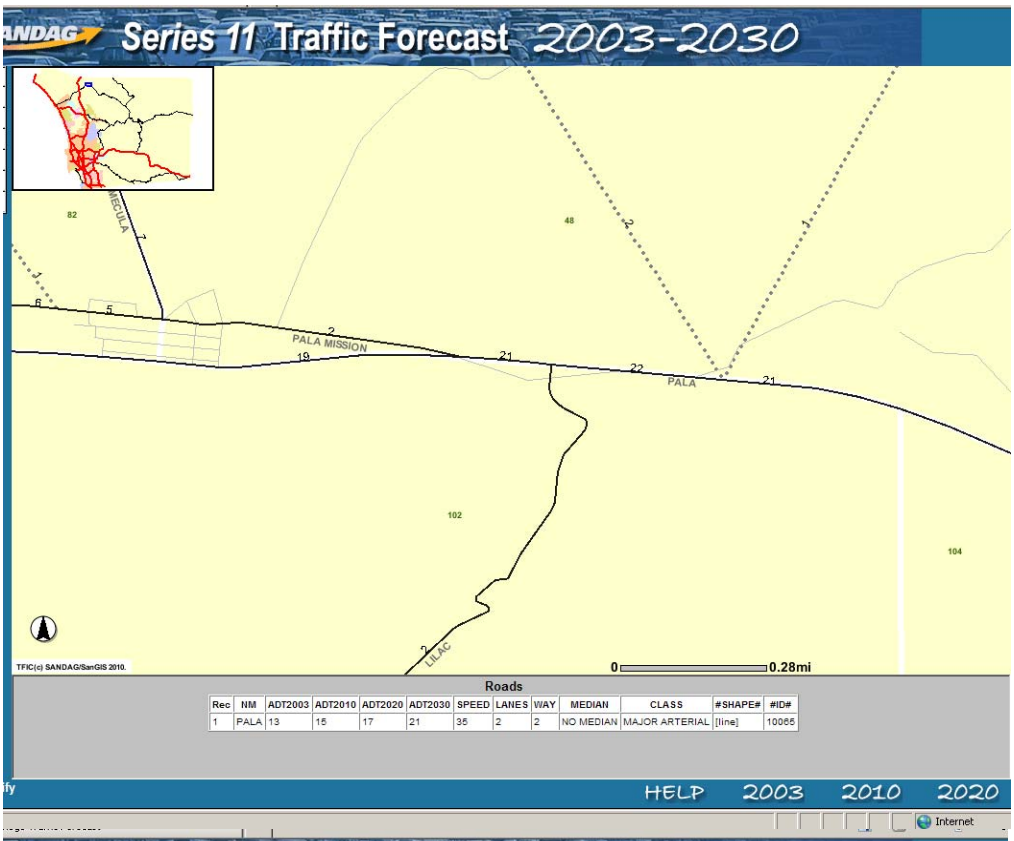

Roads

Rec	NM	ADT2003	ADT2010	ADT2020	ADT2030	SPEED	LANES	WAY	MEDIAN	CLASS	#SHAPE#	#ID#
1	PALA	13	15	17	21	35	2	2	NO MEDIAN	MAJOR ARTERIAL	[line]	10065

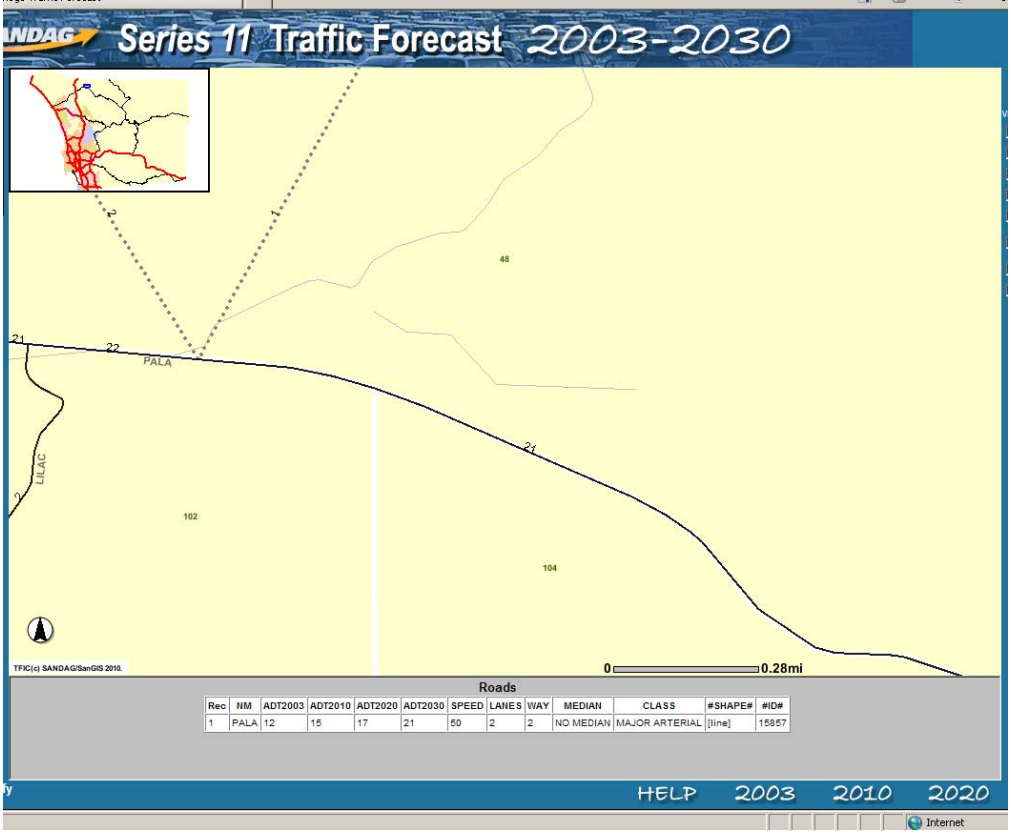

Roads

Rec	NM	ADT2003	ADT2010	ADT2020	ADT2030	SPEED	LANES	WAY	MEDIAN	CLASS	#SHAPE#	#ID#
1	PALA	12	15	17	21	50	2	2	NO MEDIAN	MAJOR ARTERIAL	[line]	15857

Adopted General Plan ADT Volumes

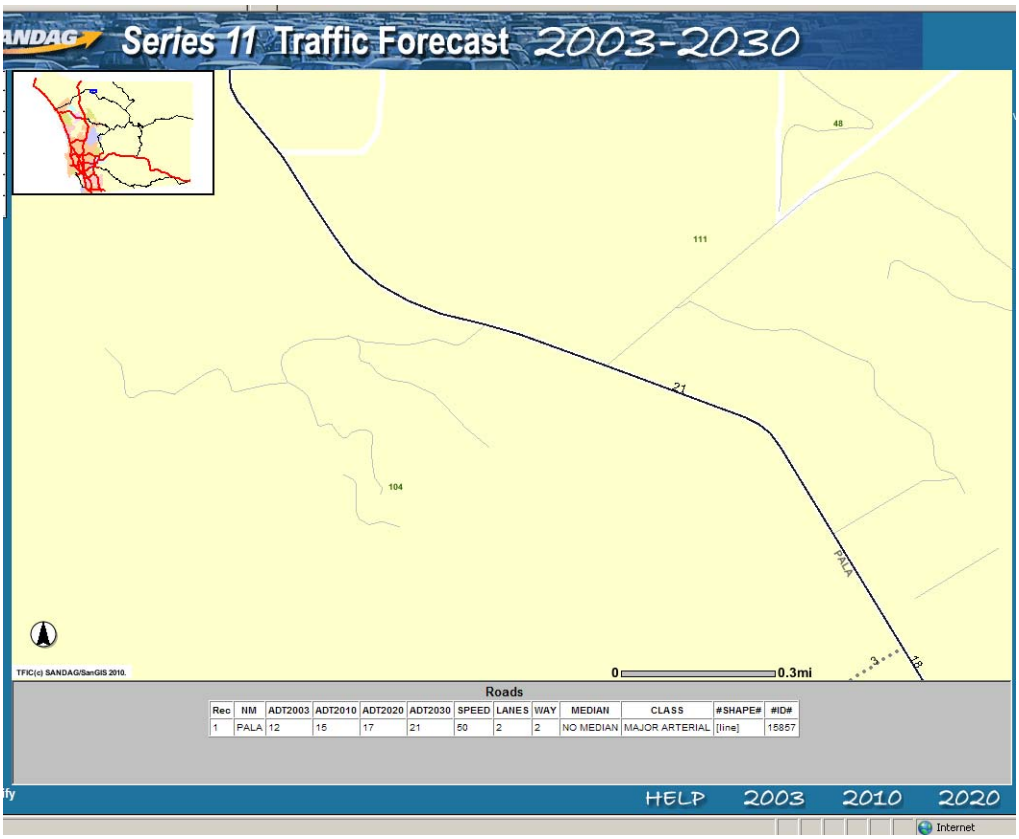

Roads

Rec	NM	ADT2003	ADT2010	ADT2020	ADT2030	SPEED	LANES	WAY	MEDIAN	CLASS	#SHAPE#	#ID#
1	PALA	12	15	17	21	50	2	2	NO MEDIAN	MAJOR ARTERIAL	[line]	15857

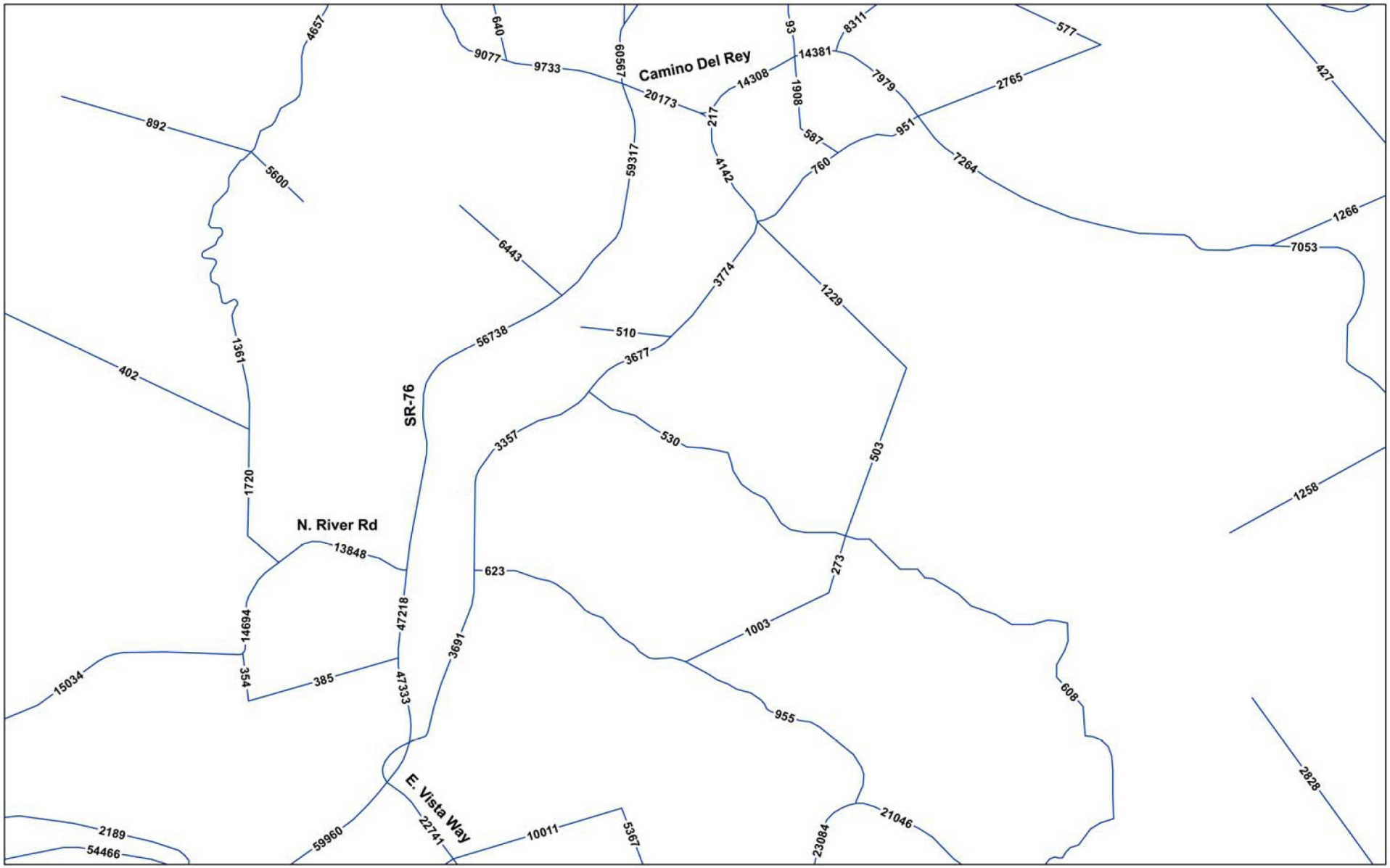

Draft General Plan ADT Volumes

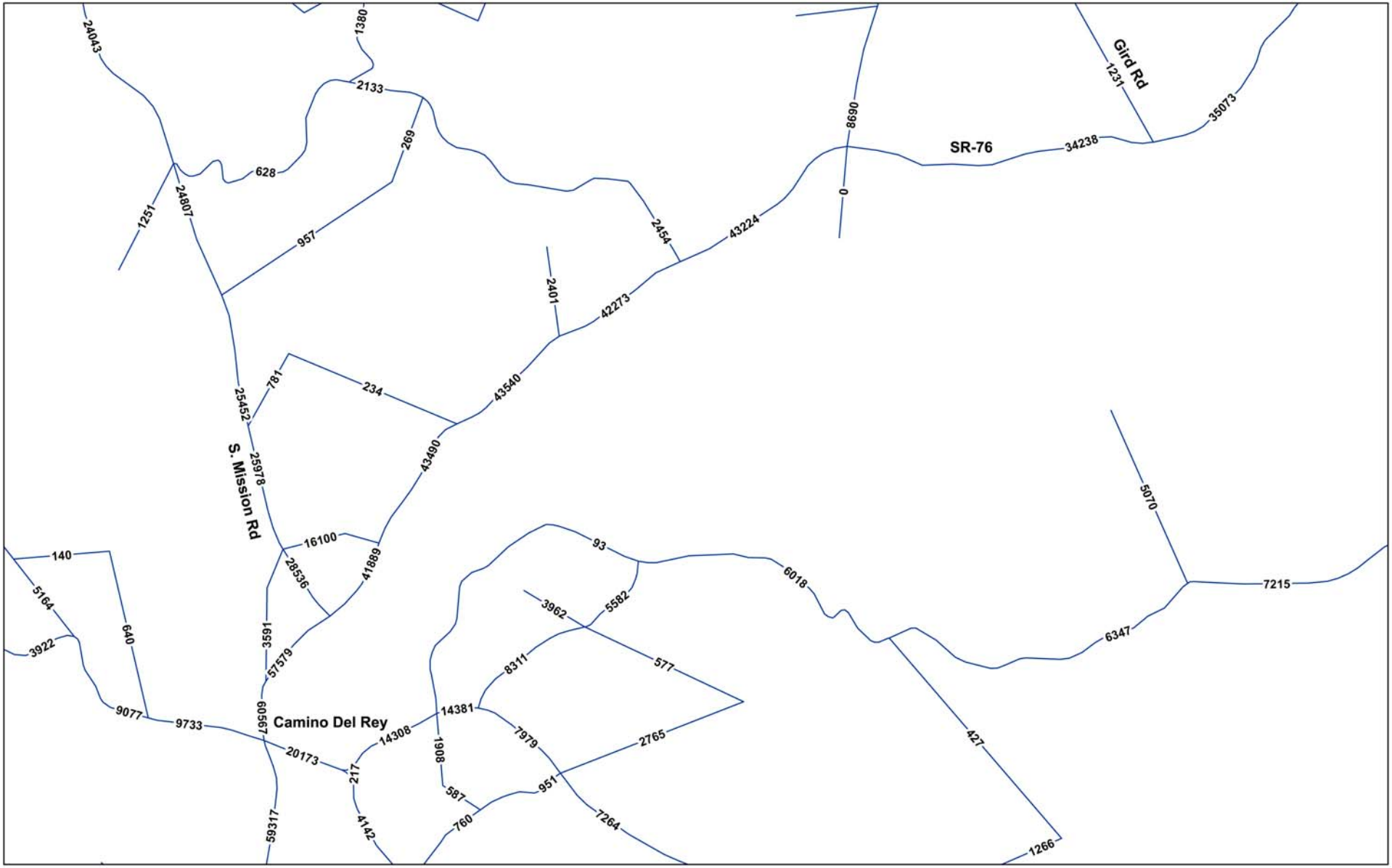

Draft General Plan ADT Volumes

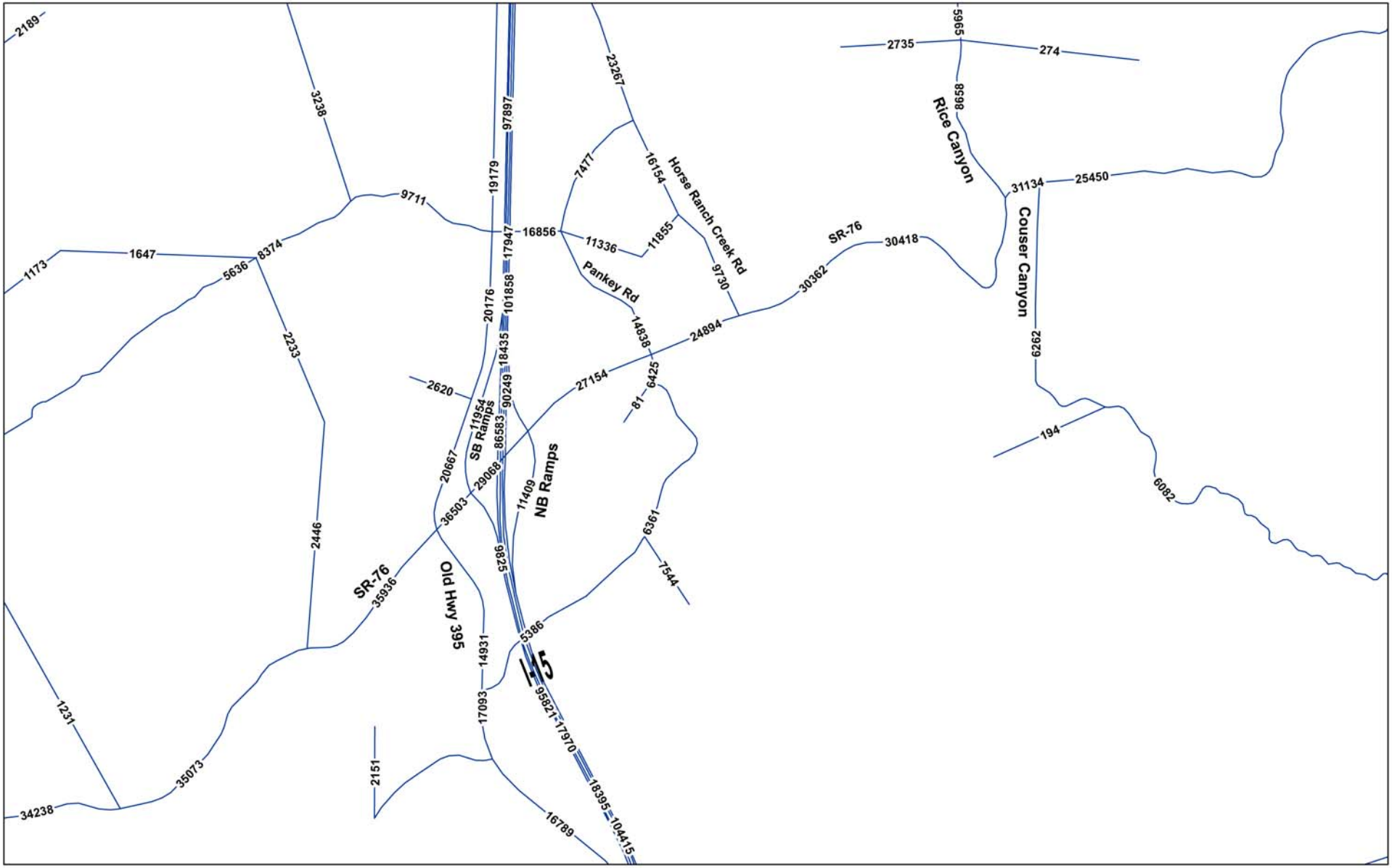

Draft General Plan ADT Volumes

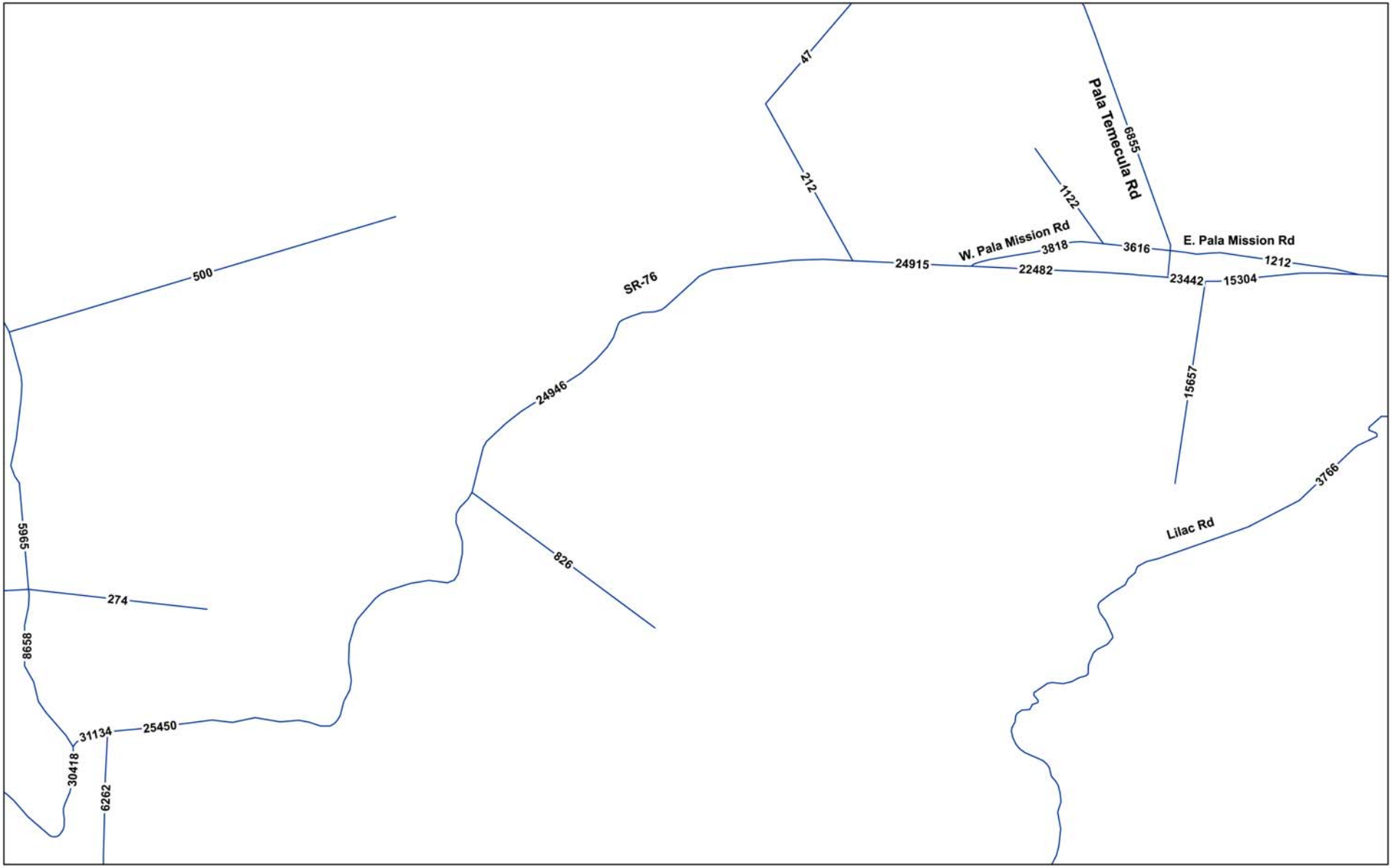

Draft General Plan ADT Volumes

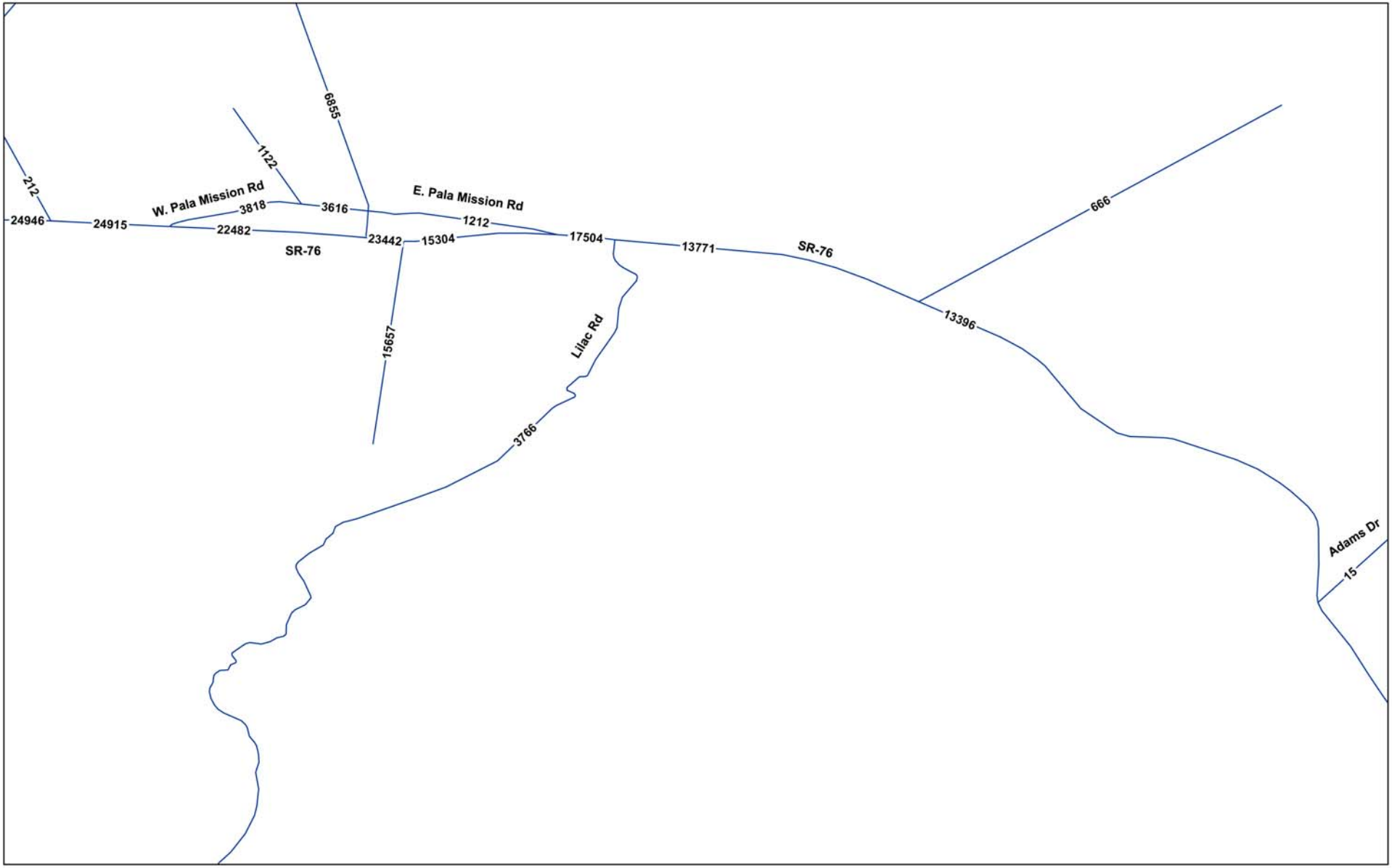

Draft General Plan ADT Volumes

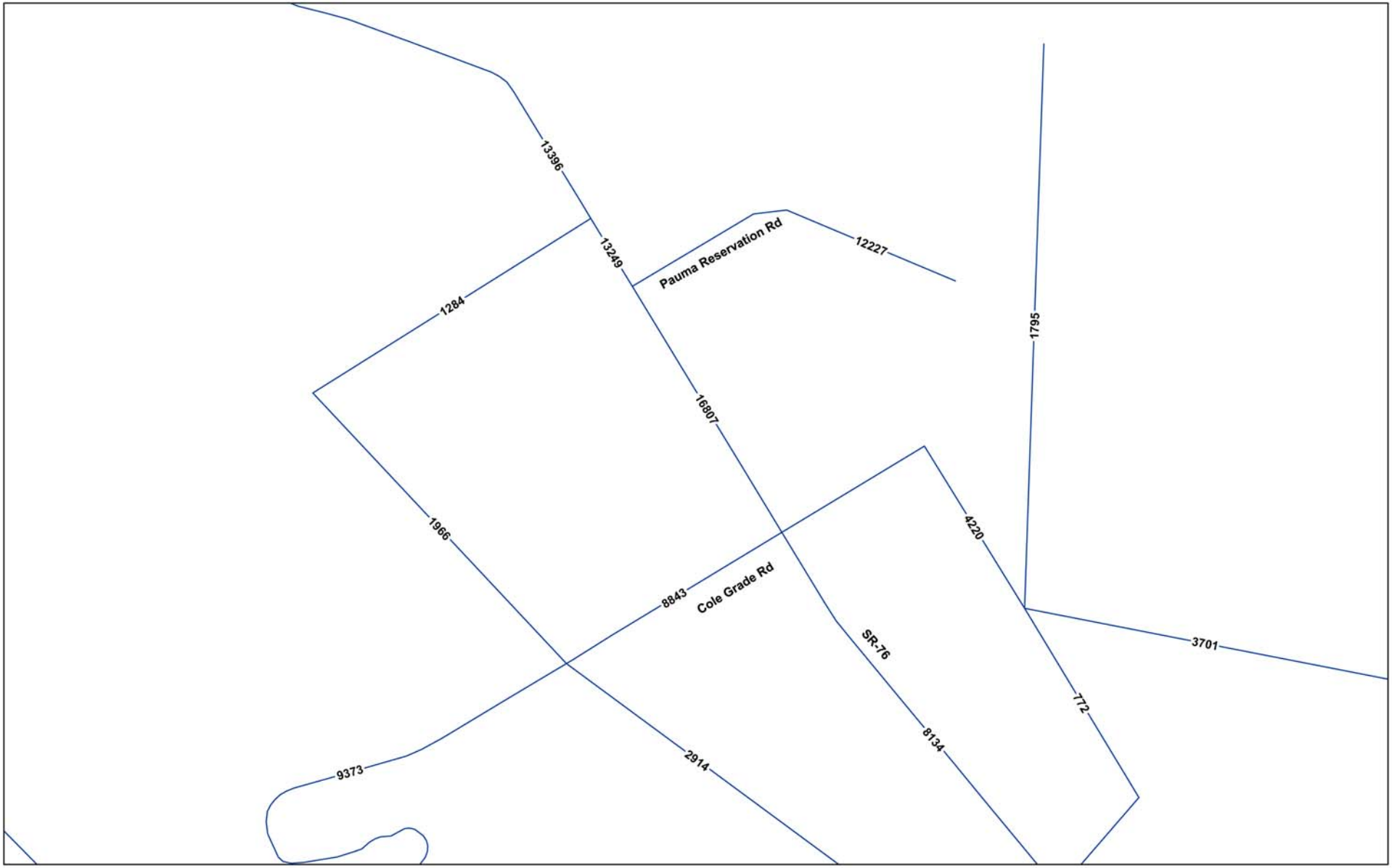

Draft General Plan ADT Volumes

APPENDIX C

TRAFFIC COUNT DATA

MetroCount Traffic Executive
Vehicle Counts

338 -- English (ENU)

Datasets:

Site:	**[1096.01] MISSION RD (NORTH RIVER RD- HOLLY LN) NORTHBOUND**
Direction:	7 - North bound A>B, South bound B>A. **Lane:** 0
Survey Duration:	17:28 Wednesday, December 01, 2010 => 12:01 Friday, December 03, 2010
File:	1096.0103Dec2010.EC0 (Base)
Data type:	Axle sensors - Paired (Class/Speed/Count)

Profile:

Filter time:	**0:00 Thursday, December 02, 2010 => 0:00 Friday, December 03, 2010**
Included classes:	1, 2, 3, 4, 5, 6, 7, 8, 9, 10, 11, 12, 13
Direction:	North (bound)
In profile:	Vehicles = 14506 / 44855 (32.34%)

*** Thursday, December 02, 2010 - Total=14506, 15 minute drops**

0000	0100	0200	0300	0400	0500	0600	0700	0800	0900	1000	1100	1200	1300	1400	1500	1600	1700	1800	1900	2000	2100	2200	2300	
94	**72**	**62**	**49**	**113**	**283**	**682**	**789**	**655**	**672**	**706**	**792**	**825**	**882**	**1009**	**1101**	**1169**	**1111**	**1104**	**748**	**544**	**501**	**358**	**185**	
29	22	16	15	22	46	133	151	**176**	172	181	196	204	217	248	257	276	292	266	210	130	122	89	50	-
22	19	18	6	24	70	152	**221**	168	149	164	183	192	209	260	290	313	274	309	187	152	137	103	61	-
20	19	9	17	34	63	199	**218**	167	172	159	216	217	225	217	277	300	275	287	178	128	139	88	31	-
23	12	19	11	33	104	198	**199**	144	179	202	197	212	231	284	277	280	270	242	173	134	103	78	43	-

AM Peak 0715 - 0815 (814), AM PHF=0.92

MetroCount Traffic Executive
Vehicle Counts

339 -- English (ENU)

Datasets:

Site:	**[1096.01] MISSION RD (NORTH RIVER RD- HOLLY LN) SOUTHBOUND**
Direction:	7 - North bound A>B, South bound B>A. **Lane:** 0
Survey Duration:	17:28 Wednesday, December 01, 2010 => 12:01 Friday, December 03, 2010
File:	1096.0103Dec2010.EC0 (Base)
Data type:	Axle sensors - Paired (Class/Speed/Count)

Profile:

Filter time:	**0:00 Thursday, December 02, 2010 => 0:00 Friday, December 03, 2010**
Included classes:	1, 2, 3, 4, 5, 6, 7, 8, 9, 10, 11, 12, 13
Direction:	South (bound)
In profile:	Vehicles = 14299 / 44855 (31.88%)

*** Thursday, December 02, 2010 - Total=14299, 15 minute drops**

0000	0100	0200	0300	0400	0500	0600	0700	0800	0900	1000	1100	1200	1300	1400	1500	1600	1700	1800	1900	2000	2100	2200	2300	
176	**107**	**93**	**128**	**355**	**841**	**887**	**940**	**1095**	**980**	**854**	**811**	**743**	**793**	**788**	**964**	**908**	**907**	**571**	**401**	**327**	**284**	**196**	**150**	
40	34	27	29	64	155	236	213	**276**	272	205	208	195	190	184	264	239	252	163	115	85	54	51	47	-
42	28	19	25	74	174	216	238	**266**	231	231	205	176	191	205	221	192	209	139	100	92	91	53	37	-
56	24	26	32	98	256	220	231	**269**	237	205	186	195	204	206	220	248	237	137	93	70	79	55	35	-
38	21	21	42	119	256	215	258	**284**	240	213	212	177	208	193	259	229	209	132	93	80	60	37	31	-

AM Peak 0800 - 0900 (1095), AM PHF=0.96

MetroCount Traffic Executive
Event Counts

EventCount-1392 -- English (ENU)

Datasets:

Site:	**[9049.07] HWY-76 (WEST OF OLIVE HILL RD) EASTBOUND**
Input A:	2 - East bound. - Added to totals. (1)
Input B:	0 - Unused or unknown. - Excluded from totals. (0)
Survey Duration:	19:51 Wednesday, June 03, 2009 => 12:23 Friday, June 05, 2009
File:	C:\Users\Gus\True Count\Projects\9049 GOLF GREEN\9049.07.E05Jun2009.EC0 (Regular)
Identifier:	S1339PHE MC56-L5 [MC55] (c)Microcom 19Oct04
Algorithm:	Event Count
Data type:	Axle sensors - Separate (Count)

Profile:

Filter time:	**0:00 Thursday, June 04, 2009 => 0:00 Friday, June 05, 2009**
Name:	TC Default Profile
Scheme:	Count events divided by two.
Units:	Non metric (ft, mi, ft/s, mph, lb, ton)
In profile:	Events = 22711 / 30939 (73.41%)

*** Thursday, June 04, 2009=22710, 15 minute drops**

0000	0100	0200	0300	0400	0500	0600	0700	0800	0900	1000	1100	1200	1300	1400	1500	1600	1700	1800	1900	2000	2100	2200	2300	
146	**85**	**89**	**75**	**133**	**425**	**799**	**1203**	**956**	**963**	**1010**	**1176**	**1182**	**1341**	**1592**	**2004**	**2149**	**2173**	**1561**	**1147**	**973**	**731**	**513**	**284**	
44	28	27	16	29	66	129	248	199	199	271	257	**271**	373	416	506	497	552	487	329	206	180	134	81	-
35	22	24	18	19	82	198	287	292	262	260	277	**324**	283	363	448	512	587	404	301	249	203	139	75	-
37	17	15	18	46	125	223	327	216	255	244	**321**	271	328	399	499	572	569	383	279	258	195	125	64	-
30	18	23	23	39	152	249	341	249	247	235	**321**	316	357	414	551	568	465	287	238	260	153	115	64	-

AM Peak 1130 - 1230 (1237), AM PHF=0.95

MetroCount Traffic Executive
Event Counts

EventCount-1393 -- English (ENU)

Datasets:

Site:	**[9049.07] HWY-76 (WEST OF OLIVE HILL RD) WESTBOUND**
Input A:	4 - West bound. - Added to totals. (1)
Input B:	0 - Unused or unknown. - Excluded from totals. (0)
Survey Duration:	19:50 Wednesday, June 03, 2009 => 12:21 Friday, June 05, 2009
File:	C:\Users\Gus\True Count\Projects\9049 GOLF GREEN\9049.07.W05Jun2009.EC0 (Base)
Identifier:	V289W1MS MC56-L5 [MC55] (c)Microcom 19Oct04
Algorithm:	Event Count
Data type:	Axle sensors - Separate (Count)

Profile:

Filter time:	**0:00 Thursday, June 04, 2009 => 0:00 Friday, June 05, 2009**
Name:	TC Default Profile
Scheme:	Count events divided by two.
Units:	Non metric (ft, mi, ft/s, mph, lb, ton)
In profile:	Events = 17029 / 25858 (65.86%)

*** Thursday, June 04, 2009=17026, 15 minute drops**

0000	0100	0200	0300	0400	0500	0600	0700	0800	0900	1000	1100	1200	1300	1400	1500	1600	1700	1800	1900	2000	2100	2200	2300	
117	**79**	**106**	**131**	**337**	**1011**	**1285**	**1379**	**1149**	**1094**	**910**	**943**	**880**	**902**	**961**	**1060**	**1024**	**977**	**774**	**562**	**471**	**388**	**298**	**188**	
34	24	21	19	49	158	353	**297**	322	250	204	252	203	217	233	252	247	247	229	156	132	101	84	51	-
31	18	22	38	61	245	307	**423**	298	276	240	231	249	208	259	255	257	267	176	140	108	107	73	45	-
25	13	31	30	101	276	326	**406**	273	286	225	256	188	244	231	276	253	244	209	148	129	98	78	43	-
27	24	32	44	126	332	**299**	253	256	282	241	204	240	233	238	277	267	219	160	118	102	82	63	49	-

AM Peak 0645 - 0745 (1425), AM PHF=0.84

MetroCount Traffic Executive
Event Counts

EventCount-1390 -- English (ENU)

Datasets:

Site:	**[9049.06] HWY-76 (OLIVE HILL RD-MISSION RD) EASTBOUND**
Input A:	2 - East bound. - Added to totals. (1)
Input B:	0 - Unused or unknown. - Excluded from totals. (0)
Survey Duration:	20:08 Wednesday, June 03, 2009 => 12:24 Friday, June 05, 2009
File:	C:\Users\Gus\True Count\Projects\9049 GOLF GREEN\9049.06.E05Jun2009.EC0 (Regular)
Identifier:	T5441WJP MC56-L5 [MC55] (c)Microcom 19Oct04
Algorithm:	Event Count
Data type:	Axle sensors - Separate (Count)

Profile:

Filter time:	**0:00 Thursday, June 04, 2009 => 0:00 Friday, June 05, 2009**
Name:	TC Default Profile
Scheme:	Count events divided by two.
Units:	Non metric (ft, mi, ft/s, mph, lb, ton)
In profile:	Events = 19508 / 26627 (73.26%)

*** Thursday, June 04, 2009=19508, 15 minute drops**

0000	0100	0200	0300	0400	0500	0600	0700	0800	0900	1000	1100	1200	1300	1400	1500	1600	1700	1800	1900	2000	2100	2200	2300	
136	**84**	**74**	**66**	**113**	**367**	**704**	**1066**	**969**	**872**	**950**	**1015**	**1066**	**1197**	**1401**	**1593**	**1659**	**1725**	**1362**	**963**	**786**	**644**	**452**	**244**	
36	30	25	15	25	55	122	242	251	201	243	240	**271**	298	346	370	388	418	402	260	193	178	128	71	-
33	24	17	18	18	67	157	275	264	209	260	231	**289**	245	336	366	406	454	348	238	190	175	120	67	-
36	11	12	16	36	105	187	281	226	243	221	**267**	230	312	336	443	417	458	329	233	201	144	110	55	-
31	19	20	17	34	140	238	268	228	219	226	**277**	276	342	383	414	448	395	283	232	202	147	94	51	-

AM Peak 1130 - 1230 (1104), AM PHF=0.96

MetroCount Traffic Executive
Event Counts

EventCount-1391 -- English (ENU)

Datasets:

Site:	**[9049.06] HWY-76 (OLIVE HILL RD-MISSION RD) WESTBOUND**
Input A:	4 - West bound. - Added to totals. (1)
Input B:	0 - Unused or unknown. - Excluded from totals. (0)
Survey Duration:	20:07 Wednesday, June 03, 2009 => 12:26 Friday, June 05, 2009
File:	C:\Users\Gus\True Count\Projects\9049 GOLF GREEN\9049.06.W05Jun2009.EC0 (Base)
Identifier:	V286M0GP MC56-L5 [MC55] (c)Microcom 19Oct04
Algorithm:	Event Count
Data type:	Axle sensors - Separate (Count)

Profile:

Filter time:	**0:00 Thursday, June 04, 2009 => 0:00 Friday, June 05, 2009**
Name:	TC Default Profile
Scheme:	Count events divided by two.
Units:	Non metric (ft, mi, ft/s, mph, lb, ton)
In profile:	Events = 19809 / 29576 (66.98%)

*** Thursday, June 04, 2009=19808, 15 minute drops**

0000	0100	0200	0300	0400	0500	0600	0700	0800	0900	1000	1100	1200	1300	1400	1500	1600	1700	1800	1900	2000	2100	2200	2300	
118	**82**	**108**	**133**	**360**	**1101**	**1589**	**1731**	**1262**	**1176**	**1000**	**1046**	**1006**	**1124**	**1122**	**1262**	**1232**	**1183**	**906**	**666**	**583**	**485**	**328**	**205**	
37	28	23	17	55	174	388	**362**	362	251	229	283	254	265	279	312	312	294	265	182	163	132	93	55	-
34	17	20	39	68	277	395	**418**	329	317	258	259	252	282	279	328	304	302	223	152	152	143	79	52	-
21	10	30	38	99	297	418	**473**	275	297	242	285	245	317	264	314	296	303	230	178	135	117	94	49	-
26	27	35	39	138	353	388	**478**	296	311	271	219	255	260	300	308	320	284	188	154	133	93	62	49	-

AM Peak 0700 - 0800 (1731), AM PHF=0.91

MetroCount Traffic Executive
Event Counts

EventCount-1388 -- English (ENU)

Datasets:

Site:	**[9049.05] HWY-76 (MISSION RD-GIRD RD) EASTBOUND**
Input A:	2 - East bound. - Added to totals. (1)
Input B:	0 - Unused or unknown. - Excluded from totals. (0)
Survey Duration:	20:48 Wednesday, June 03, 2009 => 12:32 Friday, June 05, 2009
File:	C:\Users\Gus\True Count\Projects\9049 GOLF GREEN\9049.05.E05Jun2009.EC0 (Base)
Identifier:	V273S0NX MC56-L5 [MC55] (c)Microcom 19Oct04
Algorithm:	Event Count
Data type:	Axle sensors - Separate (Count)

Profile:

Filter time:	**0:00 Thursday, June 04, 2009 => 0:00 Friday, June 05, 2009**
Name:	TC Default Profile
Scheme:	Count events divided by two.
Units:	Non metric (ft, mi, ft/s, mph, lb, ton)
In profile:	Events = 13974 / 18660 (74.89%)

*** Thursday, June 04, 2009=13973, 15 minute drops**

0000	0100	0200	0300	0400	0500	0600	0700	0800	0900	1000	1100	1200	1300	1400	1500	1600	1700	1800	1900	2000	2100	2200	2300	
83	**56**	**55**	**52**	**98**	**292**	**508**	**719**	**635**	**620**	**677**	**740**	**746**	**877**	**1031**	**1123**	**1182**	**1208**	**1002**	**761**	**568**	**449**	**306**	**185**	
19	20	16	12	18	41	88	146	152	144	178	181	**162**	220	250	255	286	322	317	200	145	137	79	59	-
21	18	15	15	15	60	136	179	158	156	199	168	**201**	191	240	282	294	306	245	179	140	100	83	53	-
26	5	8	14	38	84	127	187	157	173	158	**179**	174	222	256	319	283	313	250	215	148	119	76	38	-
17	13	16	11	27	107	157	207	168	147	142	**212**	209	244	285	267	319	267	190	167	135	93	68	35	-

AM Peak 1130 - 1230 (754), AM PHF=0.89

MetroCount Traffic Executive
Event Counts

EventCount-1389 -- English (ENU)

Datasets:

Site:	**[9049.05] HWY-76 (MISSION RD-GIRD RD) WESTBOUND**
Input A:	4 - West bound. - Added to totals. (1)
Input B:	0 - Unused or unknown. - Excluded from totals. (0)
Survey Duration:	20:46 Wednesday, June 03, 2009 => 12:32 Friday, June 05, 2009
File:	C:\Users\Gus\True Count\Projects\9049 GOLF GREEN\9049.05.W05Jun2009.EC0 (Regular)
Identifier:	S014F2C9 MC56-L5 [MC55] (c)Microcom 19Oct04
Algorithm:	Event Count
Data type:	Axle sensors - Separate (Count)

Profile:

Filter time:	**0:00 Thursday, June 04, 2009 => 0:00 Friday, June 05, 2009**
Name:	TC Default Profile
Scheme:	Count events divided by two.
Units:	Non metric (ft, mi, ft/s, mph, lb, ton)
In profile:	Events = 12779 / 18576 (68.79%)

*** Thursday, June 04, 2009=12779, 15 minute drops**

0000	0100	0200	0300	0400	0500	0600	0700	0800	0900	1000	1100	1200	1300	1400	1500	1600	1700	1800	1900	2000	2100	2200	2300	
114	**75**	**96**	**107**	**261**	**751**	**988**	**1030**	**742**	**716**	**645**	**692**	**650**	**703**	**760**	**796**	**792**	**764**	**591**	**432**	**381**	**306**	**232**	**155**	
36	23	23	16	43	117	249	**222**	151	161	140	173	170	163	176	166	197	214	182	126	109	78	55	37	-
32	16	16	23	48	186	256	**260**	206	191	179	165	152	165	177	212	199	160	127	104	99	88	51	36	-
20	12	25	35	69	195	251	**284**	187	172	155	191	170	190	190	203	199	198	169	113	94	81	64	42	-
26	24	32	33	101	253	232	**264**	198	192	171	163	158	185	217	215	197	192	113	89	79	59	62	40	-

AM Peak 0700 - 0800 (1030), AM PHF=0.91

MetroCount Traffic Executive
Event Counts

EventCount-1386 -- English (ENU)

Datasets:

Site:	**[9049.02] HWY-76 (GIRD RD-OLD HWY-395) EASTBOUND**
Input A:	2 - East bound. - Added to totals. (1)
Input B:	0 - Unused or unknown. - Excluded from totals. (0)
Survey Duration:	21:12 Wednesday, June 03, 2009 => 12:28 Friday, June 05, 2009
File:	C:\Users\Gus\True Count\Projects\9049 GOLF GREEN\9049.02.E05Jun2009.EC0 (Regular)
Identifier:	T5450FAN MC56-L5 [MC55] (c)Microcom 19Oct04
Algorithm:	Event Count
Data type:	Axle sensors - Separate (Count)

Profile:

Filter time:	**0:00 Thursday, June 04, 2009 => 0:00 Friday, June 05, 2009**
Name:	TC Default Profile
Scheme:	Count events divided by two.
Units:	Non metric (ft, mi, ft/s, mph, lb, ton)
In profile:	Events = 11939 / 15645 (76.31%)

*** Thursday, June 04, 2009=11938, 15 minute drops**

0000	0100	0200	0300	0400	0500	0600	0700	0800	0900	1000	1100	1200	1300	1400	1500	1600	1700	1800	1900	2000	2100	2200	2300	
82	**61**	**51**	**59**	**103**	**296**	**512**	**678**	**605**	**582**	**638**	**653**	**621**	**703**	**820**	**941**	**974**	**1020**	**790**	**538**	**452**	**348**	**245**	**166**	
19	17	11	15	21	40	87	141	**170**	129	152	142	154	194	214	224	233	256	233	119	113	91	55	59	-
25	23	17	14	13	64	128	**162**	149	155	181	165	147	177	185	238	235	271	208	163	101	83	84	41	-
16	5	11	19	22	91	136	**200**	151	163	160	171	158	162	192	247	263	265	183	134	144	89	59	34	-
22	16	12	11	47	101	161	**175**	135	135	145	175	162	170	229	232	243	228	166	122	94	85	47	32	-

AM Peak 0715 - 0815 (707), AM PHF=0.88

MetroCount Traffic Executive
Event Counts

EventCount-1387 -- English (ENU)

Datasets:

Site:	**[9049.02] HWY-76 (GIRD RD-OLD HWY-395) WESTBOUND**
Input A:	4 - West bound. - Added to totals. (1)
Input B:	0 - Unused or unknown. - Excluded from totals. (0)
Survey Duration:	21:10 Wednesday, June 03, 2009 => 12:28 Friday, June 05, 2009
File:	C:\Users\Gus\True Count\Projects\9049 GOLF GREEN\9049.02.W05Jun2009.EC0 (Regular)
Identifier:	T54701F7 MC56-L5 [MC55] (c)Microcom 19Oct04
Algorithm:	Event Count
Data type:	Axle sensors - Separate (Count)

Profile:

Filter time:	**0:00 Thursday, June 04, 2009 => 0:00 Friday, June 05, 2009**
Name:	TC Default Profile
Scheme:	Count events divided by two.
Units:	Non metric (ft, mi, ft/s, mph, lb, ton)
In profile:	Events = 11851 / 16884 (70.19%)

*** Thursday, June 04, 2009=11851, 15 minute drops**

0000	0100	0200	0300	0400	0500	0600	0700	0800	0900	1000	1100	1200	1300	1400	1500	1600	1700	1800	1900	2000	2100	2200	2300	
107	**80**	**93**	**118**	**252**	**716**	**907**	**807**	**662**	**606**	**556**	**603**	**570**	**641**	**717**	**732**	**789**	**758**	**599**	**442**	**385**	**291**	**247**	**173**	
35	24	17	19	35	132	**221**	182	145	143	110	165	134	145	151	146	175	195	169	119	104	67	58	34	-
25	12	22	22	45	164	**234**	225	191	148	149	148	137	162	192	201	198	182	162	114	112	85	63	48	-
27	22	30	37	76	192	**234**	203	147	169	152	133	166	178	188	176	214	195	149	119	79	77	59	38	-
20	22	24	40	96	**228**	218	197	179	146	145	157	133	156	186	209	202	186	119	90	90	62	67	53	-

AM Peak 0545 - 0645 (917), AM PHF=0.98

MetroCount Traffic Executive
Event Counts

EventCount-1384 -- English (ENU)

Datasets:

Site:	**[9049.01] HWY-76 (OLD HWY-395-I-15) EASTBOUND**
Input A:	2 - East bound. - Added to totals. (1)
Input B:	0 - Unused or unknown. - Excluded from totals. (0)
Survey Duration:	21:32 Wednesday, June 03, 2009 => 12:35 Friday, June 05, 2009
File:	C:\Users\Gus\True Count\Projects\9049 GOLF GREEN\9049.01.E05Jun2009.EC0 (Regular)
Identifier:	R513P5FW MC56-L5 [MC55] (c)Microcom 19Oct04
Algorithm:	Event Count
Data type:	Axle sensors - Separate (Count)

Profile:

Filter time:	**0:00 Thursday, June 04, 2009 => 0:00 Friday, June 05, 2009**
Name:	TC Default Profile
Scheme:	Count events divided by two.
Units:	Non metric (ft, mi, ft/s, mph, lb, ton)
In profile:	Events = 14673 / 19098 (76.83%)

*** Thursday, June 04, 2009=14672, 15 minute drops**

0000	0100	0200	0300	0400	0500	0600	0700	0800	0900	1000	1100	1200	1300	1400	1500	1600	1700	1800	1900	2000	2100	2200	2300	
108	**70**	**71**	**74**	**145**	**395**	**732**	**931**	**821**	**809**	**828**	**848**	**810**	**898**	**929**	**1152**	**1107**	**1167**	**820**	**608**	**474**	**397**	**282**	**196**	
28	19	17	19	28	58	153	189	**220**	187	185	188	214	236	226	252	282	307	229	147	135	101	65	62	-
30	20	19	14	24	96	181	**221**	212	189	230	214	182	257	235	287	256	304	221	173	103	99	93	47	-
24	11	16	24	36	114	209	**263**	210	246	222	228	211	205	223	314	299	277	189	155	135	96	67	44	-
26	20	19	17	57	127	189	**258**	179	187	191	218	203	200	245	299	270	279	181	133	101	101	57	43	-

AM Peak 0715 - 0815 (962), AM PHF=0.91

MetroCount Traffic Executive
Event Counts

EventCount-1385 -- English (ENU)

Datasets:

Site:	**[9049.01] HWY-76 (OLD HWY-395-I-15) WESTBOUND**
Input A:	4 - West bound. - Added to totals. (1)
Input B:	0 - Unused or unknown. - Excluded from totals. (0)
Survey Duration:	21:30 Wednesday, June 03, 2009 => 12:34 Friday, June 05, 2009
File:	C:\Users\Gus\True Count\Projects\9049 GOLF GREEN\9049.01.W05Jun2009.EC0 (Base)
Identifier:	V280CRV3 MC56-L5 [MC55] (c)Microcom 19Oct04
Algorithm:	Event Count
Data type:	Axle sensors - Separate (Count)

Profile:

Filter time:	**0:00 Thursday, June 04, 2009 => 0:00 Friday, June 05, 2009**
Name:	TC Default Profile
Scheme:	Count events divided by two.
Units:	Non metric (ft, mi, ft/s, mph, lb, ton)
In profile:	Events = 14735 / 20093 (73.33%)

*** Thursday, June 04, 2009=14735, 15 minute drops**

0000	0100	0200	0300	0400	0500	0600	0700	0800	0900	1000	1100	1200	1300	1400	1500	1600	1700	1800	1900	2000	2100	2200	2300	
165	**122**	**117**	**143**	**277**	**756**	**1031**	**881**	**766**	**721**	**666**	**739**	**715**	**786**	**827**	**972**	**1098**	**1042**	**789**	**624**	**506**	**404**	**340**	**248**	
50	30	27	25	43	138	**254**	243	169	172	136	198	167	179	181	203	248	272	229	161	136	89	83	51	-
38	21	28	26	47	162	**263**	225	226	183	190	188	181	201	206	256	285	244	212	160	137	118	92	63	-
43	38	34	47	82	209	**253**	215	175	188	167	170	192	210	224	245	286	277	182	164	116	107	87	61	-
34	33	28	45	105	247	**261**	198	196	178	173	183	175	196	216	268	279	249	166	139	117	90	78	73	-

AM Peak 0600 - 0700 (1031), AM PHF=0.98

MetroCount Traffic Executive
Event Counts

EventCount-1012 -- English (ENU)

Datasets:

Site:	**[9023.01] PALA RD (BETWEEN I-15 RAMPS) EASTBOUND**
Input A:	2 - East bound. - Added to totals. (1)
Input B:	0 - Unused or unknown. - Excluded from totals. (0)
Survey Duration:	18:59 Monday, March 09, 2009 => 11:15 Wednesday, March 11, 2009
File:	C:\Users\Gus\True Count\Projects\9023 KOA PALA\9023.01.E11Mar2009.EC0 (Regular)
Identifier:	S1339PHE MC56-L5 [MC55] (c)Microcom 19Oct04
Algorithm:	Event Count
Data type:	Axle sensors - Separate (Count)

Profile:

Filter time:	**0:00 Tuesday, March 10, 2009 => 0:00 Wednesday, March 11, 2009**
Name:	TC Default Profile
Scheme:	Count events divided by two.
Units:	Non metric (ft, mi, ft/s, mph, lb, ton)
In profile:	Events = 11445 / 15567 (73.52%)

*** Tuesday, March 10, 2009=11445, 15 minute drops**

0000	0100	0200	0300	0400	0500	0600	0700	0800	0900	1000	1100	1200	1300	1400	1500	1600	1700	1800	1900	2000	2100	2200	2300	
83	**43**	**68**	**88**	**108**	**261**	**457**	**593**	**639**	**619**	**638**	**641**	**627**	**671**	**725**	**948**	**913**	**985**	**756**	**545**	**376**	**307**	**233**	**121**	
16	11	15	9	15	43	98	144	204	149	166	201	**171**	154	161	229	227	248	197	148	105	77	77	33	-
18	11	18	21	23	58	99	163	170	151	142	107	**170**	159	204	231	249	228	211	150	99	75	48	39	-
25	8	16	45	29	75	141	151	132	171	158	**174**	143	164	164	238	228	257	193	155	90	91	59	28	-
24	13	19	13	41	85	119	135	133	148	172	**159**	143	194	196	250	209	252	155	92	82	64	49	21	-

AM Peak 1130 - 1230 (674), AM PHF=0.97

MetroCount Traffic Executive
Event Counts

EventCount-1013 -- English (ENU)

Datasets:

Site:	**[9023.01] PALA RD (BETWEEN I-15 RAMPS) WESTBOUND**
Input A:	4 - West bound. - Added to totals. (1)
Input B:	0 - Unused or unknown. - Excluded from totals. (0)
Survey Duration:	18:58 Monday, March 09, 2009 => 11:16 Wednesday, March 11, 2009
File:	C:\Users\Gus\True Count\Projects\9023 KOA PALA\9023.01.w11Mar2009.EC0 (Base)
Identifier:	V289W1MS MC56-L5 [MC55] (c)Microcom 19Oct04
Algorithm:	Event Count
Data type:	Axle sensors - Separate (Count)

Profile:

Filter time:	**0:00 Tuesday, March 10, 2009 => 0:00 Wednesday, March 11, 2009**
Name:	TC Default Profile
Scheme:	Count events divided by two.
Units:	Non metric (ft, mi, ft/s, mph, lb, ton)
In profile:	Events = 7914 / 10736 (73.71%)

*** Tuesday, March 10, 2009=7914, 15 minute drops**

0000	0100	0200	0300	0400	0500	0600	0700	0800	0900	1000	1100	1200	1300	1400	1500	1600	1700	1800	1900	2000	2100	2200	2300	
92	**74**	**105**	**67**	**56**	**134**	**251**	**325**	**339**	**292**	**317**	**410**	**450**	**449**	**562**	**696**	**733**	**687**	**510**	**369**	**308**	**284**	**209**	**195**	
24	5	17	8	7	25	47	68	59	59	81	100	**102**	102	129	156	193	169	147	93	79	73	51	54	-
22	2	28	26	16	29	50	81	104	79	78	107	**110**	102	126	187	154	172	131	102	77	65	60	63	-
23	5	30	14	21	31	74	67	92	69	85	97	**129**	111	162	174	197	156	125	98	71	84	46	45	-
23	62	30	19	12	49	80	109	84	85	73	**106**	109	134	145	179	189	190	107	76	81	62	52	33	-

AM Peak 1145 - 1245 (447), AM PHF=0.87

MetroCount Traffic Executive
Event Counts

EventCount-52 -- English (ENU)

Datasets:

Site:	**[9095.A] PALA RD (RICE CANYON RD-COUSER CANYON RD) BOTH DIRECTIONS**
Input A:	6 - West/East. - Lane= 0, Added to totals. (/2.000)
Input B:	0 - Unused or unknown. - Lane= 0, Excluded from totals.
Survey Duration:	20:09 Wednesday, October 21, 2009 => 12:40 Friday, October 23, 2009
Zone:	
File:	9095.A23Oct2009.EC0 (Base)
Identifier:	V239JE7M MC56-L5 [MC55] (c)Microcom 19Oct04
Algorithm:	Event Count (v3.21 - 15275)
Data type:	Axle sensors - Separate (Count)

Profile:

Filter time:	**0:00 Thursday, October 22, 2009 => 0:00 Friday, October 23, 2009**
Name:	Default Profile
Scheme:	Count events divided by setup divisor
Units:	Non metric (ft, mi, ft/s, mph, lb, ton)
In profile:	Events = 11031 / 15454 (71.38%)

*** Thursday, October 22, 2009=11031, 15 minute drops**

0000	0100	0200	0300	0400	0500	0600	0700	0800	0900	1000	1100	1200	1300	1400	1500	1600	1700	1800	1900	2000	2100	2200	2300	
165	138	133	94	90	208	460	564	489	487	578	650	601	715	722	862	796	701	611	487	446	371	361	308	
48	38	32	27	27	21	79	137	123	119	139	**157**	153	182	175	195	192	173	146	166	111	91	95	83	-
50	39	32	21	22	55	104	124	116	144	144	**169**	157	188	180	215	172	188	153	122	124	95	88	72	-
39	28	33	27	21	59	184	167	127	123	149	**156**	132	180	202	259	200	195	158	100	108	92	91	82	-
28	33	36	19	21	73	94	137	123	102	148	**169**	159	166	165	194	233	146	155	99	104	94	88	71	-

AM Peak 1100 - 1200 (650), AM PHF=0.96

MetroCount Traffic Executive
Event Counts

EventCount-53 -- English (ENU)

Datasets:

Site:	**[9095.B] PALA RD (WEST OF TEMPALA RD) BOTH DIRECTIONS**
Input A:	6 - West/East. - Lane= 0, Added to totals. (/2.000)
Input B:	0 - Unused or unknown. - Lane= 0, Excluded from totals.
Survey Duration:	21:09 Wednesday, October 21, 2009 => 11:30 Friday, October 23, 2009
Zone:	
File:	9095.B23Oct2009.EC0 (Base)
Identifier:	W139N0DA MC56-L5 [MC55] (c)Microcom 19Oct04
Algorithm:	Event Count (v3.21 - 15275)
Data type:	Axle sensors - Separate (Count)

Profile:

Filter time:	**0:00 Thursday, October 22, 2009 => 0:00 Friday, October 23, 2009**
Name:	Default Profile
Scheme:	Count events divided by setup divisor
Units:	Non metric (ft, mi, ft/s, mph, lb, ton)
In profile:	Events = 10224 / 14429 (70.86%)

*** Thursday, October 22, 2009=10224, 15 minute drops**

0000	0100	0200	0300	0400	0500	0600	0700	0800	0900	1000	1100	1200	1300	1400	1500	1600	1700	1800	1900	2000	2100	2200	2300	
172	143	127	92	88	182	307	440	437	470	539	626	578	733	690	722	749	663	571	448	426	363	357	305	
52	47	23	28	27	23	56	93	109	121	113	137	**154**	198	162	169	194	158	130	131	98	87	90	89	-
45	28	32	24	27	36	76	108	120	128	132	**155**	154	172	176	172	161	184	133	119	123	94	85	64	-
42	33	35	20	18	62	88	143	101	111	151	**174**	123	203	174	211	211	175	142	97	114	89	93	92	-
33	35	37	20	17	62	88	96	108	111	144	**161**	148	161	178	171	184	147	167	102	92	94	90	60	-

AM Peak 1115 - 1215 (643), AM PHF=0.92

MetroCount Traffic Executive
Event Counts

EventCount-54 -- English (ENU)

Datasets:

Site:	**[9095.C] PALA RD (WEST OF LILAC RD) BOTH DIRECTIONS**
Input A:	6 - West/East. - Lane= 0, Added to totals. (/2.000)
Input B:	0 - Unused or unknown. - Lane= 0, Excluded from totals.
Survey Duration:	20:30 Wednesday, October 21, 2009 => 12:40 Friday, October 23, 2009
Zone:	
File:	9095.C23Oct2009.EC0 (Regular)
Identifier:	T5441WJP MC56-L5 [MC55] (c)Microcom 19Oct04
Algorithm:	Event Count (v3.21 - 15275)
Data type:	Axle sensors - Separate (Count)

Profile:

Filter time:	**0:00 Thursday, October 22, 2009 => 0:00 Friday, October 23, 2009**
Name:	Default Profile
Scheme:	Count events divided by setup divisor
Units:	Non metric (ft, mi, ft/s, mph, lb, ton)
In profile:	Events = 10329 / 14551 (70.98%)

*** Thursday, October 22, 2009=10329, 15 minute drops**

0000	0100	0200	0300	0400	0500	0600	0700	0800	0900	1000	1100	1200	1300	1400	1500	1600	1700	1800	1900	2000	2100	2200	2300	
175	**156**	**124**	**103**	**118**	**209**	**356**	**524**	**491**	**549**	**533**	**592**	**575**	**710**	**662**	**701**	**792**	**691**	**573**	**426**	**384**	**342**	**298**	**250**	
45	43	28	26	34	35	65	106	110	143	122	144	**135**	195	152	175	187	194	143	98	85	75	72	73	-
44	42	29	20	33	46	87	118	133	144	127	134	**158**	188	170	178	192	190	159	140	111	99	53	75	-
39	35	28	31	24	64	100	158	103	147	143	**171**	138	168	168	175	205	166	139	101	109	99	82	50	-
47	37	40	26	29	65	104	143	146	117	141	**144**	144	160	173	174	209	142	132	88	80	70	92	53	-

AM Peak 1130 - 1230 (607), AM PHF=0.89

MetroCount Traffic Executive
Vehicle Counts

340 -- English (ENU)

Datasets:

Site:	**[1096.02] HWY 76 (EAST PALA MISSION RD-LILAC RD) EASTBOUND**
Direction:	6 - West bound A>B, East bound B>A. **Lane:** 0
Survey Duration:	16:11 Wednesday, December 01, 2010 => 12:00 Friday, December 03, 2010
File:	1096.0203Dec2010.EC0 (Regular)
Data type:	Axle sensors - Paired (Class/Speed/Count)

Profile:

Filter time:	**0:00 Thursday, December 02, 2010 => 0:00 Friday, December 03, 2010**
Included classes:	1, 2, 3, 4, 5, 6, 7, 8, 9, 10, 11, 12, 13
Direction:	East (bound)
In profile:	Vehicles = 4317 / 14695 (29.38%)

*** Thursday, December 02, 2010 - Total=4317, 15 minute drops**

0000	0100	0200	0300	0400	0500	0600	0700	0800	0900	1000	1100	1200	1300	1400	1500	1600	1700	1800	1900	2000	2100	2200	2300	
66	**36**	**25**	**30**	**23**	**81**	**192**	**298**	**247**	**301**	**291**	**283**	**264**	**274**	**283**	**293**	**315**	**238**	**212**	**153**	**114**	**113**	**95**	**90**	
22	10	3	5	3	16	28	52	**65**	84	86	68	70	65	49	64	86	68	56	41	32	29	20	21	-
29	15	11	8	9	14	41	54	**60**	86	78	68	58	66	77	64	75	66	49	32	25	24	31	29	-
6	7	6	11	5	27	65	**92**	74	68	65	65	68	75	80	86	88	52	54	46	26	28	26	24	-
9	4	5	6	6	24	58	**100**	48	63	62	82	68	68	77	79	66	52	53	34	31	32	18	16	-

AM Peak 0730 - 0830 (317), AM PHF=0.79

MetroCount Traffic Executive
Vehicle Counts

341 -- English (ENU)

Datasets:

Site:	**[1096.02] HWY 76 (EAST PALA MISSION RD-LILAC RD) WESTBOUND**
Direction:	6 - West bound A>B, East bound B>A. **Lane:** 0
Survey Duration:	16:11 Wednesday, December 01, 2010 => 12:00 Friday, December 03, 2010
File:	1096.0203Dec2010.EC0 (Regular)
Data type:	Axle sensors - Paired (Class/Speed/Count)

Profile:

Filter time:	**0:00 Thursday, December 02, 2010 => 0:00 Friday, December 03, 2010**
Included classes:	1, 2, 3, 4, 5, 6, 7, 8, 9, 10, 11, 12, 13
Direction:	West (bound)
In profile:	Vehicles = 4504 / 14695 (30.65%)

*** Thursday, December 02, 2010 - Total=4504, 15 minute drops**

0000	0100	0200	0300	0400	0500	0600	0700	0800	0900	1000	1100	1200	1300	1400	1500	1600	1700	1800	1900	2000	2100	2200	2300	
139	**92**	**95**	**83**	**68**	**68**	**124**	**200**	**208**	**166**	**236**	**243**	**232**	**289**	**325**	**350**	**390**	**298**	**182**	**179**	**132**	**176**	**130**	**99**	
39	31	37	21	18	9	34	48	51	32	51	**67**	45	75	87	74	101	88	52	56	29	30	29	29	-
33	22	23	26	14	17	26	46	54	48	**63**	57	48	75	78	77	97	93	57	50	46	47	50	26	-
37	25	20	16	18	21	37	54	51	40	**56**	58	67	77	83	116	85	68	37	33	28	54	33	24	-
30	14	15	20	18	21	27	52	52	46	**66**	61	72	62	77	83	107	49	36	40	29	45	18	20	-

AM Peak 1015 - 1115 (252), AM PHF=0.94

MetroCount Traffic Executive
Event Counts

EventCount-885 -- English (ENU)

Datasets:

Site:	**[9002.02] PALA RD (MAGEE RD-ADAMS DR) EASTBOUND**
Input A:	2 - East bound. - Added to totals. (1)
Input B:	0 - Unused or unknown. - Excluded from totals. (0)
Survey Duration:	11:57 Tuesday, February 24, 2009 => 14:44 Friday, February 27, 2009
File:	C:\Users\Gus\True Count\Projects\9002 KOA SHADOW RUN\9002.02.E.EC0 (Regular)
Identifier:	T575QTP3 MC56-L5 [MC55] (c)Microcom 19Oct04
Algorithm:	Event Count
Data type:	Axle sensors - Separate (Count)

Profile:

Filter time:	**0:00 Wednesday, February 25, 2009 => 0:00 Thursday, February 26, 2009**
Name:	TC Default Profile
Scheme:	Count events divided by two.
Units:	Non metric (ft, mi, ft/s, mph, lb, ton)
In profile:	Events = 4844 / 17183 (28.19%)

*** Wednesday, February 25, 2009=4843, 15 minute drops**

0000	0100	0200	0300	0400	0500	0600	0700	0800	0900	1000	1100	1200	1300	1400	1500	1600	1700	1800	1900	2000	2100	2200	2300	
30	**34**	**14**	**29**	**23**	**92**	**160**	**276**	**289**	**259**	**256**	**281**	**278**	**309**	**312**	**291**	**291**	**277**	**252**	**234**	**296**	**213**	**241**	**106**	
8	11	2	10	7	12	17	46	**75**	62	61	69	62	68	83	64	84	75	64	66	79	33	101	29	-
6	10	3	3	5	24	34	53	**71**	55	78	76	90	78	61	90	67	77	62	38	90	75	69	25	-
10	7	6	10	3	28	42	**84**	76	69	53	71	73	85	88	75	80	69	71	60	70	50	28	34	-
6	6	3	6	8	28	67	**93**	67	73	64	65	53	78	80	62	60	56	55	70	57	55	43	18	-

AM Peak 0730 - 0830 (323), AM PHF=0.87

MetroCount Traffic Executive
Event Counts

EventCount-886 -- English (ENU)

Datasets:

Site:	**[9002.02] PALA RD (MAGEE RD-ADAMS DR) WESTBOUND**
Input A:	4 - West bound. - Added to totals. (1)
Input B:	0 - Unused or unknown. - Excluded from totals. (0)
Survey Duration:	11:55 Tuesday, February 24, 2009 => 14:43 Friday, February 27, 2009
File:	C:\Users\Gus\True Count\Projects\9002 KOA SHADOW RUN\9002.02.W.EC0 (Regular)
Identifier:	T5441WJP MC56-L5 [MC55] (c)Microcom 19Oct04
Algorithm:	Event Count
Data type:	Axle sensors - Separate (Count)

Profile:

Filter time:	**0:00 Wednesday, February 25, 2009 => 0:00 Thursday, February 26, 2009**
Name:	TC Default Profile
Scheme:	Count events divided by two.
Units:	Non metric (ft, mi, ft/s, mph, lb, ton)
In profile:	Events = 4612 / 13405 (34.41%)

*** Wednesday, February 25, 2009=4611, 15 minute drops**

0000	0100	0200	0300	0400	0500	0600	0700	0800	0900	1000	1100	1200	1300	1400	1500	1600	1700	1800	1900	2000	2100	2200	2300	
124	**102**	**77**	**60**	**52**	**91**	**123**	**181**	**186**	**146**	**186**	**201**	**239**	**276**	**274**	**342**	**372**	**439**	**270**	**190**	**161**	**175**	**185**	**159**	
26	22	21	16	14	19	20	38	44	26	51	56	**54**	65	61	81	93	94	82	52	29	43	36	47	-
37	29	23	16	10	17	37	37	42	41	42	49	**48**	67	58	75	89	114	71	53	39	52	42	34	-
31	29	16	17	10	28	36	54	59	36	36	40	**74**	65	84	92	82	89	70	44	45	48	62	40	-
30	22	17	11	18	27	30	52	41	43	57	**56**	63	79	71	94	108	142	47	41	48	32	45	38	-

AM Peak 1145 - 1245 (232), AM PHF=0.78

MetroCount Traffic Executive
Event Counts

EventCount-887 -- English (ENU)

Datasets:

Site:	**[9002.03] PALA RD (PAUMA RESERVATION RD-COLE GRADE RD) EASTBOUND**
Input A:	2 - East bound. - Added to totals. (1)
Input B:	0 - Unused or unknown. - Excluded from totals. (0)
Survey Duration:	12:30 Tuesday, February 24, 2009 => 14:42 Friday, February 27, 2009
File:	C:\Users\Gus\True Count\Projects\9002 KOA SHADOW RUN\9002.03.E.EC0 (Regular)
Identifier:	S014F2C9 MC56-L5 [MC55] (c)Microcom 19Oct04
Algorithm:	Event Count
Data type:	Axle sensors - Separate (Count)

Profile:

Filter time:	**0:00 Wednesday, February 25, 2009 => 0:00 Thursday, February 26, 2009**
Name:	TC Default Profile
Scheme:	Count events divided by two.
Units:	Non metric (ft, mi, ft/s, mph, lb, ton)
In profile:	Events = 4297 / 12376 (34.72%)

*** Wednesday, February 25, 2009=4296, 15 minute drops**

0000	0100	0200	0300	0400	0500	0600	0700	0800	0900	1000	1100	1200	1300	1400	1500	1600	1700	1800	1900	2000	2100	2200	2300	
56	**40**	**15**	**25**	**31**	**100**	**174**	**257**	**280**	**257**	**235**	**254**	**254**	**283**	**265**	**302**	**313**	**261**	**209**	**176**	**172**	**126**	**160**	**51**	
18	12	3	5	12	10	22	45	**86**	66	63	66	55	56	72	74	88	63	60	41	44	24	32	16	-
12	12	2	9	4	26	35	54	**62**	57	70	66	56	63	51	77	81	68	57	45	46	42	79	7	-
17	10	5	3	7	30	40	**66**	64	60	53	52	79	96	72	83	75	59	56	53	47	23	21	18	-
9	6	5	8	8	34	77	**92**	68	74	49	70	64	68	70	68	69	71	36	37	35	37	28	10	-

AM Peak 0730 - 0830 (306), AM PHF=0.83

MetroCount Traffic Executive
Event Counts

EventCount-888 -- English (ENU)

Datasets:

Site:	**[9002.03] PALA RD (PAUMA RESERVATION RD-COLE GRADE RD) WESTBOUND**
Input A:	4 - West bound. - Added to totals. (1)
Input B:	0 - Unused or unknown. - Excluded from totals. (0)
Survey Duration:	12:29 Tuesday, February 24, 2009 => 14:41 Friday, February 27, 2009
File:	C:\Users\Gus\True Count\Projects\9002 KOA SHADOW RUN\9002.03.W.EC0 (Regular)
Identifier:	S1079HQH MC56-L5 [MC55] (c)Microcom 19Oct04
Algorithm:	Event Count
Data type:	Axle sensors - Separate (Count)

Profile:

Filter time:	**0:00 Wednesday, February 25, 2009 => 0:00 Thursday, February 26, 2009**
Name:	TC Default Profile
Scheme:	Count events divided by two.
Units:	Non metric (ft, mi, ft/s, mph, lb, ton)
In profile:	Events = 4793 / 13930 (34.41%)

*** Wednesday, February 25, 2009=4792, 15 minute drops**

0000	0100	0200	0300	0400	0500	0600	0700	0800	0900	1000	1100	1200	1300	1400	1500	1600	1700	1800	1900	2000	2100	2200	2300	
66	**63**	**46**	**37**	**44**	**72**	**141**	**217**	**194**	**179**	**208**	**261**	**313**	**301**	**307**	**386**	**468**	**477**	**269**	**185**	**150**	**128**	**146**	**134**	
9	15	13	11	13	12	24	41	53	33	49	71	**60**	67	71	75	87	100	73	47	36	42	26	35	-
22	16	13	8	9	17	34	44	45	45	52	52	**83**	87	61	97	100	122	70	58	37	31	35	29	-
22	15	13	9	7	20	47	63	57	48	55	68	**69**	85	100	120	137	133	72	41	36	32	54	30	-
13	17	7	9	15	23	36	69	39	53	52	**70**	101	62	75	94	144	122	54	39	41	23	31	40	-

AM Peak 1145 - 1245 (282), AM PHF=0.85

MetroCount Traffic Executive
Event Counts

EventCount-56 -- English (ENU)

Datasets:

Site:	**[9095.E] PALA MISSION RD (WEST OF PALA TEMECULA RD) BOTH DIRECTIONS**
Input A:	6 - West/East. - Lane= 0, Added to totals. (/2.000)
Input B:	0 - Unused or unknown. - Lane= 0, Excluded from totals.
Survey Duration:	21:06 Wednesday, October 21, 2009 => 11:12 Friday, October 23, 2009
Zone:	
File:	9095.E23Oct2009.EC0 (Base)
Identifier:	W558TFAZ MC56-L5 [MC55] (c)Microcom 19Oct04
Algorithm:	Event Count (v3.21 - 15275)
Data type:	Axle sensors - Separate (Count)

Profile:

Filter time:	**0:00 Thursday, October 22, 2009 => 0:00 Friday, October 23, 2009**
Name:	Default Profile
Scheme:	Count events divided by setup divisor
Units:	Non metric (ft, mi, ft/s, mph, lb, ton)
In profile:	Events = 4711 / 6664 (70.69%)

*** Thursday, October 22, 2009=4711, 15 minute drops**

0000	0100	0200	0300	0400	0500	0600	0700	0800	0900	1000	1100	1200	1300	1400	1500	1600	1700	1800	1900	2000	2100	2200	2300	
90	50	85	51	41	72	149	246	213	228	229	246	229	292	312	368	364	347	280	193	179	140	156	156	
19	12	16	18	9	13	26	46	60	47	55	**64**	62	76	73	95	79	96	57	58	49	42	44	42	-
23	12	14	9	8	16	31	58	53	62	53	**56**	47	65	66	67	89	88	69	37	41	28	41	32	-
22	11	31	11	10	20	45	86	45	58	52	**81**	72	64	99	112	117	89	88	52	39	37	42	59	-
27	15	25	13	14	23	48	57	56	62	**70**	45	48	88	75	95	79	74	67	47	50	34	29	24	-

AM Peak 1045 - 1145 (270), AM PHF=0.83

MetroCount Traffic Executive
Event Counts

EventCount-77 -- English (ENU)

Datasets:

Site:	**[9095.F] PALA TAMECULA RD (NORTH OF PALA MISSION RD) BOTH DIRECTIONS**
Input A:	7 - North/South. - Lane= 0, Added to totals. (/2.000)
Input B:	0 - Unused or unknown. - Lane= 0, Excluded from totals.
Survey Duration:	18:54 Monday, October 26, 2009 => 11:02 Wednesday, October 28, 2009
Zone:	
File:	9095.F-228Oct2009.EC0 (Base)
Identifier:	V231TDVM MC56-L5 [MC55] (c)Microcom 19Oct04
Algorithm:	Event Count (v3.21 - 15275)
Data type:	Axle sensors - Separate (Count)

Profile:

Filter time:	**0:00 Tuesday, October 27, 2009 => 0:00 Wednesday, October 28, 2009**
Name:	Default Profile
Scheme:	Count events divided by setup divisor
Units:	Non metric (ft, mi, ft/s, mph, lb, ton)
In profile:	Events = 8318 / 11989 (69.38%)

*** Tuesday, October 27, 2009=8318, 15 minute drops**

0000	0100	0200	0300	0400	0500	0600	0700	0800	0900	1000	1100	1200	1300	1400	1500	1600	1700	1800	1900	2000	2100	2200	2300	
152	**122**	**149**	**109**	**88**	**154**	**317**	**458**	**436**	**446**	**397**	**404**	**469**	**461**	**518**	**647**	**641**	**585**	**456**	**330**	**284**	**266**	**217**	**219**	
30	33	27	30	22	27	52	77	**121**	118	82	94	111	88	119	155	147	160	105	91	83	61	53	58	-
40	28	38	30	26	28	75	105	**128**	98	114	105	118	114	119	157	160	157	133	78	80	68	39	70	-
48	29	50	23	20	51	94	**137**	113	129	111	100	133	138	140	186	195	141	116	77	57	53	62	56	-
35	32	34	26	20	50	96	**139**	75	102	91	106	108	121	140	150	140	127	103	84	65	85	64	35	-

AM Peak 0730 - 0830 (524), AM PHF=0.94

True Count

3401 First Ave #123
San Diego, CA 92103

File Name : 9049.07.E VISTA WAY.SR 76
Site Code : 00000000
Start Date : 6/2/2009
Page No : 1

Groups Printed- Vehicles

	OLD RIVER RD Southbound				SR 76 Westbound				E VISTA WAY Northbound				SR 76 Eastbound				
Start Time	Left	Thru	Right	Peds	Left	Thru	Right	Peds	Left	Thru	Right	Peds	Left	Thru	Right	Peds	Int. Total
07:00	3	36	69	0	52	208	2	0	84	3	68	0	7	118	79	1	730
07:15	3	49	42	0	84	201	3	0	74	7	89	0	10	143	53	0	758
07:30	0	47	43	1	72	220	2	1	66	9	71	0	13	141	59	0	745
07:45	1	30	61	0	96	212	3	0	60	7	65	0	6	141	101	0	783
Total	7	162	215	1	304	841	10	1	284	26	293	0	36	543	292	1	3016
08:00	1	39	38	0	88	206	0	0	51	4	68	0	5	109	46	0	655
08:15	0	19	26	2	83	227	2	0	42	3	61	0	3	141	35	2	646
08:30	1	11	18	0	55	210	1	0	39	8	41	0	9	118	38	1	550
08:45	0	12	20	0	74	195	0	1	50	5	70	0	8	113	34	0	582
Total	2	81	102	2	300	838	3	1	182	20	240	0	25	481	153	3	2433
*** BREAK ***																	
16:00	0	14	10	0	112	189	8	0	76	16	91	1	12	204	92	9	834
16:15	3	20	16	0	142	174	7	0	46	14	100	0	22	272	48	0	864
16:30	1	13	21	0	128	210	3	0	50	28	129	0	28	263	42	0	916
16:45	0	10	15	0	112	154	2	0	59	17	105	1	29	237	42	0	783
Total	4	57	62	0	494	727	20	0	231	75	425	2	91	976	224	9	3397
17:00	2	15	11	0	98	166	1	1	46	24	114	0	24	243	51	0	796
17:15	0	20	12	0	83	185	5	0	62	29	117	0	18	257	53	0	841
17:30	0	15	18	1	111	170	1	0	42	30	101	0	29	237	56	1	812
17:45	1	19	10	0	83	139	3	0	42	27	96	0	20	240	39	0	719
Total	3	69	51	1	375	660	10	1	192	110	428	0	91	977	199	1	3168
Grand Total	16	369	430	4	1473	3066	43	3	889	231	1386	2	243	2977	868	14	12014
Apprch %	2	45.1	52.5	0.5	32.1	66.9	0.9	0.1	35.4	9.2	55.3	0.1	5.9	72.6	21.2	0.3	
Total %	0.1	3.1	3.6	0	12.3	25.5	0.4	0	7.4	1.9	11.5	0	2	24.8	7.2	0.1	

True Count

3401 First Ave #123
San Diego, CA 92103

File Name : 9049.07.E VISTA WAY.SR 76
Site Code : 00000000
Start Date : 6/2/2009
Page No : 2

	OLD RIVER RD Southbound					SR 76 Westbound					E VISTA WAY Northbound					SR 76 Eastbound					
Start Time	Left	Thru	Right	Peds	App. Total	Left	Thru	Right	Peds	App. Total	Left	Thru	Right	Peds	App. Total	Left	Thru	Right	Peds	App. Total	Int. Total
Peak Hour Analysis From 07:00 to 11:45 - Peak 1 of 1																					
Peak Hour for Entire Intersection Begins at 07:00																					
07:00	**3**	36	**69**	0	**108**	52	208	2	0	262	**84**	3	68	0	155	7	118	79	**1**	205	730
07:15	3	**49**	42	0	94	84	201	**3**	0	288	74	7	**89**	0	**170**	10	**143**	53	0	206	758
07:30	0	47	43	**1**	91	72	**220**	2	**1**	295	66	**9**	71	0	146	**13**	141	59	0	213	745
07:45	1	30	61	0	92	**96**	212	3	0	**311**	60	7	65	0	132	6	141	**101**	0	**248**	**783**
Total Volume	7	162	215	1	385	304	841	10	1	1156	284	26	293	0	603	36	543	292	1	872	3016
% App. Total	1.8	42.1	55.8	0.3		26.3	72.8	0.9	0.1		47.1	4.3	48.6	0		4.1	62.3	33.5	0.1		
PHF	.583	.827	.779	.250	.891	.792	.956	.833	.250	.929	.845	.722	.823	.000	.887	.692	.949	.723	.250	.879	.963

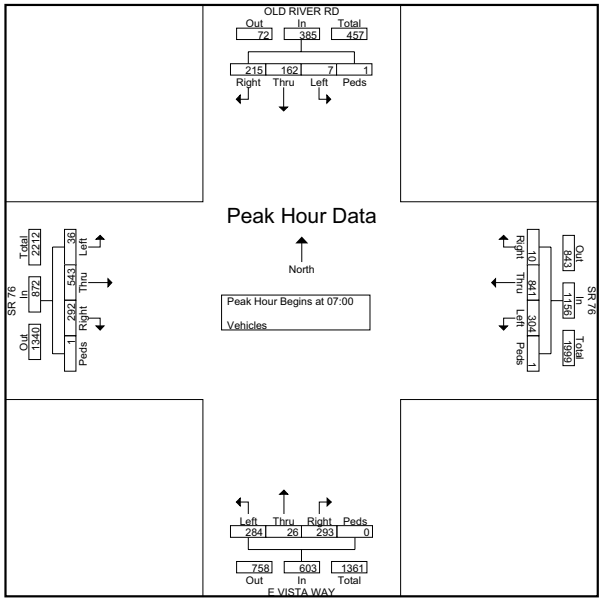

True Count

3401 First Ave #123
San Diego, CA 92103

File Name : 9049.07.E VISTA WAY.SR 76
Site Code : 00000000
Start Date : 6/2/2009
Page No : 3

	OLD RIVER RD Southbound					SR 76 Westbound					E VISTA WAY Northbound					SR 76 Eastbound					
Start Time	Left	Thru	Right	Peds	App. Total	Left	Thru	Right	Peds	App. Total	Left	Thru	Right	Peds	App. Total	Left	Thru	Right	Peds	App. Total	Int. Total
Peak Hour Analysis From 12:00 to 17:45 - Peak 1 of 1																					
Peak Hour for Entire Intersection Begins at 16:00																					
16:00	0	14	10	0	24	112	189	**8**	0	309	**76**	16	91	**1**	184	12	204	**92**	**9**	317	834
16:15	**3**	**20**	16	0	**39**	**142**	174	7	0	323	46	14	100	0	160	22	**272**	48	0	**342**	864
16:30	1	13	**21**	0	35	128	**210**	3	0	**341**	50	**28**	**129**	0	**207**	28	263	42	0	333	**916**
16:45	0	10	15	0	25	112	154	2	0	268	59	17	105	1	182	**29**	237	42	0	308	783
Total Volume	4	57	62	0	123	494	727	20	0	1241	231	75	425	2	733	91	976	224	9	1300	3397
% App. Total	3.3	46.3	50.4	0		39.8	58.6	1.6	0		31.5	10.2	58	0.3		7	75.1	17.2	0.7		
PHF	.333	.713	.738	.000	.788	.870	.865	.625	.000	.910	.760	.670	.824	.500	.885	.784	.897	.609	.250	.950	.927

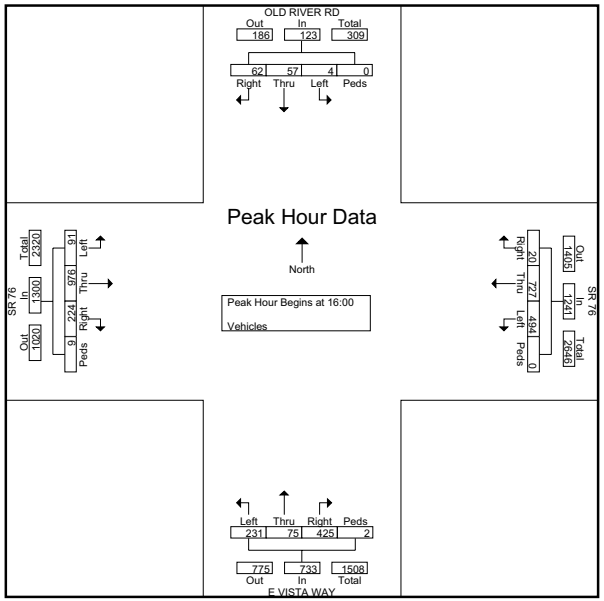

True Count

4401 Twain Ave, Suite 27
San Diego, CA 92120

File Name : 1096.01.MISSION RD SR-76.NORTH RIVER RD
Site Code : 00000000
Start Date : 12/2/2010
Page No : 1

Groups Printed- Unshifted

	MISSION RD SR-76 Southbound				NORTH RIVER RD Westbound				MISSION RD SR-76 Northbound				NORTH RIVER RD Eastbound				
Start Time	Left	Thru	Right	Peds	Left	Thru	Right	Peds	Left	Thru	Right	Peds	Left	Thru	Right	Peds	Int. Total
07:00	0	196	67	0	0	0	0	0	32	132	0	0	27	0	21	0	475
07:15	0	229	52	0	0	0	0	0	21	190	0	0	20	0	12	0	524
07:30	0	218	35	0	0	0	0	0	16	177	0	0	30	0	16	0	492
07:45	0	251	29	0	0	0	0	0	23	193	0	0	26	0	16	0	538
Total	0	894	183	0	0	0	0	0	92	692	0	0	103	0	65	0	2029
08:00	0	255	23	0	0	0	0	0	18	161	0	0	15	0	13	0	485
08:15	0	252	34	0	0	0	0	0	12	157	0	0	25	0	12	0	492
08:30	0	277	21	0	0	0	0	0	13	154	0	0	22	0	3	0	490
08:45	0	265	26	0	0	0	0	0	14	134	0	0	16	0	18	1	474
Total	0	1049	104	0	0	0	0	0	57	606	0	0	78	0	46	1	1941
*** BREAK ***																	
16:00	0	214	23	0	0	0	0	0	15	252	0	0	49	0	38	0	591
16:15	0	189	32	0	0	0	0	0	11	295	0	0	50	0	34	0	611
16:30	0	241	26	0	0	0	0	0	16	274	0	0	56	0	32	0	645
16:45	0	188	21	0	0	0	0	0	11	261	0	0	70	0	36	0	587
Total	0	832	102	0	0	0	0	0	53	1082	0	0	225	0	140	0	2434
17:00	0	227	25	0	0	0	0	0	9	273	0	0	70	0	37	0	641
17:15	0	227	34	0	0	0	0	0	13	274	0	0	63	0	23	0	634
17:30	0	216	22	0	0	0	0	0	9	274	0	0	82	0	29	6	638
17:45	0	215	21	0	0	0	0	0	9	258	0	0	41	0	15	10	569
Total	0	885	102	0	0	0	0	0	40	1079	0	0	256	0	104	16	2482
Grand Total	0	3660	491	0	0	0	0	0	242	3459	0	0	662	0	355	17	8886
Apprch %	0	88.2	11.8	0	0	0	0	0	6.5	93.5	0	0	64	0	34.3	1.6	
Total %	0	41.2	5.5	0	0	0	0	0	2.7	38.9	0	0	7.4	0	4	0.2	

True Count

4401 Twain Ave, Suite 27
San Diego, CA 92120

File Name : 1096.01.MISSION RD SR-76.NORTH RIVER RD
Site Code : 00000000
Start Date : 12/2/2010
Page No : 2

	MISSION RD SR-76 Southbound					NORTH RIVER RD Westbound					MISSION RD SR-76 Northbound					NORTH RIVER RD Eastbound					
Start Time	Left	Thru	Right	Peds	App. Total	Left	Thru	Right	Peds	App. Total	Left	Thru	Right	Peds	App. Total	Left	Thru	Right	Peds	App. Total	Int. Total
Peak Hour Analysis From 07:00 to 11:45 - Peak 1 of 1																					
Peak Hour for Entire Intersection Begins at 07:15																					
07:15	0	229	**52**	0	**281**	0	0	0	0	0	21	190	0	0	211	20	0	12	0	32	524
07:30	0	218	35	0	253	0	0	0	0	0	16	177	0	0	193	**30**	0	**16**	0	**46**	492
07:45	0	251	29	0	280	0	0	0	0	0	**23**	**193**	0	0	**216**	26	0	16	0	42	**538**
08:00	0	**255**	23	0	278	0	0	0	0	0	18	161	0	0	179	15	0	13	0	28	485
Total Volume	0	953	139	0	1092	0	0	0	0	0	78	721	0	0	799	91	0	57	0	148	2039
% App. Total	0	87.3	12.7	0		0	0	0	0		9.8	90.2	0	0		61.5	0	38.5	0		
PHF	.000	.934	.668	.000	.972	.000	.000	.000	.000	.000	.848	.934	.000	.000	.925	.758	.000	.891	.000	.804	.947

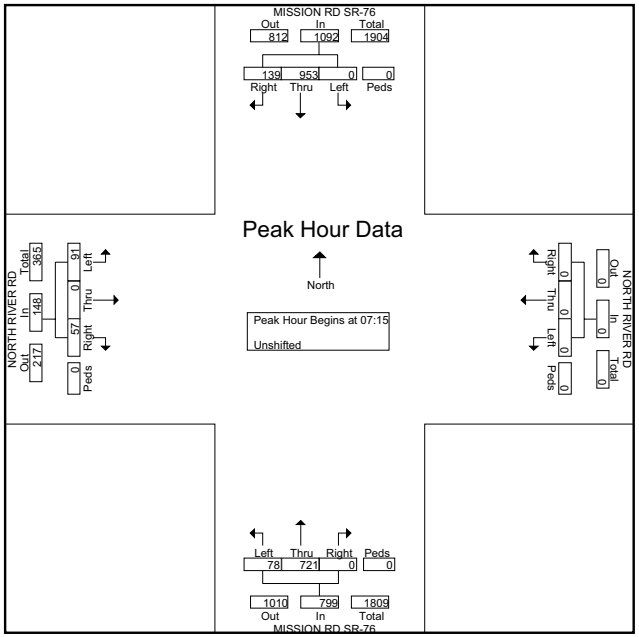

True Count

4401 Twain Ave, Suite 27
San Diego, CA 92120

File Name : 1096.01.MISSION RD SR-76.NORTH RIVER RD
Site Code : 00000000
Start Date : 12/2/2010
Page No : 3

	MISSION RD SR-76 Southbound					NORTH RIVER RD Westbound					MISSION RD SR-76 Northbound					NORTH RIVER RD Eastbound					
Start Time	Left	Thru	Right	Peds	App. Total	Left	Thru	Right	Peds	App. Total	Left	Thru	Right	Peds	App. Total	Left	Thru	Right	Peds	App. Total	Int. Total
Peak Hour Analysis From 07:00 to 17:45 - Peak 1 of 1																					
Peak Hour for Entire Intersection Begins at 16:30																					
16:30	0	**241**	26	0	**267**	0	0	0	0	0	**16**	**274**	0	0	**290**	56	0	32	0	88	**645**
16:45	0	188	21	0	209	0	0	0	0	0	11	261	0	0	272	**70**	0	36	0	106	587
17:00	0	227	25	0	252	0	0	0	0	0	9	273	0	0	282	70	0	**37**	0	**107**	641
17:15	0	227	**34**	0	261	0	0	0	0	0	13	274	0	0	287	63	0	23	0	86	634
Total Volume	0	883	106	0	989	0	0	0	0	0	49	1082	0	0	1131	259	0	128	0	387	2507
% App. Total	0	89.3	10.7	0		0	0	0	0		4.3	95.7	0	0		66.9	0	33.1	0		
PHF	.000	.916	.779	.000	.926	.000	.000	.000	.000	.000	.766	.987	.000	.000	.975	.925	.000	.865	.000	.904	.972

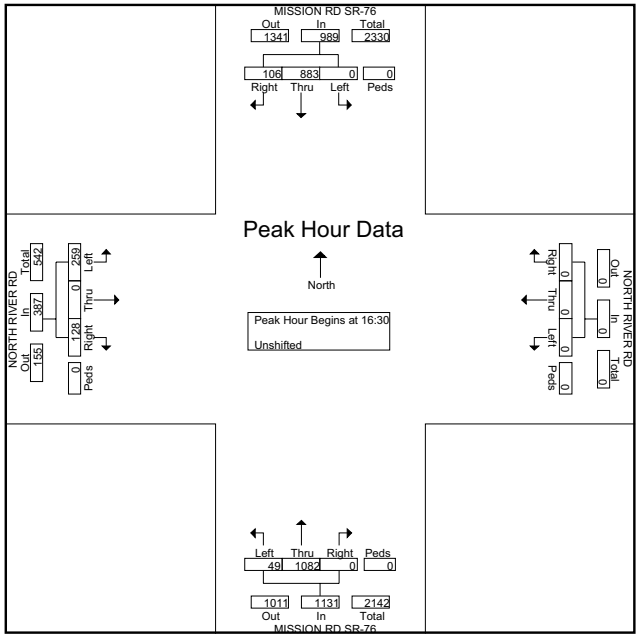

True Count

3401 First Ave #123
San Diego, CA 92103

File Name : 9049.01.SR 76.OLIVE HILL RD
Site Code : 00000000
Start Date : 6/4/2009
Page No : 1

Groups Printed- Vehicles

	SR 76 Southbound				OLIVE HILL RD Westbound				SR 76 Northbound				OLIVE HILL RD Eastbound				
Start Time	Left	Thru	Right	Peds	Left	Thru	Right	Peds	Left	Thru	Right	Peds	Left	Thru	Right	Peds	Int. Total
07:00	88	253	12	1	12	7	42	2	18	160	8	0	28	30	16	0	677
07:15	104	271	11	0	4	13	54	0	15	169	12	1	22	36	19	0	731
07:30	135	265	13	0	12	11	44	0	20	197	21	0	15	36	12	0	781
07:45	130	218	17	2	9	24	77	0	9	184	33	0	24	61	22	0	810
Total	457	1007	53	3	37	55	217	2	62	710	74	1	89	163	69	0	2999
08:00	88	250	6	0	22	33	77	0	18	137	18	1	26	41	22	1	740
08:15	47	247	7	1	20	20	42	0	12	193	6	0	20	23	19	0	657
08:30	38	224	4	2	13	9	37	0	9	154	13	0	21	19	25	1	569
08:45	33	206	11	0	8	12	32	0	15	164	13	0	19	21	16	0	550
Total	206	927	28	3	63	74	188	0	54	648	50	1	86	104	82	2	2516
*** BREAK ***																	
16:00	61	200	15	1	12	18	58	1	21	307	18	0	21	22	25	0	780
16:15	70	219	14	0	15	14	56	0	31	308	16	0	24	18	20	0	805
16:30	54	207	11	0	7	25	73	0	18	285	14	0	31	14	10	0	749
16:45	68	223	17	1	13	20	74	0	18	343	12	0	26	24	16	0	855
Total	253	849	57	2	47	77	261	1	88	1243	60	0	102	78	71	0	3189
17:00	56	220	16	0	13	21	37	0	20	323	11	0	36	9	8	1	771
17:15	55	224	8	2	13	16	60	3	22	348	8	0	28	15	16	0	818
17:30	56	222	11	0	8	16	62	0	23	333	19	0	35	8	11	0	804
17:45	39	216	18	0	7	24	62	0	26	325	15	0	25	10	13	1	781
Total	206	882	53	2	41	77	221	3	91	1329	53	0	124	42	48	2	3174
Grand Total	1122	3665	191	10	188	283	887	6	295	3930	237	2	401	387	270	4	11878
Apprch %	22.5	73.5	3.8	0.2	13.8	20.7	65	0.4	6.6	88	5.3	0	37.8	36.4	25.4	0.4	
Total %	9.4	30.9	1.6	0.1	1.6	2.4	7.5	0.1	2.5	33.1	2	0	3.4	3.3	2.3	0	

True Count

3401 First Ave #123
San Diego, CA 92103

File Name : 9049.01.SR 76.OLIVE HILL RD
Site Code : 00000000
Start Date : 6/4/2009
Page No : 2

	SR 76 Southbound					OLIVE HILL RD Westbound					SR 76 Northbound					OLIVE HILL RD Eastbound					
Start Time	Left	Thru	Right	Peds	App. Total	Left	Thru	Right	Peds	App. Total	Left	Thru	Right	Peds	App. Total	Left	Thru	Right	Peds	App. Total	Int. Total
Peak Hour Analysis From 07:00 to 11:45 - Peak 1 of 1																					
Peak Hour for Entire Intersection Begins at 07:15																					
07:15	104	**271**	11	0	386	4	13	54	0	71	15	169	12	**1**	197	22	36	19	0	77	731
07:30	**135**	265	13	0	**413**	12	11	44	0	67	**20**	**197**	21	0	**238**	15	36	12	0	63	781
07:45	130	218	**17**	**2**	367	9	24	**77**	0	110	9	184	**33**	0	226	24	**61**	**22**	0	**107**	**810**
08:00	88	250	6	0	344	**22**	**33**	77	0	**132**	18	137	18	1	174	**26**	41	22	**1**	90	740
Total Volume	457	1004	47	2	1510	47	81	252	0	380	62	687	84	2	835	87	174	75	1	337	3062
% App. Total	30.3	66.5				12.4	21.3	66.3				82.3	10.1			25.8	51.6	22.3			
PHF	.846	.926	.691	.250	.914	.534	.614	.818	.000	.720	.775	.872	.636	.500	.877	.837	.713	.852	.250	.787	.945

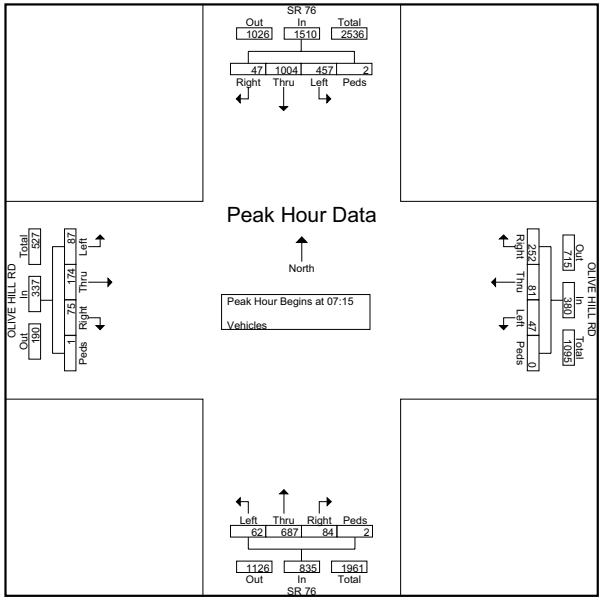

True Count

3401 First Ave #123
San Diego, CA 92103

File Name : 9049.01.SR 76.OLIVE HILL RD
Site Code : 00000000
Start Date : 6/4/2009
Page No : 3

	SR 76 Southbound					OLIVE HILL RD Westbound					SR 76 Northbound					OLIVE HILL RD Eastbound					
Start Time	Left	Thru	Right	Peds	App. Total	Left	Thru	Right	Peds	App. Total	Left	Thru	Right	Peds	App. Total	Left	Thru	Right	Peds	App. Total	Int. Total
Peak Hour Analysis From 12:00 to 17:45 - Peak 1 of 1																					
Peak Hour for Entire Intersection Begins at 16:45																					
16:45	**68**	223	**17**	1	**309**	**13**	20	**74**	0	**107**	18	343	12	0	373	26	**24**	**16**	0	**66**	**855**
17:00	56	220	16	0	292	13	**21**	37	0	71	20	323	11	0	354	**36**	9	8	**1**	54	771
17:15	55	**224**	8	**2**	289	13	16	60	**3**	92	22	**348**	8	0	**378**	28	15	16	0	59	818
17:30	56	222	11	0	289	8	16	62	0	86	**23**	333	**19**	0	375	35	8	11	0	54	804
Total Volume	235	889	52	3	1179	47	73	233	3	356	83	1347	50	0	1480	125	56	51	1	233	3248
% App. Total	19.9	75.4				13.2	20.5	65.4								53.6		21.9			
PHF	.864	.992	.765	.375	.954	.904	.869	.787	.250	.832	.902	.968	.658	.000	.979	.868	.583	.797	.250	.883	.950

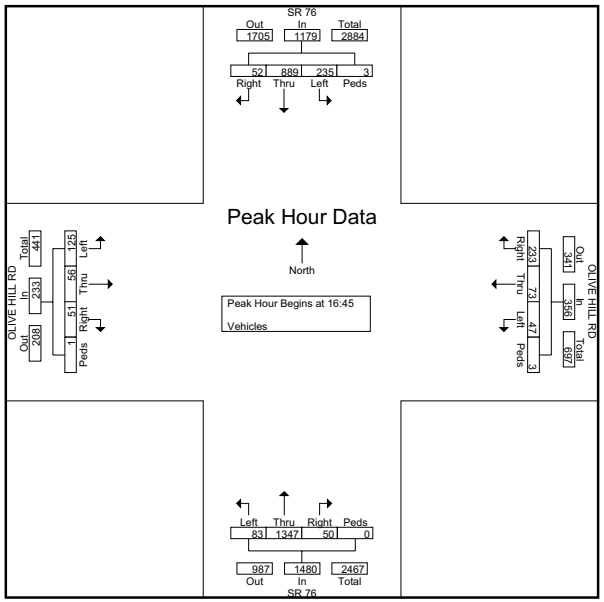

True Count

3401 First Ave #123
San Diego, CA 92103

File Name : 9049.02.SR 76.S MISSION RD
Site Code : 00000000
Start Date : 6/4/2009
Page No : 1

Groups Printed- Vehicles

	SR 76 Southbound				S MISSION RD Westbound				SR 76 Northbound				S MISSION RD Eastbound				
Start Time	Left	Thru	Right	Peds	Left	Thru	Right	Peds	Left	Thru	Right	Peds	Left	Thru	Right	Peds	Int. Total
07:00	0	177	14	0	0	0	0	0	67	76	0	0	11	0	98	0	443
07:15	0	199	35	0	0	0	0	0	165	135	0	0	28	0	223	0	785
07:30	0	229	31	1	0	0	0	0	132	131	0	0	23	0	196	0	743
07:45	0	208	6	0	0	0	0	0	94	124	0	0	24	0	118	0	574
Total	0	813	86	1	0	0	0	0	458	466	0	0	86	0	635	0	2545
08:00	0	112	11	0	0	0	0	0	98	121	0	0	29	0	141	0	512
08:15	0	160	20	2	0	0	0	0	114	102	0	0	11	0	144	0	553
08:30	0	128	20	0	0	0	0	0	111	87	0	0	17	0	125	0	488
08:45	0	127	29	0	0	0	0	0	115	109	0	0	16	0	134	0	530
Total	0	527	80	2	0	0	0	0	438	419	0	0	73	0	544	0	2083
*** BREAK ***																	
16:00	0	161	29	0	0	0	0	0	145	183	0	0	30	0	128	0	676
16:15	0	155	18	0	0	0	0	0	170	202	0	0	24	0	115	0	684
16:30	0	149	21	0	0	0	0	0	173	209	0	0	27	0	122	0	701
16:45	0	167	38	0	0	0	0	0	201	226	0	0	29	0	133	0	794
Total	0	632	106	0	0	0	0	0	689	820	0	0	110	0	498	0	2855
17:00	0	152	28	0	0	0	0	0	163	231	0	0	39	0	119	0	732
17:15	0	157	36	0	0	0	0	0	174	239	0	0	41	0	151	0	798
17:30	0	162	15	0	0	0	0	0	194	248	0	0	23	0	145	0	787
17:45	0	158	36	0	0	0	0	0	190	202	0	0	35	0	107	0	728
Total	0	629	115	0	0	0	0	0	721	920	0	0	138	0	522	0	3045
Grand Total	0	2601	387	3	0	0	0	0	2306	2625	0	0	407	0	2199	0	10528
Apprch %	0	87	12.9	0.1	0	0	0	0	46.8	53.2	0	0	15.6	0	84.4	0	
Total %	0	24.7	3.7	0	0	0	0	0	21.9	24.9	0	0	3.9	0	20.9	0	

True Count

3401 First Ave #123
San Diego, CA 92103

File Name : 9049.02.SR 76.S MISSION RD
Site Code : 00000000
Start Date : 6/4/2009
Page No : 3

	SR 76 Southbound					S MISSION RD Westbound					SR 76 Northbound					S MISSION RD Eastbound					
Start Time	Left	Thru	Right	Peds	App. Total	Left	Thru	Right	Peds	App. Total	Left	Thru	Right	Peds	App. Total	Left	Thru	Right	Peds	App. Total	Int. Total
Peak Hour Analysis From 12:00 to 17:45 - Peak 1 of 1																					
Peak Hour for Entire Intersection Begins at 16:45																					
16:45	0	**167**	**38**	0	**205**	0	0	0	0	0	**201**	226	0	0	427	29	0	133	0	162	794
17:00	0	152	28	0	180	0	0	0	0	0	163	231	0	0	394	39	0	119	0	158	732
17:15	0	157	36	0	193	0	0	0	0	0	174	239	0	0	413	**41**	0	**151**	0	**192**	**798**
17:30	0	162	15	0	177	0	0	0	0	0	194	**248**	0	0	**442**	23	0	145	0	168	787
Total Volume	0	638	117	0	755	0	0	0	0	0	732	944	0	0	1676	132	0	548	0	680	3111
% App. Total	0	84.5	15.5	0		0	0	0	0		43.7	56.3	0	0		19.4	0	80.6	0		
PHF	.000	.955	.770	.000	.921	.000	.000	.000	.000	.000	.910	.952	.000	.000	.948	.805	.000	.907	.000	.885	.975

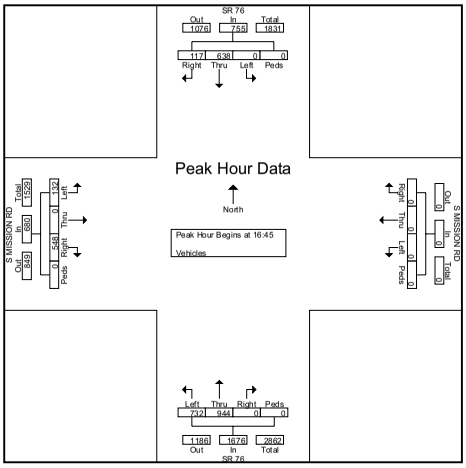

True Count

3401 First Ave #123
San Diego, CA 92103

File Name : 9049.02.SR 76.S MISSION RD
Site Code : 00000000
Start Date : 6/4/2009
Page No : 2

	SR 76 Southbound					S MISSION RD Westbound					SR 76 Northbound					S MISSION RD Eastbound					
Start Time	Left	Thru	Right	Peds	App. Total	Left	Thru	Right	Peds	App. Total	Left	Thru	Right	Peds	App. Total	Left	Thru	Right	Peds	App. Total	Int. Total
Peak Hour Analysis From 07:00 to 11:45 - Peak 1 of 1																					
Peak Hour for Entire Intersection Begins at 07:15																					
07:15	0	199	**35**	0	234	0	0	0	0	0	**165**	**135**	0	0	**300**	28	0	**223**	0	**251**	**785**
07:30	0	**229**	31	**1**	**261**	0	0	0	0	0	132	131	0	0	263	23	0	196	0	219	743
07:45	0	208	6	0	214	0	0	0	0	0	94	124	0	0	218	24	0	118	0	142	574
08:00	0	112	11	0	123	0	0	0	0	0	98	121	0	0	219	**29**	0	141	0	170	512
Total Volume	0	748	83	1	832	0	0	0	0	0	489	511	0	0	1000	104	0	678	0	782	2614
% App. Total	0	89.9	10	0.1		0	0	0	0		48.9	51.1	0	0		13.3	0	86.7	0		
PHF	.000	.817	.593	.250	.797	.000	.000	.000	.000	.000	.741	.946	.000	.000	.833	.897	.000	.760	.000	.779	.832

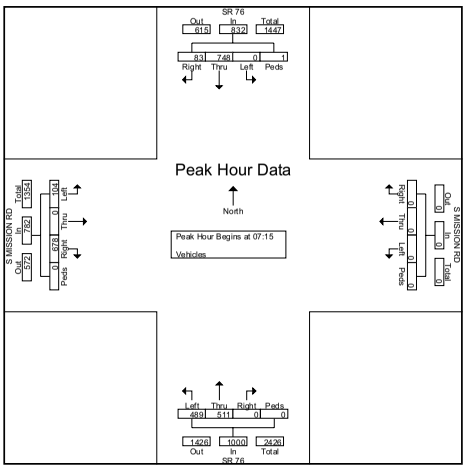

True Count

3401 First Ave #123
San Diego, CA 92103

File Name : 9049.03.GIRD RD.SR 76
Site Code : 00000000
Start Date : 6/4/2009
Page No : 1

Groups Printed- Vehicles

	GIRD RD Southbound				SR 76 Westbound				GIRD RD Northbound				SR 76 Eastbound				
Start Time	Left	Thru	Right	Peds	Left	Thru	Right	Peds	Left	Thru	Right	Peds	Left	Thru	Right	Peds	Int. Total
07:00	12	0	22	0	0	176	7	0	0	0	0	0	9	137	0	0	363
07:15	13	0	29	0	0	189	14	0	0	0	0	1	18	141	0	0	405
07:30	21	0	37	0	0	209	11	0	0	0	0	0	9	166	0	0	453
07:45	11	0	23	0	0	194	8	0	0	0	0	0	17	155	0	0	408
Total	57	0	111	0	0	768	40	0	0	0	0	1	53	599	0	0	1629
08:00	16	0	22	0	0	123	12	0	0	0	0	0	18	132	0	0	323
08:15	15	0	21	0	0	181	9	0	0	0	0	0	16	137	0	0	379
08:30	10	0	24	0	0	147	6	0	0	0	0	0	15	122	0	0	324
08:45	11	0	19	0	0	155	8	0	0	0	0	0	20	130	0	0	343
Total	52	0	86	0	0	606	35	0	0	0	0	0	69	521	0	0	1369
*** BREAK ***																	
16:00	7	0	11	0	0	173	18	0	0	0	0	0	16	216	0	0	441
16:15	6	0	20	0	0	164	17	0	0	0	0	1	27	221	0	0	456
16:30	8	0	16	0	0	201	18	0	0	0	0	0	16	215	0	0	474
16:45	11	0	20	0	0	161	17	0	0	0	0	0	25	224	0	0	458
Total	32	0	67	0	0	699	70	0	0	0	0	1	84	876	0	0	1829
17:00	7	0	11	0	0	186	10	0	0	0	0	0	32	238	0	0	484
17:15	5	0	13	0	0	141	14	0	0	0	0	0	22	254	0	0	449
17:30	14	0	15	0	0	186	18	0	0	0	0	0	24	240	0	0	497
17:45	8	0	19	0	0	172	14	0	0	0	0	0	23	216	0	0	452
Total	34	0	58	0	0	685	56	0	0	0	0	0	101	948	0	0	1882
Grand Total	175	0	322	0	0	2758	201	0	0	0	0	2	307	2944	0	0	6709
Apprch %	35.2	0	64.8	0	0	93.2	6.8	0	0	0	0	100	9.4	90.6	0	0	
Total %	2.6	0	4.8	0	0	41.1	3	0	0	0	0	0	4.6	43.9	0	0	

True Count

3401 First Ave #123
San Diego, CA 92103

File Name : 9049.03.GIRD RD.SR 76
Site Code : 00000000
Start Date : 6/4/2009
Page No : 2

	GIRD RD Southbound					SR 76 Westbound					GIRD RD Northbound					SR 76 Eastbound					
Start Time	Left	Thru	Right	Peds	App. Total	Left	Thru	Right	Peds	App. Total	Left	Thru	Right	Peds	App. Total	Left	Thru	Right	Peds	App. Total	Int. Total
Peak Hour Analysis From 07:00 to 11:45 - Peak 1 of 1																					
Peak Hour for Entire Intersection Begins at 07:00																					
07:00	12	0	22	0	34	0	176	7	0	183	0	0	0	0	0	9	137	0	0	146	363
07:15	13	0	29	0	42	0	189	**14**	0	203	0	0	0	**1**	**1**	**18**	141	0	0	159	405
07:30	**21**	0	**37**	0	**58**	0	**209**	11	0	**220**	0	0	0	0	0	9	**166**	0	0	**175**	**453**
07:45	11	0	23	0	34	0	194	8	0	202	0	0	0	0	0	17	155	0	0	172	408
Total Volume	57	0	111	0	168	0	768	40	0	808	0	0	0	1	1	53	599	0	0	652	1629
% App. Total	33.9	0	66.1	0		0	95	5	0		0	0	0	100		8.1	91.9	0	0		
PHF	.679	.000	.750	.000	.724	.000	.919	.714	.000	.918	.000	.000	.000	.250	.250	.736	.902	.000	.000	.931	.899

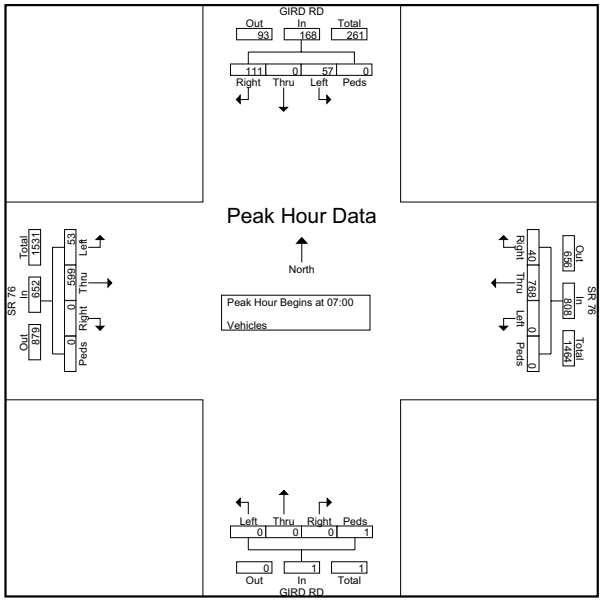

True Count

3401 First Ave #123
San Diego, CA 92103

File Name : 9049.03.GIRD RD.SR 76
Site Code : 00000000
Start Date : 6/4/2009
Page No : 3

	GIRD RD Southbound					SR 76 Westbound					GIRD RD Northbound					SR 76 Eastbound					
Start Time	Left	Thru	Right	Peds	App. Total	Left	Thru	Right	Peds	App. Total	Left	Thru	Right	Peds	App. Total	Left	Thru	Right	Peds	App. Total	Int. Total
Peak Hour Analysis From 12:00 to 17:45 - Peak 1 of 1																					
Peak Hour for Entire Intersection Begins at 16:45																					
16:45	11	0	**20**	0	**31**	0	161	17	0	178	0	0	0	0	0	25	224	0	0	249	458
17:00	7	0	11	0	18	0	**186**	10	0	196	0	0	0	0	0	**32**	238	0	0	270	484
17:15	5	0	13	0	18	0	141	14	0	155	0	0	0	0	0	22	**254**	0	0	**276**	449
17:30	**14**	0	15	0	29	0	186	**18**	0	**204**	0	0	0	0	0	24	240	0	0	264	**497**
Total Volume	37	0	59	0	96	0	674	59	0	733	0	0	0	0	0	103	956	0	0	1059	1888
% App. Total	38.5	0	61.5	0		0	92	8	0		0	0	0	0		9.7	90.3	0	0		
PHF	.661	.000	.738	.000	.774	.000	.906	.819	.000	.898	.000	.000	.000	.000	.000	.805	.941	.000	.000	.959	.950

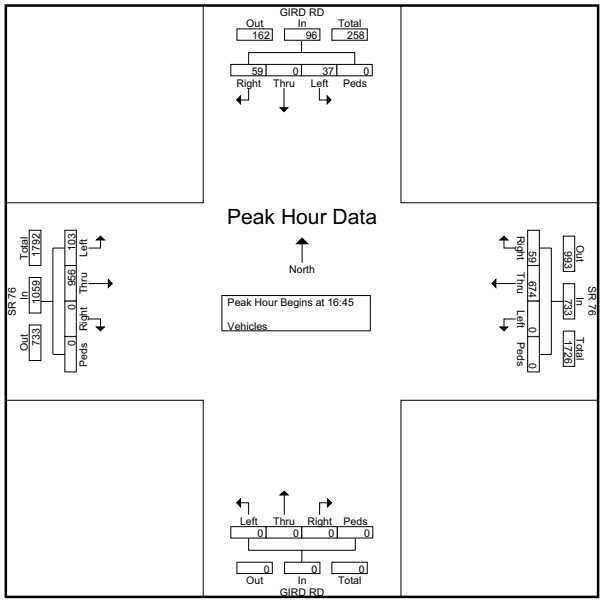

True Count

3401 First Ave #123
San Diego, CA 92103

File Name : 9049.04.S OLD HIGHWAY 395.SR 76
Site Code : 00000000
Start Date : 6/3/2009
Page No : 1

Groups Printed- Vehicles

	S OLD HIGHWAY 395 Southbound				SR 76 Westbound				S OLD HIGHWAY 395 Northbound				SR 76 Eastbound				
Start Time	Left	Thru	Right	Peds	Left	Thru	Right	Peds	Left	Thru	Right	Peds	Left	Thru	Right	Peds	Int. Total
07:00	64	25	13	0	19	168	18	0	36	10	7	0	8	111	5	0	484
07:15	56	16	11	0	5	152	41	0	25	22	15	0	7	148	8	0	506
07:30	61	16	11	0	15	136	16	0	30	14	21	0	18	131	10	0	479
07:45	48	19	14	0	14	145	20	0	32	15	13	0	15	96	18	0	449
Total	229	76	49	0	53	601	95	0	123	61	56	0	48	486	41	0	1918
08:00	54	21	6	0	10	78	15	0	30	13	10	0	6	98	8	0	349
08:15	58	15	16	0	13	142	29	0	16	28	18	0	11	110	4	1	461
08:30	54	4	12	0	8	121	16	0	13	14	4	0	7	102	11	0	366
08:45	49	14	8	0	8	101	13	0	11	6	8	0	4	78	10	0	310
Total	215	54	42	0	39	442	73	0	70	61	40	0	28	388	33	1	1486
*** BREAK ***																	
16:00	49	19	14	2	9	124	60	2	18	25	15	1	14	191	20	0	563
16:15	58	20	19	0	15	140	56	3	22	20	5	0	19	189	23	0	589
16:30	48	14	14	2	8	160	54	3	18	26	12	2	21	201	20	0	603
16:45	54	18	12	0	15	108	43	1	14	24	13	1	16	140	19	0	478
Total	209	71	59	4	47	532	213	9	72	95	45	4	70	721	82	0	2233
17:00	57	18	16	0	19	158	63	0	16	24	7	0	26	193	15	0	612
17:15	52	21	15	0	15	160	65	1	22	20	11	0	7	207	20	0	616
17:30	51	13	14	0	16	155	48	0	14	31	8	0	22	225	22	0	619
17:45	67	21	11	0	22	122	57	0	12	23	12	0	11	219	16	0	593
Total	227	73	56	0	72	595	233	1	64	98	38	0	66	844	73	0	2440
Grand Total	880	274	206	4	211	2170	614	10	329	315	179	4	212	2439	229	1	8077
Apprch %	64.5	20.1	15.1	0.3	7	72.2	20.4	0.3	39.8	38.1	21.6	0.5	7.4	84.7	7.9	0	
Total %	10.9	3.4	2.6	0	2.6	26.9	7.6	0.1	4.1	3.9	2.2	0	2.6	30.2	2.8	0	

True Count

3401 First Ave #123
San Diego, CA 92103

File Name : 9049.04.S OLD HIGHWAY 395.SR 76
Site Code : 00000000
Start Date : 6/3/2009
Page No : 2

	S OLD HIGHWAY 395 Southbound					SR 76 Westbound					S OLD HIGHWAY 395 Northbound					SR 76 Eastbound					
Start Time	Left	Thru	Right	Peds	App. Total	Left	Thru	Right	Peds	App. Total	Left	Thru	Right	Peds	App. Total	Left	Thru	Right	Peds	App. Total	Int. Total
Peak Hour Analysis From 07:00 to 11:45 - Peak 1 of 1																					
Peak Hour for Entire Intersection Begins at 07:00																					
07:00	**64**	**25**	13	0	**102**	**19**	**168**	18	0	**205**	**36**	10	7	0	53	8	111	5	0	124	484
07:15	56	16	11	0	83	5	152	**41**	0	198	25	**22**	15	0	62	7	**148**	8	0	**163**	**506**
07:30	61	16	11	0	88	15	136	16	0	167	30	14	**21**	0	**65**	**18**	131	10	0	159	479
07:45	48	19	**14**	0	81	14	145	20	0	179	32	15	13	0	60	15	96	**18**	0	129	449
Total Volume	229	76	49	0	354	53	601	95	0	749	123	61	56	0	240	48	486	41	0	575	1918
% App. Total	64.7	21.5	13.8	0		7.1	80.2	12.7	0		51.2	25.4	23.3	0		8.3	84.5	7.1	0		
PHF	.895	.760	.875	.000	.868	.697	.894	.579	.000	.913	.854	.693	.667	.000	.923	.667	.821	.569	.000	.882	.948

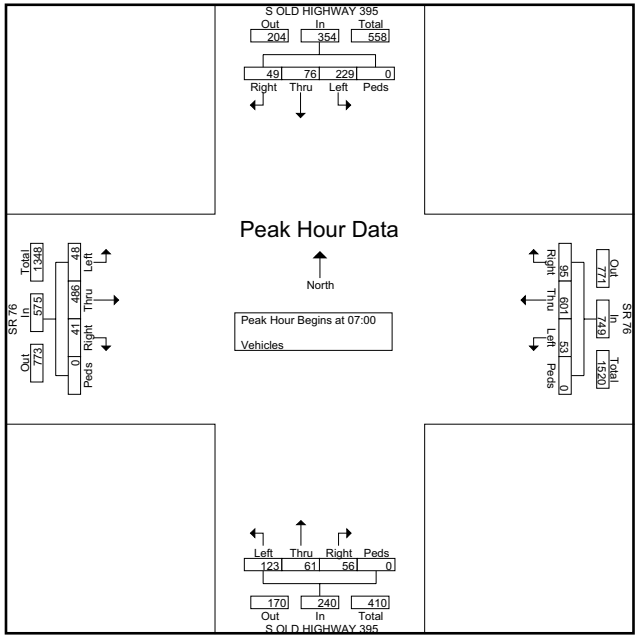

True Count

3401 First Ave #123
San Diego, CA 92103

File Name : 9049.04.S OLD HIGHWAY 395.SR 76
Site Code : 00000000
Start Date : 6/3/2009
Page No : 3

	S OLD HIGHWAY 395 Southbound					SR 76 Westbound					S OLD HIGHWAY 395 Northbound					SR 76 Eastbound					
Start Time	Left	Thru	Right	Peds	App. Total	Left	Thru	Right	Peds	App. Total	Left	Thru	Right	Peds	App. Total	Left	Thru	Right	Peds	App. Total	Int. Total
Peak Hour Analysis From 12:00 to 17:45 - Peak 1 of 1																					
Peak Hour for Entire Intersection Begins at 17:00																					
17:00	57	18	**16**	0	91	19	158	63	0	240	16	24	7	0	47	**26**	193	15	0	234	612
17:15	52	**21**	15	0	88	15	**160**	**65**	**1**	**241**	**22**	20	11	0	**53**	7	207	20	0	234	616
17:30	51	13	14	0	78	16	155	48	0	219	14	**31**	8	0	53	22	**225**	**22**	0	**269**	**619**
17:45	**67**	21	11	0	**99**	**22**	122	57	0	201	12	23	**12**	0	47	11	219	16	0	246	593
Total Volume	227	73	56	0	356	72	595	233	1	901	64	98	38	0	200	66	844	73	0	983	2440
% App. Total	63.8	20.5	15.7	0		8	66	25.9	0.1		32	49	19	0		6.7	85.9	7.4	0		
PHF	.847	.869	.875	.000	.899	.818	.930	.896	.250	.935	.727	.790	.792	.000	.943	.635	.938	.830	.000	.914	.985

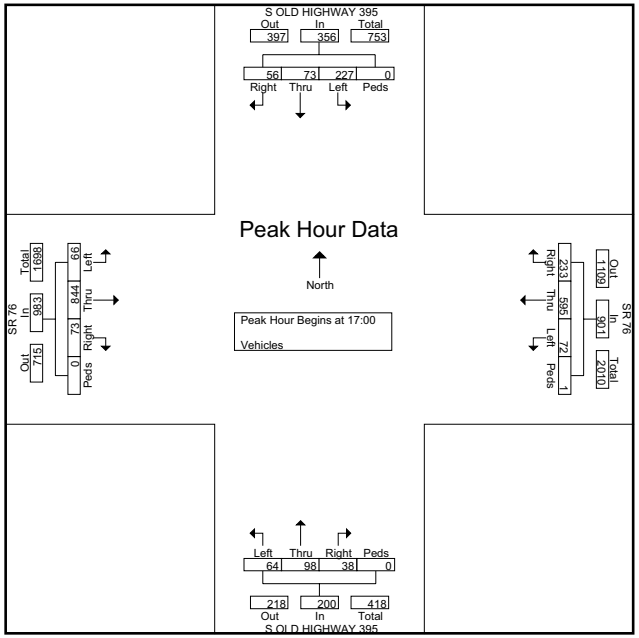

True Count

3401 First Ave #123
San Diego, CA 92103

File Name : 9049.05.I 15 SB OFF-RAMP.SR 76
Site Code : 00000000
Start Date : 6/3/2009
Page No : 1

Groups Printed- Vehicles

	I 15 SB OFF-RAMP Southbound				SR 76 Westbound				I 15 SB ON-RAMP Northbound				SR 76 Eastbound				
Start Time	Left	Thru	Right	Peds	Left	Thru	Right	Peds	Left	Thru	Right	Peds	Left	Thru	Right	Peds	Int. Total
07:00	14	1	141	3	22	66	0	0	0	0	0	1	0	110	96	0	454
07:15	17	1	156	0	26	63	0	0	0	0	0	0	0	145	74	0	482
07:30	27	1	127	0	17	52	0	0	0	0	0	0	0	138	87	0	449
07:45	21	1	134	0	13	62	0	0	0	0	0	0	0	125	72	0	428
Total	79	4	558	3	78	243	0	0	0	0	0	1	0	518	329	0	1813
08:00	22	1	107	0	15	70	0	0	0	0	0	0	0	110	74	0	399
08:15	25	0	118	0	13	75	0	0	0	0	0	0	0	127	66	0	424
08:30	15	0	128	0	12	53	0	0	0	0	0	0	0	105	71	0	384
08:45	21	1	108	0	16	70	0	0	0	0	0	0	0	100	81	0	397
Total	83	2	461	0	56	268	0	0	0	0	0	0	0	442	292	0	1604
*** BREAK ***																	
16:00	27	0	100	1	43	122	0	0	0	0	1	0	0	177	53	0	524
16:15	19	2	108	0	30	129	0	0	0	0	0	0	0	212	67	0	567
16:30	22	0	116	0	41	130	0	0	0	0	0	0	0	191	53	0	553
16:45	17	2	121	0	46	164	0	0	0	0	0	0	0	236	67	0	653
Total	85	4	445	1	160	545	0	0	0	0	1	0	0	816	240	0	2297
17:00	26	2	121	1	38	134	0	0	0	0	0	0	0	209	79	0	610
17:15	32	3	151	0	30	109	0	0	0	0	0	0	0	227	68	0	620
17:30	18	1	107	0	35	117	0	0	0	0	0	0	0	220	76	0	574
17:45	10	0	97	0	38	130	0	0	0	0	0	0	0	239	56	0	570
Total	86	6	476	1	141	490	0	0	0	0	0	0	0	895	279	0	2374
Grand Total	333	16	1940	5	435	1546	0	0	0	0	1	1	0	2671	1140	0	8088
Apprch %	14.5	0.7	84.6	0.2	22	78	0	0	0	0	50	50	0	70.1	29.9	0	
Total %	4.1	0.2	24	0.1	5.4	19.1	0	0	0	0	0	0	0	33	14.1	0	

True Count

3401 First Ave #123
San Diego, CA 92103

File Name : 9049.05.I 15 SB OFF-RAMP.SR 76
Site Code : 00000000
Start Date : 6/3/2009
Page No : 2

	I 15 SB OFF-RAMP Southbound					SR 76 Westbound					I 15 SB ON-RAMP Northbound					SR 76 Eastbound					
Start Time	Left	Thru	Right	Peds	App. Total	Left	Thru	Right	Peds	App. Total	Left	Thru	Right	Peds	App. Total	Left	Thru	Right	Peds	App. Total	Int. Total
Peak Hour Analysis From 07:00 to 11:45 - Peak 1 of 1																					
Peak Hour for Entire Intersection Begins at 07:00																					
07:00	14	**1**	141	**3**	159	22	**66**	0	0	88	0	0	0	**1**	**1**	0	110	**96**	0	206	454
07:15	17	1	**156**	0	**174**	**26**	63	0	0	**89**	0	0	0	0	0	0	**145**	74	0	219	**482**
07:30	**27**	1	127	0	155	17	52	0	0	69	0	0	0	0	0	0	138	87	0	**225**	449
07:45	21	1	134	0	156	13	62	0	0	75	0	0	0	0	0	0	125	72	0	197	428
Total Volume	79	4	558	3	644	78	243	0	0	321	0	0	0	1	1	0	518	329	0	847	1813
% App. Total	12.3	0.6	86.6	0.5		24.3	75.7	0	0		0	0	0	100		0	61.2	38.8	0		
PHF	.731	1.000	.894	.250	.925	.750	.920	.000	.000	.902	.000	.000	.000	.250	.250	.000	.893	.857	.000	.941	.940

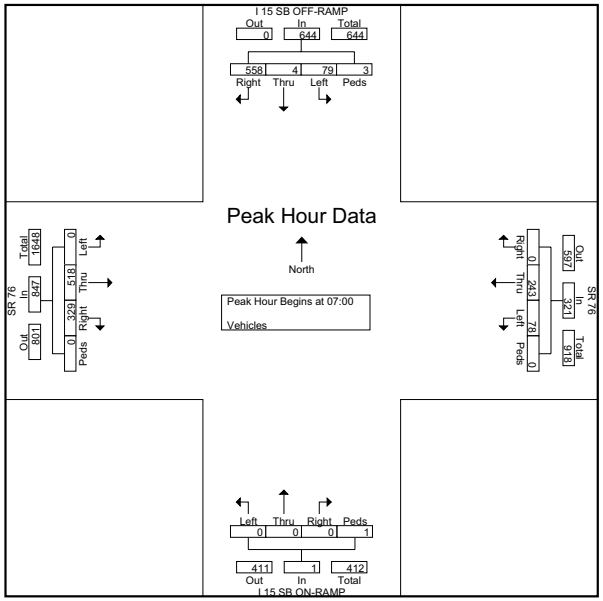

True Count

3401 First Ave #123
San Diego, CA 92103

File Name : 9049.05.I 15 SB OFF-RAMP.SR 76
Site Code : 00000000
Start Date : 6/3/2009
Page No : 3

	I 15 SB OFF-RAMP Southbound					SR 76 Westbound					I 15 SB ON-RAMP Northbound					SR 76 Eastbound					
Start Time	Left	Thru	Right	Peds	App. Total	Left	Thru	Right	Peds	App. Total	Left	Thru	Right	Peds	App. Total	Left	Thru	Right	Peds	App. Total	Int. Total
Peak Hour Analysis From 12:00 to 17:45 - Peak 1 of 1																					
Peak Hour for Entire Intersection Begins at 16:45																					
16:45	17	2	121	0	140	**46**	**164**	0	0	**210**	0	0	0	0	0	0	**236**	67	0	**303**	**653**
17:00	26	2	121	**1**	150	38	134	0	0	172	0	0	0	0	0	0	209	**79**	0	288	610
17:15	**32**	**3**	**151**	0	**186**	30	109	0	0	139	0	0	0	0	0	0	227	68	0	295	620
17:30	18	1	107	0	126	35	117	0	0	152	0	0	0	0	0	0	220	76	0	296	574
Total Volume	93	8	500	1	602	149	524	0	0	673	0	0	0	0	0	0	892	290	0	1182	2457
% App. Total	15.4	1.3	83.1	0.2		22.1	77.9	0	0		0	0	0	0		0	75.5	24.5	0		
PHF	.727	.667	.828	.250	.809	.810	.799	.000	.000	.801	.000	.000	.000	.000	.000	.000	.945	.918	.000	.975	.941

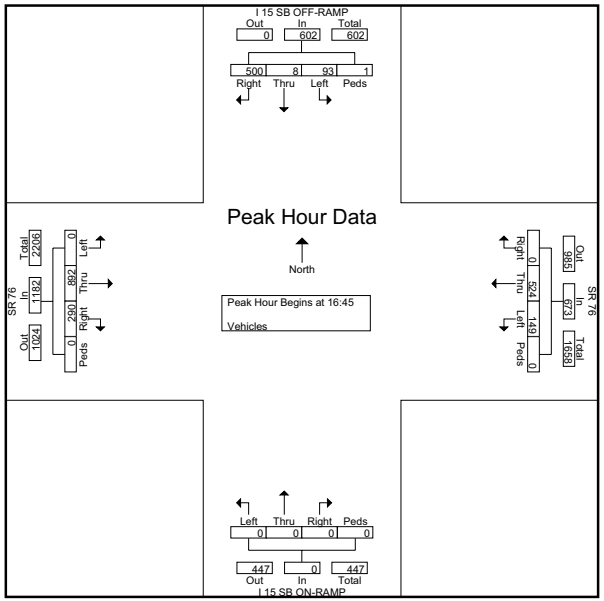

True Count

3401 First Ave #123
San Diego, CA 92103

File Name : 9049.06.I 15 NB OFF-RAMP.SR 76
Site Code : 00000000
Start Date : 6/3/2009
Page No : 1

Groups Printed- Vehicles

	I 15 NB ON-RAMP Southbound				SR 76 Westbound				I 15 NB OFF-RAMP Northbound				SR 76 Eastbound				
Start Time	Left	Thru	Right	Peds	Left	Thru	Right	Peds	Left	Thru	Right	Peds	Left	Thru	Right	Peds	Int. Total
07:00	0	0	0	0	0	48	15	0	35	0	20	1	91	37	0	0	247
07:15	0	0	0	0	0	51	19	0	42	1	34	0	112	47	0	0	306
07:30	0	0	0	0	0	40	9	0	24	0	42	0	105	64	0	0	284
07:45	0	0	0	0	0	37	16	0	36	0	28	0	93	53	0	0	263
Total	0	0	0	0	0	176	59	0	137	1	124	1	401	201	0	0	1100
08:00	0	0	0	0	0	33	13	0	47	1	14	0	70	49	0	0	227
08:15	0	0	0	0	0	37	11	0	48	1	32	0	96	57	0	0	282
08:30	0	0	0	0	0	30	12	0	31	1	40	0	74	47	0	0	235
08:45	0	0	0	0	0	42	16	0	48	2	34	0	70	47	0	0	259
Total	0	0	0	0	0	142	52	0	174	5	120	0	310	200	0	0	1003
*** BREAK ***																	
16:00	0	0	0	0	0	85	30	0	75	2	58	0	133	67	0	0	450
16:15	0	0	0	0	0	70	19	0	92	0	34	0	170	58	0	0	443
16:30	0	0	0	0	0	90	12	0	84	0	41	0	169	43	0	0	439
16:45	0	0	0	0	0	95	25	0	91	2	38	1	198	49	0	0	499
Total	0	0	0	0	0	340	86	0	342	4	171	1	670	217	0	0	1831
17:00	0	0	0	0	0	80	23	0	80	2	38	0	174	50	0	0	447
17:15	0	0	0	0	0	59	32	0	97	2	45	0	178	68	0	0	481
17:30	0	0	0	0	0	68	25	0	67	1	36	1	179	51	0	0	428
17:45	0	0	0	0	0	79	28	0	86	1	40	0	182	56	0	0	472
Total	0	0	0	0	0	286	108	0	330	6	159	1	713	225	0	0	1828
Grand Total	0	0	0	0	0	944	305	0	983	16	574	3	2094	843	0	0	5762
Apprch %	0	0	0	0	0	75.6	24.4	0	62.4	1	36.4	0.2	71.3	28.7	0	0	
Total %	0	0	0	0	0	16.4	5.3	0	17.1	0.3	10	0.1	36.3	14.6	0	0	

True Count

3401 First Ave #123
San Diego, CA 92103

File Name : 9049.06.I 15 NB OFF-RAMP.SR 76
Site Code : 00000000
Start Date : 6/3/2009
Page No : 2

	I 15 NB ON-RAMP Southbound					SR 76 Westbound					I 15 NB OFF-RAMP Northbound					SR 76 Eastbound					
Start Time	Left	Thru	Right	Peds	App. Total	Left	Thru	Right	Peds	App. Total	Left	Thru	Right	Peds	App. Total	Left	Thru	Right	Peds	App. Total	Int. Total
Peak Hour Analysis From 07:00 to 11:45 - Peak 1 of 1																					
Peak Hour for Entire Intersection Begins at 07:00																					
07:00	0	0	0	0	0	0	48	15	0	63	35	0	20	**1**	56	91	37	0	0	128	247
07:15	0	0	0	0	0	0	**51**	**19**	0	**70**	**42**	**1**	34	0	**77**	**112**	47	0	0	159	**306**
07:30	0	0	0	0	0	0	40	9	0	49	24	0	**42**	0	66	105	**64**	0	0	**169**	284
07:45	0	0	0	0	0	0	37	16	0	53	36	0	28	0	64	93	53	0	0	146	263
Total Volume	0	0	0	0	0	0	176	59	0	235	137	1	124	1	263	401	201	0	0	602	1100
% App. Total	0	0	0	0		0	74.9	25.1	0		52.1	0.4	47.1	0.4		66.6	33.4	0	0		
PHF	.000	.000	.000	.000	.000	.000	.863	.776	.000	.839	.815	.250	.738	.250	.854	.895	.785	.000	.000	.891	.899

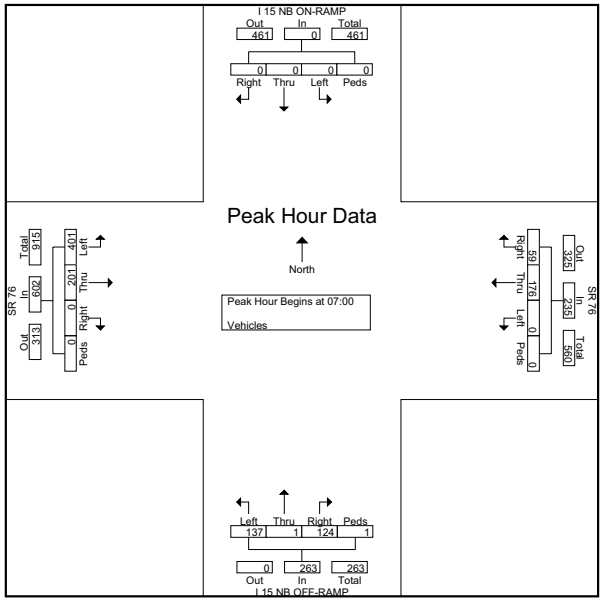

True Count

3401 First Ave #123
San Diego, CA 92103

File Name : 9049.06.I 15 NB OFF-RAMP.SR 76
Site Code : 00000000
Start Date : 6/3/2009
Page No : 3

	I 15 NB ON-RAMP Southbound					SR 76 Westbound					I 15 NB OFF-RAMP Northbound					SR 76 Eastbound					
Start Time	Left	Thru	Right	Peds	App. Total	Left	Thru	Right	Peds	App. Total	Left	Thru	Right	Peds	App. Total	Left	Thru	Right	Peds	App. Total	Int. Total
Peak Hour Analysis From 12:00 to 17:45 - Peak 1 of 1																					
Peak Hour for Entire Intersection Begins at 16:30																					
16:30	0	0	0	0	0	0	90	12	0	102	84	0	41	0	125	169	43	0	0	212	439
16:45	0	0	0	0	0	0	**95**	25	0	**120**	91	**2**	38	**1**	132	**198**	49	0	0	**247**	**499**
17:00	0	0	0	0	0	0	80	23	0	103	80	2	38	0	120	174	50	0	0	224	447
17:15	0	0	0	0	0	0	59	**32**	0	91	**97**	2	**45**	0	**144**	178	**68**	0	0	246	481
Total Volume	0	0	0	0	0	0	324	92	0	416	352	6	162	1	521	719	210	0	0	929	1866
% App. Total	0	0	0	0		0	77.9	22.1	0		67.6	1.2	31.1	0.2		77.4	22.6	0	0		
PHF	.000	.000	.000	.000	.000	.000	.853	.719	.000	.867	.907	.750	.900	.250	.905	.908	.772	.000	.000	.940	.935

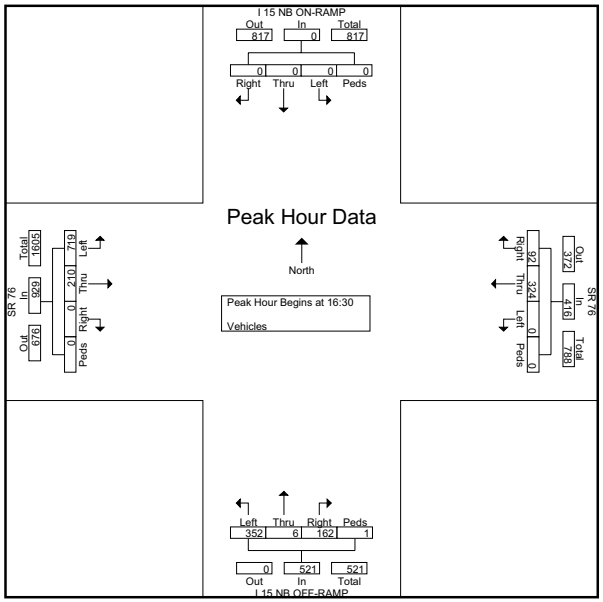

True Count

3401 First Ave #123
San Diego, CA 92103

File Name : 9095.01.PANKEY RD.SR-76
Site Code : 00000000
Start Date : 10/22/2009
Page No : 1

Groups Printed- Vehicles

	PANKEY RD Southbound				SR-76 Westbound				PANKEY RD Northbound				SR-76 Eastbound				
Start Time	Left	Thru	Right	Peds	Left	Thru	Right	Peds	Left	Thru	Right	Peds	Left	Thru	Right	Peds	Int. Total
07:00	0	0	1	0	0	52	0	0	4	0	1	0	0	39	0	0	97
07:15	0	0	0	0	0	45	0	0	5	0	1	0	0	76	0	0	127
07:30	0	0	0	0	2	58	0	0	7	0	2	0	0	80	1	1	151
07:45	0	0	1	0	3	71	0	0	5	0	3	0	2	69	1	0	155
Total	0	0	2	0	5	226	0	0	21	0	7	0	2	264	2	1	530
08:00	1	0	1	0	0	31	1	0	4	0	2	0	1	84	4	0	129
08:15	0	0	0	0	1	49	0	0	5	0	7	0	1	56	0	0	119
08:30	1	0	1	0	2	48	0	0	1	0	1	0	1	77	3	0	135
08:45	0	0	1	0	0	30	0	0	2	0	0	0	2	83	2	0	120
Total	2	0	3	0	3	158	1	0	12	0	10	0	5	300	9	0	503
*** BREAK ***																	
16:00	0	0	0	0	2	108	0	0	1	0	4	0	0	72	1	0	188
16:15	0	0	1	0	4	83	0	0	3	0	0	0	4	84	7	0	186
16:30	2	0	3	0	0	108	1	0	3	0	1	2	0	90	12	0	222
16:45	0	0	0	0	5	139	0	0	5	0	5	0	0	79	5	0	238
Total	2	0	4	0	11	438	1	0	12	0	10	2	4	325	25	0	834
17:00	0	0	2	0	1	79	0	0	1	0	2	0	0	88	4	0	177
17:15	0	0	0	1	3	88	0	0	1	0	1	0	0	103	11	0	208
17:30	0	0	0	0	1	101	0	0	3	0	2	0	0	83	11	0	201
17:45	0	0	0	0	1	73	0	0	4	0	0	0	0	80	8	0	166
Total	0	0	2	1	6	341	0	0	9	0	5	0	0	354	34	0	752
Grand Total	4	0	11	1	25	1163	2	0	54	0	32	2	11	1243	70	1	2619
Apprch %	25	0	68.8	6.2	2.1	97.7	0.2	0	61.4	0	36.4	2.3	0.8	93.8	5.3	0.1	
Total %	0.2	0	0.4	0	1	44.4	0.1	0	2.1	0	1.2	0.1	0.4	47.5	2.7	0	

True Count

3401 First Ave #123
San Diego, CA 92103

File Name : 9095.01.PANKEY RD.SR-76
Site Code : 00000000
Start Date : 10/22/2009
Page No : 2

	PANKEY RD Southbound					SR-76 Westbound					PANKEY RD Northbound					SR-76 Eastbound					
Start Time	Left	Thru	Right	Peds	App. Total	Left	Thru	Right	Peds	App. Total	Left	Thru	Right	Peds	App. Total	Left	Thru	Right	Peds	App. Total	Int. Total
Peak Hour Analysis From 07:00 to 11:45 - Peak 1 of 1																					
Peak Hour for Entire Intersection Begins at 07:15																					
07:15	0	0	0	0	0	0	45	0	0	45	5	0	1	0	6	0	76	0	0	76	127
07:30	0	0	0	0	0	2	58	0	0	60	**7**	0	2	0	**9**	0	80	1	**1**	82	151
07:45	0	0	**1**	0	1	**3**	**71**	0	0	**74**	5	0	**3**	0	8	**2**	69	1	0	72	**155**
08:00	**1**	0	1	0	**2**	0	31	**1**	0	32	4	0	2	0	6	1	**84**	**4**	0	**89**	129
Total Volume	1	0	2	0	3	5	205	1	0	211	21	0	8	0	29	3	309	6	1	319	562
% App. Total	33.3	0	66.7	0		2.4	97.2	0.5	0		72.4	0	27.6	0		0.9	96.9	1.9	0.3		
PHF	.250	.000	.500	.000	.375	.417	.722	.250	.000	.713	.750	.000	.667	.000	.806	.375	.920	.375	.250	.896	.906

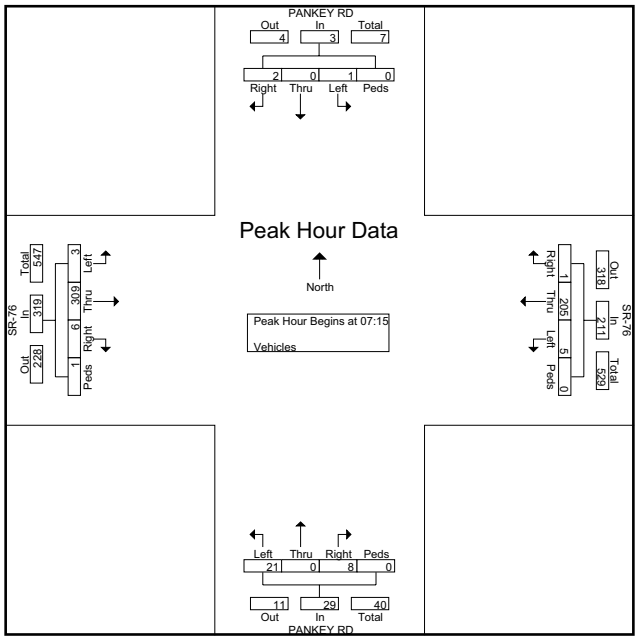

True Count

3401 First Ave #123
San Diego, CA 92103

File Name : 9095.01.PANKEY RD.SR-76
Site Code : 00000000
Start Date : 10/22/2009
Page No : 3

	PANKEY RD Southbound					SR-76 Westbound					PANKEY RD Northbound					SR-76 Eastbound					
Start Time	Left	Thru	Right	Peds	App. Total	Left	Thru	Right	Peds	App. Total	Left	Thru	Right	Peds	App. Total	Left	Thru	Right	Peds	App. Total	Int. Total
Peak Hour Analysis From 12:00 to 17:45 - Peak 1 of 1																					
Peak Hour for Entire Intersection Begins at 16:30																					
16:30	**2**	0	**3**	0	**5**	0	108	**1**	0	109	3	0	1	**2**	6	0	90	**12**	0	102	222
16:45	0	0	0	0	0	**5**	**139**	0	0	**144**	**5**	0	**5**	0	**10**	0	79	5	0	84	**238**
17:00	0	0	2	0	2	1	79	0	0	80	1	0	2	0	3	0	88	4	0	92	177
17:15	0	0	0	**1**	1	3	88	0	0	91	1	0	1	0	2	0	**103**	11	0	**114**	208
Total Volume	2	0	5	1	8	9	414	1	0	424	10	0	9	2	21	0	360	32	0	392	845
% App. Total	25	0	62.5	12.5		2.1	97.6	0.2	0		47.6	0	42.9	9.5		0	91.8	8.2	0		
PHF	.250	.000	.417	.250	.400	.450	.745	.250	.000	.736	.500	.000	.450	.250	.525	.000	.874	.667	.000	.860	.888

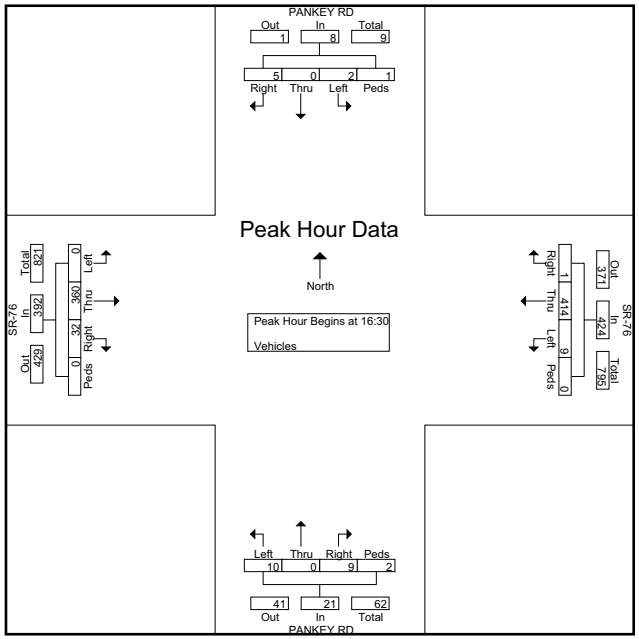

True Count

3401 First Ave #123
San Diego, CA 92103

File Name : 9095.02.RICE CANYON RD.SR-76
Site Code : 00000000
Start Date : 10/22/2009
Page No : 1

Groups Printed- Vehicles

	RICE CANYON RD Southbound				SR-76 Westbound				RICE CANYON RD Northbound				SR-76 Eastbound				
Start Time	Left	Thru	Right	Peds	Left	Thru	Right	Peds	Left	Thru	Right	Peds	Left	Thru	Right	Peds	Int. Total
07:00	3	0	5	0	0	50	4	0	0	0	0	0	2	65	0	0	129
07:15	4	0	7	0	0	35	1	0	0	0	0	0	4	72	0	0	123
07:30	7	0	7	0	0	75	3	0	0	0	0	0	1	70	0	0	163
07:45	1	0	5	0	0	49	1	0	0	0	0	0	4	74	0	0	134
Total	15	0	24	0	0	209	9	0	0	0	0	0	11	281	0	0	549
08:00	1	0	2	0	0	31	0	0	0	0	0	0	3	75	0	0	112
08:15	1	0	1	0	0	48	0	0	0	0	0	0	8	67	0	0	125
08:30	1	0	3	0	0	47	1	0	0	0	0	0	0	69	0	0	121
08:45	3	0	4	0	0	26	2	0	0	0	0	0	3	77	0	0	115
Total	6	0	10	0	0	152	3	0	0	0	0	0	14	288	0	0	473
*** BREAK ***																	
16:00	1	0	3	0	0	98	5	0	0	0	0	0	4	83	0	0	194
16:15	2	0	5	0	0	87	5	0	0	0	0	0	5	78	0	0	182
16:30	1	0	3	0	0	99	5	1	0	0	0	1	6	88	0	0	204
16:45	3	0	4	0	0	136	2	0	0	0	0	1	7	80	0	1	234
Total	7	0	15	0	0	420	17	1	0	0	0	2	22	329	0	1	814
17:00	0	0	3	0	0	81	4	0	0	0	0	0	4	82	0	0	174
17:15	0	0	5	1	0	79	3	0	0	0	0	0	9	96	0	0	193
17:30	2	0	2	0	0	104	5	0	0	0	0	0	8	84	0	0	205
17:45	3	0	3	0	0	69	1	0	0	0	0	0	6	72	0	0	154
Total	5	0	13	1	0	333	13	0	0	0	0	0	27	334	0	0	726
Grand Total	33	0	62	1	0	1114	42	1	0	0	0	2	74	1232	0	1	2562
Apprch %	34.4	0	64.6	1	0	96.3	3.6	0.1	0	0	0	100	5.7	94.3	0	0.1	
Total %	1.3	0	2.4	0	0	43.5	1.6	0	0	0	0	0.1	2.9	48.1	0	0	

True Count

3401 First Ave #123
San Diego, CA 92103

File Name : 9095.02.RICE CANYON RD.SR-76
Site Code : 00000000
Start Date : 10/22/2009
Page No : 2

	RICE CANYON RD Southbound					SR-76 Westbound					RICE CANYON RD Northbound					SR-76 Eastbound					
Start Time	Left	Thru	Right	Peds	App. Total	Left	Thru	Right	Peds	App. Total	Left	Thru	Right	Peds	App. Total	Left	Thru	Right	Peds	App. Total	Int. Total
Peak Hour Analysis From 07:00 to 11:45 - Peak 1 of 1																					
Peak Hour for Entire Intersection Begins at 07:00																					
07:00	3	0	5	0	8	0	50	**4**	0	54	0	0	0	0	0	2	65	0	0	67	129
07:15	4	0	**7**	0	11	0	35	1	0	36	0	0	0	0	0	**4**	72	0	0	76	123
07:30	**7**	0	7	0	**14**	0	**75**	3	0	**78**	0	0	0	0	0	1	70	0	0	71	**163**
07:45	1	0	5	0	6	0	49	1	0	50	0	0	0	0	0	4	**74**	0	0	**78**	134
Total Volume	15	0	24	0	39	0	209	9	0	218	0	0	0	0	0	11	281	0	0	292	549
% App. Total	38.5	0	61.5	0		0	95.9	4.1	0		0	0	0	0		3.8	96.2	0	0		
PHF	.536	.000	.857	.000	.696	.000	.697	.563	.000	.699	.000	.000	.000	.000	.000	.688	.949	.000	.000	.936	.842

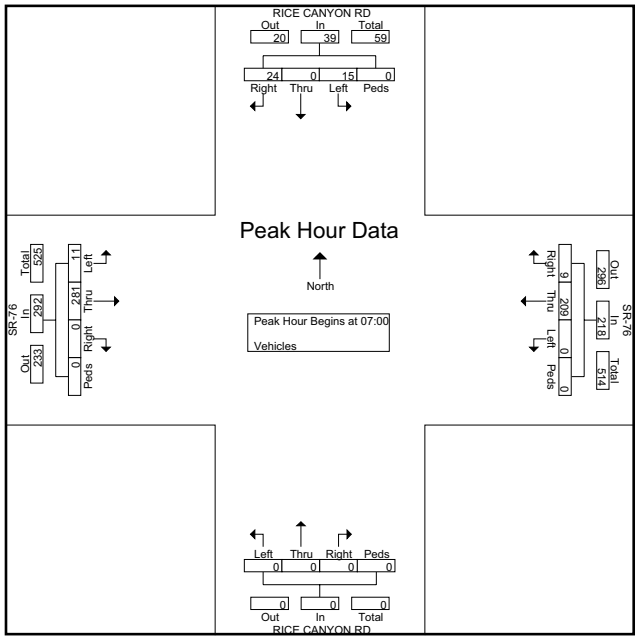

True Count

3401 First Ave #123
San Diego, CA 92103

File Name : 9095.02.RICE CANYON RD.SR-76
Site Code : 00000000
Start Date : 10/22/2009
Page No : 3

	RICE CANYON RD Southbound					SR-76 Westbound					RICE CANYON RD Northbound					SR-76 Eastbound					
Start Time	Left	Thru	Right	Peds	App. Total	Left	Thru	Right	Peds	App. Total	Left	Thru	Right	Peds	App. Total	Left	Thru	Right	Peds	App. Total	Int. Total
Peak Hour Analysis From 12:00 to 17:45 - Peak 1 of 1																					
Peak Hour for Entire Intersection Begins at 16:00																					
16:00	1	0	3	0	4	0	98	**5**	0	103	0	0	0	0	0	4	83	0	0	87	194
16:15	2	0	**5**	0	**7**	0	87	5	0	92	0	0	0	0	0	5	78	0	0	83	182
16:30	1	0	3	0	4	0	99	5	**1**	105	0	0	0	**1**	**1**	6	**88**	0	0	**94**	204
16:45	**3**	0	4	0	7	0	**136**	2	0	**138**	0	0	0	1	1	**7**	80	0	**1**	88	**234**
Total Volume	7	0	15	0	22	0	420	17	1	438	0	0	0	2	2	22	329	0	1	352	814
% App. Total	31.8	0	68.2	0		0	95.9	3.9	0.2		0	0	0	100		6.2	93.5	0	0.3		
PHF	.583	.000	.750	.000	.786	.000	.772	.850	.250	.793	.000	.000	.000	.500	.500	.786	.935	.000	.250	.936	.870

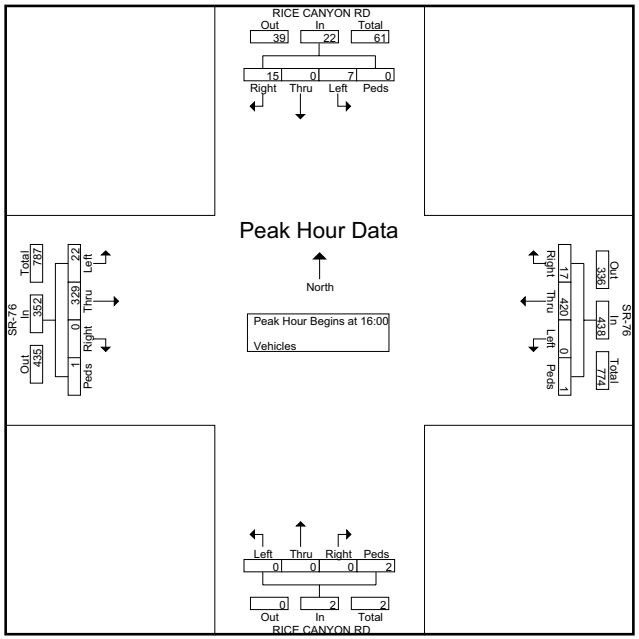

True Count

3401 First Ave #123
San Diego, CA 92103

File Name : 9095.03.COUSER CANYON RD.SR-76
Site Code : 00000000
Start Date : 10/21/2009
Page No : 1

Groups Printed- Vehicles

	COUSER CANYON RD Southbound				SR-76 Westbound				COUSER CANYON RD Northbound				SR-76 Eastbound				
Start Time	Left	Thru	Right	Peds	Left	Thru	Right	Peds	Left	Thru	Right	Peds	Left	Thru	Right	Peds	Int. Total
07:00	0	0	0	0	4	49	0	0	5	0	5	0	0	62	4	0	129
07:15	0	0	0	0	0	30	0	0	6	0	1	0	1	74	2	0	114
07:30	0	0	0	0	1	69	0	0	11	0	1	0	0	74	3	0	159
07:45	0	0	0	0	0	40	0	0	5	0	0	0	0	76	1	0	122
Total	0	0	0	0	5	188	0	0	27	0	7	0	1	286	10	0	524
08:00	0	0	0	0	0	29	0	0	1	0	0	0	0	70	6	0	106
08:15	0	0	0	0	0	45	0	0	4	0	0	0	0	67	2	0	118
08:30	0	0	0	0	0	43	0	0	4	0	0	0	0	67	3	0	117
08:45	0	0	0	0	1	25	0	0	3	0	0	0	0	76	5	0	110
Total	0	0	0	0	1	142	0	0	12	0	0	0	0	280	16	0	451

*** BREAK ***

16:00	0	0	0	0	2	104	0	0	4	0	3	0	0	84	1	0	198
16:15	0	0	0	0	4	86	0	0	4	0	2	0	0	82	2	0	180
16:30	0	0	0	0	3	103	0	0	4	0	3	0	0	86	2	0	201
16:45	0	0	0	0	1	136	0	0	4	0	0	0	0	73	8	0	222
Total	0	0	0	0	10	429	0	0	16	0	8	0	0	325	13	0	801
17:00	0	0	0	0	1	73	0	0	10	0	0	0	0	81	3	0	168
17:15	0	0	0	1	1	85	0	1	1	0	1	0	0	91	4	0	185
17:30	0	0	0	0	2	106	0	0	4	0	0	0	0	81	3	0	196
17:45	0	0	0	0	0	64	0	0	3	0	0	0	0	69	7	0	143
Total	0	0	0	1	4	328	0	1	18	0	1	0	0	322	17	0	692
Grand Total	0	0	0	1	20	1087	0	1	73	0	16	0	1	1213	56	0	2468
Apprch %	0	0	0	100	1.8	98.1	0	0.1	82	0	18	0	0.1	95.5	4.4	0	
Total %	0	0	0	0	0.8	44	0	0	3	0	0.6	0	0	49.1	2.3	0	

True Count

3401 First Ave #123
San Diego, CA 92103

File Name : 9095.03.COUSER CANYON RD.SR-76
Site Code : 00000000
Start Date : 10/21/2009
Page No : 2

	COUSER CANYON RD Southbound					SR-76 Westbound					COUSER CANYON RD Northbound					SR-76 Eastbound					
Start Time	Left	Thru	Right	Peds	App. Total	Left	Thru	Right	Peds	App. Total	Left	Thru	Right	Peds	App. Total	Left	Thru	Right	Peds	App. Total	Int. Total
Peak Hour Analysis From 07:00 to 11:45 - Peak 1 of 1																					
Peak Hour for Entire Intersection Begins at 07:00																					
07:00	0	0	0	0	0	**4**	49	0	0	53	5	0	**5**	0	10	0	62	**4**	0	66	129
07:15	0	0	0	0	0	0	30	0	0	30	6	0	1	0	7	**1**	74	2	0	**77**	114
07:30	0	0	0	0	0	1	**69**	0	0	**70**	**11**	0	1	0	**12**	0	74	3	0	77	**159**
07:45	0	0	0	0	0	0	40	0	0	40	5	0	0	0	5	0	**76**	1	0	77	122
Total Volume	0	0	0	0	0	5	188	0	0	193	27	0	7	0	34	1	286	10	0	297	524
% App. Total	0	0	0	0		2.6	97.4	0	0		79.4	0	20.6	0		0.3	96.3	3.4	0		
PHF	.000	.000	.000	.000	.000	.313	.681	.000	.000	.689	.614	.000	.350	.000	.708	.250	.941	.625	.000	.964	.824

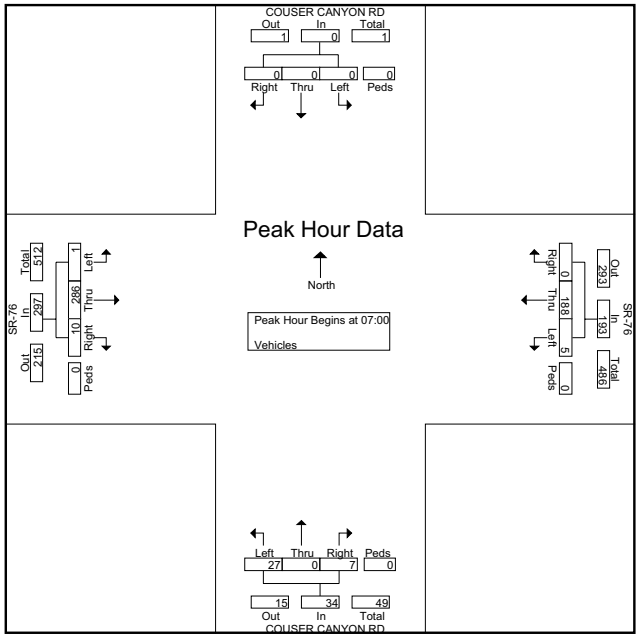

True Count
3401 First Ave #123
San Diego, CA 92103

File Name : 9095.03.COUSER CANYON RD.SR-76
Site Code : 00000000
Start Date : 10/21/2009
Page No : 3

	COUSER CANYON RD Southbound					SR-76 Westbound					COUSER CANYON RD Northbound					SR-76 Eastbound					
Start Time	Left	Thru	Right	Peds	App. Total	Left	Thru	Right	Peds	App. Total	Left	Thru	Right	Peds	App. Total	Left	Thru	Right	Peds	App. Total	Int. Total
Peak Hour Analysis From 12:00 to 17:45 - Peak 1 of 1																					
Peak Hour for Entire Intersection Begins at 16:00																					
16:00	0	0	0	0	0	2	104	0	0	106	**4**	0	**3**	0	**7**	0	84	1	0	85	198
16:15	0	0	0	0	0	**4**	86	0	0	90	4	0	2	0	6	0	82	2	0	84	180
16:30	0	0	0	0	0	3	103	0	0	106	4	0	3	0	7	0	**86**	2	0	**88**	201
16:45	0	0	0	0	0	1	**136**	0	0	**137**	4	0	0	0	4	0	73	**8**	0	81	**222**
Total Volume	0	0	0	0	0	10	429	0	0	439	16	0	8	0	24	0	325	13	0	338	801
% App. Total	0	0	0			2.3	97.7	0	0		66.7	0	33.3	0		0	96.2	3.8	0		
PHF	.000	.000	.000	.000	.000	.625	.789	.000	.000	.801	1.00	.000	.667	.000	.857	.000	.945	.406	.000	.960	.902

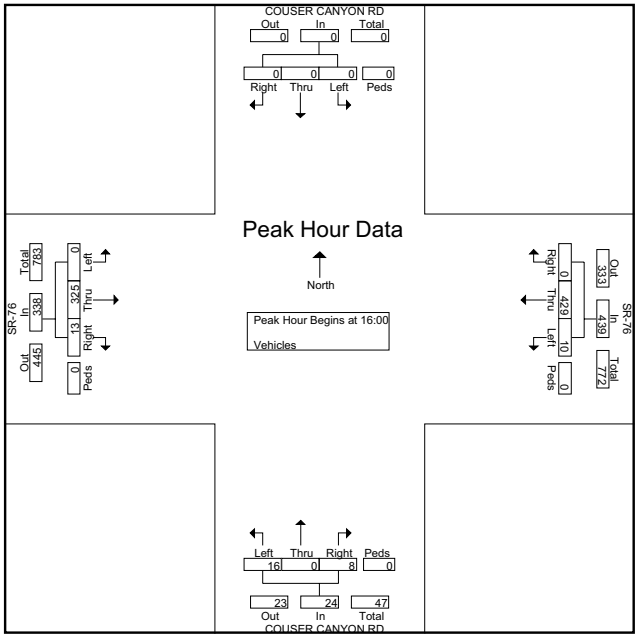

True Count
3401 First Ave #123
San Diego, CA 92103

File Name : 9002.03.PALA MISSION RD.SR 76 (PALA RD)
Site Code : 00000000
Start Date : 2/24/2009
Page No : 1

Groups Printed- Vehicles

	PALA MISSION RD Southbound				SR 76 (PALA RD) Westbound				PALA MISSION RD Northbound				SR 76 (PALA RD) Eastbound				
Start Time	Left	Thru	Right	Peds	Left	Thru	Right	Peds	Left	Thru	Right	Peds	Left	Thru	Right	Peds	Int. Total
07:00	2	5	18	0	0	18	3	0	2	3	1	0	20	26	0	0	98
07:15	0	0	28	0	3	26	1	0	1	4	0	0	26	20	0	0	109
07:30	3	2	25	0	0	26	2	0	3	0	1	0	23	44	1	0	130
07:45	11	4	40	0	2	20	3	0	5	1	0	0	31	48	2	0	167
Total	16	11	111	0	5	90	9	0	11	8	2	0	100	138	3	0	504
08:00	5	8	15	0	0	20	8	0	1	3	2	1	24	38	2	0	127
08:15	3	2	27	0	2	19	4	0	2	1	0	0	13	28	1	0	102
08:30	4	0	28	0	2	25	3	0	1	3	0	0	18	46	4	0	134
08:45	6	6	24	1	3	22	4	0	1	2	2	1	14	25	3	1	115
Total	18	16	94	1	7	86	19	0	5	9	4	2	69	137	10	1	478
*** BREAK ***																	
16:00	5	3	27	0	10	52	4	0	7	2	1	0	39	43	3	0	196
16:15	3	2	31	0	7	36	6	0	4	8	1	0	31	39	5	0	173
16:30	7	3	23	0	4	34	4	0	6	7	1	0	42	45	6	0	182
16:45	7	10	19	0	5	27	2	0	9	9	2	0	36	31	9	0	166
Total	22	18	100	0	26	149	16	0	26	26	5	0	148	158	23	0	717
17:00	4	6	20	0	6	37	2	0	5	10	0	0	39	46	4	0	179
17:15	5	5	23	1	5	46	2	0	4	9	2	0	32	41	7	1	183
17:30	2	8	24	0	7	33	5	0	4	11	1	0	41	43	3	1	183
17:45	2	5	18	1	8	37	3	0	4	7	1	8	34	25	8	8	169
Total	13	24	85	2	26	153	12	0	17	37	4	8	146	155	22	10	714
Grand Total	69	69	390	3	64	478	56	0	59	80	15	10	463	588	58	11	2413
Apprch %	13	13	73.4	0.6	10.7	79.9	9.4	0	36	48.8	9.1	6.1	41.3	52.5	5.2	1	
Total %	2.9	2.9	16.2	0.1	2.7	19.8	2.3	0	2.4	3.3	0.6	0.4	19.2	24.4	2.4	0.5	

True Count

3401 First Ave #123
San Diego, CA 92103

File Name : 9002.03.PALA MISSION RD.SR 76 (PALA RD)
Site Code : 00000000
Start Date : 2/24/2009
Page No : 2

	PALA MISSION RD Southbound					SR 76 (PALA RD) Westbound					PALA MISSION RD Northbound					SR 76 (PALA RD) Eastbound					
Start Time	Left	Thru	Right	Peds	App. Total	Left	Thru	Right	Peds	App. Total	Left	Thru	Right	Peds	App. Total	Left	Thru	Right	Peds	App. Total	Int. Total
Peak Hour Analysis From 07:00 to 11:45 - Peak 1 of 1																					
Peak Hour for Entire Intersection Begins at 07:15																					
07:15	0	0	28	0	28	**3**	**26**	1	0	**30**	1	**4**	0	0	5	26	20	0	0	46	109
07:30	3	2	25	0	30	0	26	2	0	28	3	0	1	0	4	23	44	1	0	68	130
07:45	**11**	4	**40**	0	**55**	2	20	3	0	25	**5**	1	0	0	6	**31**	**48**	**2**	0	**81**	**167**
08:00	5	**8**	15	0	28	0	20	**8**	0	28	1	3	**2**	**1**	**7**	24	38	2	0	64	127
Total Volume	19	14	108	0	141	5	92	14	0	111	10	8	3	1	22	104	150	5	0	259	533
% App. Total	13.5	9.9	76.6	0		4.5	82.9	12.6	0		45.5	36.4	13.6	4.5		40.2	57.9	1.9	0		
PHF	.432	.438	.675	.000	.641	.417	.885	.438	.000	.925	.500	.500	.375	.250	.786	.839	.781	.625	.000	.799	.798

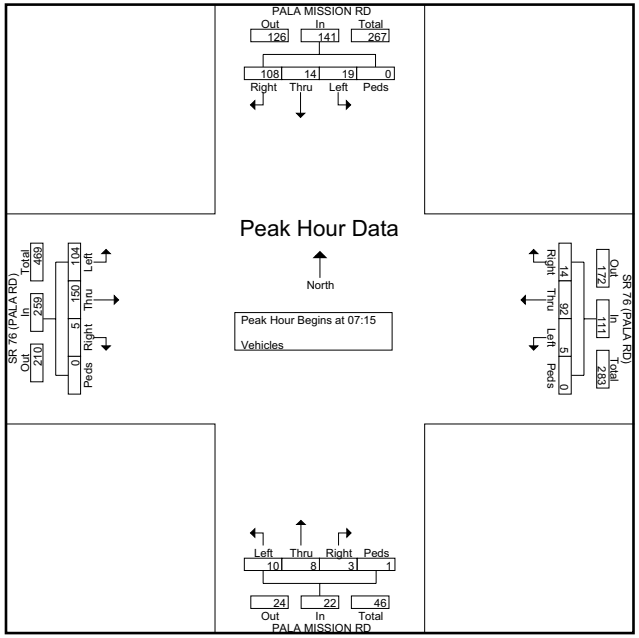

True Count

3401 First Ave #123
San Diego, CA 92103

File Name : 9002.03.PALA MISSION RD.SR 76 (PALA RD)
Site Code : 00000000
Start Date : 2/24/2009
Page No : 3

	PALA MISSION RD Southbound					SR 76 (PALA RD) Westbound					PALA MISSION RD Northbound					SR 76 (PALA RD) Eastbound					
Start Time	Left	Thru	Right	Peds	App. Total	Left	Thru	Right	Peds	App. Total	Left	Thru	Right	Peds	App. Total	Left	Thru	Right	Peds	App. Total	Int. Total
Peak Hour Analysis From 12:00 to 17:45 - Peak 1 of 1																					
Peak Hour for Entire Intersection Begins at 16:00																					
16:00	5	3	27	0	35	**10**	**52**	4	0	**66**	7	2	1	0	10	39	43	3	0	85	**196**
16:15	3	2	**31**	0	**36**	7	36	**6**	0	49	4	8	1	0	13	31	39	5	0	75	173
16:30	**7**	3	23	0	33	4	34	4	0	42	6	7	1	0	14	**42**	**45**	6	0	**93**	182
16:45	7	**10**	19	0	36	5	27	2	0	34	**9**	**9**	**2**	0	**20**	36	31	**9**	0	76	166
Total Volume	22	18	100	0	140	26	149	16	0	191	26	26	5	0	57	148	158	23	0	329	717
% App. Total	15.7	12.9	71.4	0		13.6	78	8.4	0		45.6	45.6	8.8	0		45	48	7	0		
PHF	.786	.450	.806	.000	.972	.650	.716	.667	.000	.723	.722	.722	.625	.000	.713	.881	.878	.639	.000	.884	.915

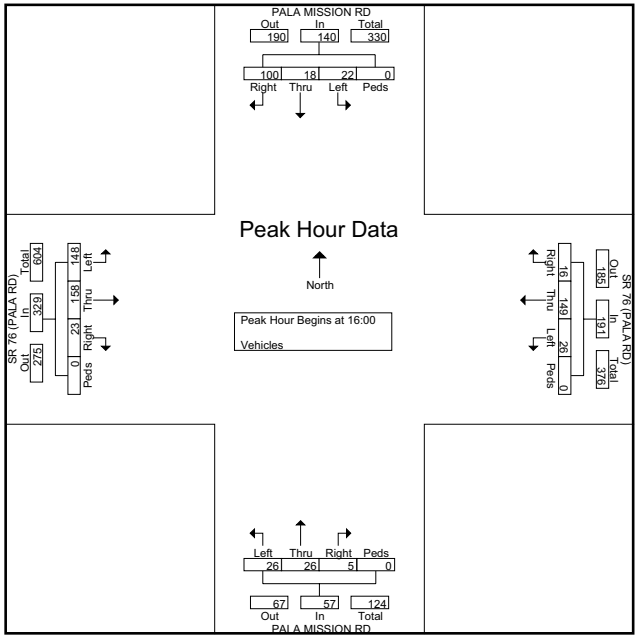

True Count

3401 First Ave #123
San Diego, CA 92103

File Name : 9095.05.PALA TEMECULA RD.PALA MISSION RD
Site Code : 00000000
Start Date : 10/22/2009
Page No : 1

Groups Printed- Vehicles

	PALA TEMECULA RD Southbound				PALA MISSION RD Westbound				PALA TEMECULA RD Northbound				PALA MISSION RD Eastbound				
Start Time	Left	Thru	Right	Peds	Left	Thru	Right	Peds	Left	Thru	Right	Peds	Left	Thru	Right	Peds	Int. Total
07:00	41	8	19	0	0	3	21	0	0	0	1	2	16	8	0	0	119
07:15	29	7	26	1	0	4	20	2	0	0	0	3	11	10	1	0	114
07:30	56	15	46	1	0	4	18	2	0	3	4	9	24	13	2	0	197
07:45	41	10	33	0	1	3	28	0	0	3	4	0	19	13	1	0	156
Total	167	40	124	2	1	14	87	4	0	6	9	14	70	44	4	0	586
08:00	35	4	20	0	1	5	20	0	1	2	2	0	16	8	0	0	114
08:15	32	1	33	0	0	3	26	0	0	1	1	0	12	5	1	0	115
08:30	34	2	21	0	0	1	12	0	4	2	0	1	12	4	0	0	93
08:45	41	8	39	0	0	5	18	1	0	2	1	1	14	3	0	0	133
Total	142	15	113	0	1	14	76	1	5	7	4	2	54	20	1	0	455
*** BREAK ***																	
16:00	44	7	35	0	0	7	46	2	1	5	2	1	25	13	2	0	190
16:15	47	5	37	2	1	9	40	3	0	4	1	3	32	6	2	0	192
16:30	49	6	38	0	0	10	59	1	0	3	0	0	52	7	1	0	226
16:45	38	8	28	0	0	9	55	0	0	4	1	3	37	6	1	0	190
Total	178	26	138	2	1	35	200	6	1	16	4	7	146	32	6	0	798
17:00	48	3	21	0	0	9	72	0	1	9	2	0	45	9	1	0	220
17:15	26	7	32	0	1	6	61	1	0	8	0	1	47	9	0	0	199
17:30	29	5	38	0	0	7	30	0	2	2	4	1	34	5	1	0	158
17:45	21	3	35	0	2	7	38	3	1	3	1	0	19	12	1	0	146
Total	124	18	126	0	3	29	201	4	4	22	7	2	145	35	3	0	723
Grand Total	611	99	501	4	6	92	564	15	10	51	24	25	415	131	14	0	2562
Apprch %	50.3	8.1	41.2	0.3	0.9	13.6	83.3	2.2	9.1	46.4	21.8	22.7	74.1	23.4	2.5	0	
Total %	23.8	3.9	19.6	0.2	0.2	3.6	22	0.6	0.4	2	0.9	1	16.2	5.1	0.5	0	

True Count

3401 First Ave #123
San Diego, CA 92103

File Name : 9095.05.PALA TEMECULA RD.PALA MISSION RD
Site Code : 00000000
Start Date : 10/22/2009
Page No : 2

	PALA TEMECULA RD Southbound					PALA MISSION RD Westbound					PALA TEMECULA RD Northbound					PALA MISSION RD Eastbound					
Start Time	Left	Thru	Right	Peds	App. Total	Left	Thru	Right	Peds	App. Total	Left	Thru	Right	Peds	App. Total	Left	Thru	Right	Peds	App. Total	Int. Total
Peak Hour Analysis From 07:00 to 11:45 - Peak 1 of 1																					
Peak Hour for Entire Intersection Begins at 07:00																					
07:00	41	8	19	0	68	0	3	21	0	24	0	0	1	2	3	16	8	0	0	24	119
07:15	29	7	26	**1**	63	0	**4**	20	**2**	26	0	0	0	3	3	11	10	1	0	22	114
07:30	**56**	**15**	**46**	1	**118**	0	4	18	2	24	0	**3**	**4**	**9**	**16**	**24**	**13**	**2**	0	**39**	**197**
07:45	41	10	33	0	84	**1**	3	**28**	0	**32**	0	3	4	0	7	19	13	1	0	33	156
Total Volume	167	40	124	2	333	1	14	87	4	106	0	6	9	14	29	70	44	4	0	118	586
% App. Total	50.2	12	37.2	0.6		0.9	13.2	82.1	3.8		0	20.7	31	48.3		59.3	37.3	3.4	0		
PHF	.746	.667	.674	.500	.706	.250	.875	.777	.500	.828	.000	.500	.563	.389	.453	.729	.846	.500	.000	.756	.744

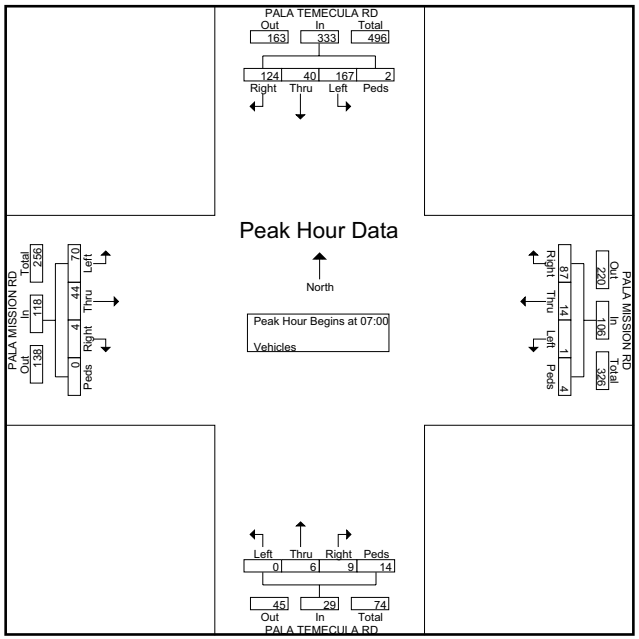

True Count

3401 First Ave #123
San Diego, CA 92103

File Name : 9095.05.PALA TEMECULA RD.PALA MISSION RD
Site Code : 00000000
Start Date : 10/22/2009
Page No : 3

	PALA TEMECULA RD Southbound					PALA MISSION RD Westbound					PALA TEMECULA RD Northbound					PALA MISSION RD Eastbound					
Start Time	Left	Thru	Right	Peds	App. Total	Left	Thru	Right	Peds	App. Total	Left	Thru	Right	Peds	App. Total	Left	Thru	Right	Peds	App. Total	Int. Total
Peak Hour Analysis From 12:00 to 17:45 - Peak 1 of 1																					
Peak Hour for Entire Intersection Begins at 16:30																					
16:30	**49**	6	**38**	0	**93**	0	**10**	59	**1**	70	0	3	0	0	3	**52**	7	**1**	0	**60**	**226**
16:45	38	**8**	28	0	74	0	9	55	0	64	0	4	1	**3**	8	37	6	1	0	44	190
17:00	48	3	21	0	72	0	9	**72**	0	**81**	**1**	**9**	**2**	0	**12**	45	**9**	1	0	55	220
17:15	26	7	32	0	65	**1**	6	61	1	69	0	8	0	1	9	47	9	0	0	56	199
Total Volume	161	24	119	0	304	1	34	247	2	284	1	24	3	4	32	181	31	3	0	215	835
% App. Total	53	7.9	39.1	0		0.4	12	87	0.7		3.1	75	9.4	12.5		84.2	14.4	1.4	0		
PHF	.821	.750	.783	.000	.817	.250	.850	.858	.500	.877	.250	.667	.375	.333	.667	.870	.861	.750	.000	.896	.924

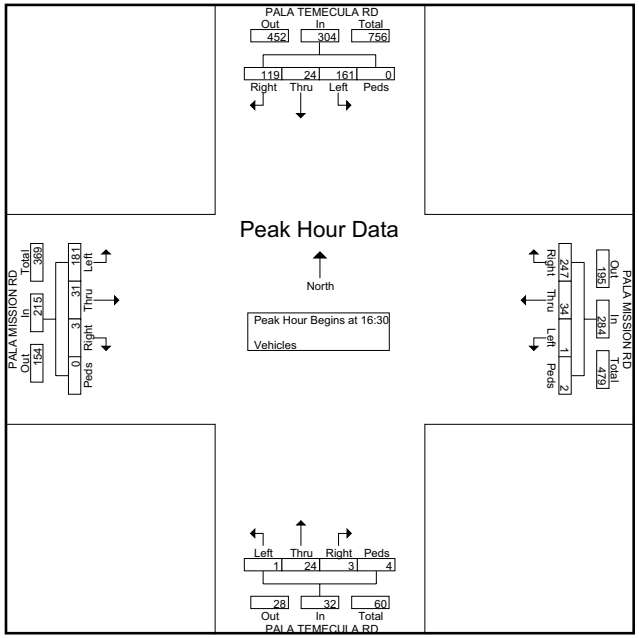

True Count

4401 Twain Ave, Suite 27
San Diego, CA 92120

File Name : 1096.02.BRITTIAN RD.MISSION RD SR-76
Site Code : 00000000
Start Date : 12/2/2010
Page No : 1

Groups Printed- Unshifted

	BRITTIAN RD Southbound				MISSION RD SR-76 Westbound				BRITTIAN RD Northbound				MISSION RD SR-76 Eastbound				
Start Time	Left	Thru	Right	Peds	Left	Thru	Right	Peds	Left	Thru	Right	Peds	Left	Thru	Right	Peds	Int. Total
07:00	0	0	0	0	0	22	0	0	0	0	0	0	1	27	0	0	50
07:15	0	0	0	0	0	28	0	0	0	0	0	0	1	29	0	0	58
07:30	0	0	0	0	0	21	1	0	0	0	0	0	0	36	0	0	58
07:45	1	0	2	0	0	24	1	0	0	0	0	0	3	61	0	0	92
Total	1	0	2	0	0	95	2	0	0	0	0	0	5	153	0	0	258
08:00	0	0	2	0	0	21	0	0	0	0	0	0	1	37	0	0	61
08:15	0	0	0	0	0	30	0	0	0	0	0	0	0	34	0	0	64
08:30	0	0	0	0	0	28	0	0	0	0	0	0	0	41	0	0	69
08:45	0	0	0	0	0	24	0	0	0	0	0	0	0	30	0	0	54
Total	0	0	2	0	0	103	0	0	0	0	0	0	1	142	0	0	248
*** BREAK ***																	
16:00	0	0	0	0	0	43	0	0	0	0	0	0	0	41	0	0	84
16:15	1	0	1	0	0	47	0	0	0	0	0	0	1	40	0	0	90
16:30	0	0	0	1	0	44	3	0	0	0	0	0	3	58	0	0	109
16:45	0	0	0	0	0	51	1	0	0	0	0	0	0	34	0	0	86
Total	1	0	1	1	0	185	4	0	0	0	0	0	4	173	0	0	369
17:00	0	0	1	0	0	27	1	0	0	0	0	0	0	37	0	0	66
17:15	0	0	1	0	0	53	0	0	0	0	0	0	0	42	0	0	96
17:30	0	0	1	0	0	30	1	0	0	0	0	0	0	33	0	0	65
17:45	0	0	0	0	0	26	0	0	0	0	0	0	0	37	0	0	63
Total	0	0	3	0	0	136	2	0	0	0	0	0	0	149	0	0	290
Grand Total	2	0	8	1	0	519	8	0	0	0	0	0	10	617	0	0	1165
Apprch %	18.2	0	72.7	9.1	0	98.5	1.5	0	0	0	0	0	1.6	98.4	0	0	
Total %	0.2	0	0.7	0.1	0	44.5	0.7	0	0	0	0	0	0.9	53	0	0	

True Count

4401 Twain Ave, Suite 27
San Diego, CA 92120

File Name : 1096.02.BRITTIAN RD.MISSION RD SR-76
Site Code : 00000000
Start Date : 12/2/2010
Page No : 2

	BRITTIAN RD Southbound					MISSION RD SR-76 Westbound					BRITTIAN RD Northbound					MISSION RD SR-76 Eastbound					
Start Time	Left	Thru	Right	Peds	App. Total	Left	Thru	Right	Peds	App. Total	Left	Thru	Right	Peds	App. Total	Left	Thru	Right	Peds	App. Total	Int. Total
Peak Hour Analysis From 07:00 to 11:45 - Peak 1 of 1																					
Peak Hour for Entire Intersection Begins at 07:45																					
07:45	**1**	0	**2**	0	**3**	0	24	**1**	0	25	0	0	0	0	0	**3**	**61**	0	0	**64**	**92**
08:00	0	0	2	0	2	0	21	0	0	21	0	0	0	0	0	1	37	0	0	38	61
08:15	0	0	0	0	0	0	**30**	0	0	**30**	0	0	0	0	0	0	34	0	0	34	64
08:30	0	0	0	0	0	0	28	0	0	28	0	0	0	0	0	0	41	0	0	41	69
Total Volume	1	0	4	0	5	0	103	1	0	104	0	0	0	0	0	4	173	0	0	177	286
% App. Total	20	0	80	0		0	99	1	0		0	0	0	0		2.3	97.7	0	0		
PHF	.250	.000	.500	.000	.417	.000	.858	.250	.000	.867	.000	.000	.000	.000	.000	.333	.709	.000	.000	.691	.777

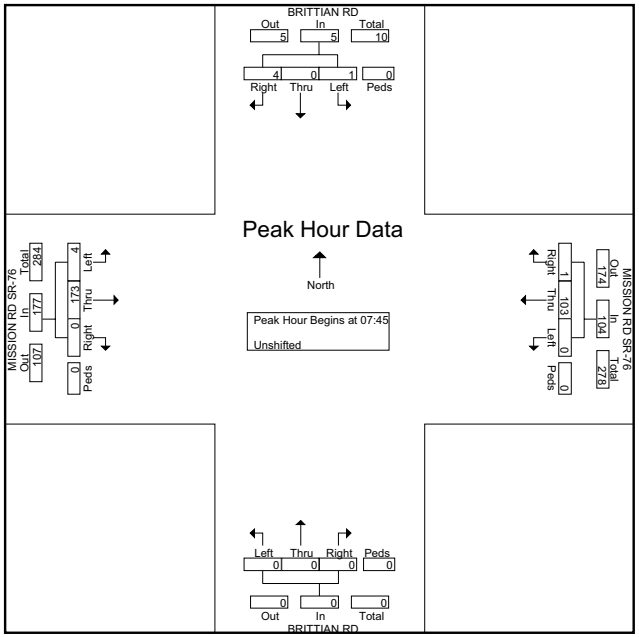

True Count

4401 Twain Ave, Suite 27
San Diego, CA 92120

File Name : 1096.02.BRITTIAN RD.MISSION RD SR-76
Site Code : 00000000
Start Date : 12/2/2010
Page No : 3

	BRITTIAN RD Southbound					MISSION RD SR-76 Westbound					BRITTIAN RD Northbound					MISSION RD SR-76 Eastbound					
Start Time	Left	Thru	Right	Peds	App. Total	Left	Thru	Right	Peds	App. Total	Left	Thru	Right	Peds	App. Total	Left	Thru	Right	Peds	App. Total	Int. Total
Peak Hour Analysis From 12:00 to 17:45 - Peak 1 of 1																					
Peak Hour for Entire Intersection Begins at 16:00																					
16:00	0	0	0	0	0	0	43	0	0	43	0	0	0	0	0	0	41	0	0	41	84
16:15	**1**	0	**1**	0	**2**	0	47	0	0	47	0	0	0	0	0	1	40	0	0	41	90
16:30	0	0	0	**1**	1	0	44	**3**	0	47	0	0	0	0	0	**3**	**58**	0	0	**61**	**109**
16:45	0	0	0	0	0	0	**51**	1	0	**52**	0	0	0	0	0	0	34	0	0	34	86
Total Volume	1	0	1	1	3	0	185	4	0	189	0	0	0	0	0	4	173	0	0	177	369
% App. Total	33.3	0	33.3	33.3		0	97.9	2.1	0		0	0	0	0		2.3	97.7	0	0		
PHF	.250	.000	.250	.250	.375	.000	.907	.333	.000	.909	.000	.000	.000	.000	.000	.333	.746	.000	.000	.725	.846

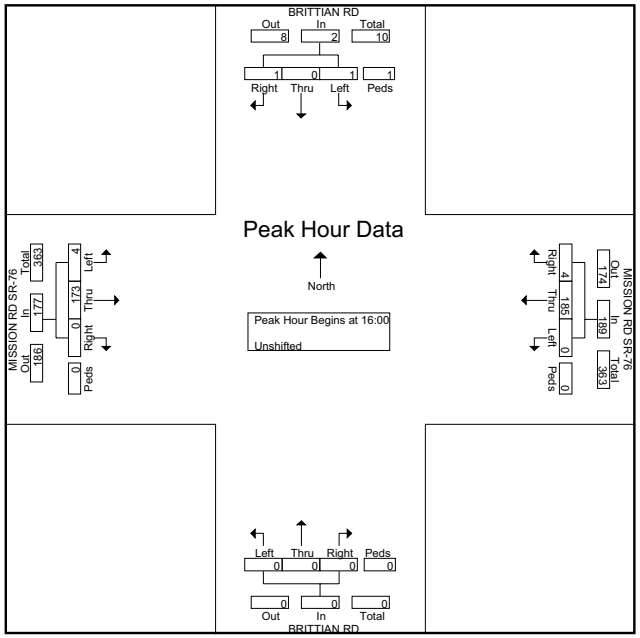

True Count

3401 First Ave #123
San Diego, CA 92103

File Name : 9095.06.PALA MISSION RD.SR-76
Site Code : 00000000
Start Date : 10/22/2009
Page No : 1

Groups Printed- Vehicles

	PALA MISSION RD Southbound				SR-76 Westbound				PALA MISSION RD Northbound				SR-76 Eastbound				
Start Time	Left	Thru	Right	Peds	Left	Thru	Right	Peds	Left	Thru	Right	Peds	Left	Thru	Right	Peds	Int. Total
07:00	28	0	0	0	0	22	17	0	0	0	0	0	2	30	0	0	99
07:15	26	0	0	0	0	26	22	0	0	0	0	0	2	35	0	0	111
07:30	41	0	1	0	0	21	23	0	0	0	0	0	0	57	0	0	143
07:45	35	0	0	0	0	17	36	0	0	0	0	0	2	45	0	0	135
Total	130	0	1	0	0	86	98	0	0	0	0	0	6	167	0	0	488
08:00	26	0	1	0	0	23	20	0	0	0	0	0	3	32	0	0	105
08:15	34	0	1	0	0	27	27	0	0	0	0	0	1	39	0	0	129
08:30	29	0	2	0	0	17	14	0	0	0	0	0	3	37	0	0	102
08:45	31	0	0	0	0	30	25	0	0	0	0	0	5	50	0	0	141
Total	120	0	4	0	0	97	86	0	0	0	0	0	12	158	0	0	477
*** BREAK ***																	
16:00	43	0	1	0	0	56	40	0	0	0	0	0	1	42	0	0	183
16:15	47	0	0	0	0	54	50	0	0	0	0	0	0	43	0	0	194
16:30	45	0	2	0	0	59	43	0	0	0	0	0	1	52	0	0	202
16:45	32	0	0	0	0	58	54	0	0	0	0	0	1	48	0	0	193
Total	167	0	3	0	0	227	187	0	0	0	0	0	3	185	0	0	772
17:00	45	0	1	0	0	45	57	0	0	0	0	0	0	41	0	0	189
17:15	33	0	1	0	0	54	54	0	0	0	0	0	2	41	0	0	185
17:30	31	0	3	0	0	39	42	0	0	0	0	0	1	38	0	0	154
17:45	18	0	0	0	0	38	39	0	0	0	0	0	4	47	0	0	146
Total	127	0	5	0	0	176	192	0	0	0	0	0	7	167	0	0	674
Grand Total	544	0	13	0	0	586	563	0	0	0	0	0	28	677	0	0	2411
Apprch %	97.7	0	2.3	0	0	51	49	0	0	0	0	0	4	96	0	0	
Total %	22.6	0	0.5	0	0	24.3	23.4	0	0	0	0	0	1.2	28.1	0	0	

True Count

3401 First Ave #123
San Diego, CA 92103

File Name : 9095.06.PALA MISSION RD.SR-76
Site Code : 00000000
Start Date : 10/22/2009
Page No : 2

	PALA MISSION RD Southbound					SR-76 Westbound					PALA MISSION RD Northbound					SR-76 Eastbound					
Start Time	Left	Thru	Right	Peds	App. Total	Left	Thru	Right	Peds	App. Total	Left	Thru	Right	Peds	App. Total	Left	Thru	Right	Peds	App. Total	Int. Total
Peak Hour Analysis From 07:00 to 11:45 - Peak 1 of 1																					
Peak Hour for Entire Intersection Begins at 07:30																					
07:30	**41**	0	**1**	0	**42**	0	21	23	0	44	0	0	0	0	0	0	**57**	0	0	**57**	**143**
07:45	35	0	0	0	35	0	17	**36**	0	53	0	0	0	0	0	2	45	0	0	47	135
08:00	26	0	1	0	27	0	23	20	0	43	0	0	0	0	0	**3**	32	0	0	35	105
08:15	34	0	1	0	35	0	**27**	27	0	**54**	0	0	0	0	0	1	39	0	0	40	129
Total Volume	136	0	3	0	139	0	88	106	0	194	0	0	0	0	0	6	173	0	0	179	512
% App. Total	97.8	0	2.2	0		0	45.4	54.6	0		0	0	0	0		3.4	96.6	0	0		
PHF	.829	.000	.750	.000	.827	.000	.815	.736	.000	.898	.000	.000	.000	.000	.000	.500	.759	.000	.000	.785	.895

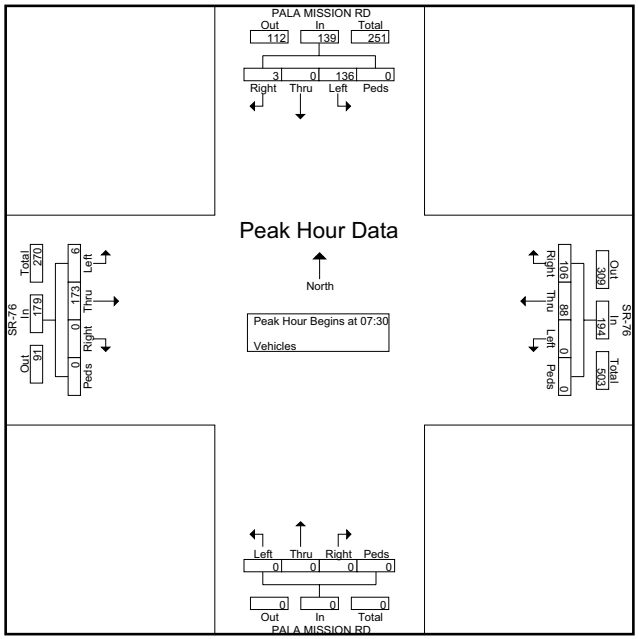

True Count

3401 First Ave #123
San Diego, CA 92103

File Name : 9095.06.PALA MISSION RD.SR-76
Site Code : 00000000
Start Date : 10/22/2009
Page No : 3

	PALA MISSION RD Southbound					SR-76 Westbound					PALA MISSION RD Northbound					SR-76 Eastbound					
Start Time	Left	Thru	Right	Peds	App. Total	Left	Thru	Right	Peds	App. Total	Left	Thru	Right	Peds	App. Total	Left	Thru	Right	Peds	App. Total	Int. Total
Peak Hour Analysis From 12:00 to 17:45 - Peak 1 of 1																					
Peak Hour for Entire Intersection Begins at 16:15																					
16:15	**47**	0	0	0	**47**	0	54	50	0	104	0	0	0	0	0	0	43	0	0	43	194
16:30	45	0	**2**	0	47	0	**59**	43	0	102	0	0	0	0	0	**1**	**52**	0	0	**53**	**202**
16:45	32	0	0	0	32	0	58	54	0	**112**	0	0	0	0	0	1	48	0	0	49	193
17:00	45	0	1	0	46	0	45	**57**	0	102	0	0	0	0	0	0	41	0	0	41	189
Total Volume	169	0	3	0	172	0	216	204	0	420	0	0	0	0	0	2	184	0	0	186	778
% App. Total	98.3	0	1.7	0		0	51.4	48.6	0		0	0	0	0		1.1	98.9	0	0		
PHF	.899	.000	.375	.000	.915	.000	.915	.895	.000	.938	.000	.000	.000	.000	.000	.500	.885	.000	.000	.877	.963

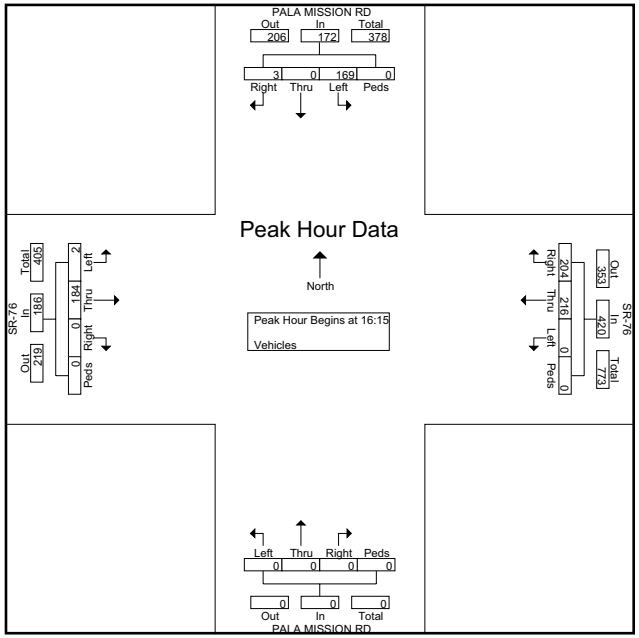

True Count

3401 First Ave #123
San Diego, CA 92103

File Name : 9095.04.LILAC RD.SR-76
Site Code : 00000000
Start Date : 10/22/2009
Page No : 1

Groups Printed- Vehicles

	LILAC RD Southbound				SR-76 Westbound				LILAC RD Northbound				SR-76 Eastbound				
Start Time	Left	Thru	Right	Peds	Left	Thru	Right	Peds	Left	Thru	Right	Peds	Left	Thru	Right	Peds	Int. Total
07:00	0	0	0	0	2	36	0	0	1	0	1	0	0	57	0	0	97
07:15	0	0	0	0	0	49	0	0	1	0	2	0	0	64	2	0	118
07:30	0	0	0	0	0	37	0	0	6	0	3	0	0	95	1	0	142
07:45	0	0	0	0	0	51	0	0	3	0	0	0	0	83	1	0	138
Total	0	0	0	0	2	173	0	0	11	0	6	0	0	299	4	0	495
08:00	0	0	0	0	0	44	0	0	2	0	0	0	0	55	3	0	104
08:15	0	0	0	0	2	49	0	0	3	0	1	0	0	73	2	0	130
08:30	0	0	0	0	4	32	0	0	0	0	2	0	0	60	2	0	100
08:45	0	0	0	0	1	47	0	0	3	0	0	0	0	82	2	0	135
Total	0	0	0	0	7	172	0	0	8	0	3	0	0	270	9	0	469
*** BREAK ***																	
16:00	0	0	0	0	2	94	0	0	1	0	0	0	0	81	2	0	180
16:15	0	0	0	0	4	98	0	0	1	0	2	0	0	86	2	0	193
16:30	0	0	0	0	1	103	0	0	2	0	2	0	0	105	0	0	213
16:45	0	0	0	0	0	110	0	0	2	0	3	0	0	82	1	0	198
Total	0	0	0	0	7	405	0	0	6	0	7	0	0	354	5	0	784
17:00	0	0	0	0	4	102	0	0	2	0	1	0	0	85	1	0	195
17:15	0	0	0	0	3	103	0	0	4	0	0	0	0	71	2	0	183
17:30	0	0	0	0	1	95	0	0	1	0	0	0	0	73	0	0	170
17:45	0	0	0	0	0	69	0	0	6	0	0	0	0	68	1	0	144
Total	0	0	0	0	8	369	0	0	13	0	1	0	0	297	4	0	692
Grand Total	0	0	0	0	24	1119	0	0	38	0	17	0	0	1220	22	0	2440
Apprch %	0	0	0	0	2.1	97.9	0	0	69.1	0	30.9	0	0	98.2	1.8	0	
Total %	0	0	0	0	1	45.9	0	0	1.6	0	0.7	0	0	50	0.9	0	

True Count

3401 First Ave #123
San Diego, CA 92103

File Name : 9095.04.LILAC RD.SR-76
Site Code : 00000000
Start Date : 10/22/2009
Page No : 2

	LILAC RD Southbound					SR-76 Westbound					LILAC RD Northbound					SR-76 Eastbound					
Start Time	Left	Thru	Right	Peds	App. Total	Left	Thru	Right	Peds	App. Total	Left	Thru	Right	Peds	App. Total	Left	Thru	Right	Peds	App. Total	Int. Total
Peak Hour Analysis From 07:00 to 11:45 - Peak 1 of 1																					
Peak Hour for Entire Intersection Begins at 07:30																					
07:30	0	0	0	0	0	0	37	0	0	37	**6**	0	**3**	0	**9**	0	**95**	1	0	**96**	**142**
07:45	0	0	0	0	0	0	**51**	0	0	**51**	3	0	0	0	3	0	83	1	0	84	138
08:00	0	0	0	0	0	0	44	0	0	44	2	0	0	0	2	0	55	**3**	0	58	104
08:15	0	0	0	0	0	**2**	49	0	0	51	3	0	1	0	4	0	73	2	0	75	130
Total Volume	0	0	0	0	0	2	181	0	0	183	14	0	4	0	18	0	306	7	0	313	514
% App. Total	0	0	0	0		1.1	98.9	0	0		77.8	0	22.2	0		0	97.8	2.2	0		
PHF	.000	.000	.000	.000	.000	.250	.887	.000	.000	.897	.583	.000	.333	.000	.500	.000	.805	.583	.000	.815	.905

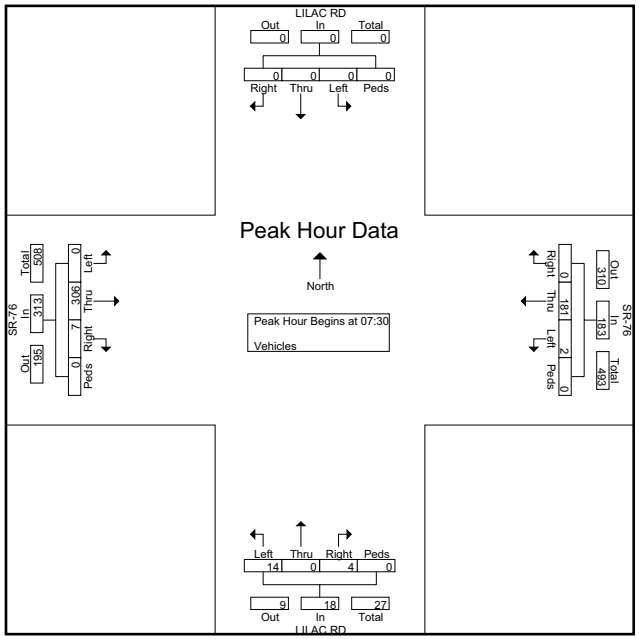

True Count

3401 First Ave #123
San Diego, CA 92103

File Name : 9095.04.LILAC RD.SR-76
Site Code : 00000000
Start Date : 10/22/2009
Page No : 3

	LILAC RD Southbound					SR-76 Westbound					LILAC RD Northbound					SR-76 Eastbound					
Start Time	Left	Thru	Right	Peds	App. Total	Left	Thru	Right	Peds	App. Total	Left	Thru	Right	Peds	App. Total	Left	Thru	Right	Peds	App. Total	Int. Total
Peak Hour Analysis From 12:00 to 17:45 - Peak 1 of 1																					
Peak Hour for Entire Intersection Begins at 16:15																					
16:15	0	0	0	0	0	**4**	98	0	0	102	1	0	2	0	3	0	86	**2**	0	88	193
16:30	0	0	0	0	0	1	103	0	0	104	**2**	0	2	0	4	0	**105**	0	0	**105**	**213**
16:45	0	0	0	0	0	0	**110**	0	0	**110**	2	0	**3**	0	**5**	0	82	1	0	83	198
17:00	0	0	0	0	0	4	102	0	0	106	2	0	1	0	3	0	85	1	0	86	195
Total Volume	0	0	0	0	0	9	413	0	0	422	7	0	8	0	15	0	358	4	0	362	799
% App. Total	0	0	0	0		2.1	97.9	0	0		46.7	0	53.3	0		0	98.9	1.1	0		
PHF	.000	.000	.000	.000	.000	.563	.939	.000	.000	.959	.875	.000	.667	.000	.750	.000	.852	.500	.000	.862	.938

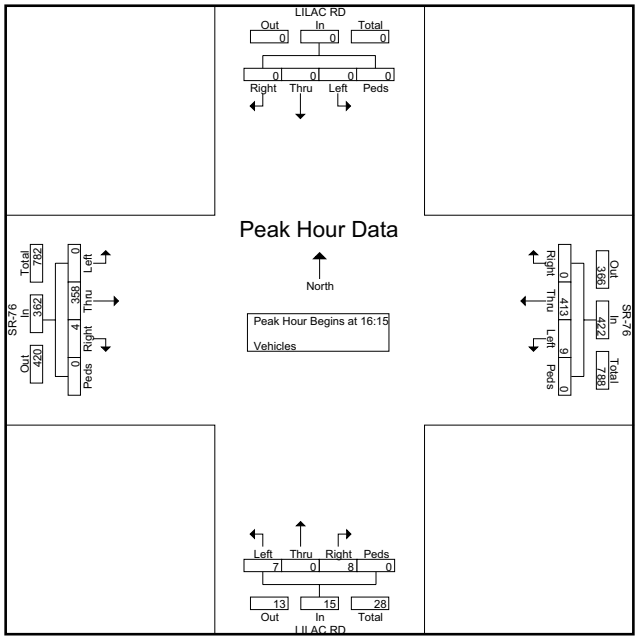

True Count

3401 First Ave #123
San Diego, CA 92103

File Name : 9002.05.COLE GRADE RD.SR 76 (PALA RD)
Site Code : 00000000
Start Date : 2/24/2009
Page No : 1

Groups Printed- Vehicles

	COLE GRADE RD Southbound				SR 76 (PALA RD) Westbound				COLE GRADE RD Northbound				SR 76 (PALA RD) Eastbound				
Start Time	Left	Thru	Right	Peds	Left	Thru	Right	Peds	Left	Thru	Right	Peds	Left	Thru	Right	Peds	Int. Total
07:00	0	1	0	0	15	22	0	0	18	0	4	0	0	31	20	0	111
07:15	0	0	0	0	15	31	0	0	24	1	8	0	0	31	17	0	127
07:30	0	0	0	0	13	47	1	0	50	0	17	0	0	47	16	0	191
07:45	0	0	0	0	18	31	0	0	28	0	20	1	0	69	21	0	188
Total	0	1	0	0	61	131	1	0	120	1	49	1	0	178	74	0	617
08:00	0	1	0	0	19	23	1	0	20	0	25	0	0	55	26	0	170
08:15	0	0	0	0	2	33	0	0	25	0	8	0	0	50	14	0	132
08:30	0	0	0	0	5	25	0	0	20	0	8	0	1	43	11	0	113
08:45	0	0	0	0	11	24	0	0	13	0	7	0	0	30	12	0	97
Total	0	1	0	0	37	105	1	0	78	0	48	0	1	178	63	0	512
*** BREAK ***																	
16:00	0	0	0	0	11	72	2	0	16	1	11	0	0	55	23	0	191
16:15	0	0	0	0	6	68	0	0	17	1	8	0	0	58	25	0	183
16:30	0	0	0	0	12	74	0	0	15	1	11	0	0	65	50	0	228
16:45	0	1	1	0	12	86	1	0	24	0	7	0	0	43	27	0	202
Total	0	1	1	0	41	300	3	0	72	3	37	0	0	221	125	0	804
17:00	0	1	0	0	8	65	0	0	20	0	10	0	0	43	16	0	163
17:15	0	0	0	0	8	69	0	0	12	1	6	0	0	45	22	2	165
17:30	0	0	0	0	3	54	0	0	16	0	4	0	1	37	13	0	128
17:45	0	0	0	0	2	48	0	0	23	0	8	0	0	46	22	0	149
Total	0	1	0	0	21	236	0	0	71	1	28	0	1	171	73	2	605
Grand Total	0	4	1	0	160	772	5	0	341	5	162	1	2	748	335	2	2538
Apprch %	0	80	20	0	17.1	82.4	0.5	0	67	1	31.8	0.2	0.2	68.8	30.8	0.2	
Total %	0	0.2	0	0	6.3	30.4	0.2	0	13.4	0.2	6.4	0	0.1	29.5	13.2	0.1	

True Count

3401 First Ave #123
San Diego, CA 92103

File Name : 9002.05.COLE GRADE RD.SR 76 (PALA RD)
Site Code : 00000000
Start Date : 2/24/2009
Page No : 2

	COLE GRADE RD Southbound					SR 76 (PALA RD) Westbound					COLE GRADE RD Northbound					SR 76 (PALA RD) Eastbound					
Start Time	Left	Thru	Right	Peds	App. Total	Left	Thru	Right	Peds	App. Total	Left	Thru	Right	Peds	App. Total	Left	Thru	Right	Peds	App. Total	Int. Total
Peak Hour Analysis From 07:00 to 11:45 - Peak 1 of 1																					
Peak Hour for Entire Intersection Begins at 07:30																					
07:30	0	0	0	0	0	13	**47**	**1**	0	**61**	**50**	0	17	0	**67**	0	47	16	0	63	**191**
07:45	0	0	0	0	0	18	31	0	0	49	28	0	20	**1**	49	0	**69**	21	0	**90**	188
08:00	0	**1**	0	0	**1**	**19**	23	1	0	43	20	0	**25**	0	45	0	55	**26**	0	81	170
08:15	0	0	0	0	0	2	33	0	0	35	25	0	8	0	33	0	50	14	0	64	132
Total Volume	0	1	0	0	1	52	134	2	0	188	123	0	70	1	194	0	221	77	0	298	681
% App. Total	0	100	0	0		27.7	71.3	1.1	0		63.4	0	36.1	0.5		0	74.2	25.8	0		
PHF	.000	.250	.000	.000	.250	.684	.713	.500	.000	.770	.615	.000	.700	.250	.724	.000	.801	.740	.000	.828	.891

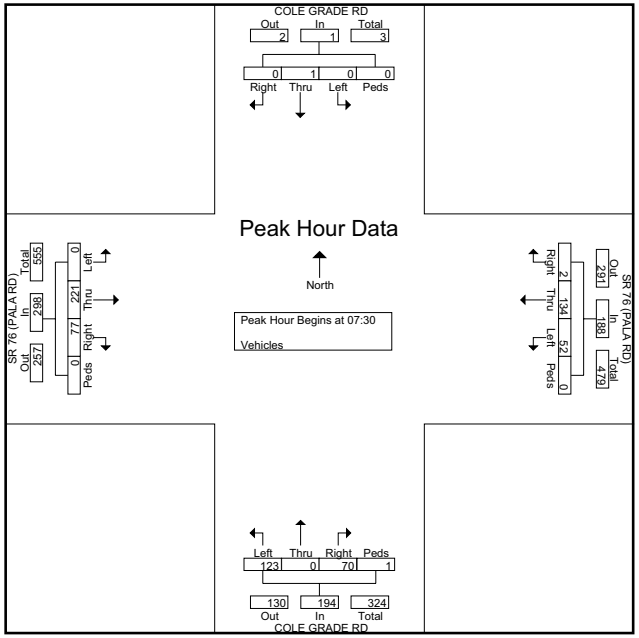

True Count

3401 First Ave #123
San Diego, CA 92103

File Name : 9002.05.COLE GRADE RD.SR 76 (PALA RD)
Site Code : 00000000
Start Date : 2/24/2009
Page No : 3

	COLE GRADE RD Southbound					SR 76 (PALA RD) Westbound					COLE GRADE RD Northbound					SR 76 (PALA RD) Eastbound					
Start Time	Left	Thru	Right	Peds	App. Total	Left	Thru	Right	Peds	App. Total	Left	Thru	Right	Peds	App. Total	Left	Thru	Right	Peds	App. Total	Int. Total
Peak Hour Analysis From 12:00 to 17:45 - Peak 1 of 1																					
Peak Hour for Entire Intersection Begins at 16:00																					
16:00	0	0	0	0	0	11	72	**2**	0	85	16	**1**	**11**	0	28	0	55	23	0	78	191
16:15	0	0	0	0	0	6	68	0	0	74	17	1	8	0	26	0	58	25	0	83	183
16:30	0	0	0	0	0	**12**	74	0	0	86	15	1	11	0	27	0	**65**	**50**	0	**115**	**228**
16:45	0	**1**	**1**	0	**2**	12	**86**	1	0	**99**	**24**	0	7	0	**31**	0	43	27	0	70	202
Total Volume	0	1	1	0	2	41	300	3	0	344	72	3	37	0	112	0	221	125	0	346	804
% App. Total	0	50	50	0		11.9	87.2	0.9	0		64.3	2.7	33	0		0	63.9	36.1	0		
PHF	.000	.250	.250	.000	.250	.854	.872	.375	.000	.869	.750	.750	.841	.000	.903	.000	.850	.625	.000	.752	.882

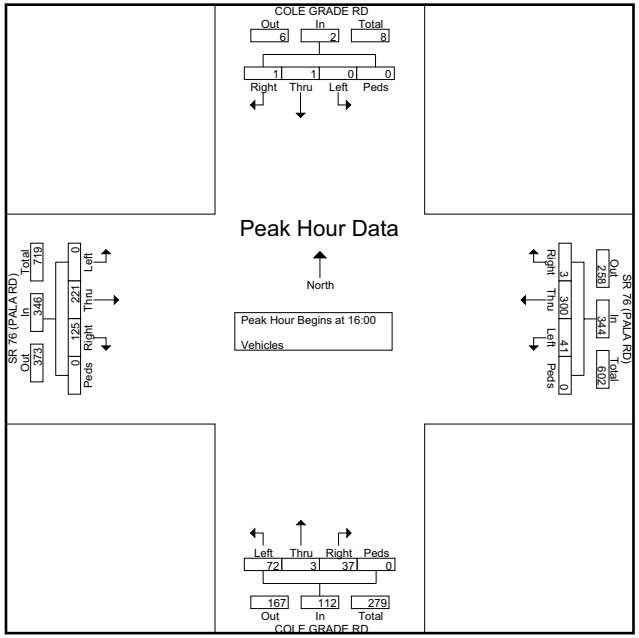

True Count

3401 First Ave #123
San Diego, CA 92103

File Name : 9002.04.ADAMS DR.SR 76 (PALA RD)
Site Code : 00000000
Start Date : 2/24/2009
Page No : 1

Groups Printed- Vehicles

	ADAMS DR Southbound				SR 76 (PALA RD) Westbound				ADAMS DR Northbound				SR 76 (PALA RD) Eastbound				
Start Time	Left	Thru	Right	Peds	Left	Thru	Right	Peds	Left	Thru	Right	Peds	Left	Thru	Right	Peds	Int. Total
07:00	2	0	1	0	0	37	0	0	0	0	0	0	0	46	0	1	87
07:15	5	0	2	0	0	43	0	0	0	0	0	0	0	56	0	0	106
07:30	3	0	0	0	0	47	3	0	0	0	0	0	0	70	0	0	123
07:45	2	0	1	0	0	52	1	0	0	0	0	0	0	84	0	0	140
Total	12	0	4	0	0	179	4	0	0	0	0	0	0	256	0	1	456
08:00	0	0	1	0	0	43	0	0	0	0	0	0	0	83	0	1	128
08:15	0	0	0	0	0	39	0	0	0	0	0	0	1	69	0	0	109
08:30	0	0	4	0	0	59	0	0	0	0	0	0	0	75	0	0	138
08:45	5	0	2	0	0	28	2	0	0	0	0	0	3	57	0	0	97
Total	5	0	7	0	0	169	2	0	0	0	0	0	4	284	0	1	472
*** BREAK ***																	
16:00	2	0	2	0	0	84	5	0	0	0	0	0	0	80	0	1	174
16:15	2	0	1	0	0	71	3	1	0	0	0	0	0	75	0	0	153
16:30	2	0	2	0	0	93	3	0	0	0	0	0	1	74	0	0	175
16:45	3	0	1	1	0	104	3	0	0	0	0	0	0	66	0	0	178
Total	9	0	6	1	0	352	14	1	0	0	0	0	1	295	0	1	680
17:00	3	0	1	1	0	96	2	0	0	0	0	0	2	65	0	1	171
17:15	0	0	0	0	0	104	3	0	0	0	0	0	2	73	0	0	182
17:30	0	0	1	0	0	109	2	1	0	0	0	0	0	73	0	0	186
17:45	2	0	1	0	0	127	2	0	0	0	0	0	1	51	0	0	184
Total	5	0	3	1	0	436	9	1	0	0	0	0	5	262	0	1	723
Grand Total	31	0	20	2	0	1136	29	2	0	0	0	0	10	1097	0	4	2331
Apprch %	58.5	0	37.7	3.8	0	97.3	2.5	0.2	0	0	0	0	0.9	98.7	0	0.4	
Total %	1.3	0	0.9	0.1	0	48.7	1.2	0.1	0	0	0	0	0.4	47.1	0	0.2	

True Count

3401 First Ave #123
San Diego, CA 92103

File Name : 9002.04.ADAMS DR.SR 76 (PALA RD)
Site Code : 00000000
Start Date : 2/24/2009
Page No : 2

	ADAMS DR Southbound					SR 76 (PALA RD) Westbound					ADAMS DR Northbound					SR 76 (PALA RD) Eastbound					
Start Time	Left	Thru	Right	Peds	App. Total	Left	Thru	Right	Peds	App. Total	Left	Thru	Right	Peds	App. Total	Left	Thru	Right	Peds	App. Total	Int. Total
Peak Hour Analysis From 07:00 to 11:45 - Peak 1 of 1																					
Peak Hour for Entire Intersection Begins at 07:45																					
07:45	**2**	0	1	0	3	0	52	**1**	0	53	0	0	0	0	0	0	**84**	0	0	**84**	**140**
08:00	0	0	1	0	1	0	43	0	0	43	0	0	0	0	0	0	83	0	**1**	84	128
08:15	0	0	0	0	0	0	39	0	0	39	0	0	0	0	0	**1**	69	0	0	70	109
08:30	0	0	**4**	0	**4**	0	**59**	0	0	**59**	0	0	0	0	0	0	75	0	0	75	138
Total Volume	2	0	6	0	8	0	193	1	0	194	0	0	0	0	0	1	311	0	1	313	515
% App. Total	25	0	75	0		0	99.5	0.5	0		0	0	0	0		0.3	99.4	0	0.3		
PHF	.250	.000	.375	.000	.500	.000	.818	.250	.000	.822	.000	.000	.000	.000	.000	.250	.926	.000	.250	.932	.920

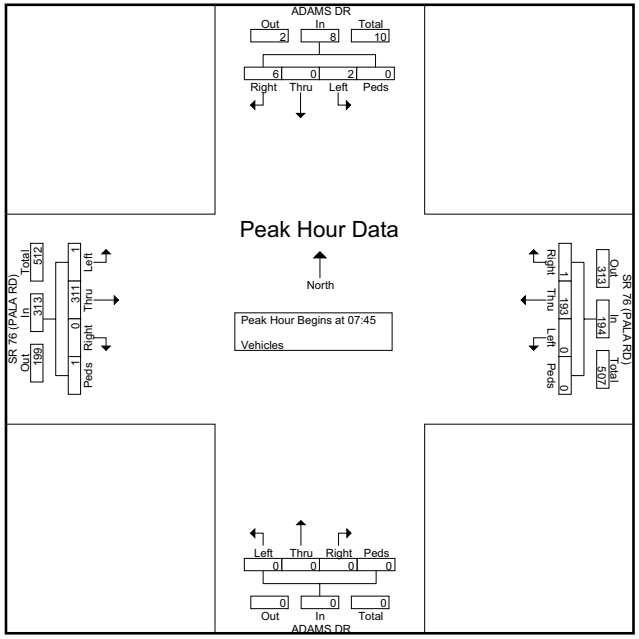

True Count

3401 First Ave #123
San Diego, CA 92103

File Name : 9002.04.ADAMS DR.SR 76 (PALA RD)
Site Code : 00000000
Start Date : 2/24/2009
Page No : 3

	ADAMS DR Southbound					SR 76 (PALA RD) Westbound					ADAMS DR Northbound					SR 76 (PALA RD) Eastbound					
Start Time	Left	Thru	Right	Peds	App. Total	Left	Thru	Right	Peds	App. Total	Left	Thru	Right	Peds	App. Total	Left	Thru	Right	Peds	App. Total	Int. Total
Peak Hour Analysis From 12:00 to 17:45 - Peak 1 of 1																					
Peak Hour for Entire Intersection Begins at 17:00																					
17:00	**3**	0	**1**	**1**	**5**	0	96	2	0	98	0	0	0	0	0	**2**	65	0	**1**	68	171
17:15	0	0	0	0	0	0	104	**3**	0	107	0	0	0	0	0	2	**73**	0	0	**75**	182
17:30	0	0	1	0	1	0	109	2	**1**	112	0	0	0	0	0	0	73	0	0	73	**186**
17:45	2	0	1	0	3	0	**127**	2	0	**129**	0	0	0	0	0	1	51	0	0	52	184
Total Volume	5	0	3	1	9	0	436	9	1	446	0	0	0	0	0	5	262	0	1	268	723
% App. Total	55.6	0	33.3	11.1		0	97.8	2	0.2		0	0	0	0		1.9	97.8	0	0.4		
PHF	.417	.000	.750	.250	.450	.000	.858	.750	.250	.864	.000	.000	.000	.000	.000	.625	.897	.000	.250	.893	.972

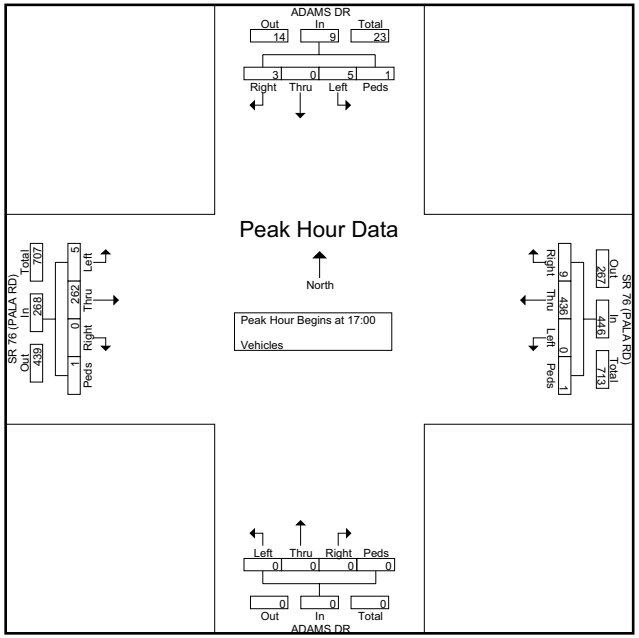

APPENDIX D

PEAK HOUR INTERSECTION ANALYSIS WORKSHEETS EXISTING CONDITIONS

Scenario Report

Scenario:	Ex AM
Command:	Default Command
Volume:	Ex AM
Geometry:	EX
Impact Fee:	Default Impact Fee
Trip Generation:	None
Trip Distribution:	None
Paths:	Default Path
Routes:	Default Route
Configuration:	Default Configuration

Impact Analysis Report
Level Of Service

Intersection	Base LOS	Base Del/ Veh	Base V/ C	Future LOS	Future Del/ Veh	Future V/ C	Change in
#201 SR76 & Vista Way	F	84.1	1.059	F	84.1	1.059	+ 0.000 D/V
#202 Mission Ave & River Rd	C	21.1	0.841	C	21.1	0.841	+ 0.000 D/V
#203 Mission Rd & Olive Hill Rd	D	36.7	0.881	D	36.7	0.881	+ 0.000 D/V
#204 SR76 & Mission Rd	C	28.8	0.725	C	28.8	0.725	+ 0.000 D/V
#205 SR76 & Gird Rd	B	13.4	0.623	B	13.4	0.623	+ 0.000 D/V
#206 SR76 & Old Hwy 395	C	31.1	0.576	C	31.1	0.576	+ 0.000 D/V
#207 SR76 & I-15 SB Ramps	C	31.1	0.820	C	31.1	0.820	+ 0.000 D/V
#208 SR76 & I-15 NB Ramps	C	23.6	0.488	C	23.6	0.488	+ 0.000 D/V
#209 SR76 & Pankey Rd	B	12.3	0.048	B	12.3	0.048	+ 0.000 D/V
#210 SR76 & Horse Ranch Creek Rd	A	0.0	0.000	A	0.0	0.000	+ 0.000 D/V
#211 SR76 & Rice Cyn Rd	B	11.2	0.033	B	11.2	0.033	+ 0.000 D/V
#212 SR76 & Couser Cyn Rd	B	12.3	0.057	B	12.3	0.057	+ 0.000 D/V
#214 SR76 & C. Drwy	A	0.5	0.157	A	0.5	0.157	+ 0.000 D/V
#216 SR76 & W. Pala Mission Rd	C	26.4	0.232	C	26.4	0.232	+ 0.000 D/V
#217 Pala Mission Rd & Pala Temecul	A	9.7	0.436	A	9.7	0.436	+ 0.000 V/C
#218 SR76 & Brittain Rd	A	9.1	0.004	A	9.1	0.004	+ 0.000 D/V
#219 SR76 & E. Pala Mission Rd	B	12.5	0.230	B	12.5	0.230	+ 0.000 D/V
#220 SR76 & Lilac Rd	B	11.8	0.029	B	11.8	0.029	+ 0.000 D/V
#221 SR76 & Adams Dr	B	10.1	0.008	B	10.1	0.008	+ 0.000 D/V
#222 SR76 & Cole Grade Rd	C	17.0	0.305	C	17.0	0.305	+ 0.000 D/V

Level Of Service Computation Report
2000 HCM Operations Method (Future Volume Alternative)

Intersection #201 SR76 & Vista Way

Cycle (sec): 135 Critical Vol./Cap.(X): 1.059
Loss Time (sec): 16 Average Delay (sec/veh): 84.1
Optimal Cycle: OPTIMIZED Level Of Service: F

Street Name:	SR76						Vista Way					
Approach:	North Bound			South Bound			East Bound			West Bound		
Movement:	L - T - R			L - T - R			L - T - R			L - T - R		
Control:	Protected			Protected			Protected			Protected		
Rights:	Include			Include			Include			Include		
Min. Green:	5	5	5	5	5	5	5	5	5	5	5	5
Y+R:	4.0	4.0	4.0	4.0	4.0	4.0	4.0	4.0	4.0	4.0	4.0	4.0
Lanes:	1	0	1 1	0	2	0 0 1	0	0	0 1!	0 0	0 1	0 0 1
Volume Module:												
Base Vol:	36	543	292	304	841	10	7	162	215	284	26	293
Growth Adj:	1.00	1.00	1.00	1.00	1.00	1.00	1.00	1.00	1.00	1.00	1.00	1.00
Initial Bse:	36	543	292	304	841	10	7	162	215	284	26	293
Added Vol:	0	0	0	0	0	0	0	0	0	0	0	0
PasserByVol:	0	0	0	0	0	0	0	0	0	0	0	0
Initial Fut:	36	543	292	304	841	10	7	162	215	284	26	293
User Adj:	1.00	1.00	1.00	1.00	1.00	1.00	1.00	1.00	1.00	1.00	1.00	1.00
PHF Adj:	0.95	0.95	0.95	0.95	0.95	0.95	0.95	0.95	0.95	0.95	0.95	0.95
PHF Volume:	38	572	307	320	885	11	7	171	226	299	27	308
Reduct Vol:	0	0	0	0	0	0	0	0	0	0	0	0
Reduced Vol:	38	572	307	320	885	11	7	171	226	299	27	308
PCE Adj:	1.00	1.00	1.00	1.00	1.00	1.00	1.00	1.00	1.00	1.00	1.00	1.00
MLF Adj:	1.00	1.00	1.00	1.00	1.00	1.00	1.00	1.00	1.00	1.00	1.00	1.00
FinalVolume:	38	572	307	320	885	11	7	171	226	299	27	308
Saturation Flow Module:												
Sat/Lane:	1900	1900	1900	1900	1900	1900	1900	1900	1900	1900	1900	1900
Adjustment:	0.93	0.88	0.88	0.90	0.98	0.98	0.90	0.90	0.90	0.94	0.94	0.83
Lanes:	1.00	1.30	0.70	2.00	0.99	0.01	0.02	0.42	0.56	0.92	0.08	1.00
Final Sat.:	1769	2181	1173	3432	1836	22	31	725	962	1631	149	1583
Capacity Analysis Module:												
Vol/Sat:	0.02	0.26	0.26	0.09	0.48	0.48	0.24	0.24	0.24	0.18	0.18	0.19
Crit Moves:	****				****		****					****
Green/Cycle:	0.04	0.36	0.36	0.13	0.45	0.45	0.22	0.22	0.22	0.17	0.18	0.18
Volume/Cap:	0.58	0.74	0.74	0.74	1.08	1.08	1.08	1.05	1.05	1.05	1.02	1.08
Uniform Del:	64.0	37.9	37.9	56.8	37.4	37.4	52.8	52.4	52.4	55.7	55.3	55.3
IncremntDel:	12.2	2.4	2.4	6.4	55.2	55.2	69.6	59.9	59.9	65.1	54.4	76.2
InitQueuDel:	0.0	0.0	0.0	0.0	0.0	0.0	0.0	0.0	0.0	0.0	0.0	0.0
Delay Adj:	1.00	1.00	1.00	1.00	1.00	1.00	1.00	1.00	1.00	1.00	1.00	1.00
Delay/Veh:	76.2	40.3	40.3	63.2	92.5	92.5	122.4	112	112.3	120.8	110	131.6
User DelAdj:	1.00	1.00	1.00	1.00	1.00	1.00	1.00	1.00	1.00	1.00	1.00	1.00
AdjDel/Veh:	76.2	40.3	40.3	63.2	92.5	92.5	122.4	112	112.3	120.8	110	131.6
LOS by Move:	E	D	D	E	F	F	F	F	F	F	F	F
HCM2k95thQ:	5	30	30	15	76	76	40	39	39	33	32	33

Level Of Service Computation Report
2000 HCM Operations Method (Future Volume Alternative)

Intersection #202 Mission Ave & River Rd

Cycle (sec): 120 Critical Vol./Cap.(X): 0.841
Loss Time (sec): 16 Average Delay (sec/veh): 21.1
Optimal Cycle: OPTIMIZED Level Of Service: C

Street Name:	SR76						River Rd					
Approach:	North Bound			South Bound			East Bound			West Bound		
Movement:	L - T - R			L - T - R			L - T - R			L - T - R		
Control:	Protected			Protected			Protected			Protected		
Rights:	Include			Include			Include			Include		
Min. Green:	5	5	5	5	5	5	5	5	5	5	5	5
Y+R:	4.0	4.0	4.0	4.0	4.0	4.0	4.0	4.0	4.0	4.0	4.0	4.0
Lanes:	1	0	1 0	0	0	0 0 1	0	0	0 1	0 0	0 0	0 0
Volume Module:												
Base Vol:	78	799	0	0	953	139	91	0	57	0	0	0
Growth Adj:	1.00	1.00	1.00	1.00	1.00	1.00	1.00	1.00	1.00	1.00	1.00	1.00
Initial Bse:	78	799	0	0	953	139	91	0	57	0	0	0
Added Vol:	0	0	0	0	0	0	0	0	0	0	0	0
PasserByVol:	0	0	0	0	0	0	0	0	0	0	0	0
Initial Fut:	78	799	0	0	953	139	91	0	57	0	0	0
User Adj:	1.00	1.00	1.00	1.00	1.00	1.00	1.00	1.00	1.00	1.00	1.00	1.00
PHF Adj:	0.95	0.95	0.95	0.95	0.95	0.95	0.95	0.95	0.95	0.95	0.95	0.95
PHF Volume:	82	841	0	0	1003	146	96	0	60	0	0	0
Reduct Vol:	0	0	0	0	0	0	0	0	0	0	0	0
Reduced Vol:	82	841	0	0	1003	146	96	0	60	0	0	0
PCE Adj:	1.00	1.00	1.00	1.00	1.00	1.00	1.00	1.00	1.00	1.00	1.00	1.00
MLF Adj:	1.00	1.00	1.00	1.00	1.00	1.00	1.00	1.00	1.00	1.00	1.00	1.00
FinalVolume:	82	841	0	0	1003	146	96	0	60	0	0	0
Saturation Flow Module:												
Sat/Lane:	1900	1900	1900	1900	1900	1900	1900	1900	1900	1900	1900	1900
Adjustment:	0.93	0.98	1.00	1.00	0.96	0.96	0.93	1.00	0.83	1.00	1.00	1.00
Lanes:	1.00	1.00	0.00	0.00	0.87	0.13	1.00	0.00	1.00	0.00	0.00	0.00
Final Sat.:	1769	1862	0	0	1597	233	1769	0	1583	0	0	0
Capacity Analysis Module:												
Vol/Sat:	0.05	0.45	0.00	0.00	0.63	0.63	0.05	0.00	0.04	0.00	0.00	0.00
Crit Moves:	****				****		****					
Green/Cycle:	0.06	0.73	0.00	0.00	0.75	0.75	0.06	0.00	0.05	0.00	0.00	0.00
Volume/Cap:	0.84	0.61	0.00	0.00	0.84	0.84	0.84	0.00	0.71	0.00	0.00	0.00
Uniform Del:	56.2	7.7	0.0	0.0	10.3	10.3	55.5	0.0	55.9	0.0	0.0	0.0
IncremntDel:	44.6	0.8	0.0	0.0	4.8	4.8	39.9	0.0	25.2	0.0	0.0	0.0
InitQueuDel:	0.0	0.0	0.0	0.0	0.0	0.0	0.0	0.0	0.0	0.0	0.0	0.0
Delay Adj:	1.00	1.00	0.00	0.00	1.00	1.00	1.00	0.00	1.00	0.00	0.00	0.00
Delay/Veh:	100.8	8.6	0.0	0.0	15.2	15.2	95.4	0.0	81.1	0.0	0.0	0.0
User DelAdj:	1.00	1.00	1.00	1.00	1.00	1.00	1.00	1.00	1.00	1.00	1.00	1.00
AdjDel/Veh:	100.8	8.6	0.0	0.0	15.2	15.2	95.4	0.0	81.1	0.0	0.0	0.0
LOS by Move:	F	A	A	A	B	B	F	A	F	A	A	A
HCM2k95thQ:	10	27	0	0	49	49	11	0	7	0	0	0

Level Of Service Computation Report
2000 HCM Operations Method (Future Volume Alternative)

Intersection #203 Mission Rd & Olive Hill Rd

Cycle (sec): 90 Critical Vol./Cap.(X): 0.881
Loss Time (sec): 16 Average Delay (sec/veh): 36.7
Optimal Cycle: OPTIMIZED Level Of Service: D

Street Name:	SR76									Olive Hill Rd								
Approach:	North Bound				South Bound				East Bound				West Bound					
Movement:	L	-	T	-	R	L	-	T	-	R	L	-	T	-	R	L	-	T	-	R
Control:	Protected					Protected					Protected					Protected				
Rights:	Include					Include					Include					Include				
Min. Green:	5	5	5			5	5	5			5	5	5			5	5	5		
Y+R:	4.0	4.0	4.0			4.0	4.0	4.0			4.0	4.0	4.0			4.0	4.0	4.0		
Lanes:	1	0	1	1	0	1	0	2	0	1	1	0	1	0	1	0	1	0	0	1
Volume Module:																				
Base Vol:	62	687	84			457	1004	47			87	174	75			47	81	252		
Growth Adj:	1.00	1.00	1.00			1.00	1.00	1.00			1.00	1.00	1.00			1.00	1.00	1.00		
Initial Bse:	62	687	84			457	1004	47			87	174	75			47	81	252		
Added Vol:	0	0	0			0	0	0			0	0	0			0	0	0		
PasserByVol:	0	0	0			0	0	0			0	0	0			0	0	0		
Initial Fut:	62	687	84			457	1004	47			87	174	75			47	81	252		
User Adj:	1.00	1.00	1.00			1.00	1.00	1.00			1.00	1.00	1.00			1.00	1.00	1.00		
PHF Adj:	0.95	0.95	0.95			0.95	0.95	0.95			0.95	0.95	0.95			0.95	0.95	0.95		
PHF Volume:	65	723	88			481	1057	49			92	183	79			49	85	265		
Reduct Vol:	0	0	0			0	0	0			0	0	0			0	0	0		
Reduced Vol:	65	723	88			481	1057	49			92	183	79			49	85	265		
PCE Adj:	1.00	1.00	1.00			1.00	1.00	1.00			1.00	1.00	1.00			1.00	1.00	1.00		
MLF Adj:	1.00	1.00	1.00			1.00	1.00	1.00			1.00	1.00	1.00			1.00	1.00	1.00		
FinalVolume:	65	723	88			481	1057	49			92	183	79			49	85	265		
Saturation Flow Module:																				
Sat/Lane:	1900	1900	1900			1900	1900	1900			1900	1900	1900			1900	1900	1900		
Adjustment:	0.93	0.92	0.92			0.93	0.93	0.83			0.93	0.98	0.83			0.96	0.96	0.83		
Lanes:	1.00	1.78	0.22			1.00	2.00	1.00			1.00	1.00	1.00			0.37	0.63	1.00		
Final Sat.:	1769	3102	379			1769	3538	1583			1769	1862	1583			671	1157	1583		
Capacity Analysis Module:																				
Vol/Sat:	0.04	0.23	0.23			0.27	0.30	0.03			0.05	0.10	0.05			0.07	0.07	0.17		
Crit Moves:		****				****					****							****		
Green/Cycle:	0.09	0.26	0.26			0.31	0.48	0.48			0.06	0.14	0.14			0.11	0.19	0.19		
Volume/Cap:	0.41	0.88	0.88			0.88	0.62	0.06			0.88	0.69	0.35			0.69	0.39	0.88		
Uniform Del:	38.7	31.7	31.7			29.5	17.1	12.4			42.0	36.7	34.8			38.8	31.9	35.4		
IncremntDel:	1.7	9.9	9.9			15.4	0.7	0.0			52.5	7.6	0.9			10.1	0.7	24.6		
InitQueuDel:	0.0	0.0	0.0			0.0	0.0	0.0			0.0	0.0	0.0			0.0	0.0	0.0		
Delay Adj:	1.00	1.00	1.00			1.00	1.00	1.00			1.00	1.00	1.00			1.00	1.00	1.00		
Delay/Veh:	40.4	41.6	41.6			44.9	17.8	12.4			94.5	44.3	35.8			48.9	32.6	60.0		
User DelAdj:	1.00	1.00	1.00			1.00	1.00	1.00			1.00	1.00	1.00			1.00	1.00	1.00		
AdjDel/Veh:	40.4	41.6	41.6			44.9	17.8	12.4			94.5	44.3	35.8			48.9	32.6	60.0		
LOS by Move:	D	D	D			D	B	B			F	D	D			D	C	E		
HCM2k95thQ:	4	26	26			28	21	2			10	12	5			10	7	19		

Level Of Service Computation Report
2000 HCM Operations Method (Future Volume Alternative)

Intersection #204 SR76 & Mission Rd

Cycle (sec): 90 Critical Vol./Cap.(X): 0.725
Loss Time (sec): 12 Average Delay (sec/veh): 28.8
Optimal Cycle: OPTIMIZED Level Of Service: C

Street Name:	Mission Rd									SR76								
Approach:	North Bound				South Bound				East Bound				West Bound					
Movement:	L	-	T	-	R	L	-	T	-	R	L	-	T	-	R	L	-	T	-	R
Control:	Split Phase					Split Phase					Protected					Protected				
Rights:	Include					Include					Include					Include				
Min. Green:	5	5	5			5	5	5			5	5	5			5	5	5		
Y+R:	4.0	4.0	4.0			4.0	4.0	4.0			4.0	4.0	4.0			4.0	4.0	4.0		
Lanes:	0	0	0	0	0	2	0	0	0	2	2	0	1	0	0	0	0	2	0	1
Volume Module:																				
Base Vol:	0	0	0			104	0	678			489	511	0			0	748	83		
Growth Adj:	1.00	1.00	1.00			1.00	1.00	1.00			1.00	1.00	1.00			1.00	1.00	1.00		
Initial Bse:	0	0	0			104	0	678			489	511	0			0	748	83		
Added Vol:	0	0	0			0	0	0			0	0	0			0	0	0		
PasserByVol:	0	0	0			0	0	0			0	0	0			0	0	0		
Initial Fut:	0	0	0			104	0	678			489	511	0			0	748	83		
User Adj:	1.00	1.00	1.00			1.00	1.00	1.00			1.00	1.00	1.00			1.00	1.00	1.00		
PHF Adj:	0.95	0.95	0.95			0.95	0.95	0.95			0.95	0.95	0.95			0.95	0.95	0.95		
PHF Volume:	0	0	0			109	0	714			515	538	0			0	787	87		
Reduct Vol:	0	0	0			0	0	0			0	0	0			0	0	0		
Reduced Vol:	0	0	0			109	0	714			515	538	0			0	787	87		
PCE Adj:	1.00	1.00	1.00			1.00	1.00	1.00			1.00	1.00	1.00			1.00	1.00	1.00		
MLF Adj:	1.00	1.00	1.00			1.00	1.00	1.00			1.00	1.00	1.00			1.00	1.00	1.00		
FinalVolume:	0	0	0			109	0	714			515	538	0			0	787	87		
Saturation Flow Module:																				
Sat/Lane:	1900	1900	1900			1900	1900	1900			1900	1900	1900			1900	1900	1900		
Adjustment:	1.00	1.00	1.00			0.90	1.00	0.73			0.90	0.98	1.00			1.00	0.93	0.83		
Lanes:	0.00	0.00	0.00			2.00	0.00	2.00			2.00	1.00	0.00			0.00	2.00	1.00		
Final Sat.:	0	0	0			3432	0	2786			3432	1862	0			0	3538	1583		
Capacity Analysis Module:																				
Vol/Sat:	0.00	0.00	0.00			0.03	0.00	0.26			0.15	0.29	0.00			0.00	0.22	0.06		
Crit Moves:								****			****						****			
Green/Cycle:	0.00	0.00	0.00			0.35	0.00	0.35			0.21	0.43	0.00			0.00	0.31	0.31		
Volume/Cap:	0.00	0.00	0.00			0.09	0.00	0.73			0.73	0.67	0.00			0.00	0.73	0.18		
Uniform Del:	0.0	0.0	0.0			19.4	0.0	25.3			33.3	20.5	0.0			0.0	27.8	22.9		
IncremntDel:	0.0	0.0	0.0			0.0	0.0	2.7			3.7	2.2	0.0			0.0	2.5	0.2		
InitQueuDel:	0.0	0.0	0.0			0.0	0.0	0.0			0.0	0.0	0.0			0.0	0.0	0.0		
Delay Adj:	0.00	0.00	0.00			1.00	0.00	1.00			1.00	1.00	0.00			0.00	1.00	1.00		
Delay/Veh:	0.0	0.0	0.0			19.5	0.0	28.0			37.1	22.7	0.0			0.0	30.3	23.1		
User DelAdj:	1.00	1.00	1.00			1.00	1.00	1.00			1.00	1.00	1.00			1.00	1.00	1.00		
AdjDel/Veh:	0.0	0.0	0.0			19.5	0.0	28.0			37.1	22.7	0.0			0.0	30.3	23.1		
LOS by Move:	A	A	A			B	A	C			D	C	A			A	C	C		
HCM2k95thQ:	0	0	0			2	0	20			16	23	0			0	21	4		

Level Of Service Computation Report
2000 HCM Operations Method (Future Volume Alternative)

Intersection #205 SR76 & Gird Rd

Cycle (sec): 90 Critical Vol./Cap.(X): 0.623
Loss Time (sec): 12 Average Delay (sec/veh): 13.4
Optimal Cycle: OPTIMIZED Level Of Service: B

Street Name:	Gird Rd						SR76					
Approach:	North Bound			South Bound			East Bound			West Bound		
Movement:	L	T	R	L	T	R	L	T	R	L	T	R
Control:	Split Phase			Split Phase			Protected			Protected		
Rights:	Include			Include			Include			Include		
Min. Green:	5	5	5	5	5	5	5	5	5	5	5	5
Y+R:	4.0	4.0	4.0	4.0	4.0	4.0	4.0	4.0	4.0	4.0	4.0	4.0
Lanes:	0 0	0	0 0	1 0	0	0 1	1 0	1	0 0	0 0	1	0 1
Volume Module: PM Peak												
Base Vol:	0	0	0	57	0	111	53	599	0	0	768	40
Growth Adj:	1.00	1.00	1.00	1.00	1.00	1.00	1.00	1.00	1.00	1.00	1.00	1.00
Initial Bse:	0	0	0	57	0	111	53	599	0	0	768	40
Added Vol:	0	0	0	0	0	0	0	0	0	0	0	0
PasserByVol:	0	0	0	0	0	0	0	0	0	0	0	0
Initial Fut:	0	0	0	57	0	111	53	599	0	0	768	40
User Adj:	1.00	1.00	1.00	1.00	1.00	1.00	1.00	1.00	1.00	1.00	1.00	1.00
PHF Adj:	0.95	0.95	0.95	0.95	0.95	0.95	0.95	0.95	0.95	0.95	0.95	0.95
PHF Volume:	0	0	0	60	0	117	56	631	0	0	808	42
Reduct Vol:	0	0	0	0	0	0	0	0	0	0	0	0
Reduced Vol:	0	0	0	60	0	117	56	631	0	0	808	42
PCE Adj:	1.00	1.00	1.00	1.00	1.00	1.00	1.00	1.00	1.00	1.00	1.00	1.00
MLF Adj:	1.00	1.00	1.00	1.00	1.00	1.00	1.00	1.00	1.00	1.00	1.00	1.00
FinalVolume:	0	0	0	60	0	117	56	631	0	0	808	42
Saturation Flow Module:												
Sat/Lane:	1900	1900	1900	1900	1900	1900	1900	1900	1900	1900	1900	1900
Adjustment:	1.00	1.00	1.00	0.93	1.00	0.83	0.93	0.98	1.00	1.00	0.98	0.83
Lanes:	0.00	0.00	0.00	1.00	0.00	1.00	1.00	1.00	0.00	0.00	1.00	1.00
Final Sat.:	0	0	0	1769	0	1583	1769	1862	0	0	1862	1583
Capacity Analysis Module:												
Vol/Sat:	0.00	0.00	0.00	0.03	0.00	0.07	0.03	0.34	0.00	0.00	0.43	0.03
Crit Moves:						****	****				****	
Green/Cycle:	0.00	0.00	0.00	0.12	0.00	0.12	0.06	0.64	0.00	0.00	0.69	0.69
Volume/Cap:	0.00	0.00	0.00	0.29	0.00	0.63	0.57	0.53	0.00	0.00	0.63	0.04
Uniform Del:	0.0	0.0	0.0	36.2	0.0	37.8	41.4	8.7	0.0	0.0	7.5	4.4
IncremntDel:	0.0	0.0	0.0	0.8	0.0	6.6	7.6	0.4	0.0	0.0	1.0	0.0
InitQueuDel:	0.0	0.0	0.0	0.0	0.0	0.0	0.0	0.0	0.0	0.0	0.0	0.0
Delay Adj:	0.00	0.00	0.00	1.00	0.00	1.00	1.00	1.00	0.00	0.00	1.00	1.00
Delay/Veh:	0.0	0.0	0.0	37.0	0.0	44.4	49.0	9.1	0.0	0.0	8.5	4.4
User DelAdj:	1.00	1.00	1.00	1.00	1.00	1.00	1.00	1.00	1.00	1.00	1.00	1.00
AdjDel/Veh:	0.0	0.0	0.0	37.0	0.0	44.4	49.0	9.1	0.0	0.0	8.5	4.4
LOS by Move:	A	A	A	D	A	D	D	A	A	A	A	A
HCM2k95thQ:	0	0	0	4	0	8	5	18	0	0	23	1

Level Of Service Computation Report
2000 HCM Operations Method (Future Volume Alternative)

Intersection #206 SR76 & Old Hwy 395

Cycle (sec): 90 Critical Vol./Cap.(X): 0.576
Loss Time (sec): 16 Average Delay (sec/veh): 31.1
Optimal Cycle: OPTIMIZED Level Of Service: C

Street Name:	Old Hwy 395						SR76					
Approach:	North Bound			South Bound			East Bound			West Bound		
Movement:	L	T	R	L	T	R	L	T	R	L	T	R
Control:	Split Phase			Split Phase			Protected			Protected		
Rights:	Include			Include			Include			Include		
Min. Green:	5	5	5	5	5	5	5	5	5	5	5	5
Y+R:	4.0	4.0	4.0	4.0	4.0	4.0	4.0	4.0	4.0	4.0	4.0	4.0
Lanes:	1 0	0	1 0	0 0	1!	0 0	1 0	1	1 0	1 0	2	0 1
Volume Module: PM Peak												
Base Vol:	123	61	56	229	76	49	48	486	41	53	60	95
Growth Adj:	1.00	1.00	1.00	1.00	1.00	1.00	1.00	1.00	1.00	1.00	1.00	1.00
Initial Bse:	123	61	56	229	76	49	48	486	41	53	60	95
Added Vol:	0	0	0	0	0	0	0	0	0	0	0	0
PasserByVol:	0	0	0	0	0	0	0	0	0	0	0	0
Initial Fut:	123	61	56	229	76	49	48	486	41	53	60	95
User Adj:	1.00	1.00	1.00	1.00	1.00	1.00	1.00	1.00	1.00	1.00	1.00	1.00
PHF Adj:	0.95	0.95	0.95	0.95	0.95	0.95	0.95	0.95	0.95	0.95	0.95	0.95
PHF Volume:	129	64	59	241	80	52	51	512	43	56	63	100
Reduct Vol:	0	0	0	0	0	0	0	0	0	0	0	0
Reduced Vol:	129	64	59	241	80	52	51	512	43	56	63	100
PCE Adj:	1.00	1.00	1.00	1.00	1.00	1.00	1.00	1.00	1.00	1.00	1.00	1.00
MLF Adj:	1.00	1.00	1.00	1.00	1.00	1.00	1.00	1.00	1.00	1.00	1.00	1.00
FinalVolume:	129	64	59	241	80	52	51	512	43	56	63	100
Saturation Flow Module:												
Sat/Lane:	1900	1900	1900	1900	1900	1900	1900	1900	1900	1900	1900	1900
Adjustment:	0.93	0.91	0.91	0.93	0.93	0.93	0.93	0.92	0.92	0.93	0.93	0.83
Lanes:	1.00	0.52	0.48	0.65	0.21	0.14	1.00	1.84	0.16	1.00	2.00	1.00
Final Sat.:	1769	901	827	1145	380	245	1769	3223	272	1769	3538	1575
Capacity Analysis Module:												
Vol/Sat:	0.07	0.07	0.07	0.21	0.21	0.21	0.03	0.16	0.16	0.03	0.02	0.06
Crit Moves:	****				****			****		****		
Green/Cycle:	0.13	0.13	0.13	0.36	0.36	0.36	0.15	0.28	0.28	0.06	0.18	0.18
Volume/Cap:	0.58	0.56	0.56	0.58	0.58	0.58	0.19	0.58	0.58	0.57	0.10	0.36
Uniform Del:	37.0	36.9	36.9	23.0	23.0	23.0	33.1	28.1	28.1	41.4	31.1	32.6
IncremntDel:	3.7	3.3	3.3	1.3	1.3	1.3	0.3	0.9	0.9	7.6	0.1	0.8
InitQueuDel:	0.0	0.0	0.0	0.0	0.0	0.0	0.0	0.0	0.0	0.0	0.0	0.0
Delay Adj:	1.00	1.00	1.00	1.00	1.00	1.00	1.00	1.00	1.00	1.00	1.00	1.00
Delay/Veh:	40.7	40.2	40.2	24.3	24.3	24.3	33.5	29.0	29.0	49.0	31.2	33.4
User DelAdj:	1.00	1.00	1.00	1.00	1.00	1.00	1.00	1.00	1.00	1.00	1.00	1.00
AdjDel/Veh:	40.7	40.2	40.2	24.3	24.3	24.3	33.5	29.0	29.0	49.0	31.2	33.4
LOS by Move:	D	D	D	C	C	C	C	C	C	D	C	C
HCM2k95thQ:	8	8	8	16	16	16	3	14	14	3	2	5

Level Of Service Computation Report
2000 HCM Operations Method (Future Volume Alternative)

Intersection #207 SR76 & I-15 SB Ramps

Cycle (sec): 90 Critical Vol./Cap.(X): 0.820
Loss Time (sec): 12 Average Delay (sec/veh): 31.1
Optimal Cycle: OPTIMIZED Level Of Service: C

Street Name:	I-15 SB Ramps									SR76		
Approach:	North Bound			South Bound			East Bound			West Bound		
Movement:	L	T	R	L	T	R	L	T	R	L	T	R
Control:	Split Phase			Split Phase			Protected			Protected		
Rights:	Include			Include			Include			Include		
Min. Green:	5	5	5	5	5	5	5	5	5	5	5	5
Y+R:	4.0	4.0	4.0	4.0	4.0	4.0	4.0	4.0	4.0	4.0	4.0	4.0
Lanes:	0	0	0	0	0	0	1	0	0	1	0	0
Volume Module:PM Peak												
Base Vol:	0	0	0	79	4	558	0	518	329	78	243	0
Growth Adj:	1.00	1.00	1.00	1.00	1.00	1.00	1.00	1.00	1.00	1.00	1.00	1.00
Initial Bse:	0	0	0	79	4	558	0	518	329	78	243	0
Added Vol:	0	0	0	0	0	0	0	0	0	0	0	0
PasserByVol:	0	0	0	0	0	0	0	0	0	0	0	0
Initial Fut:	0	0	0	79	4	558	0	518	329	78	243	0
User Adj:	1.00	1.00	1.00	1.00	1.00	1.00	1.00	1.00	1.00	1.00	1.00	1.00
PHF Adj:	0.95	0.95	0.95	0.95	0.95	0.95	0.95	0.95	0.95	0.95	0.95	0.95
PHF Volume:	0	0	0	83	4	587	0	545	346	82	256	0
Reduct Vol:	0	0	0	0	0	0	0	0	0	0	0	0
Reduced Vol:	0	0	0	83	4	587	0	545	346	82	256	0
PCE Adj:	1.00	1.00	1.00	1.00	1.00	1.00	1.00	1.00	1.00	1.00	1.00	1.00
MLF Adj:	1.00	1.00	1.00	1.00	1.00	1.00	1.00	1.00	1.00	1.00	1.00	1.00
FinalVolume:	0	0	0	83	4	587	0	545	346	82	256	0
Saturation Flow Module:												
Sat/Lane:	1900	1900	1900	1900	1900	1900	1900	1900	1900	1900	1900	1900
Adjustment:	1.00	1.00	1.00	0.96	0.96	0.83	1.00	0.98	0.83	0.93	0.98	1.00
Lanes:	0.00	0.00	0.00	0.95	0.05	1.00	0.00	1.00	1.00	1.00	1.00	0.00
Final Sat.:	0	0	0	1740	88	1583	0	1862	1583	1769	1862	0
Capacity Analysis Module:												
Vol/Sat:	0.00	0.00	0.00	0.05	0.05	0.37	0.00	0.29	0.22	0.05	0.14	0.00
Crit Moves:						****		****		****		
Green/Cycle:	0.00	0.00	0.00	0.45	0.45	0.45	0.00	0.36	0.36	0.06	0.29	0.00
Volume/Cap:	0.00	0.00	0.00	0.11	0.11	0.82	0.00	0.82	0.61	0.82	0.47	0.00
Uniform Del:	0.0	0.0	0.0	14.2	14.2	21.4	0.0	26.3	23.8	42.0	25.9	0.0
IncremntDel:	0.0	0.0	0.0	0.1	0.1	7.4	0.0	8.0	2.0	39.2	0.6	0.0
InitQueuDel:	0.0	0.0	0.0	0.0	0.0	0.0	0.0	0.0	0.0	0.0	0.0	0.0
Delay Adj:	0.00	0.00	0.00	1.00	1.00	1.00	0.00	1.00	1.00	1.00	1.00	0.00
Delay/Veh:	0.0	0.0	0.0	14.2	14.2	28.9	0.0	34.3	25.8	81.2	26.6	0.0
User DelAdj:	1.00	1.00	1.00	1.00	1.00	1.00	1.00	1.00	1.00	1.00	1.00	1.00
AdjDel/Veh:	0.0	0.0	0.0	14.2	14.2	28.9	0.0	34.3	25.8	81.2	26.6	0.0
LOS by Move:	A	A	A	B	B	C	A	C	C	F	C	A
HCM2k95thQ:	0	0	0	3	3	29	0	25	15	5	11	0

Level Of Service Computation Report
2000 HCM Operations Method (Future Volume Alternative)

Intersection #208 SR76 & I-15 NB Ramps

Cycle (sec): 90 Critical Vol./Cap.(X): 0.488
Loss Time (sec): 12 Average Delay (sec/veh): 23.6
Optimal Cycle: OPTIMIZED Level Of Service: C

Street Name:	I-15 NB Ramps									SR76		
Approach:	North Bound			South Bound			East Bound			West Bound		
Movement:	L	T	R	L	T	R	L	T	R	L	T	R
Control:	Split Phase			Split Phase			Protected			Protected		
Rights:	Include			Include			Include			Include		
Min. Green:	5	5	5	5	5	5	5	5	5	5	5	5
Y+R:	4.0	4.0	4.0	4.0	4.0	4.0	4.0	4.0	4.0	4.0	4.0	4.0
Lanes:	0	1	0	0	1	0	0	0	0	1	0	1
Volume Module:PM Peak												
Base Vol:	137	1	124	0	0	0	401	201	0	0	176	59
Growth Adj:	1.00	1.00	1.00	1.00	1.00	1.00	1.00	1.00	1.00	1.00	1.00	1.00
Initial Bse:	137	1	124	0	0	0	401	201	0	0	176	59
Added Vol:	0	0	0	0	0	0	0	0	0	0	0	0
PasserByVol:	0	0	0	0	0	0	0	0	0	0	0	0
Initial Fut:	137	1	124	0	0	0	401	201	0	0	176	59
User Adj:	1.00	1.00	1.00	1.00	1.00	1.00	1.00	1.00	1.00	1.00	1.00	1.00
PHF Adj:	0.95	0.95	0.95	0.95	0.95	0.95	0.95	0.95	0.95	0.95	0.95	0.95
PHF Volume:	144	1	131	0	0	0	422	212	0	0	185	62
Reduct Vol:	0	0	0	0	0	0	0	0	0	0	0	0
Reduced Vol:	144	1	131	0	0	0	422	212	0	0	185	62
PCE Adj:	1.00	1.00	1.00	1.00	1.00	1.00	1.00	1.00	1.00	1.00	1.00	1.00
MLF Adj:	1.00	1.00	1.00	1.00	1.00	1.00	1.00	1.00	1.00	1.00	1.00	1.00
FinalVolume:	144	1	131	0	0	0	422	212	0	0	185	62
Saturation Flow Module:												
Sat/Lane:	1900	1900	1900	1900	1900	1900	1900	1900	1900	1900	1900	1900
Adjustment:	0.90	0.90	0.83	1.00	1.00	1.00	0.93	0.98	1.00	1.00	0.98	0.83
Lanes:	0.99	0.01	1.00	0.00	0.00	0.00	1.00	1.00	0.00	0.00	1.00	1.00
Final Sat.:	1704	12	1583	0	0	0	1769	1862	0	0	1862	1583
Capacity Analysis Module:												
Vol/Sat:	0.08	0.08	0.08	0.00	0.00	0.00	0.24	0.11	0.00	0.00	0.10	0.04
Crit Moves:	****						****				****	
Green/Cycle:	0.17	0.17	0.17	0.00	0.00	0.00	0.49	0.47	0.00	0.00	0.20	0.20
Volume/Cap:	0.49	0.49	0.48	0.00	0.00	0.00	0.49	0.24	0.00	0.00	0.49	0.19
Uniform Del:	33.6	33.6	33.5	0.0	0.0	0.0	15.4	14.5	0.0	0.0	31.7	29.7
IncremntDel:	1.3	1.3	1.3	0.0	0.0	0.0	0.4	0.1	0.0	0.0	1.0	0.3
InitQueuDel:	0.0	0.0	0.0	0.0	0.0	0.0	0.0	0.0	0.0	0.0	0.0	0.0
Delay Adj:	1.00	1.00	1.00	0.00	0.00	0.00	1.00	1.00	0.00	0.00	1.00	1.00
Delay/Veh:	34.8	34.8	34.8	0.0	0.0	0.0	15.9	14.6	0.0	0.0	32.7	30.0
User DelAdj:	1.00	1.00	1.00	1.00	1.00	1.00	1.00	1.00	1.00	1.00	1.00	1.00
AdjDel/Veh:	34.8	34.8	34.8	0.0	0.0	0.0	15.9	14.6	0.0	0.0	32.7	30.0
LOS by Move:	C	C	C	A	A	A	B	B	A	A	C	C
HCM2k95thQ:	8	8	8	0	0	0	14	7	0	0	10	3

Level Of Service Computation Report
2000 HCM Unsignalized Method (Future Volume Alternative)

Intersection #209 SR76 & Pankey Rd

Average Delay (sec/veh): 0.8 Worst Case Level Of Service: B[12.3]

Street Name:	Pankey Rd									SR76							
Approach:	North Bound				South Bound				East Bound				West Bound				
Movement:	L	-	T	-	R	L	-	T	-	R	L	-	T	-	R	L	-	T	-	R
Control:	Stop Sign					Stop Sign					Uncontrolled					Uncontrolled				
Rights:	Include					Include					Include					Include				
Lanes:	0	0	1!	0	0	0	0	1!	0	0	1	0	1	1	0	1	0	1	1	0
Volume Module: >> Count Date: 25 Oct 2006 <<																				
Base Vol:	21		0		8	1		0		2	3		309		6	5		205		1
Growth Adj:	1.00	1.00	1.00	1.00	1.00	1.00	1.00	1.00	1.00	1.00	1.00	1.00	1.00	1.00	1.00	1.00	1.00	1.00	1.00	1.00
Initial Bse:	21		0		8	1		0		2	3		309		6	5		205		1
Added Vol:	0		0		0	0		0		0	0		0		0	0		0		0
PasserByVol:	0		0		0	0		0		0	0		0		0	0		0		0
Initial Fut:	21		0		8	1		0		2	3		309		6	5		205		1
User Adj:	1.00	1.00	1.00	1.00	1.00	1.00	1.00	1.00	1.00	1.00	1.00	1.00	1.00	1.00	1.00	1.00	1.00	1.00	1.00	1.00
PHF Adj:	0.95	0.95	0.95	0.95	0.95	0.95	0.95	0.95	0.95	0.95	0.95	0.95	0.95	0.95	0.95	0.95	0.95	0.95	0.95	0.95
PHF Volume:	22		0		8	1		0		2	3		325		6	5		216		1
Reduct Vol:	0		0		0	0		0		0	0		0		0	0		0		0
FinalVolume:	22		0		8	1		0		2	3		325		6	5		216		1
Critical Gap Module:																				
Critical Gp:	7.5	6.5		6.9		7.5	6.5		6.9		4.1	xxxx	xxxxx			4.1	xxxx	xxxxx		
FollowUpTim:	3.5	4.0		3.3		3.5	4.0		3.3		2.2	xxxx	xxxxx			2.2	xxxx	xxxxx		
Capacity Module:																				
Cnflict Vol:	473	582		186		416	585		128		227	xxxx	xxxxx			342	xxxx	xxxxx		
Potent Cap.:	474	423		825		521	422		898		1339	xxxx	xxxxx			1214	xxxx	xxxxx		
Move Cap.:	463	413		811		504	412		883		1328	xxxx	xxxxx			1204	xxxx	xxxxx		
Volume/Cap:	0.05	0.00		0.01		0.00	0.00		0.00		0.00	xxxx	xxxx			0.00	xxxx	xxxx		
Level Of Service Module:																				
2Way95thQ:	xxxx	xxxx	xxxxx			xxxx	xxxx	xxxxx			0.0	xxxx	xxxxx			0.0	xxxx	xxxxx		
Control Del:	xxxxx	xxxx	xxxxx			xxxxx	xxxx	xxxxx			7.7	xxxx	xxxxx			8.0	xxxx	xxxxx		
LOS by Move:	*		*		*	*		*		*	A		*		*	A		*		*
Movement:	LT - LTR - RT					LT - LTR - RT					LT - LTR - RT					LT - LTR - RT				
Shared Cap.:	xxxx	525	xxxxx		xxxx	706	xxxxx		xxxx	xxxx	xxxxx		xxxx	xxxx	xxxxx					
SharedQueue:	xxxxx	0.2	xxxxx		xxxxx	0.0	xxxxx		xxxxx	xxxx	xxxxx		xxxxx	xxxx	xxxxx					
Shrd ConDel:	xxxxx	12.3	xxxxx		xxxxx	10.1	xxxxx		xxxxx	xxxx	xxxxx		xxxxx	xxxx	xxxxx					
Shared LOS:	*	B		*		*	B		*		*		*		*					
ApproachDel:	12.3					10.1					xxxxxx					xxxxxx				
ApproachLOS:	B					B					*					*				

Note: Queue reported is the number of cars per lane.

Level Of Service Computation Report
2000 HCM Unsignalized Method (Future Volume Alternative)

Intersection #210 SR76 & Horse Ranch Creek Rd

Average Delay (sec/veh): 0.0 Worst Case Level Of Service: A[0.0]

Street Name:	Horse Ranch Creek Rd									SR76							
Approach:	North Bound				South Bound				East Bound				West Bound				
Movement:	L	-	T	-	R	L	-	T	-	R	L	-	T	-	R	L	-	T	-	R
Control:	Stop Sign					Stop Sign					Uncontrolled					Uncontrolled				
Rights:	Include					Include					Include					Include				
Lanes:	0	0	1!	0	0	0	0	1!	0	0	0	0	1	0	0	0	0	1	0	0
Volume Module:																				
Base Vol:	0		0		0	0		0		0	0		318		0	0		211		0
Growth Adj:	1.00	1.00	1.00	1.00	1.00	1.00	1.00	1.00	1.00	1.00	1.00	1.00	1.00	1.00	1.00	1.00	1.00	1.00	1.00	1.00
Initial Bse:	0		0		0	0		0		0	0		318		0	0		211		0
Added Vol:	0		0		0	0		0		0	0		0		0	0		0		0
PasserByVol:	0		0		0	0		0		0	0		0		0	0		0		0
Initial Fut:	0		0		0	0		0		0	0		318		0	0		211		0
User Adj:	1.00	1.00	1.00	1.00	1.00	1.00	1.00	1.00	1.00	1.00	1.00	1.00	1.00	1.00	1.00	1.00	1.00	1.00	1.00	1.00
PHF Adj:	0.95	0.95	0.95	0.95	0.95	0.95	0.95	0.95	0.95	0.95	0.95	0.95	0.95	0.95	0.95	0.95	0.95	0.95	0.95	0.95
PHF Volume:	0		0		0	0		0		0	0		335		0	0		222		0
Reduct Vol:	0		0		0	0		0		0	0		0		0	0		0		0
FinalVolume:	0		0		0	0		0		0	0		335		0	0		222		0
Critical Gap Module:																				
Critical Gp:	6.4	6.5		6.2		6.4	6.5		6.2		xxxxx	xxxx	xxxxx			xxxxx	xxxx	xxxxx		
FollowUpTim:	3.5	4.0		3.3		3.5	4.0		3.3		xxxxx	xxxx	xxxxx			xxxxx	xxxx	xxxxx		
Capacity Module:																				
Cnflict Vol:	557	557		335		557	557		222		xxxx	xxxx	xxxxx			xxxx	xxxx	xxxxx		
Potent Cap.:	492	439		707		492	439		817		xxxx	xxxx	xxxxx			xxxx	xxxx	xxxxx		
Move Cap.:	492	439		707		492	439		817		xxxx	xxxx	xxxxx			xxxx	xxxx	xxxxx		
Volume/Cap:	0.00	0.00		0.00		0.00	0.00		0.00		xxxx	xxxx	xxxx			xxxx	xxxx	xxxx		
Level Of Service Module:																				
2Way95thQ:	xxxx	xxxx	xxxxx			xxxx	xxxx	xxxxx			xxxx	xxxx	xxxxx			xxxx	xxxx	xxxxx		
Control Del:	xxxxx	xxxx	xxxxx			xxxxx	xxxx	xxxxx			xxxxx	xxxx	xxxxx			xxxxx	xxxx	xxxxx		
LOS by Move:	*		*		*	*		*		*	*		*		*	*		*		*
Movement:	LT - LTR - RT					LT - LTR - RT					LT - LTR - RT					LT - LTR - RT				
Shared Cap.:	xxxx	0	xxxxx		xxxx	0	xxxxx		xxxx	xxxx	xxxxx		xxxx	xxxx	xxxxx					
SharedQueue:	xxxxx	xxxx	xxxxx		xxxxx	xxxx	xxxxx		xxxxx	xxxx	xxxxx		xxxxx	xxxx	xxxxx					
Shrd ConDel:	xxxxx	xxxx	xxxxx		xxxxx	xxxx	xxxxx		xxxxx	xxxx	xxxxx		xxxxx	xxxx	xxxxx					
Shared LOS:	*		*		*	*		*		*	*		*		*	*		*		*
ApproachDel:	xxxxxx					xxxxxx					xxxxxx					xxxxxx				
ApproachLOS:	*					*					*					*				

Note: Queue reported is the number of cars per lane.

Level Of Service Computation Report
2000 HCM Unsignalized Method (Future Volume Alternative)

Intersection #211 SR76 & Rice Cyn Rd

Average Delay (sec/veh): 0.9 Worst Case Level Of Service: B[11.2]

Street Name:	Rice Cyn Rd								SR76							
Approach:	North Bound				South Bound				East Bound				West Bound			
Movement:	L	-	T	- R	L	-	T	- R	L	-	T	- R	L	-	T	- R
Control:	Stop Sign				Stop Sign				Uncontrolled				Uncontrolled			
Rights:	Include				Include				Include				Include			
Lanes:	0 0	0	0	0	0 0	1!	0	0	0 1	0	0	0	0 0	0	1	0
Volume Module: >> Count Date: 19 Oct 2006 <<																
Base Vol:	0	0	0	15	0	24			11	281	0	0	209		9	
Growth Adj:	1.00	1.00	1.00	1.00	1.00	1.00			1.00	1.00	1.00	1.00	1.00		1.00	
Initial Bse:	0	0	0	15	0	24			11	281	0	0	209		9	
Added Vol:	0	0	0	0	0	0			0	0	0	0	0		0	
PasserByVol:	0	0	0	0	0	0			0	0	0	0	0		0	
Initial Fut:	0	0	0	15	0	24			11	281	0	0	209		9	
User Adj:	1.00	1.00	1.00	1.00	1.00	1.00			1.00	1.00	1.00	1.00	1.00		1.00	
PHF Adj:	0.95	0.95	0.95	0.95	0.95	0.95			0.95	0.95	0.95	0.95	0.95		0.95	
PHF Volume:	0	0	0	16	0	25			12	296	0	0	220		9	
Reduct Vol:	0	0	0	0	0	0			0	0	0	0	0		0	
FinalVolume:	0	0	0	16	0	25			12	296	0	0	220		9	
Critical Gap Module:																
Critical Gp:	xxxxx	xxxx	xxxxx	6.4	6.5	6.2			4.1	xxxx	xxxxx	xxxxx	xxxx		xxxxx	
FollowUpTim:	xxxxx	xxxx	xxxxx	3.5	4.0	3.3			2.2	xxxx	xxxxx	xxxxx	xxxx		xxxxx	
Capacity Module:																
Cnflict Vol:	xxxx	xxxx	xxxxx	564	564	245			239	xxxx	xxxxx	xxxx	xxxx		xxxxx	
Potent Cap.:	xxxx	xxxx	xxxxx	487	435	794			1327	xxxx	xxxxx	xxxx	xxxx		xxxxx	
Move Cap.:	xxxx	xxxx	xxxxx	476	424	781			1316	xxxx	xxxxx	xxxx	xxxx		xxxxx	
Volume/Cap:	xxxx	xxxx	xxxx	0.03	0.00	0.03			0.01	xxxx	xxxx	xxxx	xxxx		xxxx	
Level Of Service Module:																
2Way95thQ:	xxxx	xxxx	xxxxx	xxxx	xxxx	xxxxx			0.0	xxxx	xxxxx	xxxx	xxxx		xxxxx	
Control Del:	xxxxx	xxxx	xxxxx	xxxxx	xxxx	xxxxx			7.8	xxxx	xxxxx	xxxxx	xxxx		xxxxx	
LOS by Move:	*	*	*	*	*	*			A	*	*	*	*		*	
Movement:	LT - LTR - RT				LT - LTR - RT				LT - LTR - RT				LT - LTR - RT			
Shared Cap.:	xxxx	xxxx	xxxxx	xxxx	626	xxxxx			xxxx	xxxx	xxxxx	xxxx	xxxx		xxxxx	
SharedQueue:	xxxxx	xxxx	xxxxx	xxxxx	0.2	xxxxx			0.0	xxxx	xxxxx	xxxxx	xxxx		xxxxx	
Shrd ConDel:	xxxxx	xxxx	xxxxx	xxxxx	11.2	xxxxx			7.8	xxxx	xxxxx	xxxxx	xxxx		xxxxx	
Shared LOS:	*	*	*	*	B	*			A	*	*	*	*		*	
ApproachDel:	xxxxxx				11.2				xxxxxx				xxxxxx			
ApproachLOS:	*				B				*				*			

Note: Queue reported is the number of cars per lane.

Level Of Service Computation Report
2000 HCM Unsignalized Method (Future Volume Alternative)

Intersection #212 SR76 & Couser Cyn Rd

Average Delay (sec/veh): 0.9 Worst Case Level Of Service: B[12.3]

Street Name:	Couser Cyn Rd								SR76							
Approach:	North Bound				South Bound				East Bound				West Bound			
Movement:	L	-	T	- R	L	-	T	- R	L	-	T	- R	L	-	T	- R
Control:	Stop Sign				Stop Sign				Uncontrolled				Uncontrolled			
Rights:	Include				Include				Include				Include			
Lanes:	0 0	1!	0	0	0 0	1!	0	0	0 0	0	1	0	0 1	0	0	0
Volume Module:																
Base Vol:	27	0	7		0	0	0		0	286	10		5	188	0	
Growth Adj:	1.00	1.00	1.00		1.00	1.00	1.00		1.00	1.00	1.00		1.00	1.00	1.00	
Initial Bse:	27	0	7		0	0	0		0	286	10		5	188	0	
Added Vol:	0	0	0		0	0	0		0	0	0		0	0	0	
PasserByVol:	0	0	0		0	0	0		0	0	0		0	0	0	
Initial Fut:	27	0	7		0	0	0		0	286	10		5	188	0	
User Adj:	1.00	1.00	1.00		1.00	1.00	1.00		1.00	1.00	1.00		1.00	1.00	1.00	
PHF Adj:	0.95	0.95	0.95		0.95	0.95	0.95		0.95	0.95	0.95		0.95	0.95	0.95	
PHF Volume:	28	0	7		0	0	0		0	301	11		5	198	0	
Reduct Vol:	0	0	0		0	0	0		0	0	0		0	0	0	
FinalVolume:	28	0	7		0	0	0		0	301	11		5	198	0	
Critical Gap Module:																
Critical Gp:	6.4	6.5	6.2		7.1	6.5	6.2		xxxxx	xxxx	xxxxx		4.1	xxxx	xxxxx	
FollowUpTim:	3.5	4.0	3.3		3.5	4.0	3.3		xxxxx	xxxx	xxxxx		2.2	xxxx	xxxxx	
Capacity Module:																
Cnflict Vol:	535	535	326		538	540	218		xxxx	xxxx	xxxxx		322	xxxx	xxxxx	
Potent Cap.:	506	452	715		454	449	822		xxxx	xxxx	xxxxx		1238	xxxx	xxxxx	
Move Cap.:	496	442	703		440	439	808		xxxx	xxxx	xxxxx		1228	xxxx	xxxxx	
Volume/Cap:	0.06	0.00	0.01		0.00	0.00	0.00		xxxx	xxxx	xxxx		0.00	xxxx	xxxx	
Level Of Service Module:																
2Way95thQ:	xxxx	xxxx	xxxxx	xxxx	xxxx	xxxxx	xxxx	xxxx	xxxxx		0.0	xxxx	xxxxx			
Control Del:	xxxxx	xxxx	xxxxx	xxxxx	xxxx	xxxxx	xxxxx	xxxx	xxxxx		7.9	xxxx	xxxxx			
LOS by Move:	*	*	*	*	*	*	*	*	*		A	*	*			
Movement:	LT - LTR - RT				LT - LTR - RT				LT - LTR - RT				LT - LTR - RT			
Shared Cap.:	xxxx	528	xxxxx	xxxx	0	xxxxx	xxxx	xxxx	xxxxx		xxxx	xxxx	xxxxx			
SharedQueue:	xxxxx	0.2	xxxxx	xxxxx	xxxx	xxxxx	xxxxx	xxxx	xxxxx		0.0	xxxx	xxxxx			
Shrd ConDel:	xxxxx	12.3	xxxxx	xxxxx	xxxx	xxxxx	xxxxx	xxxx	xxxxx		7.9	xxxx	xxxxx			
Shared LOS:	*	B	*	*	*	*	*	*	*		A	*	*			
ApproachDel:	12.3				xxxxxx				xxxxxx				xxxxxx			
ApproachLOS:	B				*				*				*			

Note: Queue reported is the number of cars per lane.

Level Of Service Computation Report
2000 HCM Operations Method (Future Volume Alternative)

Intersection #214 SR76 & C. Drwy

Cycle (sec): 180 Critical Vol./Cap.(X): 0.157
Loss Time (sec): 12 Average Delay (sec/veh): 0.5
Optimal Cycle: OPTIMIZED Level Of Service: A

Street Name:	C. Drwy									SR76					
Approach:	North Bound			South Bound			East Bound			West Bound					
Movement:	L	- T	- R	L	- T	- R	L	- T	- R	L	- T	- R			
Control:	Protected			Protected			Permitted			Permitted					
Rights:	Include			Include			Include			Include					
Min. Green:	5	5	5	5	5	5	5	5	5	5	5	5			
Y+R:	4.0	4.0	4.0	4.0	4.0	4.0	4.0	4.0	4.0	4.0	4.0	4.0			
Lanes:	0	0	1! 0	0	1	0	0	0	1	1	0	1	0	0	0	0	1	0	1
Volume Module:															
Base Vol:	0	0	0	0	0	0	0	259	0	0	210	0			
Growth Adj:	1.00	1.00	1.00	1.00	1.00	1.00	1.00	1.00	1.00	1.00	1.00	1.00			
Initial Bse:	0	0	0	0	0	0	0	259	0	0	210	0			
Added Vol:	0	0	0	0	0	0	0	0	0	0	0	0			
PasserByVol:	0	0	0	0	0	0	0	0	0	0	0	0			
Initial Fut:	0	0	0	0	0	0	0	259	0	0	210	0			
User Adj:	1.00	1.00	1.00	1.00	1.00	1.00	1.00	1.00	1.00	1.00	1.00	1.00			
PHF Adj:	0.95	0.95	0.95	0.95	0.95	0.95	0.95	0.95	0.95	0.95	0.95	0.95			
PHF Volume:	0	0	0	0	0	0	0	273	0	0	221	0			
Reduct Vol:	0	0	0	0	0	0	0	0	0	0	0	0			
Reduced Vol:	0	0	0	0	0	0	0	273	0	0	221	0			
PCE Adj:	1.00	1.00	1.00	1.00	1.00	1.00	1.00	1.00	1.00	1.00	1.00	1.00			
MLF Adj:	1.00	1.00	1.00	1.00	1.00	1.00	1.00	1.00	1.00	1.00	1.00	1.00			
FinalVolume:	0	0	0	0	0	0	0	273	0	0	221	0			
Saturation Flow Module:															
Sat/Lane:	1900	1900	1900	1900	1900	1900	1900	1900	1900	1900	1900	1900			
Adjustment:	1.00	1.00	1.00	1.00	1.00	1.00	1.00	0.98	1.00	1.00	0.98	1.00			
Lanes:	0.00	1.00	0.00	1.00	0.00	1.00	1.00	1.00	0.00	0.00	1.00	1.00			
Final Sat.:	0	1900	0	1900	0	1900	1900	1862	0	0	1862	1900			
Capacity Analysis Module:															
Vol/Sat:	0.00	0.00	0.00	0.00	0.00	0.00	0.00	0.15	0.00	0.00	0.12	0.00			
Crit Moves:								****							
Green/Cycle:	0.00	0.00	0.00	0.00	0.00	0.00	0.00	0.93	0.00	0.00	0.93	0.00			
Volume/Cap:	0.00	0.00	0.00	0.00	0.00	0.00	0.00	0.16	0.00	0.00	0.13	0.00			
Uniform Del:	0.0	0.0	0.0	0.0	0.0	0.0	0.0	0.5	0.0	0.0	0.5	0.0			
IncremntDel:	0.0	0.0	0.0	0.0	0.0	0.0	0.0	0.0	0.0	0.0	0.0	0.0			
InitQueuDel:	0.0	0.0	0.0	0.0	0.0	0.0	0.0	0.0	0.0	0.0	0.0	0.0			
Delay Adj:	0.00	0.00	0.00	0.00	0.00	0.00	0.00	1.00	0.00	0.00	1.00	0.00			
Delay/Veh:	0.0	0.0	0.0	0.0	0.0	0.0	0.0	0.5	0.0	0.0	0.5	0.0			
User DelAdj:	1.00	1.00	1.00	1.00	1.00	1.00	1.00	1.00	1.00	1.00	1.00	1.00			
AdjDel/Veh:	0.0	0.0	0.0	0.0	0.0	0.0	0.0	0.5	0.0	0.0	0.5	0.0			
LOS by Move:	A	A	A	A	A	A	A	A	A	A	A	A			
HCM2k95thQ:	0	0	0	0	0	0	0	3	0	0	2	0			

Level Of Service Computation Report
2000 HCM Operations Method (Future Volume Alternative)

Intersection #216 SR76 & W. Pala Mission Rd

Cycle (sec): 90 Critical Vol./Cap.(X): 0.232
Loss Time (sec): 12 Average Delay (sec/veh): 26.4
Optimal Cycle: OPTIMIZED Level Of Service: C

Street Name:	W. Pala Mission Rd									SR76					
Approach:	North Bound			South Bound			East Bound			West Bound					
Movement:	L	- T	- R	L	- T	- R	L	- T	- R	L	- T	- R			
Control:	Split Phase			Split Phase			Protected			Protected					
Rights:	Include			Include			Include			Include					
Min. Green:	5	5	5	5	5	5	5	5	5	5	5	5			
Y+R:	4.0	4.0	4.0	4.0	4.0	4.0	4.0	4.0	4.0	4.0	4.0	4.0			
Lanes:	1	0	0 1	0	0	1	0	0	1	1	0	1	1	0	1	0	0	1	0
Volume Module:															
Base Vol:	10	8	3	19	14	108	104	150	5	5	92	14			
Growth Adj:	1.00	1.00	1.00	1.00	1.00	1.00	1.00	1.00	1.00	1.00	1.00	1.00			
Initial Bse:	10	8	3	19	14	108	104	150	5	5	92	14			
Added Vol:	0	0	0	0	0	0	0	0	0	0	0	0			
PasserByVol:	0	0	0	0	0	0	0	0	0	0	0	0			
Initial Fut:	10	8	3	19	14	108	104	150	5	5	92	14			
User Adj:	1.00	1.00	1.00	1.00	1.00	1.00	1.00	1.00	1.00	1.00	1.00	1.00			
PHF Adj:	0.95	0.95	0.95	0.95	0.95	0.95	0.95	0.95	0.95	0.95	0.95	0.95			
PHF Volume:	11	8	3	20	15	114	109	158	5	5	97	15			
Reduct Vol:	0	0	0	0	0	0	0	0	0	0	0	0			
Reduced Vol:	11	8	3	20	15	114	109	158	5	5	97	15			
PCE Adj:	1.00	1.00	1.00	1.00	1.00	1.00	1.00	1.00	1.00	1.00	1.00	1.00			
MLF Adj:	1.00	1.00	1.00	1.00	1.00	1.00	1.00	1.00	1.00	1.00	1.00	1.00			
FinalVolume:	11	8	3	20	15	114	109	158	5	5	97	15			
Saturation Flow Module:															
Sat/Lane:	1900	1900	1900	1900	1900	1900	1900	1900	1900	1900	1900	1900			
Adjustment:	0.93	0.94	0.94	0.95	0.95	0.83	0.93	0.93	0.93	0.93	0.96	0.96			
Lanes:	1.00	0.73	0.27	0.58	0.42	1.00	1.00	1.94	0.06	1.00	0.87	0.13			
Final Sat.:	1769	1299	487	1042	768	1583	1769	3407	114	1769	1584	241			
Capacity Analysis Module:															
Vol/Sat:	0.01	0.01	0.01	0.02	0.02	0.07	0.06	0.05	0.05	0.00	0.06	0.06			
Crit Moves:		****				****	****				****				
Green/Cycle:	0.06	0.06	0.06	0.30	0.30	0.30	0.26	0.26	0.26	0.26	0.25	0.25			
Volume/Cap:	0.11	0.12	0.12	0.06	0.06	0.24	0.24	0.18	0.18	0.01	0.24	0.24			
Uniform Del:	40.4	40.4	40.4	22.5	22.5	23.8	26.4	26.1	26.1	25.0	26.6	26.6			
IncremntDel:	0.5	0.5	0.5	0.1	0.1	0.3	0.3	0.1	0.1	0.0	0.3	0.3			
InitQueuDel:	0.0	0.0	0.0	0.0	0.0	0.0	0.0	0.0	0.0	0.0	0.0	0.0			
Delay Adj:	1.00	1.00	1.00	1.00	1.00	1.00	1.00	1.00	1.00	1.00	1.00	1.00			
Delay/Veh:	40.9	40.9	40.9	22.6	22.6	24.1	26.7	26.2	26.2	25.0	26.9	26.9			
User DelAdj:	1.00	1.00	1.00	1.00	1.00	1.00	1.00	1.00	1.00	1.00	1.00	1.00			
AdjDel/Veh:	40.9	40.9	40.9	22.6	22.6	24.1	26.7	26.2	26.2	25.0	26.9	26.9			
LOS by Move:	D	D	D	C	C	C	C	C	C	C	C	C			
HCM2k95thQ:	1	1	1	1	1	5	5	4	4	0	5	5			

Level Of Service Computation Report
2000 HCM 4-Way Stop Method (Future Volume Alternative)

Intersection #217 Pala Mission Rd & Pala Temecula Rd

Cycle (sec): 100 Critical Vol./Cap.(X): 0.436
Loss Time (sec): 0 Average Delay (sec/veh): 9.7
Optimal Cycle: 0 Level Of Service: A

Street Name:	Pala Temecula Rd						Pala Mission Rd					
Approach:	North Bound			South Bound			East Bound			West Bound		
Movement:	L -	T -	R	L -	T -	R	L -	T -	R	L -	T -	R
Control:	Stop Sign			Stop Sign			Stop Sign			Stop Sign		
Rights:	Include			Include			Include			Include		
Min. Green:	5	5	5	5	5	5	5	5	5	5	5	5
Lanes:	0 0	0 1	0	0 0	1! 0	0	0 0	1! 0	0	0 0	1! 0	0
Volume Module:												
Base Vol:	0	6	9	167	40	124	70	44	4	1	14	87
Growth Adj:	1.00	1.00	1.00	1.00	1.00	1.00	1.00	1.00	1.00	1.00	1.00	1.00
Initial Bse:	0	6	9	167	40	124	70	44	4	1	14	87
Added Vol:	0	0	0	0	0	0	0	0	0	0	0	0
PasserByVol:	0	0	0	0	0	0	0	0	0	0	0	0
Initial Fut:	0	6	9	167	40	124	70	44	4	1	14	87
User Adj:	1.00	1.00	1.00	1.00	1.00	1.00	1.00	1.00	1.00	1.00	1.00	1.00
PHF Adj:	0.95	0.95	0.95	0.95	0.95	0.95	0.95	0.95	0.95	0.95	0.95	0.95
PHF Volume:	0	6	9	176	42	131	74	46	4	1	15	92
Reduct Vol:	0	0	0	0	0	0	0	0	0	0	0	0
Reduced Vol:	0	6	9	176	42	131	74	46	4	1	15	92
PCE Adj:	1.00	1.00	1.00	1.00	1.00	1.00	1.00	1.00	1.00	1.00	1.00	1.00
MLF Adj:	1.00	1.00	1.00	1.00	1.00	1.00	1.00	1.00	1.00	1.00	1.00	1.00
FinalVolume:	0	6	9	176	42	131	74	46	4	1	15	92
Saturation Flow Module:												
Adjustment:	1.00	1.00	1.00	1.00	1.00	1.00	1.00	1.00	1.00	1.00	1.00	1.00
Lanes:	0.00	0.40	0.60	0.51	0.12	0.37	0.60	0.37	0.03	0.01	0.14	0.85
Final Sat.:	0	298	447	403	97	300	404	254	23	7	104	649
Capacity Analysis Module:												
Vol/Sat:	xxxx	0.02	0.02	0.44	0.44	0.44	0.18	0.18	0.18	0.14	0.14	0.14
Crit Moves:			****		****		****			****		
Delay/Veh:	0.0	7.6	7.6	10.5	10.5	10.5	9.0	9.0	9.0	8.1	8.1	8.1
Delay Adj:	1.00	1.00	1.00	1.00	1.00	1.00	1.00	1.00	1.00	1.00	1.00	1.00
AdjDel/Veh:	0.0	7.6	7.6	10.5	10.5	10.5	9.0	9.0	9.0	8.1	8.1	8.1
LOS by Move:	*	A	A	B	B	B	A	A	A	A	A	A
ApproachDel:	7.6			10.5			9.0			8.1		
Delay Adj:	1.00			1.00			1.00			1.00		
ApprAdjDel:	7.6			10.5			9.0			8.1		
LOS by Appr:	A			B			A			A		
AllWayAvgQ:	0.0	0.0	0.0	0.7	0.7	0.7	0.2	0.2	0.2	0.1	0.1	0.1

Note: Queue reported is the number of cars per lane.

Level Of Service Computation Report
2000 HCM Unsignalized Method (Future Volume Alternative)

Intersection #218 SR76 & Brittain Rd

Average Delay (sec/veh): 0.3 Worst Case Level Of Service: A[9.1]

Street Name:	Brittain Rd						SR76					
Approach:	North Bound			South Bound			East Bound			West Bound		
Movement:	L -	T -	R	L -	T -	R	L -	T -	R	L -	T -	R
Control:	Stop Sign			Stop Sign			Uncontrolled			Uncontrolled		
Rights:	Include			Include			Include			Include		
Lanes:	0 0	0 0	0	0 0	1! 0	0	0 1	0 0	0	0 0	0 1	0
Volume Module:												
Base Vol:	0	0	0	1	0	4	4	173	0	0	103	1
Growth Adj:	1.00	1.00	1.00	1.00	1.00	1.00	1.00	1.00	1.00	1.00	1.00	1.00
Initial Bse:	0	0	0	1	0	4	4	173	0	0	103	1
Added Vol:	0	0	0	0	0	0	0	0	0	0	0	0
PasserByVol:	0	0	0	0	0	0	0	0	0	0	0	0
Initial Fut:	0	0	0	1	0	4	4	173	0	0	103	1
User Adj:	1.00	1.00	1.00	1.00	1.00	1.00	1.00	1.00	1.00	1.00	1.00	1.00
PHF Adj:	0.95	0.95	0.95	0.95	0.95	0.95	0.95	0.95	0.95	0.95	0.95	0.95
PHF Volume:	0	0	0	1	0	4	4	182	0	0	108	1
Reduct Vol:	0	0	0	0	0	0	0	0	0	0	0	0
FinalVolume:	0	0	0	1	0	4	4	182	0	0	108	1
Critical Gap Module:												
Critical Gp:	xxxxx	xxxx	xxxxx	6.4	6.5	6.2	4.1	xxxx	xxxxx	xxxxx	xxxx	xxxxx
FollowUpTim:	xxxxx	xxxx	xxxxx	3.5	4.0	3.3	2.2	xxxx	xxxxx	xxxxx	xxxx	xxxxx
Capacity Module:												
Cnflict Vol:	xxxx	xxxx	xxxxx	299	299	109	109	xxxx	xxxxx	xxxx	xxxx	xxxxx
Potent Cap.:	xxxx	xxxx	xxxxx	692	613	945	1481	xxxx	xxxxx	xxxx	xxxx	xxxxx
Move Cap.:	xxxx	xxxx	xxxxx	690	611	945	1481	xxxx	xxxxx	xxxx	xxxx	xxxxx
Volume/Cap:	xxxx	xxxx	xxxx	0.00	0.00	0.00	0.00	xxxx	xxxx	xxxx	xxxx	xxxx
Level of Service Module:												
2Way95thQ:	xxxx	xxxx	xxxxx	xxxx	xxxx	xxxxx	0.0	xxxx	xxxxx	xxxx	xxxx	xxxxx
Control Del:	xxxxx	xxxx	xxxxx	xxxxx	xxxx	xxxxx	7.4	xxxx	xxxxx	xxxxx	xxxx	xxxxx
LOS by Move:	*	*	*	*	*	*	A	*	*	*	*	*
Movement:	LT -	LTR -	RT	LT -	LTR -	RT	LT -	LTR -	RT	LT -	LTR -	RT
Shared Cap.:	xxxx	xxxx	xxxxx	xxxx	880	xxxxx	xxxx	xxxx	xxxxx	xxxx	xxxx	xxxxx
SharedQueue:	xxxxx	xxxx	xxxxx	xxxxx	0.0	xxxxx	0.0	xxxx	xxxxx	xxxxx	xxxx	xxxxx
Shrd ConDel:	xxxxx	xxxx	xxxxx	xxxxx	9.1	xxxxx	7.4	xxxx	xxxxx	xxxxx	xxxx	xxxxx
Shared LOS:	*	*	*	*	A	*	A	*	*	*	*	*
ApproachDel:	xxxxxx			9.1			xxxxxx			xxxxxx		
ApproachLOS:	*			A			*			*		

Note: Queue reported is the number of cars per lane.

Level Of Service Computation Report
2000 HCM Unsignalized Method (Future Volume Alternative)

Intersection #219 SR76 & E. Pala Mission Rd

Average Delay (sec/veh): 3.5 Worst Case Level Of Service: B[12.5]

Street Name:	E. Pala Mission Rd									SR76						
Approach:	North Bound				South Bound				East Bound				West Bound			
Movement:	L	-	T	- R	L	-	T	- R	L	-	T	- R	L	-	T	- R
Control:	Stop Sign				Stop Sign				Uncontrolled				Uncontrolled			
Rights:	Include				Include				Include				Include			
Lanes:	0 0	0	0	0	0 0	1!	0	0	0 1	0	0	0	0 0	0	1	0
Volume Module:																
Base Vol:	0	0	0	136	0	3			6	173	0		0	88	106	
Growth Adj:	1.00	1.00	1.00	1.00	1.00	1.00			1.00	1.00	1.00		1.00	1.00	1.00	
Initial Bse:	0	0	0	136	0	3			6	173	0		0	88	106	
Added Vol:	0	0	0	0	0	0			0	0	0		0	0	0	
PasserByVol:	0	0	0	0	0	0			0	0	0		0	0	0	
Initial Fut:	0	0	0	136	0	3			6	173	0		0	88	106	
User Adj:	1.00	1.00	1.00	1.00	1.00	1.00			1.00	1.00	1.00		1.00	1.00	1.00	
PHF Adj:	0.95	0.95	0.95	0.95	0.95	0.95			0.95	0.95	0.95		0.95	0.95	0.95	
PHF Volume:	0	0	0	143	0	3			6	182	0		0	93	112	
Reduct Vol:	0	0	0	0	0	0			0	0	0		0	0	0	
FinalVolume:	0	0	0	143	0	3			6	182	0		0	93	112	
Critical Gap Module:																
Critical Gp:	xxxxx	xxxx	xxxxx	6.4	6.5	6.2			4.1	xxxx	xxxxx	xxxxx	xxxx	xxxxx		
FollowUpTim:	xxxxx	xxxx	xxxxx	3.5	4.0	3.3			2.2	xxxx	xxxxx	xxxxx	xxxx	xxxxx		
Capacity Module:																
Cnflict Vol:	xxxx	xxxx	xxxxx	363	363	168			214	xxxx	xxxxx	xxxx	xxxx	xxxxx		
Potent Cap.:	xxxx	xxxx	xxxxx	636	565	876			1356	xxxx	xxxxx	xxxx	xxxx	xxxxx		
Move Cap.:	xxxx	xxxx	xxxxx	623	553	861			1345	xxxx	xxxxx	xxxx	xxxx	xxxxx		
Volume/Cap:	xxxx	xxxx	xxxx	0.23	0.00	0.00			0.00	xxxx	xxxx	xxxx	xxxx	xxxx		
Level Of Service Module:																
2Way95thQ:	xxxx	xxxx	xxxxx	xxxx	xxxx	xxxxx			0.0	xxxx	xxxxx	xxxx	xxxx	xxxxx		
Control Del:	xxxxx	xxxx	xxxxx	xxxxx	xxxx	xxxxx			7.7	xxxx	xxxxx	xxxxx	xxxx	xxxxx		
LOS by Move:	*	*	*	*	*	*			A	*	*	*	*	*		
Movement:	LT - LTR - RT				LT - LTR - RT				LT - LTR - RT				LT - LTR - RT			
Shared Cap.:	xxxx	xxxx	xxxxx	xxxx	627	xxxxx			xxxx	xxxx	xxxxx	xxxx	xxxx	xxxxx		
SharedQueue:	xxxxx	xxxx	xxxxx	xxxxx	0.9	xxxxx			0.0	xxxx	xxxxx	xxxxx	xxxx	xxxxx		
Shrd ConDel:	xxxxx	xxxx	xxxxx	xxxxx	12.5	xxxxx			7.7	xxxx	xxxxx	xxxxx	xxxx	xxxxx		
Shared LOS:	*	*	*	*	B	*			A	*	*	*	*	*		
ApproachDel:	xxxxxx				12.5				xxxxxx			xxxxxx				
ApproachLOS:	*				B				*			*				

Note: Queue reported is the number of cars per lane.

Level Of Service Computation Report
2000 HCM Unsignalized Method (Future Volume Alternative)

Intersection #220 SR76 & Lilac Rd

Average Delay (sec/veh): 0.4 Worst Case Level Of Service: B[11.8]

Street Name:	Lilac Rd									SR76						
Approach:	North Bound				South Bound				East Bound				West Bound			
Movement:	L	-	T	- R	L	-	T	- R	L	-	T	- R	L	-	T	- R
Control:	Stop Sign				Stop Sign				Uncontrolled				Uncontrolled			
Rights:	Include				Include				Include				Include			
Lanes:	0 0	1!	0	0	0 0	0	0	0	0 0	0	0	1	0 0	1	0	0
Volume Module:																
Base Vol:	14	0	4		0	0	0		0	306	7		2	181	0	
Growth Adj:	1.00	1.00	1.00		1.00	1.00	1.00		1.00	1.00	1.00		1.00	1.00	1.00	
Initial Bse:	14	0	4		0	0	0		0	306	7		2	181	0	
Added Vol:	0	0	0		0	0	0		0	0	0		0	0	0	
PasserByVol:	0	0	0		0	0	0		0	0	0		0	0	0	
Initial Fut:	14	0	4		0	0	0		0	306	7		2	181	0	
User Adj:	1.00	1.00	1.00		1.00	1.00	1.00		1.00	1.00	1.00		1.00	1.00	1.00	
PHF Adj:	0.95	0.95	0.95		0.95	0.95	0.95		0.95	0.95	0.95		0.95	0.95	0.95	
PHF Volume:	15	0	4		0	0	0		0	322	7		2	191	0	
Reduct Vol:	0	0	0		0	0	0		0	0	0		0	0	0	
FinalVolume:	15	0	4		0	0	0		0	322	7		2	191	0	
Critical Gap Module:																
Critical Gp:	6.4	6.5	6.2		xxxxx	xxxx	xxxxx		xxxxx	xxxx	xxxxx		4.1	xxxx	xxxxx	
FollowUpTim:	3.5	4.0	3.3		xxxxx	xxxx	xxxxx		xxxxx	xxxx	xxxxx		2.2	xxxx	xxxxx	
Capacity Module:																
Cnflict Vol:	521	521	326		xxxx	xxxx	xxxxx		xxxx	xxxx	xxxxx		329	xxxx	xxxxx	
Potent Cap.:	516	460	715		xxxx	xxxx	xxxxx		xxxx	xxxx	xxxxx		1230	xxxx	xxxxx	
Move Cap.:	515	459	715		xxxx	xxxx	xxxxx		xxxx	xxxx	xxxxx		1230	xxxx	xxxxx	
Volume/Cap:	0.03	0.00	0.01		xxxx	xxxx	xxxx		xxxx	xxxx	xxxx		0.00	xxxx	xxxx	
Level Of Service Module:																
2Way95thQ:	xxxx	xxxx	xxxxx		xxxx	xxxx	xxxxx		xxxx	xxxx	xxxxx		0.0	xxxx	xxxxx	
Control Del:	xxxxx	xxxx	xxxxx		xxxxx	xxxx	xxxxx		xxxxx	xxxx	xxxxx		7.9	xxxx	xxxxx	
LOS by Move:	*	*	*		*	*	*		*	*	*		A	*	*	
Movement:	LT - LTR - RT				LT - LTR - RT				LT - LTR - RT				LT - LTR - RT			
Shared Cap.:	xxxx	549	xxxxx		xxxx	xxxx	xxxxx		xxxx	xxxx	xxxxx		xxxx	xxxx	xxxxx	
SharedQueue:	xxxxx	0.1	xxxxx		xxxxx	xxxx	xxxxx		xxxxx	xxxx	xxxxx		0.0	xxxx	xxxxx	
Shrd ConDel:	xxxxx	11.8	xxxxx		xxxxx	xxxx	xxxxx		xxxxx	xxxx	xxxxx		7.9	xxxx	xxxxx	
Shared LOS:	*	B	*		*	*	*		*	*	*		A	*	*	
ApproachDel:	11.8				xxxxxx				xxxxxx				xxxxxx			
ApproachLOS:	B				*				*				*			

Note: Queue reported is the number of cars per lane.

Level Of Service Computation Report
2000 HCM Unsignalized Method (Future Volume Alternative)

Intersection #221 SR76 & Adams Dr

Average Delay (sec/veh): 0.2 Worst Case Level Of Service: B[10.1]

Street Name:	Adams Dr						SR76					
Approach:	North Bound			South Bound			East Bound			West Bound		
Movement:	L - T - R			L - T - R			L - T - R			L - T - R		
Control:	Stop Sign			Stop Sign			Uncontrolled			Uncontrolled		
Rights:	Include			Include			Include			Include		
Lanes:	0 0 1! 0 0			0 0 1! 0 0			0 1 0 0 0			0 0 0 1 0		
Volume Module:												
Base Vol:	0	0	0	2	0	6	1	311	0	0	193	1
Growth Adj:	1.00	1.00	1.00	1.00	1.00	1.00	1.00	1.00	1.00	1.00	1.00	1.00
Initial Bse:	0	0	0	2	0	6	1	311	0	0	193	1
Added Vol:	0	0	0	0	0	0	0	0	0	0	0	0
PasserByVol:	0	0	0	0	0	0	0	0	0	0	0	0
Initial Fut:	0	0	0	2	0	6	1	311	0	0	193	1
User Adj:	1.00	1.00	1.00	1.00	1.00	1.00	1.00	1.00	1.00	1.00	1.00	1.00
PHF Adj:	0.95	0.95	0.95	0.95	0.95	0.95	0.95	0.95	0.95	0.95	0.95	0.95
PHF Volume:	0	0	0	2	0	6	1	327	0	0	203	1
Reduct Vol:	0	0	0	0	0	0	0	0	0	0	0	0
FinalVolume:	0	0	0	2	0	6	1	327	0	0	203	1
Critical Gap Module:												
Critical Gp:	7.1	6.5	6.2	6.4	6.5	6.2	4.1	xxxx	xxxxx	xxxxx	xxxx	xxxxx
FollowUpTim:	3.5	4.0	3.3	3.5	4.0	3.3	2.2	xxxx	xxxxx	xxxxx	xxxx	xxxxx
Capacity Module:												
Cnflict Vol:	536	534	327	533	533	204	204	xxxx	xxxxx	xxxx	xxxx	xxxxx
Potent Cap.:	455	452	714	507	453	837	1367	xxxx	xxxxx	xxxx	xxxx	xxxxx
Move Cap.:	451	452	714	507	452	837	1367	xxxx	xxxxx	xxxx	xxxx	xxxxx
Volume/Cap:	0.00	0.00	0.00	0.00	0.00	0.01	0.00	xxxx	xxxx	xxxx	xxxx	xxxx
Level Of Service Module:												
2Way95thQ:	xxxx	xxxx	xxxxx	xxxx	xxxx	xxxxx	0.0	xxxx	xxxxx	xxxx	xxxx	xxxxx
Control Del:	xxxxx	xxxx	xxxxx	xxxxx	xxxx	xxxxx	7.6	xxxx	xxxxx	xxxxx	xxxx	xxxxx
LOS by Move:	*	*	*	*	*	*	A	*	*	*	*	*
Movement:	LT - LTR - RT			LT - LTR - RT			LT - LTR - RT			LT - LTR - RT		
Shared Cap.:	xxxx	0	xxxxx	xxxx	720	xxxxx	xxxx	xxxx	xxxxx	xxxx	xxxx	xxxxx
SharedQueue:	xxxxx	xxxx	xxxxx	xxxxx	0.0	xxxxx	0.0	xxxx	xxxxx	xxxxx	xxxx	xxxxx
Shrd ConDel:	xxxxx	xxxx	xxxxx	xxxxx	10.1	xxxxx	7.6	xxxx	xxxxx	xxxxx	xxxx	xxxxx
Shared LOS:	*	*	*	*	B	*	A	*	*	*	*	*
ApproachDel:	xxxxxx			10.1			xxxxxx			xxxxxx		
ApproachLOS:	*			B			*			*		

Note: Queue reported is the number of cars per lane.

Level Of Service Computation Report
2000 HCM Unsignalized Method (Future Volume Alternative)

Intersection #222 SR76 & Cole Grade Rd

Average Delay (sec/veh): 5.5 Worst Case Level Of Service: C[17.0]

Street Name:	Cole Grade Rd						SR76					
Approach:	North Bound			South Bound			East Bound			West Bound		
Movement:	L - T - R			L - T - R			L - T - R			L - T - R		
Control:	Stop Sign			Stop Sign			Uncontrolled			Uncontrolled		
Rights:	Include			Include			Include			Include		
Lanes:	0 0 1! 0 0			0 0 1 0 0			0 0 0 1 0			0 0 1! 0 0		
Volume Module:												
Base Vol:	123	0	70	0	1	0	0	221	77	52	134	2
Growth Adj:	1.00	1.00	1.00	1.00	1.00	1.00	1.00	1.00	1.00	1.00	1.00	1.00
Initial Bse:	123	0	70	0	1	0	0	221	77	52	134	2
Added Vol:	0	0	0	0	0	0	0	0	0	0	0	0
PasserByVol:	0	0	0	0	0	0	0	0	0	0	0	0
Initial Fut:	123	0	70	0	1	0	0	221	77	52	134	2
User Adj:	1.00	1.00	1.00	1.00	1.00	1.00	1.00	1.00	1.00	1.00	1.00	1.00
PHF Adj:	0.95	0.95	0.95	0.95	0.95	0.95	0.95	0.95	0.95	0.95	0.95	0.95
PHF Volume:	129	0	74	0	1	0	0	233	81	55	141	2
Reduct Vol:	0	0	0	0	0	0	0	0	0	0	0	0
FinalVolume:	129	0	74	0	1	0	0	233	81	55	141	2
Critical Gap Module:												
Critical Gp:	7.1	6.5	6.2	xxxxx	6.5	xxxxx	xxxxx	xxxx	xxxxx	4.1	xxxx	xxxxx
FollowUpTim:	3.5	4.0	3.3	xxxxx	4.0	xxxxx	xxxxx	xxxx	xxxxx	2.2	xxxx	xxxxx
Capacity Module:												
Cnflict Vol:	545	546	293	xxxx	585	xxxxx	xxxx	xxxx	xxxxx	324	xxxx	xxxxx
Potent Cap.:	449	445	746	xxxx	423	xxxxx	xxxx	xxxx	xxxxx	1236	xxxx	xxxxx
Move Cap.:	425	418	734	xxxx	397	xxxxx	xxxx	xxxx	xxxxx	1226	xxxx	xxxxx
Volume/Cap:	0.30	0.00	0.10	xxxx	0.00	xxxx	xxxx	xxxx	xxxx	0.04	xxxx	xxxx
Level Of Service Module:												
2Way95thQ:	xxxx	xxxx	xxxxx	xxxx	0.0	xxxxx	xxxx	xxxx	xxxxx	0.1	xxxx	xxxxx
Control Del:	xxxxx	xxxx	xxxxx	xxxxx	14.1	xxxxx	xxxxx	xxxx	xxxxx	8.1	xxxx	xxxxx
LOS by Move:	*	*	*	*	B	*	*	*	*	A	*	*
Movement:	LT - LTR - RT			LT - LTR - RT			LT - LTR - RT			LT - LTR - RT		
Shared Cap.:	xxxx	502	xxxxx	xxxx	xxxx	xxxxx	xxxx	xxxx	xxxxx	xxxx	xxxx	xxxxx
SharedQueue:	xxxxx	1.9	xxxxx	xxxxx	xxxx	xxxxx	xxxxx	xxxx	xxxxx	xxxxx	xxxx	xxxxx
Shrd ConDel:	xxxxx	17.0	xxxxx	xxxxx	xxxx	xxxxx	xxxxx	xxxx	xxxxx	xxxxx	xxxx	xxxxx
Shared LOS:	*	C	*	*	*	*	*	*	*	*	*	*
ApproachDel:	17.0			14.1			xxxxxx			xxxxxx		
ApproachLOS:	C			B			*			*		

Note: Queue reported is the number of cars per lane.

Scenario Report

Scenario:	Ex PM
Command:	Default Command
Volume:	Ex PM
Geometry:	EX
Impact Fee:	Default Impact Fee
Trip Generation:	None
Trip Distribution:	None
Paths:	Default Path
Routes:	Default Route
Configuration:	Default Configuration

Impact Analysis Report
Level Of Service

Intersection	Base LOS	Base Del/ Veh	Base V/ C	Future LOS	Future Del/ Veh	Future V/ C	Change in
#201 SR76 & Vista Way	E	68.7	1.011	E	68.7	1.011	+ 0.000 D/V
#202 Mission Ave & River Rd	C	34.5	0.869	C	34.5	0.869	+ 0.000 D/V
#203 Mission Rd & Olive Hill Rd	D	40.7	0.937	D	40.7	0.937	+ 0.000 D/V
#204 SR76 & Mission Rd	C	31.9	0.855	C	31.9	0.855	+ 0.000 D/V
#205 SR76 & Gird Rd	B	11.6	0.649	B	11.6	0.649	+ 0.000 D/V
#206 SR76 & Old Hwy 395	C	30.8	0.744	C	30.8	0.744	+ 0.000 D/V
#207 SR76 & I-15 SB Ramps	E	58.8	1.039	E	58.8	1.039	+ 0.000 D/V
#208 SR76 & I-15 NB Ramps	D	51.1	0.957	D	51.1	0.957	+ 0.000 D/V
#209 SR76 & Pankey Rd	B	13.1	0.031	B	13.1	0.031	+ 0.000 D/V
#210 SR76 & Horse Ranch Creek Rd	A	0.0	0.000	A	0.0	0.000	+ 0.000 D/V
#211 SR76 & Rice Cyn Rd	B	13.3	0.027	B	13.3	0.027	+ 0.000 D/V
#212 SR76 & Couser Cyn Rd	B	14.8	0.052	B	14.8	0.052	+ 0.000 D/V
#214 SR76 & C. Drwy	A	0.5	0.199	A	0.5	0.199	+ 0.000 D/V
#216 SR76 & W. Pala Mission Rd	C	27.6	0.324	C	27.6	0.324	+ 0.000 D/V
#217 Pala Mission Rd & Pala Temecul	B	11.2	0.477	B	11.2	0.477	+ 0.000 V/C
#218 SR76 & Brittain Rd	B	10.1	0.003	B	10.1	0.003	+ 0.000 D/V
#219 SR76 & E. Pala Mission Rd	C	16.7	0.366	C	16.7	0.366	+ 0.000 D/V
#220 SR76 & Lilac Rd	B	13.1	0.022	B	13.1	0.022	+ 0.000 D/V
#221 SR76 & Adams Dr	B	13.4	0.014	B	13.4	0.014	+ 0.000 D/V
#222 SR76 & Cole Grade Rd	C	17.9	0.233	C	17.9	0.233	+ 0.000 D/V

Level Of Service Computation Report
2000 HCM Operations Method (Future Volume Alternative)

Intersection #201 SR76 & Vista Way

Cycle (sec): 120 Critical Vol./Cap.(X): 1.011
Loss Time (sec): 16 Average Delay (sec/veh): 68.7
Optimal Cycle: OPTIMIZED Level Of Service: E

Street Name:	SR76						Vista Way					
Approach:	North Bound			South Bound			East Bound			West Bound		
Movement:	L	T	R	L	T	R	L	T	R	L	T	R
Control:	Protected			Protected			Protected			Protected		
Rights:	Include			Include			Include			Include		
Min. Green:	5	5	5	5	5	5	5	5	5	5	5	5
Y+R:	4.0	4.0	4.0	4.0	4.0	4.0	4.0	4.0	4.0	4.0	4.0	4.0
Lanes:	1 0	1 1	0	2 0	0 1	0	0 0	1! 0	0	0 1	0 0	1
Volume Module:												
Base Vol:	91	976	224	494	727	20	4	57	62	231	75	425
Growth Adj:	1.00	1.00	1.00	1.00	1.00	1.00	1.00	1.00	1.00	1.00	1.00	1.00
Initial Bse:	91	976	224	494	727	20	4	57	62	231	75	425
Added Vol:	0	0	0	0	0	0	0	0	0	0	0	0
PasserByVol:	0	0	0	0	0	0	0	0	0	0	0	0
Initial Fut:	91	976	224	494	727	20	4	57	62	231	75	425
User Adj:	1.00	1.00	1.00	1.00	1.00	1.00	1.00	1.00	1.00	1.00	1.00	1.00
PHF Adj:	0.95	0.95	0.95	0.95	0.95	0.95	0.95	0.95	0.95	0.95	0.95	0.95
PHF Volume:	96	1027	236	520	765	21	4	60	65	243	79	447
Reduct Vol:	0	0	0	0	0	0	0	0	0	0	0	0
Reduced Vol:	96	1027	236	520	765	21	4	60	65	243	79	447
PCE Adj:	1.00	1.00	1.00	1.00	1.00	1.00	1.00	1.00	1.00	1.00	1.00	1.00
MLF Adj:	1.00	1.00	1.00	1.00	1.00	1.00	1.00	1.00	1.00	1.00	1.00	1.00
FinalVolume:	96	1027	236	520	765	21	4	60	65	243	79	447
Saturation Flow Module:												
Sat/Lane:	1900	1900	1900	1900	1900	1900	1900	1900	1900	1900	1900	1900
Adjustment:	0.93	0.90	0.90	0.90	0.98	0.98	0.91	0.91	0.91	0.94	0.94	0.83
Lanes:	1.00	1.63	0.37	2.00	0.97	0.03	0.03	0.46	0.51	0.75	0.25	1.00
Final Sat.:	1769	2797	642	3432	1805	50	56	803	873	1355	440	1583
Capacity Analysis Module:												
Vol/Sat:	0.05	0.37	0.37	0.15	0.42	0.42	0.07	0.07	0.07	0.18	0.18	0.28
Crit Moves:		****		****			****					****
Green/Cycle:	0.06	0.36	0.36	0.15	0.46	0.46	0.07	0.10	0.10	0.25	0.28	0.28
Volume/Cap:	0.93	1.01	1.01	1.01	0.93	0.93	1.01	0.72	0.72	0.72	0.64	1.01
Uniform Del:	56.3	38.2	38.2	51.0	30.9	30.9	55.6	52.1	52.1	41.2	38.0	43.2
IncremntDel:	67.0	28.2	28.2	42.5	16.8	16.8	82.5	13.1	13.1	5.6	2.8	45.6
InitQueuDel:	0.0	0.0	0.0	0.0	0.0	0.0	0.0	0.0	0.0	0.0	0.0	0.0
Delay Adj:	1.00	1.00	1.00	1.00	1.00	1.00	1.00	1.00	1.00	1.00	1.00	1.00
Delay/Veh:	123.2	66.4	66.4	93.5	47.7	47.7	138.1	65.2	65.2	46.8	40.8	88.8
User DelAdj:	1.00	1.00	1.00	1.00	1.00	1.00	1.00	1.00	1.00	1.00	1.00	1.00
AdjDel/Veh:	123.2	66.4	66.4	93.5	47.7	47.7	138.1	65.2	65.2	46.8	40.8	88.8
LOS by Move:	F	E	E	F	D	D	F	E	E	D	D	F
HCM2k95thQ:	12	51	51	26	51	51	16	12	12	22	20	38

Level Of Service Computation Report
2000 HCM Operations Method (Future Volume Alternative)

Intersection #202 Mission Ave & River Rd

Cycle (sec): 135 Critical Vol./Cap.(X): 0.869
Loss Time (sec): 16 Average Delay (sec/veh): 34.5
Optimal Cycle: OPTIMIZED Level Of Service: C

Street Name:	SR76						River Rd					
Approach:	North Bound			South Bound			East Bound			West Bound		
Movement:	L	T	R	L	T	R	L	T	R	L	T	R
Control:	Protected			Protected			Protected			Protected		
Rights:	Include			Include			Include			Include		
Min. Green:	5	5	5	5	5	5	5	5	5	5	5	5
Y+R:	4.0	4.0	4.0	4.0	4.0	4.0	4.0	4.0	4.0	4.0	4.0	4.0
Lanes:	1 0	1 0	0	0 0	0 1	0	1 0	0 0	1	0 0	0 0	0
Volume Module:												
Base Vol:	49	1082	0	0	883	106	259	0	128	0	0	0
Growth Adj:	1.00	1.00	1.00	1.00	1.00	1.00	1.00	1.00	1.00	1.00	1.00	1.00
Initial Bse:	49	1082	0	0	883	106	259	0	128	0	0	0
Added Vol:	0	0	0	0	0	0	0	0	0	0	0	0
PasserByVol:	0	0	0	0	0	0	0	0	0	0	0	0
Initial Fut:	49	1082	0	0	883	106	259	0	128	0	0	0
User Adj:	1.00	1.00	1.00	1.00	1.00	1.00	1.00	1.00	1.00	1.00	1.00	1.00
PHF Adj:	0.95	0.95	0.95	0.95	0.95	0.95	0.95	0.95	0.95	0.95	0.95	0.95
PHF Volume:	52	1139	0	0	929	112	273	0	135	0	0	0
Reduct Vol:	0	0	0	0	0	0	0	0	0	0	0	0
Reduced Vol:	52	1139	0	0	929	112	273	0	135	0	0	0
PCE Adj:	1.00	1.00	1.00	1.00	1.00	1.00	1.00	1.00	1.00	1.00	1.00	1.00
MLF Adj:	1.00	1.00	1.00	1.00	1.00	1.00	1.00	1.00	1.00	1.00	1.00	1.00
FinalVolume:	52	1139	0	0	929	112	273	0	135	0	0	0
Saturation Flow Module:												
Sat/Lane:	1900	1900	1900	1900	1900	1900	1900	1900	1900	1900	1900	1900
Adjustment:	0.93	0.98	1.00	1.00	0.97	0.97	0.93	1.00	0.83	1.00	1.00	1.00
Lanes:	1.00	1.00	0.00	0.00	0.89	0.11	1.00	0.00	1.00	0.00	0.00	0.00
Final Sat.:	1769	1862	0	0	1639	197	1769	0	1583	0	0	0
Capacity Analysis Module:												
Vol/Sat:	0.03	0.61	0.00	0.00	0.57	0.57	0.15	0.00	0.09	0.00	0.00	0.00
Crit Moves:		****		****			****					
Green/Cycle:	0.04	0.67	0.00	0.00	0.67	0.67	0.17	0.00	0.14	0.00	0.00	0.00
Volume/Cap:	0.67	0.91	0.00	0.00	0.85	0.85	0.91	0.00	0.59	0.00	0.00	0.00
Uniform Del:	63.6	18.4	0.0	0.0	17.2	17.2	55.0	0.0	54.0	0.0	0.0	0.0
IncremntDel:	20.3	9.7	0.0	0.0	5.8	5.8	29.2	0.0	4.0	0.0	0.0	0.0
InitQueuDel:	0.0	0.0	0.0	0.0	0.0	0.0	0.0	0.0	0.0	0.0	0.0	0.0
Delay Adj:	1.00	1.00	0.00	0.00	1.00	1.00	1.00	0.00	1.00	0.00	0.00	0.00
Delay/Veh:	83.9	28.1	0.0	0.0	23.0	23.0	84.2	0.0	58.1	0.0	0.0	0.0
User DelAdj:	1.00	1.00	1.00	1.00	1.00	1.00	1.00	1.00	1.00	1.00	1.00	1.00
AdjDel/Veh:	83.9	28.1	0.0	0.0	23.0	23.0	84.2	0.0	58.1	0.0	0.0	0.0
LOS by Move:	F	C	A	A	C	C	F	A	E	A	A	A
HCM2k95thQ:	7	66	0	0	55	55	25	0	12	0	0	0

Level Of Service Computation Report
2000 HCM Operations Method (Future Volume Alternative)

Intersection #203 Mission Rd & Olive Hill Rd

Cycle (sec): 100 Critical Vol./Cap.(X): 0.937
Loss Time (sec): 16 Average Delay (sec/veh): 40.7
Optimal Cycle: OPTIMIZED Level Of Service: D

Street Name:	SR76									Olive Hill Rd		
Approach:	North Bound			South Bound			East Bound			West Bound		
Movement:	L	T	R	L	T	R	L	T	R	L	T	R
Control:	Protected			Protected			Protected			Protected		
Rights:	Include			Include			Include			Include		
Min. Green:	5	5	5	5	5	5	5	5	5	5	5	5
Y+R:	4.0	4.0	4.0	4.0	4.0	4.0	4.0	4.0	4.0	4.0	4.0	4.0
Lanes:	1 0	1 1	0	1 0	2 0	1	1 0	1 0	1	0 1	0 0	1
Volume Module:												
Base Vol:	83	1347	50	235	889	52	125	56	51	47	73	233
Growth Adj:	1.00	1.00	1.00	1.00	1.00	1.00	1.00	1.00	1.00	1.00	1.00	1.00
Initial Bse:	83	1347	50	235	889	52	125	56	51	47	73	233
Added Vol:	0	0	0	0	0	0	0	0	0	0	0	0
PasserByVol:	0	0	0	0	0	0	0	0	0	0	0	0
Initial Fut:	83	1347	50	235	889	52	125	56	51	47	73	233
User Adj:	1.00	1.00	1.00	1.00	1.00	1.00	1.00	1.00	1.00	1.00	1.00	1.00
PHF Adj:	0.95	0.95	0.95	0.95	0.95	0.95	0.95	0.95	0.95	0.95	0.95	0.95
PHF Volume:	87	1418	53	247	936	55	132	59	54	49	77	245
Reduct Vol:	0	0	0	0	0	0	0	0	0	0	0	0
Reduced Vol:	87	1418	53	247	936	55	132	59	54	49	77	245
PCE Adj:	1.00	1.00	1.00	1.00	1.00	1.00	1.00	1.00	1.00	1.00	1.00	1.00
MLF Adj:	1.00	1.00	1.00	1.00	1.00	1.00	1.00	1.00	1.00	1.00	1.00	1.00
FinalVolume:	87	1418	53	247	936	55	132	59	54	49	77	245
Saturation Flow Module:												
Sat/Lane:	1900	1900	1900	1900	1900	1900	1900	1900	1900	1900	1900	1900
Adjustment:	0.93	0.93	0.93	0.93	0.93	0.83	0.93	0.98	0.83	0.96	0.96	0.83
Lanes:	1.00	1.93	0.07	1.00	2.00	1.00	1.00	1.00	1.00	0.39	0.61	1.00
Final Sat.:	1769	3394	126	1769	3538	1583	1769	1862	1583	715	1111	1583
Capacity Analysis Module:												
Vol/Sat:	0.05	0.42	0.42	0.14	0.26	0.03	0.07	0.03	0.03	0.07	0.07	0.15
Crit Moves:		****		****			****					****
Green/Cycle:	0.09	0.45	0.45	0.15	0.50	0.50	0.08	0.10	0.10	0.14	0.17	0.17
Volume/Cap:	0.52	0.94	0.94	0.94	0.53	0.07	0.94	0.31	0.33	0.49	0.42	0.94
Uniform Del:	43.1	26.4	26.4	42.1	17.0	12.9	45.8	41.6	41.7	39.5	37.4	41.2
IncremntDel:	3.0	11.0	11.0	38.6	0.3	0.0	56.9	0.9	1.2	1.4	0.9	38.8
InitQueuDel:	0.0	0.0	0.0	0.0	0.0	0.0	0.0	0.0	0.0	0.0	0.0	0.0
Delay Adj:	1.00	1.00	1.00	1.00	1.00	1.00	1.00	1.00	1.00	1.00	1.00	1.00
Delay/Veh:	46.1	37.4	37.4	80.6	17.3	13.0	102.7	42.5	42.9	41.0	38.4	80.0
User DelAdj:	1.00	1.00	1.00	1.00	1.00	1.00	1.00	1.00	1.00	1.00	1.00	1.00
AdjDel/Veh:	46.1	37.4	37.4	80.6	17.3	13.0	102.7	42.5	42.9	41.0	38.4	80.0
LOS by Move:	D	D	D	F	B	B	F	D	D	D	D	E
HCM2k95thQ:	7	45	45	21	19	2	14	4	4	8	8	21

Level Of Service Computation Report
2000 HCM Operations Method (Future Volume Alternative)

Intersection #204 SR76 & Mission Rd

Cycle (sec): 90 Critical Vol./Cap.(X): 0.855
Loss Time (sec): 12 Average Delay (sec/veh): 31.9
Optimal Cycle: OPTIMIZED Level Of Service: C

Street Name:	Mission Rd						SR76					
Approach:	North Bound			South Bound			East Bound			West Bound		
Movement:	L	T	R	L	T	R	L	T	R	L	T	R
Control:	Split Phase			Split Phase			Protected			Protected		
Rights:	Include			Include			Include			Include		
Min. Green:	5	5	5	5	5	5	5	5	5	5	5	5
Y+R:	4.0	4.0	4.0	4.0	4.0	4.0	4.0	4.0	4.0	4.0	4.0	4.0
Lanes:	0 0	0 0	0	2 0	0 0	2	2 0	1 0	0	0 0	2 0	1
Volume Module: >> Count Date: 25 Oct 2006 <<												
Base Vol:	0	0	0	132	0	548	732	944	0	0	638	117
Growth Adj:	1.00	1.00	1.00	1.00	1.00	1.00	1.00	1.00	1.00	1.00	1.00	1.00
Initial Bse:	0	0	0	132	0	548	732	944	0	0	638	117
Added Vol:	0	0	0	0	0	0	0	0	0	0	0	0
PasserByVol:	0	0	0	0	0	0	0	0	0	0	0	0
Initial Fut:	0	0	0	132	0	548	732	944	0	0	638	117
User Adj:	1.00	1.00	1.00	1.00	1.00	1.00	1.00	1.00	1.00	1.00	1.00	1.00
PHF Adj:	0.95	0.95	0.95	0.95	0.95	0.95	0.95	0.95	0.95	0.95	0.95	0.95
PHF Volume:	0	0	0	139	0	577	771	994	0	0	672	123
Reduct Vol:	0	0	0	0	0	0	0	0	0	0	0	0
Reduced Vol:	0	0	0	139	0	577	771	994	0	0	672	123
PCE Adj:	1.00	1.00	1.00	1.00	1.00	1.00	1.00	1.00	1.00	1.00	1.00	1.00
MLF Adj:	1.00	1.00	1.00	1.00	1.00	1.00	1.00	1.00	1.00	1.00	1.00	1.00
FinalVolume:	0	0	0	139	0	577	771	994	0	0	672	123
Saturation Flow Module:												
Sat/Lane:	1900	1900	1900	1900	1900	1900	1900	1900	1900	1900	1900	1900
Adjustment:	1.00	1.00	1.00	0.90	1.00	0.73	0.90	0.98	1.00	1.00	0.93	0.83
Lanes:	0.00	0.00	0.00	2.00	0.00	2.00	2.00	1.00	0.00	0.00	2.00	1.00
Final Sat.:	0	0	0	3432	0	2786	3432	1862	0	0	3538	1583
Capacity Analysis Module:												
Vol/Sat:	0.00	0.00	0.00	0.04	0.00	0.21	0.22	0.53	0.00	0.00	0.19	0.08
Crit Moves:						****		****		****		
Green/Cycle:	0.00	0.00	0.00	0.23	0.00	0.23	0.35	0.58	0.00	0.00	0.29	0.29
Volume/Cap:	0.00	0.00	0.00	0.18	0.00	0.91	0.65	0.91	0.00	0.00	0.65	0.27
Uniform Del:	0.0	0.0	0.0	28.0	0.0	33.9	24.8	16.7	0.0	0.0	27.8	24.4
IncremntDel:	0.0	0.0	0.0	0.1	0.0	17.8	1.3	11.6	0.0	0.0	1.4	0.3
InitQueuDel:	0.0	0.0	0.0	0.0	0.0	0.0	0.0	0.0	0.0	0.0	0.0	0.0
Delay Adj:	0.00	0.00	0.00	1.00	0.00	1.00	1.00	1.00	0.00	0.00	1.00	1.00
Delay/Veh:	0.0	0.0	0.0	28.2	0.0	51.7	26.0	28.2	0.0	0.0	29.2	24.7
User DelAdj:	1.00	1.00	1.00	1.00	1.00	1.00	1.00	1.00	1.00	1.00	1.00	1.00
AdjDel/Veh:	0.0	0.0	0.0	28.2	0.0	51.7	26.0	28.2	0.0	0.0	29.2	24.7
LOS by Move:	A	A	A	C	A	D	C	C	A	A	C	C
HCM2k95thQ:	0	0	0	3	0	23	19	47	0	0	17	5

Level Of Service Computation Report
2000 HCM Operations Method (Future Volume Alternative)

Intersection #205 SR76 & Gird Rd

Cycle (sec): 90 Critical Vol./Cap.(X): 0.649
Loss Time (sec): 12 Average Delay (sec/veh): 11.6
Optimal Cycle: OPTIMIZED Level Of Service: B

Street Name:	Gird Rd						SR76					
Approach:	North Bound			South Bound			East Bound			West Bound		
Movement:	L	T	R	L	T	R	L	T	R	L	T	R
Control:	Split Phase			Split Phase			Protected			Protected		
Rights:	Include			Include			Include			Include		
Min. Green:	5	5	5	5	5	5	5	5	5	5	5	5
Y+R:	4.0	4.0	4.0	4.0	4.0	4.0	4.0	4.0	4.0	4.0	4.0	4.0
Lanes:	0 0	0	0 0	1 0	0	0 1	1 0	1	0 0	0 0	1	0 1
Volume Module: >> Count Date: 18 Oct 2006 << PM Peak												
Base Vol:	0	0	0	37	0	59	103	956	0	0	674	59
Growth Adj:	1.00	1.00	1.00	1.00	1.00	1.00	1.00	1.00	1.00	1.00	1.00	1.00
Initial Bse:	0	0	0	37	0	59	103	956	0	0	674	59
Added Vol:	0	0	0	0	0	0	0	0	0	0	0	0
PasserByVol:	0	0	0	0	0	0	0	0	0	0	0	0
Initial Fut:	0	0	0	37	0	59	103	956	0	0	674	59
User Adj:	1.00	1.00	1.00	1.00	1.00	1.00	1.00	1.00	1.00	1.00	1.00	1.00
PHF Adj:	0.95	0.95	0.95	0.95	0.95	0.95	0.95	0.95	0.95	0.95	0.95	0.95
PHF Volume:	0	0	0	39	0	62	108	1006	0	0	709	62
Reduct Vol:	0	0	0	0	0	0	0	0	0	0	0	0
Reduced Vol:	0	0	0	39	0	62	108	1006	0	0	709	62
PCE Adj:	1.00	1.00	1.00	1.00	1.00	1.00	1.00	1.00	1.00	1.00	1.00	1.00
MLF Adj:	1.00	1.00	1.00	1.00	1.00	1.00	1.00	1.00	1.00	1.00	1.00	1.00
FinalVolume:	0	0	0	39	0	62	108	1006	0	0	709	62
Saturation Flow Module:												
Sat/Lane:	1900	1900	1900	1900	1900	1900	1900	1900	1900	1900	1900	1900
Adjustment:	1.00	1.00	1.00	0.93	1.00	0.83	0.93	0.98	1.00	1.00	0.98	0.83
Lanes:	0.00	0.00	0.00	1.00	0.00	1.00	1.00	1.00	0.00	0.00	1.00	1.00
Final Sat.:	0	0	0	1769	0	1583	1769	1862	0	0	1862	1583
Capacity Analysis Module:												
Vol/Sat:	0.00	0.00	0.00	0.02	0.00	0.04	0.06	0.54	0.00	0.00	0.38	0.04
Crit Moves:				****				****		****		
Green/Cycle:	0.00	0.00	0.00	0.06	0.00	0.06	0.11	0.75	0.00	0.00	0.69	0.69
Volume/Cap:	0.00	0.00	0.00	0.36	0.00	0.65	0.55	0.72	0.00	0.00	0.55	0.06
Uniform Del:	0.0	0.0	0.0	40.6	0.0	41.3	37.8	6.1	0.0	0.0	6.8	4.4
IncremntDel:	0.0	0.0	0.0	2.1	0.0	14.6	3.2	1.9	0.0	0.0	0.5	0.0
InitQueuDel:	0.0	0.0	0.0	0.0	0.0	0.0	0.0	0.0	0.0	0.0	0.0	0.0
Delay Adj:	0.00	0.00	0.00	1.00	0.00	1.00	1.00	1.00	0.00	0.00	1.00	1.00
Delay/Veh:	0.0	0.0	0.0	42.7	0.0	55.9	41.1	7.9	0.0	0.0	7.3	4.4
User DelAdj:	1.00	1.00	1.00	1.00	1.00	1.00	1.00	1.00	1.00	1.00	1.00	1.00
AdjDel/Veh:	0.0	0.0	0.0	42.7	0.0	55.9	41.1	7.9	0.0	0.0	7.3	4.4
LOS by Move:	A	A	A	D	A	E	D	A	A	A	A	A
HCM2k95thQ:	0	0	0	3	0	6	7	28	0	0	18	1

Level Of Service Computation Report
2000 HCM Operations Method (Future Volume Alternative)

Intersection #206 SR76 & Old Hwy 395

Cycle (sec): 90 Critical Vol./Cap.(X): 0.744
Loss Time (sec): 16 Average Delay (sec/veh): 30.8
Optimal Cycle: OPTIMIZED Level Of Service: C

Street Name:	Old Hwy 395						SR76					
Approach:	North Bound			South Bound			East Bound			West Bound		
Movement:	L	T	R	L	T	R	L	T	R	L	T	R
Control:	Split Phase			Split Phase			Protected			Protected		
Rights:	Include			Include			Include			Include		
Min. Green:	5	5	5	5	5	5	5	5	5	5	5	5
Y+R:	4.0	4.0	4.0	4.0	4.0	4.0	4.0	4.0	4.0	4.0	4.0	4.0
Lanes:	1 0	0	1 0	0 0	1!	0 0	1 0	1	1 0	1 0	2	0 1
Volume Module: >> Count Date: 25 Oct 2006 << PM Peak												
Base Vol:	64	98	38	227	73	56	66	844	73	72	595	233
Growth Adj:	1.00	1.00	1.00	1.00	1.00	1.00	1.00	1.00	1.00	1.00	1.00	1.00
Initial Bse:	64	98	38	227	73	56	66	844	73	72	595	233
Added Vol:	0	0	0	0	0	0	0	0	0	0	0	0
PasserByVol:	0	0	0	0	0	0	0	0	0	0	0	0
Initial Fut:	64	98	38	227	73	56	66	844	73	72	595	233
User Adj:	1.00	1.00	1.00	1.00	1.00	1.00	1.00	1.00	1.00	1.00	1.00	1.00
PHF Adj:	0.95	0.95	0.95	0.95	0.95	0.95	0.95	0.95	0.95	0.95	0.95	0.95
PHF Volume:	67	103	40	239	77	59	69	888	77	76	626	245
Reduct Vol:	0	0	0	0	0	0	0	0	0	0	0	0
Reduced Vol:	67	103	40	239	77	59	69	888	77	76	626	245
PCE Adj:	1.00	1.00	1.00	1.00	1.00	1.00	1.00	1.00	1.00	1.00	1.00	1.00
MLF Adj:	1.00	1.00	1.00	1.00	1.00	1.00	1.00	1.00	1.00	1.00	1.00	1.00
FinalVolume:	67	103	40	239	77	59	69	888	77	76	626	245
Saturation Flow Module:												
Sat/Lane:	1900	1900	1900	1900	1900	1900	1900	1900	1900	1900	1900	1900
Adjustment:	0.93	0.94	0.94	0.93	0.93	0.93	0.93	0.92	0.92	0.93	0.93	0.83
Lanes:	1.00	0.72	0.28	0.64	0.20	0.16	1.00	1.84	0.16	1.00	2.00	1.00
Final Sat.:	1769	1285	498	1126	362	278	1769	3217	278	1769	3538	1575
Capacity Analysis Module:												
Vol/Sat:	0.04	0.08	0.08	0.21	0.21	0.21	0.04	0.28	0.28	0.04	0.18	0.16
Crit Moves:			****			****		****		****		
Green/Cycle:	0.11	0.11	0.11	0.29	0.29	0.29	0.10	0.37	0.37	0.06	0.33	0.33
Volume/Cap:	0.35	0.74	0.74	0.74	0.74	0.74	0.38	0.74	0.74	0.74	0.54	0.48
Uniform Del:	37.2	38.9	38.9	29.2	29.2	29.2	37.7	24.6	24.6	41.8	24.8	24.2
IncremntDel:	1.1	14.5	14.5	5.9	5.9	5.9	1.4	2.4	2.4	25.3	0.5	0.7
InitQueuDel:	0.0	0.0	0.0	0.0	0.0	0.0	0.0	0.0	0.0	0.0	0.0	0.0
Delay Adj:	1.00	1.00	1.00	1.00	1.00	1.00	1.00	1.00	1.00	1.00	1.00	1.00
Delay/Veh:	38.4	53.4	53.4	35.1	35.1	35.1	39.1	26.9	26.9	67.0	25.3	24.9
User DelAdj:	1.00	1.00	1.00	1.00	1.00	1.00	1.00	1.00	1.00	1.00	1.00	1.00
AdjDel/Veh:	38.4	53.4	53.4	35.1	35.1	35.1	39.1	26.9	26.9	67.0	25.3	24.9
LOS by Move:	D	D	D	D	D	D	D	C	C	E	C	C
HCM2k95thQ:	4	11	11	20	20	20	5	24	24	5	14	10

Level Of Service Computation Report
2000 HCM Operations Method (Future Volume Alternative)

Intersection #207 SR76 & I-15 SB Ramps

Cycle (sec): 110 Critical Vol./Cap.(X): 1.039
Loss Time (sec): 12 Average Delay (sec/veh): 58.8
Optimal Cycle: OPTIMIZED Level Of Service: E

Street Name:	I-15 SB Ramps						SR76					
Approach:	North Bound			South Bound			East Bound			West Bound		
Movement:	L	T	R	L	T	R	L	T	R	L	T	R
Control:	Split Phase			Split Phase			Protected			Protected		
Rights:	Include			Include			Include			Include		
Min. Green:	5	5	5	5	5	5	5	5	5	5	5	5
Y+R:	4.0	4.0	4.0	4.0	4.0	4.0	4.0	4.0	4.0	4.0	4.0	4.0
Lanes:	0 0	0	0 0	0 1	0	0 1	0 0	1	0 1	1 0	1	0 0
Volume Module: >> Count Date: 25 Oct 2006 << PM Peak												
Base Vol:	0	0	0	93	8	500	0	892	290	149	524	0
Growth Adj:	1.00	1.00	1.00	1.00	1.00	1.00	1.00	1.00	1.00	1.00	1.00	1.00
Initial Bse:	0	0	0	93	8	500	0	892	290	149	524	0
Added Vol:	0	0	0	0	0	0	0	0	0	0	0	0
PasserByVol:	0	0	0	0	0	0	0	0	0	0	0	0
Initial Fut:	0	0	0	93	8	500	0	892	290	149	524	0
User Adj:	1.00	1.00	1.00	1.00	1.00	1.00	1.00	1.00	1.00	1.00	1.00	1.00
PHF Adj:	0.95	0.95	0.95	0.95	0.95	0.95	0.95	0.95	0.95	0.95	0.95	0.95
PHF Volume:	0	0	0	98	8	526	0	939	305	157	552	0
Reduct Vol:	0	0	0	0	0	0	0	0	0	0	0	0
Reduced Vol:	0	0	0	98	8	526	0	939	305	157	552	0
PCE Adj:	1.00	1.00	1.00	1.00	1.00	1.00	1.00	1.00	1.00	1.00	1.00	1.00
MLF Adj:	1.00	1.00	1.00	1.00	1.00	1.00	1.00	1.00	1.00	1.00	1.00	1.00
FinalVolume:	0	0	0	98	8	526	0	939	305	157	552	0
Saturation Flow Module:												
Sat/Lane:	1900	1900	1900	1900	1900	1900	1900	1900	1900	1900	1900	1900
Adjustment:	1.00	1.00	1.00	0.96	0.96	0.83	1.00	0.98	0.83	0.93	0.98	1.00
Lanes:	0.00	0.00	0.00	0.92	0.08	1.00	0.00	1.00	1.00	1.00	1.00	0.00
Final Sat.:	0	0	0	1675	144	1583	0	1862	1583	1769	1862	0
Capacity Analysis Module:												
Vol/Sat:	0.00	0.00	0.00	0.06	0.06	0.33	0.00	0.50	0.19	0.09	0.30	0.00
Crit Moves:						****		****		****		
Green/Cycle:	0.00	0.00	0.00	0.32	0.32	0.32	0.00	0.49	0.49	0.09	0.49	0.00
Volume/Cap:	0.00	0.00	0.00	0.18	0.18	1.04	0.00	1.04	0.40	1.04	0.60	0.00
Uniform Del:	0.0	0.0	0.0	27.0	27.0	37.4	0.0	28.3	18.0	50.3	19.9	0.0
IncremntDel:	0.0	0.0	0.0	0.2	0.2	50.4	0.0	40.5	0.3	83.9	1.1	0.0
InitQueuDel:	0.0	0.0	0.0	0.0	0.0	0.0	0.0	0.0	0.0	0.0	0.0	0.0
Delay Adj:	0.00	0.00	0.00	1.00	1.00	1.00	0.00	1.00	1.00	1.00	1.00	0.00
Delay/Veh:	0.0	0.0	0.0	27.2	27.2	87.8	0.0	68.8	18.4	134.2	21.0	0.0
User DelAdj:	1.00	1.00	1.00	1.00	1.00	1.00	1.00	1.00	1.00	1.00	1.00	1.00
AdjDel/Veh:	0.0	0.0	0.0	27.2	27.2	87.8	0.0	68.8	18.4	134.2	21.0	0.0
LOS by Move:	A	A	A	C	C	F	A	E	B	F	C	A
HCM2k95thQ:	0	0	0	5	5	42	0	60	12	12	22	0

Level Of Service Computation Report
2000 HCM Operations Method (Future Volume Alternative)

Intersection #208 SR76 & I-15 NB Ramps

Cycle (sec): 95 Critical Vol./Cap.(X): 0.957
Loss Time (sec): 12 Average Delay (sec/veh): 51.1
Optimal Cycle: OPTIMIZED Level Of Service: D

Street Name:	I-15 NB Ramps						SR76					
Approach:	North Bound			South Bound			East Bound			West Bound		
Movement:	L	T	R	L	T	R	L	T	R	L	T	R
Control:	Split Phase			Split Phase			Protected			Protected		
Rights:	Include			Include			Include			Include		
Min. Green:	5	5	5	5	5	5	5	5	5	5	5	5
Y+R:	4.0	4.0	4.0	4.0	4.0	4.0	4.0	4.0	4.0	4.0	4.0	4.0
Lanes:	0 1	0	0 1	0 0	0	0 0	1 0	1	0 0	0 0	1	0 1
Volume Module:PM Peak												
Base Vol:	352	6	162	0	0	0	719	210	0	0	324	92
Growth Adj:	1.00	1.00	1.00	1.00	1.00	1.00	1.00	1.00	1.00	1.00	1.00	1.00
Initial Bse:	352	6	162	0	0	0	719	210	0	0	324	92
Added Vol:	0	0	0	0	0	0	0	0	0	0	0	0
PasserByVol:	0	0	0	0	0	0	0	0	0	0	0	0
Initial Fut:	352	6	162	0	0	0	719	210	0	0	324	92
User Adj:	1.00	1.00	1.00	1.00	1.00	1.00	1.00	1.00	1.00	1.00	1.00	1.00
PHF Adj:	0.95	0.95	0.95	0.95	0.95	0.95	0.95	0.95	0.95	0.95	0.95	0.95
PHF Volume:	371	6	171	0	0	0	757	221	0	0	341	97
Reduct Vol:	0	0	0	0	0	0	0	0	0	0	0	0
Reduced Vol:	371	6	171	0	0	0	757	221	0	0	341	97
PCE Adj:	1.00	1.00	1.00	1.00	1.00	1.00	1.00	1.00	1.00	1.00	1.00	1.00
MLF Adj:	1.00	1.00	1.00	1.00	1.00	1.00	1.00	1.00	1.00	1.00	1.00	1.00
FinalVolume:	371	6	171	0	0	0	757	221	0	0	341	97
Saturation Flow Module:												
Sat/Lane:	1900	1900	1900	1900	1900	1900	1900	1900	1900	1900	1900	1900
Adjustment:	0.88	0.88	0.83	1.00	1.00	1.00	0.93	0.98	1.00	1.00	0.98	0.83
Lanes:	0.98	0.02	1.00	0.00	0.00	0.00	1.00	1.00	0.00	0.00	1.00	1.00
Final Sat.:	1644	28	1583	0	0	0	1769	1862	0	0	1862	1583
Capacity Analysis Module:												
Vol/Sat:	0.23	0.23	0.11	0.00	0.00	0.00	0.43	0.12	0.00	0.00	0.18	0.06
Crit Moves:		****					****				****	
Green/Cycle:	0.24	0.24	0.24	0.00	0.00	0.00	0.45	0.44	0.00	0.00	0.19	0.19
Volume/Cap:	0.96	0.96	0.46	0.00	0.00	0.00	0.96	0.27	0.00	0.00	0.96	0.32
Uniform Del:	35.8	35.8	31.1	0.0	0.0	0.0	25.4	16.8	0.0	0.0	38.0	33.1
IncremntDel:	34.3	34.3	0.9	0.0	0.0	0.0	22.1	0.2	0.0	0.0	36.4	0.6
InitQueuDel:	0.0	0.0	0.0	0.0	0.0	0.0	0.0	0.0	0.0	0.0	0.0	0.0
Delay Adj:	1.00	1.00	1.00	0.00	0.00	0.00	1.00	1.00	0.00	0.00	1.00	1.00
Delay/Veh:	70.1	70.1	32.0	0.0	0.0	0.0	47.5	16.9	0.0	0.0	74.5	33.7
User DelAdj:	1.00	1.00	1.00	1.00	1.00	1.00	1.00	1.00	1.00	1.00	1.00	1.00
AdjDel/Veh:	70.1	70.1	32.0	0.0	0.0	0.0	47.5	16.9	0.0	0.0	74.5	33.7
LOS by Move:	E	E	C	A	A	A	D	B	A	A	E	C
HCM2k95thQ:	28	28	9	0	0	0	34	7	0	0	26	5

Level Of Service Computation Report
2000 HCM Unsignalized Method (Future Volume Alternative)

Intersection #209 SR76 & Pankey Rd

Average Delay (sec/veh): 0.5 Worst Case Level Of Service: B[13.1]

Street Name:	Pankey Rd									SR76					
Approach:	North Bound			South Bound			East Bound			West Bound		
Movement:	L - T - R			L - T - R			L - T - R			L - T - R		
Control:	Stop Sign			Stop Sign			Uncontrolled			Uncontrolled		
Rights:	Include			Include			Include			Include		
Lanes:	0 0 1! 0 0			0 0 1! 0 0			1 0 1 1 0			1 0 1 1 0		
Volume Module: >> Count Date: 25 Oct 2006 <<												
Base Vol:	10	0	9	2	0	5	0	360	32	9	414	1
Growth Adj:	1.00	1.00	1.00	1.00	1.00	1.00	1.00	1.00	1.00	1.00	1.00	1.00
Initial Bse:	10	0	9	2	0	5	0	360	32	9	414	1
Added Vol:	0	0	0	0	0	0	0	0	0	0	0	0
PasserByVol:	0	0	0	0	0	0	0	0	0	0	0	0
Initial Fut:	10	0	9	2	0	5	0	360	32	9	414	1
User Adj:	1.00	1.00	1.00	1.00	1.00	1.00	1.00	1.00	1.00	1.00	1.00	1.00
PHF Adj:	0.95	0.95	0.95	0.95	0.95	0.95	0.95	0.95	0.95	0.95	0.95	0.95
PHF Volume:	11	0	9	2	0	5	0	379	34	9	436	1
Reduct Vol:	0	0	0	0	0	0	0	0	0	0	0	0
FinalVolume:	11	0	9	2	0	5	0	379	34	9	436	1
Critical Gap Module:												
Critical Gp:	7.5	6.5	6.9	7.5	6.5	6.9	xxxxx	xxxx	xxxxx	4.1	xxxx	xxxxx
FollowUpTim:	3.5	4.0	3.3	3.5	4.0	3.3	xxxxx	xxxx	xxxxx	2.2	xxxx	xxxxx
Capacity Module:												
Cnflict Vol:	653	872	226	665	888	238	xxxx	xxxx	xxxxx	423	xxxx	xxxxx
Potent Cap.:	353	288	777	346	281	763	xxxx	xxxx	xxxxx	1133	xxxx	xxxxx
Move Cap.:	342	280	764	334	274	750	xxxx	xxxx	xxxxx	1124	xxxx	xxxxx
Volume/Cap:	0.03	0.00	0.01	0.01	0.00	0.01	xxxx	xxxx	xxxx	0.01	xxxx	xxxx
Level Of Service Module:												
2Way95thQ:	xxxx	xxxx	xxxxx	xxxx	xxxx	xxxxx	xxxx	xxxx	xxxxx	0.0	xxxx	xxxxx
Control Del:	xxxxx	xxxx	xxxxx	xxxxx	xxxx	xxxxx	xxxxx	xxxx	xxxxx	8.2	xxxx	xxxxx
LOS by Move:	*	*	*	*	*	*	*	*	*	A	*	*
Movement:	LT -	LTR -	RT	LT -	LTR -	RT	LT -	LTR -	RT	LT -	LTR -	RT
Shared Cap.:	xxxx	463	xxxxx	xxxx	553	xxxxx	xxxx	xxxx	xxxxx	xxxx	xxxx	xxxxx
SharedQueue:	xxxxx	0.1	xxxxx	xxxxx	0.0	xxxxx	xxxxx	xxxx	xxxxx	xxxxx	xxxx	xxxxx
Shrd ConDel:	xxxxx	13.1	xxxxx	xxxxx	11.6	xxxxx	xxxxx	xxxx	xxxxx	xxxxx	xxxx	xxxxx
Shared LOS:	*	B	*	*	B	*	*	*	*	*	*	*
ApproachDel:	13.1			11.6			xxxxxx			xxxxxx		
ApproachLOS:	B			B			*			*		

Note: Queue reported is the number of cars per lane.

Level Of Service Computation Report
2000 HCM Unsignalized Method (Future Volume Alternative)

Intersection #210 SR76 & Horse Ranch Creek Rd

Average Delay (sec/veh): 0.0 Worst Case Level Of Service: A[0.0]

Street Name:	Horse Ranch Creek Rd									SR76					
Approach:	North Bound			South Bound			East Bound			West Bound		
Movement:	L - T - R			L - T - R			L - T - R			L - T - R		
Control:	Stop Sign			Stop Sign			Uncontrolled			Uncontrolled		
Rights:	Include			Include			Include			Include		
Lanes:	0 0 1! 0 0			0 0 1! 0 0			0 0 1 0 0			0 0 1 0 0		
Volume Module:												
Base Vol:	0	0	0	0	0	0	0	371	0	0	424	0
Growth Adj:	1.00	1.00	1.00	1.00	1.00	1.00	1.00	1.00	1.00	1.00	1.00	1.00
Initial Bse:	0	0	0	0	0	0	0	371	0	0	424	0
Added Vol:	0	0	0	0	0	0	0	0	0	0	0	0
PasserByVol:	0	0	0	0	0	0	0	0	0	0	0	0
Initial Fut:	0	0	0	0	0	0	0	371	0	0	424	0
User Adj:	1.00	1.00	1.00	1.00	1.00	1.00	1.00	1.00	1.00	1.00	1.00	1.00
PHF Adj:	0.95	0.95	0.95	0.95	0.95	0.95	0.95	0.95	0.95	0.95	0.95	0.95
PHF Volume:	0	0	0	0	0	0	0	391	0	0	446	0
Reduct Vol:	0	0	0	0	0	0	0	0	0	0	0	0
FinalVolume:	0	0	0	0	0	0	0	391	0	0	446	0
Critical Gap Module:												
Critical Gp:	6.4	6.5	6.2	6.4	6.5	6.2	xxxxx	xxxx	xxxxx	xxxxx	xxxx	xxxxx
FollowUpTim:	3.5	4.0	3.3	3.5	4.0	3.3	xxxxx	xxxx	xxxxx	xxxxx	xxxx	xxxxx
Capacity Module:												
Cnflict Vol:	837	837	391	837	837	446	xxxx	xxxx	xxxxx	xxxx	xxxx	xxxxx
Potent Cap.:	337	303	658	337	303	612	xxxx	xxxx	xxxxx	xxxx	xxxx	xxxxx
Move Cap.:	337	303	658	337	303	612	xxxx	xxxx	xxxxx	xxxx	xxxx	xxxxx
Volume/Cap:	0.00	0.00	0.00	0.00	0.00	0.00	xxxx	xxxx	xxxx	xxxx	xxxx	xxxx
Level Of Service Module:												
2Way95thQ:	xxxx	xxxx	xxxxx	xxxx	xxxx	xxxxx	xxxx	xxxx	xxxxx	xxxx	xxxx	xxxxx
Control Del:	xxxxx	xxxx	xxxxx	xxxxx	xxxx	xxxxx	xxxxx	xxxx	xxxxx	xxxxx	xxxx	xxxxx
LOS by Move:	*	*	*	*	*	*	*	*	*	*	*	*
Movement:	LT -	LTR -	RT	LT -	LTR -	RT	LT -	LTR -	RT	LT -	LTR -	RT
Shared Cap.:	xxxx	0	xxxxx	xxxx	0	xxxxx	xxxx	xxxx	xxxxx	xxxx	xxxx	xxxxx
SharedQueue:	xxxxx	xxxx	xxxxx	xxxxx	xxxx	xxxxx	xxxxx	xxxx	xxxxx	xxxxx	xxxx	xxxxx
Shrd ConDel:	xxxxx	xxxx	xxxxx	xxxxx	xxxx	xxxxx	xxxxx	xxxx	xxxxx	xxxxx	xxxx	xxxxx
Shared LOS:	*	*	*	*	*	*	*	*	*	*	*	*
ApproachDel:	xxxxxx			xxxxxx			xxxxxx			xxxxxx		
ApproachLOS:	*			*			*			*		

Note: Queue reported is the number of cars per lane.

Level Of Service Computation Report
2000 HCM Unsignalized Method (Future Volume Alternative)

Intersection #211 SR76 & Rice Cyn Rd

Average Delay (sec/veh): 0.6 Worst Case Level Of Service: B[13.3]

Street Name:	Rice Cyn Rd												SR76											
Approach:	North Bound				South Bound				East Bound				West Bound											
Movement:	L	-	T	-	R	L	-	T	-	R	L	-	T	-	R	L	-	T	-	R	L	-	T	-	R
Control:	Stop Sign					Stop Sign					Uncontrolled					Uncontrolled								
Rights:	Include					Include					Include					Include								
Lanes:	0	0	0	0	0	0	0	1!	0	0	0	1	0	0	0	0	0	0	1	0				
Volume Module: >> Count Date: 19 Oct 2006 <<																								
Base Vol:	0	0	0	7	0	15	22	329	0	0	420	17												
Growth Adj:	1.00	1.00	1.00	1.00	1.00	1.00	1.00	1.00	1.00	1.00	1.00	1.00												
Initial Bse:	0	0	0	7	0	15	22	329	0	0	420	17												
Added Vol:	0	0	0	0	0	0	0	0	0	0	0	0												
PasserByVol:	0	0	0	0	0	0	0	0	0	0	0	0												
Initial Fut:	0	0	0	7	0	15	22	329	0	0	420	17												
User Adj:	1.00	1.00	1.00	1.00	1.00	1.00	1.00	1.00	1.00	1.00	1.00	1.00												
PHF Adj:	0.95	0.95	0.95	0.95	0.95	0.95	0.95	0.95	0.95	0.95	0.95	0.95												
PHF Volume:	0	0	0	7	0	16	23	346	0	0	442	18												
Reduct Vol:	0	0	0	0	0	0	0	0	0	0	0	0												
FinalVolume:	0	0	0	7	0	16	23	346	0	0	442	18												
Critical Gap Module:																								
Critical Gp:	xxxxx	xxxx	xxxxx	6.4	6.5	6.2	4.1	xxxx	xxxxx	xxxxx	xxxx	xxxxx												
FollowUpTim:	xxxxx	xxxx	xxxxx	3.5	4.0	3.3	2.2	xxxx	xxxxx	xxxxx	xxxx	xxxxx												
Capacity Module:																								
Cnflict Vol:	xxxx	xxxx	xxxxx	864	864	471	470	xxxx	xxxxx	xxxx	xxxx	xxxxx												
Potent Cap.:	xxxx	xxxx	xxxxx	325	292	593	1092	xxxx	xxxxx	xxxx	xxxx	xxxxx												
Move Cap.:	xxxx	xxxx	xxxxx	314	281	583	1083	xxxx	xxxxx	xxxx	xxxx	xxxxx												
Volume/Cap:	xxxx	xxxx	xxxx	0.02	0.00	0.03	0.02	xxxx	xxxx	xxxx	xxxx	xxxx												
Level Of Service Module:																								
2Way95thQ:	xxxx	xxxx	xxxxx	xxxx	xxxx	xxxxx	0.1	xxxx	xxxxx	xxxx	xxxx	xxxxx												
Control Del:	xxxxx	xxxx	xxxxx	xxxxx	xxxx	xxxxx	8.4	xxxx	xxxxx	xxxxx	xxxx	xxxxx												
LOS by Move:	*	*	*	*	*	*	A	*	*	*	*	*												
Movement:	LT - LTR - RT			LT - LTR - RT			LT - LTR - RT			LT - LTR - RT														
Shared Cap.:	xxxx	xxxx	xxxxx	xxxx	458	xxxxx	xxxx	xxxx	xxxxx	xxxx	xxxx	xxxxx												
SharedQueue:	xxxxx	xxxx	xxxxx	xxxxx	0.2	xxxxx	0.1	xxxx	xxxxx	xxxxx	xxxx	xxxxx												
Shrd ConDel:	xxxxx	xxxx	xxxxx	xxxxx	13.3	xxxxx	8.4	xxxx	xxxxx	xxxxx	xxxx	xxxxx												
Shared LOS:	*	*	*	*	B	*	A	*	*	*	*	*												
ApproachDel:	xxxxxx			13.3			xxxxxx			xxxxxx														
ApproachLOS:	*			B			*			*														

Note: Queue reported is the number of cars per lane.

Level Of Service Computation Report
2000 HCM Unsignalized Method (Future Volume Alternative)

Intersection #212 SR76 & Couser Cyn Rd

Average Delay (sec/veh): 0.5 Worst Case Level Of Service: B[14.8]

Street Name:	Couser Cyn Rd												SR76											
Approach:	North Bound				South Bound				East Bound				West Bound											
Movement:	L	-	T	-	R	L	-	T	-	R	L	-	T	-	R	L	-	T	-	R	L	-	T	-	R
Control:	Stop Sign					Stop Sign					Uncontrolled					Uncontrolled								
Rights:	Include					Include					Include					Include								
Lanes:	0	0	1!	0	0	0	0	1!	0	0	0	0	1	0		0	1	0	0	0				
Volume Module:																								
Base Vol:	16	0	8	0	0	0	0	325	13	10	429	0												
Growth Adj:	1.00	1.00	1.00	1.00	1.00	1.00	1.00	1.00	1.00	1.00	1.00	1.00												
Initial Bse:	16	0	8	0	0	0	0	325	13	10	429	0												
Added Vol:	0	0	0	0	0	0	0	0	0	0	0	0												
PasserByVol:	0	0	0	0	0	0	0	0	0	0	0	0												
Initial Fut:	16	0	8	0	0	0	0	325	13	10	429	0												
User Adj:	1.00	1.00	1.00	1.00	1.00	1.00	1.00	1.00	1.00	1.00	1.00	1.00												
PHF Adj:	0.95	0.95	0.95	0.95	0.95	0.95	0.95	0.95	0.95	0.95	0.95	0.95												
PHF Volume:	17	0	8	0	0	0	0	342	14	11	452	0												
Reduct Vol:	0	0	0	0	0	0	0	0	0	0	0	0												
FinalVolume:	17	0	8	0	0	0	0	342	14	11	452	0												
Critical Gap Module:																								
Critical Gp:	6.4	6.5	6.2	7.1	6.5	6.2	xxxxx	xxxx	xxxxx	4.1	xxxx	xxxxx												
FollowUpTim:	3.5	4.0	3.3	3.5	4.0	3.3	xxxxx	xxxx	xxxxx	2.2	xxxx	xxxxx												
Capacity Module:																								
Cnflict Vol:	842	842	369	846	848	472	xxxx	xxxx	xxxxx	366	xxxx	xxxxx												
Potent Cap.:	335	301	677	282	298	592	xxxx	xxxx	xxxxx	1193	xxxx	xxxxx												
Move Cap.:	327	293	665	272	291	582	xxxx	xxxx	xxxxx	1183	xxxx	xxxxx												
Volume/Cap:	0.05	0.00	0.01	0.00	0.00	0.00	xxxx	xxxx	xxxx	0.01	xxxx	xxxx												
Level Of Service Module:																								
2Way95thQ:	xxxx	xxxx	xxxxx	xxxx	xxxx	xxxxx	xxxx	xxxx	xxxxx	0.0	xxxx	xxxxx												
Control Del:	xxxxx	xxxx	xxxxx	xxxxx	xxxx	xxxxx	xxxxx	xxxx	xxxxx	8.1	xxxx	xxxxx												
LOS by Move:	*	*	*	*	*	*	*	*	*	A	*	*												
Movement:	LT - LTR - RT			LT - LTR - RT			LT - LTR - RT			LT - LTR - RT														
Shared Cap.:	xxxx	394	xxxxx	xxxx	0	xxxxx	xxxx	xxxx	xxxxx	xxxx	xxxx	xxxxx												
SharedQueue:	xxxxx	0.2	xxxxx	xxxxx	xxxx	xxxxx	xxxxx	xxxx	xxxxx	0.0	xxxx	xxxxx												
Shrd ConDel:	xxxxx	14.8	xxxxx	xxxxx	xxxx	xxxxx	xxxxx	xxxx	xxxxx	8.1	xxxx	xxxxx												
Shared LOS:	*	B	*	*	*	*	*	*	*	A	*	*												
ApproachDel:	14.8			xxxxxx			xxxxxx			xxxxxx														
ApproachLOS:	B			*			*			*														

Note: Queue reported is the number of cars per lane.

Level Of Service Computation Report
2000 HCM Operations Method (Future Volume Alternative)

Intersection #214 SR76 & C. Drwy

Cycle (sec): 180 Critical Vol./Cap.(X): 0.199
Loss Time (sec): 12 Average Delay (sec/veh): 0.5
Optimal Cycle: OPTIMIZED Level Of Service: A

Street Name:	C. Drwy									SR76								
Approach:	North Bound			South Bound			East Bound			West Bound		
Movement:	L	- T	- R	L	- T	- R	L	- T	- R	L	- T	- R
Control:	Protected			Protected			Permitted			Permitted		
Rights:	Include			Include			Include			Include		
Min. Green:	5	5	5	5	5	5	5	5	5	5	5	5
Y+R:	4.0	4.0	4.0	4.0	4.0	4.0	4.0	4.0	4.0	4.0	4.0	4.0
Lanes:	0	0	1! 0	0	1	0	0	0	1	1	0	1
Volume Module:												
Base Vol:	0	0	0	0	0	0	0	329	0	0	264	0
Growth Adj:	1.00	1.00	1.00	1.00	1.00	1.00	1.00	1.00	1.00	1.00	1.00	1.00
Initial Bse:	0	0	0	0	0	0	0	329	0	0	264	0
Added Vol:	0	0	0	0	0	0	0	0	0	0	0	0
PasserByVol:	0	0	0	0	0	0	0	0	0	0	0	0
Initial Fut:	0	0	0	0	0	0	0	329	0	0	264	0
User Adj:	1.00	1.00	1.00	1.00	1.00	1.00	1.00	1.00	1.00	1.00	1.00	1.00
PHF Adj:	0.95	0.95	0.95	0.95	0.95	0.95	0.95	0.95	0.95	0.95	0.95	0.95
PHF Volume:	0	0	0	0	0	0	0	346	0	0	278	0
Reduct Vol:	0	0	0	0	0	0	0	0	0	0	0	0
Reduced Vol:	0	0	0	0	0	0	0	346	0	0	278	0
PCE Adj:	1.00	1.00	1.00	1.00	1.00	1.00	1.00	1.00	1.00	1.00	1.00	1.00
MLF Adj:	1.00	1.00	1.00	1.00	1.00	1.00	1.00	1.00	1.00	1.00	1.00	1.00
FinalVolume:	0	0	0	0	0	0	0	346	0	0	278	0
Saturation Flow Module:												
Sat/Lane:	1900	1900	1900	1900	1900	1900	1900	1900	1900	1900	1900	1900
Adjustment:	1.00	1.00	1.00	1.00	1.00	1.00	1.00	0.98	1.00	1.00	0.98	1.00
Lanes:	0.00	1.00	0.00	1.00	0.00	1.00	1.00	1.00	0.00	0.00	1.00	1.00
Final Sat.:	0	1900	0	1900	0	1900	1900	1862	0	0	1862	1900
Capacity Analysis Module:												
Vol/Sat:	0.00	0.00	0.00	0.00	0.00	0.00	0.00	0.19	0.00	0.00	0.15	0.00
Crit Moves:								****				
Green/Cycle:	0.00	0.00	0.00	0.00	0.00	0.00	0.00	0.93	0.00	0.00	0.93	0.00
Volume/Cap:	0.00	0.00	0.00	0.00	0.00	0.00	0.00	0.20	0.00	0.00	0.16	0.00
Uniform Del:	0.0	0.0	0.0	0.0	0.0	0.0	0.0	0.5	0.0	0.0	0.5	0.0
IncremntDel:	0.0	0.0	0.0	0.0	0.0	0.0	0.0	0.1	0.0	0.0	0.0	0.0
InitQueuDel:	0.0	0.0	0.0	0.0	0.0	0.0	0.0	0.0	0.0	0.0	0.0	0.0
Delay Adj:	0.00	0.00	0.00	0.00	0.00	0.00	0.00	1.00	0.00	0.00	1.00	0.00
Delay/Veh:	0.0	0.0	0.0	0.0	0.0	0.0	0.0	0.5	0.0	0.0	0.5	0.0
User DelAdj:	1.00	1.00	1.00	1.00	1.00	1.00	1.00	1.00	1.00	1.00	1.00	1.00
AdjDel/Veh:	0.0	0.0	0.0	0.0	0.0	0.0	0.0	0.5	0.0	0.0	0.5	0.0
LOS by Move:	A	A	A	A	A	A	A	A	A	A	A	A
HCM2k95thQ:	0	0	0	0	0	0	0	3	0	0	3	0

Level Of Service Computation Report
2000 HCM Operations Method (Future Volume Alternative)

Intersection #216 SR76 & W. Pala Mission Rd

Cycle (sec): 90 Critical Vol./Cap.(X): 0.324
Loss Time (sec): 12 Average Delay (sec/veh): 27.6
Optimal Cycle: OPTIMIZED Level Of Service: C

Street Name:	W. Pala Mission Rd									SR76		
Approach:	North Bound			South Bound			East Bound			West Bound		
Movement:	L	- T	- R	L	- T	- R	L	- T	- R	L	- T	- R
Control:	Split Phase			Split Phase			Protected			Protected		
Rights:	Include			Include			Include			Include		
Min. Green:	5	5	5	5	5	5	5	5	5	5	5	5
Y+R:	4.0	4.0	4.0	4.0	4.0	4.0	4.0	4.0	4.0	4.0	4.0	4.0
Lanes:	1	0	0 1	0	0	1	0	0	1	1	0	0 1
Volume Module:												
Base Vol:	15	26	26	22	18	100	148	158	23	26	149	16
Growth Adj:	1.00	1.00	1.00	1.00	1.00	1.00	1.00	1.00	1.00	1.00	1.00	1.00
Initial Bse:	15	26	26	22	18	100	148	158	23	26	149	16
Added Vol:	0	0	0	0	0	0	0	0	0	0	0	0
PasserByVol:	0	0	0	0	0	0	0	0	0	0	0	0
Initial Fut:	15	26	26	22	18	100	148	158	23	26	149	16
User Adj:	1.00	1.00	1.00	1.00	1.00	1.00	1.00	1.00	1.00	1.00	1.00	1.00
PHF Adj:	0.95	0.95	0.95	0.95	0.95	0.95	0.95	0.95	0.95	0.95	0.95	0.95
PHF Volume:	16	27	27	23	19	105	156	166	24	27	157	17
Reduct Vol:	0	0	0	0	0	0	0	0	0	0	0	0
Reduced Vol:	16	27	27	23	19	105	156	166	24	27	157	17
PCE Adj:	1.00	1.00	1.00	1.00	1.00	1.00	1.00	1.00	1.00	1.00	1.00	1.00
MLF Adj:	1.00	1.00	1.00	1.00	1.00	1.00	1.00	1.00	1.00	1.00	1.00	1.00
FinalVolume:	16	27	27	23	19	105	156	166	24	27	157	17
Saturation Flow Module:												
Sat/Lane:	1900	1900	1900	1900	1900	1900	1900	1900	1900	1900	1900	1900
Adjustment:	0.93	0.91	0.91	0.95	0.95	0.83	0.93	0.91	0.91	0.93	0.97	0.97
Lanes:	1.00	0.50	0.50	0.55	0.45	1.00	1.00	1.75	0.25	1.00	0.90	0.10
Final Sat.:	1769	861	861	996	815	1583	1769	3030	441	1769	1656	178
Capacity Analysis Module:												
Vol/Sat:	0.01	0.03	0.03	0.02	0.02	0.07	0.09	0.05	0.05	0.02	0.09	0.09
Crit Moves:		****				****	****				****	
Green/Cycle:	0.10	0.10	0.10	0.21	0.21	0.21	0.27	0.28	0.28	0.28	0.29	0.29
Volume/Cap:	0.09	0.32	0.32	0.11	0.11	0.32	0.32	0.19	0.19	0.05	0.32	0.32
Uniform Del:	36.9	37.8	37.8	29.1	29.1	30.5	26.2	24.6	24.6	23.6	24.9	24.9
IncremntDel:	0.2	1.1	1.1	0.1	0.1	0.6	0.4	0.1	0.1	0.0	0.4	0.4
InitQueuDel:	0.0	0.0	0.0	0.0	0.0	0.0	0.0	0.0	0.0	0.0	0.0	0.0
Delay Adj:	1.00	1.00	1.00	1.00	1.00	1.00	1.00	1.00	1.00	1.00	1.00	1.00
Delay/Veh:	37.2	38.9	38.9	29.2	29.2	31.0	26.6	24.7	24.7	23.6	25.3	25.3
User DelAdj:	1.00	1.00	1.00	1.00	1.00	1.00	1.00	1.00	1.00	1.00	1.00	1.00
AdjDel/Veh:	37.2	38.9	38.9	29.2	29.2	31.0	26.6	24.7	24.7	23.6	25.3	25.3
LOS by Move:	D	D	D	C	C	C	C	C	C	C	C	C
HCM2k95thQ:	1	4	4	2	2	5	7	4	4	1	8	8

Level Of Service Computation Report
2000 HCM 4-Way Stop Method (Future Volume Alternative)

Intersection #217 Pala Mission Rd & Pala Temecula Rd

Cycle (sec): 100 Critical Vol./Cap.(X): 0.477
Loss Time (sec): 0 Average Delay (sec/veh): 11.2
Optimal Cycle: 0 Level Of Service: B

Street Name:	Pala Temecula Rd						Pala Mission Rd					
Approach:	North Bound			South Bound			East Bound			West Bound		
Movement:	L -	T -	R	L -	T -	R	L -	T -	R	L -	T -	R
Control:	Stop Sign			Stop Sign			Stop Sign			Stop Sign		
Rights:	Include			Include			Include			Include		
Min. Green:	5	5	5	5	5	5	5	5	5	5	5	5
Lanes:	0 0	1! 0	0	0 0	1! 0	0	0 0	1! 0	0	0 0	1! 0	0
Volume Module:												
Base Vol:	1	24	3	161	24	119	181	31	3	1	34	247
Growth Adj:	1.00	1.00	1.00	1.00	1.00	1.00	1.00	1.00	1.00	1.00	1.00	1.00
Initial Bse:	1	24	3	161	24	119	181	31	3	1	34	247
Added Vol:	0	0	0	0	0	0	0	0	0	0	0	0
PasserByVol:	0	0	0	0	0	0	0	0	0	0	0	0
Initial Fut:	1	24	3	161	24	119	181	31	3	1	34	247
User Adj:	1.00	1.00	1.00	1.00	1.00	1.00	1.00	1.00	1.00	1.00	1.00	1.00
PHF Adj:	0.95	0.95	0.95	0.95	0.95	0.95	0.95	0.95	0.95	0.95	0.95	0.95
PHF Volume:	1	25	3	169	25	125	191	33	3	1	36	260
Reduct Vol:	0	0	0	0	0	0	0	0	0	0	0	0
Reduced Vol:	1	25	3	169	25	125	191	33	3	1	36	260
PCE Adj:	1.00	1.00	1.00	1.00	1.00	1.00	1.00	1.00	1.00	1.00	1.00	1.00
MLF Adj:	1.00	1.00	1.00	1.00	1.00	1.00	1.00	1.00	1.00	1.00	1.00	1.00
FinalVolume:	1	25	3	169	25	125	191	33	3	1	36	260
Saturation Flow Module:												
Adjustment:	1.00	1.00	1.00	1.00	1.00	1.00	1.00	1.00	1.00	1.00	1.00	1.00
Lanes:	0.03	0.86	0.11	0.53	0.08	0.39	0.85	0.14	0.01	0.01	0.12	0.87
Final Sat.:	20	481	60	355	53	263	535	92	9	3	89	644
Capacity Analysis Module:												
Vol/Sat:	0.05	0.05	0.05	0.48	0.48	0.48	0.36	0.36	0.36	0.40	0.40	0.40
Crit Moves:			****			****		****		****		
Delay/Veh:	8.9	8.9	8.9	12.2	12.2	12.2	11.1	11.1	11.1	10.5	10.5	10.5
Delay Adj:	1.00	1.00	1.00	1.00	1.00	1.00	1.00	1.00	1.00	1.00	1.00	1.00
AdjDel/Veh:	8.9	8.9	8.9	12.2	12.2	12.2	11.1	11.1	11.1	10.5	10.5	10.5
LOS by Move:	A	A	A	B	B	B	B	B	B	B	B	B
ApproachDel:	8.9			12.2			11.1			10.5		
Delay Adj:	1.00			1.00			1.00			1.00		
ApprAdjDel:	8.9			12.2			11.1			10.5		
LOS by Appr:	A			B			B			B		
AllWayAvgQ:	0.0	0.0	0.0	0.8	0.8	0.8	0.5	0.5	0.5	0.6	0.6	0.6

Note: Queue reported is the number of cars per lane.

Level Of Service Computation Report
2000 HCM Unsignalized Method (Future Volume Alternative)

Intersection #218 SR76 & Brittain Rd

Average Delay (sec/veh): 0.1 Worst Case Level Of Service: B[10.1]

Street Name:	Brittain Rd						SR76					
Approach:	North Bound			South Bound			East Bound			West Bound		
Movement:	L -	T -	R	L -	T -	R	L -	T -	R	L -	T -	R
Control:	Stop Sign			Stop Sign			Uncontrolled			Uncontrolled		
Rights:	Include			Include			Include			Include		
Lanes:	0 0	0 0	0	0 0	1! 0	0	0 1	0 0	0	0 0	0 1	0
Volume Module:												
Base Vol:	0	0	0	1	0	1	4	173	0	0	185	4
Growth Adj:	1.00	1.00	1.00	1.00	1.00	1.00	1.00	1.00	1.00	1.00	1.00	1.00
Initial Bse:	0	0	0	1	0	1	4	173	0	0	185	4
Added Vol:	0	0	0	0	0	0	0	0	0	0	0	0
PasserByVol:	0	0	0	0	0	0	0	0	0	0	0	0
Initial Fut:	0	0	0	1	0	1	4	173	0	0	185	4
User Adj:	1.00	1.00	1.00	1.00	1.00	1.00	1.00	1.00	1.00	1.00	1.00	1.00
PHF Adj:	0.95	0.95	0.95	0.95	0.95	0.95	0.95	0.95	0.95	0.95	0.95	0.95
PHF Volume:	0	0	0	1	0	1	4	182	0	0	195	4
Reduct Vol:	0	0	0	0	0	0	0	0	0	0	0	0
FinalVolume:	0	0	0	1	0	1	4	182	0	0	195	4
Critical Gap Module:												
Critical Gp:	xxxxx	xxxx	xxxxx	6.4	6.5	6.2	4.1	xxxx	xxxxx	xxxxx	xxxx	xxxxx
FollowUpTim:	xxxxx	xxxx	xxxxx	3.5	4.0	3.3	2.2	xxxx	xxxxx	xxxxx	xxxx	xxxxx
Capacity Module:												
Cnflict Vol:	xxxx	xxxx	xxxxx	387	387	197	199	xxxx	xxxxx	xxxx	xxxx	xxxxx
Potent Cap.:	xxxx	xxxx	xxxxx	616	547	844	1373	xxxx	xxxxx	xxxx	xxxx	xxxxx
Move Cap.:	xxxx	xxxx	xxxxx	615	545	844	1373	xxxx	xxxxx	xxxx	xxxx	xxxxx
Volume/Cap:	xxxx	xxxx	xxxx	0.00	0.00	0.00	0.00	xxxx	xxxx	xxxx	xxxx	xxxx
Level Of Service Module:												
2Way95thQ:	xxxx	xxxx	xxxxx	xxxx	xxxx	xxxxx	0.0	xxxx	xxxxx	xxxx	xxxx	xxxxx
Control Del:	xxxxx	xxxx	xxxxx	xxxxx	xxxx	xxxxx	7.6	xxxx	xxxxx	xxxxx	xxxx	xxxxx
LOS by Move:	*	*	*	*	*	*	A	*	*	*	*	*
Movement:	LT -	LTR -	RT	LT -	LTR -	RT	LT -	LTR -	RT	LT -	LTR -	RT
Shared Cap.:	xxxx	xxxx	xxxxx	xxxx	711	xxxxx	xxxx	xxxx	xxxxx	xxxx	xxxx	xxxxx
SharedQueue:	xxxxx	xxxx	xxxxx	xxxxx	0.0	xxxxx	0.0	xxxx	xxxxx	xxxxx	xxxx	xxxxx
Shrd ConDel:	xxxxx	xxxx	xxxxx	xxxxx	10.1	xxxxx	7.6	xxxx	xxxxx	xxxxx	xxxx	xxxxx
Shared LOS:	*	*	*	*	B	*	A	*	*	*	*	*
ApproachDel:	xxxxxx			10.1			xxxxxx			xxxxxx		
ApproachLOS:	*			B			*			*		

Note: Queue reported is the number of cars per lane.

Level Of Service Computation Report
2000 HCM Unsignalized Method (Future Volume Alternative)

Intersection #219 SR76 & E. Pala Mission Rd

Average Delay (sec/veh): 3.7 Worst Case Level Of Service: C[16.7]

Street Name:	E. Pala Mission Rd									SR76						
Approach:	North Bound				South Bound				East Bound				West Bound			
Movement:	L	-	T	- R	L	-	T	- R	L	-	T	- R	L	-	T	- R
Control:	Stop Sign				Stop Sign				Uncontrolled				Uncontrolled			
Rights:	Include				Include				Include				Include			
Lanes:	0 0	0	0	0	0 0	1!	0	0	0 1	0	0	0	0 0	0	1	0
Volume Module:																
Base Vol:	0	0	0	169	0	3			2	184	0		0	216	204	
Growth Adj:	1.00	1.00	1.00	1.00	1.00	1.00			1.00	1.00	1.00		1.00	1.00	1.00	
Initial Bse:	0	0	0	169	0	3			2	184	0		0	216	204	
Added Vol:	0	0	0	0	0	0			0	0	0		0	0	0	
PasserByVol:	0	0	0	0	0	0			0	0	0		0	0	0	
Initial Fut:	0	0	0	169	0	3			2	184	0		0	216	204	
User Adj:	1.00	1.00	1.00	1.00	1.00	1.00			1.00	1.00	1.00		1.00	1.00	1.00	
PHF Adj:	0.95	0.95	0.95	0.95	0.95	0.95			0.95	0.95	0.95		0.95	0.95	0.95	
PHF Volume:	0	0	0	178	0	3			2	194	0		0	227	215	
Reduct Vol:	0	0	0	0	0	0			0	0	0		0	0	0	
FinalVolume:	0	0	0	178	0	3			2	194	0		0	227	215	
Critical Gap Module:																
Critical Gp:	xxxxx	xxxx	xxxxx	6.4	6.5	6.2			4.1	xxxx	xxxxx	xxxxx	xxxx	xxxxx		
FollowUpTim:	xxxxx	xxxx	xxxxx	3.5	4.0	3.3			2.2	xxxx	xxxxx	xxxxx	xxxx	xxxxx		
Capacity Module:																
Cnflict Vol:	xxxx	xxxx	xxxxx	553	553	355			452	xxxx	xxxxx	xxxx	xxxx	xxxxx		
Potent Cap.:	xxxx	xxxx	xxxxx	494	441	689			1108	xxxx	xxxxx	xxxx	xxxx	xxxxx		
Move Cap.:	xxxx	xxxx	xxxxx	485	433	678			1099	xxxx	xxxxx	xxxx	xxxx	xxxxx		
Volume/Cap:	xxxx	xxxx	xxxx	0.37	0.00	0.00			0.00	xxxx	xxxx	xxxx	xxxx	xxxx		
Level Of Service Module:																
2Way95thQ:	xxxx	xxxx	xxxxx	xxxx	xxxx	xxxxx			0.0	xxxx	xxxxx	xxxx	xxxx	xxxxx		
Control Del:	xxxxx	xxxx	xxxxx	xxxxx	xxxx	xxxxx			8.3	xxxx	xxxxx	xxxxx	xxxx	xxxxx		
LOS by Move:	*	*	*	*	*	*			A	*	*	*	*	*		
Movement:	LT - LTR - RT				LT - LTR - RT				LT - LTR - RT				LT - LTR - RT			
Shared Cap.:	xxxx	xxxx	xxxxx	xxxx	488	xxxxx			xxxx	xxxx	xxxxx	xxxx	xxxx	xxxxx		
SharedQueue:	xxxxx	xxxx	xxxxx	xxxxx	1.7	xxxxx			0.0	xxxx	xxxxx	xxxxx	xxxx	xxxxx		
Shrd ConDel:	xxxxx	xxxx	xxxxx	xxxxx	16.7	xxxxx			8.3	xxxx	xxxxx	xxxxx	xxxx	xxxxx		
Shared LOS:	*	*	*	*	C	*			A	*	*	*	*	*		
ApproachDel:	xxxxxx				16.7				xxxxxx			xxxxxx				
ApproachLOS:	*				C				*			*				

Note: Queue reported is the number of cars per lane.

Level Of Service Computation Report
2000 HCM Unsignalized Method (Future Volume Alternative)

Intersection #220 SR76 & Lilac Rd

Average Delay (sec/veh): 0.3 Worst Case Level Of Service: B[13.1]

Street Name:	Lilac Rd									SR76						
Approach:	North Bound				South Bound				East Bound				West Bound			
Movement:	L	-	T	- R	L	-	T	- R	L	-	T	- R	L	-	T	- R
Control:	Stop Sign				Stop Sign				Uncontrolled				Uncontrolled			
Rights:	Include				Include				Include				Include			
Lanes:	0 0	1!	0	0	0 0	0	0	0	0 0	0	0	1	0 0	1	0	0
Volume Module:																
Base Vol:	7	0	8		0	0	0		0	358	4		9	413	0	
Growth Adj:	1.00	1.00	1.00		1.00	1.00	1.00		1.00	1.00	1.00		1.00	1.00	1.00	
Initial Bse:	7	0	8		0	0	0		0	358	4		9	413	0	
Added Vol:	0	0	0		0	0	0		0	0	0		0	0	0	
PasserByVol:	0	0	0		0	0	0		0	0	0		0	0	0	
Initial Fut:	7	0	8		0	0	0		0	358	4		9	413	0	
User Adj:	1.00	1.00	1.00		1.00	1.00	1.00		1.00	1.00	1.00		1.00	1.00	1.00	
PHF Adj:	0.95	0.95	0.95		0.95	0.95	0.95		0.95	0.95	0.95		0.95	0.95	0.95	
PHF Volume:	7	0	8		0	0	0		0	377	4		9	435	0	
Reduct Vol:	0	0	0		0	0	0		0	0	0		0	0	0	
FinalVolume:	7	0	8		0	0	0		0	377	4		9	435	0	
Critical Gap Module:																
Critical Gp:	6.4	6.5	6.2		xxxxx	xxxx	xxxxx		xxxxx	xxxx	xxxxx		4.1	xxxx	xxxxx	
FollowUpTim:	3.5	4.0	3.3		xxxxx	xxxx	xxxxx		xxxxx	xxxx	xxxxx		2.2	xxxx	xxxxx	
Capacity Module:																
Cnflict Vol:	833	833	379		xxxx	xxxx	xxxxx		xxxx	xxxx	xxxxx		381	xxxx	xxxxx	
Potent Cap.:	339	305	668		xxxx	xxxx	xxxxx		xxxx	xxxx	xxxxx		1177	xxxx	xxxxx	
Move Cap.:	337	302	668		xxxx	xxxx	xxxxx		xxxx	xxxx	xxxxx		1177	xxxx	xxxxx	
Volume/Cap:	0.02	0.00	0.01		xxxx	xxxx	xxxx		xxxx	xxxx	xxxx		0.01	xxxx	xxxx	
Level Of Service Module:																
2Way95thQ:	xxxx	xxxx	xxxxx		xxxx	xxxx	xxxxx		xxxx	xxxx	xxxxx		0.0	xxxx	xxxxx	
Control Del:	xxxxx	xxxx	xxxxx		xxxxx	xxxx	xxxxx		xxxxx	xxxx	xxxxx		8.1	xxxx	xxxxx	
LOS by Move:	*	*	*		*	*	*		*	*	*		A	*	*	
Movement:	LT - LTR - RT				LT - LTR - RT				LT - LTR - RT				LT - LTR - RT			
Shared Cap.:	xxxx	458	xxxxx		xxxx	xxxx	xxxxx		xxxx	xxxx	xxxxx		xxxx	xxxx	xxxxx	
SharedQueue:	xxxxx	0.1	xxxxx		xxxxx	xxxx	xxxxx		xxxxx	xxxx	xxxxx		0.0	xxxx	xxxxx	
Shrd ConDel:	xxxxx	13.1	xxxxx		xxxxx	xxxx	xxxxx		xxxxx	xxxx	xxxxx		8.1	xxxx	xxxxx	
Shared LOS:	*	B	*		*	*	*		*	*	*		A	*	*	
ApproachDel:	13.1				xxxxxx				xxxxxx				xxxxxx			
ApproachLOS:	B				*				*				*			

Note: Queue reported is the number of cars per lane.

Level Of Service Computation Report
2000 HCM Unsignalized Method (Future Volume Alternative)

Intersection #221 SR76 & Adams Dr

Average Delay (sec/veh): 0.2 Worst Case Level Of Service: B[13.4]

Street Name:	Adams Dr									SR76							
Approach:	North Bound				South Bound				East Bound				West Bound				
Movement:	L	-	T	-	R	L	-	T	-	R	L	-	T	-	R	L	-	T	-	R
Control:	Stop Sign					Stop Sign					Uncontrolled					Uncontrolled				
Rights:	Include					Include					Include					Include				
Lanes:	0	0	1!	0	0	0	0	1!	0	0	0	1	0	0	0	0	0	0	1	0
Volume Module:																				
Base Vol:	0	0	0	5	0	3	5	262	0	0	436	9								
Growth Adj:	1.00	1.00	1.00	1.00	1.00	1.00	1.00	1.00	1.00	1.00	1.00	1.00								
Initial Bse:	0	0	0	5	0	3	5	262	0	0	436	9								
Added Vol:	0	0	0	0	0	0	0	0	0	0	0	0								
PasserByVol:	0	0	0	0	0	0	0	0	0	0	0	0								
Initial Fut:	0	0	0	5	0	3	5	262	0	0	436	9								
User Adj:	1.00	1.00	1.00	1.00	1.00	1.00	1.00	1.00	1.00	1.00	1.00	1.00								
PHF Adj:	0.95	0.95	0.95	0.95	0.95	0.95	0.95	0.95	0.95	0.95	0.95	0.95								
PHF Volume:	0	0	0	5	0	3	5	276	0	0	459	9								
Reduct Vol:	0	0	0	0	0	0	0	0	0	0	0	0								
FinalVolume:	0	0	0	5	0	3	5	276	0	0	459	9								
Critical Gap Module:																				
Critical Gp:	7.1	6.5	6.2	6.4	6.5	6.2	4.1	xxxx	xxxxx	xxxxx	xxxx	xxxxx								
FollowUpTim:	3.5	4.0	3.3	3.5	4.0	3.3	2.2	xxxx	xxxxx	xxxxx	xxxx	xxxxx								
Capacity Module:																				
Cnflict Vol:	752	755	276	750	750	464	468	xxxx	xxxxx	xxxx	xxxx	xxxxx								
Potent Cap.:	327	338	763	379	340	598	1093	xxxx	xxxxx	xxxx	xxxx	xxxxx								
Move Cap.:	324	336	763	378	338	598	1093	xxxx	xxxxx	xxxx	xxxx	xxxxx								
Volume/Cap:	0.00	0.00	0.00	0.01	0.00	0.01	0.00	xxxx	xxxx	xxxx	xxxx	xxxx								
Level Of Service Module:																				
2Way95thQ:	xxxx	xxxx	xxxxx	xxxx	xxxx	xxxxx	0.0	xxxx	xxxxx	xxxx	xxxx	xxxxx								
Control Del:	xxxxx	xxxx	xxxxx	xxxxx	xxxx	xxxxx	8.3	xxxx	xxxxx	xxxxx	xxxx	xxxxx								
LOS by Move:	*	*	*	*	*	*	A	*	*	*	*	*								
Movement:	LT	-	LTR	-	RT	LT	-	LTR	-	RT	LT	-	LTR	-	RT	LT	-	LTR	-	RT
Shared Cap.:	xxxx	0	xxxxx	xxxx	438	xxxxx	xxxx	xxxx	xxxxx	xxxx	xxxx	xxxxx								
SharedQueue:	xxxxx	xxxx	xxxxx	xxxxx	0.1	xxxxx	0.0	xxxx	xxxxx	xxxxx	xxxx	xxxxx								
Shrd ConDel:	xxxxx	xxxx	xxxxx	xxxxx	13.4	xxxxx	8.3	xxxx	xxxxx	xxxxx	xxxx	xxxxx								
Shared LOS:	*	*	*	*	B	*	A	*	*	*	*	*								
ApproachDel:	xxxxxx			13.4			xxxxxx			xxxxxx										
ApproachLOS:	*			B			*			*										

Note: Queue reported is the number of cars per lane.

Level Of Service Computation Report
2000 HCM Unsignalized Method (Future Volume Alternative)

Intersection #222 SR76 & Cole Grade Rd

Average Delay (sec/veh): 2.9 Worst Case Level Of Service: C[17.9]

Street Name:	Cole Grade Rd									SR76							
Approach:	North Bound				South Bound				East Bound				West Bound				
Movement:	L	-	T	-	R	L	-	T	-	R	L	-	T	-	R	L	-	T	-	R
Control:	Stop Sign					Stop Sign					Uncontrolled					Uncontrolled				
Rights:	Include					Include					Include					Include				
Lanes:	0	0	1!	0	0	0	0	0	1	0	0	0	0	1	0	0	0	1!	0	0
Volume Module:																				
Base Vol:	72	3	37	0	1	1	0	221	125	41	300	3								
Growth Adj:	1.00	1.00	1.00	1.00	1.00	1.00	1.00	1.00	1.00	1.00	1.00	1.00								
Initial Bse:	72	3	37	0	1	1	0	221	125	41	300	3								
Added Vol:	0	0	0	0	0	0	0	0	0	0	0	0								
PasserByVol:	0	0	0	0	0	0	0	0	0	0	0	0								
Initial Fut:	72	3	37	0	1	1	0	221	125	41	300	3								
User Adj:	1.00	1.00	1.00	1.00	1.00	1.00	1.00	1.00	1.00	1.00	1.00	1.00								
PHF Adj:	0.95	0.95	0.95	0.95	0.95	0.95	0.95	0.95	0.95	0.95	0.95	0.95								
PHF Volume:	76	3	39	0	1	1	0	233	132	43	316	3								
Reduct Vol:	0	0	0	0	0	0	0	0	0	0	0	0								
FinalVolume:	76	3	39	0	1	1	0	233	132	43	316	3								
Critical Gap Module:																				
Critical Gp:	7.1	6.5	6.2	xxxxx	6.5	6.2	xxxxx	xxxx	xxxxx	4.1	xxxx	xxxxx								
FollowUpTim:	3.5	4.0	3.3	xxxxx	4.0	3.3	xxxxx	xxxx	xxxxx	2.2	xxxx	xxxxx								
Capacity Module:																				
Cnflict Vol:	723	724	318	xxxx	788	337	xxxx	xxxx	xxxxx	374	xxxx	xxxxx								
Potent Cap.:	341	352	722	xxxx	323	705	xxxx	xxxx	xxxxx	1184	xxxx	xxxxx								
Move Cap.:	325	333	710	xxxx	306	693	xxxx	xxxx	xxxxx	1174	xxxx	xxxxx								
Volume/Cap:	0.23	0.01	0.05	xxxx	0.00	0.00	xxxx	xxxx	xxxx	0.04	xxxx	xxxx								
Level Of Service Module:																				
2Way95thQ:	xxxx	xxxx	xxxxx	xxxx	xxxx	xxxxx	xxxx	xxxx	xxxxx	0.1	xxxx	xxxxx								
Control Del:	xxxxx	xxxx	xxxxx	xxxxx	xxxx	xxxxx	xxxxx	xxxx	xxxxx	8.2	xxxx	xxxxx								
LOS by Move:	*	*	*	*	*	*	*	*	*	A	*	*								
Movement:	LT	-	LTR	-	RT	LT	-	LTR	-	RT	LT	-	LTR	-	RT	LT	-	LTR	-	RT
Shared Cap.:	xxxx	396	xxxxx	xxxx	xxxx	425	xxxx	xxxx	xxxxx	xxxx	xxxx	xxxxx								
SharedQueue:	xxxxx	1.2	xxxxx	xxxxx	xxxx	0.0	xxxxx	xxxx	xxxxx	xxxxx	xxxx	xxxxx								
Shrd ConDel:	xxxxx	17.9	xxxxx	xxxxx	xxxx	13.5	xxxxx	xxxx	xxxxx	xxxxx	xxxx	xxxxx								
Shared LOS:	*	C	*	*	*	B	*	*	*	*	*	*								
ApproachDel:	17.9			13.5			xxxxxx			xxxxxx										
ApproachLOS:	C			B			*			*										

Note: Queue reported is the number of cars per lane.

Scenario Report

Scenario:	Ex AM + Proj
Command:	Default Command
Volume:	Ex AM
Geometry:	EX
Impact Fee:	Default Impact Fee
Trip Generation:	AM
Trip Distribution:	Project
Paths:	Default Path
Routes:	Default Route
Configuration:	Default Configuration

Impact Analysis Report
Level Of Service

Intersection	Base LOS	Base Del/ Veh	Base V/ C	Future LOS	Future Del/ Veh	Future V/ C	Change in
#201 SR76 & Vista Way	F	84.9	1.077	F	88.1	1.093	+ 3.270 D/V
#202 Mission Ave & River Rd	C	21.2	0.823	C	22.3	0.845	+ 1.066 D/V
#203 Mission Rd & Olive Hill Rd	D	37.7	0.862	D	38.1	0.871	+ 0.383 D/V
#204 SR76 & Mission Rd	C	28.8	0.725	C	29.0	0.738	+ 0.200 D/V
#205 SR76 & Gird Rd	B	13.4	0.623	B	13.5	0.649	+ 0.088 D/V
#206 SR76 & Old Hwy 395	C	31.1	0.576	C	31.3	0.586	+ 0.227 D/V
#207 SR76 & I-15 SB Ramps	D	37.0	0.786	D	44.2	0.865	+ 7.224 D/V
#208 SR76 & I-15 NB Ramps	C	25.6	0.480	C	28.4	0.607	+ 2.817 D/V
#209 SR76 & Pankey Rd	B	12.3	0.048	B	14.6	0.068	+ 2.287 D/V
#210 SR76 & Horse Ranch Creek Rd	A	0.0	0.000	C	16.9	0.062	+16.939 D/V
#211 SR76 & Rice Cyn Rd	B	11.2	0.033	C	16.0	0.088	+ 4.820 D/V
#212 SR76 & Couser Cyn Rd	B	12.3	0.057	C	17.4	0.097	+ 5.050 D/V
#214 SR76 & C. Drwy	A	1.0	0.169	B	18.8	0.378	+17.814 D/V
#216 SR76 & W. Pala Mission Rd	C	28.8	0.229	C	28.5	0.324	-0.271 D/V
#217 Pala Mission Rd & Pala Temecul	A	9.7	0.436	B	10.4	0.480	+ 0.044 V/C
#218 SR76 & Brittain Rd	A	9.1	0.004	A	9.2	0.005	+ 0.133 D/V
#219 SR76 & E. Pala Mission Rd	B	12.5	0.230	B	13.2	0.246	+ 0.695 D/V
#220 SR76 & Lilac Rd	B	11.8	0.029	B	12.3	0.041	+ 0.559 D/V
#221 SR76 & Adams Dr	B	10.1	0.008	B	10.2	0.008	+ 0.122 D/V
#222 SR76 & Cole Grade Rd	C	17.0	0.305	C	17.5	0.315	+ 0.510 D/V

Level Of Service Computation Report
2000 HCM Operations Method (Future Volume Alternative)

Intersection #201 SR76 & Vista Way

Cycle (sec): 120 Critical Vol./Cap.(X): 1.093
Loss Time (sec): 16 Average Delay (sec/veh): 88.1
Optimal Cycle: OPTIMIZED Level Of Service: F

Street Name:	SR76						Vista Way					
Approach:	North Bound			South Bound			East Bound			West Bound		
Movement:	L - T - R			L - T - R			L - T - R			L - T - R		
Control:	Protected			Protected			Protected			Protected		
Rights:	Include			Include			Include			Include		
Min. Green:	5	5	5	5	5	5	5	5	5	5	5	5
Y+R:	4.0	4.0	4.0	4.0	4.0	4.0	4.0	4.0	4.0	4.0	4.0	4.0
Lanes:	1	0	1 1	0	2	0	0 1	0	0	0 1!	0	0
Volume Module:												
Base Vol:	36	543	292	304	841	10	7	162	215	284	26	293
Growth Adj:	1.00	1.00	1.00	1.00	1.00	1.00	1.00	1.00	1.00	1.00	1.00	1.00
Initial Bse:	36	543	292	304	841	10	7	162	215	284	26	293
Added Vol:	1	7	0	5	19	0	0	1	1	0	1	2
PasserByVol:	0	0	0	0	0	0	0	0	0	0	0	0
Initial Fut:	37	550	292	309	860	10	7	163	216	284	27	295
User Adj:	1.00	1.00	1.00	1.00	1.00	1.00	1.00	1.00	1.00	1.00	1.00	1.00
PHF Adj:	0.95	0.95	0.95	0.95	0.95	0.95	0.95	0.95	0.95	0.95	0.95	0.95
PHF Volume:	39	579	307	325	905	11	7	172	227	299	28	311
Reduct Vol:	0	0	0	0	0	0	0	0	0	0	0	0
Reduced Vol:	39	579	307	325	905	11	7	172	227	299	28	311
PCE Adj:	1.00	1.00	1.00	1.00	1.00	1.00	1.00	1.00	1.00	1.00	1.00	1.00
MLF Adj:	1.00	1.00	1.00	1.00	1.00	1.00	1.00	1.00	1.00	1.00	1.00	1.00
FinalVolume:	39	579	307	325	905	11	7	172	227	299	28	311
Saturation Flow Module:												
Sat/Lane:	1900	1900	1900	1900	1900	1900	1900	1900	1900	1900	1900	1900
Adjustment:	0.93	0.88	0.88	0.90	0.98	0.98	0.90	0.90	0.90	0.94	0.94	0.83
Lanes:	1.00	1.31	0.69	2.00	0.99	0.01	0.02	0.42	0.56	0.91	0.09	1.00
Final Sat.:	1769	2191	1163	3432	1837	21	31	726	962	1626	155	1583
Capacity Analysis Module:												
Vol/Sat:	0.02	0.26	0.26	0.09	0.49	0.49	0.24	0.24	0.24	0.18	0.18	0.20
Crit Moves:	****				****		****					****
Green/Cycle:	0.04	0.35	0.35	0.13	0.44	0.44	0.21	0.22	0.22	0.17	0.17	0.17
Volume/Cap:	0.53	0.75	0.75	0.75	1.12	1.12	1.12	1.09	1.09	1.09	1.05	1.12
Uniform Del:	56.3	34.0	34.0	50.5	33.6	33.6	47.4	47.0	47.0	49.9	49.5	49.5
IncremntDel:	7.0	2.6	2.6	6.9	70.5	70.5	84.5	72.9	72.9	78.1	65.1	90.9
InitQueuDel:	0.0	0.0	0.0	0.0	0.0	0.0	0.0	0.0	0.0	0.0	0.0	0.0
Delay Adj:	1.00	1.00	1.00	1.00	1.00	1.00	1.00	1.00	1.00	1.00	1.00	1.00
Delay/Veh:	63.4	36.7	36.7	57.5	104	104.2	131.8	120	119.9	127.9	115	140.4
User DelAdj:	1.00	1.00	1.00	1.00	1.00	1.00	1.00	1.00	1.00	1.00	1.00	1.00
AdjDel/Veh:	63.4	36.7	36.7	57.5	104	104.2	131.8	120	119.9	127.9	115	140.4
LOS by Move:	E	D	D	E	F	F	F	F	F	F	F	F
HCM2k95thQ:	4	28	28	14	76	76	40	38	38	33	32	33

Level Of Service Computation Report
2000 HCM Operations Method (Future Volume Alternative)

Intersection #202 Mission Ave & River Rd

Cycle (sec): 140 Critical Vol./Cap.(X): 0.845
Loss Time (sec): 16 Average Delay (sec/veh): 22.3
Optimal Cycle: OPTIMIZED Level Of Service: C

Street Name:	SR76						River Rd					
Approach:	North Bound			South Bound			East Bound			West Bound		
Movement:	L - T - R			L - T - R			L - T - R			L - T - R		
Control:	Protected			Protected			Protected			Protected		
Rights:	Include			Include			Include			Include		
Min. Green:	5	5	5	5	5	5	5	5	5	5	5	5
Y+R:	4.0	4.0	4.0	4.0	4.0	4.0	4.0	4.0	4.0	4.0	4.0	4.0
Lanes:	1	0	1 0	0	0	0	0 1	0	1	0 0	0	0
Volume Module:												
Base Vol:	78	799	0	0	953	139	91	0	57	0	0	0
Growth Adj:	1.00	1.00	1.00	1.00	1.00	1.00	1.00	1.00	1.00	1.00	1.00	1.00
Initial Bse:	78	799	0	0	953	139	91	0	57	0	0	0
Added Vol:	0	9	0	0	23	7	3	0	0	0	0	0
PasserByVol:	0	0	0	0	0	0	0	0	0	0	0	0
Initial Fut:	78	808	0	0	976	146	94	0	57	0	0	0
User Adj:	1.00	1.00	1.00	1.00	1.00	1.00	1.00	1.00	1.00	1.00	1.00	1.00
PHF Adj:	0.95	0.95	0.95	0.95	0.95	0.95	0.95	0.95	0.95	0.95	0.95	0.95
PHF Volume:	82	851	0	0	1027	154	99	0	60	0	0	0
Reduct Vol:	0	0	0	0	0	0	0	0	0	0	0	0
Reduced Vol:	82	851	0	0	1027	154	99	0	60	0	0	0
PCE Adj:	1.00	1.00	1.00	1.00	1.00	1.00	1.00	1.00	1.00	1.00	1.00	1.00
MLF Adj:	1.00	1.00	1.00	1.00	1.00	1.00	1.00	1.00	1.00	1.00	1.00	1.00
FinalVolume:	82	851	0	0	1027	154	99	0	60	0	0	0
Saturation Flow Module:												
Sat/Lane:	1900	1900	1900	1900	1900	1900	1900	1900	1900	1900	1900	1900
Adjustment:	0.93	0.98	1.00	1.00	0.96	0.96	0.93	1.00	0.83	1.00	1.00	1.00
Lanes:	1.00	1.00	0.00	0.00	0.87	0.13	1.00	0.00	1.00	0.00	0.00	0.00
Final Sat.:	1769	1862	0	0	1591	238	1769	0	1583	0	0	0
Capacity Analysis Module:												
Vol/Sat:	0.05	0.46	0.00	0.00	0.65	0.65	0.06	0.00	0.04	0.00	0.00	0.00
Crit Moves:	****				****		****					
Green/Cycle:	0.05	0.76	0.00	0.00	0.76	0.76	0.07	0.00	0.05	0.00	0.00	0.00
Volume/Cap:	0.84	0.60	0.00	0.00	0.84	0.84	0.84	0.00	0.72	0.00	0.00	0.00
Uniform Del:	65.6	7.4	0.0	0.0	11.0	11.0	64.7	0.0	65.3	0.0	0.0	0.0
IncremntDel:	45.8	0.7	0.0	0.0	4.9	4.9	40.0	0.0	26.6	0.0	0.0	0.0
InitQueuDel:	0.0	0.0	0.0	0.0	0.0	0.0	0.0	0.0	0.0	0.0	0.0	0.0
Delay Adj:	1.00	1.00	0.00	0.00	1.00	1.00	1.00	0.00	1.00	0.00	0.00	0.00
Delay/Veh:	111.3	8.1	0.0	0.0	15.9	15.9	104.6	0.0	91.9	0.0	0.0	0.0
User DelAdj:	1.00	1.00	1.00	1.00	1.00	1.00	1.00	1.00	1.00	1.00	1.00	1.00
AdjDel/Veh:	111.3	8.1	0.0	0.0	15.9	15.9	104.6	0.0	91.9	0.0	0.0	0.0
LOS by Move:	F	A	A	A	B	B	F	A	F	A	A	A
HCM2k95thQ:	11	28	0	0	56	56	12	0	8	0	0	0

Level Of Service Computation Report
2000 HCM Operations Method (Future Volume Alternative)

Intersection #203 Mission Rd & Olive Hill Rd

Cycle (sec): 100 Critical Vol./Cap.(X): 0.871
Loss Time (sec): 16 Average Delay (sec/veh): 38.1
Optimal Cycle: OPTIMIZED Level Of Service: D

Street Name:	SR76						Olive Hill Rd					
Approach:	North Bound			South Bound			East Bound			West Bound		
Movement:	L - T - R			L - T - R			L - T - R			L - T - R		
Control:	Protected			Protected			Protected			Protected		
Rights:	Include			Include			Include			Include		
Min. Green:	5	5	5	5	5	5	5	5	5	5	5	5
Y+R:	4.0	4.0	4.0	4.0	4.0	4.0	4.0	4.0	4.0	4.0	4.0	4.0
Lanes:	1	0	1 1	0	1	0 2	0 1	1	0 1	0 1	0 1	0 1
Volume Module:												
Base Vol:	62	687	84	457	1004	47	87	174	75	47	81	252
Growth Adj:	1.00	1.00	1.00	1.00	1.00	1.00	1.00	1.00	1.00	1.00	1.00	1.00
Initial Bse:	62	687	84	457	1004	47	87	174	75	47	81	252
Added Vol:	0	13	0	3	31	1	1	0	0	0	0	1
PasserByVol:	0	0	0	0	0	0	0	0	0	0	0	0
Initial Fut:	62	700	84	460	1035	48	88	174	75	47	81	253
User Adj:	1.00	1.00	1.00	1.00	1.00	1.00	1.00	1.00	1.00	1.00	1.00	1.00
PHF Adj:	0.95	0.95	0.95	0.95	0.95	0.95	0.95	0.95	0.95	0.95	0.95	0.95
PHF Volume:	65	737	88	484	1089	51	93	183	79	49	85	266
Reduct Vol:	0	0	0	0	0	0	0	0	0	0	0	0
Reduced Vol:	65	737	88	484	1089	51	93	183	79	49	85	266
PCE Adj:	1.00	1.00	1.00	1.00	1.00	1.00	1.00	1.00	1.00	1.00	1.00	1.00
MLF Adj:	1.00	1.00	1.00	1.00	1.00	1.00	1.00	1.00	1.00	1.00	1.00	1.00
FinalVolume:	65	737	88	484	1089	51	93	183	79	49	85	266
Saturation Flow Module:												
Sat/Lane:	1900	1900	1900	1900	1900	1900	1900	1900	1900	1900	1900	1900
Adjustment:	0.93	0.92	0.92	0.93	0.93	0.83	0.93	0.98	0.83	0.96	0.96	0.83
Lanes:	1.00	1.79	0.21	1.00	2.00	1.00	1.00	1.00	1.00	0.37	0.63	1.00
Final Sat.:	1769	3108	373	1769	3538	1583	1769	1862	1583	671	1157	1583
Capacity Analysis Module:												
Vol/Sat:	0.04	0.24	0.24	0.27	0.31	0.03	0.05	0.10	0.05	0.07	0.07	0.17
Crit Moves:		****		****			****					****
Green/Cycle:	0.08	0.27	0.27	0.31	0.50	0.50	0.06	0.14	0.14	0.11	0.19	0.19
Volume/Cap:	0.45	0.87	0.87	0.87	0.61	0.06	0.87	0.68	0.34	0.68	0.38	0.87
Uniform Del:	43.8	34.7	34.7	32.4	17.7	12.7	46.6	40.6	38.5	42.9	35.1	39.1
IncremntDel:	2.2	8.8	8.8	14.0	0.6	0.0	49.1	6.8	0.9	9.1	0.7	22.6
InitQueuDel:	0.0	0.0	0.0	0.0	0.0	0.0	0.0	0.0	0.0	0.0	0.0	0.0
Delay Adj:	1.00	1.00	1.00	1.00	1.00	1.00	1.00	1.00	1.00	1.00	1.00	1.00
Delay/Veh:	46.0	43.5	43.5	46.3	18.3	12.7	95.7	47.4	39.4	52.0	35.8	61.8
User DelAdj:	1.00	1.00	1.00	1.00	1.00	1.00	1.00	1.00	1.00	1.00	1.00	1.00
AdjDel/Veh:	46.0	43.5	43.5	46.3	18.3	12.7	95.7	47.4	39.4	52.0	35.8	61.8
LOS by Move:	D	D	D	D	B	B	F	D	D	D	D	E
HCM2k95thQ:	5	28	28	30	23	2	10	13	5	10	8	20

Level Of Service Computation Report
2000 HCM Operations Method (Future Volume Alternative)

Intersection #204 SR76 & Mission Rd

Cycle (sec): 90 Critical Vol./Cap.(X): 0.738
Loss Time (sec): 12 Average Delay (sec/veh): 29.0
Optimal Cycle: OPTIMIZED Level Of Service: C

Street Name:	Mission Rd						SR76					
Approach:	North Bound			South Bound			East Bound			West Bound		
Movement:	L - T - R			L - T - R			L - T - R			L - T - R		
Control:	Split Phase			Split Phase			Protected			Protected		
Rights:	Include			Include			Include			Include		
Min. Green:	5	5	5	5	5	5	5	5	5	5	5	5
Y+R:	4.0	4.0	4.0	4.0	4.0	4.0	4.0	4.0	4.0	4.0	4.0	4.0
Lanes:	0	0	0 0	0	2	0 0	0 2	2	0 1	0 0	0	0 2 0 1
Volume Module:												
Base Vol:	0	0	0	104	0	678	489	511	0	0	748	83
Growth Adj:	1.00	1.00	1.00	1.00	1.00	1.00	1.00	1.00	1.00	1.00	1.00	1.00
Initial Bse:	0	0	0	104	0	678	489	511	0	0	748	83
Added Vol:	0	0	0	1	0	0	0	14	0	0	35	1
PasserByVol:	0	0	0	0	0	0	0	0	0	0	0	0
Initial Fut:	0	0	0	105	0	678	489	525	0	0	783	84
User Adj:	1.00	1.00	1.00	1.00	1.00	1.00	1.00	1.00	1.00	1.00	1.00	1.00
PHF Adj:	0.95	0.95	0.95	0.95	0.95	0.95	0.95	0.95	0.95	0.95	0.95	0.95
PHF Volume:	0	0	0	111	0	714	515	553	0	0	824	88
Reduct Vol:	0	0	0	0	0	0	0	0	0	0	0	0
Reduced Vol:	0	0	0	111	0	714	515	553	0	0	824	88
PCE Adj:	1.00	1.00	1.00	1.00	1.00	1.00	1.00	1.00	1.00	1.00	1.00	1.00
MLF Adj:	1.00	1.00	1.00	1.00	1.00	1.00	1.00	1.00	1.00	1.00	1.00	1.00
FinalVolume:	0	0	0	111	0	714	515	553	0	0	824	88
Saturation Flow Module:												
Sat/Lane:	1900	1900	1900	1900	1900	1900	1900	1900	1900	1900	1900	1900
Adjustment:	1.00	1.00	1.00	0.90	1.00	0.73	0.90	0.98	1.00	1.00	0.93	0.83
Lanes:	0.00	0.00	0.00	2.00	0.00	2.00	2.00	1.00	0.00	0.00	2.00	1.00
Final Sat.:	0	0	0	3432	0	2786	3432	1862	0	0	3538	1583
Capacity Analysis Module:												
Vol/Sat:	0.00	0.00	0.00	0.03	0.00	0.26	0.15	0.30	0.00	0.00	0.23	0.06
Crit Moves:						****	****				****	
Green/Cycle:	0.00	0.00	0.00	0.35	0.00	0.35	0.20	0.44	0.00	0.00	0.32	0.32
Volume/Cap:	0.00	0.00	0.00	0.09	0.00	0.74	0.74	0.68	0.00	0.00	0.74	0.18
Uniform Del:	0.0	0.0	0.0	19.8	0.0	25.8	33.6	20.3	0.0	0.0	27.5	22.3
IncremntDel:	0.0	0.0	0.0	0.0	0.0	3.0	4.1	2.3	0.0	0.0	2.6	0.2
InitQueuDel:	0.0	0.0	0.0	0.0	0.0	0.0	0.0	0.0	0.0	0.0	0.0	0.0
Delay Adj:	0.00	0.00	0.00	1.00	0.00	1.00	1.00	1.00	0.00	0.00	1.00	1.00
Delay/Veh:	0.0	0.0	0.0	19.8	0.0	28.8	37.7	22.6	0.0	0.0	30.1	22.5
User DelAdj:	1.00	1.00	1.00	1.00	1.00	1.00	1.00	1.00	1.00	1.00	1.00	1.00
AdjDel/Veh:	0.0	0.0	0.0	19.8	0.0	28.8	37.7	22.6	0.0	0.0	30.1	22.5
LOS by Move:	A	A	A	B	A	C	D	C	A	A	C	C
HCM2k95thQ:	0	0	0	2	0	21	16	23	0	0	22	4

Level Of Service Computation Report
2000 HCM Operations Method (Future Volume Alternative)

Intersection #205 SR76 & Gird Rd

Cycle (sec): 90 | Critical Vol./Cap.(X): 0.649
Loss Time (sec): 12 | Average Delay (sec/veh): 13.5
Optimal Cycle: OPTIMIZED | Level Of Service: B

Street Name:	Gird Rd						SR76					
Approach:	North Bound			South Bound			East Bound			West Bound		
Movement:	L	T	R	L	T	R	L	T	R	L	T	R
Control:	Split Phase			Split Phase			Protected			Protected		
Rights:	Include			Include			Include			Include		
Min. Green:	5	5	5	5	5	5	5	5	5	5	5	5
Y+R:	4.0	4.0	4.0	4.0	4.0	4.0	4.0	4.0	4.0	4.0	4.0	4.0
Lanes:	0	0	0	0	0	1	0	0	0	1	0	1
Volume Module: PM Peak												
Base Vol:	0	0	0	57	0	111	53	599	0	0	768	40
Growth Adj:	1.00	1.00	1.00	1.00	1.00	1.00	1.00	1.00	1.00	1.00	1.00	1.00
Initial Bse:	0	0	0	57	0	111	53	599	0	0	768	40
Added Vol:	0	0	0	0	0	0	0	16	0	0	41	0
PasserByVol:	0	0	0	0	0	0	0	0	0	0	0	0
Initial Fut:	0	0	0	57	0	111	53	615	0	0	809	40
User Adj:	1.00	1.00	1.00	1.00	1.00	1.00	1.00	1.00	1.00	1.00	1.00	1.00
PHF Adj:	0.95	0.95	0.95	0.95	0.95	0.95	0.95	0.95	0.95	0.95	0.95	0.95
PHF Volume:	0	0	0	60	0	117	56	647	0	0	852	42
Reduct Vol:	0	0	0	0	0	0	0	0	0	0	0	0
Reduced Vol:	0	0	0	60	0	117	56	647	0	0	852	42
PCE Adj:	1.00	1.00	1.00	1.00	1.00	1.00	1.00	1.00	1.00	1.00	1.00	1.00
MLF Adj:	1.00	1.00	1.00	1.00	1.00	1.00	1.00	1.00	1.00	1.00	1.00	1.00
FinalVolume:	0	0	0	60	0	117	56	647	0	0	852	42
Saturation Flow Module:												
Sat/Lane:	1900	1900	1900	1900	1900	1900	1900	1900	1900	1900	1900	1900
Adjustment:	1.00	1.00	1.00	0.93	1.00	0.83	0.93	0.98	1.00	1.00	0.98	0.83
Lanes:	0.00	0.00	0.00	1.00	0.00	1.00	1.00	1.00	0.00	0.00	1.00	1.00
Final Sat.:	0	0	0	1769	0	1583	1769	1862	0	0	1862	1583
Capacity Analysis Module:												
Vol/Sat:	0.00	0.00	0.00	0.03	0.00	0.07	0.03	0.35	0.00	0.00	0.46	0.03
Crit Moves:						****	****				****	
Green/Cycle:	0.00	0.00	0.00	0.11	0.00	0.11	0.06	0.65	0.00	0.00	0.70	0.70
Volume/Cap:	0.00	0.00	0.00	0.30	0.00	0.65	0.57	0.53	0.00	0.00	0.65	0.04
Uniform Del:	0.0	0.0	0.0	36.7	0.0	38.2	41.4	8.4	0.0	0.0	7.5	4.2
IncremntDel:	0.0	0.0	0.0	0.9	0.0	8.5	7.6	0.5	0.0	0.0	1.2	0.0
InitQueuDel:	0.0	0.0	0.0	0.0	0.0	0.0	0.0	0.0	0.0	0.0	0.0	0.0
Delay Adj:	0.00	0.00	0.00	1.00	0.00	1.00	1.00	1.00	0.00	0.00	1.00	1.00
Delay/Veh:	0.0	0.0	0.0	37.5	0.0	46.7	49.0	8.9	0.0	0.0	8.8	4.2
User DelAdj:	1.00	1.00	1.00	1.00	1.00	1.00	1.00	1.00	1.00	1.00	1.00	1.00
AdjDel/Veh:	0.0	0.0	0.0	37.5	0.0	46.7	49.0	8.9	0.0	0.0	8.8	4.2
LOS by Move:	A	A	A	D	A	D	D	A	A	A	A	A
HCM2k95thQ:	0	0	0	4	0	9	5	18	0	0	24	1

Level Of Service Computation Report
2000 HCM Operations Method (Future Volume Alternative)

Intersection #206 SR76 & Old Hwy 395

Cycle (sec): 90 | Critical Vol./Cap.(X): 0.586
Loss Time (sec): 16 | Average Delay (sec/veh): 31.3
Optimal Cycle: OPTIMIZED | Level Of Service: C

Street Name:	Old Hwy 395						SR76					
Approach:	North Bound			South Bound			East Bound			West Bound		
Movement:	L	T	R	L	T	R	L	T	R	L	T	R
Control:	Split Phase			Split Phase			Protected			Protected		
Rights:	Include			Include			Include			Include		
Min. Green:	5	5	5	5	5	5	5	5	5	5	5	5
Y+R:	4.0	4.0	4.0	4.0	4.0	4.0	4.0	4.0	4.0	4.0	4.0	4.0
Lanes:	1	0	0	1	0	0	0	1!	0	0	1	0
Volume Module: PM Peak												
Base Vol:	123	61	56	229	76	49	48	486	41	53	60	95
Growth Adj:	1.00	1.00	1.00	1.00	1.00	1.00	1.00	1.00	1.00	1.00	1.00	1.00
Initial Bse:	123	61	56	229	76	49	48	486	41	53	60	95
Added Vol:	0	0	2	0	0	0	0	19	0	4	46	1
PasserByVol:	0	0	0	0	0	0	0	0	0	0	0	0
Initial Fut:	123	61	58	229	76	49	48	505	41	57	106	96
User Adj:	1.00	1.00	1.00	1.00	1.00	1.00	1.00	1.00	1.00	1.00	1.00	1.00
PHF Adj:	0.95	0.95	0.95	0.95	0.95	0.95	0.95	0.95	0.95	0.95	0.95	0.95
PHF Volume:	129	64	61	241	80	52	51	532	43	60	112	101
Reduct Vol:	0	0	0	0	0	0	0	0	0	0	0	0
Reduced Vol:	129	64	61	241	80	52	51	532	43	60	112	101
PCE Adj:	1.00	1.00	1.00	1.00	1.00	1.00	1.00	1.00	1.00	1.00	1.00	1.00
MLF Adj:	1.00	1.00	1.00	1.00	1.00	1.00	1.00	1.00	1.00	1.00	1.00	1.00
FinalVolume:	129	64	61	241	80	52	51	532	43	60	112	101
Saturation Flow Module:												
Sat/Lane:	1900	1900	1900	1900	1900	1900	1900	1900	1900	1900	1900	1900
Adjustment:	0.93	0.91	0.91	0.93	0.93	0.93	0.93	0.92	0.92	0.93	0.93	0.83
Lanes:	1.00	0.51	0.49	0.65	0.21	0.14	1.00	1.85	0.15	1.00	2.00	1.00
Final Sat.:	1769	885	841	1145	380	245	1769	3236	263	1769	3538	1575
Capacity Analysis Module:												
Vol/Sat:	0.07	0.07	0.07	0.21	0.21	0.21	0.03	0.16	0.16	0.03	0.03	0.06
Crit Moves:	****				****			****		****		
Green/Cycle:	0.12	0.12	0.12	0.36	0.36	0.36	0.16	0.28	0.28	0.06	0.18	0.18
Volume/Cap:	0.59	0.58	0.58	0.59	0.59	0.59	0.18	0.59	0.59	0.59	0.17	0.35
Uniform Del:	37.2	37.2	37.2	23.4	23.4	23.4	32.9	27.9	27.9	41.3	31.2	32.2
IncremntDel:	4.0	4.0	4.0	1.4	1.4	1.4	0.3	0.9	0.9	8.5	0.1	0.8
InitQueuDel:	0.0	0.0	0.0	0.0	0.0	0.0	0.0	0.0	0.0	0.0	0.0	0.0
Delay Adj:	1.00	1.00	1.00	1.00	1.00	1.00	1.00	1.00	1.00	1.00	1.00	1.00
Delay/Veh:	41.2	41.1	41.1	24.8	24.8	24.8	33.2	28.8	28.8	49.9	31.3	33.0
User DelAdj:	1.00	1.00	1.00	1.00	1.00	1.00	1.00	1.00	1.00	1.00	1.00	1.00
AdjDel/Veh:	41.2	41.1	41.1	24.8	24.8	24.8	33.2	28.8	28.8	49.9	31.3	33.0
LOS by Move:	D	D	D	C	C	C	C	C	C	D	C	C
HCM2k95thQ:	9	8	8	17	17	17	3	15	15	3	3	5

Level Of Service Computation Report
2000 HCM Operations Method (Future Volume Alternative)

Intersection #207 SR76 & I-15 SB Ramps

Cycle (sec): 125 Critical Vol./Cap.(X): 0.865
Loss Time (sec): 12 Average Delay (sec/veh): 44.2
Optimal Cycle: OPTIMIZED Level Of Service: D

Street Name:	I-15 SB Ramps									SR76		
Approach:	North Bound			South Bound			East Bound			West Bound		
Movement:	L - T - R			L - T - R			L - T - R			L - T - R		
Control:	Split Phase			Split Phase			Protected			Protected		
Rights:	Include			Include			Include			Include		
Min. Green:	5	5	5	5	5	5	5	5	5	5	5	5
Y+R:	4.0	4.0	4.0	4.0	4.0	4.0	4.0	4.0	4.0	4.0	4.0	4.0
Lanes:	0	0	0	0	0	0	1	0	0	1	0	0
Volume Module:PM Peak												
Base Vol:	0	0	0	79	4	558	0	518	329	78	243	0
Growth Adj:	1.00	1.00	1.00	1.00	1.00	1.00	1.00	1.00	1.00	1.00	1.00	1.00
Initial Bse:	0	0	0	79	4	558	0	518	329	78	243	0
Added Vol:	0	0	0	4	0	0	0	20	0	101	51	0
PasserByVol:	0	0	0	0	0	0	0	0	0	0	0	0
Initial Fut:	0	0	0	83	4	558	0	538	329	179	294	0
User Adj:	1.00	1.00	1.00	1.00	1.00	1.00	1.00	1.00	1.00	1.00	1.00	1.00
PHF Adj:	0.95	0.95	0.95	0.95	0.95	0.95	0.95	0.95	0.95	0.95	0.95	0.95
PHF Volume:	0	0	0	87	4	587	0	566	346	188	309	0
Reduct Vol:	0	0	0	0	0	0	0	0	0	0	0	0
Reduced Vol:	0	0	0	87	4	587	0	566	346	188	309	0
PCE Adj:	1.00	1.00	1.00	1.00	1.00	1.00	1.00	1.00	1.00	1.00	1.00	1.00
MLF Adj:	1.00	1.00	1.00	1.00	1.00	1.00	1.00	1.00	1.00	1.00	1.00	1.00
FinalVolume:	0	0	0	87	4	587	0	566	346	188	309	0
Saturation Flow Module:												
Sat/Lane:	1900	1900	1900	1900	1900	1900	1900	1900	1900	1900	1900	1900
Adjustment:	1.00	1.00	1.00	0.96	0.96	0.83	1.00	0.98	0.83	0.93	0.98	1.00
Lanes:	0.00	0.00	0.00	0.95	0.05	1.00	0.00	1.00	1.00	1.00	1.00	0.00
Final Sat.:	0	0	0	1743	84	1583	0	1862	1583	1769	1862	0
Capacity Analysis Module:												
Vol/Sat:	0.00	0.00	0.00	0.05	0.05	0.37	0.00	0.30	0.22	0.11	0.17	0.00
Crit Moves:						****		****		****		
Green/Cycle:	0.00	0.00	0.00	0.43	0.43	0.43	0.00	0.35	0.35	0.12	0.38	0.00
Volume/Cap:	0.00	0.00	0.00	0.12	0.12	0.86	0.00	0.86	0.62	0.86	0.43	0.00
Uniform Del:	0.0	0.0	0.0	21.4	21.4	32.4	0.0	37.8	33.6	53.8	28.6	0.0
IncremntDel:	0.0	0.0	0.0	0.1	0.1	11.2	0.0	11.6	2.2	28.3	0.4	0.0
InitQueuDel:	0.0	0.0	0.0	0.0	0.0	0.0	0.0	0.0	0.0	0.0	0.0	0.0
Delay Adj:	0.00	0.00	0.00	1.00	1.00	1.00	0.00	1.00	1.00	1.00	1.00	0.00
Delay/Veh:	0.0	0.0	0.0	21.5	21.5	43.6	0.0	49.3	35.8	82.1	29.0	0.0
User DelAdj:	1.00	1.00	1.00	1.00	1.00	1.00	1.00	1.00	1.00	1.00	1.00	1.00
AdjDel/Veh:	0.0	0.0	0.0	21.5	21.5	43.6	0.0	49.3	35.8	82.1	29.0	0.0
LOS by Move:	A	A	A	C	C	D	A	D	D	F	C	A
HCM2k95thQ:	0	0	0	4	4	38	0	35	20	14	16	0

Level Of Service Computation Report
2000 HCM Operations Method (Future Volume Alternative)

Intersection #208 SR76 & I-15 NB Ramps

Cycle (sec): 100 Critical Vol./Cap.(X): 0.607
Loss Time (sec): 12 Average Delay (sec/veh): 28.4
Optimal Cycle: OPTIMIZED Level Of Service: C

Street Name:	I-15 NB Ramps									SR76		
Approach:	North Bound			South Bound			East Bound			West Bound		
Movement:	L - T - R			L - T - R			L - T - R			L - T - R		
Control:	Split Phase			Split Phase			Protected			Protected		
Rights:	Include			Include			Include			Include		
Min. Green:	5	5	5	5	5	5	5	5	5	5	5	5
Y+R:	4.0	4.0	4.0	4.0	4.0	4.0	4.0	4.0	4.0	4.0	4.0	4.0
Lanes:	0	1	0	0	1	0	0	0	0	0	1	0
Volume Module:PM Peak												
Base Vol:	137	1	124	0	0	0	401	201	0	0	176	59
Growth Adj:	1.00	1.00	1.00	1.00	1.00	1.00	1.00	1.00	1.00	1.00	1.00	1.00
Initial Bse:	137	1	124	0	0	0	401	201	0	0	176	59
Added Vol:	0	0	41	0	0	0	0	24	0	0	152	10
PasserByVol:	0	0	0	0	0	0	0	0	0	0	0	0
Initial Fut:	137	1	165	0	0	0	401	225	0	0	328	69
User Adj:	1.00	1.00	1.00	1.00	1.00	1.00	1.00	1.00	1.00	1.00	1.00	1.00
PHF Adj:	0.95	0.95	0.95	0.95	0.95	0.95	0.95	0.95	0.95	0.95	0.95	0.95
PHF Volume:	144	1	174	0	0	0	422	237	0	0	345	73
Reduct Vol:	0	0	0	0	0	0	0	0	0	0	0	0
Reduced Vol:	144	1	174	0	0	0	422	237	0	0	345	73
PCE Adj:	1.00	1.00	1.00	1.00	1.00	1.00	1.00	1.00	1.00	1.00	1.00	1.00
MLF Adj:	1.00	1.00	1.00	1.00	1.00	1.00	1.00	1.00	1.00	1.00	1.00	1.00
FinalVolume:	144	1	174	0	0	0	422	237	0	0	345	73
Saturation Flow Module:												
Sat/Lane:	1900	1900	1900	1900	1900	1900	1900	1900	1900	1900	1900	1900
Adjustment:	0.91	0.91	0.83	1.00	1.00	1.00	0.93	0.98	1.00	1.00	0.98	0.83
Lanes:	0.99	0.01	1.00	0.00	0.00	0.00	1.00	1.00	0.00	0.00	1.00	1.00
Final Sat.:	1723	13	1583	0	0	0	1769	1862	0	0	1862	1583
Capacity Analysis Module:												
Vol/Sat:	0.08	0.08	0.11	0.00	0.00	0.00	0.24	0.13	0.00	0.00	0.19	0.05
Crit Moves:			****				****				****	
Green/Cycle:	0.18	0.18	0.18	0.00	0.00	0.00	0.39	0.50	0.00	0.00	0.31	0.31
Volume/Cap:	0.46	0.46	0.61	0.00	0.00	0.00	0.61	0.25	0.00	0.00	0.61	0.15
Uniform Del:	36.6	36.6	37.7	0.0	0.0	0.0	24.2	14.2	0.0	0.0	29.6	25.3
IncremntDel:	1.1	1.1	3.7	0.0	0.0	0.0	1.5	0.1	0.0	0.0	1.9	0.1
InitQueuDel:	0.0	0.0	0.0	0.0	0.0	0.0	0.0	0.0	0.0	0.0	0.0	0.0
Delay Adj:	1.00	1.00	1.00	0.00	0.00	0.00	1.00	1.00	0.00	0.00	1.00	1.00
Delay/Veh:	37.7	37.7	41.4	0.0	0.0	0.0	25.7	14.4	0.0	0.0	31.5	25.4
User DelAdj:	1.00	1.00	1.00	1.00	1.00	1.00	1.00	1.00	1.00	1.00	1.00	1.00
AdjDel/Veh:	37.7	37.7	41.4	0.0	0.0	0.0	25.7	14.4	0.0	0.0	31.5	25.4
LOS by Move:	D	D	D	A	A	A	C	B	A	A	C	C
HCM2k95thQ:	9	9	11	0	0	0	18	8	0	0	18	3

```
------------------------------------------------------------------------------
------------------------------------------------------------------------------
                       Level Of Service Computation Report
           2000 HCM Unsignalized Method (Future Volume Alternative)
******************************************************************************
Intersection #209 SR76 & Pankey Rd
******************************************************************************
Average Delay (sec/veh):      1.1       Worst Case Level Of Service: B[ 14.6]
******************************************************************************
Street Name:            Pankey Rd                         SR76
Approach:      North Bound      South Bound       East Bound       West Bound
Movement:     L  -  T  -  R    L  -  T  -  R    L  -  T  -  R    L  -  T  -  R
------------|---------------||---------------||---------------||---------------|
Control:        Stop Sign        Stop Sign       Uncontrolled     Uncontrolled
Rights:           Include          Include          Include          Include
Lanes:        0  0  1! 0  0    0  0  1! 0  0    1  0  1  1  0    1  0  1  1  0
------------|---------------||---------------||---------------||---------------|
Volume Module: >> Count Date: 25 Oct 2006 <<
Base Vol:      21    0     8     1    0     2     3  309     6     5  205     1
Growth Adj:  1.00 1.00  1.00  1.00 1.00  1.00  1.00 1.00  1.00  1.00 1.00  1.00
Initial Bse:   21    0     8     1    0     2     3  309     6     5  205     1
Added Vol:      0    0     9     4    0     0     0   65     0    23  162    11
PasserByVol:    0    0     0     0    0     0     0    0     0     0    0     0
Initial Fut:   21    0    17     5    0     2     3  374     6    28  367    12
User Adj:    1.00 1.00  1.00  1.00 1.00  1.00  1.00 1.00  1.00  1.00 1.00  1.00
PHF Adj:     0.95 0.95  0.95  0.95 0.95  0.95  0.95 0.95  0.95  0.95 0.95  0.95
PHF Volume:    22    0    18     5    0     2     3  394     6    29  386    13
Reduct Vol:     0    0     0     0    0     0     0    0     0     0    0     0
FinalVolume:   22    0    18     5    0     2     3  394     6    29  386    13
------------|---------------||---------------||---------------||---------------|
Critical Gap Module:
Critical Gp:  7.5  6.5   6.9   7.5  6.5   6.9   4.1 xxxx xxxxx   4.1 xxxx xxxxx
FollowUpTim:  3.5  4.0   3.3   3.5  4.0   3.3   2.2 xxxx xxxxx   2.2 xxxx xxxxx
------------|---------------||---------------||---------------||---------------|
Capacity Module:
Cnflict Vol:  675  881   220   675  878   219   409 xxxx xxxxx   410 xxxx xxxxx
Potent Cap.:  340  284   784   340  285   785  1146 xxxx xxxxx  1145 xxxx xxxxx
Move Cap.:    326  271   771   319  272   772  1137 xxxx xxxxx  1136 xxxx xxxxx
Volume/Cap:  0.07 0.00  0.02  0.02 0.00  0.00  0.00 xxxx  xxxx  0.03 xxxx  xxxx
------------|---------------||---------------||---------------||---------------|
Level Of Service Module:
2Way95thQ:   xxxx xxxx xxxxx  xxxx xxxx xxxxx   0.0 xxxx xxxxx   0.1 xxxx xxxxx
Control Del:xxxxx xxxx xxxxx xxxxx xxxx xxxxx   8.2 xxxx xxxxx   8.3 xxxx xxxxx
LOS by Move:    *    *     *     *    *     *     A    *     *     A    *     *
Movement:     LT - LTR - RT    LT - LTR - RT    LT - LTR - RT    LT - LTR - RT
Shared Cap.: xxxx  439 xxxxx  xxxx  384 xxxxx  xxxx xxxx xxxxx  xxxx xxxx xxxxx
SharedQueue:xxxxx  0.3 xxxxx xxxxx  0.1 xxxxx xxxxx xxxx xxxxx xxxxx xxxx xxxxx
Shrd ConDel:xxxxx 14.0 xxxxx xxxxx 14.6 xxxxx xxxxx xxxx xxxxx xxxxx xxxx xxxxx
Shared LOS:     *    B     *     *    B     *     *    *     *     *    *     *
ApproachDel:      14.0            14.6           xxxxxx           xxxxxx
ApproachLOS:         B               B                *                *
******************************************************************************
Note: Queue reported is the number of cars per lane.
******************************************************************************
```



```
------------------------------------------------------------------------------
------------------------------------------------------------------------------
                       Level Of Service Computation Report
           2000 HCM Unsignalized Method (Future Volume Alternative)
******************************************************************************
Intersection #210 SR76 & Horse Ranch Creek Rd
******************************************************************************
Average Delay (sec/veh):      0.4       Worst Case Level Of Service: C[ 16.9]
******************************************************************************
Street Name:       Horse Ranch Creek Rd                     SR76
Approach:      North Bound      South Bound       East Bound       West Bound
Movement:     L  -  T  -  R    L  -  T  -  R    L  -  T  -  R    L  -  T  -  R
------------|---------------||---------------||---------------||---------------|
Control:        Stop Sign        Stop Sign       Uncontrolled     Uncontrolled
Rights:           Include          Include          Include          Include
Lanes:        0  0  1! 0  0    1  0  0  0  0    0  0  1  0  0    0  0  0  1  0
------------|---------------||---------------||---------------||---------------|
Volume Module:
Base Vol:       0    0     0     0    0     0     0  318     0     0  211     0
Growth Adj:  1.00 1.00  1.00  1.00 1.00  1.00  1.00 1.00  1.00  1.00 1.00  1.00
Initial Bse:    0    0     0     0    0     0     0  318     0     0  211     0
Added Vol:      0    0     0    19    0     0     0   79     0     0  196    47
PasserByVol:    0    0     0     0    0     0     0    0     0     0    0     0
Initial Fut:    0    0     0    19    0     0     0  397     0     0  407    47
User Adj:    1.00 1.00  1.00  1.00 1.00  1.00  1.00 1.00  1.00  1.00 1.00  1.00
PHF Adj:     0.95 0.95  0.95  0.95 0.95  0.95  0.95 0.95  0.95  0.95 0.95  0.95
PHF Volume:     0    0     0    20    0     0     0  418     0     0  428    49
Reduct Vol:     0    0     0     0    0     0     0    0     0     0    0     0
FinalVolume:    0    0     0    20    0     0     0  418     0     0  428    49
------------|---------------||---------------||---------------||---------------|
Critical Gap Module:
Critical Gp:  7.1  6.5   6.2   6.4 xxxx xxxxx xxxxx xxxx xxxxx xxxxx xxxx xxxxx
FollowUpTim:  3.5  4.0   3.3   3.5 xxxx xxxxx xxxxx xxxx xxxxx xxxxx xxxx xxxxx
------------|---------------||---------------||---------------||---------------|
Capacity Module:
Cnflict Vol:  871  896   418   871 xxxx xxxxx  xxxx xxxx xxxxx  xxxx xxxx xxxxx
Potent Cap.:  271  280   635   322 xxxx xxxxx  xxxx xxxx xxxxx  xxxx xxxx xxxxx
Move Cap.:    271  280   635   322 xxxx xxxxx  xxxx xxxx xxxxx  xxxx xxxx xxxxx
Volume/Cap:  0.00 0.00  0.00  0.06 xxxx  xxxx  xxxx xxxx  xxxx  xxxx xxxx  xxxx
------------|---------------||---------------||---------------||---------------|
Level Of Service Module:
2Way95thQ:   xxxx xxxx xxxxx   0.2 xxxx xxxxx  xxxx xxxx xxxxx  xxxx xxxx xxxxx
Control Del:xxxxx xxxx xxxxx  16.9 xxxx xxxxx xxxxx xxxx xxxxx xxxxx xxxx xxxxx
LOS by Move:    *    *     *     C    *     *     *    *     *     *    *     *
Movement:     LT - LTR - RT    LT - LTR - RT    LT - LTR - RT    LT - LTR - RT
Shared Cap.: xxxx    0 xxxxx  xxxx xxxx xxxxx  xxxx xxxx xxxxx  xxxx xxxx xxxxx
SharedQueue:xxxxx xxxx xxxxx xxxxx xxxx xxxxx xxxxx xxxx xxxxx xxxxx xxxx xxxxx
Shrd ConDel:xxxxx xxxx xxxxx xxxxx xxxx xxxxx xxxxx xxxx xxxxx xxxxx xxxx xxxxx
Shared LOS:     *    *     *     *    *     *     *    *     *     *    *     *
ApproachDel:    xxxxxx           16.9           xxxxxx           xxxxxx
ApproachLOS:         *              C                *                *
******************************************************************************
Note: Queue reported is the number of cars per lane.
******************************************************************************
```

```
------------------------------------------------------------------------------
------------------------------------------------------------------------------
                      Level Of Service Computation Report
           2000 HCM Unsignalized Method (Future Volume Alternative)
******************************************************************************
Intersection #211 SR76 & Rice Cyn Rd
******************************************************************************
Average Delay (sec/veh):      0.9       Worst Case Level Of Service: C[ 16.0]
******************************************************************************
Street Name:           Rice Cyn Rd                          SR76
Approach:      North Bound      South Bound       East Bound       West Bound
Movement:     L  -  T  -  R    L  -  T  -  R    L  -  T  -  R    L  -  T  -  R
------------|---------------||---------------||---------------||---------------|
Control:        Stop Sign        Stop Sign       Uncontrolled     Uncontrolled
Rights:           Include          Include          Include          Include
Lanes:        0  0  0  0  0    0  0  1! 0  0    0  1  0  0  0    0  0  0  1  0
------------|---------------||---------------||---------------||---------------|
Volume Module: >> Count Date: 19 Oct 2006 <<
Base Vol:       0    0     0    15    0    24    11  281     0     0  209     9
Growth Adj:  1.00 1.00  1.00  1.00 1.00  1.00  1.00 1.00  1.00  1.00 1.00  1.00
Initial Bse:    0    0     0    15    0    24    11  281     0     0  209     9
Added Vol:      0    0     0     9    0     0     0   98     0     0  243    21
PasserByVol:    0    0     0     0    0     0     0    0     0     0    0     0
Initial Fut:    0    0     0    24    0    24    11  379     0     0  452    30
User Adj:    1.00 1.00  1.00  1.00 1.00  1.00  1.00 1.00  1.00  1.00 1.00  1.00
PHF Adj:     0.95 0.95  0.95  0.95 0.95  0.95  0.95 0.95  0.95  0.95 0.95  0.95
PHF Volume:     0    0     0    25    0    25    12  399     0     0  476    32
Reduct Vol:     0    0     0     0    0     0     0    0     0     0    0     0
FinalVolume:    0    0     0    25    0    25    12  399     0     0  476    32
------------|---------------||---------------||---------------||---------------|
Critical Gap Module:
Critical Gp:xxxxx xxxx xxxxx   6.4  6.5   6.2   4.1 xxxx xxxxx xxxxx xxxx xxxxx
FollowUpTim:xxxxx xxxx xxxxx   3.5  4.0   3.3   2.2 xxxx xxxxx xxxxx xxxx xxxxx
------------|---------------||---------------||---------------||---------------|
Capacity Module:
Cnflict Vol: xxxx xxxx xxxxx   934  934   512   517 xxxx xxxxx  xxxx xxxx xxxxx
Potent Cap.: xxxx xxxx xxxxx   295  266   562  1049 xxxx xxxxx  xxxx xxxx xxxxx
Move Cap.:   xxxx xxxx xxxxx   288  259   553  1040 xxxx xxxxx  xxxx xxxx xxxxx
Volume/Cap:  xxxx xxxx  xxxx  0.09 0.00  0.05  0.01 xxxx  xxxx  xxxx xxxx  xxxx
------------|---------------||---------------||---------------||---------------|
Level Of Service Module:
2Way95thQ:   xxxx xxxx xxxxx  xxxx xxxx xxxxx   0.0 xxxx xxxxx  xxxx xxxx xxxxx
Control Del:xxxxx xxxx xxxxx xxxxx xxxx xxxxx   8.5 xxxx xxxxx xxxxx xxxx xxxxx
LOS by Move:    *    *     *     *    *     *     A    *     *     *    *     *
Movement:     LT - LTR - RT    LT - LTR - RT    LT - LTR - RT    LT - LTR - RT
Shared Cap.: xxxx xxxx xxxxx  xxxx  379 xxxxx  xxxx xxxx xxxxx  xxxx xxxx xxxxx
SharedQueue:xxxxx xxxx xxxxx xxxxx  0.5 xxxxx   0.0 xxxx xxxxx xxxxx xxxx xxxxx
Shrd ConDel:xxxxx xxxx xxxxx xxxxx 16.0 xxxxx   8.5 xxxx xxxxx xxxxx xxxx xxxxx
Shared LOS:     *    *     *     *    C     *     A    *     *     *    *     *
ApproachDel:    xxxxxx             16.0           xxxxxx           xxxxxx
ApproachLOS:         *                C                *                *
******************************************************************************
Note: Queue reported is the number of cars per lane.
******************************************************************************
```



```
------------------------------------------------------------------------------
------------------------------------------------------------------------------
                      Level Of Service Computation Report
           2000 HCM Unsignalized Method (Future Volume Alternative)
******************************************************************************
Intersection #212 SR76 & Couser Cyn Rd
******************************************************************************
Average Delay (sec/veh):      0.7       Worst Case Level Of Service: C[ 17.4]
******************************************************************************
Street Name:          Couser Cyn Rd                         SR76
Approach:      North Bound      South Bound       East Bound       West Bound
Movement:     L  -  T  -  R    L  -  T  -  R    L  -  T  -  R    L  -  T  -  R
------------|---------------||---------------||---------------||---------------|
Control:        Stop Sign        Stop Sign       Uncontrolled     Uncontrolled
Rights:           Include          Include          Include          Include
Lanes:        0  0  1! 0  0    0  0  1! 0  0    0  0  0  1  0    0  1  0  0  0
------------|---------------||---------------||---------------||---------------|
Volume Module:
Base Vol:      27    0     7     0    0     0     0  286    10     5  188     0
Growth Adj:  1.00 1.00  1.00  1.00 1.00  1.00  1.00 1.00  1.00  1.00 1.00  1.00
Initial Bse:   27    0     7     0    0     0     0  286    10     5  188     0
Added Vol:      0    0     0     0    0     0     0  106     0     1  264     0
PasserByVol:    0    0     0     0    0     0     0    0     0     0    0     0
Initial Fut:   27    0     7     0    0     0     0  392    10     6  452     0
User Adj:    1.00 1.00  1.00  1.00 1.00  1.00  1.00 1.00  1.00  1.00 1.00  1.00
PHF Adj:     0.95 0.95  0.95  0.95 0.95  0.95  0.95 0.95  0.95  0.95 0.95  0.95
PHF Volume:    28    0     7     0    0     0     0  413    11     6  476     0
Reduct Vol:     0    0     0     0    0     0     0    0     0     0    0     0
FinalVolume:   28    0     7     0    0     0     0  413    11     6  476     0
------------|---------------||---------------||---------------||---------------|
Critical Gap Module:
Critical Gp:  6.4  6.5   6.2   7.1  6.5   6.2 xxxxx xxxx xxxxx   4.1 xxxx xxxxx
FollowUpTim:  3.5  4.0   3.3   3.5  4.0   3.3 xxxxx xxxx xxxxx   2.2 xxxx xxxxx
------------|---------------||---------------||---------------||---------------|
Capacity Module:
Cnflict Vol:  926  926   438   930  932   496  xxxx xxxx xxxxx   433 xxxx xxxxx
Potent Cap.:  298  269   619   248  267   574  xxxx xxxx xxxxx  1126 xxxx xxxxx
Move Cap.:    292  263   609   239  261   564  xxxx xxxx xxxxx  1117 xxxx xxxxx
Volume/Cap:  0.10 0.00  0.01  0.00 0.00  0.00  xxxx xxxx  xxxx  0.01 xxxx  xxxx
------------|---------------||---------------||---------------||---------------|
Level Of Service Module:
2Way95thQ:   xxxx xxxx xxxxx  xxxx xxxx xxxxx  xxxx xxxx xxxxx   0.0 xxxx xxxxx
Control Del:xxxxx xxxx xxxxx xxxxx xxxx xxxxx xxxxx xxxx xxxxx   8.2 xxxx xxxxx
LOS by Move:    *    *     *     *    *     *     *    *     *     A    *     *
Movement:     LT - LTR - RT    LT - LTR - RT    LT - LTR - RT    LT - LTR - RT
Shared Cap.: xxxx  327 xxxxx  xxxx    0 xxxxx  xxxx xxxx xxxxx  xxxx xxxx xxxxx
SharedQueue:xxxxx  0.4 xxxxx xxxxx xxxx xxxxx xxxxx xxxx xxxxx   0.0 xxxx xxxxx
Shrd ConDel:xxxxx 17.4 xxxxx xxxxx xxxx xxxxx xxxxx xxxx xxxxx   8.2 xxxx xxxxx
Shared LOS:     *    C     *     *    *     *     *    *     *     A    *     *
ApproachDel:     17.4            xxxxxx           xxxxxx           xxxxxx
ApproachLOS:         C                *                *                *
******************************************************************************
Note: Queue reported is the number of cars per lane.
******************************************************************************
```

Level Of Service Computation Report
2000 HCM Operations Method (Future Volume Alternative)

Intersection #214 SR76 & C. Drwy

Cycle (sec): 90 Critical Vol./Cap.(X): 0.378
Loss Time (sec): 12 Average Delay (sec/veh): 18.8
Optimal Cycle: OPTIMIZED Level Of Service: B

Street Name:	C. Drwy									SR76		
Approach:	North Bound			South Bound			East Bound			West Bound		
Movement:	L -	T -	R	L -	T -	R	L -	T -	R	L -	T -	R
Control:	Protected			Protected			Permitted			Permitted		
Rights:	Include			Include			Include			Include		
Min. Green:	5	5	5	5	5	5	5	5	5	5	5	5
Y+R:	4.0	4.0	4.0	4.0	4.0	4.0	4.0	4.0	4.0	4.0	4.0	4.0
Lanes:	0	0	1! 0	0	1	0	0	0	1	1	0	1
Volume Module:												
Base Vol:	0	0	0	0	0	0	0	259	0	0	210	0
Growth Adj:	1.00	1.00	1.00	1.00	1.00	1.00	1.00	1.00	1.00	1.00	1.00	1.00
Initial Bse:	0	0	0	0	0	0	0	259	0	0	210	0
Added Vol:	0	0	0	170	0	273	110	0	0	0	0	68
PasserByVol:	0	0	0	0	0	0	0	0	0	0	0	0
Initial Fut:	0	0	0	170	0	273	110	259	0	0	210	68
User Adj:	1.00	1.00	1.00	1.00	1.00	1.00	1.00	1.00	1.00	1.00	1.00	1.00
PHF Adj:	0.95	0.95	0.95	0.95	0.95	0.95	0.95	0.95	0.95	0.95	0.95	0.95
PHF Volume:	0	0	0	179	0	287	116	273	0	0	221	72
Reduct Vol:	0	0	0	0	0	0	0	0	0	0	0	0
Reduced Vol:	0	0	0	179	0	287	116	273	0	0	221	72
PCE Adj:	1.00	1.00	1.00	1.00	1.00	1.00	1.00	1.00	1.00	1.00	1.00	1.00
MLF Adj:	1.00	1.00	1.00	1.00	1.00	1.00	1.00	1.00	1.00	1.00	1.00	1.00
FinalVolume:	0	0	0	179	0	287	116	273	0	0	221	72
Saturation Flow Module:												
Sat/Lane:	1900	1900	1900	1900	1900	1900	1900	1900	1900	1900	1900	1900
Adjustment:	1.00	1.00	1.00	0.93	1.00	0.83	0.57	0.98	1.00	1.00	0.98	0.83
Lanes:	0.00	1.00	0.00	1.00	0.00	1.00	1.00	1.00	0.00	0.00	1.00	1.00
Final Sat.:	0	1900	0	1769	0	1583	1086	1862	0	0	1862	1583
Capacity Analysis Module:												
Vol/Sat:	0.00	0.00	0.00	0.10	0.00	0.18	0.11	0.15	0.00	0.00	0.12	0.05
Crit Moves:						****		****				
Green/Cycle:	0.00	0.00	0.00	0.35	0.00	0.48	0.39	0.39	0.00	0.00	0.39	0.39
Volume/Cap:	0.00	0.00	0.00	0.29	0.00	0.38	0.28	0.38	0.00	0.00	0.31	0.12
Uniform Del:	0.0	0.0	0.0	21.4	0.0	14.9	18.9	19.8	0.0	0.0	19.2	17.7
IncremntDel:	0.0	0.0	0.0	0.3	0.0	0.3	0.4	0.3	0.0	0.0	0.2	0.1
InitQueuDel:	0.0	0.0	0.0	0.0	0.0	0.0	0.0	0.0	0.0	0.0	0.0	0.0
Delay Adj:	0.00	0.00	0.00	1.00	0.00	1.00	1.00	1.00	0.00	0.00	1.00	1.00
Delay/Veh:	0.0	0.0	0.0	21.7	0.0	15.2	19.3	20.2	0.0	0.0	19.4	17.8
User DelAdj:	1.00	1.00	1.00	1.00	1.00	1.00	1.00	1.00	1.00	1.00	1.00	1.00
AdjDel/Veh:	0.0	0.0	0.0	21.7	0.0	15.2	19.3	20.2	0.0	0.0	19.4	17.8
LOS by Move:	A	A	A	C	A	B	B	C	A	A	B	B
HCM2k95thQ:	0	0	0	7	0	10	5	11	0	0	8	3

Level Of Service Computation Report
2000 HCM Operations Method (Future Volume Alternative)

Intersection #216 SR76 & W. Pala Mission Rd

Cycle (sec): 100 Critical Vol./Cap.(X): 0.324
Loss Time (sec): 12 Average Delay (sec/veh): 28.5
Optimal Cycle: 90 Level Of Service: C

Street Name:	W. Pala Mission Rd									SR76		
Approach:	North Bound			South Bound			East Bound			West Bound		
Movement:	L -	T -	R	L -	T -	R	L -	T -	R	L -	T -	R
Control:	Split Phase			Split Phase			Protected			Protected		
Rights:	Include			Include			Include			Include		
Min. Green:	5	5	5	5	5	5	5	5	5	5	5	5
Y+R:	4.0	4.0	4.0	4.0	4.0	4.0	4.0	4.0	4.0	4.0	4.0	4.0
Lanes:	1	0	0 1	0	0	1	0	0	1	1	0	1
Volume Module:												
Base Vol:	10	8	3	19	14	108	104	150	5	5	92	14
Growth Adj:	1.00	1.00	1.00	1.00	1.00	1.00	1.00	1.00	1.00	1.00	1.00	1.00
Initial Bse:	10	8	3	19	14	108	104	150	5	5	92	14
Added Vol:	25	0	0	0	0	29	71	35	63	0	14	0
PasserByVol:	0	0	0	0	0	0	0	0	0	0	0	0
Initial Fut:	35	8	3	19	14	137	175	185	68	5	106	14
User Adj:	1.00	1.00	1.00	1.00	1.00	1.00	1.00	1.00	1.00	1.00	1.00	1.00
PHF Adj:	0.95	0.95	0.95	0.95	0.95	0.95	0.95	0.95	0.95	0.95	0.95	0.95
PHF Volume:	37	8	3	20	15	144	184	195	72	5	112	15
Reduct Vol:	0	0	0	0	0	0	0	0	0	0	0	0
Reduced Vol:	37	8	3	20	15	144	184	195	72	5	112	15
PCE Adj:	1.00	1.00	1.00	1.00	1.00	1.00	1.00	1.00	1.00	1.00	1.00	1.00
MLF Adj:	1.00	1.00	1.00	1.00	1.00	1.00	1.00	1.00	1.00	1.00	1.00	1.00
FinalVolume:	37	8	3	20	15	144	184	195	72	5	112	15
Saturation Flow Module:												
Sat/Lane:	1900	1900	1900	1900	1900	1900	1900	1900	1900	1900	1900	1900
Adjustment:	0.93	0.94	0.94	0.95	0.95	0.83	0.93	0.89	0.89	0.93	0.96	0.96
Lanes:	1.00	0.73	0.27	0.58	0.42	1.00	1.00	1.46	0.54	1.00	0.88	0.12
Final Sat.:	1769	1299	487	1042	768	1583	1769	2483	913	1769	1615	213
Capacity Analysis Module:												
Vol/Sat:	0.02	0.01	0.01	0.02	0.02	0.09	0.10	0.08	0.08	0.00	0.07	0.07
Crit Moves:	****					****	****				****	
Green/Cycle:	0.06	0.06	0.06	0.28	0.28	0.28	0.32	0.33	0.33	0.21	0.21	0.21
Volume/Cap:	0.32	0.10	0.10	0.07	0.07	0.32	0.32	0.24	0.24	0.01	0.32	0.32
Uniform Del:	44.7	44.1	44.1	26.3	26.3	28.4	25.7	24.6	24.6	31.4	33.3	33.3
IncremntDel:	1.7	0.4	0.4	0.1	0.1	0.4	0.3	0.1	0.1	0.0	0.5	0.5
InitQueuDel:	0.0	0.0	0.0	0.0	0.0	0.0	0.0	0.0	0.0	0.0	0.0	0.0
Delay Adj:	1.00	1.00	1.00	1.00	1.00	1.00	1.00	1.00	1.00	1.00	1.00	1.00
Delay/Veh:	46.4	44.5	44.5	26.4	26.4	28.9	26.0	24.7	24.7	31.5	33.7	33.7
User DelAdj:	1.00	1.00	1.00	1.00	1.00	1.00	1.00	1.00	1.00	1.00	1.00	1.00
AdjDel/Veh:	46.4	44.5	44.5	26.4	26.4	28.9	26.0	24.7	24.7	31.5	33.7	33.7
LOS by Move:	D	D	D	C	C	C	C	C	C	C	C	C
HCM2k95thQ:	3	1	1	2	2	7	9	6	6	0	7	7

```
------------------------------------------------------------------------------
------------------------------------------------------------------------------
                      Level Of Service Computation Report
           2000 HCM 4-Way Stop Method (Future Volume Alternative)
******************************************************************************
Intersection #217 Pala Mission Rd & Pala Temecula Rd
******************************************************************************
Cycle (sec):         100                Critical Vol./Cap.(X):         0.480
Loss Time (sec):       0                Average Delay (sec/veh):        10.4
Optimal Cycle:         0                Level Of Service:                  B
******************************************************************************
Street Name:         Pala Temecula Rd                  Pala Mission Rd
Approach:      North Bound      South Bound       East Bound       West Bound
Movement:     L  -  T  -  R    L  -  T  -  R    L  -  T  -  R    L  -  T  -  R
------------|---------------||---------------||---------------||---------------|
Control:        Stop Sign        Stop Sign        Stop Sign        Stop Sign
Rights:           Include          Include          Include          Include
Min. Green:     5    5     5     5    5     5     5    5     5     5    5     5
Lanes:        0  0  0  1  0    0  0  1! 0  0    0  0  1! 0  0    0  0  1! 0  0
------------|---------------||---------------||---------------||---------------|
Volume Module:
Base Vol:       0    6     9   167   40   124    70   44     4     1   14    87
Growth Adj:  1.00 1.00  1.00  1.00 1.00  1.00  1.00 1.00  1.00  1.00 1.00  1.00
Initial Bse:    0    6     9   167   40   124    70   44     4     1   14    87
Added Vol:      0    0     0     0    0    22    55    0     0     0    0     0
PasserByVol:    0    0     0     0    0     0     0    0     0     0    0     0
Initial Fut:    0    6     9   167   40   146   125   44     4     1   14    87
User Adj:    1.00 1.00  1.00  1.00 1.00  1.00  1.00 1.00  1.00  1.00 1.00  1.00
PHF Adj:     0.95 0.95  0.95  0.95 0.95  0.95  0.95 0.95  0.95  0.95 0.95  0.95
PHF Volume:     0    6     9   176   42   154   132   46     4     1   15    92
Reduct Vol:     0    0     0     0    0     0     0    0     0     0    0     0
Reduced Vol:    0    6     9   176   42   154   132   46     4     1   15    92
PCE Adj:     1.00 1.00  1.00  1.00 1.00  1.00  1.00 1.00  1.00  1.00 1.00  1.00
MLF Adj:     1.00 1.00  1.00  1.00 1.00  1.00  1.00 1.00  1.00  1.00 1.00  1.00
FinalVolume:    0    6     9   176   42   154   132   46     4     1   15    92
------------|---------------||---------------||---------------||---------------|
Saturation Flow Module:
Adjustment:  1.00 1.00  1.00  1.00 1.00  1.00  1.00 1.00  1.00  1.00 1.00  1.00
Lanes:       0.00 0.40  0.60  0.48 0.11  0.41  0.73 0.25  0.02  0.01 0.14  0.85
Final Sat.:     0  280   421   367   88   320   483  170    15     7  100   622
------------|---------------||---------------||---------------||---------------|
Capacity Analysis Module:
Vol/Sat:     xxxx 0.02  0.02  0.48 0.48  0.48  0.27 0.27  0.27  0.15 0.15  0.15
Crit Moves:                 ****       ****             ****                ****
Delay/Veh:    0.0  7.8   7.8  11.3 11.3  11.3   9.8  9.8   9.8   8.3  8.3   8.3
Delay Adj:   1.00 1.00  1.00  1.00 1.00  1.00  1.00 1.00  1.00  1.00 1.00  1.00
AdjDel/Veh:   0.0  7.8   7.8  11.3 11.3  11.3   9.8  9.8   9.8   8.3  8.3   8.3
LOS by Move:    *    A     A     B    B     B     A    A     A     A    A     A
ApproachDel:       7.8             11.3              9.8              8.3
Delay Adj:        1.00             1.00             1.00             1.00
ApprAdjDel:        7.8             11.3              9.8              8.3
LOS by Appr:         A                B                A                A
AllWayAvgQ:   0.0  0.0   0.0   0.8  0.8   0.8   0.3  0.3   0.3   0.1  0.1   0.1
******************************************************************************
Note: Queue reported is the number of cars per lane.
******************************************************************************
```



```
------------------------------------------------------------------------------
------------------------------------------------------------------------------
                      Level Of Service Computation Report
           2000 HCM Unsignalized Method (Future Volume Alternative)
******************************************************************************
Intersection #218 SR76 & Brittain Rd
******************************************************************************
Average Delay (sec/veh):      0.2       Worst Case Level Of Service: A[  9.2]
******************************************************************************
Street Name:           Brittain Rd                          SR76
Approach:      North Bound      South Bound       East Bound       West Bound
Movement:     L  -  T  -  R    L  -  T  -  R    L  -  T  -  R    L  -  T  -  R
------------|---------------||---------------||---------------||---------------|
Control:        Stop Sign        Stop Sign       Uncontrolled     Uncontrolled
Rights:           Include          Include          Include          Include
Lanes:        0  0  0  0  0    0  0  1! 0  0    0  1  0  0  0    0  0  0  1  0
------------|---------------||---------------||---------------||---------------|
Volume Module:
Base Vol:       0    0     0     1    0     4     4  173     0     0  103     1
Growth Adj:  1.00 1.00  1.00  1.00 1.00  1.00  1.00 1.00  1.00  1.00 1.00  1.00
Initial Bse:    0    0     0     1    0     4     4  173     0     0  103     1
Added Vol:      0    0     0     0    0     0     0   35     0     0   14     0
PasserByVol:    0    0     0     0    0     0     0    0     0     0    0     0
Initial Fut:    0    0     0     1    0     4     4  208     0     0  117     1
User Adj:    1.00 1.00  1.00  1.00 1.00  1.00  1.00 1.00  1.00  1.00 1.00  1.00
PHF Adj:     0.95 0.95  0.95  0.95 0.95  0.95  0.95 0.95  0.95  0.95 0.95  0.95
PHF Volume:     0    0     0     1    0     4     4  219     0     0  123     1
Reduct Vol:     0    0     0     0    0     0     0    0     0     0    0     0
FinalVolume:    0    0     0     1    0     4     4  219     0     0  123     1
------------|---------------||---------------||---------------||---------------|
Critical Gap Module:
Critical Gp:xxxxx xxxx xxxxx   6.4  6.5   6.2   4.1 xxxx xxxxx xxxxx xxxx xxxxx
FollowUpTim:xxxxx xxxx xxxxx   3.5  4.0   3.3   2.2 xxxx xxxxx xxxxx xxxx xxxxx
------------|---------------||---------------||---------------||---------------|
Capacity Module:
Cnflict Vol: xxxx xxxx xxxxx   351  351   124   124 xxxx xxxxx  xxxx xxxx xxxxx
Potent Cap.: xxxx xxxx xxxxx   646  573   927  1463 xxxx xxxxx  xxxx xxxx xxxxx
Move Cap.:   xxxx xxxx xxxxx   645  572   927  1463 xxxx xxxxx  xxxx xxxx xxxxx
Volume/Cap:  xxxx xxxx  xxxx  0.00 0.00  0.00  0.00 xxxx  xxxx  xxxx xxxx  xxxx
------------|---------------||---------------||---------------||---------------|
Level Of Service Module:
2Way95thQ:   xxxx xxxx xxxxx  xxxx xxxx xxxxx   0.0 xxxx xxxxx  xxxx xxxx xxxxx
Control Del:xxxxx xxxx xxxxx xxxxx xxxx xxxxx   7.5 xxxx xxxxx xxxxx xxxx xxxxx
LOS by Move:     *    *     *     *    *     *     A     *     *     *    *     *
Movement:     LT - LTR - RT    LT - LTR - RT    LT - LTR - RT    LT - LTR - RT
Shared Cap.: xxxx xxxx xxxxx  xxxx  853 xxxxx  xxxx xxxx xxxxx  xxxx xxxx xxxxx
SharedQueue:xxxxx xxxx xxxxx xxxxx  0.0 xxxxx   0.0 xxxx xxxxx xxxxx xxxx xxxxx
Shrd ConDel:xxxxx xxxx xxxxx xxxxx  9.2 xxxxx   7.5 xxxx xxxxx xxxxx xxxx xxxxx
Shared LOS:      *    *     *     *    A     *     A     *     *     *    *     *
ApproachDel:    xxxxxx               9.2            xxxxxx            xxxxxx
ApproachLOS:         *                 A                 *                 *
******************************************************************************
Note: Queue reported is the number of cars per lane.
******************************************************************************
```

```
------------------------------------------------------------------------------
------------------------------------------------------------------------------
                       Level Of Service Computation Report
           2000 HCM Unsignalized Method (Future Volume Alternative)
******************************************************************************
Intersection #219 SR76 & E. Pala Mission Rd
******************************************************************************
Average Delay (sec/veh):      3.3       Worst Case Level Of Service: B[ 13.2]
******************************************************************************
Street Name:         E. Pala Mission Rd                     SR76
Approach:      North Bound      South Bound       East Bound       West Bound
Movement:     L  -  T  -  R    L  -  T  -  R    L  -  T  -  R    L  -  T  -  R
------------|---------------||---------------||---------------||---------------|
Control:        Stop Sign        Stop Sign       Uncontrolled     Uncontrolled
Rights:           Include          Include          Include          Include
Lanes:        0  0  0  0  0    0  0  1! 0  0    0  1  0  0  0    0  0  0  1  0
------------|---------------||---------------||---------------||---------------|
Volume Module:
Base Vol:       0    0     0   136    0     3     6  173     0     0   88   106
Growth Adj:  1.00 1.00  1.00  1.00 1.00  1.00  1.00 1.00  1.00  1.00 1.00  1.00
Initial Bse:    0    0     0   136    0     3     6  173     0     0   88   106
Added Vol:      0    0     0     0    0     0     0   35     0     0   14     0
PasserByVol:    0    0     0     0    0     0     0    0     0     0    0     0
Initial Fut:    0    0     0   136    0     3     6  208     0     0  102   106
User Adj:    1.00 1.00  1.00  1.00 1.00  1.00  1.00 1.00  1.00  1.00 1.00  1.00
PHF Adj:     0.95 0.95  0.95  0.95 0.95  0.95  0.95 0.95  0.95  0.95 0.95  0.95
PHF Volume:     0    0     0   143    0     3     6  219     0     0  107   112
Reduct Vol:     0    0     0     0    0     0     0    0     0     0    0     0
FinalVolume:    0    0     0   143    0     3     6  219     0     0  107   112
------------|---------------||---------------||---------------||---------------|
Critical Gap Module:
Critical Gp:xxxxx xxxx xxxxx   6.4  6.5   6.2   4.1 xxxx xxxxx xxxxx xxxx xxxxx
FollowUpTim:xxxxx xxxx xxxxx   3.5  4.0   3.3   2.2 xxxx xxxxx xxxxx xxxx xxxxx
------------|---------------||---------------||---------------||---------------|
Capacity Module:
Cnflict Vol: xxxx xxxx xxxxx   415  415   183   229 xxxx xxxxx  xxxx xxxx xxxxx
Potent Cap.: xxxx xxxx xxxxx   594  528   859  1339 xxxx xxxxx  xxxx xxxx xxxxx
Move Cap.:   xxxx xxxx xxxxx   582  517   845  1328 xxxx xxxxx  xxxx xxxx xxxxx
Volume/Cap:  xxxx xxxx  xxxx  0.25 0.00  0.00  0.00 xxxx  xxxx  xxxx xxxx  xxxx
------------|---------------||---------------||---------------||---------------|
Level Of Service Module:
2Way95thQ:   xxxx xxxx xxxxx  xxxx xxxx xxxxx   0.0 xxxx xxxxx  xxxx xxxx xxxxx
Control Del:xxxxx xxxx xxxxx xxxxx xxxx xxxxx   7.7 xxxx xxxxx xxxxx xxxx xxxxx
LOS by Move:    *    *     *     *    *     *     A    *     *     *    *     *
Movement:     LT - LTR - RT    LT - LTR - RT    LT - LTR - RT    LT - LTR - RT
Shared Cap.: xxxx xxxx xxxxx  xxxx  586 xxxxx  xxxx xxxx xxxxx  xxxx xxxx xxxxx
SharedQueue:xxxxx xxxx xxxxx xxxxx  1.0 xxxxx   0.0 xxxx xxxxx xxxxx xxxx xxxxx
Shrd ConDel:xxxxx xxxx xxxxx xxxxx 13.2 xxxxx   7.7 xxxx xxxxx xxxxx xxxx xxxxx
Shared LOS:     *    *     *     *    B     *     A    *     *     *    *     *
ApproachDel:    xxxxxx            13.2           xxxxxx           xxxxxx
ApproachLOS:         *              B                *                *
******************************************************************************
Note: Queue reported is the number of cars per lane.
******************************************************************************
```



```
------------------------------------------------------------------------------
------------------------------------------------------------------------------
                       Level Of Service Computation Report
           2000 HCM Unsignalized Method (Future Volume Alternative)
******************************************************************************
Intersection #220 SR76 & Lilac Rd
******************************************************************************
Average Delay (sec/veh):      0.5       Worst Case Level Of Service: B[ 12.3]
******************************************************************************
Street Name:             Lilac Rd                           SR76
Approach:      North Bound      South Bound       East Bound       West Bound
Movement:     L  -  T  -  R    L  -  T  -  R    L  -  T  -  R    L  -  T  -  R
------------|---------------||---------------||---------------||---------------|
Control:        Stop Sign        Stop Sign       Uncontrolled     Uncontrolled
Rights:           Include          Include          Include          Include
Lanes:        0  0  1! 0  0    0  0  0  0  0    0  0  0  1  0    0  1  0  0  0
------------|---------------||---------------||---------------||---------------|
Volume Module:
Base Vol:      14    0     4     0    0     0     0  306     7     2  181     0
Growth Adj:  1.00 1.00  1.00  1.00 1.00  1.00  1.00 1.00  1.00  1.00 1.00  1.00
Initial Bse:   14    0     4     0    0     0     0  306     7     2  181     0
Added Vol:      5    0     0     0    0     0     0   23    12     0    9     0
PasserByVol:    0    0     0     0    0     0     0    0     0     0    0     0
Initial Fut:   19    0     4     0    0     0     0  329    19     2  190     0
User Adj:    1.00 1.00  1.00  1.00 1.00  1.00  1.00 1.00  1.00  1.00 1.00  1.00
PHF Adj:     0.95 0.95  0.95  0.95 0.95  0.95  0.95 0.95  0.95  0.95 0.95  0.95
PHF Volume:    20    0     4     0    0     0     0  346    20     2  200     0
Reduct Vol:     0    0     0     0    0     0     0    0     0     0    0     0
FinalVolume:   20    0     4     0    0     0     0  346    20     2  200     0
------------|---------------||---------------||---------------||---------------|
Critical Gap Module:
Critical Gp:  6.4  6.5   6.2 xxxxx xxxx xxxxx xxxxx xxxx xxxxx   4.1 xxxx xxxxx
FollowUpTim:  3.5  4.0   3.3 xxxxx xxxx xxxxx xxxxx xxxx xxxxx   2.2 xxxx xxxxx
------------|---------------||---------------||---------------||---------------|
Capacity Module:
Cnflict Vol:  561  561   356  xxxx xxxx xxxxx  xxxx xxxx xxxxx   366 xxxx xxxxx
Potent Cap.:  489  437   688  xxxx xxxx xxxxx  xxxx xxxx xxxxx  1192 xxxx xxxxx
Move Cap.:    488  436   688  xxxx xxxx xxxxx  xxxx xxxx xxxxx  1192 xxxx xxxxx
Volume/Cap:  0.04 0.00  0.01  xxxx xxxx  xxxx  xxxx xxxx  xxxx  0.00 xxxx  xxxx
------------|---------------||---------------||---------------||---------------|
Level Of Service Module:
2Way95thQ:   xxxx xxxx xxxxx  xxxx xxxx xxxxx  xxxx xxxx xxxxx   0.0 xxxx xxxxx
Control Del:xxxxx xxxx xxxxx xxxxx xxxx xxxxx xxxxx xxxx xxxxx   8.0 xxxx xxxxx
LOS by Move:    *    *     *     *    *     *     *    *     *     A    *     *
Movement:     LT - LTR - RT    LT - LTR - RT    LT - LTR - RT    LT - LTR - RT
Shared Cap.: xxxx  514 xxxxx  xxxx xxxx xxxxx  xxxx xxxx xxxxx  xxxx xxxx xxxxx
SharedQueue:xxxxx  0.1 xxxxx xxxxx xxxx xxxxx xxxxx xxxx xxxxx   0.0 xxxx xxxxx
Shrd ConDel:xxxxx 12.3 xxxxx xxxxx xxxx xxxxx xxxxx xxxx xxxxx   8.0 xxxx xxxxx
Shared LOS:     *    B     *     *    *     *     *    *     *     A    *     *
ApproachDel:     12.3            xxxxxx           xxxxxx           xxxxxx
ApproachLOS:         B                *                *                *
******************************************************************************
Note: Queue reported is the number of cars per lane.
******************************************************************************
```

```
------------------------------------------------------------------------------
------------------------------------------------------------------------------
                       Level Of Service Computation Report
           2000 HCM Unsignalized Method (Future Volume Alternative)
******************************************************************************
Intersection #221 SR76 & Adams Dr
******************************************************************************
Average Delay (sec/veh):      0.2       Worst Case Level Of Service: B[ 10.2]
******************************************************************************
Street Name:             Adams Dr                          SR76
Approach:      North Bound      South Bound       East Bound       West Bound
Movement:     L  -  T  -  R    L  -  T  -  R    L  -  T  -  R    L  -  T  -  R
------------|---------------||---------------||---------------||---------------|
Control:        Stop Sign        Stop Sign       Uncontrolled     Uncontrolled
Rights:           Include          Include          Include          Include
Lanes:        0  0  1! 0  0    0  0  1! 0  0    0  1  0  0  0    0  0  0  1  0
------------|---------------||---------------||---------------||---------------|
Volume Module:
Base Vol:       0    0     0     2    0     6     1  311     0     0  193     1
Growth Adj:  1.00 1.00  1.00  1.00 1.00  1.00  1.00 1.00  1.00  1.00 1.00  1.00
Initial Bse:    0    0     0     2    0     6     1  311     0     0  193     1
Added Vol:      0    0     0     0    0     0     0   22     0     0    9     0
PasserByVol:    0    0     0     0    0     0     0    0     0     0    0     0
Initial Fut:    0    0     0     2    0     6     1  333     0     0  202     1
User Adj:    1.00 1.00  1.00  1.00 1.00  1.00  1.00 1.00  1.00  1.00 1.00  1.00
PHF Adj:     0.95 0.95  0.95  0.95 0.95  0.95  0.95 0.95  0.95  0.95 0.95  0.95
PHF Volume:     0    0     0     2    0     6     1  351     0     0  213     1
Reduct Vol:     0    0     0     0    0     0     0    0     0     0    0     0
FinalVolume:    0    0     0     2    0     6     1  351     0     0  213     1
------------|---------------||---------------||---------------||---------------|
Critical Gap Module:
Critical Gp:  7.1  6.5   6.2   6.4  6.5   6.2   4.1 xxxx xxxxx xxxxx xxxx xxxxx
FollowUpTim:  3.5  4.0   3.3   3.5  4.0   3.3   2.2 xxxx xxxxx xxxxx xxxx xxxxx
------------|---------------||---------------||---------------||---------------|
Capacity Module:
Cnflict Vol:  569  566   351   566  566   213   214 xxxx xxxxx  xxxx xxxx xxxxx
Potent Cap.:  433  433   693   486  434   827  1356 xxxx xxxxx  xxxx xxxx xxxxx
Move Cap.:    429  433   693   485  433   827  1356 xxxx xxxxx  xxxx xxxx xxxxx
Volume/Cap:  0.00 0.00  0.00  0.00 0.00  0.01  0.00 xxxx  xxxx  xxxx xxxx  xxxx
------------|---------------||---------------||---------------||---------------|
Level Of Service Module:
2Way95thQ:   xxxx xxxx xxxxx  xxxx xxxx xxxxx   0.0 xxxx xxxxx  xxxx xxxx xxxxx
Control Del:xxxxx xxxx xxxxx xxxxx xxxx xxxxx   7.7 xxxx xxxxx xxxxx xxxx xxxxx
LOS by Move:    *    *     *     *    *     *     A     *     *     *    *     *
Movement:     LT - LTR - RT    LT - LTR - RT    LT - LTR - RT    LT - LTR - RT
Shared Cap.: xxxx    0 xxxxx  xxxx  703 xxxxx  xxxx xxxx xxxxx  xxxx xxxx xxxxx
SharedQueue:xxxxx xxxx xxxxx xxxxx  0.0 xxxxx   0.0 xxxx xxxxx xxxxx xxxx xxxxx
Shrd ConDel:xxxxx xxxx xxxxx xxxxx 10.2 xxxxx   7.7 xxxx xxxxx xxxxx xxxx xxxxx
Shared LOS:     *    *     *     *    B     *     A     *     *     *    *     *
ApproachDel:    xxxxxx            10.2           xxxxxx           xxxxxx
ApproachLOS:         *              B                *                *
******************************************************************************
Note: Queue reported is the number of cars per lane.
******************************************************************************
```



```
------------------------------------------------------------------------------
------------------------------------------------------------------------------
                       Level Of Service Computation Report
           2000 HCM Unsignalized Method (Future Volume Alternative)
******************************************************************************
Intersection #222 SR76 & Cole Grade Rd
******************************************************************************
Average Delay (sec/veh):      5.6       Worst Case Level Of Service: C[ 17.5]
******************************************************************************
Street Name:          Cole Grade Rd                        SR76
Approach:      North Bound      South Bound       East Bound       West Bound
Movement:     L  -  T  -  R    L  -  T  -  R    L  -  T  -  R    L  -  T  -  R
------------|---------------||---------------||---------------||---------------|
Control:        Stop Sign        Stop Sign       Uncontrolled     Uncontrolled
Rights:           Include          Include          Include          Include
Lanes:        0  0  1! 0  0    0  0  0  1  0    0  0  1! 0  0    0  0  1! 0  0
------------|---------------||---------------||---------------||---------------|
Volume Module:
Base Vol:     123    0    70     0    1     0     0  221    77    52  134     2
Growth Adj:  1.00 1.00  1.00  1.00 1.00  1.00  1.00 1.00  1.00  1.00 1.00  1.00
Initial Bse:  123    0    70     0    1     0     0  221    77    52  134     2
Added Vol:      1    0     0     0    0     1     3    5     2     0    2     0
PasserByVol:    0    0     0     0    0     0     0    0     0     0    0     0
Initial Fut:  124    0    70     0    1     1     3  226    79    52  136     2
User Adj:    1.00 1.00  1.00  1.00 1.00  1.00  1.00 1.00  1.00  1.00 1.00  1.00
PHF Adj:     0.95 0.95  0.95  0.95 0.95  0.95  0.95 0.95  0.95  0.95 0.95  0.95
PHF Volume:   131    0    74     0    1     1     3  238    83    55  143     2
Reduct Vol:     0    0     0     0    0     0     0    0     0     0    0     0
FinalVolume:  131    0    74     0    1     1     3  238    83    55  143     2
------------|---------------||---------------||---------------||---------------|
Critical Gap Module:
Critical Gp:  7.1  6.5   6.2 xxxxx  6.5   6.2   4.1 xxxx xxxxx   4.1 xxxx xxxxx
FollowUpTim:  3.5  4.0   3.3 xxxxx  4.0   3.3   2.2 xxxx xxxxx   2.2 xxxx xxxxx
------------|---------------||---------------||---------------||---------------|
Capacity Module:
Cnflict Vol:  561  561   299  xxxx  601   164   155 xxxx xxxxx   331 xxxx xxxxx
Potent Cap.:  439  437   740  xxxx  414   880  1425 xxxx xxxxx  1228 xxxx xxxxx
Move Cap.:    414  409   728  xxxx  387   866  1413 xxxx xxxxx  1218 xxxx xxxxx
Volume/Cap:  0.32 0.00  0.10  xxxx 0.00  0.00  0.00 xxxx  xxxx  0.04 xxxx  xxxx
------------|---------------||---------------||---------------||---------------|
Level Of Service Module:
2Way95thQ:   xxxx xxxx xxxxx  xxxx xxxx xxxxx   0.0 xxxx xxxxx   0.1 xxxx xxxxx
Control Del:xxxxx xxxx xxxxx xxxxx xxxx xxxxx   7.6 xxxx xxxxx   8.1 xxxx xxxxx
LOS by Move:    *    *     *     *    *     *     A     *     *     A    *     *
Movement:     LT - LTR - RT    LT - LTR - RT    LT - LTR - RT    LT - LTR - RT
Shared Cap.: xxxx  490 xxxxx  xxxx xxxx   535  xxxx xxxx xxxxx  xxxx xxxx xxxxx
SharedQueue:xxxxx  2.0 xxxxx xxxxx xxxx   0.0 xxxxx xxxx xxxxx xxxxx xxxx xxxxx
Shrd ConDel:xxxxx 17.5 xxxxx xxxxx xxxx  11.8 xxxxx xxxx xxxxx xxxxx xxxx xxxxx
Shared LOS:     *    C     *     *    *     B     *     *     *     *    *     *
ApproachDel:     17.5             11.8           xxxxxx           xxxxxx
ApproachLOS:         C              B                *                *
******************************************************************************
Note: Queue reported is the number of cars per lane.
******************************************************************************
```

Scenario Report

Scenario:	Ex PM + Proj
Command:	Default Command
Volume:	Ex PM
Geometry:	EX
Impact Fee:	Default Impact Fee
Trip Generation:	PM
Trip Distribution:	Project
Paths:	Default Path
Routes:	Default Route
Configuration:	Default Configuration

Impact Analysis Report
Level Of Service

Intersection	Base LOS	Base Del/ Veh	Base V/ C	Future LOS	Future Del/ Veh	Future V/ C	Change in
#201 SR76 & Vista Way	E	68.7	1.011	E	71.9	1.025	+ 3.156 D/V
#202 Mission Ave & River Rd	C	34.5	0.865	D	37.0	0.888	+ 2.470 D/V
#203 Mission Rd & Olive Hill Rd	D	40.7	0.937	D	42.6	0.955	+ 1.919 D/V
#204 SR76 & Mission Rd	C	31.9	0.855	C	34.1	0.882	+ 2.145 D/V
#205 SR76 & Gird Rd	B	11.6	0.649	B	12.0	0.681	+ 0.426 D/V
#206 SR76 & Old Hwy 395	C	30.8	0.744	C	31.3	0.769	+ 0.460 D/V
#207 SR76 & I-15 SB Ramps	E	59.1	1.024	E	74.6	1.096	+15.519 D/V
#208 SR76 & I-15 NB Ramps	D	51.2	0.950	E	60.1	0.997	+ 8.956 D/V
#209 SR76 & Pankey Rd	B	13.1	0.031	C	19.8	0.072	+ 6.721 D/V
#210 SR76 & Horse Ranch Creek Rd	A	0.0	0.000	D	29.7	0.289	+29.709 D/V
#211 SR76 & Rice Cyn Rd	B	13.3	0.027	D	26.7	0.198	+13.447 D/V
#212 SR76 & Couser Cyn Rd	B	14.8	0.052	C	23.9	0.099	+ 9.087 D/V
#214 SR76 & C. Drwy	A	1.0	0.215	B	11.5	0.473	+10.459 D/V
#216 SR76 & W. Pala Mission Rd	C	30.1	0.319	C	32.2	0.460	+ 2.177 D/V
#217 Pala Mission Rd & Pala Temecul	B	11.2	0.477	B	12.7	0.581	+ 0.104 V/C
#218 SR76 & Brittain Rd	B	10.1	0.003	B	10.5	0.003	+ 0.388 D/V
#219 SR76 & E. Pala Mission Rd	C	16.7	0.366	C	18.4	0.399	+ 1.723 D/V
#220 SR76 & Lilac Rd	B	13.1	0.022	C	15.7	0.073	+ 2.578 D/V
#221 SR76 & Adams Dr	B	13.4	0.014	B	13.8	0.015	+ 0.422 D/V
#222 SR76 & Cole Grade Rd	C	17.9	0.233	C	18.5	0.246	+ 0.592 D/V

Level Of Service Computation Report
2000 HCM Operations Method (Future Volume Alternative)

Intersection #201 SR76 & Vista Way

Cycle (sec): 120 Critical Vol./Cap.(X): 1.025
Loss Time (sec): 16 Average Delay (sec/veh): 71.9
Optimal Cycle: OPTIMIZED Level Of Service: E

Street Name:	SR76						Vista Way					
Approach:	North Bound			South Bound			East Bound			West Bound		
Movement:	L - T - R			L - T - R			L - T - R			L - T - R		
Control:	Protected			Protected			Protected			Protected		
Rights:	Include			Include			Include			Include		
Min. Green:	5	5	5	5	5	5	5	5	5	5	5	5
Y+R:	4.0	4.0	4.0	4.0	4.0	4.0	4.0	4.0	4.0	4.0	4.0	4.0
Lanes:	1	0	1 1	0	2	0	0 1	0	0	0 1!	0	0
Volume Module:												
Base Vol:	91	976	224	494	727	20	4	57	62	231	75	425
Growth Adj:	1.00	1.00	1.00	1.00	1.00	1.00	1.00	1.00	1.00	1.00	1.00	1.00
Initial Bse:	91	976	224	494	727	20	4	57	62	231	75	425
Added Vol:	2	22	0	3	10	0	0	1	1	0	2	6
PasserByVol:	0	0	0	0	0	0	0	0	0	0	0	0
Initial Fut:	93	998	224	497	737	20	4	58	63	231	77	431
User Adj:	1.00	1.00	1.00	1.00	1.00	1.00	1.00	1.00	1.00	1.00	1.00	1.00
PHF Adj:	0.95	0.95	0.95	0.95	0.95	0.95	0.95	0.95	0.95	0.95	0.95	0.95
PHF Volume:	98	1051	236	523	776	21	4	61	66	243	81	454
Reduct Vol:	0	0	0	0	0	0	0	0	0	0	0	0
Reduced Vol:	98	1051	236	523	776	21	4	61	66	243	81	454
PCE Adj:	1.00	1.00	1.00	1.00	1.00	1.00	1.00	1.00	1.00	1.00	1.00	1.00
MLF Adj:	1.00	1.00	1.00	1.00	1.00	1.00	1.00	1.00	1.00	1.00	1.00	1.00
FinalVolume:	98	1051	236	523	776	21	4	61	66	243	81	454
Saturation Flow Module:												
Sat/Lane:	1900	1900	1900	1900	1900	1900	1900	1900	1900	1900	1900	1900
Adjustment:	0.93	0.91	0.91	0.90	0.98	0.98	0.91	0.91	0.91	0.94	0.94	0.83
Lanes:	1.00	1.63	0.37	2.00	0.97	0.03	0.03	0.46	0.51	0.75	0.25	1.00
Final Sat.:	1769	2811	631	3432	1806	49	55	804	873	1346	449	1583
Capacity Analysis Module:												
Vol/Sat:	0.06	0.37	0.37	0.15	0.43	0.43	0.08	0.08	0.08	0.18	0.18	0.29
Crit Moves:		****		****			****					****
Green/Cycle:	0.06	0.36	0.36	0.15	0.45	0.45	0.07	0.10	0.10	0.25	0.28	0.28
Volume/Cap:	0.95	1.03	1.03	1.03	0.95	0.95	1.03	0.73	0.73	0.73	0.65	1.03
Uniform Del:	56.3	38.1	38.1	51.1	31.3	31.3	55.6	52.0	52.0	41.3	38.0	43.2
IncremntDel:	70.8	32.1	32.1	46.5	19.0	19.0	86.4	13.6	13.6	5.9	2.9	49.4
InitQueuDel:	0.0	0.0	0.0	0.0	0.0	0.0	0.0	0.0	0.0	0.0	0.0	0.0
Delay Adj:	1.00	1.00	1.00	1.00	1.00	1.00	1.00	1.00	1.00	1.00	1.00	1.00
Delay/Veh:	127.1	70.2	70.2	97.6	50.3	50.3	142.0	65.7	65.7	47.2	40.9	92.7
User DelAdj:	1.00	1.00	1.00	1.00	1.00	1.00	1.00	1.00	1.00	1.00	1.00	1.00
AdjDel/Veh:	127.1	70.2	70.2	97.6	50.3	50.3	142.0	65.7	65.7	47.2	40.9	92.7
LOS by Move:	F	E	E	F	D	D	F	E	E	D	D	F
HCM2k95thQ:	12	52	52	27	53	53	16	12	12	22	20	39

Level Of Service Computation Report
2000 HCM Operations Method (Future Volume Alternative)

Intersection #202 Mission Ave & River Rd

Cycle (sec): 140 Critical Vol./Cap.(X): 0.888
Loss Time (sec): 16 Average Delay (sec/veh): 37.0
Optimal Cycle: OPTIMIZED Level Of Service: D

Street Name:	SR76						River Rd					
Approach:	North Bound			South Bound			East Bound			West Bound		
Movement:	L - T - R			L - T - R			L - T - R			L - T - R		
Control:	Protected			Protected			Protected			Protected		
Rights:	Include			Include			Include			Include		
Min. Green:	5	5	5	5	5	5	5	5	5	5	5	5
Y+R:	4.0	4.0	4.0	4.0	4.0	4.0	4.0	4.0	4.0	4.0	4.0	4.0
Lanes:	1	0	1 0	0	0	0	0 1	0	1	0 0	1	0
Volume Module:												
Base Vol:	49	1082	0	0	883	106	259	0	128	0	0	0
Growth Adj:	1.00	1.00	1.00	1.00	1.00	1.00	1.00	1.00	1.00	1.00	1.00	1.00
Initial Bse:	49	1082	0	0	883	106	259	0	128	0	0	0
Added Vol:	0	28	0	0	12	4	8	0	0	0	0	0
PasserByVol:	0	0	0	0	0	0	0	0	0	0	0	0
Initial Fut:	49	1110	0	0	895	110	267	0	128	0	0	0
User Adj:	1.00	1.00	1.00	1.00	1.00	1.00	1.00	1.00	1.00	1.00	1.00	1.00
PHF Adj:	0.95	0.95	0.95	0.95	0.95	0.95	0.95	0.95	0.95	0.95	0.95	0.95
PHF Volume:	52	1168	0	0	942	116	281	0	135	0	0	0
Reduct Vol:	0	0	0	0	0	0	0	0	0	0	0	0
Reduced Vol:	52	1168	0	0	942	116	281	0	135	0	0	0
PCE Adj:	1.00	1.00	1.00	1.00	1.00	1.00	1.00	1.00	1.00	1.00	1.00	1.00
MLF Adj:	1.00	1.00	1.00	1.00	1.00	1.00	1.00	1.00	1.00	1.00	1.00	1.00
FinalVolume:	52	1168	0	0	942	116	281	0	135	0	0	0
Saturation Flow Module:												
Sat/Lane:	1900	1900	1900	1900	1900	1900	1900	1900	1900	1900	1900	1900
Adjustment:	0.93	0.98	1.00	1.00	0.97	0.97	0.93	1.00	0.83	1.00	1.00	1.00
Lanes:	1.00	1.00	0.00	0.00	0.89	0.11	1.00	0.00	1.00	0.00	0.00	0.00
Final Sat.:	1769	1862	0	0	1633	201	1769	0	1583	0	0	0
Capacity Analysis Module:												
Vol/Sat:	0.03	0.63	0.00	0.00	0.58	0.58	0.16	0.00	0.09	0.00	0.00	0.00
Crit Moves:		****		****			****					
Green/Cycle:	0.04	0.68	0.00	0.00	0.67	0.67	0.17	0.00	0.15	0.00	0.00	0.00
Volume/Cap:	0.70	0.93	0.00	0.00	0.86	0.86	0.93	0.00	0.58	0.00	0.00	0.00
Uniform Del:	66.2	19.5	0.0	0.0	17.8	17.8	57.1	0.0	55.8	0.0	0.0	0.0
IncremntDel:	25.9	11.5	0.0	0.0	6.2	6.2	32.7	0.0	3.7	0.0	0.0	0.0
InitQueuDel:	0.0	0.0	0.0	0.0	0.0	0.0	0.0	0.0	0.0	0.0	0.0	0.0
Delay Adj:	1.00	1.00	0.00	0.00	1.00	1.00	1.00	0.00	1.00	0.00	0.00	0.00
Delay/Veh:	92.1	31.0	0.0	0.0	24.0	24.0	89.8	0.0	59.5	0.0	0.0	0.0
User DelAdj:	1.00	1.00	1.00	1.00	1.00	1.00	1.00	1.00	1.00	1.00	1.00	1.00
AdjDel/Veh:	92.1	31.0	0.0	0.0	24.0	24.0	89.8	0.0	59.5	0.0	0.0	0.0
LOS by Move:	F	C	A	A	C	C	F	A	E	A	A	A
HCM2k95thQ:	7	72	0	0	58	58	27	0	12	0	0	0

Level Of Service Computation Report
2000 HCM Operations Method (Future Volume Alternative)

Intersection #203 Mission Rd & Olive Hill Rd

Cycle (sec): 100 Critical Vol./Cap.(X): 0.955
Loss Time (sec): 16 Average Delay (sec/veh): 42.6
Optimal Cycle: OPTIMIZED Level Of Service: D

Street Name:	SR76						Olive Hill Rd					
Approach:	North Bound			South Bound			East Bound			West Bound		
Movement:	L -	T -	R	L -	T -	R	L -	T -	R	L -	T -	R
Control:	Protected			Protected			Protected			Protected		
Rights:	Include			Include			Include			Include		
Min. Green:	5	5	5	5	5	5	5	5	5	5	5	5
Y+R:	4.0	4.0	4.0	4.0	4.0	4.0	4.0	4.0	4.0	4.0	4.0	4.0
Lanes:	1 0	1	1 0	1 0	2 0	1	1 0	1 0	1	0 1	0 0	1
Volume Module:												
Base Vol:	83	1347	50	235	889	52	125	56	51	47	73	233
Growth Adj:	1.00	1.00	1.00	1.00	1.00	1.00	1.00	1.00	1.00	1.00	1.00	1.00
Initial Bse:	83	1347	50	235	889	52	125	56	51	47	73	233
Added Vol:	0	37	0	1	17	1	2	0	0	0	0	3
PasserByVol:	0	0	0	0	0	0	0	0	0	0	0	0
Initial Fut:	83	1384	50	236	906	53	127	56	51	47	73	236
User Adj:	1.00	1.00	1.00	1.00	1.00	1.00	1.00	1.00	1.00	1.00	1.00	1.00
PHF Adj:	0.95	0.95	0.95	0.95	0.95	0.95	0.95	0.95	0.95	0.95	0.95	0.95
PHF Volume:	87	1457	53	248	954	56	134	59	54	49	77	248
Reduct Vol:	0	0	0	0	0	0	0	0	0	0	0	0
Reduced Vol:	87	1457	53	248	954	56	134	59	54	49	77	248
PCE Adj:	1.00	1.00	1.00	1.00	1.00	1.00	1.00	1.00	1.00	1.00	1.00	1.00
MLF Adj:	1.00	1.00	1.00	1.00	1.00	1.00	1.00	1.00	1.00	1.00	1.00	1.00
FinalVolume:	87	1457	53	248	954	56	134	59	54	49	77	248
Saturation Flow Module:												
Sat/Lane:	1900	1900	1900	1900	1900	1900	1900	1900	1900	1900	1900	1900
Adjustment:	0.93	0.93	0.93	0.93	0.93	0.83	0.93	0.98	0.83	0.96	0.96	0.83
Lanes:	1.00	1.93	0.07	1.00	2.00	1.00	1.00	1.00	1.00	0.39	0.61	1.00
Final Sat.:	1769	3397	123	1769	3538	1583	1769	1862	1583	715	1111	1583
Capacity Analysis Module:												
Vol/Sat:	0.05	0.43	0.43	0.14	0.27	0.04	0.08	0.03	0.03	0.07	0.07	0.16
Crit Moves:		****		****			****					****
Green/Cycle:	0.09	0.45	0.45	0.15	0.50	0.50	0.08	0.10	0.10	0.14	0.16	0.16
Volume/Cap:	0.53	0.95	0.95	0.95	0.54	0.07	0.95	0.31	0.33	0.49	0.42	0.95
Uniform Del:	43.2	26.6	26.6	42.3	16.9	12.8	45.9	41.6	41.7	39.6	37.5	41.4
IncremntDel:	3.2	13.4	13.4	43.2	0.3	0.0	62.0	0.9	1.2	1.5	1.0	43.2
InitQueuDel:	0.0	0.0	0.0	0.0	0.0	0.0	0.0	0.0	0.0	0.0	0.0	0.0
Delay Adj:	1.00	1.00	1.00	1.00	1.00	1.00	1.00	1.00	1.00	1.00	1.00	1.00
Delay/Veh:	46.5	39.9	39.9	85.5	17.2	12.8	107.9	42.5	42.9	41.1	38.5	84.6
User DelAdj:	1.00	1.00	1.00	1.00	1.00	1.00	1.00	1.00	1.00	1.00	1.00	1.00
AdjDel/Veh:	46.5	39.9	39.9	85.5	17.2	12.8	107.9	42.5	42.9	41.1	38.5	84.6
LOS by Move:	D	D	D	F	B	B	F	D	D	D	D	F
HCM2k95thQ:	7	47	47	21	19	2	14	4	4	8	8	21

Level Of Service Computation Report
2000 HCM Operations Method (Future Volume Alternative)

Intersection #204 SR76 & Mission Rd

Cycle (sec): 90 Critical Vol./Cap.(X): 0.882
Loss Time (sec): 12 Average Delay (sec/veh): 34.1
Optimal Cycle: OPTIMIZED Level Of Service: C

Street Name:	Mission Rd						SR76					
Approach:	North Bound			South Bound			East Bound			West Bound		
Movement:	L -	T -	R	L -	T -	R	L -	T -	R	L -	T -	R
Control:	Split Phase			Split Phase			Protected			Protected		
Rights:	Include			Include			Include			Include		
Min. Green:	5	5	5	5	5	5	5	5	5	5	5	5
Y+R:	4.0	4.0	4.0	4.0	4.0	4.0	4.0	4.0	4.0	4.0	4.0	4.0
Lanes:	0 0	0	0 0	2 0	0	0 2	2 0	1	0 0	0 0	2	0 1
Volume Module: >> Count Date: 25 Oct 2006 <<												
Base Vol:	0	0	0	132	0	548	732	944	0	0	638	117
Growth Adj:	1.00	1.00	1.00	1.00	1.00	1.00	1.00	1.00	1.00	1.00	1.00	1.00
Initial Bse:	0	0	0	132	0	548	732	944	0	0	638	117
Added Vol:	0	0	0	2	0	0	0	42	0	0	19	1
PasserByVol:	0	0	0	0	0	0	0	0	0	0	0	0
Initial Fut:	0	0	0	134	0	548	732	986	0	0	657	118
User Adj:	1.00	1.00	1.00	1.00	1.00	1.00	1.00	1.00	1.00	1.00	1.00	1.00
PHF Adj:	0.95	0.95	0.95	0.95	0.95	0.95	0.95	0.95	0.95	0.95	0.95	0.95
PHF Volume:	0	0	0	141	0	577	771	1038	0	0	692	124
Reduct Vol:	0	0	0	0	0	0	0	0	0	0	0	0
Reduced Vol:	0	0	0	141	0	577	771	1038	0	0	692	124
PCE Adj:	1.00	1.00	1.00	1.00	1.00	1.00	1.00	1.00	1.00	1.00	1.00	1.00
MLF Adj:	1.00	1.00	1.00	1.00	1.00	1.00	1.00	1.00	1.00	1.00	1.00	1.00
FinalVolume:	0	0	0	141	0	577	771	1038	0	0	692	124
Saturation Flow Module:												
Sat/Lane:	1900	1900	1900	1900	1900	1900	1900	1900	1900	1900	1900	1900
Adjustment:	1.00	1.00	1.00	0.90	1.00	0.73	0.90	0.98	1.00	1.00	0.93	0.83
Lanes:	0.00	0.00	0.00	2.00	0.00	2.00	2.00	1.00	0.00	0.00	2.00	1.00
Final Sat.:	0	0	0	3432	0	2786	3432	1862	0	0	3538	1583
Capacity Analysis Module:												
Vol/Sat:	0.00	0.00	0.00	0.04	0.00	0.21	0.22	0.56	0.00	0.00	0.20	0.08
Crit Moves:						****		****		****		
Green/Cycle:	0.00	0.00	0.00	0.22	0.00	0.22	0.35	0.59	0.00	0.00	0.30	0.30
Volume/Cap:	0.00	0.00	0.00	0.19	0.00	0.94	0.65	0.94	0.00	0.00	0.65	0.26
Uniform Del:	0.0	0.0	0.0	28.6	0.0	34.6	24.8	17.0	0.0	0.0	27.3	23.9
IncremntDel:	0.0	0.0	0.0	0.1	0.0	23.1	1.3	15.3	0.0	0.0	1.4	0.3
InitQueuDel:	0.0	0.0	0.0	0.0	0.0	0.0	0.0	0.0	0.0	0.0	0.0	0.0
Delay Adj:	0.00	0.00	0.00	1.00	0.00	1.00	1.00	1.00	0.00	0.00	1.00	1.00
Delay/Veh:	0.0	0.0	0.0	28.7	0.0	57.7	26.1	32.3	0.0	0.0	28.7	24.1
User DelAdj:	1.00	1.00	1.00	1.00	1.00	1.00	1.00	1.00	1.00	1.00	1.00	1.00
AdjDel/Veh:	0.0	0.0	0.0	28.7	0.0	57.7	26.1	32.3	0.0	0.0	28.7	24.1
LOS by Move:	A	A	A	C	A	E	C	C	A	A	C	C
HCM2k95thQ:	0	0	0	3	0	24	19	51	0	0	18	5

Level Of Service Computation Report
2000 HCM Operations Method (Future Volume Alternative)

Intersection #205 SR76 & Gird Rd

Cycle (sec): 90 | Critical Vol./Cap.(X): 0.681
Loss Time (sec): 12 | Average Delay (sec/veh): 12.0
Optimal Cycle: OPTIMIZED | Level Of Service: B

Street Name:	Gird Rd						SR76					
Approach:	North Bound			South Bound			East Bound			West Bound		
Movement:	L	T	R	L	T	R	L	T	R	L	T	R
Control:	Split Phase			Split Phase			Protected			Protected		
Rights:	Include			Include			Include			Include		
Min. Green:	5	5	5	5	5	5	5	5	5	5	5	5
Y+R:	4.0	4.0	4.0	4.0	4.0	4.0	4.0	4.0	4.0	4.0	4.0	4.0
Lanes:	0	0	0	0	0	1	0	0	0	1	0	1
Volume Module: >> Count Date: 18 Oct 2006 << PM Peak												
Base Vol:	0	0	0	37	0	59	103	956	0	0	674	59
Growth Adj:	1.00	1.00	1.00	1.00	1.00	1.00	1.00	1.00	1.00	1.00	1.00	1.00
Initial Bse:	0	0	0	37	0	59	103	956	0	0	674	59
Added Vol:	0	0	0	1	0	0	0	48	0	0	22	0
PasserByVol:	0	0	0	0	0	0	0	0	0	0	0	0
Initial Fut:	0	0	0	38	0	59	103	1004	0	0	696	59
User Adj:	1.00	1.00	1.00	1.00	1.00	1.00	1.00	1.00	1.00	1.00	1.00	1.00
PHF Adj:	0.95	0.95	0.95	0.95	0.95	0.95	0.95	0.95	0.95	0.95	0.95	0.95
PHF Volume:	0	0	0	40	0	62	108	1057	0	0	733	62
Reduct Vol:	0	0	0	0	0	0	0	0	0	0	0	0
Reduced Vol:	0	0	0	40	0	62	108	1057	0	0	733	62
PCE Adj:	1.00	1.00	1.00	1.00	1.00	1.00	1.00	1.00	1.00	1.00	1.00	1.00
MLF Adj:	1.00	1.00	1.00	1.00	1.00	1.00	1.00	1.00	1.00	1.00	1.00	1.00
FinalVolume:	0	0	0	40	0	62	108	1057	0	0	733	62
Saturation Flow Module:												
Sat/Lane:	1900	1900	1900	1900	1900	1900	1900	1900	1900	1900	1900	1900
Adjustment:	1.00	1.00	1.00	0.93	1.00	0.83	0.93	0.98	1.00	1.00	0.98	0.83
Lanes:	0.00	0.00	0.00	1.00	0.00	1.00	1.00	1.00	0.00	0.00	1.00	1.00
Final Sat.:	0	0	0	1769	0	1583	1769	1862	0	0	1862	1583
Capacity Analysis Module:												
Vol/Sat:	0.00	0.00	0.00	0.02	0.00	0.04	0.06	0.57	0.00	0.00	0.39	0.04
Crit Moves:				****				****		****		
Green/Cycle:	0.00	0.00	0.00	0.06	0.00	0.06	0.11	0.75	0.00	0.00	0.70	0.70
Volume/Cap:	0.00	0.00	0.00	0.39	0.00	0.68	0.56	0.75	0.00	0.00	0.56	0.06
Uniform Del:	0.0	0.0	0.0	40.9	0.0	41.6	38.1	6.3	0.0	0.0	6.7	4.2
IncremntDel:	0.0	0.0	0.0	2.5	0.0	19.0	3.8	2.4	0.0	0.0	0.6	0.0
InitQueuDel:	0.0	0.0	0.0	0.0	0.0	0.0	0.0	0.0	0.0	0.0	0.0	0.0
Delay Adj:	0.00	0.00	0.00	1.00	0.00	1.00	1.00	1.00	0.00	0.00	1.00	1.00
Delay/Veh:	0.0	0.0	0.0	43.4	0.0	60.6	41.8	8.7	0.0	0.0	7.2	4.2
User DelAdj:	1.00	1.00	1.00	1.00	1.00	1.00	1.00	1.00	1.00	1.00	1.00	1.00
AdjDel/Veh:	0.0	0.0	0.0	43.4	0.0	60.6	41.8	8.7	0.0	0.0	7.2	4.2
LOS by Move:	A	A	A	D	A	E	D	A	A	A	A	A
HCM2k95thQ:	0	0	0	3	0	6	7	31	0	0	19	1

Level Of Service Computation Report
2000 HCM Operations Method (Future Volume Alternative)

Intersection #206 SR76 & Old Hwy 395

Cycle (sec): 90 | Critical Vol./Cap.(X): 0.769
Loss Time (sec): 16 | Average Delay (sec/veh): 31.3
Optimal Cycle: OPTIMIZED | Level Of Service: C

Street Name:	Old Hwy 395						SR76					
Approach:	North Bound			South Bound			East Bound			West Bound		
Movement:	L	T	R	L	T	R	L	T	R	L	T	R
Control:	Split Phase			Split Phase			Protected			Protected		
Rights:	Include			Include			Include			Include		
Min. Green:	5	5	5	5	5	5	5	5	5	5	5	5
Y+R:	4.0	4.0	4.0	4.0	4.0	4.0	4.0	4.0	4.0	4.0	4.0	4.0
Lanes:	1	0	0	1	0	0	0	1!	0	0	1	0
Volume Module: >> Count Date: 25 Oct 2006 << PM Peak												
Base Vol:	64	98	38	227	73	56	66	844	73	72	595	233
Growth Adj:	1.00	1.00	1.00	1.00	1.00	1.00	1.00	1.00	1.00	1.00	1.00	1.00
Initial Bse:	64	98	38	227	73	56	66	844	73	72	595	233
Added Vol:	0	0	5	1	0	0	0	54	0	2	24	0
PasserByVol:	0	0	0	0	0	0	0	0	0	0	0	0
Initial Fut:	64	98	43	228	73	56	66	898	73	74	619	233
User Adj:	1.00	1.00	1.00	1.00	1.00	1.00	1.00	1.00	1.00	1.00	1.00	1.00
PHF Adj:	0.95	0.95	0.95	0.95	0.95	0.95	0.95	0.95	0.95	0.95	0.95	0.95
PHF Volume:	67	103	45	240	77	59	69	945	77	78	652	245
Reduct Vol:	0	0	0	0	0	0	0	0	0	0	0	0
Reduced Vol:	67	103	45	240	77	59	69	945	77	78	652	245
PCE Adj:	1.00	1.00	1.00	1.00	1.00	1.00	1.00	1.00	1.00	1.00	1.00	1.00
MLF Adj:	1.00	1.00	1.00	1.00	1.00	1.00	1.00	1.00	1.00	1.00	1.00	1.00
FinalVolume:	67	103	45	240	77	59	69	945	77	78	652	245
Saturation Flow Module:												
Sat/Lane:	1900	1900	1900	1900	1900	1900	1900	1900	1900	1900	1900	1900
Adjustment:	0.93	0.93	0.93	0.93	0.93	0.93	0.93	0.92	0.92	0.93	0.93	0.83
Lanes:	1.00	0.70	0.30	0.64	0.20	0.16	1.00	1.85	0.15	1.00	2.00	1.00
Final Sat.:	1769	1235	542	1128	361	277	1769	3236	263	1769	3538	1575
Capacity Analysis Module:												
Vol/Sat:	0.04	0.08	0.08	0.21	0.21	0.21	0.04	0.29	0.29	0.04	0.18	0.16
Crit Moves:			****		****			****		****		
Green/Cycle:	0.11	0.11	0.11	0.28	0.28	0.28	0.10	0.38	0.38	0.06	0.34	0.34
Volume/Cap:	0.35	0.77	0.77	0.77	0.77	0.77	0.39	0.77	0.77	0.77	0.55	0.46
Uniform Del:	37.2	39.0	39.0	29.9	29.9	29.9	37.8	24.5	24.5	41.8	24.3	23.5
IncremntDel:	1.1	17.0	17.0	7.3	7.3	7.3	1.4	2.8	2.8	29.4	0.5	0.6
InitQueuDel:	0.0	0.0	0.0	0.0	0.0	0.0	0.0	0.0	0.0	0.0	0.0	0.0
Delay Adj:	1.00	1.00	1.00	1.00	1.00	1.00	1.00	1.00	1.00	1.00	1.00	1.00
Delay/Veh:	38.3	56.0	56.0	37.2	37.2	37.2	39.2	27.3	27.3	71.2	24.9	24.2
User DelAdj:	1.00	1.00	1.00	1.00	1.00	1.00	1.00	1.00	1.00	1.00	1.00	1.00
AdjDel/Veh:	38.3	56.0	56.0	37.2	37.2	37.2	39.2	27.3	27.3	71.2	24.9	24.2
LOS by Move:	D	E	E	D	D	D	D	C	C	E	C	C
HCM2k95thQ:	4	11	11	21	21	21	5	26	26	5	14	10

Level Of Service Computation Report
2000 HCM Operations Method (Future Volume Alternative)

Intersection #207 SR76 & I-15 SB Ramps

Cycle (sec): 125 Critical Vol./Cap.(X): 1.096
Loss Time (sec): 12 Average Delay (sec/veh): 74.6
Optimal Cycle: OPTIMIZED Level Of Service: E

Street Name:	I-15 SB Ramps									SR76		
Approach:	North Bound			South Bound			East Bound			West Bound		
Movement:	L	T	R	L	T	R	L	T	R	L	T	R
Control:	Split Phase			Split Phase			Protected			Protected		
Rights:	Include			Include			Include			Include		
Min. Green:	5	5	5	5	5	5	5	5	5	5	5	5
Y+R:	4.0	4.0	4.0	4.0	4.0	4.0	4.0	4.0	4.0	4.0	4.0	4.0
Lanes:	0	0	0	0	0	0	0	1	0	0	1	0
Volume Module: >> Count Date: 25 Oct 2006 << PM Peak												
Base Vol:	0	0	0	93	8	500	0	892	290	149	524	0
Growth Adj:	1.00	1.00	1.00	1.00	1.00	1.00	1.00	1.00	1.00	1.00	1.00	1.00
Initial Bse:	0	0	0	93	8	500	0	892	290	149	524	0
Added Vol:	0	0	0	12	0	0	0	60	0	53	27	0
PasserByVol:	0	0	0	0	0	0	0	0	0	0	0	0
Initial Fut:	0	0	0	105	8	500	0	952	290	202	551	0
User Adj:	1.00	1.00	1.00	1.00	1.00	1.00	1.00	1.00	1.00	1.00	1.00	1.00
PHF Adj:	0.95	0.95	0.95	0.95	0.95	0.95	0.95	0.95	0.95	0.95	0.95	0.95
PHF Volume:	0	0	0	111	8	526	0	1002	305	213	580	0
Reduct Vol:	0	0	0	0	0	0	0	0	0	0	0	0
Reduced Vol:	0	0	0	111	8	526	0	1002	305	213	580	0
PCE Adj:	1.00	1.00	1.00	1.00	1.00	1.00	1.00	1.00	1.00	1.00	1.00	1.00
MLF Adj:	1.00	1.00	1.00	1.00	1.00	1.00	1.00	1.00	1.00	1.00	1.00	1.00
FinalVolume:	0	0	0	111	8	526	0	1002	305	213	580	0
Saturation Flow Module:												
Sat/Lane:	1900	1900	1900	1900	1900	1900	1900	1900	1900	1900	1900	1900
Adjustment:	1.00	1.00	1.00	0.95	0.95	0.83	1.00	0.98	0.83	0.93	0.98	1.00
Lanes:	0.00	0.00	0.00	0.93	0.07	1.00	0.00	1.00	1.00	1.00	1.00	0.00
Final Sat.:	0	0	0	1685	128	1583	0	1862	1583	1769	1862	0
Capacity Analysis Module:												
Vol/Sat:	0.00	0.00	0.00	0.07	0.07	0.33	0.00	0.54	0.19	0.12	0.31	0.00
Crit Moves:						****		****		****		
Green/Cycle:	0.00	0.00	0.00	0.30	0.30	0.30	0.00	0.49	0.49	0.11	0.53	0.00
Volume/Cap:	0.00	0.00	0.00	0.22	0.22	1.10	0.00	1.10	0.39	1.10	0.59	0.00
Uniform Del:	0.0	0.0	0.0	32.5	32.5	43.5	0.0	31.8	20.1	55.6	19.9	0.0
IncremntDel:	0.0	0.0	0.0	0.2	0.2	69.8	0.0	59.6	0.3	92.7	0.9	0.0
InitQueuDel:	0.0	0.0	0.0	0.0	0.0	0.0	0.0	0.0	0.0	0.0	0.0	0.0
Delay Adj:	0.00	0.00	0.00	1.00	1.00	1.00	0.00	1.00	1.00	1.00	1.00	0.00
Delay/Veh:	0.0	0.0	0.0	32.7	32.7	113.3	0.0	91.4	20.4	148.3	20.8	0.0
User DelAdj:	1.00	1.00	1.00	1.00	1.00	1.00	1.00	1.00	1.00	1.00	1.00	1.00
AdjDel/Veh:	0.0	0.0	0.0	32.7	32.7	113.3	0.0	91.4	20.4	148.3	20.8	0.0
LOS by Move:	A	A	A	C	C	F	A	F	C	F	C	A
HCM2k95thQ:	0	0	0	7	7	48	0	76	13	18	25	0

Level Of Service Computation Report
2000 HCM Operations Method (Future Volume Alternative)

Intersection #208 SR76 & I-15 NB Ramps

Cycle (sec): 100 Critical Vol./Cap.(X): 0.997
Loss Time (sec): 12 Average Delay (sec/veh): 60.1
Optimal Cycle: OPTIMIZED Level Of Service: E

Street Name:	I-15 NB Ramps									SR76		
Approach:	North Bound			South Bound			East Bound			West Bound		
Movement:	L	T	R	L	T	R	L	T	R	L	T	R
Control:	Split Phase			Split Phase			Protected			Protected		
Rights:	Include			Include			Include			Include		
Min. Green:	5	5	5	5	5	5	5	5	5	5	5	5
Y+R:	4.0	4.0	4.0	4.0	4.0	4.0	4.0	4.0	4.0	4.0	4.0	4.0
Lanes:	0	1	0	0	1	0	0	0	0	1	0	1
Volume Module:PM Peak												
Base Vol:	352	6	162	0	0	0	719	210	0	0	324	92
Growth Adj:	1.00	1.00	1.00	1.00	1.00	1.00	1.00	1.00	1.00	1.00	1.00	1.00
Initial Bse:	352	6	162	0	0	0	719	210	0	0	324	92
Added Vol:	0	0	119	0	0	0	0	72	0	0	80	5
PasserByVol:	0	0	0	0	0	0	0	0	0	0	0	0
Initial Fut:	352	6	281	0	0	0	719	282	0	0	404	97
User Adj:	1.00	1.00	1.00	1.00	1.00	1.00	1.00	1.00	1.00	1.00	1.00	1.00
PHF Adj:	0.95	0.95	0.95	0.95	0.95	0.95	0.95	0.95	0.95	0.95	0.95	0.95
PHF Volume:	371	6	296	0	0	0	757	297	0	0	425	102
Reduct Vol:	0	0	0	0	0	0	0	0	0	0	0	0
Reduced Vol:	371	6	296	0	0	0	757	297	0	0	425	102
PCE Adj:	1.00	1.00	1.00	1.00	1.00	1.00	1.00	1.00	1.00	1.00	1.00	1.00
MLF Adj:	1.00	1.00	1.00	1.00	1.00	1.00	1.00	1.00	1.00	1.00	1.00	1.00
FinalVolume:	371	6	296	0	0	0	757	297	0	0	425	102
Saturation Flow Module:												
Sat/Lane:	1900	1900	1900	1900	1900	1900	1900	1900	1900	1900	1900	1900
Adjustment:	0.90	0.90	0.83	1.00	1.00	1.00	0.93	0.98	1.00	1.00	0.98	0.83
Lanes:	0.98	0.02	1.00	0.00	0.00	0.00	1.00	1.00	0.00	0.00	1.00	1.00
Final Sat.:	1679	29	1583	0	0	0	1769	1862	0	0	1862	1583
Capacity Analysis Module:												
Vol/Sat:	0.22	0.22	0.19	0.00	0.00	0.00	0.43	0.16	0.00	0.00	0.23	0.06
Crit Moves:	****						****				****	
Green/Cycle:	0.22	0.22	0.22	0.00	0.00	0.00	0.43	0.50	0.00	0.00	0.23	0.23
Volume/Cap:	1.00	1.00	0.84	0.00	0.00	0.00	1.00	0.32	0.00	0.00	1.00	0.28
Uniform Del:	38.9	38.9	37.3	0.0	0.0	0.0	28.5	14.8	0.0	0.0	38.5	31.8
IncremntDel:	45.3	45.3	16.8	0.0	0.0	0.0	31.7	0.2	0.0	0.0	42.6	0.4
InitQueuDel:	0.0	0.0	0.0	0.0	0.0	0.0	0.0	0.0	0.0	0.0	0.0	0.0
Delay Adj:	1.00	1.00	1.00	0.00	0.00	0.00	1.00	1.00	0.00	0.00	1.00	1.00
Delay/Veh:	84.2	84.2	54.1	0.0	0.0	0.0	60.2	15.0	0.0	0.0	81.1	32.2
User DelAdj:	1.00	1.00	1.00	1.00	1.00	1.00	1.00	1.00	1.00	1.00	1.00	1.00
AdjDel/Veh:	84.2	84.2	54.1	0.0	0.0	0.0	60.2	15.0	0.0	0.0	81.1	32.2
LOS by Move:	F	F	D	A	A	A	E	B	A	A	F	C
HCM2k95thQ:	30	30	21	0	0	0	39	10	0	0	32	5

```
------------------------------------------------------------------------------
------------------------------------------------------------------------------
                       Level Of Service Computation Report
           2000 HCM Unsignalized Method (Future Volume Alternative)
******************************************************************************
Intersection #209 SR76 & Pankey Rd
******************************************************************************
Average Delay (sec/veh):      1.0       Worst Case Level Of Service: C[ 19.8]
******************************************************************************
Street Name:             Pankey Rd                          SR76
Approach:       North Bound      South Bound       East Bound       West Bound
Movement:     L  -  T  -  R    L  -  T  -  R    L  -  T  -  R    L  -  T  -  R
------------|---------------||---------------||---------------||---------------|
Control:        Stop Sign        Stop Sign       Uncontrolled     Uncontrolled
Rights:           Include          Include          Include          Include
Lanes:        0  0  1! 0  0    0  0  1! 0  0    1  0  1  1  0    1  0  1  1  0
------------|---------------||---------------||---------------||---------------|
Volume Module: >> Count Date: 25 Oct 2006 <<
Base Vol:      10    0     9     2    0     5     0  360    32     9  414     1
Growth Adj:  1.00 1.00  1.00  1.00 1.00  1.00  1.00 1.00  1.00  1.00 1.00  1.00
Initial Bse:   10    0     9     2    0     5     0  360    32     9  414     1
Added Vol:      0    0    28    13    0     0     0  191     0    12   85     6
PasserByVol:    0    0     0     0    0     0     0    0     0     0    0     0
Initial Fut:   10    0    37    15    0     5     0  551    32    21  499     7
User Adj:    1.00 1.00  1.00  1.00 1.00  1.00  1.00 1.00  1.00  1.00 1.00  1.00
PHF Adj:     0.95 0.95  0.95  0.95 0.95  0.95  0.95 0.95  0.95  0.95 0.95  0.95
PHF Volume:    11    0    39    16    0     5     0  580    34    22  525     7
Reduct Vol:     0    0     0     0    0     0     0    0     0     0    0     0
FinalVolume:   11    0    39    16    0     5     0  580    34    22  525     7
------------|---------------||---------------||---------------||---------------|
Critical Gap Module:
Critical Gp:  7.5  6.5   6.9   7.5  6.5   6.9 xxxxx xxxx xxxxx   4.1 xxxx xxxxx
FollowUpTim:  3.5  4.0   3.3   3.5  4.0   3.3 xxxxx xxxx xxxxx   2.2 xxxx xxxxx
------------|---------------||---------------||---------------||---------------|
Capacity Module:
Cnflict Vol:  924 1194   327   883 1207   286  xxxx xxxx xxxxx   624 xxxx xxxxx
Potent Cap.:  224  185   669   240  182   710  xxxx xxxx xxxxx   953 xxxx xxxxx
Move Cap.:    215  178   658   218  175   699  xxxx xxxx xxxxx   946 xxxx xxxxx
Volume/Cap:  0.05 0.00  0.06  0.07 0.00  0.01  xxxx xxxx  xxxx  0.02 xxxx  xxxx
------------|---------------||---------------||---------------||---------------|
Level Of Service Module:
2Way95thQ:   xxxx xxxx xxxxx  xxxx xxxx xxxxx  xxxx xxxx xxxxx   0.1 xxxx xxxxx
Control Del:xxxxx xxxx xxxxx xxxxx xxxx xxxxx xxxxx xxxx xxxxx   8.9 xxxx xxxxx
LOS by Move:    *    *     *     *    *     *     *    *     *     A    *     *
Movement:     LT - LTR - RT    LT - LTR - RT    LT - LTR - RT    LT - LTR - RT
Shared Cap.: xxxx  457 xxxxx  xxxx  264 xxxxx  xxxx xxxx xxxxx  xxxx xxxx xxxxx
SharedQueue:xxxxx  0.4 xxxxx xxxxx  0.3 xxxxx xxxxx xxxx xxxxx xxxxx xxxx xxxxx
Shrd ConDel:xxxxx 13.8 xxxxx xxxxx 19.8 xxxxx xxxxx xxxx xxxxx xxxxx xxxx xxxxx
Shared LOS:     *    B     *     *    C     *     *    *     *     *    *     *
ApproachDel:       13.8             19.8            xxxxxx            xxxxxx
ApproachLOS:          B                C                 *                 *
******************************************************************************
Note: Queue reported is the number of cars per lane.
******************************************************************************
```



```
------------------------------------------------------------------------------
------------------------------------------------------------------------------
                       Level Of Service Computation Report
           2000 HCM Unsignalized Method (Future Volume Alternative)
******************************************************************************
Intersection #210 SR76 & Horse Ranch Creek Rd
******************************************************************************
Average Delay (sec/veh):      1.4       Worst Case Level Of Service: D[ 29.7]
******************************************************************************
Street Name:       Horse Ranch Creek Rd                     SR76
Approach:       North Bound      South Bound       East Bound       West Bound
Movement:     L  -  T  -  R    L  -  T  -  R    L  -  T  -  R    L  -  T  -  R
------------|---------------||---------------||---------------||---------------|
Control:        Stop Sign        Stop Sign       Uncontrolled     Uncontrolled
Rights:           Include          Include          Include          Include
Lanes:        0  0  1! 0  0    1  0  0  0  0    0  0  1  0  0    0  0  0  1  0
------------|---------------||---------------||---------------||---------------|
Volume Module:
Base Vol:       0    0     0     0    0     0     0  371     0     0  424     0
Growth Adj:  1.00 1.00  1.00  1.00 1.00  1.00  1.00 1.00  1.00  1.00 1.00  1.00
Initial Bse:    0    0     0     0    0     0     0  371     0     0  424     0
Added Vol:      0    0     0    56    0     0     0  232     0     0  103    25
PasserByVol:    0    0     0     0    0     0     0    0     0     0    0     0
Initial Fut:    0    0     0    56    0     0     0  603     0     0  527    25
User Adj:    1.00 1.00  1.00  1.00 1.00  1.00  1.00 1.00  1.00  1.00 1.00  1.00
PHF Adj:     0.95 0.95  0.95  0.95 0.95  0.95  0.95 0.95  0.95  0.95 0.95  0.95
PHF Volume:     0    0     0    59    0     0     0  635     0     0  555    26
Reduct Vol:     0    0     0     0    0     0     0    0     0     0    0     0
FinalVolume:    0    0     0    59    0     0     0  635     0     0  555    26
------------|---------------||---------------||---------------||---------------|
Critical Gap Module:
Critical Gp:  7.1  6.5   6.2   6.4 xxxx xxxxx xxxxx xxxx xxxxx xxxxx xxxx xxxxx
FollowUpTim:  3.5  4.0   3.3   3.5 xxxx xxxxx xxxxx xxxx xxxxx xxxxx xxxx xxxxx
------------|---------------||---------------||---------------||---------------|
Capacity Module:
Cnflict Vol: 1203 1216   635  1203 xxxx xxxxx  xxxx xxxx xxxxx  xxxx xxxx xxxxx
Potent Cap.:  161  181   479   204 xxxx xxxxx  xxxx xxxx xxxxx  xxxx xxxx xxxxx
Move Cap.:    161  181   479   204 xxxx xxxxx  xxxx xxxx xxxxx  xxxx xxxx xxxxx
Volume/Cap:  0.00 0.00  0.00  0.29 xxxx  xxxx  xxxx xxxx  xxxx  xxxx xxxx  xxxx
------------|---------------||---------------||---------------||---------------|
Level Of Service Module:
2Way95thQ:   xxxx xxxx xxxxx   1.1 xxxx xxxxx  xxxx xxxx xxxxx  xxxx xxxx xxxxx
Control Del:xxxxx xxxx xxxxx  29.7 xxxx xxxxx xxxxx xxxx xxxxx xxxxx xxxx xxxxx
LOS by Move:    *    *     *     D    *     *     *    *     *     *    *     *
Movement:     LT - LTR - RT    LT - LTR - RT    LT - LTR - RT    LT - LTR - RT
Shared Cap.: xxxx    0 xxxxx  xxxx xxxx xxxxx  xxxx xxxx xxxxx  xxxx xxxx xxxxx
SharedQueue:xxxxx xxxx xxxxx xxxxx xxxx xxxxx xxxxx xxxx xxxxx xxxxx xxxx xxxxx
Shrd ConDel:xxxxx xxxx xxxxx xxxxx xxxx xxxxx xxxxx xxxx xxxxx xxxxx xxxx xxxxx
Shared LOS:     *    *     *     *    *     *     *    *     *     *    *     *
ApproachDel:    xxxxxx            29.7            xxxxxx            xxxxxx
ApproachLOS:         *               D                 *                 *
******************************************************************************
Note: Queue reported is the number of cars per lane.
******************************************************************************
```

Level Of Service Computation Report
2000 HCM Unsignalized Method (Future Volume Alternative)

Intersection #211 SR76 & Rice Cyn Rd

Average Delay (sec/veh): 1.2 Worst Case Level Of Service: D[26.7]

Street Name:	Rice Cyn Rd									SR76						
Approach:	North Bound				South Bound				East Bound				West Bound			
Movement:	L	-	T	-	R	L	-	T	-	R	L	-	T	-	R	L	-	T	-	R
Control:	Stop Sign					Stop Sign					Uncontrolled					Uncontrolled				
Rights:	Include					Include					Include					Include				
Lanes:	0	0	0	0	0	0	0	1!	0	0	0	1	0	0	0	0	0	0	1	0
Volume Module: >> Count Date: 19 Oct 2006 <<																				
Base Vol:	0	0	0	7	0	15	22	329	0	0	420	17								
Growth Adj:	1.00	1.00	1.00	1.00	1.00	1.00	1.00	1.00	1.00	1.00	1.00	1.00								
Initial Bse:	0	0	0	7	0	15	22	329	0	0	420	17								
Added Vol:	0	0	0	25	0	0	0	287	0	0	128	11								
PasserByVol:	0	0	0	0	0	0	0	0	0	0	0	0								
Initial Fut:	0	0	0	32	0	15	22	616	0	0	548	28								
User Adj:	1.00	1.00	1.00	1.00	1.00	1.00	1.00	1.00	1.00	1.00	1.00	1.00								
PHF Adj:	0.95	0.95	0.95	0.95	0.95	0.95	0.95	0.95	0.95	0.95	0.95	0.95								
PHF Volume:	0	0	0	34	0	16	23	648	0	0	577	29								
Reduct Vol:	0	0	0	0	0	0	0	0	0	0	0	0								
FinalVolume:	0	0	0	34	0	16	23	648	0	0	577	29								
Critical Gap Module:																				
Critical Gp:	xxxxx	xxxx	xxxxx	6.4	6.5	6.2	4.1	xxxx	xxxxx	xxxxx	xxxx	xxxxx								
FollowUpTim:	xxxxx	xxxx	xxxxx	3.5	4.0	3.3	2.2	xxxx	xxxxx	xxxxx	xxxx	xxxxx								
Capacity Module:																				
Cnflict Vol:	xxxx	xxxx	xxxxx	1306	1306	612	616	xxxx	xxxxx	xxxx	xxxx	xxxxx								
Potent Cap.:	xxxx	xxxx	xxxxx	176	160	493	964	xxxx	xxxxx	xxxx	xxxx	xxxxx								
Move Cap.:	xxxx	xxxx	xxxxx	170	153	485	955	xxxx	xxxxx	xxxx	xxxx	xxxxx								
Volume/Cap:	xxxx	xxxx	xxxx	0.20	0.00	0.03	0.02	xxxx	xxxx	xxxx	xxxx	xxxx								
Level Of Service Module:																				
2Way95thQ:	xxxx	xxxx	xxxxx	xxxx	xxxx	xxxxx	0.1	xxxx	xxxxx	xxxx	xxxx	xxxxx								
Control Del:	xxxxx	xxxx	xxxxx	xxxxx	xxxx	xxxxx	8.9	xxxx	xxxxx	xxxxx	xxxx	xxxxx								
LOS by Move:	*	*	*	*	*	*	A	*	*	*	*	*								
Movement:	LT -	LTR -	RT	LT -	LTR -	RT	LT -	LTR -	RT	LT -	LTR -	RT								
Shared Cap.:	xxxx	xxxx	xxxxx	xxxx	215	xxxxx	xxxx	xxxx	xxxxx	xxxx	xxxx	xxxxx								
SharedQueue:	xxxxx	xxxx	xxxxx	xxxxx	0.9	xxxxx	0.1	xxxx	xxxxx	xxxxx	xxxx	xxxxx								
Shrd ConDel:	xxxxx	xxxx	xxxxx	xxxxx	26.7	xxxxx	8.9	xxxx	xxxxx	xxxxx	xxxx	xxxxx								
Shared LOS:	*	*	*	*	D	*	A	*	*	*	*	*								
ApproachDel:	xxxxxx			26.7			xxxxxx			xxxxxx										
ApproachLOS:	*			D			*			*										

Note: Queue reported is the number of cars per lane.

Level Of Service Computation Report
2000 HCM Unsignalized Method (Future Volume Alternative)

Intersection #212 SR76 & Couser Cyn Rd

Average Delay (sec/veh): 0.5 Worst Case Level Of Service: C[23.9]

Street Name:	Couser Cyn Rd									SR76						
Approach:	North Bound				South Bound				East Bound				West Bound			
Movement:	L	-	T	-	R	L	-	T	-	R	L	-	T	-	R	L	-	T	-	R
Control:	Stop Sign					Stop Sign					Uncontrolled					Uncontrolled				
Rights:	Include					Include					Include					Include				
Lanes:	0	0	1!	0	0	0	0	1!	0	0	0	0	1	0	0	1	0	0	0	0
Volume Module:																				
Base Vol:	16	0	8	0	0	0	0	325	13	10	429	0								
Growth Adj:	1.00	1.00	1.00	1.00	1.00	1.00	1.00	1.00	1.00	1.00	1.00	1.00								
Initial Bse:	16	0	8	0	0	0	0	325	13	10	429	0								
Added Vol:	0	0	1	0	0	0	0	312	0	0	139	0								
PasserByVol:	0	0	0	0	0	0	0	0	0	0	0	0								
Initial Fut:	16	0	9	0	0	0	0	637	13	10	568	0								
User Adj:	1.00	1.00	1.00	1.00	1.00	1.00	1.00	1.00	1.00	1.00	1.00	1.00								
PHF Adj:	0.95	0.95	0.95	0.95	0.95	0.95	0.95	0.95	0.95	0.95	0.95	0.95								
PHF Volume:	17	0	9	0	0	0	0	671	14	11	598	0								
Reduct Vol:	0	0	0	0	0	0	0	0	0	0	0	0								
FinalVolume:	17	0	9	0	0	0	0	671	14	11	598	0								
Critical Gap Module:																				
Critical Gp:	6.4	6.5	6.2	7.1	6.5	6.2	xxxxx	xxxx	xxxxx	4.1	xxxx	xxxxx								
FollowUpTim:	3.5	4.0	3.3	3.5	4.0	3.3	xxxxx	xxxx	xxxxx	2.2	xxxx	xxxxx								
Capacity Module:																				
Cnflict Vol:	1316	1316	697	1321	1323	618	xxxx	xxxx	xxxxx	694	xxxx	xxxxx								
Potent Cap.:	174	158	441	134	156	489	xxxx	xxxx	xxxxx	901	xxxx	xxxxx								
Move Cap.:	169	153	434	127	152	481	xxxx	xxxx	xxxxx	894	xxxx	xxxxx								
Volume/Cap:	0.10	0.00	0.02	0.00	0.00	0.00	xxxx	xxxx	xxxx	0.01	xxxx	xxxx								
Level Of Service Module:																				
2Way95thQ:	xxxx	xxxx	xxxxx	xxxx	xxxx	xxxxx	xxxx	xxxx	xxxxx	0.0	xxxx	xxxxx								
Control Del:	xxxxx	xxxx	xxxxx	xxxxx	xxxx	xxxxx	xxxxx	xxxx	xxxxx	9.1	xxxx	xxxxx								
LOS by Move:	*	*	*	*	*	*	*	*	*	A	*	*								
Movement:	LT -	LTR -	RT	LT -	LTR -	RT	LT -	LTR -	RT	LT -	LTR -	RT								
Shared Cap.:	xxxx	217	xxxxx	xxxx	0	xxxxx	xxxx	xxxx	xxxxx	xxxx	xxxx	xxxxx								
SharedQueue:	xxxxx	0.4	xxxxx	xxxxx	xxxx	xxxxx	xxxxx	xxxx	xxxxx	0.0	xxxx	xxxxx								
Shrd ConDel:	xxxxx	23.9	xxxxx	xxxxx	xxxx	xxxxx	xxxxx	xxxx	xxxxx	9.1	xxxx	xxxxx								
Shared LOS:	*	C	*	*	*	*	*	*	*	A	*	*								
ApproachDel:	23.9			xxxxxx			xxxxxx			xxxxxx										
ApproachLOS:	C			*			*			*										

Note: Queue reported is the number of cars per lane.

Level Of Service Computation Report
2000 HCM Operations Method (Future Volume Alternative)

Intersection #214 SR76 & C. Drwy

Cycle (sec): 90 Critical Vol./Cap.(X): 0.473
Loss Time (sec): 12 Average Delay (sec/veh): 11.5
Optimal Cycle: OPTIMIZED Level Of Service: B

Street Name:	C. Drwy									SR76					
Approach:	North Bound			South Bound			East Bound			West Bound					
Movement:	L	-	T	-	R	L	-	T	-	R	L	-	T	-	R	L	-	T	-	R
Control:	Protected			Protected			Permitted			Permitted					
Rights:	Include			Include			Include			Include					
Min. Green:	5	5	5	5	5	5	5	5	5	5	5	5			
Y+R:	4.0	4.0	4.0	4.0	4.0	4.0	4.0	4.0	4.0	4.0	4.0	4.0			
Lanes:	0	0	1!	0	0	1	0	0	0	1	1	0	1	0	0	0	0	1	0	1
Volume Module:															
Base Vol:	0	0	0	0	0	0	0	329	0	0	264	0			
Growth Adj:	1.00	1.00	1.00	1.00	1.00	1.00	1.00	1.00	1.00	1.00	1.00	1.00			
Initial Bse:	0	0	0	0	0	0	0	329	0	0	264	0			
Added Vol:	0	0	0	90	0	144	323	0	0	0	0	201			
PasserByVol:	0	0	0	0	0	0	0	0	0	0	0	0			
Initial Fut:	0	0	0	90	0	144	323	329	0	0	264	201			
User Adj:	1.00	1.00	1.00	1.00	1.00	1.00	1.00	1.00	1.00	1.00	1.00	1.00			
PHF Adj:	0.95	0.95	0.95	0.95	0.95	0.95	0.95	0.95	0.95	0.95	0.95	0.95			
PHF Volume:	0	0	0	95	0	152	340	346	0	0	278	212			
Reduct Vol:	0	0	0	0	0	0	0	0	0	0	0	0			
Reduced Vol:	0	0	0	95	0	152	340	346	0	0	278	212			
PCE Adj:	1.00	1.00	1.00	1.00	1.00	1.00	1.00	1.00	1.00	1.00	1.00	1.00			
MLF Adj:	1.00	1.00	1.00	1.00	1.00	1.00	1.00	1.00	1.00	1.00	1.00	1.00			
FinalVolume:	0	0	0	95	0	152	340	346	0	0	278	212			
Saturation Flow Module:															
Sat/Lane:	1900	1900	1900	1900	1900	1900	1900	1900	1900	1900	1900	1900			
Adjustment:	1.00	1.00	1.00	0.93	1.00	0.83	0.57	0.98	1.00	1.00	0.98	0.83			
Lanes:	0.00	1.00	0.00	1.00	0.00	1.00	1.00	1.00	0.00	0.00	1.00	1.00			
Final Sat.:	0	1900	0	1769	0	1583	1084	1862	0	0	1862	1583			
Capacity Analysis Module:															
Vol/Sat:	0.00	0.00	0.00	0.05	0.00	0.10	0.31	0.19	0.00	0.00	0.15	0.13			
Crit Moves:						****	****								
Green/Cycle:	0.00	0.00	0.00	0.13	0.00	0.20	0.66	0.66	0.00	0.00	0.66	0.66			
Volume/Cap:	0.00	0.00	0.00	0.41	0.00	0.47	0.47	0.28	0.00	0.00	0.22	0.20			
Uniform Del:	0.0	0.0	0.0	36.1	0.0	31.6	7.4	6.2	0.0	0.0	6.0	5.9			
IncremntDel:	0.0	0.0	0.0	1.2	0.0	1.1	0.5	0.1	0.0	0.0	0.1	0.1			
InitQueuDel:	0.0	0.0	0.0	0.0	0.0	0.0	0.0	0.0	0.0	0.0	0.0	0.0			
Delay Adj:	0.00	0.00	0.00	1.00	0.00	1.00	1.00	1.00	0.00	0.00	1.00	1.00			
Delay/Veh:	0.0	0.0	0.0	37.3	0.0	32.7	7.9	6.4	0.0	0.0	6.1	6.0			
User DelAdj:	1.00	1.00	1.00	1.00	1.00	1.00	1.00	1.00	1.00	1.00	1.00	1.00			
AdjDel/Veh:	0.0	0.0	0.0	37.3	0.0	32.7	7.9	6.4	0.0	0.0	6.1	6.0			
LOS by Move:	A	A	A	D	A	C	A	A	A	A	A	A			
HCM2k95thQ:	0	0	0	6	0	8	10	8	0	0	6	5			

Level Of Service Computation Report
2000 HCM Operations Method (Future Volume Alternative)

Intersection #216 SR76 & W. Pala Mission Rd

Cycle (sec): 100 Critical Vol./Cap.(X): 0.460
Loss Time (sec): 12 Average Delay (sec/veh): 32.2
Optimal Cycle: 90 Level Of Service: C

Street Name:	W. Pala Mission Rd									SR76					
Approach:	North Bound			South Bound			East Bound			West Bound					
Movement:	L	-	T	-	R	L	-	T	-	R	L	-	T	-	R	L	-	T	-	R
Control:	Split Phase			Split Phase			Protected			Protected					
Rights:	Include			Include			Include			Include					
Min. Green:	5	5	5	5	5	5	5	5	5	5	5	5			
Y+R:	4.0	4.0	4.0	4.0	4.0	4.0	4.0	4.0	4.0	4.0	4.0	4.0			
Lanes:	1	0	0	1	0	0	1	0	0	1	1	0	1	1	0	1	0	0	1	0
Volume Module:															
Base Vol:	15	26	26	22	18	100	148	158	23	26	149	16			
Growth Adj:	1.00	1.00	1.00	1.00	1.00	1.00	1.00	1.00	1.00	1.00	1.00	1.00			
Initial Bse:	15	26	26	22	18	100	148	158	23	26	149	16			
Added Vol:	74	0	0	0	0	84	38	19	33	0	42	0			
PasserByVol:	0	0	0	0	0	0	0	0	0	0	0	0			
Initial Fut:	89	26	26	22	18	184	186	177	56	26	191	16			
User Adj:	1.00	1.00	1.00	1.00	1.00	1.00	1.00	1.00	1.00	1.00	1.00	1.00			
PHF Adj:	0.95	0.95	0.95	0.95	0.95	0.95	0.95	0.95	0.95	0.95	0.95	0.95			
PHF Volume:	94	27	27	23	19	194	196	186	59	27	201	17			
Reduct Vol:	0	0	0	0	0	0	0	0	0	0	0	0			
Reduced Vol:	94	27	27	23	19	194	196	186	59	27	201	17			
PCE Adj:	1.00	1.00	1.00	1.00	1.00	1.00	1.00	1.00	1.00	1.00	1.00	1.00			
MLF Adj:	1.00	1.00	1.00	1.00	1.00	1.00	1.00	1.00	1.00	1.00	1.00	1.00			
FinalVolume:	94	27	27	23	19	194	196	186	59	27	201	17			
Saturation Flow Module:															
Sat/Lane:	1900	1900	1900	1900	1900	1900	1900	1900	1900	1900	1900	1900			
Adjustment:	0.93	0.91	0.91	0.95	0.95	0.83	0.93	0.90	0.90	0.93	0.97	0.97			
Lanes:	1.00	0.50	0.50	0.55	0.45	1.00	1.00	1.52	0.48	1.00	0.92	0.08			
Final Sat.:	1769	861	861	996	815	1583	1769	2591	820	1769	1697	142			
Capacity Analysis Module:															
Vol/Sat:	0.05	0.03	0.03	0.02	0.02	0.12	0.11	0.07	0.07	0.02	0.12	0.12			
Crit Moves:	****					****	****				****				
Green/Cycle:	0.12	0.12	0.12	0.27	0.27	0.27	0.24	0.29	0.29	0.20	0.26	0.26			
Volume/Cap:	0.46	0.28	0.28	0.09	0.09	0.46	0.46	0.24	0.24	0.08	0.46	0.46			
Uniform Del:	41.3	40.4	40.4	27.6	27.6	30.7	32.4	26.8	26.8	32.1	31.3	31.3			
IncremntDel:	1.6	0.8	0.8	0.1	0.1	0.8	0.8	0.1	0.1	0.1	0.7	0.7			
InitQueuDel:	0.0	0.0	0.0	0.0	0.0	0.0	0.0	0.0	0.0	0.0	0.0	0.0			
Delay Adj:	1.00	1.00	1.00	1.00	1.00	1.00	1.00	1.00	1.00	1.00	1.00	1.00			
Delay/Veh:	43.0	41.2	41.2	27.6	27.6	31.5	33.2	27.0	27.0	32.2	32.0	32.0			
User DelAdj:	1.00	1.00	1.00	1.00	1.00	1.00	1.00	1.00	1.00	1.00	1.00	1.00			
AdjDel/Veh:	43.0	41.2	41.2	27.6	27.6	31.5	33.2	27.0	27.0	32.2	32.0	32.0			
LOS by Move:	D	D	D	C	C	C	C	C	C	C	C	C			
HCM2k95thQ:	6	4	4	2	2	10	11	6	6	1	11	11			

Level Of Service Computation Report
2000 HCM 4-Way Stop Method (Future Volume Alternative)

Intersection #217 Pala Mission Rd & Pala Temecula Rd

Cycle (sec): 100 | Critical Vol./Cap.(X): 0.581
Loss Time (sec): 0 | Average Delay (sec/veh): 12.7
Optimal Cycle: 0 | Level Of Service: B

Street Name:	Pala Temecula Rd						Pala Mission Rd					
Approach:	North Bound			South Bound			East Bound			West Bound		
Movement:	L	T	R	L	T	R	L	T	R	L	T	R
Control:	Stop Sign			Stop Sign			Stop Sign			Stop Sign		
Rights:	Include			Include			Include			Include		
Min. Green:	5	5	5	5	5	5	5	5	5	5	5	5
Lanes:	0 0	1! 0	0	0 0	1! 0	0	0 0	1! 0	0	0 0	1! 0	0
Volume Module:												
Base Vol:	1	24	3	161	24	119	181	31	3	1	34	247
Growth Adj:	1.00	1.00	1.00	1.00	1.00	1.00	1.00	1.00	1.00	1.00	1.00	1.00
Initial Bse:	1	24	3	161	24	119	181	31	3	1	34	247
Added Vol:	0	0	0	0	0	65	29	0	0	0	0	0
PasserByVol:	0	0	0	0	0	0	0	0	0	0	0	0
Initial Fut:	1	24	3	161	24	184	210	31	3	1	34	247
User Adj:	1.00	1.00	1.00	1.00	1.00	1.00	1.00	1.00	1.00	1.00	1.00	1.00
PHF Adj:	0.95	0.95	0.95	0.95	0.95	0.95	0.95	0.95	0.95	0.95	0.95	0.95
PHF Volume:	1	25	3	169	25	194	221	33	3	1	36	260
Reduct Vol:	0	0	0	0	0	0	0	0	0	0	0	0
Reduced Vol:	1	25	3	169	25	194	221	33	3	1	36	260
PCE Adj:	1.00	1.00	1.00	1.00	1.00	1.00	1.00	1.00	1.00	1.00	1.00	1.00
MLF Adj:	1.00	1.00	1.00	1.00	1.00	1.00	1.00	1.00	1.00	1.00	1.00	1.00
FinalVolume:	1	25	3	169	25	194	221	33	3	1	36	260
Saturation Flow Module:												
Adjustment:	1.00	1.00	1.00	1.00	1.00	1.00	1.00	1.00	1.00	1.00	1.00	1.00
Lanes:	0.03	0.86	0.11	0.44	0.06	0.50	0.86	0.13	0.01	0.01	0.12	0.87
Final Sat.:	19	449	56	292	43	333	524	77	7	2	83	606
Capacity Analysis Module:												
Vol/Sat:	0.06	0.06	0.06	0.58	0.58	0.58	0.42	0.42	0.42	0.43	0.43	0.43
Crit Moves:	****					****	****			****		
Delay/Veh:	9.2	9.2	9.2	14.4	14.4	14.4	12.3	12.3	12.3	11.2	11.2	11.2
Delay Adj:	1.00	1.00	1.00	1.00	1.00	1.00	1.00	1.00	1.00	1.00	1.00	1.00
AdjDel/Veh:	9.2	9.2	9.2	14.4	14.4	14.4	12.3	12.3	12.3	11.2	11.2	11.2
LOS by Move:	A	A	A	B	B	B	B	B	B	B	B	B
ApproachDel:	9.2			14.4			12.3			11.2		
Delay Adj:	1.00			1.00			1.00			1.00		
ApprAdjDel:	9.2			14.4			12.3			11.2		
LOS by Appr:	A			B			B			B		
AllWayAvgQ:	0.0	0.0	0.0	1.2	1.2	1.2	0.6	0.6	0.6	0.6	0.6	0.6

Note: Queue reported is the number of cars per lane.

Level Of Service Computation Report
2000 HCM Unsignalized Method (Future Volume Alternative)

Intersection #218 SR76 & Brittain Rd

Average Delay (sec/veh): 0.1 | Worst Case Level Of Service: B[10.5]

Street Name:	Brittain Rd									SR76					
Approach:	North Bound				South Bound				East Bound				West Bound		
Movement:	L	T	R		L	T	R		L	T	R		L	T	R
Control:	Stop Sign				Stop Sign				Uncontrolled				Uncontrolled		
Rights:	Include				Include				Include				Include		
Lanes:	0 0	0	0	0	0 0	1! 0	0		0 1	0	0	0	0 0	0	1 0
Volume Module:															
Base Vol:	0	0	0		1	0	1		4	173	0		0	185	4
Growth Adj:	1.00	1.00	1.00		1.00	1.00	1.00		1.00	1.00	1.00		1.00	1.00	1.00
Initial Bse:	0	0	0		1	0	1		4	173	0		0	185	4
Added Vol:	0	0	0		0	0	0		0	19	0		0	42	0
PasserByVol:	0	0	0		0	0	0		0	0	0		0	0	0
Initial Fut:	0	0	0		1	0	1		4	192	0		0	227	4
User Adj:	1.00	1.00	1.00		1.00	1.00	1.00		1.00	1.00	1.00		1.00	1.00	1.00
PHF Adj:	0.95	0.95	0.95		0.95	0.95	0.95		0.95	0.95	0.95		0.95	0.95	0.95
PHF Volume:	0	0	0		1	0	1		4	202	0		0	239	4
Reduct Vol:	0	0	0		0	0	0		0	0	0		0	0	0
FinalVolume:	0	0	0		1	0	1		4	202	0		0	239	4
Critical Gap Module:															
Critical Gp:	xxxxx	xxxx	xxxxx		6.4	6.5	6.2		4.1	xxxx	xxxxx	xxxxx	xxxx	xxxxx	
FollowUpTim:	xxxxx	xxxx	xxxxx		3.5	4.0	3.3		2.2	xxxx	xxxxx	xxxxx	xxxx	xxxxx	
Capacity Module:															
Cnflict Vol:	xxxx	xxxx	xxxxx		452	452	241		243	xxxx	xxxxx	xxxx	xxxx	xxxxx	
Potent Cap.:	xxxx	xxxx	xxxxx		566	503	798		1323	xxxx	xxxxx	xxxx	xxxx	xxxxx	
Move Cap.:	xxxx	xxxx	xxxxx		564	502	798		1323	xxxx	xxxxx	xxxx	xxxx	xxxxx	
Volume/Cap:	xxxx	xxxx	xxxx		0.00	0.00	0.00		0.00	xxxx	xxxx	xxxx	xxxx	xxxx	
Level Of Service Module:															
2Way95thQ:	xxxx	xxxx	xxxxx		xxxx	xxxx	xxxxx		0.0	xxxx	xxxxx	xxxx	xxxx	xxxxx	
Control Del:	xxxxx	xxxx	xxxxx		xxxxx	xxxx	xxxxx		7.7	xxxx	xxxxx	xxxxx	xxxx	xxxxx	
LOS by Move:	*	*	*		*	*	*		A	*	*	*	*	*	
Movement:	LT -	LTR -	RT		LT -	LTR -	RT		LT -	LTR -	RT		LT -	LTR -	RT
Shared Cap.:	xxxx	xxxx	xxxxx		xxxx	661	xxxxx		xxxx	xxxx	xxxxx		xxxx	xxxx	xxxxx
SharedQueue:	xxxxx	xxxx	xxxxx		xxxxx	0.0	xxxxx		0.0	xxxx	xxxxx		xxxxx	xxxx	xxxxx
Shrd ConDel:	xxxxx	xxxx	xxxxx		xxxxx	10.5	xxxxx		7.7	xxxx	xxxxx		xxxxx	xxxx	xxxxx
Shared LOS:	*	*	*		*	B	*		A	*	*		*	*	*
ApproachDel:	xxxxxx				10.5				xxxxxx				xxxxxx		
ApproachLOS:	*				B				*				*		

Note: Queue reported is the number of cars per lane.

```
------------------------------------------------------------------------------
------------------------------------------------------------------------------
                      Level Of Service Computation Report
           2000 HCM Unsignalized Method (Future Volume Alternative)
******************************************************************************
Intersection #219 SR76 & E. Pala Mission Rd
******************************************************************************
Average Delay (sec/veh):      3.8       Worst Case Level Of Service: C[ 18.4]
******************************************************************************
Street Name:         E. Pala Mission Rd                     SR76
Approach:      North Bound      South Bound       East Bound       West Bound
Movement:     L  -  T  -  R    L  -  T  -  R    L  -  T  -  R    L  -  T  -  R
------------|---------------||---------------||---------------||---------------|
Control:        Stop Sign        Stop Sign       Uncontrolled     Uncontrolled
Rights:           Include          Include          Include          Include
Lanes:        0  0  0  0  0    0  0  1! 0  0    0  1  0  0  0    0  0  0  1  0
------------|---------------||---------------||---------------||---------------|
Volume Module:
Base Vol:       0    0     0   169    0     3     2  184     0     0  216   204
Growth Adj:  1.00 1.00  1.00  1.00 1.00  1.00  1.00 1.00  1.00  1.00 1.00  1.00
Initial Bse:    0    0     0   169    0     3     2  184     0     0  216   204
Added Vol:      0    0     0     0    0     0     0   19     0     0   42     0
PasserByVol:    0    0     0     0    0     0     0    0     0     0    0     0
Initial Fut:    0    0     0   169    0     3     2  203     0     0  258   204
User Adj:    1.00 1.00  1.00  1.00 1.00  1.00  1.00 1.00  1.00  1.00 1.00  1.00
PHF Adj:     0.95 0.95  0.95  0.95 0.95  0.95  0.95 0.95  0.95  0.95 0.95  0.95
PHF Volume:     0    0     0   178    0     3     2  214     0     0  272   215
Reduct Vol:     0    0     0     0    0     0     0    0     0     0    0     0
FinalVolume:    0    0     0   178    0     3     2  214     0     0  272   215
------------|---------------||---------------||---------------||---------------|
Critical Gap Module:
Critical Gp:xxxxx xxxx xxxxx   6.4  6.5   6.2   4.1 xxxx xxxxx xxxxx xxxx xxxxx
FollowUpTim:xxxxx xxxx xxxxx   3.5  4.0   3.3   2.2 xxxx xxxxx xxxxx xxxx xxxxx
------------|---------------||---------------||---------------||---------------|
Capacity Module:
Cnflict Vol: xxxx xxxx xxxxx   617  617   399   496 xxxx xxxxx  xxxx xxxx xxxxx
Potent Cap.: xxxx xxxx xxxxx   454  406   651  1068 xxxx xxxxx  xxxx xxxx xxxxx
Move Cap.:   xxxx xxxx xxxxx   445  398   640  1059 xxxx xxxxx  xxxx xxxx xxxxx
Volume/Cap:  xxxx xxxx  xxxx  0.40 0.00  0.00  0.00 xxxx  xxxx  xxxx xxxx  xxxx
------------|---------------||---------------||---------------||---------------|
Level Of Service Module:
2Way95thQ:   xxxx xxxx xxxxx  xxxx xxxx xxxxx   0.0 xxxx xxxxx  xxxx xxxx xxxxx
Control Del:xxxxx xxxx xxxxx xxxxx xxxx xxxxx   8.4 xxxx xxxxx xxxxx xxxx xxxxx
LOS by Move:    *    *     *     *    *     *     A    *     *     *    *     *
Movement:     LT - LTR - RT    LT - LTR - RT    LT - LTR - RT    LT - LTR - RT
Shared Cap.: xxxx xxxx xxxxx  xxxx  448 xxxxx  xxxx xxxx xxxxx  xxxx xxxx xxxxx
SharedQueue:xxxxx xxxx xxxxx xxxxx  1.9 xxxxx   0.0 xxxx xxxxx xxxxx xxxx xxxxx
Shrd ConDel:xxxxx xxxx xxxxx xxxxx 18.4 xxxxx   8.4 xxxx xxxxx xxxxx xxxx xxxxx
Shared LOS:     *    *     *     *    C     *     A    *     *     *    *     *
ApproachDel:    xxxxxx            18.4           xxxxxx           xxxxxx
ApproachLOS:         *              C                *                *
******************************************************************************
Note: Queue reported is the number of cars per lane.
******************************************************************************
```



```
------------------------------------------------------------------------------
------------------------------------------------------------------------------
                      Level Of Service Computation Report
           2000 HCM Unsignalized Method (Future Volume Alternative)
******************************************************************************
Intersection #220 SR76 & Lilac Rd
******************************************************************************
Average Delay (sec/veh):      0.6       Worst Case Level Of Service: C[ 15.7]
******************************************************************************
Street Name:             Lilac Rd                           SR76
Approach:      North Bound      South Bound       East Bound       West Bound
Movement:     L  -  T  -  R    L  -  T  -  R    L  -  T  -  R    L  -  T  -  R
------------|---------------||---------------||---------------||---------------|
Control:        Stop Sign        Stop Sign       Uncontrolled     Uncontrolled
Rights:           Include          Include          Include          Include
Lanes:        0  0  1! 0  0    0  0  0  0  0    0  0  0  1  0    0  1  0  0  0
------------|---------------||---------------||---------------||---------------|
Volume Module:
Base Vol:       7    0     8     0    0     0     0  358     4     9  413     0
Growth Adj:  1.00 1.00  1.00  1.00 1.00  1.00  1.00 1.00  1.00  1.00 1.00  1.00
Initial Bse:    7    0     8     0    0     0     0  358     4     9  413     0
Added Vol:     15    0     0     0    0     0     0   12     7     0   27     0
PasserByVol:    0    0     0     0    0     0     0    0     0     0    0     0
Initial Fut:   22    0     8     0    0     0     0  370    11     9  440     0
User Adj:    1.00 1.00  1.00  1.00 1.00  1.00  1.00 1.00  1.00  1.00 1.00  1.00
PHF Adj:     0.95 0.95  0.95  0.95 0.95  0.95  0.95 0.95  0.95  0.95 0.95  0.95
PHF Volume:    23    0     8     0    0     0     0  389    12     9  463     0
Reduct Vol:     0    0     0     0    0     0     0    0     0     0    0     0
FinalVolume:   23    0     8     0    0     0     0  389    12     9  463     0
------------|---------------||---------------||---------------||---------------|
Critical Gap Module:
Critical Gp:  6.4  6.5   6.2 xxxxx xxxx xxxxx xxxxx xxxx xxxxx   4.1 xxxx xxxxx
FollowUpTim:  3.5  4.0   3.3 xxxxx xxxx xxxxx xxxxx xxxx xxxxx   2.2 xxxx xxxxx
------------|---------------||---------------||---------------||---------------|
Capacity Module:
Cnflict Vol:  877  877   395  xxxx xxxx xxxxx  xxxx xxxx xxxxx   401 xxxx xxxxx
Potent Cap.:  319  287   654  xxxx xxxx xxxxx  xxxx xxxx xxxxx  1158 xxxx xxxxx
Move Cap.:    317  284   654  xxxx xxxx xxxxx  xxxx xxxx xxxxx  1158 xxxx xxxxx
Volume/Cap:  0.07 0.00  0.01  xxxx xxxx  xxxx  xxxx xxxx  xxxx  0.01 xxxx  xxxx
------------|---------------||---------------||---------------||---------------|
Level Of Service Module:
2Way95thQ:   xxxx xxxx xxxxx  xxxx xxxx xxxxx  xxxx xxxx xxxxx   0.0 xxxx xxxxx
Control Del:xxxxx xxxx xxxxx xxxxx xxxx xxxxx xxxxx xxxx xxxxx   8.1 xxxx xxxxx
LOS by Move:    *    *     *     *    *     *     *    *     *     A    *     *
Movement:     LT - LTR - RT    LT - LTR - RT    LT - LTR - RT    LT - LTR - RT
Shared Cap.: xxxx  367 xxxxx  xxxx xxxx xxxxx  xxxx xxxx xxxxx  xxxx xxxx xxxxx
SharedQueue:xxxxx  0.3 xxxxx xxxxx xxxx xxxxx xxxxx xxxx xxxxx   0.0 xxxx xxxxx
Shrd ConDel:xxxxx 15.7 xxxxx xxxxx xxxx xxxxx xxxxx xxxx xxxxx   8.1 xxxx xxxxx
Shared LOS:     *    C     *     *    *     *     *    *     *     A    *     *
ApproachDel:     15.7           xxxxxx           xxxxxx           xxxxxx
ApproachLOS:         C                *                *                *
******************************************************************************
Note: Queue reported is the number of cars per lane.
******************************************************************************
```

Level Of Service Computation Report
2000 HCM Unsignalized Method (Future Volume Alternative)

Intersection #221 SR76 & Adams Dr

Average Delay (sec/veh): 0.2 Worst Case Level Of Service: B[13.8]

Street Name:	Adams Dr							SR76							
Approach:	North Bound				South Bound				East Bound				West Bound			
Movement:	L	-	T	-	R	L	-	T	-	R	L	-	T	-	R	L	-	T	-	R
Control:	Stop Sign					Stop Sign					Uncontrolled					Uncontrolled				
Rights:	Include					Include					Include					Include				
Lanes:	0	0	1!	0	0	0	0	1!	0	0	0	1	0	0	0	0	0	0	1	0
Volume Module:																				
Base Vol:	0	0	0	5	0	3	5	262	0	0	436	9								
Growth Adj:	1.00	1.00	1.00	1.00	1.00	1.00	1.00	1.00	1.00	1.00	1.00	1.00								
Initial Bse:	0	0	0	5	0	3	5	262	0	0	436	9								
Added Vol:	0	0	0	0	0	0	0	11	0	0	26	0								
PasserByVol:	0	0	0	0	0	0	0	0	0	0	0	0								
Initial Fut:	0	0	0	5	0	3	5	273	0	0	462	9								
User Adj:	1.00	1.00	1.00	1.00	1.00	1.00	1.00	1.00	1.00	1.00	1.00	1.00								
PHF Adj:	0.95	0.95	0.95	0.95	0.95	0.95	0.95	0.95	0.95	0.95	0.95	0.95								
PHF Volume:	0	0	0	5	0	3	5	287	0	0	486	9								
Reduct Vol:	0	0	0	0	0	0	0	0	0	0	0	0								
FinalVolume:	0	0	0	5	0	3	5	287	0	0	486	9								
Critical Gap Module:																				
Critical Gp:	7.1	6.5	6.2	6.4	6.5	6.2	4.1	xxxx	xxxxx	xxxxx	xxxx	xxxxx								
FollowUpTim:	3.5	4.0	3.3	3.5	4.0	3.3	2.2	xxxx	xxxxx	xxxxx	xxxx	xxxxx								
Capacity Module:																				
Cnflict Vol:	791	794	287	789	789	491	496	xxxx	xxxxx	xxxx	xxxx	xxxxx								
Potent Cap.:	308	321	752	359	323	577	1068	xxxx	xxxxx	xxxx	xxxx	xxxxx								
Move Cap.:	305	319	752	358	321	577	1068	xxxx	xxxxx	xxxx	xxxx	xxxxx								
Volume/Cap:	0.00	0.00	0.00	0.01	0.00	0.01	0.00	xxxx	xxxx	xxxx	xxxx	xxxx								
Level Of Service Module:																				
2Way95thQ:	xxxx	xxxx	xxxxx	xxxx	xxxx	xxxxx	0.0	xxxx	xxxxx	xxxx	xxxx	xxxxx								
Control Del:	xxxxx	xxxx	xxxxx	xxxxx	xxxx	xxxxx	8.4	xxxx	xxxxx	xxxxx	xxxx	xxxxx								
LOS by Move:	*	*	*	*	*	*	A	*	*	*	*	*								
Movement:	LT -	LTR -	RT	LT -	LTR -	RT	LT -	LTR -	RT	LT -	LTR -	RT								
Shared Cap.:	xxxx	0	xxxxx	xxxx	418	xxxxx	xxxx	xxxx	xxxxx	xxxx	xxxx	xxxxx								
SharedQueue:	xxxxx	xxxx	xxxxx	xxxxx	0.1	xxxxx	0.0	xxxx	xxxxx	xxxxx	xxxx	xxxxx								
Shrd ConDel:	xxxxx	xxxx	xxxxx	xxxxx	13.8	xxxxx	8.4	xxxx	xxxxx	xxxxx	xxxx	xxxxx								
Shared LOS:	*	*	*	*	B	*	A	*	*	*	*	*								
ApproachDel:	xxxxxx			13.8			xxxxxx			xxxxxx										
ApproachLOS:	*			B			*			*										

Note: Queue reported is the number of cars per lane.

Level Of Service Computation Report
2000 HCM Unsignalized Method (Future Volume Alternative)

Intersection #222 SR76 & Cole Grade Rd

Average Delay (sec/veh): 3.1 Worst Case Level Of Service: C[18.5]

Street Name:	Cole Grade Rd							SR76							
Approach:	North Bound				South Bound				East Bound				West Bound			
Movement:	L	-	T	-	R	L	-	T	-	R	L	-	T	-	R	L	-	T	-	R
Control:	Stop Sign					Stop Sign					Uncontrolled					Uncontrolled				
Rights:	Include					Include					Include					Include				
Lanes:	0	0	1!	0	0	0	0	0	1	0	0	0	1!	0	0	0	0	1!	0	0
Volume Module:																				
Base Vol:	72	3	37	0	1	1	0	221	125	41	300	3								
Growth Adj:	1.00	1.00	1.00	1.00	1.00	1.00	1.00	1.00	1.00	1.00	1.00	1.00								
Initial Bse:	72	3	37	0	1	1	0	221	125	41	300	3								
Added Vol:	2	0	0	0	0	3	1	3	1	0	6	0								
PasserByVol:	0	0	0	0	0	0	0	0	0	0	0	0								
Initial Fut:	74	3	37	0	1	4	1	224	126	41	306	3								
User Adj:	1.00	1.00	1.00	1.00	1.00	1.00	1.00	1.00	1.00	1.00	1.00	1.00								
PHF Adj:	0.95	0.95	0.95	0.95	0.95	0.95	0.95	0.95	0.95	0.95	0.95	0.95								
PHF Volume:	78	3	39	0	1	4	1	236	133	43	322	3								
Reduct Vol:	0	0	0	0	0	0	0	0	0	0	0	0								
FinalVolume:	78	3	39	0	1	4	1	236	133	43	322	3								
Critical Gap Module:																				
Critical Gp:	7.1	6.5	6.2	xxxxx	6.5	6.2	4.1	xxxx	xxxxx	4.1	xxxx	xxxxx								
FollowUpTim:	3.5	4.0	3.3	xxxxx	4.0	3.3	2.2	xxxx	xxxxx	2.2	xxxx	xxxxx								
Capacity Module:																				
Cnflict Vol:	737	736	322	xxxx	801	344	335	xxxx	xxxxx	378	xxxx	xxxxx								
Potent Cap.:	334	347	719	xxxx	318	699	1224	xxxx	xxxxx	1180	xxxx	xxxxx								
Move Cap.:	316	328	707	xxxx	301	687	1214	xxxx	xxxxx	1170	xxxx	xxxxx								
Volume/Cap:	0.25	0.01	0.06	xxxx	0.00	0.01	0.00	xxxx	xxxx	0.04	xxxx	xxxx								
Level Of Service Module:																				
2Way95thQ:	xxxx	xxxx	xxxxx	xxxx	xxxx	xxxxx	0.0	xxxx	xxxxx	0.1	xxxx	xxxxx								
Control Del:	xxxxx	xxxx	xxxxx	xxxxx	xxxx	xxxxx	8.0	xxxx	xxxxx	8.2	xxxx	xxxxx								
LOS by Move:	*	*	*	*	*	*	A	*	*	A	*	*								
Movement:	LT -	LTR -	RT	LT -	LTR -	RT	LT -	LTR -	RT	LT -	LTR -	RT								
Shared Cap.:	xxxx	386	xxxxx	xxxx	xxxx	547	xxxx	xxxx	xxxxx	xxxx	xxxx	xxxxx								
SharedQueue:	xxxxx	1.3	xxxxx	xxxxx	xxxx	0.0	xxxxx	xxxx	xxxxx	xxxxx	xxxx	xxxxx								
Shrd ConDel:	xxxxx	18.5	xxxxx	xxxxx	xxxx	11.6	xxxxx	xxxx	xxxxx	xxxxx	xxxx	xxxxx								
Shared LOS:	*	C	*	*	*	B	*	*	*	*	*	*								
ApproachDel:	18.5			11.6			xxxxxx			xxxxxx										
ApproachLOS:	C			B			*			*										

Note: Queue reported is the number of cars per lane.

APPENDIX E

CUMULATIVE PROJECTS

Cumulative Project List

FARM LABOR CAMP HARRY SINGH & SONS (MUP 00-005)
MUP 01-061
MUP 01-111
#20103A SOSA / AT&T (MUP 03-038)
CINGULAR WIRELESS ZAP (MUP 03-024)
AT&T WIRELESS ZAP (MUP 03-057)
GPA XX-XX
32052 A OLIVEHILL / AT&T WIRELESS ZAP (MUP 03-035)
PAA 03-013
NOEL STEHLY (TPM 20690)
AP 04-034
HIDDEN GROVE ESTATES (TPM 20823)
BROOKFALL TPM (TPM 20824)
HUKARI TPM (TPM 20830)
FERRARO, TPM, 4 LOTS + (TPM 20833)
STEHLY TPM (TPM 20689)
MINGO TPM (TPM 20829)
HEMME ESTATES (TPM 20831)
SPRINT PCS (MUP 01-021)
PALA MESA HIGHGROUNDS (MUP 04-024)
PALA MESA RESORT (MUP 74-120)
PALOMAR AGGREGATE / ROSEMARY'S MTN MUP (MUP 87-021)
AT&T WIRELESS (MUP 99-038)
PALA MESA (TM 5231)
KELWOOD DEVELOPMENT (REZ 04-005)
AZZARA OPEN SPACE ENCROACHMENT AD (AP 06-064)
HIDDEN HILLS TM (TM 4730)
REZ 99-020
CROOK TPM (TPM 20851)
HILL RANCH TENTATIVE MAP (TM 5095)
STP 03-066
4S RANCH AREA 34(30) (STP 04-012)
OLIVE HILL VARIABLE SITE PLAN (STP 04-062)
FENTON PALA BORROW PIT MUP (MUP 74-088)
TWIN OAK RP 78-002 QM0104 (RCP 78-002)
RP 79-005 (RCP 79-005)
SITE PLAN FOR SFD WITHIN I-15 CORIDOR (STP 04-026)
PALA MESA (TM 5187)
ESTATES AT MCDONALD PARK TM (TM 5378)
TRAN TENTATIVE PARCEL MAP (TPM 20835)
BIERNACKI TPM 2 LOT SUBDIVISION (TPM 20836)
JLP PROPERTIES TPM (TPM 20838)
BOWERBOCK AD (AP 04-040)
SANDERS, TPM, BC, 4 LOTS + (TPM 20845)
BONSALL VILLAGE - CINGULAR WIRELESS ZAP (MUP 04-011)
BRIDGE PAC WEST (TPM 20841)
BANUELOS SECOND DWELLING UNIT (MUP 04-012)
NEXTEL HELLERS BEND MUP (MUP 04-030)
MERRIAM MOUNTAINS, GPA, SP, REZ, TM, STP (TM 5381)
GHODSI BOUNDARY ADJUSTMENT (BA 04-0157)
LAS CASITAS (TM 5387)
PAUMA HEIGHTS RANCH (TPM 20848)
KENDALL FAMILY TRUST (TPM 20849)
NEXTEL CA5162-U (MUP 04-035)
RARICK TPM (TPM 20853)
FRENCH ZAP (MUP 04-019)
ADAMS OPEN SPACE VACATION (BA 05-0019)
NORTHCUTT, TPM, 2 LOTS (TPM 20860)
CONSTANT CREEK LLC (TM 5391)
LOTZ RESIDENCE (AP 04-055)
PALA MESA (MUP 96-006-01)
WILLOW CREEK (MUP 04-041)
FRAME TPM (TPM 20872)
PEPPER TREE LOT 220 P67-069 M2 (MUP 87-069-03)
MURRAY DAVIDSON (TM 5398)
BEREZOUSKY TPM (TPM 20874)
S04-058 CIELO LINDO (STP 04-058)
TPM20878 - SOLORZANO (TPM 20878)
STANNARD OVERSIZED STRUCTURE (AP 04-063)
HOKANSON & SHIELDS TPM (TPM 20881)
SUNDANCE RANCH (TM 5403)
ROBILLARD (AP 04-065)
RIVER RUN WEST TPM (TPM 20866)
ARVAY CHILD CARE CENTER ZAP (MUP 04-028)
TM 5410 MARQUART RANCH TENTATIVE MAP (TM 5410)
SPRINT-FOOTHILLS, SD34XC863-B (MUP 04-057)
COUNTRY GARDENS II, MUP, (MUP 04-058)
RANCHO ALEGRE (TM 5413)
DIANA ACRES (TPM 20896)
MC COWAN ANDDUNCKEL TPM (TPM 20897)
YUCCA (MUP 00-057-01)
PAUMA VALLEY ESTATES, REZ, TM, MUP (TM 5416)
FALLBROOK OAKS (PAA 04-008)
PAA 04-003
BA 98-0048
AP 99-031
TPM 20182
BA 98-0069
LABROT 2ND DWELLING UNIT ZAP (MUP 03-099)
MUP 99-014
TPM 20763
SEEMAN AD (AP 03-054)
GORDON TPM (TPM 20776)
TPM 19829
OVERSIZED AG BLDG ZAP (MUP 03-106)

MEADOWOOD, GPA, SP, REZ, TM, STP'S, (TM 5354)
FALLBROOK SPORTS ASSOC. MUP63-120W7 (MUP 63-120-07)
TM 5079
DYAL RESIDENCE SITE PLAN (STP 04-010)
BA 04-0030
AP 04-011
MUSTAFA TPM (TPM 20811)
WEST MINOR SUBDIVISION (TPM 20814)
SLAVEN, TPM, 2 LOTS (TPM 20819)
DAI DANG MEDITATION CENTER (MUP 04-016)
SPRINT/PARKER (MUP 04-017)
LOS WILLOWS (MUP 03-127)
CALAVO SUBDIVISION (TM 5350)
MISSION RIDGE ROAD TPM (TPM 20793)
STEHLY CAMINITO QUIETO, TPM (TPM 20799)
CROSSROADS INVESTORS, TPM, STP (TPM 20800)
TM 5352
HUNTER SUBDIVSION (TPM 20804)
CORDUAN TPM (TPM 20789)
DABBS TENTATIVE MAP (TM 5346)
AP 03-083
AP 03-082
NEVILLS (AP 03-085)
AP 03-076
AP 99-015
BA 98-0049
OLIVE HILL TM (TM 4976)
AP 02-058
BUNJE TPM (TPM 20235)
BA 98-0038
MUP 94-025
STP 96-005
MALEK TPM (TPM 20365)
ROSA TPM (TPM 20321)
MUP 88-045
REEVE TPM (TPM 20411)
MUP 83-063
AP 02-061
MUP 74-121
AP 02-062
MUP 98-034
AP 99-016
STP 97-047
STP 98-023
TPM - TAUFER PROPERTY (TPM 19522)
STP 98-025
ROICK TPM (TPM 20339)
TARTER TPM (TPM 20397)
CHAMPAGNE GARDENS REZONE (REZ 94-007)
AP 99-038
BA 98-0206
MUP 98-004
AP 98-003
STP 98-006
AP 03-091
AP 03-092
MUP 98-011
TPM 20359
AP 98-011
BA 98-0047
STP 98-008
TPM 20356
MTN/VLLYS COMMUNITY CLINIC W2 (MUP 63-162)
AP 98-022
STP 98-040
TM 5028
STP 99-007
STP 99-005
STP 99-014
BONSALL LAND INC - BRESA DEL MAR TM (TM 4793)
TPM 19875
STEPHENS TPM (TPM 20382)
TPM 19640
STP 97-052
TPM - 5 LOT SUB-DIVISION (TPM 19827)
AP 04-006
BARTLETT (TPM 20806)
ROBERT PETITTO (TPM 20205)
TPM 20244
ATTEBERRY TPM (TPM 20322)
MC CARTHY TRUST TPM (TPM 20390)
PAUMA VALLEY C.C. P65-034 (MUP 65-034)
PAA 99-01
MUP 97-017
JACOBS OVERSIZED DETACHED GARAGE (AP 04-016)
AP 98-018
TM 4971
MUP 98-022
TPM 20258
TPM 20219
MUP 98-005
TPM 20096
MALLERY TPM (TPM 20308)
PENNINSULA PROPERTIES (TPM 19139)
TM 4871

STP 99-029
ANDREW STANNARD, AT&T (MUP 04-009)
MUP 03-097
COSTELLO APARTMENTS (STP 03-056)
KAVEER RANCH AD (AP 03-049)
PALA MESA RESORT/TM (TM 5534)
SPRINT PCS ZAP (MUP 03-080)
BUTLER, ROBERT (MUP 03-087)
FRUMMET RESIDENCE - CINGULAR ZAP (MUP 03-091)
MUP 03-084
AT&T WIRELESS ZAP (MUP 03-093)
AP 03-044
#20034 SULLIVAN / AT&T (MUP 03-079)
TPM 20753
WALDMAN TM (TM 5320)
PASSERELLE, CAMPUS PARK, GPA, SPA, REZ, (TM 5338)
THE PROMINENCE AT PALA (TM 5321)
#20037 HWY 76 / AT&T (MUP 03-070)
PAA 03-005
BA 03-0104
AP 03-031
MUP 03-071
AT&T WIRELESS ZAP (MUP 03-044)
#26016-YELLOW BRICK RD / AT&T ZAP (MUP 03-045)
STP 03-030
AP 03-025
AP 03-022
CHRISTMAN TPM (TPM 20738)
STP 03-024
REZ 03-003
REZ 03-008
PALA MESA MAINTENANCE BLDG (MUP 74-121-09)
#20104 A DEL RIO / AT&T (MUP 03-034)
CINGULAR WIRELESS ZAP (MUP 03-037)
AT&T WIRELESS ZAP (MUP 03-028)
MUP 03-065
RUFFIN/JOHNSON TPM (TPM 20725)
AP 03-018
SCHAICH (TPM 20731)
MUP 03-019
MUP 03-023
MUP 03-017
DREESSEN (TPM 20727)
MUP 87-026
COVO SITE PLAN FOR AUTO REPAIR (STP 03-004)
TPM 20714
BROOK HILLS - TM (TM 4908)
AP 02-072
#951-01 STANNARD RES / CINGULAR (MUP 02-077)
MUP 87-061
ARCHER 2ND DWELLING UNIT ZAP (MUP 03-001)
MUP 86-022
BA 03-0168
TABATA BONSALL (TPM 20729)
VALENTINE TRUST TPM (TPM 20710)
BROWN TPM (TPM 20717)
AVOLO LLC (TPM 20718)
#944-04 BERNARD / CINGULAR (MUP 03-113)
BA 03-0034
CINGULAR WIRELESS ZAP (MUP 03-006)
CINGULAR WIRELESS ZAP (MUP 03-007)
STP 03-042
MUP 03-098
NEXTEL MUP (MUP 03-090)
AP 03-064
#26029 RANGER / VELOCITEL (MUP 03-098)
BARR RANCH TM (TM 5293)
NEXTEL COMMUNICATIONS ZAP (MUP 01-113)
SPRINT PCS ZAP (MUP 02-052)
ROCKEFELLER TPM (TPM 20596)
TPM 20685
WEBER TPM (TPM 20528)
TM 5220
PALA SHOPPING CENTER SITE PLAN (STP 02-061)
WEST LILAC FARMS I & II (TM 5276)
TPM 20683
MUP 02-007
SPRINT PCS ZAP (MUP 02-053)
TREISTER TPM (TPM 20581)
TPM 20494
TPM 20640
MUP 82-072
MUP 02-015
MUP 02-065
SP AND 51 LOT SUB (TM 5263)
NICHOLS/WITMAN GPA $ REZ (REZ 03-019)
NEXTEL COMMUNICATIONS (MUP 01-105)
MUP 02-040
NEXTEL COMMUNICATIONS ZAP (MUP 01-114)
MMR ASSOCIATES REZONE (MUP 02-026)
MUP 01-044
MUP 02-067
MUP 72-061
PALOMAR AGGREGATES / ROSEMARY'S MTN RP (RCP 87-001)
PATAPOFF LP A LIMITED PARTNERSHIP TPM (TPM 20542)
TPM 20620
SPRINT PCS ZAP (AP 02-042)
HORMUTH TPM (TPM 20432)
MUP 67-092
BA 02-0095
MUP 81-037
MUP 91-038
BA 02-0154
VERIZON WIRELESS ZAP (MUP 02-022)
THUEN TPM (TPM 20585)
BA 02-0048
STEPHANY TPM (TPM 20625)
TM 5272
TM 5275
TPM 20643
LAUS TPM 2 LOTS (TPM 20642)
TPM 20619
TPM 20646
PALISADES ESTATES TM (TM 5158)
SPRINT PCS (MUP 00-113)
AP 02-039
LATTER-DAY SAINTS / VIA MONSERATE (MUP 02-011)
REZ 01-003
TPM 20632
MUP 98-011
MUP 01-033
MUP 01-016
SPECTRASITE COMMUNICATIONS (MUP 01-091)
COOL VALLEY RANCH TM (TM 5251)
MUP 84-103
STP 02-015
MUP 00-040
TM 5184
CHOI TM (TM 5264)
TPM 20623
TPM 20629
VANDEVEGTE, STEVEN, TM, (TM 5243)
MUP 02-012
TPM 20671
AP 02-045
TPM 20664
AP 91-149
STP 92-022
DIVINE TPM (TPM 20526)
SHADOW RUN RANCH, LLC (TM 5223)
BA 02-0114
BA 02-0111
CHOI TPM (TPM 20668)
AP 01-008
COLLINS TPM (TPM 20505)
STP 00-016
AT&T WIRELESS (MUP 00-068)
VERIZON WIRELESS (MUP 00-081)
AMERICAN TOWER WIRELESS (MUP 01-049)
MUP 00-087
OAK CREEK MANOR LLC (MUP 00-104)
TPM 20635
MUP 00-094
MUP 00-139
REDDING TPM (TPM 20590)
STP 97-051
STP 02-072
MUP 99-001
MUP 01-011
MUP 97-004
MUP 77-085
REZKO TPM (TPM 20368)
TPM 20622
MUP 88-034
SCHNOEBELEN (TPM 20451)
TM 5037
MUP 69-087
GRAY TPM (TPM 20503)
SPRINT PCS (MUP 01-003)
SCHAEFER TPM (TPM 20489)
DISANDRO TPM (TPM 20485)
TM 5211
GRAY TPM (TPM 20473)
TPM 20663
CHIPMAN TPM (TPM 20440)
RCP 79-05
AP 02-015
AP 02-016
AP 02-005
TM 5190
WOODHEAD TPM (TPM 20541)
ZEBU CONSTRUCTION & DESIGN TPM (TPM 20584)
OSTERKAMP TM (TM 5222)
SHIELDS TPM (TPM 20546)
PENDER TPM (TPM 20545)
JILES RANCH TPM (TPM 20611)
MUP 01-006
SPRINT PCS (MUP 01-043)
BLOSSOM VALLEY RANCH (TM 5197)
TM 5242

BABCOCK TPM (TPM 20567)
CAMERON TPM (TPM 20587)
KENNEDY CLARK TPM (TPM 20601)
MUP 00-049
MUP 00-073
MUP 00-099
VERIZON WIRELESS (MUP 00-112)
SPRINT PCS (MUP 01-034)
NEXTEL COMMUNICATIONS (MUP 01-048)
STP 01-016
WIKTORIN RESIDENCE (STP 01-048)
MUP 00-054
MUP 81-023
ZEBU INC TPM (TPM 20486)
TM 5266
SPRINT PCS (MUP 01-020)
HAUGH, GRANGER (TPM 20610)
AP 02-012
TM 5004
BA 01-0051
ASPEL TPM (TPM 20592)
CHAFFIN TM (TM 5217)
TOSCANA SITE PLAN (STP 01-078)
TPM 20484
U.S. WEST CELLULAR - BONSALL EAST (MUP 95-003)
MUP 99-024
TM 5175
AP 00-006
TM 5273
TM 5214
MUP 02-075
SPANISH TRAILS (FORMALLY LORANDA) (TM 5173)
CRAIG & BECKY SCHMAD TPM (TPM 20559)
STEERE SITE PLAN (STP 01-044)
MUP 60-120
STP 00-043
BROWN, LEE & KAREN, TPM, (TPM 20614)
TM 5168
U.S. WEST CELLULAR (MUP 95-004)
AP 02-001
STP 01-024
AP 01-052
MUP 87-062
KEMPF TPM (TPM 20001)
PACIFICA TPM (TPM 20524)
OSWALD (TPM 20533)
SPRINT PCS (MUP 00-149)
WHITE TPM (TPM 20562)
DANIELS TPM (TPM 20476)
THE GROVES/ LOS MONTANAS (TM 4694)
PALISADES ESTATES AD (AP 99-007)
SPRINT PCS (MUP 00-166)
CINGULAR WIRELESS, DULIN ROAD (MUP 70-139)
STP 99-051
MUP 79-140
MUNOZ / STEHLY TPM (TPM 20449)
TM 5215
VARVEL 2ND DWELLING UNIT (MUP 00-119)
STP 96-039
VAN DE ROO FARMS TPM (TPM 20395)
BURGE TPM (TPM 20538)
AP 01-031
MUP 01-060
TM 5229
PRUITT TPM (TPM 20429)
BA 01-0056
AMERICAN TOWER CORP. (MUP 01-096)
GIESLER TPM (TPM 20316)
VAN CLEAVE TPM (TPM 20033)
TPM 20480
SCHNEIDER TPM (TPM 20444)
MUP 96-029
REZ 00-015
STP 00-020
PEPPERTREE PARK STP (STP 00-012)
PEPPERTREE PARK TM (TM 4713)
MUP 88-039
BA 01-0032
BLUE RIBBON FARMS TPM (TPM 20343)
SKYRIDGE PHASE 2 SITE PLAN (STP 01-006)
SPRINT PCS (MUP 00-164)
TPM 20173
TM 4736
HERNANDEZ TPM (TPM 20433)
MUP 00-057
TM 4731
TM5270-1 (MUP 84-110-03)
AP 01-003
AP 01-002
TOWEY 2ND DWELLING UNIT (MUP 01-027)
MUP 75-093
GOEPPINGER TPM (TPM 20310)
TPM 20033SC
COUNTRY ESTATES TM (TM 4700)
SPRINT PCS (MUP 00-110)
MUP 82-069
AP 00-019
REILL HOMES TPM (TPM 20457)
MUP 72-618
PATAPOFF TPM (TPM 20317)
BERGENER & STEHLY TPM (TPM 20516)
SPRINT PCS (MUP 00-165)
AP 01-013
TM 4607-1
STP 00-074
BIERNACKE 2ND DWELLING UNIT (MUP 00-070)
DICKSON 2ND DWELLING UNIT (MUP 00-102)
MUP 00-012
SPRINT PCS (MUP 00-084)
TULUIE TM (TM 5097)
BERK TPM (TPM 20534)
BA 01-0001
REICH - ZABU TPM (TPM 20353)
STAGGE TPM (TPM 20547)
AP 01-009
TM 4956
AP 00-056
FINLAYSON (TPM 20052)
AP 00-047
CAMERON TPM (TPM 20443)
HARTOG TPM (TPM 20410)
KITTENHOFEN TPM (TPM 20525)
STP 00-062
STP 00-046
ROSA TPM (TPM 20373)
BOCHINSKI TPM (TPM 20034)
TM 4766
LEE FAMILY TPM (TPM 20376)
BENDER TPM (TPM 20392)
REICH & MOE TPM (TPM 20385)
PALA MESA FAIRWAYS MUP (MUP 77-070)
ATTEBERRY TPM (TPM 20434)
LEISING TPM (TPM 20427)
PAA 00-01
AP 00-039
STP 02-067
MUP 99-022
BA 99-0105
TM 4736-1
STP 99-043
TM 5166
EVANS TPM (TPM 20491)
TM 4944
AP 00-025
NICOLAY TPM (TPM 20419)
BA 00-0091
STP 00-024
AP 00-005
AP 00-020
AP 00-028
MUP 69-101
CHIPMAN TPM (TPM 20381)
MUP 99-010
TM 4729
TM 5150
LUNDSTAT TPM (TPM 20504)
TPM 19937
ST PETER'S CATHOLIC CHURCH MUP (MUP 65-041)
TOUMI TPM (TPM 20435)
BA 99-0176
TM 5012
MUP 99-021
TPM 19742
SILVERADO TRUST TPM (TPM 20352)
WARNER SITE PLAN (STP 99-060)
AP 99-051
SCHILLING TPM (TPM 20467)
TM 4972
LUNG TPM (TPM 20431)
AP 00-002
MUP 96-002
PATTERSON TPM (TPM 20355)
GEORGE TPM (TPM 20360)
BANE TPM (TPM 20394)
MUP 99-017
STP 99-057
BA 99-0103
MUP 03-056
CINGULAR WIRELESS ZAP (MUP 03-055)
#826 - CONNER RES / CINGULAR (MUP 03-074)
AP 03-077
DANIELS TM (TM 5364)
BONSALL ROAD STATION (MUP 03-108)
RAINBOW VALLEY NURSERY ZAP (MUP 03-104)
ROSEMERE LN PM (TPM 20901)
CASTLE CREEK SENIORS (PAA 05-004)
PALOMAR DRIVE LOT SPLIT (TPM 20908)
POLO CLUB MUP M2 (MUP 92-019-02)
ALFRED'S RANCHO (TPM 20912)
WEXLER TPM (TPM 20913)

SCHIPONO TPM (TPM 20915)
FALLBROOK OAKS, GPA, REZ, TM, STP (TM 5449)
BOYD-KROHN BOUNDARY ADJUSTMENT (BA 05-0050)
KIRK AND KRIPPNER, TPM, 4 LOTS (TPM 20924)
FALLBROOK LAND CONSERVANCY B/A (BA 05-0066)
GAITAUD PROPERTY (AP 05-018)
CAMPUS PARK WEST, GPA,SPA,TM,REZ,STP (TM 5424)
UNDERWOOD OVERSIZED BARN (AP 05-019)
PALA INDIAN RESERVATION (MUP 00-099-01)
CANEY, TOM, 2 LOTS (TPM 20929)
PALA MESA PATIO/H.C. "RAMP ACCESS" (MUP 74-120-05)
MURRAY DAVIDSON TPM (TPM 20932)
BONSALL SUBDIVISION, REZ, TM, STP'S (TM 5427)
NS308-01 FRUMMET RESIDENCE (MUP 05-009)
GUEST HOUSE , MORISON (AP 05-023)
NS 301-02 AQUA HILL WATER TANK (MUP 05-011)
CINGULAR WIRELESS ZAP - W1 (MUP 03-037-01)
VIA MARIPOSA NORTE BOUNDARY ADJUSTMENT (BA 05-0087)
FERNANDEZ, TPM, 4 LOTS (TPM 20936)
NEXTEL OLD HWY 395/CA6999D (MUP 02-040-01)
MATTHEWS (AP 05-027)
EL SENDERO MUP CELL (MUP 05-014)
MONTE VISTA (MUP 05-013)
LAKE RANCHO VIEJO (STP 05-036)
JOB NO. 108-04 (TPM 20943)
FALLBROOK HISTORICAL BARN MUSEUM (MUP 83-061-02)
RABUCHIN, TPM, 4 LOTS (TPM 20944)
NEXTEL CA 7498 GREEN CANYON (MUP 05-023)
KOHNE RESIDENCE, REZ (REZ 05-012)
NS317-01 MONTGOMERY RESIDENCE (MUP 05-025)
NICHOLS WHITMAN, TPM, 4 LOTS (TPM 20950)
LAKE RANCHO VIEJO (STP 05-045)
PUBHTA HORSE BARN AD PERMIT (AP 05-038)
WARNER RANCH (PAA 05-008)
OAK GLEN (TM 5446)
ATKINS PROPERTY SD60XC065-B (MUP 05-028)
LAKE RANCHO VIEJO (MUP 81-023-07)
MITCHELL (MUP 05-030)
MONSERATE (MUP 05-031)
TILLEARD (MUP 05-033)
PALA MESA, REZ (REZ 03-001)
RIVER VILLAGE (MUP 90-008-01)
SEVENTH DAY ADVENTIST CHURCH (MUP 87-062-04)
AG BRUSHING AND CLEARING (AP 05-047)
CAL-A-VIE (MUP 82-072-04)
TWIN OAKS 4, TPM, 4 LOTS (TPM 20954)
GAGGERO SUBDIVISION (TM 5453)
CITRACADO TPM (TPM 20956)
WHITE FOX RUN, TPM, 4 LOTS + (TPM 20957)
ADAMS DRIVE TPM (TPM 20959)
BROWN 2ND DWELLING UNIT (MUP 05-020)
LAGUS TENTATIVE PARCEL MAP (TPM 20966)
WILLOW CREEK AT PEPPERTREE PARK (MUP 87-069-04)
RINCON ACRES (TPM 20970)
OLD OAK, TPM, 3 LOTS (TPM 20971)
AMKRAUT, TPM, 4 LOTS (TPM 20972)
COMPTON TPM (TPM 20722)
FALLBROOK AIRPARK HELICOPTER BASE STATIO (MUP 63-120-08)
BONSALL-PANTIC PROPERTY (MUP 90-031-03)
DIEN N DO, TPM, 4 LOTS + (TPM 20976)
ALL SEASONS CAMPGROUND (MUP 84-103-08)
MEHTA TPM (TPM 20979)
JOHNSON, TPM, 2 LOTS (TPM 20980)
DISANDRO CINGULAR CELLULAR COMMUNICATION (MUP 05-039)
AVOCADO TERRACE (TPM 20982)
HOBBS, TPM, 2 LOTS (TPM 20985)
ARCO AM PM SITE PLAN MODIFICATION (STP 96-039-02)
KIRKOROWICZ, TPM, (TPM 20986)
PALA INDIAN RESERVATION (MUP 00-099-02)
T-Y NURSERY YARD 5 (AP 05-064)
T-Y NURSERY YARD 6 (AP 05-065)
CA8466 VIA MARIPOSA (MUP 05-047)
PAUMA VALLEY C C REMODEL/ADD P65-034W1M5 (MUP 65-034-06)
JOE WALL TRACTOR SERVICE CELL SITE (MUP 05-051)
CA7499 GIRD (MUP 05-053)
CA7905 GOPHER CANYON (MUP 05-054)
CA5162 BONSALL (MUP 05-055)
RIDGE CREEK TM (TM 5469)
SD 960WILLIAMS / CINGULAR, MUP CELL SITE (MUP 03-134)
SD586-01 HENNING PROPERTY (MUP 04-027)
PARA MI CO. (TPM 20748)
STEHLY TPM (TPM 20905)
KELWOOD DEVELOPMENT FOR REZ 04-024 (STP 04-074)
STP 03-075
KELWOOD DEVELOPMENT FOR REZ 04-024 (REZ 04-024)
TM 5212
CUNNINGHAM , TPM, 2 LOTS (TPM 20788)
MUP 03-015
TM 5014
GREEN CANYON NORTH TM (TM 5553)
GUILD CELL SITE, MAJOR USE PERMIT, P08-0 (MUP 08-007)
GOLF CLUB OF AMERICA MUP MIN DEV, OSV, L (MUP 97-004-02)
NS310-01 HOEPTNER RANCH (MUP 06-002)
CHAMPAGNE LAKES, MUP, MOD (MUP 70-212-02)
GOPHER CANYON CREEK (MUP 00-012-01)
AGAPITO, TPM, 2 LOTS (TPM 20992)
NS303-01 PACIFIC BELL STAGECOACH (MUP 75-093-03)
BONSALL TOWN CENTER (PAA 06-001)
CUFFEL CLARENCE DR (TPM 20993)
MADRIGAL, TPM, 3 LOTS (TPM 20994)
MODULAR SUNDAY CLASS ROOM (MUP 06-025-01)
HOLLINGSWORTH 3.48 ACRES (AP 06-012)
RABBIT RUN, TM, 10 LOTS (TM 5478)
STARKEY FENCE (AP 06-013)
LILAC RIDGE TENTATIVE PARCEL MAP (TPM 20996)
HANCEY, TPM, 4 LOTS (TPM 20999)
SYCAMORE DOWNS OFFICE PARK (STP 06-006)
LAKE RANCHO VIEJO (MUP 81-023-08)
SEVENTH DAY ADVENTIST CHURCH (MUP 87-062-05)
HILL RANCH (AP 06-017)
TAM, TPM, 2 LOTS (TPM 21002)
MCNALLY RD PARCEL MAP (TPM 21004)
WINTERWARM (TPM 21006)
MONSERATE, TPM, (FORMALLY TM 5489) (TPM 21156)
BONSALL TOWN CENTER, GPA, REZ, TM, STP (TM 5490)
HEALD, TPM, 4 LOTS + (TPM 21010)
COUSER CANYON AG CLEARING (AP 06-024)
BRISA DEL MAR (TM 5492)
RABUCHIN CALLE CAONERO (STP 06-018)
PALA 114 (TM 5497)
PFAFF, TPM, 3 LOTS (TPM 21016)
GOLF GREEN ESTATES, TM, 116 LOTS (TM 5498)
CLUB ESTATES (TM 5499)
RANCHO VALLECITO/LILAC RANCH OPEN SPACE (AP 06-031)
SD34XC863C - GUFFANTI RESIDENCE (MUP 06-057)
GOLF CLUB DRIVE DUPLEX, STP, "B" DES. (STP 06-021)
VALENCIA ESTATES (AP 06-034)
IRVINE SECONDARY DWELLING ADDITION (MUP 06-014)
RANCHO LILAC (TM 5385)
DONALD JENKINS TENTATIVE PARCEL MAP (TPM 21023)
MATHENY TPM (TPM 21024)
SD06586B KRIPPNER RESIDENCE (MUP 06-062)
ROSEMARY'S MOUNTAIN QUARRY (MUP 87-021-01)
ZION LUTHERAN CHURCH & SCHOOL 60-120W2M5 (MUP 60-120-07)
PAUMA RANCHES (TM 5506)
WARNER RANCH, GPA, SP, REZ, TM, MUP, AD (TM 5508)
FERRUCCI GARAGE (AP 06-041)
KUEHN, GARRETT (TPM 20633)
CAL-A-VIE (MUP 82-072-05)
DERRIGO-KING BA (BA 06-0124)
LOUCENO CR (STP 06-034)
PACIFICA ESTATES (TM 5510)
SPRINT/NEXTEL YUIMA CREEK CA-8449C (MUP 06-076)
PALA CANYON (PAA 06-015)
ST PETERS CATHOLIC CHURCH W5 M1 (MUP 65-041-09)
CASTLE CREEK CONDOMINIUMS, GPA, SPA, REZ (TM 5514)
LAKE RANCHO VIEJO (MUP 81-023-09)
LAKE RANCHO VIEJO - S05-045W1 (STP 05-045-01)
HAMBLEN (AP 06-056)
FRAME TENTATIVE PARCEL MAP (TPM 21034)
LAB TEST (REZ 2006-02)
SD 06735 A TIERRA VERDE (MUP 06-084)
WEDDING FACILITY (MUP 82-069-03)
NWC CLEMMENS AND MISSION STP (STP 06-044)
CA8448 PLAISTED CREEK (MUP 06-089)
CA7903 VIA ARARAT (MUP 06-090)
ST PETER'S CATHOLIC COMMUNITY MUP W3 (MUP 65-041-06)
KEAKOR, TPM, 4 LOTS (TPM 21037)
OAK TREE RANCH/MUP/MINOR DEVIATION (MUP 73-083-07)
OAK TREE RANCH - MUP MINOR DEVIATION - M (MUP 73-083-08)
LOS ALISOS, BARKER, TPM, 2 LOT (TPM 21040)
ARMSTRONG DETACHED GARAGE/AD (AP 06-068)
PROMINENCE AT PALA AD (AP 06-071)
OAK TREE RANCH TM, MUP, CONDO (TM 5540)
AMERICAN LOTUS BHUDDIST ASSC TPM 4 LOTS (TPM 21047)
TURNBULL, TM, 17 LOTS (TM 5545)
HOLLER ACCESSORY APARTMENT/AD/GRANNY FLA (AP 07-003)
PERRY ENCROACHMENT/AD/OPEN SPACE ENCROAC (AP 07-006)
LAKE RANCHO VIEJO AD OVERSIZED FENCE (AP 07-007)
GAGGERO SUBDIVISION TPM (TPM 21052)
LAKE RANCHO VIEJO UNIT 3 SPA REMOVE RV P (MUP 81-023-10)
SOTELLO ADMIN PERMIT AGRICULTURAL CLEAR (AP 07-009)
TOPETE, TPM, 2 LOT (TPM 21053)
MAHR RESIDENCE, ZAP, 2ND DU (MUP 07-002)
MIRPOUR, STP-MOD FOR COMMERICAL CENTER (STP 96-005-02)
HORSE BARN/AD/OVERSIZED BARN (AP 07-010)
PANARAMIC/BA/2 LOT BOUNDARY ADJUSTMENT (BA 07-0014)
EMERALD HILL TPM 4 LOT + REM SUBDIVISION (TPM 21057)
GOLF GREEN ESTATES/S/SITE PLAN (STP 07-011)
FALLBROOK RANCH TM 11 LOT SUBDIVISION (TM 5532)
TEST FOR DPLU SDE (STP 2007-07)
ERARD PARENTS' HOME MINOR USE PERMIT FOR (MUP 07-005)
PRICE ANIMAL COMPANY MINOR USE PERMIT (MUP 07-006)
SPA HAVENS RESIDENTIAL (STP 07-018)
CAL-A-VIE/MUP MINOR DEV (MUP 82-072-06)
MITCHELL AD OVERSIZED GARAGE (AP 07-020)
BEYE GARAGE AD PERMIT FOR OVERSIZED STRU (AP 07-022)
JAY LONG, TPM, 2 LOTS (TPM 21066)
AMERICAN TOWER MINOR DEVIATION CELL SITE (MUP 69-101-08)
VIA LIMA/TPM/2 LOT SUBDIVISION (TPM 21068)

SINGH, MUP, POWER PLANT (MUP 07-009)
DEVELLE AD OPEN SPACE ENCROACHMENT (AP 07-032)
BLUE TPM (TPM 21073)
BEEBE TPM (TPM 21074)
SUTTNER/AD/ACCESSORY APT (AP 07-033)
DIMITRI, DIFFENDALE, AND KIRK/TPM/4 LOTS (TPM 21075)
SUMAC TPM (TPM 21076)
MMR ASSOICATES MUP MINOR DEVIATION (MUP 02-026-01)
RECHE ROAD,TM,11 LOTS (TM 5547)
BONSALL/MUP MODIFICATION/EXIST. CELL SIT (MUP 90-031-04)
PAUMA VALLEY ESTATES, TM, (TM 5548)
OLSEN WORKSHOP AND ADDITION/ZAP/MINOR DE (MUP 00-073-01)
STOUFFER/TPM/2 LOTS (TPM 21084)
BRANNON TRUST TPM/4 LOTS PLUS REMAINDER (TPM 21085)
YUAN, MINOR SUBDIVISION + REMAINDER, TPM (TPM 21150)
FRUMMET RESIDENCE SD06955/MINOR DEV. (MUP 03-091-01)
B & R PROPERTIES TPM/2 LOTS (TPM 21088)
BELA, MAJOR PRE-APP MEETING, 08-146 (TPM 21168)
LAKE RANCHO VIEJO - S05-045M1 (STP 05-045-02)
PALOMAR BABTIST CAMP,MUP, MINOR DEV (MUP 69-087-05)
PANKEY/AD/TEMP OFFICE TRAILER (AP 07-050)
NEXTEL - COLE GRADE RD - ZAP M1 (MUP 01-114-01)
ARCO AM/PM, AD, ON PREMISE SIGNS (AP 07-054)
SINGH/ZAP-MINOR DEV/ADD KITCHEN & LAUNDR (MUP 00-005-02)
GANGAVALLI, TPM, 2 LOTS (TPM 21101)
PAUMA VALLEY COMMUNITY CHURCH, MINOR DEV (MUP 81-037-02)
AM PM MINI MART STP MINOR DEVIATION (STP 96-039-03)
GAINER, AD OVERSIZED BARN (AP 07-059)
ROBINSON, TPM, 4 LOTS (TPM 21105)
WILSON, AD, OVERSIZED STRUCTURE (AP 07-066)
VISTA TOWERS, MUP CELL SITE (MUP 07-017)
SPRINT/NEXTEL, ZAP, MODIFICATION (MUP 01-114-02)
KIRK,KRIPPNER, AD, FENCE HEIGHT (AP 08-002)
NICKERSON, TENTATIVE PARCEL MAP, TPM2111 (TPM 21119)
HODGSON PATIO ENCLOSURE, MUP MINOR DEVIA (MUP 81-023-11)
ESPINO OVERSIZED GARAGE; AD 08-006 (AP 08-006)
PALOMAR BAPTIST CAMP MAJOR USE PERMIT MO (MUP 69-087-06)
BARFKNECHT, AG CLEARING PERMIT, AD08-011 (AP 08-011)
NORTHGATE GONZALVEZ MARKET, STP MINOR DE (STP 99-051-01)
CARSON, 4 LOT PLUS REMAINDER TPM, TPM 21 (TPM 21124)
FALLBROOK PUBLIC UTILITY, MUP CELL SITE, (MUP 08-024)
GAINER, MAJOR USE PERMIT, P08-052 (MUP 08-052)
FALLBROOK AIRPARK, MUP MINOR DEVIAITON, (MUP 63-120-09)
AT&T SIGNAGE, MINOR DEVIATION, 75-093-04 (MUP 75-093-04)
SAPIEN 10 LOT TM TM 5562 (TM 5562)
ST JOHN'S ANGLICAN CHURCH, MINOR DEV (MUP 00-040-01)
MARINO, ADMIN PERMIT 3D STORY, AD08-039 (AP 08-039)
FALLBROOK ASSEMBLY OF GOD, REPLACE SIGN, (MUP 75-013-02)
TPM 20648
HILL TOP RANCH, 4 LOT + REMAINDER TPM, T (TPM 21129)
AT&T MOBILITY MAJOR USE PERMIT CELL SITE (MUP 08-031)
STILES, TENATIVE PARCEL MAP, TPM 21131 (TPM 21131)
WILBUR, ADMINISTRATIVE PERMIT FOR OVERSI (AP 08-036)
WALL, MAJOR USE PERMIT- CELL SITE, P08-0 (MUP 08-035)
VISTA VALLEY COUNTRY CLUB, SPA AND MUP M (MUP 77-128-05)
SCHULTZ OVERSIZED GARAGE; AD 08-042 (AP 08-042)
GTBO LLC, TENATIVE PARCEL MAP, TPM 21135 (TPM 21135)
OLSON, COTTAGE INDUSTRY, ZAP00-073W1 (MUP 00-073-02)
T-MOBILE, WIRELESS TELECOMMUNICATIONS FA (MUP 06-084-1)
SURREY HEIGHTS, MINOR SUBDIVISION 3 LOTS (TPM 21138)
AT&T MOBILITY, MUP CELL SITE; P08-038 (MUP 08-038)
HALL-MCNARY, OVERSIZED STRUCTURE, AD08-0 (AP 08-049)
VISTA TOWERS- PALA TEMECULA II, MUP CELL (MUP 08-040)
AT&T MOBILITY, WIRELESS FACILITY, P08-04 (MUP 08-041)
T-MOBILE, WIRELESS TELECOM FACILITY, PO8 (MUP 08-042)
HAGERTY/GRAJEK, MINOR SUBDIVISION, TPM21 (TPM 21144)
LAKE RANCHO VIEJO, STP MINOR DEVIATION; (STP 05-045-03)
AT&T CELL SITE, MINOR USE PERMIT MOD; ZA (MUP 03-056-01)
NS0308 PETERMAN, MUP CELL SITE, P 08-045 (MUP 08-045)
SJC, MINOR SUBDIVISION 2 LOTS, TPM211 (TPM 21152)
PALOMAR COMMUNITY COLLEGE GENERAL PLAN A (GPA 09-006)
TAVAREZ, PLAN AMENDMENT AUTHORIZATION, P (PAA 08-009)
MARTIN 2 LOT TPM; TPM 21154 (TPM 21154)
MOODY CREEK FARMS LLC, MUP MOD; P79-134W (MUP 79-134-07)
ANDERSON, 2 LOT TPM; TPM 21155 (TPM 21155)
FERRUCCI, FARM EMPLOYEE HOUSING; AD09-00 (AP 09-009)
VALENCIA, 3 LOT TPM; TPM 21157 (TPM 21157)
HEFNER/BROWN 4 LOT AND REMAINDER TPM: TP (TPM 21159)
SANTACROCE, ZAP 2ND DU; ZAP 09-003 (MUP 09-003)
PEPPER LANE MAJOR USE MINOR DEVIATION P (MUP 81-107-03)
RANCHO CORRIDO RV PARK, MUP MOD; P 67-09 (MUP 67-092-04)
ANTHONY AD DEVIATION FROM APPROVED PRD P (MUP 84-104-07)
PAUMA VALLEY COMMUNITY CENTER MUP MIN DE (MUP 63-162-05)
ACCRETIVE PAA (PAA 09-007)
AT&T SD 0476 PAUMA VALLEY ZAP MOD 94-010 (MUP 94-010-02)
PRATSON AD 2ND DWELLING UNIT AD 09-035 (AP 09-035)
GARNER TPM 21167, STP 09-017 (TPM 21167)
VERIZON LILAC RIDGE MUP P 09-015 (MUP 09-015)
MCDOUGAL AD 2ND DU/BOUNDARY ADJUST CERT (AP 09-057)
WILDE, MAJOR USE PERMIT ADMIN DEVIATION; (MUP 85-016-08)
VERIZON WIRELESS CIRCLE RANCH P 09-017 (MUP 09-017)
WILD, TENTATIVE PARCEL MAP; TPM 21170 (TPM 21170)
AT&T MOBILITY N5310 RICE PROPERTY P 09-0 (MUP 09-020)
NELSON, SITE PLAN B DESIGNATOR; S 09-021 (STP 09-021)
GREGORY CANYON LANDFILL AD BRUSH AND CLE (AP 09-059)

FOULAD AD FOR AG CLEARING AD 10-002 (AP 10-002)
ALCORN AD 10-006 (AP 10-006)
HUTCHINSON ADMINSTRATIVE PERMIT AD 10-00 (AP 10-005)
CA-SDG5095 SAN MARCOS MOUNTAIN MODIFICAT (MUP 69-101-09)
CLEARWIRE CA-SDG5743, ZAP MIN DEV 00-113 (MUP 00-113-03)
T-MOBILE SDO6236 STAGE COACH ZAP MOD 96- (MUP 96-040-01)
FALLBROOK AIRPORT MUP MIN DEV 63-120-12 (MUP 63-120-12)
GHODSI, TPM 21174, 3 LOTS (TPM 21174)
SPA HAVENS, MUP MIN DEV, 3301-82-072-07 (MUP 82-072-07)
BROKEN ROCK RANCH, MUP MIN DEVIATION; P (MUP 70-108-03)
FALLBROOK ASSEMBLY OF GOD, MIN DEV P75- (MUP 75-013-03)
ORMSBY WAY, MUP CELL SITE; P10-007 (MUP 10-007)
LILAC VISTA DR, ZAP MOD; ZAP 03-007-W1 (MUP 03-007-01)
WILSON, ADMINISTRATIVE MINOR DEVIATION A (AP 07-066-01)
VERIZON WIRELESS LILAC RIDGE, MUP CELL S (MUP 10-010)
HERMANSADER OVERSIZED GARAGE, AD10-026 (AP 10-026)
ROSEMARY'S QUARRY, MINOR DEVIATIATION P (MUP 87-021-02)
KOPP, AD PERMIT SIGN PERMIT ON-PREMISE (AP 10-033)
MATZ COMMERCIAL BLDG SITE PLAN B DESIGNA (STP 10-013)
WILSON OVERSIZED GARAGE ADMOD/VAR (AP 07-066-02)
TOP OF THE HILL PROPERTIES LLC, TPM 2118 (TPM 21180)
MC MILLIN, AD 10-036 (AP 10-036)
FAULSTICK 2ND DWELLING UNIT ADMINISTRATI (AP 10-037)
STANNARD, MUP CELL SITE P 10-025 (MUP 10-025)
YUIMA MUNICIAPL WATER DIST, ZAP MIN DEV (MUP 94-010-03)
MT. UNION TELECOM ZAP (MUP 04-018)
AFFINIS

APPENDIX F

PEAK HOUR INTERSECTION ANALYSIS WORKSHEETS CUMULATIVE CONDITIONS

Scenario Report

Scenario:	Ex AM + Cum
Command:	Default Command
Volume:	Ex AM + Cum
Geometry:	Cumulative
Impact Fee:	Default Impact Fee
Trip Generation:	AM
Trip Distribution:	Project
Paths:	Default Path
Routes:	Default Route
Configuration:	Default Configuration

Impact Analysis Report
Level Of Service

Intersection	Base LOS	Base Del/ Veh	Base V/ C	Future LOS	Future Del/ Veh	Future V/ C	Change in	
#201 SR76 & Vista Way	F	252.2	1.683	F	252.2	1.683	+ 0.000	D/V
#202 Mission Ave & River Rd	F	220.3	1.606	F	220.3	1.606	+ 0.000	D/V
#203 Mission Rd & Olive Hill Rd	F	136.4	1.238	F	136.4	1.238	+ 0.000	D/V
#204 SR76 & Mission Rd	F	184.9	1.314	F	184.9	1.314	+ 0.000	D/V
#205 SR76 & Gird Rd	F	165.7	1.445	F	165.7	1.445	+ 0.000	D/V
#206 SR76 & Old Hwy 395	F	160.4	1.270	F	160.4	1.270	+ 0.000	D/V
#207 SR76 & I-15 SB Ramps	F	197.6	1.488	F	197.6	1.488	+ 0.000	D/V
#208 SR76 & I-15 NB Ramps	F	95.8	1.122	F	95.8	1.122	+ 0.000	D/V
#209 SR76 & Pankey Rd	C	21.0	0.424	C	21.0	0.424	+ 0.000	D/V
#210 SR76 & Horse Ranch Creek Rd	B	17.9	0.390	B	17.9	0.390	+ 0.000	D/V
#211 SR76 & Rice Cyn Rd	F	114.7	0.764	F	114.7	0.764	+ 0.000	D/V
#212 SR76 & Couser Cyn Rd	F	69.3	0.611	F	69.3	0.611	+ 0.000	D/V
#214 SR76 & C. Drwy	A	1.6	0.541	A	1.6	0.541	+ 0.000	D/V
#216 SR76 & W. Pala Mission Rd	C	23.9	0.480	C	23.9	0.480	+ 0.000	D/V
#217 Pala Mission Rd & Pala Temecul	B	13.3	0.631	B	13.3	0.631	+ 0.000	V/C
#218 SR76 & Brittain Rd	B	10.8	0.007	B	10.8	0.007	+ 0.000	D/V
#219 SR76 & E. Pala Mission Rd	D	34.0	0.629	D	34.0	0.629	+ 0.000	D/V
#220 SR76 & Lilac Rd	D	25.8	0.339	D	25.8	0.339	+ 0.000	D/V
#221 SR76 & Adams Dr	B	13.9	0.046	B	13.9	0.046	+ 0.000	D/V
#222 SR76 & Cole Grade Rd	F	287.0	1.266	F	287.0	1.266	+ 0.000	D/V

Level Of Service Computation Report
2000 HCM Operations Method (Future Volume Alternative)

Intersection #201 SR76 & Vista Way

Cycle (sec): 180 Critical Vol./Cap.(X): 1.683
Loss Time (sec): 16 Average Delay (sec/veh): 252.2
Optimal Cycle: OPTIMIZED Level Of Service: F

Street Name:	SR76						Vista Way					
Approach:	North Bound			South Bound			East Bound			West Bound		
Movement:	L -	T -	R	L -	T -	R	L -	T -	R	L -	T -	R
Control:	Protected			Protected			Protected			Protected		
Rights:	Include			Include			Include			Include		
Min. Green:	5	5	5	5	5	5	5	5	5	5	5	5
Y+R:	4.0	4.0	4.0	4.0	4.0	4.0	4.0	4.0	4.0	4.0	4.0	4.0
Lanes:	1 0	1 1	0	2 0	0 1	0	0 0	1! 0	0	0 1	0 0	1
Volume Module:												
Base Vol:	80	1099	404	321	1689	24	9	194	286	335	29	308
Growth Adj:	1.00	1.00	1.00	1.00	1.00	1.00	1.00	1.00	1.00	1.00	1.00	1.00
Initial Bse:	80	1099	404	321	1689	24	9	194	286	335	29	308
Added Vol:	0	0	0	0	0	0	0	0	0	0	0	0
PasserByVol:	0	0	0	0	0	0	0	0	0	0	0	0
Initial Fut:	80	1099	404	321	1689	24	9	194	286	335	29	308
User Adj:	1.00	1.00	1.00	1.00	1.00	1.00	1.00	1.00	1.00	1.00	1.00	1.00
PHF Adj:	0.95	0.95	0.95	0.95	0.95	0.95	0.95	0.95	0.95	0.95	0.95	0.95
PHF Volume:	84	1157	425	338	1778	25	9	204	301	353	31	324
Reduct Vol:	0	0	0	0	0	0	0	0	0	0	0	0
Reduced Vol:	84	1157	425	338	1778	25	9	204	301	353	31	324
PCE Adj:	1.00	1.00	1.00	1.00	1.00	1.00	1.00	1.00	1.00	1.00	1.00	1.00
MLF Adj:	1.00	1.00	1.00	1.00	1.00	1.00	1.00	1.00	1.00	1.00	1.00	1.00
FinalVolume:	84	1157	425	338	1778	25	9	204	301	353	31	324
Saturation Flow Module:												
Sat/Lane:	1900	1900	1900	1900	1900	1900	1900	1900	1900	1900	1900	1900
Adjustment:	0.93	0.89	0.89	0.90	0.98	0.98	0.90	0.90	0.90	0.94	0.94	0.83
Lanes:	1.00	1.46	0.54	2.00	0.99	0.01	0.02	0.40	0.58	0.92	0.08	1.00
Final Sat.:	1769	2483	913	3432	1832	26	32	680	1002	1638	142	1583
Capacity Analysis Module:												
Vol/Sat:	0.05	0.47	0.47	0.10	0.97	0.97	0.30	0.30	0.30	0.22	0.22	0.20
Crit Moves:	****				****		****				****	
Green/Cycle:	0.03	0.50	0.50	0.11	0.58	0.58	0.18	0.18	0.18	0.13	0.13	0.13
Volume/Cap:	1.68	0.93	0.93	0.93	1.68	1.68	1.68	1.68	1.68	1.68	1.68	1.60
Uniform Del:	87.5	42.3	42.3	79.9	38.1	38.1	73.9	73.9	73.9	78.5	78.5	78.5
IncremntDel:	379.3	9.9	9.9	30.7	312	311.6	321.3	321	321.3	325.9	326	292.8
InitQueuDel:	0.0	0.0	0.0	0.0	0.0	0.0	0.0	0.0	0.0	0.0	0.0	0.0
Delay Adj:	1.00	1.00	1.00	1.00	1.00	1.00	1.00	1.00	1.00	1.00	1.00	1.00
Delay/Veh:	466.8	52.2	52.2	110.5	350	349.7	395.3	395	395.3	404.3	404	371.3
User DelAdj:	1.00	1.00	1.00	1.00	1.00	1.00	1.00	1.00	1.00	1.00	1.00	1.00
AdjDel/Veh:	466.8	52.2	52.2	110.5	350	349.7	395.3	395	395.3	404.3	404	371.3
LOS by Move:	F	D	D	F	F	F	F	F	F	F	F	F
HCM2kAvgQ:	10	46	46	13	184	184	54	54	54	41	41	34

Level Of Service Computation Report
2000 HCM Operations Method (Future Volume Alternative)

Intersection #202 Mission Ave & River Rd

Cycle (sec): 180 Critical Vol./Cap.(X): 1.606
Loss Time (sec): 16 Average Delay (sec/veh): 220.3
Optimal Cycle: OPTIMIZED Level Of Service: F

Street Name:	SR76						River Rd					
Approach:	North Bound			South Bound			East Bound			West Bound		
Movement:	L -	T -	R	L -	T -	R	L -	T -	R	L -	T -	R
Control:	Protected			Protected			Protected			Protected		
Rights:	Include			Include			Include			Include		
Min. Green:	5	5	5	5	5	5	5	5	5	5	5	5
Y+R:	4.0	4.0	4.0	4.0	4.0	4.0	4.0	4.0	4.0	4.0	4.0	4.0
Lanes:	1 0	1 0	0	0 0	0 1	0	1 0	0 0	1	0 0	0 0	0
Volume Module:												
Base Vol:	155	1613	0	0	1908	273	143	0	176	0	0	0
Growth Adj:	1.00	1.00	1.00	1.00	1.00	1.00	1.00	1.00	1.00	1.00	1.00	1.00
Initial Bse:	155	1613	0	0	1908	273	143	0	176	0	0	0
Added Vol:	0	0	0	0	0	0	0	0	0	0	0	0
PasserByVol:	0	0	0	0	0	0	0	0	0	0	0	0
Initial Fut:	155	1613	0	0	1908	273	143	0	176	0	0	0
User Adj:	1.00	1.00	1.00	1.00	1.00	1.00	1.00	1.00	1.00	1.00	1.00	1.00
PHF Adj:	0.95	0.95	0.95	0.95	0.95	0.95	0.95	0.95	0.95	0.95	0.95	0.95
PHF Volume:	163	1698	0	0	2008	287	151	0	185	0	0	0
Reduct Vol:	0	0	0	0	0	0	0	0	0	0	0	0
Reduced Vol:	163	1698	0	0	2008	287	151	0	185	0	0	0
PCE Adj:	1.00	1.00	1.00	1.00	1.00	1.00	1.00	1.00	1.00	1.00	1.00	1.00
MLF Adj:	1.00	1.00	1.00	1.00	1.00	1.00	1.00	1.00	1.00	1.00	1.00	1.00
FinalVolume:	163	1698	0	0	2008	287	151	0	185	0	0	0
Saturation Flow Module:												
Sat/Lane:	1900	1900	1900	1900	1900	1900	1900	1900	1900	1900	1900	1900
Adjustment:	0.93	0.98	1.00	1.00	0.96	0.96	0.93	1.00	0.83	1.00	1.00	1.00
Lanes:	1.00	1.00	0.00	0.00	0.87	0.13	1.00	0.00	1.00	0.00	0.00	0.00
Final Sat.:	1769	1862	0	0	1601	229	1769	0	1583	0	0	0
Capacity Analysis Module:												
Vol/Sat:	0.09	0.91	0.00	0.00	1.25	1.25	0.09	0.00	0.12	0.00	0.00	0.00
Crit Moves:	****				****				****			
Green/Cycle:	0.06	0.81	0.00	0.00	0.78	0.78	0.07	0.00	0.07	0.00	0.00	0.00
Volume/Cap:	1.61	1.13	0.00	0.00	1.61	1.61	1.17	0.00	1.61	0.00	0.00	0.00
Uniform Del:	84.8	17.1	0.0	0.0	19.7	19.7	83.4	0.0	83.4	0.0	0.0	0.0
IncremntDel:	313.7	65.5	0.0	0.0	276	276.2	131.4	0.0	309.3	0.0	0.0	0.0
InitQueuDel:	0.0	0.0	0.0	0.0	0.0	0.0	0.0	0.0	0.0	0.0	0.0	0.0
Delay Adj:	1.00	1.00	0.00	0.00	1.00	1.00	1.00	0.00	1.00	0.00	0.00	0.00
Delay/Veh:	398.5	82.6	0.0	0.0	296	295.9	214.8	0.0	392.8	0.0	0.0	0.0
User DelAdj:	1.00	1.00	1.00	1.00	1.00	1.00	1.00	1.00	1.00	1.00	1.00	1.00
AdjDel/Veh:	398.5	82.6	0.0	0.0	296	295.9	214.8	0.0	392.8	0.0	0.0	0.0
LOS by Move:	F	F	A	A	F	F	F	A	F	A	A	A
HCM2kAvgQ:	18	115	0	0	226	226	13	0	20	0	0	0

Level Of Service Computation Report
2000 HCM Operations Method (Future Volume Alternative)

Intersection #203 Mission Rd & Olive Hill Rd

Cycle (sec): 180 Critical Vol./Cap.(X): 1.238
Loss Time (sec): 16 Average Delay (sec/veh): 136.4
Optimal Cycle: OPTIMIZED Level Of Service: F

Street Name:	SR76						Olive Hill Rd					
Approach:	North Bound			South Bound			East Bound			West Bound		
Movement:	L	T	R	L	T	R	L	T	R	L	T	R
Control:	Protected			Protected			Protected			Protected		
Rights:	Include			Include			Include			Include		
Min. Green:	5	5	5	5	5	5	5	5	5	5	5	5
Y+R:	4.0	4.0	4.0	4.0	4.0	4.0	4.0	4.0	4.0	4.0	4.0	4.0
Lanes:	1	0	1	1	0	1	0	2	0	1	0	1
Volume Module:												
Base Vol:	133	1383	180	571	2008	189	177	260	209	113	173	316
Growth Adj:	1.00	1.00	1.00	1.00	1.00	1.00	1.00	1.00	1.00	1.00	1.00	1.00
Initial Bse:	133	1383	180	571	2008	189	177	260	209	113	173	316
Added Vol:	0	0	0	0	0	0	0	0	0	0	0	0
PasserByVol:	0	0	0	0	0	0	0	0	0	0	0	0
Initial Fut:	133	1383	180	571	2008	189	177	260	209	113	173	316
User Adj:	1.00	1.00	1.00	1.00	1.00	1.00	1.00	1.00	1.00	1.00	1.00	1.00
PHF Adj:	0.95	0.95	0.95	0.95	0.95	0.95	0.95	0.95	0.95	0.95	0.95	0.95
PHF Volume:	140	1456	189	601	2114	199	186	274	220	119	182	333
Reduct Vol:	0	0	0	0	0	0	0	0	0	0	0	0
Reduced Vol:	140	1456	189	601	2114	199	186	274	220	119	182	333
PCE Adj:	1.00	1.00	1.00	1.00	1.00	1.00	1.00	1.00	1.00	1.00	1.00	1.00
MLF Adj:	1.00	1.00	1.00	1.00	1.00	1.00	1.00	1.00	1.00	1.00	1.00	1.00
FinalVolume:	140	1456	189	601	2114	199	186	274	220	119	182	333
Saturation Flow Module:												
Sat/Lane:	1900	1900	1900	1900	1900	1900	1900	1900	1900	1900	1900	1900
Adjustment:	0.93	0.92	0.92	0.93	0.93	0.83	0.93	0.98	0.83	0.96	0.96	0.83
Lanes:	1.00	1.77	0.23	1.00	2.00	1.00	1.00	1.00	1.00	0.40	0.60	1.00
Final Sat.:	1769	3077	400	1769	3538	1583	1769	1862	1583	722	1105	1583
Capacity Analysis Module:												
Vol/Sat:	0.08	0.47	0.47	0.34	0.60	0.13	0.11	0.15	0.14	0.16	0.16	0.21
Crit Moves:		****		****			****					****
Green/Cycle:	0.08	0.38	0.38	0.27	0.58	0.58	0.09	0.12	0.12	0.13	0.17	0.17
Volume/Cap:	1.03	1.24	1.24	1.24	1.03	0.22	1.24	1.22	1.16	1.22	0.97	1.24
Uniform Del:	83.1	55.6	55.6	65.3	37.8	18.2	82.3	79.2	79.2	77.9	74.3	74.7
IncremntDel:	85.7	114	113.9	124.0	28.3	0.1	151.4	134	114.1	131.4	43.1	135.0
InitQueuDel:	0.0	0.0	0.0	0.0	0.0	0.0	0.0	0.0	0.0	0.0	0.0	0.0
Delay Adj:	1.00	1.00	1.00	1.00	1.00	1.00	1.00	1.00	1.00	1.00	1.00	1.00
Delay/Veh:	168.7	170	169.6	189.3	66.1	18.3	233.7	213	193.3	209.3	117	209.7
User DelAdj:	1.00	1.00	1.00	1.00	1.00	1.00	1.00	1.00	1.00	1.00	1.00	1.00
AdjDel/Veh:	168.7	170	169.6	189.3	66.1	18.3	233.7	213	193.3	209.3	117	209.7
LOS by Move:	F	F	F	F	E	B	F	F	F	F	F	F
HCM2kAvgQ:	11	68	68	49	70	5	17	23	18	26	21	28

Level Of Service Computation Report
2000 HCM Operations Method (Future Volume Alternative)

Intersection #204 SR76 & Mission Rd

Cycle (sec): 180 Critical Vol./Cap.(X): 1.314
Loss Time (sec): 12 Average Delay (sec/veh): 184.9
Optimal Cycle: OPTIMIZED Level Of Service: F

Street Name:	Mission Rd						SR76					
Approach:	North Bound			South Bound			East Bound			West Bound		
Movement:	L	T	R	L	T	R	L	T	R	L	T	R
Control:	Split Phase			Split Phase			Protected			Protected		
Rights:	Include			Include			Include			Include		
Min. Green:	5	5	5	5	5	5	5	5	5	5	5	5
Y+R:	4.0	4.0	4.0	4.0	4.0	4.0	4.0	4.0	4.0	4.0	4.0	4.0
Lanes:	0	0	0	0	0	2	0	0	0	2	0	1
Volume Module:												
Base Vol:	0	0	0	220	0	1072	775	1348	0	0	1962	189
Growth Adj:	1.00	1.00	1.00	1.00	1.00	1.00	1.00	1.00	1.00	1.00	1.00	1.00
Initial Bse:	0	0	0	220	0	1072	775	1348	0	0	1962	189
Added Vol:	0	0	0	0	0	0	0	0	0	0	0	0
PasserByVol:	0	0	0	0	0	0	0	0	0	0	0	0
Initial Fut:	0	0	0	220	0	1072	775	1348	0	0	1962	189
User Adj:	1.00	1.00	1.00	1.00	1.00	1.00	1.00	1.00	1.00	1.00	1.00	1.00
PHF Adj:	0.95	0.95	0.95	0.95	0.95	0.95	0.95	0.95	0.95	0.95	0.95	0.95
PHF Volume:	0	0	0	232	0	1128	816	1419	0	0	2065	199
Reduct Vol:	0	0	0	0	0	0	0	0	0	0	0	0
Reduced Vol:	0	0	0	232	0	1128	816	1419	0	0	2065	199
PCE Adj:	1.00	1.00	1.00	1.00	1.00	1.00	1.00	1.00	1.00	1.00	1.00	1.00
MLF Adj:	1.00	1.00	1.00	1.00	1.00	1.00	1.00	1.00	1.00	1.00	1.00	1.00
FinalVolume:	0	0	0	232	0	1128	816	1419	0	0	2065	199
Saturation Flow Module:												
Sat/Lane:	1900	1900	1900	1900	1900	1900	1900	1900	1900	1900	1900	1900
Adjustment:	1.00	1.00	1.00	0.90	1.00	0.73	0.90	0.98	1.00	1.00	0.93	0.83
Lanes:	0.00	0.00	0.00	2.00	0.00	2.00	2.00	1.00	0.00	0.00	2.00	1.00
Final Sat.:	0	0	0	3432	0	2786	3432	1862	0	0	3538	1583
Capacity Analysis Module:												
Vol/Sat:	0.00	0.00	0.00	0.07	0.00	0.41	0.24	0.76	0.00	0.00	0.58	0.13
Crit Moves:						****	****				****	
Green/Cycle:	0.00	0.00	0.00	0.31	0.00	0.31	0.18	0.60	0.00	0.00	0.44	0.44
Volume/Cap:	0.00	0.00	0.00	0.22	0.00	1.31	1.31	1.28	0.00	0.00	1.31	0.28
Uniform Del:	0.0	0.0	0.0	46.2	0.0	62.3	73.7	36.2	0.0	0.0	50.0	31.8
IncremntDel:	0.0	0.0	0.0	0.1	0.0	149.7	152.6	131	0.0	0.0	146	0.2
InitQueuDel:	0.0	0.0	0.0	0.0	0.0	0.0	0.0	0.0	0.0	0.0	0.0	0.0
Delay Adj:	0.00	0.00	0.00	1.00	0.00	1.00	1.00	1.00	0.00	0.00	1.00	1.00
Delay/Veh:	0.0	0.0	0.0	46.3	0.0	211.9	226.3	167	0.0	0.0	196	32.0
User DelAdj:	1.00	1.00	1.00	1.00	1.00	1.00	1.00	1.00	1.00	1.00	1.00	1.00
AdjDel/Veh:	0.0	0.0	0.0	46.3	0.0	211.9	226.3	167	0.0	0.0	196	32.0
LOS by Move:	A	A	A	D	A	F	F	F	A	A	F	C
HCM2kAvgQ:	0	0	0	5	0	55	37	113	0	0	91	7

Level Of Service Computation Report
2000 HCM Operations Method (Future Volume Alternative)

Intersection #205 SR76 & Gird Rd

Cycle (sec): 180 Critical Vol./Cap.(X): 1.445
Loss Time (sec): 12 Average Delay (sec/veh): 165.7
Optimal Cycle: OPTIMIZED Level Of Service: F

Street Name:	Gird Rd						SR76					
Approach:	North Bound			South Bound			East Bound			West Bound		
Movement:	L	T	R	L	T	R	L	T	R	L	T	R
Control:	Split Phase			Split Phase			Protected			Protected		
Rights:	Include			Include			Include			Include		
Min. Green:	5	5	5	5	5	5	5	5	5	5	5	5
Y+R:	4.0	4.0	4.0	4.0	4.0	4.0	4.0	4.0	4.0	4.0	4.0	4.0
Lanes:	0 0	0	0 0	1 0	0	0 1	1 0	1	0 0	0 0	1	0 1
Volume Module: PM Peak												
Base Vol:	0	0	0	104	0	203	129	1577	0	0	2011	73
Growth Adj:	1.00	1.00	1.00	1.00	1.00	1.00	1.00	1.00	1.00	1.00	1.00	1.00
Initial Bse:	0	0	0	104	0	203	129	1577	0	0	2011	73
Added Vol:	0	0	0	0	0	0	0	0	0	0	0	0
PasserByVol:	0	0	0	0	0	0	0	0	0	0	0	0
Initial Fut:	0	0	0	104	0	203	129	1577	0	0	2011	73
User Adj:	1.00	1.00	1.00	1.00	1.00	1.00	1.00	1.00	1.00	1.00	1.00	1.00
PHF Adj:	0.95	0.95	0.95	0.95	0.95	0.95	0.95	0.95	0.95	0.95	0.95	0.95
PHF Volume:	0	0	0	109	0	214	136	1660	0	0	2117	77
Reduct Vol:	0	0	0	0	0	0	0	0	0	0	0	0
Reduced Vol:	0	0	0	109	0	214	136	1660	0	0	2117	77
PCE Adj:	1.00	1.00	1.00	1.00	1.00	1.00	1.00	1.00	1.00	1.00	1.00	1.00
MLF Adj:	1.00	1.00	1.00	1.00	1.00	1.00	1.00	1.00	1.00	1.00	1.00	1.00
FinalVolume:	0	0	0	109	0	214	136	1660	0	0	2117	77
Saturation Flow Module:												
Sat/Lane:	1900	1900	1900	1900	1900	1900	1900	1900	1900	1900	1900	1900
Adjustment:	1.00	1.00	1.00	0.93	1.00	0.83	0.93	0.98	1.00	1.00	0.98	0.83
Lanes:	0.00	0.00	0.00	1.00	0.00	1.00	1.00	1.00	0.00	0.00	1.00	1.00
Final Sat.:	0	0	0	1769	0	1583	1769	1862	0	0	1862	1583
Capacity Analysis Module:												
Vol/Sat:	0.00	0.00	0.00	0.06	0.00	0.14	0.08	0.89	0.00	0.00	1.14	0.05
Crit Moves:						****	****				****	
Green/Cycle:	0.00	0.00	0.00	0.09	0.00	0.09	0.05	0.81	0.00	0.00	0.79	0.79
Volume/Cap:	0.00	0.00	0.00	0.66	0.00	1.44	1.44	1.10	0.00	0.00	1.44	0.06
Uniform Del:	0.0	0.0	0.0	78.8	0.0	81.6	85.2	16.9	0.0	0.0	19.2	4.3
IncremntDel:	0.0	0.0	0.0	9.6	0.0	234.1	250.0	54.7	0.0	0.0	204	0.0
InitQueuDel:	0.0	0.0	0.0	0.0	0.0	0.0	0.0	0.0	0.0	0.0	0.0	0.0
Delay Adj:	0.00	0.00	0.00	1.00	0.00	1.00	1.00	1.00	0.00	0.00	1.00	1.00
Delay/Veh:	0.0	0.0	0.0	88.5	0.0	315.6	335.3	71.6	0.0	0.0	223	4.3
User DelAdj:	1.00	1.00	1.00	1.00	1.00	1.00	1.00	1.00	1.00	1.00	1.00	1.00
AdjDel/Veh:	0.0	0.0	0.0	88.5	0.0	315.6	335.3	71.6	0.0	0.0	223	4.3
LOS by Move:	A	A	A	F	A	F	F	E	A	A	F	A
HCM2kAvgQ:	0	0	0	7	0	21	14	109	0	0	190	1

Level Of Service Computation Report
2000 HCM Operations Method (Future Volume Alternative)

Intersection #206 SR76 & Old Hwy 395

Cycle (sec): 175 Critical Vol./Cap.(X): 1.270
Loss Time (sec): 16 Average Delay (sec/veh): 160.4
Optimal Cycle: OPTIMIZED Level Of Service: F

Street Name:	Old Hwy 395						SR76					
Approach:	North Bound			South Bound			East Bound			West Bound		
Movement:	L	T	R	L	T	R	L	T	R	L	T	R
Control:	Split Phase			Split Phase			Protected			Protected		
Rights:	Include			Include			Include			Include		
Min. Green:	5	5	5	5	5	5	5	5	5	5	5	5
Y+R:	4.0	4.0	4.0	4.0	4.0	4.0	4.0	4.0	4.0	4.0	4.0	4.0
Lanes:	1 0	0	1 0	0 0	1!	0 0	1 0	1	1 0	1 0	2	0 1
Volume Module: PM Peak												
Base Vol:	311	184	182	554	212	119	116	979	109	128	593	230
Growth Adj:	1.00	1.00	1.00	1.00	1.00	1.00	1.00	1.00	1.00	1.00	1.00	1.00
Initial Bse:	311	184	182	554	212	119	116	979	109	128	593	230
Added Vol:	0	0	0	0	0	0	0	0	0	0	0	0
PasserByVol:	0	0	0	0	0	0	0	0	0	0	0	0
Initial Fut:	311	184	182	554	212	119	116	979	109	128	593	230
User Adj:	1.00	1.00	1.00	1.00	1.00	1.00	1.00	1.00	1.00	1.00	1.00	1.00
PHF Adj:	0.95	0.95	0.95	0.95	0.95	0.95	0.95	0.95	0.95	0.95	0.95	0.95
PHF Volume:	327	194	192	583	223	125	122	1031	115	135	624	242
Reduct Vol:	0	0	0	0	0	0	0	0	0	0	0	0
Reduced Vol:	327	194	192	583	223	125	122	1031	115	135	624	242
PCE Adj:	1.00	1.00	1.00	1.00	1.00	1.00	1.00	1.00	1.00	1.00	1.00	1.00
MLF Adj:	1.00	1.00	1.00	1.00	1.00	1.00	1.00	1.00	1.00	1.00	1.00	1.00
FinalVolume:	327	194	192	583	223	125	122	1031	115	135	624	242
Saturation Flow Module:												
Sat/Lane:	1900	1900	1900	1900	1900	1900	1900	1900	1900	1900	1900	1900
Adjustment:	0.93	0.91	0.91	0.93	0.93	0.93	0.93	0.92	0.92	0.93	0.93	0.83
Lanes:	1.00	0.50	0.50	0.63	0.24	0.13	1.00	1.80	0.20	1.00	2.00	1.00
Final Sat.:	1769	866	856	1110	425	238	1769	3136	349	1769	3538	1568
Capacity Analysis Module:												
Vol/Sat:	0.19	0.22	0.22	0.53	0.53	0.53	0.07	0.33	0.33	0.08	0.18	0.15
Crit Moves:			****	****				****		****		
Green/Cycle:	0.18	0.18	0.18	0.41	0.41	0.41	0.09	0.26	0.26	0.06	0.23	0.23
Volume/Cap:	1.05	1.27	1.27	1.27	1.27	1.27	0.77	1.27	1.27	1.27	0.77	0.67
Uniform Del:	72.1	72.1	72.1	51.3	51.3	51.3	77.9	64.9	64.9	82.3	63.1	61.5
IncremntDel:	64.9	145	144.8	132.0	132	132.0	20.3	130	130.2	176.4	4.5	5.0
InitQueuDel:	0.0	0.0	0.0	0.0	0.0	0.0	0.0	0.0	0.0	0.0	0.0	0.0
Delay Adj:	1.00	1.00	1.00	1.00	1.00	1.00	1.00	1.00	1.00	1.00	1.00	1.00
Delay/Veh:	137.0	217	216.9	183.4	183	183.4	98.2	195	195.0	258.6	67.7	66.5
User DelAdj:	1.00	1.00	1.00	1.00	1.00	1.00	1.00	1.00	1.00	1.00	1.00	1.00
AdjDel/Veh:	137.0	217	216.9	183.4	183	183.4	98.2	195	195.0	258.6	67.7	66.5
LOS by Move:	F	F	F	F	F	F	F	F	F	F	E	E
HCM2kAvgQ:	23	32	32	74	74	74	8	49	49	11	16	11

Level Of Service Computation Report
2000 HCM Operations Method (Future Volume Alternative)

Intersection #207 SR76 & I-15 SB Ramps

Cycle (sec): 180 Critical Vol./Cap.(X): 1.488
Loss Time (sec): 12 Average Delay (sec/veh): 197.6
Optimal Cycle: OPTIMIZED Level Of Service: F

Street Name:	I-15 SB Ramps						SR76					
Approach:	North Bound			South Bound			East Bound			West Bound		
Movement:	L	T	R	L	T	R	L	T	R	L	T	R
Control:	Split Phase			Split Phase			Protected			Protected		
Rights:	Include			Include			Include			Include		
Min. Green:	5	5	5	5	5	5	5	5	5	5	5	5
Y+R:	4.0	4.0	4.0	4.0	4.0	4.0	4.0	4.0	4.0	4.0	4.0	4.0
Lanes:	0	0	0	0	0	0	1	0	0	1	0	0
Volume Module:PM Peak												
Base Vol:	0	0	0	193	4	955	0	1045	405	274	744	0
Growth Adj:	1.00	1.00	1.00	1.00	1.00	1.00	1.00	1.00	1.00	1.00	1.00	1.00
Initial Bse:	0	0	0	193	4	955	0	1045	405	274	744	0
Added Vol:	0	0	0	0	0	0	0	0	0	0	0	0
PasserByVol:	0	0	0	0	0	0	0	0	0	0	0	0
Initial Fut:	0	0	0	193	4	955	0	1045	405	274	744	0
User Adj:	1.00	1.00	1.00	1.00	1.00	1.00	1.00	1.00	1.00	1.00	1.00	1.00
PHF Adj:	0.95	0.95	0.95	0.95	0.95	0.95	0.95	0.95	0.95	0.95	0.95	0.95
PHF Volume:	0	0	0	203	4	1005	0	1100	426	288	783	0
Reduct Vol:	0	0	0	0	0	0	0	0	0	0	0	0
Reduced Vol:	0	0	0	203	4	1005	0	1100	426	288	783	0
PCE Adj:	1.00	1.00	1.00	1.00	1.00	1.00	1.00	1.00	1.00	1.00	1.00	1.00
MLF Adj:	1.00	1.00	1.00	1.00	1.00	1.00	1.00	1.00	1.00	1.00	1.00	1.00
FinalVolume:	0	0	0	203	4	1005	0	1100	426	288	783	0
Saturation Flow Module:												
Sat/Lane:	1900	1900	1900	1900	1900	1900	1900	1900	1900	1900	1900	1900
Adjustment:	1.00	1.00	1.00	0.96	0.96	0.83	1.00	0.98	0.83	0.93	0.98	1.00
Lanes:	0.00	0.00	0.00	0.98	0.02	1.00	0.00	1.00	1.00	1.00	1.00	0.00
Final Sat.:	0	0	0	1779	37	1583	0	1862	1583	1769	1862	0
Capacity Analysis Module:												
Vol/Sat:	0.00	0.00	0.00	0.11	0.11	0.64	0.00	0.59	0.27	0.16	0.42	0.00
Crit Moves:						****		****		****		
Green/Cycle:	0.00	0.00	0.00	0.43	0.43	0.43	0.00	0.40	0.40	0.11	0.48	0.00
Volume/Cap:	0.00	0.00	0.00	0.27	0.27	1.49	0.00	1.49	0.68	1.49	0.89	0.00
Uniform Del:	0.0	0.0	0.0	33.4	33.4	51.6	0.0	54.3	44.8	80.1	42.8	0.0
IncremntDel:	0.0	0.0	0.0	0.2	0.2	227.5	0.0	227	3.0	245.1	10.6	0.0
InitQueuDel:	0.0	0.0	0.0	0.0	0.0	0.0	0.0	0.0	0.0	0.0	0.0	0.0
Delay Adj:	0.00	0.00	0.00	1.00	1.00	1.00	0.00	1.00	1.00	1.00	1.00	0.00
Delay/Veh:	0.0	0.0	0.0	33.6	33.6	279.1	0.0	281	47.8	325.2	53.4	0.0
User DelAdj:	1.00	1.00	1.00	1.00	1.00	1.00	1.00	1.00	1.00	1.00	1.00	1.00
AdjDel/Veh:	0.0	0.0	0.0	33.6	33.6	279.1	0.0	281	47.8	325.2	53.4	0.0
LOS by Move:	A	A	A	C	C	F	A	F	D	F	D	A
HCM2kAvgQ:	0	0	0	7	7	94	0	100	18	26	36	0

Level Of Service Computation Report
2000 HCM Operations Method (Future Volume Alternative)

Intersection #208 SR76 & I-15 NB Ramps

Cycle (sec): 160 Critical Vol./Cap.(X): 1.122
Loss Time (sec): 12 Average Delay (sec/veh): 95.8
Optimal Cycle: OPTIMIZED Level Of Service: F

Street Name:	I-15 NB Ramps						SR76					
Approach:	North Bound			South Bound			East Bound			West Bound		
Movement:	L	T	R	L	T	R	L	T	R	L	T	R
Control:	Split Phase			Split Phase			Protected			Protected		
Rights:	Include			Include			Include			Include		
Min. Green:	5	5	5	5	5	5	5	5	5	5	5	5
Y+R:	4.0	4.0	4.0	4.0	4.0	4.0	4.0	4.0	4.0	4.0	4.0	4.0
Lanes:	0	1	0	0	1	0	0	0	0	1	0	1
Volume Module:PM Peak												
Base Vol:	280	1	320	0	0	0	686	557	0	0	737	181
Growth Adj:	1.00	1.00	1.00	1.00	1.00	1.00	1.00	1.00	1.00	1.00	1.00	1.00
Initial Bse:	280	1	320	0	0	0	686	557	0	0	737	181
Added Vol:	0	0	0	0	0	0	0	0	0	0	0	0
PasserByVol:	0	0	0	0	0	0	0	0	0	0	0	0
Initial Fut:	280	1	320	0	0	0	686	557	0	0	737	181
User Adj:	1.00	1.00	1.00	1.00	1.00	1.00	1.00	1.00	1.00	1.00	1.00	1.00
PHF Adj:	0.95	0.95	0.95	0.95	0.95	0.95	0.95	0.95	0.95	0.95	0.95	0.95
PHF Volume:	295	1	337	0	0	0	722	586	0	0	776	191
Reduct Vol:	0	0	0	0	0	0	0	0	0	0	0	0
Reduced Vol:	295	1	337	0	0	0	722	586	0	0	776	191
PCE Adj:	1.00	1.00	1.00	1.00	1.00	1.00	1.00	1.00	1.00	1.00	1.00	1.00
MLF Adj:	1.00	1.00	1.00	1.00	1.00	1.00	1.00	1.00	1.00	1.00	1.00	1.00
FinalVolume:	295	1	337	0	0	0	722	586	0	0	776	191
Saturation Flow Module:												
Sat/Lane:	1900	1900	1900	1900	1900	1900	1900	1900	1900	1900	1900	1900
Adjustment:	0.91	0.91	0.83	1.00	1.00	1.00	0.93	0.98	1.00	1.00	0.98	0.83
Lanes:	0.99	0.01	1.00	0.00	0.00	0.00	1.00	1.00	0.00	0.00	1.00	1.00
Final Sat.:	1725	6	1583	0	0	0	1769	1862	0	0	1862	1583
Capacity Analysis Module:												
Vol/Sat:	0.17	0.17	0.21	0.00	0.00	0.00	0.41	0.31	0.00	0.00	0.42	0.12
Crit Moves:			****				****				****	
Green/Cycle:	0.19	0.19	0.19	0.00	0.00	0.00	0.36	0.67	0.00	0.00	0.37	0.37
Volume/Cap:	0.90	0.90	1.12	0.00	0.00	0.00	1.12	0.47	0.00	0.00	1.12	0.32
Uniform Del:	63.3	63.3	64.8	0.0	0.0	0.0	50.9	12.8	0.0	0.0	50.3	35.9
IncremntDel:	26.3	26.3	88.9	0.0	0.0	0.0	73.9	0.3	0.0	0.0	72.9	0.3
InitQueuDel:	0.0	0.0	0.0	0.0	0.0	0.0	0.0	0.0	0.0	0.0	0.0	0.0
Delay Adj:	1.00	1.00	1.00	0.00	0.00	0.00	1.00	1.00	0.00	0.00	1.00	1.00
Delay/Veh:	89.6	89.6	153.7	0.0	0.0	0.0	124.8	13.1	0.0	0.0	123	36.3
User DelAdj:	1.00	1.00	1.00	1.00	1.00	1.00	1.00	1.00	1.00	1.00	1.00	1.00
AdjDel/Veh:	89.6	89.6	153.7	0.0	0.0	0.0	124.8	13.1	0.0	0.0	123	36.3
LOS by Move:	F	F	F	A	A	A	F	B	A	A	F	D
HCM2kAvgQ:	17	17	24	0	0	0	42	13	0	0	51	7

Level Of Service Computation Report
2000 HCM Operations Method (Future Volume Alternative)

Intersection #209 SR76 & Pankey Rd

Cycle (sec): 90 | Critical Vol./Cap.(X): 0.424
Loss Time (sec): 0 | Average Delay (sec/veh): 21.0
Optimal Cycle: OPTIMIZED | Level Of Service: C

Street Name:	Pankey Rd						SR76					
Approach:	North Bound			South Bound			East Bound			West Bound		
Movement:	L	T	R	L	T	R	L	T	R	L	T	R
Control:	Protected			Protected			Protected			Protected		
Rights:	Include			Include			Include			Include		
Min. Green:	5	5	5	5	5	5	5	5	5	5	5	5
Y+R:	4.0	4.0	4.0	4.0	4.0	4.0	4.0	4.0	4.0	4.0	4.0	4.0
Lanes:	1	0	2 0	1	1	0	1	0	2 0	1	1	0
Volume Module: >> Count Date: 25 Oct 2006 <<												
Base Vol:	117	248	58	24	165	55	140	701	151	74	604	67
Growth Adj:	1.00	1.00	1.00	1.00	1.00	1.00	1.00	1.00	1.00	1.00	1.00	1.00
Initial Bse:	117	248	58	24	165	55	140	701	151	74	604	67
Added Vol:	0	0	0	0	0	0	0	0	0	0	0	0
PasserByVol:	0	0	0	0	0	0	0	0	0	0	0	0
Initial Fut:	117	248	58	24	165	55	140	701	151	74	604	67
User Adj:	1.00	1.00	1.00	1.00	1.00	1.00	1.00	1.00	1.00	1.00	1.00	1.00
PHF Adj:	0.95	0.95	0.95	0.95	0.95	0.95	0.95	0.95	0.95	0.95	0.95	0.95
PHF Volume:	123	261	61	25	174	58	147	738	159	78	636	71
Reduct Vol:	0	0	0	0	0	0	0	0	0	0	0	0
Reduced Vol:	123	261	61	25	174	58	147	738	159	78	636	71
PCE Adj:	1.00	1.00	1.00	1.00	1.00	1.00	1.00	1.00	1.00	1.00	1.00	1.00
MLF Adj:	1.00	1.00	1.00	1.00	1.00	1.00	1.00	1.00	1.00	1.00	1.00	1.00
FinalVolume:	123	261	61	25	174	58	147	738	159	78	636	71
Saturation Flow Module:												
Sat/Lane:	1900	1900	1900	1900	1900	1900	1900	1900	1900	1900	1900	1900
Adjustment:	0.93	0.93	0.83	0.93	0.90	0.90	0.93	0.93	0.83	0.93	0.92	0.92
Lanes:	1.00	2.00	1.00	1.00	1.50	0.50	1.00	2.00	1.00	1.00	1.80	0.20
Final Sat.:	1769	3538	1583	1769	2555	852	1769	3538	1583	1769	3137	348
Capacity Analysis Module:												
Vol/Sat:	0.07	0.07	0.04	0.01	0.07	0.07	0.08	0.21	0.10	0.04	0.20	0.20
Crit Moves:	****				****		****				****	
Green/Cycle:	0.16	0.19	0.19	0.14	0.16	0.16	0.20	0.53	0.53	0.14	0.48	0.48
Volume/Cap:	0.42	0.40	0.21	0.10	0.42	0.42	0.42	0.39	0.19	0.31	0.42	0.42
Uniform Del:	33.8	32.2	31.1	33.8	34.0	34.0	31.7	12.4	10.9	34.7	15.3	15.3
IncremntDel:	1.0	0.4	0.4	0.2	0.5	0.5	0.8	0.1	0.1	0.7	0.2	0.2
InitQueuDel:	0.0	0.0	0.0	0.0	0.0	0.0	0.0	0.0	0.0	0.0	0.0	0.0
Delay Adj:	1.00	1.00	1.00	1.00	1.00	1.00	1.00	1.00	1.00	1.00	1.00	1.00
Delay/Veh:	34.8	32.6	31.4	34.0	34.6	34.6	32.5	12.5	11.0	35.4	15.5	15.5
User DelAdj:	1.00	1.00	1.00	1.00	1.00	1.00	1.00	1.00	1.00	1.00	1.00	1.00
AdjDel/Veh:	34.8	32.6	31.4	34.0	34.6	34.6	32.5	12.5	11.0	35.4	15.5	15.5
LOS by Move:	C	C	C	C	C	C	C	B	B	D	B	B
HCM2kAvgQ:	3	4	2	1	3	3	4	6	2	2	7	7

Level Of Service Computation Report
2000 HCM Operations Method (Future Volume Alternative)

Intersection #210 SR76 & Horse Ranch Creek Rd

Cycle (sec): 90 | Critical Vol./Cap.(X): 0.390
Loss Time (sec): 0 | Average Delay (sec/veh): 17.9
Optimal Cycle: OPTIMIZED | Level Of Service: B

Street Name:	Horse Ranch Creek Rd						SR76					
Approach:	North Bound			South Bound			East Bound			West Bound		
Movement:	L	T	R	L	T	R	L	T	R	L	T	R
Control:	Protected			Protected			Protected			Protected		
Rights:	Include			Include			Include			Include		
Min. Green:	5	5	5	5	5	5	5	5	5	5	5	5
Y+R:	4.0	4.0	4.0	4.0	4.0	4.0	4.0	4.0	4.0	4.0	4.0	4.0
Lanes:	0	0	1! 0	0	1	0	1! 0	1	1	0	1	0
Volume Module:												
Base Vol:	0	0	0	85	0	219	232	552	0	0	572	72
Growth Adj:	1.00	1.00	1.00	1.00	1.00	1.00	1.00	1.00	1.00	1.00	1.00	1.00
Initial Bse:	0	0	0	85	0	219	232	552	0	0	572	72
Added Vol:	0	0	0	0	0	0	0	0	0	0	0	0
PasserByVol:	0	0	0	0	0	0	0	0	0	0	0	0
Initial Fut:	0	0	0	85	0	219	232	552	0	0	572	72
User Adj:	1.00	1.00	1.00	1.00	1.00	1.00	1.00	1.00	1.00	1.00	1.00	1.00
PHF Adj:	0.95	0.95	0.95	0.95	0.95	0.95	0.95	0.95	0.95	0.95	0.95	0.95
PHF Volume:	0	0	0	89	0	231	244	581	0	0	602	76
Reduct Vol:	0	0	0	0	0	0	0	0	0	0	0	0
Reduced Vol:	0	0	0	89	0	231	244	581	0	0	602	76
PCE Adj:	1.00	1.00	1.00	1.00	1.00	1.00	1.00	1.00	1.00	1.00	1.00	1.00
MLF Adj:	1.00	1.00	1.00	1.00	1.00	1.00	1.00	1.00	1.00	1.00	1.00	1.00
FinalVolume:	0	0	0	89	0	231	244	581	0	0	602	76
Saturation Flow Module:												
Sat/Lane:	1900	1900	1900	1900	1900	1900	1900	1900	1900	1900	1900	1900
Adjustment:	1.00	1.00	1.00	0.86	1.00	0.86	0.93	0.93	0.95	1.00	0.93	0.83
Lanes:	0.00	1.00	0.00	1.28	0.00	1.72	1.00	2.00	0.00	1.00	2.00	1.00
Final Sat.:	0	1900	0	2096	0	2817	1769	3538	0	1900	3538	1583
Capacity Analysis Module:												
Vol/Sat:	0.00	0.00	0.00	0.04	0.00	0.08	0.14	0.16	0.00	0.00	0.17	0.05
Crit Moves:						****	****				****	
Green/Cycle:	0.00	0.00	0.00	0.13	0.00	0.21	0.35	0.59	0.00	0.00	0.44	0.44
Volume/Cap:	0.00	0.00	0.00	0.32	0.00	0.39	0.39	0.28	0.00	0.00	0.39	0.11
Uniform Del:	0.0	0.0	0.0	35.4	0.0	30.6	21.8	9.0	0.0	0.0	17.2	15.0
IncremntDel:	0.0	0.0	0.0	0.2	0.0	0.3	0.4	0.1	0.0	0.0	0.2	0.1
InitQueuDel:	0.0	0.0	0.0	0.0	0.0	0.0	0.0	0.0	0.0	0.0	0.0	0.0
Delay Adj:	0.00	0.00	0.00	1.00	0.00	1.00	1.00	1.00	0.00	0.00	1.00	1.00
Delay/Veh:	0.0	0.0	0.0	35.6	0.0	30.9	22.2	9.1	0.0	0.0	17.4	15.1
User DelAdj:	1.00	1.00	1.00	1.00	1.00	1.00	1.00	1.00	1.00	1.00	1.00	1.00
AdjDel/Veh:	0.0	0.0	0.0	35.6	0.0	30.9	22.2	9.1	0.0	0.0	17.4	15.1
LOS by Move:	A	A	A	D	A	C	C	A	A	A	B	B
HCM2kAvgQ:	0	0	0	2	0	4	5	4	0	0	6	1

Level Of Service Computation Report
2000 HCM Unsignalized Method (Future Volume Alternative)

Intersection #211 SR76 & Rice Cyn Rd

Average Delay (sec/veh): 14.8 Worst Case Level Of Service: F[114.7]

Street Name:	Rice Cyn Rd									SR76						
Approach:	North Bound				South Bound				East Bound				West Bound			
Movement:	L	-	T	-	R	L	-	T	-	R	L	-	T	-	R	L	-	T	-	R
Control:	Stop Sign					Stop Sign					Uncontrolled					Uncontrolled				
Rights:	Include					Include					Include					Include				
Lanes:	0	0	0	0	0	0	0	1!	0	0	0	1	0	0	0	0	0	0	1	0
Volume Module: >> Count Date: 19 Oct 2006 <<																				
Base Vol:	0	0	0	77	0	138	55	943	0	0	450	40								
Growth Adj:	1.00	1.00	1.00	1.00	1.00	1.00	1.00	1.00	1.00	1.00	1.00	1.00								
Initial Bse:	0	0	0	77	0	138	55	943	0	0	450	40								
Added Vol:	0	0	0	0	0	0	0	0	0	0	0	0								
PasserByVol:	0	0	0	0	0	0	0	0	0	0	0	0								
Initial Fut:	0	0	0	77	0	138	55	943	0	0	450	40								
User Adj:	1.00	1.00	1.00	1.00	1.00	1.00	1.00	1.00	1.00	1.00	1.00	1.00								
PHF Adj:	0.95	0.95	0.95	0.95	0.95	0.95	0.95	0.95	0.95	0.95	0.95	0.95								
PHF Volume:	0	0	0	81	0	145	58	993	0	0	474	42								
Reduct Vol:	0	0	0	0	0	0	0	0	0	0	0	0								
FinalVolume:	0	0	0	81	0	145	58	993	0	0	474	42								
Critical Gap Module:																				
Critical Gp:	xxxxx	xxxx	xxxxx	6.4	6.5	6.2	4.1	xxxx	xxxxx	xxxxx	xxxx	xxxxx								
FollowUpTim:	xxxxx	xxxx	xxxxx	3.5	4.0	3.3	2.2	xxxx	xxxxx	xxxxx	xxxx	xxxxx								
Capacity Module:																				
Cnflict Vol:	xxxx	xxxx	xxxxx	1623	1623	515	526	xxxx	xxxxx	xxxx	xxxx	xxxxx								
Potent Cap.:	xxxx	xxxx	xxxxx	113	103	560	1041	xxxx	xxxxx	xxxx	xxxx	xxxxx								
Move Cap.:	xxxx	xxxx	xxxxx	106	95	551	1032	xxxx	xxxxx	xxxx	xxxx	xxxxx								
Volume/Cap:	xxxx	xxxx	xxxx	0.76	0.00	0.26	0.06	xxxx	xxxx	xxxx	xxxx	xxxx								
Level Of Service Module:																				
2Way95thQ:	xxxx	xxxx	xxxxx	xxxx	xxxx	xxxxx	0.2	xxxx	xxxxx	xxxx	xxxx	xxxxx								
Control Del:	xxxxx	xxxx	xxxxx	xxxxx	xxxx	xxxxx	8.7	xxxx	xxxxx	xxxxx	xxxx	xxxxx								
LOS by Move:	*	*	*	*	*	*	A	*	*	*	*	*								
Movement:	LT - LTR - RT			LT - LTR - RT			LT - LTR - RT			LT - LTR - RT										
Shared Cap.:	xxxx	xxxx	xxxxx	xxxx	220	xxxxx	xxxx	xxxx	xxxxx	xxxx	xxxx	xxxxx								
SharedQueue:	xxxxx	xxxx	xxxxx	xxxxx	9.6	xxxxx	0.2	xxxx	xxxxx	xxxxx	xxxx	xxxxx								
Shrd ConDel:	xxxxx	xxxx	xxxxx	xxxxx	115	xxxxx	8.7	xxxx	xxxxx	xxxxx	xxxx	xxxxx								
Shared LOS:	*	*	*	*	F	*	A	*	*	*	*	*								
ApproachDel:	xxxxxx			114.7			xxxxxx			xxxxxx										
ApproachLOS:	*				F		*			*										

Note: Queue reported is the number of cars per lane.

Level Of Service Computation Report
2000 HCM Unsignalized Method (Future Volume Alternative)

Intersection #212 SR76 & Couser Cyn Rd

Average Delay (sec/veh): 5.4 Worst Case Level Of Service: F[69.3]

Street Name:	Couser Cyn Rd									SR76						
Approach:	North Bound				South Bound				East Bound				West Bound			
Movement:	L	-	T	-	R	L	-	T	-	R	L	-	T	-	R	L	-	T	-	R
Control:	Stop Sign					Stop Sign					Uncontrolled					Uncontrolled				
Rights:	Include					Include					Include					Include				
Lanes:	0	0	1!	0	0	0	0	1!	0	0	0	0	1	0	0	1	0	0	0	0
Volume Module:																				
Base Vol:	81	0	32	0	0	0	0	883	32	16	426	0								
Growth Adj:	1.00	1.00	1.00	1.00	1.00	1.00	1.00	1.00	1.00	1.00	1.00	1.00								
Initial Bse:	81	0	32	0	0	0	0	883	32	16	426	0								
Added Vol:	0	0	0	0	0	0	0	0	0	0	0	0								
PasserByVol:	0	0	0	0	0	0	0	0	0	0	0	0								
Initial Fut:	81	0	32	0	0	0	0	883	32	16	426	0								
User Adj:	1.00	1.00	1.00	1.00	1.00	1.00	1.00	1.00	1.00	1.00	1.00	1.00								
PHF Adj:	0.95	0.95	0.95	0.95	0.95	0.95	0.95	0.95	0.95	0.95	0.95	0.95								
PHF Volume:	85	0	34	0	0	0	0	929	34	17	448	0								
Reduct Vol:	0	0	0	0	0	0	0	0	0	0	0	0								
FinalVolume:	85	0	34	0	0	0	0	929	34	17	448	0								
Critical Gap Module:																				
Critical Gp:	6.4	6.5	6.2	7.1	6.5	6.2	xxxxx	xxxx	xxxxx	4.1	xxxx	xxxxx								
FollowUpTim:	3.5	4.0	3.3	3.5	4.0	3.3	xxxxx	xxxx	xxxxx	2.2	xxxx	xxxxx								
Capacity Module:																				
Cnflict Vol:	1448	1448	966	1465	1465	468	xxxx	xxxx	xxxxx	973	xxxx	xxxxx								
Potent Cap.:	145	131	309	106	128	595	xxxx	xxxx	xxxxx	709	xxxx	xxxxx								
Move Cap.:	139	126	304	91	123	585	xxxx	xxxx	xxxxx	703	xxxx	xxxxx								
Volume/Cap:	0.61	0.00	0.11	0.00	0.00	0.00	xxxx	xxxx	xxxx	0.02	xxxx	xxxx								
Level Of Service Module:																				
2Way95thQ:	xxxx	xxxx	xxxxx	xxxx	xxxx	xxxxx	xxxx	xxxx	xxxxx	0.1	xxxx	xxxxx								
Control Del:	xxxxx	xxxx	xxxxx	xxxxx	xxxx	xxxxx	xxxxx	xxxx	xxxxx	10.2	xxxx	xxxxx								
LOS by Move:	*	*	*	*	*	*	*	*	*	B	*	*								
Movement:	LT - LTR - RT			LT - LTR - RT			LT - LTR - RT			LT - LTR - RT										
Shared Cap.:	xxxx	165	xxxxx	xxxx	0	xxxxx	xxxx	xxxx	xxxxx	xxxx	xxxx	xxxxx								
SharedQueue:	xxxxx	4.4	xxxxx	xxxxx	xxxx	xxxxx	xxxxx	xxxx	xxxxx	0.1	xxxx	xxxxx								
Shrd ConDel:	xxxxx	69.3	xxxxx	xxxxx	xxxx	xxxxx	xxxxx	xxxx	xxxxx	10.2	xxxx	xxxxx								
Shared LOS:	*	F	*	*	*	*	*	*	*	B	*	*								
ApproachDel:	69.3			xxxxxx			xxxxxx			xxxxxx										
ApproachLOS:	F			*			*			*										

Note: Queue reported is the number of cars per lane.

Level Of Service Computation Report
2000 HCM Operations Method (Future Volume Alternative)

Intersection #214 SR76 & C. Drwy

Cycle (sec): 90 Critical Vol./Cap.(X): 0.541
Loss Time (sec): 12 Average Delay (sec/veh): 1.6
Optimal Cycle: OPTIMIZED Level Of Service: A

Street Name:	C. Drwy									SR76								
Approach:	North Bound			South Bound			East Bound			West Bound		
Movement:	L	T	R	L	T	R	L	T	R	L	T	R
Control:	Protected			Protected			Permitted			Permitted		
Rights:	Include			Include			Include			Include		
Min. Green:	5	5	5	5	5	5	5	5	5	5	5	5
Y+R:	4.0	4.0	4.0	4.0	4.0	4.0	4.0	4.0	4.0	4.0	4.0	4.0
Lanes:	0	0	1! 0	0	1	0	0	0	1	1	0	1
Volume Module:												
Base Vol:	0	0	0	0	0	0	0	830	0	0	488	0
Growth Adj:	1.00	1.00	1.00	1.00	1.00	1.00	1.00	1.00	1.00	1.00	1.00	1.00
Initial Bse:	0	0	0	0	0	0	0	830	0	0	488	0
Added Vol:	0	0	0	0	0	0	0	0	0	0	0	0
PasserByVol:	0	0	0	0	0	0	0	0	0	0	0	0
Initial Fut:	0	0	0	0	0	0	0	830	0	0	488	0
User Adj:	1.00	1.00	1.00	1.00	1.00	1.00	1.00	1.00	1.00	1.00	1.00	1.00
PHF Adj:	0.95	0.95	0.95	0.95	0.95	0.95	0.95	0.95	0.95	0.95	0.95	0.95
PHF Volume:	0	0	0	0	0	0	0	874	0	0	514	0
Reduct Vol:	0	0	0	0	0	0	0	0	0	0	0	0
Reduced Vol:	0	0	0	0	0	0	0	874	0	0	514	0
PCE Adj:	1.00	1.00	1.00	1.00	1.00	1.00	1.00	1.00	1.00	1.00	1.00	1.00
MLF Adj:	1.00	1.00	1.00	1.00	1.00	1.00	1.00	1.00	1.00	1.00	1.00	1.00
FinalVolume:	0	0	0	0	0	0	0	874	0	0	514	0
Saturation Flow Module:												
Sat/Lane:	1900	1900	1900	1900	1900	1900	1900	1900	1900	1900	1900	1900
Adjustment:	1.00	1.00	1.00	1.00	1.00	1.00	1.00	0.98	1.00	1.00	0.98	1.00
Lanes:	0.00	1.00	0.00	1.00	0.00	1.00	1.00	1.00	0.00	0.00	1.00	1.00
Final Sat.:	0	1900	0	1900	0	1900	1900	1862	0	0	1862	1900
Capacity Analysis Module:												
Vol/Sat:	0.00	0.00	0.00	0.00	0.00	0.00	0.00	0.47	0.00	0.00	0.28	0.00
Crit Moves:								****				
Green/Cycle:	0.00	0.00	0.00	0.00	0.00	0.00	0.00	0.87	0.00	0.00	0.87	0.00
Volume/Cap:	0.00	0.00	0.00	0.00	0.00	0.00	0.00	0.54	0.00	0.00	0.32	0.00
Uniform Del:	0.0	0.0	0.0	0.0	0.0	0.0	0.0	1.5	0.0	0.0	1.1	0.0
IncremntDel:	0.0	0.0	0.0	0.0	0.0	0.0	0.0	0.4	0.0	0.0	0.1	0.0
InitQueuDel:	0.0	0.0	0.0	0.0	0.0	0.0	0.0	0.0	0.0	0.0	0.0	0.0
Delay Adj:	0.00	0.00	0.00	0.00	0.00	0.00	0.00	1.00	0.00	0.00	1.00	0.00
Delay/Veh:	0.0	0.0	0.0	0.0	0.0	0.0	0.0	1.9	0.0	0.0	1.2	0.0
User DelAdj:	1.00	1.00	1.00	1.00	1.00	1.00	1.00	1.00	1.00	1.00	1.00	1.00
AdjDel/Veh:	0.0	0.0	0.0	0.0	0.0	0.0	0.0	1.9	0.0	0.0	1.2	0.0
LOS by Move:	A	A	A	A	A	A	A	A	A	A	A	A
HCM2kAvgQ:	0	0	0	0	0	0	0	7	0	0	3	0

Level Of Service Computation Report
2000 HCM Operations Method (Future Volume Alternative)

Intersection #216 SR76 & W. Pala Mission Rd

Cycle (sec): 90 Critical Vol./Cap.(X): 0.480
Loss Time (sec): 12 Average Delay (sec/veh): 23.9
Optimal Cycle: OPTIMIZED Level Of Service: C

Street Name:	W. Pala Mission Rd									SR76		
Approach:	North Bound			South Bound			East Bound			West Bound		
Movement:	L	T	R	L	T	R	L	T	R	L	T	R
Control:	Split Phase			Split Phase			Protected			Protected		
Rights:	Include			Include			Include			Include		
Min. Green:	5	5	5	5	5	5	5	5	5	5	5	5
Y+R:	4.0	4.0	4.0	4.0	4.0	4.0	4.0	4.0	4.0	4.0	4.0	4.0
Lanes:	1	0	0 1	0	0	1	0	0	1	1	0	0 1
Volume Module:												
Base Vol:	32	12	5	27	20	140	206	405	50	16	281	34
Growth Adj:	1.00	1.00	1.00	1.00	1.00	1.00	1.00	1.00	1.00	1.00	1.00	1.00
Initial Bse:	32	12	5	27	20	140	206	405	50	16	281	34
Added Vol:	0	0	0	0	0	0	0	0	0	0	0	0
PasserByVol:	0	0	0	0	0	0	0	0	0	0	0	0
Initial Fut:	32	12	5	27	20	140	206	405	50	16	281	34
User Adj:	1.00	1.00	1.00	1.00	1.00	1.00	1.00	1.00	1.00	1.00	1.00	1.00
PHF Adj:	0.95	0.95	0.95	0.95	0.95	0.95	0.95	0.95	0.95	0.95	0.95	0.95
PHF Volume:	34	13	5	28	21	147	217	426	53	17	296	36
Reduct Vol:	0	0	0	0	0	0	0	0	0	0	0	0
Reduced Vol:	34	13	5	28	21	147	217	426	53	17	296	36
PCE Adj:	1.00	1.00	1.00	1.00	1.00	1.00	1.00	1.00	1.00	1.00	1.00	1.00
MLF Adj:	1.00	1.00	1.00	1.00	1.00	1.00	1.00	1.00	1.00	1.00	1.00	1.00
FinalVolume:	34	13	5	28	21	147	217	426	53	17	296	36
Saturation Flow Module:												
Sat/Lane:	1900	1900	1900	1900	1900	1900	1900	1900	1900	1900	1900	1900
Adjustment:	0.93	0.94	0.94	0.95	0.95	0.83	0.93	0.92	0.92	0.93	0.96	0.96
Lanes:	1.00	0.71	0.29	0.57	0.43	1.00	1.00	1.78	0.22	1.00	0.89	0.11
Final Sat.:	1769	1257	524	1040	770	1583	1769	3099	383	1769	1634	198
Capacity Analysis Module:												
Vol/Sat:	0.02	0.01	0.01	0.03	0.03	0.09	0.12	0.14	0.14	0.01	0.18	0.18
Crit Moves:	****					****	****				****	
Green/Cycle:	0.06	0.06	0.06	0.19	0.19	0.19	0.25	0.44	0.44	0.18	0.37	0.37
Volume/Cap:	0.34	0.18	0.18	0.14	0.14	0.49	0.49	0.31	0.31	0.05	0.49	0.49
Uniform Del:	40.9	40.5	40.5	30.3	30.3	32.5	28.8	16.2	16.2	30.7	21.8	21.8
IncremntDel:	2.1	0.9	0.9	0.2	0.2	1.3	0.9	0.1	0.1	0.1	0.6	0.6
InitQueuDel:	0.0	0.0	0.0	0.0	0.0	0.0	0.0	0.0	0.0	0.0	0.0	0.0
Delay Adj:	1.00	1.00	1.00	1.00	1.00	1.00	1.00	1.00	1.00	1.00	1.00	1.00
Delay/Veh:	43.0	41.4	41.4	30.5	30.5	33.8	29.6	16.4	16.4	30.7	22.4	22.4
User DelAdj:	1.00	1.00	1.00	1.00	1.00	1.00	1.00	1.00	1.00	1.00	1.00	1.00
AdjDel/Veh:	43.0	41.4	41.4	30.5	30.5	33.8	29.6	16.4	16.4	30.7	22.4	22.4
LOS by Move:	D	D	D	C	C	C	C	B	B	C	C	C
HCM2kAvgQ:	1	1	1	1	1	4	6	5	5	0	7	7

Level Of Service Computation Report
2000 HCM 4-Way Stop Method (Future Volume Alternative)

Intersection #217 Pala Mission Rd & Pala Temecula Rd

Cycle (sec): 100 Critical Vol./Cap.(X): 0.631
Loss Time (sec): 0 Average Delay (sec/veh): 13.3
Optimal Cycle: 0 Level Of Service: B

Street Name:	Pala Temecula Rd						Pala Mission Rd					
Approach:	North Bound			South Bound			East Bound			West Bound		
Movement:	L -	T -	R	L -	T -	R	L -	T -	R	L -	T -	R
Control:	Stop Sign			Stop Sign			Stop Sign			Stop Sign		
Rights:	Include			Include			Include			Include		
Min. Green:	5	5	5	5	5	5	5	5	5	5	5	5
Lanes:	0 0	0 1	0	0 0	1! 0	0	0 0	1! 0	0	0 0	1! 0	0
Volume Module:												
Base Vol:	0	8	11	214	50	159	205	61	5	1	19	114
Growth Adj:	1.00	1.00	1.00	1.00	1.00	1.00	1.00	1.00	1.00	1.00	1.00	1.00
Initial Bse:	0	8	11	214	50	159	205	61	5	1	19	114
Added Vol:	0	0	0	0	0	0	0	0	0	0	0	0
PasserByVol:	0	0	0	0	0	0	0	0	0	0	0	0
Initial Fut:	0	8	11	214	50	159	205	61	5	1	19	114
User Adj:	1.00	1.00	1.00	1.00	1.00	1.00	1.00	1.00	1.00	1.00	1.00	1.00
PHF Adj:	0.95	0.95	0.95	0.95	0.95	0.95	0.95	0.95	0.95	0.95	0.95	0.95
PHF Volume:	0	8	12	225	53	167	216	64	5	1	20	120
Reduct Vol:	0	0	0	0	0	0	0	0	0	0	0	0
Reduced Vol:	0	8	12	225	53	167	216	64	5	1	20	120
PCE Adj:	1.00	1.00	1.00	1.00	1.00	1.00	1.00	1.00	1.00	1.00	1.00	1.00
MLF Adj:	1.00	1.00	1.00	1.00	1.00	1.00	1.00	1.00	1.00	1.00	1.00	1.00
FinalVolume:	0	8	12	225	53	167	216	64	5	1	20	120
Saturation Flow Module:												
Adjustment:	1.00	1.00	1.00	1.00	1.00	1.00	1.00	1.00	1.00	1.00	1.00	1.00
Lanes:	0.00	0.42	0.58	0.51	0.12	0.37	0.76	0.22	0.02	0.01	0.14	0.85
Final Sat.:	0	251	345	357	83	265	475	141	12	5	93	559
Capacity Analysis Module:												
Vol/Sat:	xxxx	0.03	0.03	0.63	0.63	0.63	0.45	0.45	0.45	0.21	0.21	0.21
Crit Moves:		****			****		****				****	
Delay/Veh:	0.0	8.5	8.5	15.4	15.4	15.4	12.5	12.5	12.5	9.3	9.3	9.3
Delay Adj:	1.00	1.00	1.00	1.00	1.00	1.00	1.00	1.00	1.00	1.00	1.00	1.00
AdjDel/Veh:	0.0	8.5	8.5	15.4	15.4	15.4	12.5	12.5	12.5	9.3	9.3	9.3
LOS by Move:	*	A	A	C	C	C	B	B	B	A	A	A
ApproachDel:		8.5			15.4			12.5			9.3	
Delay Adj:		1.00			1.00			1.00			1.00	
ApprAdjDel:		8.5			15.4			12.5			9.3	
LOS by Appr:		A			C			B			A	
AllWayAvgQ:	0.0	0.0	0.0	1.5	1.5	1.5	0.7	0.7	0.7	0.2	0.2	0.2

Note: Queue reported is the number of cars per lane.

Level Of Service Computation Report
2000 HCM Unsignalized Method (Future Volume Alternative)

Intersection #218 SR76 & Brittain Rd

Average Delay (sec/veh): 0.1 Worst Case Level Of Service: B[10.8]

Street Name:	Brittain Rd						SR76					
Approach:	North Bound			South Bound			East Bound			West Bound		
Movement:	L -	T -	R	L -	T -	R	L -	T -	R	L -	T -	R
Control:	Stop Sign			Stop Sign			Uncontrolled			Uncontrolled		
Rights:	Include			Include			Include			Include		
Lanes:	0 0	0 0	0	0 0	1! 0	0	0 1	0 0	0	0 0	0 1	0
Volume Module:												
Base Vol:	0	0	0	1	0	5	5	436	0	0	293	1
Growth Adj:	1.00	1.00	1.00	1.00	1.00	1.00	1.00	1.00	1.00	1.00	1.00	1.00
Initial Bse:	0	0	0	1	0	5	5	436	0	0	293	1
Added Vol:	0	0	0	0	0	0	0	0	0	0	0	0
PasserByVol:	0	0	0	0	0	0	0	0	0	0	0	0
Initial Fut:	0	0	0	1	0	5	5	436	0	0	293	1
User Adj:	1.00	1.00	1.00	1.00	1.00	1.00	1.00	1.00	1.00	1.00	1.00	1.00
PHF Adj:	0.95	0.95	0.95	0.95	0.95	0.95	0.95	0.95	0.95	0.95	0.95	0.95
PHF Volume:	0	0	0	1	0	5	5	459	0	0	308	1
Reduct Vol:	0	0	0	0	0	0	0	0	0	0	0	0
FinalVolume:	0	0	0	1	0	5	5	459	0	0	308	1
Critical Gap Module:												
Critical Gp:	xxxxx	xxxx	xxxxx	6.4	6.5	6.2	4.1	xxxx	xxxxx	xxxxx	xxxx	xxxxx
FollowUpTim:	xxxxx	xxxx	xxxxx	3.5	4.0	3.3	2.2	xxxx	xxxxx	xxxxx	xxxx	xxxxx
Capacity Module:												
Cnflict Vol:	xxxx	xxxx	xxxxx	778	778	309	309	xxxx	xxxxx	xxxx	xxxx	xxxxx
Potent Cap.:	xxxx	xxxx	xxxxx	365	327	731	1251	xxxx	xxxxx	xxxx	xxxx	xxxxx
Move Cap.:	xxxx	xxxx	xxxxx	363	326	731	1251	xxxx	xxxxx	xxxx	xxxx	xxxxx
Volume/Cap:	xxxx	xxxx	xxxx	0.00	0.00	0.01	0.00	xxxx	xxxx	xxxx	xxxx	xxxx
Level Of Service Module:												
2Way95thQ:	xxxx	xxxx	xxxxx	xxxx	xxxx	xxxxx	0.0	xxxx	xxxxx	xxxx	xxxx	xxxxx
Control Del:	xxxxx	xxxx	xxxxx	xxxxx	xxxx	xxxxx	7.9	xxxx	xxxxx	xxxxx	xxxx	xxxxx
LOS by Move:	*	*	*	*	*	*	A	*	*	*	*	*
Movement:	LT -	LTR -	RT	LT -	LTR -	RT	LT -	LTR -	RT	LT -	LTR -	RT
Shared Cap.:	xxxx	xxxx	xxxxx	xxxx	626	xxxxx	xxxx	xxxx	xxxxx	xxxx	xxxx	xxxxx
SharedQueue:	xxxxx	xxxx	xxxxx	xxxxx	0.0	xxxxx	0.0	xxxx	xxxxx	xxxxx	xxxx	xxxxx
Shrd ConDel:	xxxxx	xxxx	xxxxx	xxxxx	10.8	xxxxx	7.9	xxxx	xxxxx	xxxxx	xxxx	xxxxx
Shared LOS:	*	*	*	*	B	*	A	*	*	*	*	*
ApproachDel:	xxxxxx			10.8			xxxxxx			xxxxxx		
ApproachLOS:	*			B			*			*		

Note: Queue reported is the number of cars per lane.

Level Of Service Computation Report
2000 HCM Unsignalized Method (Future Volume Alternative)

Intersection #219 SR76 & E. Pala Mission Rd

Average Delay (sec/veh): 6.2 Worst Case Level Of Service: D[34.0]

Street Name:	E. Pala Mission Rd									SR76						
Approach:	North Bound				South Bound				East Bound				West Bound			
Movement:	L	-	T	-	R	L	-	T	-	R	L	-	T	-	R	L	-	T	-	R
Control:	Stop Sign					Stop Sign					Uncontrolled					Uncontrolled				
Rights:	Include					Include					Include					Include				
Lanes:	0	0	0	0	0	0	0	1!	0	0	0	1	0	0	0	0	0	0	1	0
Volume Module:																				
Base Vol:	0	0	0	189	0	4	8	436	0	0	278	149								
Growth Adj:	1.00	1.00	1.00	1.00	1.00	1.00	1.00	1.00	1.00	1.00	1.00	1.00								
Initial Bse:	0	0	0	189	0	4	8	436	0	0	278	149								
Added Vol:	0	0	0	0	0	0	0	0	0	0	0	0								
PasserByVol:	0	0	0	0	0	0	0	0	0	0	0	0								
Initial Fut:	0	0	0	189	0	4	8	436	0	0	278	149								
User Adj:	1.00	1.00	1.00	1.00	1.00	1.00	1.00	1.00	1.00	1.00	1.00	1.00								
PHF Adj:	0.95	0.95	0.95	0.95	0.95	0.95	0.95	0.95	0.95	0.95	0.95	0.95								
PHF Volume:	0	0	0	199	0	4	8	459	0	0	293	157								
Reduct Vol:	0	0	0	0	0	0	0	0	0	0	0	0								
FinalVolume:	0	0	0	199	0	4	8	459	0	0	293	157								
Critical Gap Module:																				
Critical Gp:	xxxxx	xxxx	xxxxx	6.4	6.5	6.2	4.1	xxxx	xxxxx	xxxxx	xxxx	xxxxx								
FollowUpTim:	xxxxx	xxxx	xxxxx	3.5	4.0	3.3	2.2	xxxx	xxxxx	xxxxx	xxxx	xxxxx								
Capacity Module:																				
Cnflict Vol:	xxxx	xxxx	xxxxx	867	867	391	459	xxxx	xxxxx	xxxx	xxxx	xxxxx								
Potent Cap.:	xxxx	xxxx	xxxxx	323	291	658	1102	xxxx	xxxxx	xxxx	xxxx	xxxxx								
Move Cap.:	xxxx	xxxx	xxxxx	316	284	647	1092	xxxx	xxxxx	xxxx	xxxx	xxxxx								
Volume/Cap:	xxxx	xxxx	xxxx	0.63	0.00	0.01	0.01	xxxx	xxxx	xxxx	xxxx	xxxx								
Level Of Service Module:																				
2Way95thQ:	xxxx	xxxx	xxxxx	xxxx	xxxx	xxxxx	0.0	xxxx	xxxxx	xxxx	xxxx	xxxxx								
Control Del:	xxxxx	xxxx	xxxxx	xxxxx	xxxx	xxxxx	8.3	xxxx	xxxxx	xxxxx	xxxx	xxxxx								
LOS by Move:	*	*	*	*	*	*	A	*	*	*	*	*								
Movement:	LT	-	LTR	-	RT	LT	-	LTR	-	RT	LT	-	LTR	-	RT					
Shared Cap.:	xxxx	xxxx	xxxxx	xxxx	319	xxxxx	xxxx	xxxx	xxxxx	xxxx	xxxx	xxxxx								
SharedQueue:	xxxxx	xxxx	xxxxx	xxxxx	4.1	xxxxx	0.0	xxxx	xxxxx	xxxxx	xxxx	xxxxx								
Shrd ConDel:	xxxxx	xxxx	xxxxx	xxxxx	34.0	xxxxx	8.3	xxxx	xxxxx	xxxxx	xxxx	xxxxx								
Shared LOS:	*	*	*	*	D	*	A	*	*	*	*	*								
ApproachDel:	xxxxxx			34.0			xxxxxx			xxxxxx										
ApproachLOS:	*				D		*			*										

Note: Queue reported is the number of cars per lane.

Level Of Service Computation Report
2000 HCM Unsignalized Method (Future Volume Alternative)

Intersection #220 SR76 & Lilac Rd

Average Delay (sec/veh): 2.4 Worst Case Level Of Service: D[25.8]

Street Name:	Lilac Rd									SR76						
Approach:	North Bound				South Bound				East Bound				West Bound			
Movement:	L	-	T	-	R	L	-	T	-	R	L	-	T	-	R	L	-	T	-	R
Control:	Stop Sign					Stop Sign					Uncontrolled					Uncontrolled				
Rights:	Include					Include					Include					Include				
Lanes:	0	0	1!	0	0	0	0	0	0	0	0	0	0	1	0	0	1	0	0	0
Volume Module:																				
Base Vol:	81	0	20	0	0	0	0	578	39	10	374	0								
Growth Adj:	1.00	1.00	1.00	1.00	1.00	1.00	1.00	1.00	1.00	1.00	1.00	1.00								
Initial Bse:	81	0	20	0	0	0	0	578	39	10	374	0								
Added Vol:	0	0	0	0	0	0	0	0	0	0	0	0								
PasserByVol:	0	0	0	0	0	0	0	0	0	0	0	0								
Initial Fut:	81	0	20	0	0	0	0	578	39	10	374	0								
User Adj:	1.00	1.00	1.00	1.00	1.00	1.00	1.00	1.00	1.00	1.00	1.00	1.00								
PHF Adj:	0.95	0.95	0.95	0.95	0.95	0.95	0.95	0.95	0.95	0.95	0.95	0.95								
PHF Volume:	85	0	21	0	0	0	0	608	41	11	394	0								
Reduct Vol:	0	0	0	0	0	0	0	0	0	0	0	0								
FinalVolume:	85	0	21	0	0	0	0	608	41	11	394	0								
Critical Gap Module:																				
Critical Gp:	6.4	6.5	6.2	xxxxx	xxxx	xxxxx	xxxxx	xxxx	xxxxx	4.1	xxxx	xxxxx								
FollowUpTim:	3.5	4.0	3.3	xxxxx	xxxx	xxxxx	xxxxx	xxxx	xxxxx	2.2	xxxx	xxxxx								
Capacity Module:																				
Cnflict Vol:	1044	1044	629	xxxx	xxxx	xxxxx	xxxx	xxxx	xxxxx	649	xxxx	xxxxx								
Potent Cap.:	254	229	482	xxxx	xxxx	xxxxx	xxxx	xxxx	xxxxx	937	xxxx	xxxxx								
Move Cap.:	252	227	482	xxxx	xxxx	xxxxx	xxxx	xxxx	xxxxx	937	xxxx	xxxxx								
Volume/Cap:	0.34	0.00	0.04	xxxx	xxxx	xxxx	xxxx	xxxx	xxxx	0.01	xxxx	xxxx								
Level Of Service Module:																				
2Way95thQ:	xxxx	xxxx	xxxxx	xxxx	xxxx	xxxxx	xxxx	xxxx	xxxxx	0.0	xxxx	xxxxx								
Control Del:	xxxxx	xxxx	xxxxx	xxxxx	xxxx	xxxxx	xxxxx	xxxx	xxxxx	8.9	xxxx	xxxxx								
LOS by Move:	*	*	*	*	*	*	*	*	*	A	*	*								
Movement:	LT	-	LTR	-	RT	LT	-	LTR	-	RT	LT	-	LTR	-	RT					
Shared Cap.:	xxxx	278	xxxxx	xxxx	xxxx	xxxxx	xxxx	xxxx	xxxxx	xxxx	xxxx	xxxxx								
SharedQueue:	xxxxx	1.7	xxxxx	xxxxx	xxxx	xxxxx	xxxxx	xxxx	xxxxx	0.0	xxxx	xxxxx								
Shrd ConDel:	xxxxx	25.8	xxxxx	xxxxx	xxxx	xxxxx	xxxxx	xxxx	xxxxx	8.9	xxxx	xxxxx								
Shared LOS:	*	D	*	*	*	*	*	*	*	A	*	*								
ApproachDel:	25.8			xxxxxx			xxxxxx			xxxxxx										
ApproachLOS:	D				*			*			*									

Note: Queue reported is the number of cars per lane.

Level Of Service Computation Report
2000 HCM Unsignalized Method (Future Volume Alternative)

Intersection #221 SR76 & Adams Dr

Average Delay (sec/veh): 0.6 Worst Case Level Of Service: B[13.9]

Street Name:	Adams Dr									SR76							
Approach:	North Bound				South Bound				East Bound				West Bound				
Movement:	L	-	T	-	R	L	-	T	-	R	L	-	T	-	R	L	-	T	-	R
Control:	Stop Sign					Stop Sign					Uncontrolled					Uncontrolled				
Rights:	Include					Include					Include					Include				
Lanes:	0	0	1!	0	0	0	0	1!	0	0	0	1	0	0	0	0	0	0	1	0
Volume Module:																				
Base Vol:	0	0	0	11	0	27	10	584	0	0	387	5								
Growth Adj:	1.00	1.00	1.00	1.00	1.00	1.00	1.00	1.00	1.00	1.00	1.00	1.00								
Initial Bse:	0	0	0	11	0	27	10	584	0	0	387	5								
Added Vol:	0	0	0	0	0	0	0	0	0	0	0	0								
PasserByVol:	0	0	0	0	0	0	0	0	0	0	0	0								
Initial Fut:	0	0	0	11	0	27	10	584	0	0	387	5								
User Adj:	1.00	1.00	1.00	1.00	1.00	1.00	1.00	1.00	1.00	1.00	1.00	1.00								
PHF Adj:	0.95	0.95	0.95	0.95	0.95	0.95	0.95	0.95	0.95	0.95	0.95	0.95								
PHF Volume:	0	0	0	12	0	28	11	615	0	0	407	5								
Reduct Vol:	0	0	0	0	0	0	0	0	0	0	0	0								
FinalVolume:	0	0	0	12	0	28	11	615	0	0	407	5								
Critical Gap Module:																				
Critical Gp:	7.1	6.5	6.2	6.4	6.5	6.2	4.1	xxxx	xxxxx	xxxxx	xxxx	xxxxx								
FollowUpTim:	3.5	4.0	3.3	3.5	4.0	3.3	2.2	xxxx	xxxxx	xxxxx	xxxx	xxxxx								
Capacity Module:																				
Cnflict Vol:	1060	1048	615	1046	1046	410	413	xxxx	xxxxx	xxxx	xxxx	xxxxx								
Potent Cap.:	202	228	491	253	228	642	1146	xxxx	xxxxx	xxxx	xxxx	xxxxx								
Move Cap.:	192	226	491	251	226	642	1146	xxxx	xxxxx	xxxx	xxxx	xxxxx								
Volume/Cap:	0.00	0.00	0.00	0.05	0.00	0.04	0.01	xxxx	xxxx	xxxx	xxxx	xxxx								
Level Of Service Module:																				
2Way95thQ:	xxxx	xxxx	xxxxx	xxxx	xxxx	xxxxx	0.0	xxxx	xxxxx	xxxx	xxxx	xxxxx								
Control Del:	xxxxx	xxxx	xxxxx	xxxxx	xxxx	xxxxx	8.2	xxxx	xxxxx	xxxxx	xxxx	xxxxx								
LOS by Move:	*	*	*	*	*	*	A	*	*	*	*	*								
Movement:	LT	-	LTR	-	RT	LT	-	LTR	-	RT	LT	-	LTR	-	RT	LT	-	LTR	-	RT
Shared Cap.:	xxxx	0	xxxxx	xxxx	443	xxxxx	xxxx	xxxx	xxxxx	xxxx	xxxx	xxxxx								
SharedQueue:	xxxxx	xxxx	xxxxx	xxxxx	0.3	xxxxx	0.0	xxxx	xxxxx	xxxxx	xxxx	xxxxx								
Shrd ConDel:	xxxxx	xxxx	xxxxx	xxxxx	13.9	xxxxx	8.2	xxxx	xxxxx	xxxxx	xxxx	xxxxx								
Shared LOS:	*	*	*	*	B	*	A	*	*	*	*	*								
ApproachDel:	xxxxxx				13.9		xxxxxx				xxxxxx									
ApproachLOS:	*				B		*				*									

Note: Queue reported is the number of cars per lane.

Level Of Service Computation Report
2000 HCM Unsignalized Method (Future Volume Alternative)

Intersection #222 SR76 & Cole Grade Rd

Average Delay (sec/veh): 63.3 Worst Case Level Of Service: F[287.0]

Street Name:	Cole Grade Rd									SR76							
Approach:	North Bound				South Bound				East Bound				West Bound				
Movement:	L	-	T	-	R	L	-	T	-	R	L	-	T	-	R	L	-	T	-	R
Control:	Stop Sign					Stop Sign					Uncontrolled					Uncontrolled				
Rights:	Include					Include					Include					Include				
Lanes:	0	0	1!	0	0	0	0	0	1	0	0	0	1!	0	0	0	0	1!	0	0
Volume Module:																				
Base Vol:	193	0	102	0	2	3	2	507	131	75	333	3								
Growth Adj:	1.00	1.00	1.00	1.00	1.00	1.00	1.00	1.00	1.00	1.00	1.00	1.00								
Initial Bse:	193	0	102	0	2	3	2	507	131	75	333	3								
Added Vol:	0	0	0	0	0	0	0	0	0	0	0	0								
PasserByVol:	0	0	0	0	0	0	0	0	0	0	0	0								
Initial Fut:	193	0	102	0	2	3	2	507	131	75	333	3								
User Adj:	1.00	1.00	1.00	1.00	1.00	1.00	1.00	1.00	1.00	1.00	1.00	1.00								
PHF Adj:	0.95	0.95	0.95	0.95	0.95	0.95	0.95	0.95	0.95	0.95	0.95	0.95								
PHF Volume:	203	0	107	0	2	3	2	534	138	79	351	3								
Reduct Vol:	0	0	0	0	0	0	0	0	0	0	0	0								
FinalVolume:	203	0	107	0	2	3	2	534	138	79	351	3								
Critical Gap Module:																				
Critical Gp:	7.1	6.5	6.2	xxxxx	6.5	6.2	4.1	xxxx	xxxxx	4.1	xxxx	xxxxx								
FollowUpTim:	3.5	4.0	3.3	xxxxx	4.0	3.3	2.2	xxxx	xxxxx	2.2	xxxx	xxxxx								
Capacity Module:																				
Cnflict Vol:	1139	1138	623	xxxx	1206	372	364	xxxx	xxxxx	682	xxxx	xxxxx								
Potent Cap.:	178	201	486	xxxx	184	674	1195	xxxx	xxxxx	911	xxxx	xxxxx								
Move Cap.:	160	180	478	xxxx	164	663	1185	xxxx	xxxxx	904	xxxx	xxxxx								
Volume/Cap:	1.27	0.00	0.22	xxxx	0.01	0.00	0.00	xxxx	xxxx	0.09	xxxx	xxxx								
Level Of Service Module:																				
2Way95thQ:	xxxx	xxxx	xxxxx	xxxx	xxxx	xxxxx	0.0	xxxx	xxxxx	0.3	xxxx	xxxxx								
Control Del:	xxxxx	xxxx	xxxxx	xxxxx	xxxx	xxxxx	8.0	xxxx	xxxxx	9.4	xxxx	xxxxx								
LOS by Move:	*	*	*	*	*	*	A	*	*	A	*	*								
Movement:	LT	-	LTR	-	RT	LT	-	LTR	-	RT	LT	-	LTR	-	RT	LT	-	LTR	-	RT
Shared Cap.:	xxxx	208	xxxxx	xxxx	xxxx	299	xxxx	xxxx	xxxxx	xxxx	xxxx	xxxxx								
SharedQueue:	xxxxx	18.9	xxxxx	xxxxx	xxxx	0.1	xxxxx	xxxx	xxxxx	xxxxx	xxxx	xxxxx								
Shrd ConDel:	xxxxx	287	xxxxx	xxxxx	xxxx	17.3	xxxxx	xxxx	xxxxx	xxxxx	xxxx	xxxxx								
Shared LOS:	*	F	*	*	*	C	*	*	*	*	*	*								
ApproachDel:	287.0				17.3		xxxxxx				xxxxxx									
ApproachLOS:	F				C		*				*									

Note: Queue reported is the number of cars per lane.

Scenario Report

Scenario:	Ex PM + Cum
Command:	Default Command
Volume:	Ex PM + Cum
Geometry:	Cumulative
Impact Fee:	Default Impact Fee
Trip Generation:	PM
Trip Distribution:	Project
Paths:	Default Path
Routes:	Default Route
Configuration:	Default Configuration

Impact Analysis Report
Level Of Service

Intersection	Base LOS	Base Del/ Veh	Base V/ C	Future LOS	Future Del/ Veh	Future V/ C	Change in
#201 SR76 & Vista Way	F	248.2	1.458	F	248.2	1.458	+ 0.000 D/V
#202 Mission Ave & River Rd	F	310.1	1.597	F	310.1	1.597	+ 0.000 D/V
#203 Mission Rd & Olive Hill Rd	F	206.5	1.539	F	206.5	1.539	+ 0.000 D/V
#204 SR76 & Mission Rd	F	283.8	1.865	F	283.8	1.865	+ 0.000 D/V
#205 SR76 & Gird Rd	F	241.7	1.608	F	241.7	1.608	+ 0.000 D/V
#206 SR76 & Old Hwy 395	F	240.0	1.566	F	240.0	1.566	+ 0.000 D/V
#207 SR76 & I-15 SB Ramps	F	335.5	1.973	F	335.5	1.973	+ 0.000 D/V
#208 SR76 & I-15 NB Ramps	F	240.0	1.604	F	240.0	1.604	+ 0.000 D/V
#209 SR76 & Pankey Rd	C	29.1	0.790	C	29.1	0.790	+ 0.000 D/V
#210 SR76 & Horse Ranch Creek Rd	B	18.7	0.548	B	18.7	0.548	+ 0.000 D/V
#211 SR76 & Rice Cyn Rd	F	531.2	1.463	F	531.2	1.463	+ 0.000 D/V
#212 SR76 & Couser Cyn Rd	F	297.6	1.149	F	297.6	1.149	+ 0.000 D/V
#214 SR76 & C. Drwy	A	2.3	0.605	A	2.3	0.605	+ 0.000 D/V
#216 SR76 & W. Pala Mission Rd	C	25.0	0.689	C	25.0	0.689	+ 0.000 D/V
#217 Pala Mission Rd & Pala Temecul	C	17.3	0.719	C	17.3	0.719	+ 0.000 V/C
#218 SR76 & Brittain Rd	C	19.3	0.006	C	19.3	0.006	+ 0.000 D/V
#219 SR76 & E. Pala Mission Rd	F	512.9	1.945	F	512.9	1.945	+ 0.000 D/V
#220 SR76 & Lilac Rd	F	93.0	0.635	F	93.0	0.635	+ 0.000 D/V
#221 SR76 & Adams Dr	D	32.3	0.112	D	32.3	0.112	+ 0.000 D/V
#222 SR76 & Cole Grade Rd	F	967.0	2.661	F	967.0	2.661	+ 0.000 D/V

Level Of Service Computation Report
2000 HCM Operations Method (Future Volume Alternative)

Intersection #201 SR76 & Vista Way

Cycle (sec): 180 Critical Vol./Cap.(X): 1.458
Loss Time (sec): 16 Average Delay (sec/veh): 248.2
Optimal Cycle: OPTIMIZED Level Of Service: F

Street Name:	SR76									Vista Way		
Approach:	North Bound			South Bound			East Bound			West Bound		
Movement:	L	T	R	L	T	R	L	T	R	L	T	R
Control:	Protected			Protected			Protected			Protected		
Rights:	Include			Include			Include			Include		
Min. Green:	5	5	5	5	5	5	5	5	5	5	5	5
Y+R:	4.0	4.0	4.0	4.0	4.0	4.0	4.0	4.0	4.0	4.0	4.0	4.0
Lanes:	1 0	1	1 0	2 0	0	1 0	0 0	1!	0 0	0 1	0	0 1
Volume Module:												
Base Vol:	122	2002	425	521	1475	35	11	68	83	349	82	452
Growth Adj:	1.00	1.00	1.00	1.00	1.00	1.00	1.00	1.00	1.00	1.00	1.00	1.00
Initial Bse:	122	2002	425	521	1475	35	11	68	83	349	82	452
Added Vol:	0	0	0	0	0	0	0	0	0	0	0	0
PasserByVol:	0	0	0	0	0	0	0	0	0	0	0	0
Initial Fut:	122	2002	425	521	1475	35	11	68	83	349	82	452
User Adj:	1.00	1.00	1.00	1.00	1.00	1.00	1.00	1.00	1.00	1.00	1.00	1.00
PHF Adj:	0.95	0.95	0.95	0.95	0.95	0.95	0.95	0.95	0.95	0.95	0.95	0.95
PHF Volume:	128	2107	447	548	1553	37	12	72	87	367	86	476
Reduct Vol:	0	0	0	0	0	0	0	0	0	0	0	0
Reduced Vol:	128	2107	447	548	1553	37	12	72	87	367	86	476
PCE Adj:	1.00	1.00	1.00	1.00	1.00	1.00	1.00	1.00	1.00	1.00	1.00	1.00
MLF Adj:	1.00	1.00	1.00	1.00	1.00	1.00	1.00	1.00	1.00	1.00	1.00	1.00
FinalVolume:	128	2107	447	548	1553	37	12	72	87	367	86	476
Saturation Flow Module:												
Sat/Lane:	1900	1900	1900	1900	1900	1900	1900	1900	1900	1900	1900	1900
Adjustment:	0.93	0.91	0.91	0.90	0.98	0.98	0.91	0.91	0.91	0.94	0.94	0.83
Lanes:	1.00	1.65	0.35	2.00	0.98	0.02	0.07	0.42	0.51	0.81	0.19	1.00
Final Sat.:	1769	2842	603	3432	1813	43	117	725	885	1449	340	1583
Capacity Analysis Module:												
Vol/Sat:	0.07	0.74	0.74	0.16	0.86	0.86	0.10	0.10	0.10	0.25	0.25	0.30
Crit Moves:	****				****		****					****
Green/Cycle:	0.05	0.52	0.52	0.11	0.59	0.59	0.07	0.08	0.08	0.20	0.21	0.21
Volume/Cap:	1.46	1.41	1.41	1.41	1.46	1.46	1.46	1.29	1.29	1.29	1.23	1.46
Uniform Del:	85.5	42.8	42.8	79.8	37.1	37.1	83.9	83.1	83.1	72.3	71.4	71.4
IncremntDel:	257.9	190	189.8	201.1	211	211.1	246.8	174	173.8	148.5	125	222.2
InitQueuDel:	0.0	0.0	0.0	0.0	0.0	0.0	0.0	0.0	0.0	0.0	0.0	0.0
Delay Adj:	1.00	1.00	1.00	1.00	1.00	1.00	1.00	1.00	1.00	1.00	1.00	1.00
Delay/Veh:	343.4	233	232.6	281.0	248	248.2	330.7	257	256.9	220.7	196	293.7
User DelAdj:	1.00	1.00	1.00	1.00	1.00	1.00	1.00	1.00	1.00	1.00	1.00	1.00
AdjDel/Veh:	343.4	233	232.6	281.0	248	248.2	330.7	257	256.9	220.7	196	293.7
LOS by Move:	F	F	F	F	F	F	F	F	F	F	F	F
HCM2kAvgQ:	14	120	120	27	145	145	18	16	16	39	37	45

Level Of Service Computation Report
2000 HCM Operations Method (Future Volume Alternative)

Intersection #202 Mission Ave & River Rd

Cycle (sec): 180 Critical Vol./Cap.(X): 1.597
Loss Time (sec): 16 Average Delay (sec/veh): 310.1
Optimal Cycle: OPTIMIZED Level Of Service: F

Street Name:	SR76									River Rd		
Approach:	North Bound			South Bound			East Bound			West Bound		
Movement:	L	T	R	L	T	R	L	T	R	L	T	R
Control:	Protected			Protected			Protected			Protected		
Rights:	Include			Include			Include			Include		
Min. Green:	5	5	5	5	5	5	5	5	5	5	5	5
Y+R:	4.0	4.0	4.0	4.0	4.0	4.0	4.0	4.0	4.0	4.0	4.0	4.0
Lanes:	1 0	1	0 0	0 0	0	1 0	1 0	0	1	0 0	0	0 0
Volume Module:												
Base Vol:	212	2185	0	0	1794	154	369	0	179	0	0	0
Growth Adj:	1.00	1.00	1.00	1.00	1.00	1.00	1.00	1.00	1.00	1.00	1.00	1.00
Initial Bse:	212	2185	0	0	1794	154	369	0	179	0	0	0
Added Vol:	0	0	0	0	0	0	0	0	0	0	0	0
PasserByVol:	0	0	0	0	0	0	0	0	0	0	0	0
Initial Fut:	212	2185	0	0	1794	154	369	0	179	0	0	0
User Adj:	1.00	1.00	1.00	1.00	1.00	1.00	1.00	1.00	1.00	1.00	1.00	1.00
PHF Adj:	0.95	0.95	0.95	0.95	0.95	0.95	0.95	0.95	0.95	0.95	0.95	0.95
PHF Volume:	223	2300	0	0	1888	162	388	0	188	0	0	0
Reduct Vol:	0	0	0	0	0	0	0	0	0	0	0	0
Reduced Vol:	223	2300	0	0	1888	162	388	0	188	0	0	0
PCE Adj:	1.00	1.00	1.00	1.00	1.00	1.00	1.00	1.00	1.00	1.00	1.00	1.00
MLF Adj:	1.00	1.00	1.00	1.00	1.00	1.00	1.00	1.00	1.00	1.00	1.00	1.00
FinalVolume:	223	2300	0	0	1888	162	388	0	188	0	0	0
Saturation Flow Module:												
Sat/Lane:	1900	1900	1900	1900	1900	1900	1900	1900	1900	1900	1900	1900
Adjustment:	0.93	0.98	1.00	1.00	0.97	0.97	0.93	1.00	0.83	1.00	1.00	1.00
Lanes:	1.00	1.00	0.00	0.00	0.92	0.08	1.00	0.00	1.00	0.00	0.00	0.00
Final Sat.:	1769	1862	0	0	1696	146	1769	0	1583	0	0	0
Capacity Analysis Module:												
Vol/Sat:	0.13	1.24	0.00	0.00	1.11	1.11	0.22	0.00	0.12	0.00	0.00	0.00
Crit Moves:		****		****			****					
Green/Cycle:	0.08	0.75	0.00	0.00	0.70	0.70	0.13	0.00	0.13	0.00	0.00	0.00
Volume/Cap:	1.59	1.65	0.00	0.00	1.59	1.59	1.65	0.00	0.91	0.00	0.00	0.00
Uniform Del:	82.9	22.5	0.0	0.0	27.1	27.1	78.0	0.0	77.2	0.0	0.0	0.0
IncremntDel:	298.1	294	0.0	0.0	271	270.9	309.4	0.0	38.9	0.0	0.0	0.0
InitQueuDel:	0.0	0.0	0.0	0.0	0.0	0.0	0.0	0.0	0.0	0.0	0.0	0.0
Delay Adj:	1.00	1.00	0.00	0.00	1.00	1.00	1.00	0.00	1.00	0.00	0.00	0.00
Delay/Veh:	381.0	317	0.0	0.0	298	298.0	387.4	0.0	116.1	0.0	0.0	0.0
User DelAdj:	1.00	1.00	1.00	1.00	1.00	1.00	1.00	1.00	1.00	1.00	1.00	1.00
AdjDel/Veh:	381.0	317	0.0	0.0	298	298.0	387.4	0.0	116.1	0.0	0.0	0.0
LOS by Move:	F	F	A	A	F	F	F	A	F	A	A	A
HCM2kAvgQ:	24	230	0	0	201	201	41	0	13	0	0	0

Level Of Service Computation Report
2000 HCM Operations Method (Future Volume Alternative)

Intersection #203 Mission Rd & Olive Hill Rd

Cycle (sec): 180 Critical Vol./Cap.(X): 1.539
Loss Time (sec): 16 Average Delay (sec/veh): 206.5
Optimal Cycle: OPTIMIZED Level Of Service: F

Street Name:	SR76						Olive Hill Rd					
Approach:	North Bound			South Bound			East Bound			West Bound		
Movement:	L - T - R			L - T - R			L - T - R			L - T - R		
Control:	Protected			Protected			Protected			Protected		
Rights:	Include			Include			Include			Include		
Min. Green:	5	5	5	5	5	5	5	5	5	5	5	5
Y+R:	4.0	4.0	4.0	4.0	4.0	4.0	4.0	4.0	4.0	4.0	4.0	4.0
Lanes:	1	0	1	1	0	1	0	2	0	1	1	0
Volume Module:												
Base Vol:	171	2716	205	296	1801	124	258	196	113	76	192	293
Growth Adj:	1.00	1.00	1.00	1.00	1.00	1.00	1.00	1.00	1.00	1.00	1.00	1.00
Initial Bse:	171	2716	205	296	1801	124	258	196	113	76	192	293
Added Vol:	0	0	0	0	0	0	0	0	0	0	0	0
PasserByVol:	0	0	0	0	0	0	0	0	0	0	0	0
Initial Fut:	171	2716	205	296	1801	124	258	196	113	76	192	293
User Adj:	1.00	1.00	1.00	1.00	1.00	1.00	1.00	1.00	1.00	1.00	1.00	1.00
PHF Adj:	0.95	0.95	0.95	0.95	0.95	0.95	0.95	0.95	0.95	0.95	0.95	0.95
PHF Volume:	180	2859	216	312	1896	131	272	206	119	80	202	308
Reduct Vol:	0	0	0	0	0	0	0	0	0	0	0	0
Reduced Vol:	180	2859	216	312	1896	131	272	206	119	80	202	308
PCE Adj:	1.00	1.00	1.00	1.00	1.00	1.00	1.00	1.00	1.00	1.00	1.00	1.00
MLF Adj:	1.00	1.00	1.00	1.00	1.00	1.00	1.00	1.00	1.00	1.00	1.00	1.00
FinalVolume:	180	2859	216	312	1896	131	272	206	119	80	202	308
Saturation Flow Module:												
Sat/Lane:	1900	1900	1900	1900	1900	1900	1900	1900	1900	1900	1900	1900
Adjustment:	0.93	0.92	0.92	0.93	0.93	0.83	0.93	0.98	0.83	0.97	0.97	0.83
Lanes:	1.00	1.86	0.14	1.00	2.00	1.00	1.00	1.00	1.00	0.28	0.72	1.00
Final Sat.:	1769	3257	246	1769	3538	1583	1769	1862	1583	521	1315	1583
Capacity Analysis Module:												
Vol/Sat:	0.10	0.88	0.88	0.18	0.54	0.08	0.15	0.11	0.08	0.15	0.15	0.19
Crit Moves:		****		****			****					****
Green/Cycle:	0.11	0.57	0.57	0.11	0.58	0.58	0.10	0.09	0.09	0.13	0.13	0.13
Volume/Cap:	0.93	1.54	1.54	1.54	0.93	0.14	1.54	1.17	0.79	1.17	1.21	1.54
Uniform Del:	79.5	38.7	38.7	79.7	34.9	17.7	81.0	81.5	79.7	78.2	78.6	78.6
IncremntDel:	45.4	245	245.2	265.8	8.4	0.1	268.9	120	24.3	111.1	129	266.1
InitQueuDel:	0.0	0.0	0.0	0.0	0.0	0.0	0.0	0.0	0.0	0.0	0.0	0.0
Delay Adj:	1.00	1.00	1.00	1.00	1.00	1.00	1.00	1.00	1.00	1.00	1.00	1.00
Delay/Veh:	124.9	284	283.9	345.5	43.3	17.7	350.0	202	104.1	189.2	208	344.7
User DelAdj:	1.00	1.00	1.00	1.00	1.00	1.00	1.00	1.00	1.00	1.00	1.00	1.00
AdjDel/Veh:	124.9	284	283.9	345.5	43.3	17.7	350.0	202	104.1	189.2	208	344.7
LOS by Move:	F	F	F	F	D	B	F	F	F	F	F	F
HCM2kAvgQ:	13	155	155	32	53	3	28	18	8	23	24	31

Level Of Service Computation Report
2000 HCM Operations Method (Future Volume Alternative)

Intersection #204 SR76 & Mission Rd

Cycle (sec): 180 Critical Vol./Cap.(X): 1.865
Loss Time (sec): 12 Average Delay (sec/veh): 283.8
Optimal Cycle: OPTIMIZED Level Of Service: F

Street Name:	Mission Rd						SR76					
Approach:	North Bound			South Bound			East Bound			West Bound		
Movement:	L - T - R			L - T - R			L - T - R			L - T - R		
Control:	Split Phase			Split Phase			Protected			Protected		
Rights:	Include			Include			Include			Include		
Min. Green:	5	5	5	5	5	5	5	5	5	5	5	5
Y+R:	4.0	4.0	4.0	4.0	4.0	4.0	4.0	4.0	4.0	4.0	4.0	4.0
Lanes:	0	0	0	0	0	2	0	0	0	2	2	0
Volume Module: >> Count Date: 25 Oct 2006 <<												
Base Vol:	0	0	0	300	0	869	1160	2499	0	0	1698	223
Growth Adj:	1.00	1.00	1.00	1.00	1.00	1.00	1.00	1.00	1.00	1.00	1.00	1.00
Initial Bse:	0	0	0	300	0	869	1160	2499	0	0	1698	223
Added Vol:	0	0	0	0	0	0	0	0	0	0	0	0
PasserByVol:	0	0	0	0	0	0	0	0	0	0	0	0
Initial Fut:	0	0	0	300	0	869	1160	2499	0	0	1698	223
User Adj:	1.00	1.00	1.00	1.00	1.00	1.00	1.00	1.00	1.00	1.00	1.00	1.00
PHF Adj:	0.95	0.95	0.95	0.95	0.95	0.95	0.95	0.95	0.95	0.95	0.95	0.95
PHF Volume:	0	0	0	316	0	915	1221	2631	0	0	1787	235
Reduct Vol:	0	0	0	0	0	0	0	0	0	0	0	0
Reduced Vol:	0	0	0	316	0	915	1221	2631	0	0	1787	235
PCE Adj:	1.00	1.00	1.00	1.00	1.00	1.00	1.00	1.00	1.00	1.00	1.00	1.00
MLF Adj:	1.00	1.00	1.00	1.00	1.00	1.00	1.00	1.00	1.00	1.00	1.00	1.00
FinalVolume:	0	0	0	316	0	915	1221	2631	0	0	1787	235
Saturation Flow Module:												
Sat/Lane:	1900	1900	1900	1900	1900	1900	1900	1900	1900	1900	1900	1900
Adjustment:	1.00	1.00	1.00	0.90	1.00	0.73	0.90	0.98	1.00	1.00	0.93	0.83
Lanes:	0.00	0.00	0.00	2.00	0.00	2.00	2.00	1.00	0.00	0.00	2.00	1.00
Final Sat.:	0	0	0	3432	0	2786	3432	1862	0	0	3538	1583
Capacity Analysis Module:												
Vol/Sat:	0.00	0.00	0.00	0.09	0.00	0.33	0.36	1.41	0.00	0.00	0.51	0.15
Crit Moves:						****		****		****		
Green/Cycle:	0.00	0.00	0.00	0.17	0.00	0.17	0.32	0.73	0.00	0.00	0.45	0.45
Volume/Cap:	0.00	0.00	0.00	0.54	0.00	1.92	1.13	1.92	0.00	0.00	1.13	0.33
Uniform Del:	0.0	0.0	0.0	68.2	0.0	74.6	61.6	23.9	0.0	0.0	49.7	32.3
IncremntDel:	0.0	0.0	0.0	1.0	0.0	423.0	70.2	418	0.0	0.0	66.8	0.3
InitQueuDel:	0.0	0.0	0.0	0.0	0.0	0.0	0.0	0.0	0.0	0.0	0.0	0.0
Delay Adj:	0.00	0.00	0.00	1.00	0.00	1.00	1.00	1.00	0.00	0.00	1.00	1.00
Delay/Veh:	0.0	0.0	0.0	69.2	0.0	497.6	131.8	442	0.0	0.0	117	32.5
User DelAdj:	1.00	1.00	1.00	1.00	1.00	1.00	1.00	1.00	1.00	1.00	1.00	1.00
AdjDel/Veh:	0.0	0.0	0.0	69.2	0.0	497.6	131.8	442	0.0	0.0	117	32.5
LOS by Move:	A	A	A	E	A	F	F	F	A	A	F	C
HCM2kAvgQ:	0	0	0	9	0	59	46	291	0	0	67	8

Level Of Service Computation Report
2000 HCM Operations Method (Future Volume Alternative)

Intersection #205 SR76 & Gird Rd

Cycle (sec): 180 Critical Vol./Cap.(X): 1.608
Loss Time (sec): 12 Average Delay (sec/veh): 241.7
Optimal Cycle: OPTIMIZED Level Of Service: F

Street Name:	Gird Rd						SR76					
Approach:	North Bound			South Bound			East Bound			West Bound		
Movement:	L	T	R	L	T	R	L	T	R	L	T	R
Control:	Split Phase			Split Phase			Protected			Protected		
Rights:	Include			Include			Include			Include		
Min. Green:	5	5	5	5	5	5	5	5	5	5	5	5
Y+R:	4.0	4.0	4.0	4.0	4.0	4.0	4.0	4.0	4.0	4.0	4.0	4.0
Lanes:	0	0	0	0	0	1	0	0	0	1	0	1
Volume Module: >> Count Date: 18 Oct 2006 << PM Peak												
Base Vol:	0	0	0	69	0	108	212	2527	0	0	1790	111
Growth Adj:	1.00	1.00	1.00	1.00	1.00	1.00	1.00	1.00	1.00	1.00	1.00	1.00
Initial Bse:	0	0	0	69	0	108	212	2527	0	0	1790	111
Added Vol:	0	0	0	0	0	0	0	0	0	0	0	0
PasserByVol:	0	0	0	0	0	0	0	0	0	0	0	0
Initial Fut:	0	0	0	69	0	108	212	2527	0	0	1790	111
User Adj:	1.00	1.00	1.00	1.00	1.00	1.00	1.00	1.00	1.00	1.00	1.00	1.00
PHF Adj:	0.95	0.95	0.95	0.95	0.95	0.95	0.95	0.95	0.95	0.95	0.95	0.95
PHF Volume:	0	0	0	73	0	114	223	2660	0	0	1884	117
Reduct Vol:	0	0	0	0	0	0	0	0	0	0	0	0
Reduced Vol:	0	0	0	73	0	114	223	2660	0	0	1884	117
PCE Adj:	1.00	1.00	1.00	1.00	1.00	1.00	1.00	1.00	1.00	1.00	1.00	1.00
MLF Adj:	1.00	1.00	1.00	1.00	1.00	1.00	1.00	1.00	1.00	1.00	1.00	1.00
FinalVolume:	0	0	0	73	0	114	223	2660	0	0	1884	117
Saturation Flow Module:												
Sat/Lane:	1900	1900	1900	1900	1900	1900	1900	1900	1900	1900	1900	1900
Adjustment:	1.00	1.00	1.00	0.93	1.00	0.83	0.93	0.98	1.00	1.00	0.98	0.83
Lanes:	0.00	0.00	0.00	1.00	0.00	1.00	1.00	1.00	0.00	0.00	1.00	1.00
Final Sat.:	0	0	0	1769	0	1583	1769	1862	0	0	1862	1583
Capacity Analysis Module:												
Vol/Sat:	0.00	0.00	0.00	0.04	0.00	0.07	0.13	1.43	0.00	0.00	1.01	0.07
Crit Moves:						****		****		****		
Green/Cycle:	0.00	0.00	0.00	0.04	0.00	0.04	0.10	0.86	0.00	0.00	0.79	0.79
Volume/Cap:	0.00	0.00	0.00	0.95	0.00	1.66	1.28	1.66	0.00	0.00	1.28	0.09
Uniform Del:	0.0	0.0	0.0	85.9	0.0	86.1	81.1	12.4	0.0	0.0	18.8	4.2
IncremntDel:	0.0	0.0	0.0	84.5	0.0	351.3	162.1	298	0.0	0.0	131	0.0
InitQueuDel:	0.0	0.0	0.0	0.0	0.0	0.0	0.0	0.0	0.0	0.0	0.0	0.0
Delay Adj:	0.00	0.00	0.00	1.00	0.00	1.00	1.00	1.00	0.00	0.00	1.00	1.00
Delay/Veh:	0.0	0.0	0.0	170.4	0.0	437.4	243.2	311	0.0	0.0	150	4.3
User DelAdj:	1.00	1.00	1.00	1.00	1.00	1.00	1.00	1.00	1.00	1.00	1.00	1.00
AdjDel/Veh:	0.0	0.0	0.0	170.4	0.0	437.4	243.2	311	0.0	0.0	150	4.3
LOS by Move:	A	A	A	F	A	F	F	F	A	A	F	A
HCM2kAvgQ:	0	0	0	6	0	13	20	267	0	0	150	1

Level Of Service Computation Report
2000 HCM Operations Method (Future Volume Alternative)

Intersection #206 SR76 & Old Hwy 395

Cycle (sec): 175 Critical Vol./Cap.(X): 1.566
Loss Time (sec): 16 Average Delay (sec/veh): 240.0
Optimal Cycle: OPTIMIZED Level Of Service: F

Street Name:	Old Hwy 395						SR76					
Approach:	North Bound			South Bound			East Bound			West Bound		
Movement:	L	T	R	L	T	R	L	T	R	L	T	R
Control:	Split Phase			Split Phase			Protected			Protected		
Rights:	Include			Include			Include			Include		
Min. Green:	5	5	5	5	5	5	5	5	5	5	5	5
Y+R:	4.0	4.0	4.0	4.0	4.0	4.0	4.0	4.0	4.0	4.0	4.0	4.0
Lanes:	1	0	0	1	0	0	0	1!	0	0	1	0
Volume Module: >> Count Date: 25 Oct 2006 << PM Peak												
Base Vol:	211	266	114	550	194	136	160	1709	177	176	1214	564
Growth Adj:	1.00	1.00	1.00	1.00	1.00	1.00	1.00	1.00	1.00	1.00	1.00	1.00
Initial Bse:	211	266	114	550	194	136	160	1709	177	176	1214	564
Added Vol:	0	0	0	0	0	0	0	0	0	0	0	0
PasserByVol:	0	0	0	0	0	0	0	0	0	0	0	0
Initial Fut:	211	266	114	550	194	136	160	1709	177	176	1214	564
User Adj:	1.00	1.00	1.00	1.00	1.00	1.00	1.00	1.00	1.00	1.00	1.00	1.00
PHF Adj:	0.95	0.95	0.95	0.95	0.95	0.95	0.95	0.95	0.95	0.95	0.95	0.95
PHF Volume:	222	280	120	579	204	143	168	1799	186	185	1278	594
Reduct Vol:	0	0	0	0	0	0	0	0	0	0	0	0
Reduced Vol:	222	280	120	579	204	143	168	1799	186	185	1278	594
PCE Adj:	1.00	1.00	1.00	1.00	1.00	1.00	1.00	1.00	1.00	1.00	1.00	1.00
MLF Adj:	1.00	1.00	1.00	1.00	1.00	1.00	1.00	1.00	1.00	1.00	1.00	1.00
FinalVolume:	222	280	120	579	204	143	168	1799	186	185	1278	594
Saturation Flow Module:												
Sat/Lane:	1900	1900	1900	1900	1900	1900	1900	1900	1900	1900	1900	1900
Adjustment:	0.93	0.94	0.94	0.93	0.93	0.93	0.93	0.92	0.92	0.93	0.93	0.83
Lanes:	1.00	0.70	0.30	0.63	0.22	0.15	1.00	1.81	0.19	1.00	2.00	1.00
Final Sat.:	1769	1245	533	1105	390	273	1769	3161	327	1769	3538	1568
Capacity Analysis Module:												
Vol/Sat:	0.13	0.22	0.22	0.52	0.52	0.52	0.10	0.57	0.57	0.10	0.36	0.38
Crit Moves:			****			****		****		****		
Green/Cycle:	0.14	0.14	0.14	0.33	0.33	0.33	0.09	0.36	0.36	0.07	0.34	0.34
Volume/Cap:	0.87	1.57	1.57	1.57	1.57	1.57	1.10	1.57	1.57	1.57	1.05	1.10
Uniform Del:	73.4	74.9	74.9	58.2	58.2	58.2	79.9	55.7	55.7	81.6	57.4	57.4
IncremntDel:	26.7	273	272.8	262.8	263	262.8	102.5	258	258.5	291.4	40.1	69.4
InitQueuDel:	0.0	0.0	0.0	0.0	0.0	0.0	0.0	0.0	0.0	0.0	0.0	0.0
Delay Adj:	1.00	1.00	1.00	1.00	1.00	1.00	1.00	1.00	1.00	1.00	1.00	1.00
Delay/Veh:	100.1	348	347.8	321.0	321	321.0	182.4	314	314.2	373.1	97.5	126.8
User DelAdj:	1.00	1.00	1.00	1.00	1.00	1.00	1.00	1.00	1.00	1.00	1.00	1.00
AdjDel/Veh:	100.1	348	347.8	321.0	321	321.0	182.4	314	314.2	373.1	97.5	126.8
LOS by Move:	F	F	F	F	F	F	F	F	F	F	F	F
HCM2kAvgQ:	14	40	40	89	89	89	14	101	101	17	38	37

Level Of Service Computation Report
2000 HCM Operations Method (Future Volume Alternative)

Intersection #207 SR76 & I-15 SB Ramps

Cycle (sec): 180 Critical Vol./Cap.(X): 1.973
Loss Time (sec): 12 Average Delay (sec/veh): 335.5
Optimal Cycle: OPTIMIZED Level Of Service: F

Street Name:	I-15 SB Ramps						SR76					
Approach:	North Bound			South Bound			East Bound			West Bound		
Movement:	L	T	R	L	T	R	L	T	R	L	T	R
Control:	Split Phase			Split Phase			Protected			Protected		
Rights:		Include			Include			Include			Include	
Min. Green:	5	5	5	5	5	5	5	5	5	5	5	5
Y+R:	4.0	4.0	4.0	4.0	4.0	4.0	4.0	4.0	4.0	4.0	4.0	4.0
Lanes:	0	0	0	0	0	0	0	1	0	0	1	0
Volume Module: >> Count Date: 25 Oct 2006 << PM Peak												
Base Vol:	0	0	0	322	13	855	0	1808	357	421	1074	0
Growth Adj:	1.00	1.00	1.00	1.00	1.00	1.00	1.00	1.00	1.00	1.00	1.00	1.00
Initial Bse:	0	0	0	322	13	855	0	1808	357	421	1074	0
Added Vol:	0	0	0	0	0	0	0	0	0	0	0	0
PasserByVol:	0	0	0	0	0	0	0	0	0	0	0	0
Initial Fut:	0	0	0	322	13	855	0	1808	357	421	1074	0
User Adj:	1.00	1.00	1.00	1.00	1.00	1.00	1.00	1.00	1.00	1.00	1.00	1.00
PHF Adj:	0.95	0.95	0.95	0.95	0.95	0.95	0.95	0.95	0.95	0.95	0.95	0.95
PHF Volume:	0	0	0	339	14	900	0	1903	376	443	1131	0
Reduct Vol:	0	0	0	0	0	0	0	0	0	0	0	0
Reduced Vol:	0	0	0	339	14	900	0	1903	376	443	1131	0
PCE Adj:	1.00	1.00	1.00	1.00	1.00	1.00	1.00	1.00	1.00	1.00	1.00	1.00
MLF Adj:	1.00	1.00	1.00	1.00	1.00	1.00	1.00	1.00	1.00	1.00	1.00	1.00
FinalVolume:	0	0	0	339	14	900	0	1903	376	443	1131	0
Saturation Flow Module:												
Sat/Lane:	1900	1900	1900	1900	1900	1900	1900	1900	1900	1900	1900	1900
Adjustment:	1.00	1.00	1.00	0.94	0.94	0.83	1.00	0.98	0.83	0.93	0.98	1.00
Lanes:	0.00	0.00	0.00	0.96	0.04	1.00	0.00	1.00	1.00	1.00	1.00	0.00
Final Sat.:	0	0	0	1716	69	1583	0	1862	1583	1769	1862	0
Capacity Analysis Module:												
Vol/Sat:	0.00	0.00	0.00	0.20	0.20	0.57	0.00	1.02	0.24	0.25	0.61	0.00
Crit Moves:						****		****		****		
Green/Cycle:	0.00	0.00	0.00	0.29	0.29	0.29	0.00	0.52	0.52	0.13	0.62	0.00
Volume/Cap:	0.00	0.00	0.00	0.69	0.69	1.97	0.00	1.97	0.46	1.97	0.98	0.00
Uniform Del:	0.0	0.0	0.0	56.8	56.8	64.1	0.0	43.4	27.4	78.6	33.6	0.0
IncremntDel:	0.0	0.0	0.0	3.8	3.8	445.6	0.0	442	0.4	453.4	22.7	0.0
InitQueuDel:	0.0	0.0	0.0	0.0	0.0	0.0	0.0	0.0	0.0	0.0	0.0	0.0
Delay Adj:	0.00	0.00	0.00	1.00	1.00	1.00	0.00	1.00	1.00	1.00	1.00	0.00
Delay/Veh:	0.0	0.0	0.0	60.6	60.6	509.7	0.0	485	27.8	532.0	56.3	0.0
User DelAdj:	1.00	1.00	1.00	1.00	1.00	1.00	1.00	1.00	1.00	1.00	1.00	1.00
AdjDel/Veh:	0.0	0.0	0.0	60.6	60.6	509.7	0.0	485	27.8	532.0	56.3	0.0
LOS by Move:	A	A	A	E	E	F	A	F	C	F	E	A
HCM2kAvgQ:	0	0	0	18	18	102	0	213	12	50	58	0

Level Of Service Computation Report
2000 HCM Operations Method (Future Volume Alternative)

Intersection #208 SR76 & I-15 NB Ramps

Cycle (sec): 160 Critical Vol./Cap.(X): 1.604
Loss Time (sec): 12 Average Delay (sec/veh): 240.0
Optimal Cycle: OPTIMIZED Level Of Service: F

Street Name:	I-15 NB Ramps						SR76					
Approach:	North Bound			South Bound			East Bound			West Bound		
Movement:	L	T	R	L	T	R	L	T	R	L	T	R
Control:	Split Phase			Split Phase			Protected			Protected		
Rights:		Include			Include			Include			Include	
Min. Green:	5	5	5	5	5	5	5	5	5	5	5	5
Y+R:	4.0	4.0	4.0	4.0	4.0	4.0	4.0	4.0	4.0	4.0	4.0	4.0
Lanes:	0	1	0	0	1	0	0	0	0	1	0	1
Volume Module:PM Peak												
Base Vol:	433	12	517	0	0	0	1230	711	0	0	722	295
Growth Adj:	1.00	1.00	1.00	1.00	1.00	1.00	1.00	1.00	1.00	1.00	1.00	1.00
Initial Bse:	433	12	517	0	0	0	1230	711	0	0	722	295
Added Vol:	0	0	0	0	0	0	0	0	0	0	0	0
PasserByVol:	0	0	0	0	0	0	0	0	0	0	0	0
Initial Fut:	433	12	517	0	0	0	1230	711	0	0	722	295
User Adj:	1.00	1.00	1.00	1.00	1.00	1.00	1.00	1.00	1.00	1.00	1.00	1.00
PHF Adj:	0.95	0.95	0.95	0.95	0.95	0.95	0.95	0.95	0.95	0.95	0.95	0.95
PHF Volume:	456	13	544	0	0	0	1295	748	0	0	760	311
Reduct Vol:	0	0	0	0	0	0	0	0	0	0	0	0
Reduced Vol:	456	13	544	0	0	0	1295	748	0	0	760	311
PCE Adj:	1.00	1.00	1.00	1.00	1.00	1.00	1.00	1.00	1.00	1.00	1.00	1.00
MLF Adj:	1.00	1.00	1.00	1.00	1.00	1.00	1.00	1.00	1.00	1.00	1.00	1.00
FinalVolume:	456	13	544	0	0	0	1295	748	0	0	760	311
Saturation Flow Module:												
Sat/Lane:	1900	1900	1900	1900	1900	1900	1900	1900	1900	1900	1900	1900
Adjustment:	0.91	0.91	0.83	1.00	1.00	1.00	0.93	0.98	1.00	1.00	0.98	0.83
Lanes:	0.97	0.03	1.00	0.00	0.00	0.00	1.00	1.00	0.00	0.00	1.00	1.00
Final Sat.:	1690	47	1583	0	0	0	1769	1862	0	0	1862	1583
Capacity Analysis Module:												
Vol/Sat:	0.27	0.27	0.34	0.00	0.00	0.00	0.73	0.40	0.00	0.00	0.41	0.20
Crit Moves:			****				****				****	
Green/Cycle:	0.21	0.21	0.21	0.00	0.00	0.00	0.46	0.66	0.00	0.00	0.25	0.25
Volume/Cap:	1.26	1.26	1.60	0.00	0.00	0.00	1.60	0.61	0.00	0.00	1.60	0.77
Uniform Del:	62.9	62.9	62.9	0.0	0.0	0.0	43.5	15.5	0.0	0.0	59.6	55.3
IncremntDel:	136.2	136	285.3	0.0	0.0	0.0	277.7	0.9	0.0	0.0	282	8.9
InitQueuDel:	0.0	0.0	0.0	0.0	0.0	0.0	0.0	0.0	0.0	0.0	0.0	0.0
Delay Adj:	1.00	1.00	1.00	0.00	0.00	0.00	1.00	1.00	0.00	0.00	1.00	1.00
Delay/Veh:	199.1	199	348.2	0.0	0.0	0.0	321.2	16.4	0.0	0.0	341	64.2
User DelAdj:	1.00	1.00	1.00	1.00	1.00	1.00	1.00	1.00	1.00	1.00	1.00	1.00
AdjDel/Veh:	199.1	199	348.2	0.0	0.0	0.0	321.2	16.4	0.0	0.0	341	64.2
LOS by Move:	F	F	F	A	A	A	F	B	A	A	F	E
HCM2kAvgQ:	37	37	52	0	0	0	119	19	0	0	72	16

Level Of Service Computation Report
2000 HCM Operations Method (Future Volume Alternative)

Intersection #209 SR76 & Pankey Rd

Cycle (sec): 90 Critical Vol./Cap.(X): 0.790
Loss Time (sec): 0 Average Delay (sec/veh): 29.1
Optimal Cycle: OPTIMIZED Level Of Service: C

Street Name:	Pankey Rd						SR76					
Approach:	North Bound			South Bound			East Bound			West Bound		
Movement:	L -	T -	R	L -	T -	R	L -	T -	R	L -	T -	R
Control:	Protected			Protected			Protected			Protected		
Rights:	Include			Include			Include			Include		
Min. Green:	5	5	5	5	5	5	5	5	5	5	5	5
Y+R:	4.0	4.0	4.0	4.0	4.0	4.0	4.0	4.0	4.0	4.0	4.0	4.0
Lanes:	1 0	2 0	1	1 0	1 1	0	1 0	2 0	1	1 0	1 1	0
Volume Module: >> Count Date: 25 Oct 2006 <<												
Base Vol:	311	382	117	98	447	202	145	1074	333	78	979	73
Growth Adj:	1.00	1.00	1.00	1.00	1.00	1.00	1.00	1.00	1.00	1.00	1.00	1.00
Initial Bse:	311	382	117	98	447	202	145	1074	333	78	979	73
Added Vol:	0	0	0	0	0	0	0	0	0	0	0	0
PasserByVol:	0	0	0	0	0	0	0	0	0	0	0	0
Initial Fut:	311	382	117	98	447	202	145	1074	333	78	979	73
User Adj:	1.00	1.00	1.00	1.00	1.00	1.00	1.00	1.00	1.00	1.00	1.00	1.00
PHF Adj:	0.95	0.95	0.95	0.95	0.95	0.95	0.95	0.95	0.95	0.95	0.95	0.95
PHF Volume:	327	402	123	103	471	213	153	1131	351	82	1031	77
Reduct Vol:	0	0	0	0	0	0	0	0	0	0	0	0
Reduced Vol:	327	402	123	103	471	213	153	1131	351	82	1031	77
PCE Adj:	1.00	1.00	1.00	1.00	1.00	1.00	1.00	1.00	1.00	1.00	1.00	1.00
MLF Adj:	1.00	1.00	1.00	1.00	1.00	1.00	1.00	1.00	1.00	1.00	1.00	1.00
FinalVolume:	327	402	123	103	471	213	153	1131	351	82	1031	77
Saturation Flow Module:												
Sat/Lane:	1900	1900	1900	1900	1900	1900	1900	1900	1900	1900	1900	1900
Adjustment:	0.93	0.93	0.83	0.93	0.89	0.89	0.93	0.93	0.83	0.93	0.92	0.92
Lanes:	1.00	2.00	1.00	1.00	1.38	0.62	1.00	2.00	1.00	1.00	1.86	0.14
Final Sat.:	1769	3538	1583	1769	2322	1049	1769	3538	1583	1769	3259	243
Capacity Analysis Module:												
Vol/Sat:	0.19	0.11	0.08	0.06	0.20	0.20	0.09	0.32	0.22	0.05	0.32	0.32
Crit Moves:	****				****		****				****	
Green/Cycle:	0.23	0.32	0.32	0.17	0.26	0.26	0.11	0.43	0.43	0.08	0.40	0.40
Volume/Cap:	0.79	0.35	0.24	0.35	0.79	0.79	0.79	0.74	0.51	0.62	0.79	0.79
Uniform Del:	32.4	23.2	22.3	33.2	31.2	31.2	39.1	21.2	18.5	40.3	23.7	23.7
IncremntDel:	9.9	0.2	0.2	0.7	5.0	5.0	19.4	1.9	0.6	8.3	3.1	3.1
InitQueuDel:	0.0	0.0	0.0	0.0	0.0	0.0	0.0	0.0	0.0	0.0	0.0	0.0
Delay Adj:	1.00	1.00	1.00	1.00	1.00	1.00	1.00	1.00	1.00	1.00	1.00	1.00
Delay/Veh:	42.2	23.4	22.5	33.9	36.2	36.2	58.5	23.1	19.2	48.7	26.8	26.8
User DelAdj:	1.00	1.00	1.00	1.00	1.00	1.00	1.00	1.00	1.00	1.00	1.00	1.00
AdjDel/Veh:	42.2	23.4	22.5	33.9	36.2	36.2	58.5	23.1	19.2	48.7	26.8	26.8
LOS by Move:	D	C	C	C	D	D	E	C	B	D	C	C
HCM2kAvgQ:	11	5	3	3	11	11	6	15	7	3	16	16

Level Of Service Computation Report
2000 HCM Operations Method (Future Volume Alternative)

Intersection #210 SR76 & Horse Ranch Creek Rd

Cycle (sec): 90 Critical Vol./Cap.(X): 0.548
Loss Time (sec): 0 Average Delay (sec/veh): 18.7
Optimal Cycle: OPTIMIZED Level Of Service: B

Street Name:	Horse Ranch Creek Rd						SR76					
Approach:	North Bound			South Bound			East Bound			West Bound		
Movement:	L -	T -	R	L -	T -	R	L -	T -	R	L -	T -	R
Control:	Protected			Protected			Protected			Protected		
Rights:	Include			Include			Include			Include		
Min. Green:	5	5	5	5	5	5	5	5	5	5	5	5
Y+R:	4.0	4.0	4.0	4.0	4.0	4.0	4.0	4.0	4.0	4.0	4.0	4.0
Lanes:	0 0	1! 0	0	1 0	1! 0	1	1 0	1 1	0	1 0	2 0	1
Volume Module:												
Base Vol:	0	0	0	132	0	307	346	825	0	0	759	117
Growth Adj:	1.00	1.00	1.00	1.00	1.00	1.00	1.00	1.00	1.00	1.00	1.00	1.00
Initial Bse:	0	0	0	132	0	307	346	825	0	0	759	117
Added Vol:	0	0	0	0	0	0	0	0	0	0	0	0
PasserByVol:	0	0	0	0	0	0	0	0	0	0	0	0
Initial Fut:	0	0	0	132	0	307	346	825	0	0	759	117
User Adj:	1.00	1.00	1.00	1.00	1.00	1.00	1.00	1.00	1.00	1.00	1.00	1.00
PHF Adj:	0.95	0.95	0.95	0.95	0.95	0.95	0.95	0.95	0.95	0.95	0.95	0.95
PHF Volume:	0	0	0	139	0	323	364	868	0	0	799	123
Reduct Vol:	0	0	0	0	0	0	0	0	0	0	0	0
Reduced Vol:	0	0	0	139	0	323	364	868	0	0	799	123
PCE Adj:	1.00	1.00	1.00	1.00	1.00	1.00	1.00	1.00	1.00	1.00	1.00	1.00
MLF Adj:	1.00	1.00	1.00	1.00	1.00	1.00	1.00	1.00	1.00	1.00	1.00	1.00
FinalVolume:	0	0	0	139	0	323	364	868	0	0	799	123
Saturation Flow Module:												
Sat/Lane:	1900	1900	1900	1900	1900	1900	1900	1900	1900	1900	1900	1900
Adjustment:	1.00	1.00	1.00	0.86	1.00	0.86	0.93	0.93	0.95	1.00	0.93	0.83
Lanes:	0.00	1.00	0.00	1.30	0.00	1.70	1.00	2.00	0.00	1.00	2.00	1.00
Final Sat.:	0	1900	0	2135	0	2789	1769	3538	0	1900	3538	1583
Capacity Analysis Module:												
Vol/Sat:	0.00	0.00	0.00	0.07	0.00	0.12	0.21	0.25	0.00	0.00	0.23	0.08
Crit Moves:						****	****				****	
Green/Cycle:	0.00	0.00	0.00	0.14	0.00	0.21	0.38	0.64	0.00	0.00	0.41	0.41
Volume/Cap:	0.00	0.00	0.00	0.45	0.00	0.55	0.55	0.38	0.00	0.00	0.55	0.19
Uniform Del:	0.0	0.0	0.0	35.3	0.0	31.6	22.1	7.6	0.0	0.0	20.1	16.8
IncremntDel:	0.0	0.0	0.0	0.3	0.0	0.8	1.0	0.1	0.0	0.0	0.4	0.1
InitQueuDel:	0.0	0.0	0.0	0.0	0.0	0.0	0.0	0.0	0.0	0.0	0.0	0.0
Delay Adj:	0.00	0.00	0.00	1.00	0.00	1.00	1.00	1.00	0.00	0.00	1.00	1.00
Delay/Veh:	0.0	0.0	0.0	35.6	0.0	32.4	23.0	7.7	0.0	0.0	20.5	17.0
User DelAdj:	1.00	1.00	1.00	1.00	1.00	1.00	1.00	1.00	1.00	1.00	1.00	1.00
AdjDel/Veh:	0.0	0.0	0.0	35.6	0.0	32.4	23.0	7.7	0.0	0.0	20.5	17.0
LOS by Move:	A	A	A	D	A	C	C	A	A	A	C	B
HCM2kAvgQ:	0	0	0	3	0	5	8	6	0	0	9	2

Level Of Service Computation Report
2000 HCM Unsignalized Method (Future Volume Alternative)

Intersection #211 SR76 & Rice Cyn Rd

Average Delay (sec/veh): 26.9 Worst Case Level Of Service: F[531.2]

Street Name:	Rice Cyn Rd						SR76					
Approach:	North Bound			South Bound			East Bound			West Bound		
Movement:	L - T - R			L - T - R			L - T - R			L - T - R		
Control:	Stop Sign			Stop Sign			Uncontrolled			Uncontrolled		
Rights:	Include			Include			Include			Include		
Lanes:	0 0 0 0 0			0 0 1! 0 0			0 1 0 0 0			0 0 0 1 0		
Volume Module: >> Count Date: 19 Oct 2006 <<												
Base Vol:	0	0	0	40	0	75	110	909	0	0	1112	84
Growth Adj:	1.00	1.00	1.00	1.00	1.00	1.00	1.00	1.00	1.00	1.00	1.00	1.00
Initial Bse:	0	0	0	40	0	75	110	909	0	0	1112	84
Added Vol:	0	0	0	0	0	0	0	0	0	0	0	0
PasserByVol:	0	0	0	0	0	0	0	0	0	0	0	0
Initial Fut:	0	0	0	40	0	75	110	909	0	0	1112	84
User Adj:	1.00	1.00	1.00	1.00	1.00	1.00	1.00	1.00	1.00	1.00	1.00	1.00
PHF Adj:	0.95	0.95	0.95	0.95	0.95	0.95	0.95	0.95	0.95	0.95	0.95	0.95
PHF Volume:	0	0	0	42	0	79	116	957	0	0	1171	88
Reduct Vol:	0	0	0	0	0	0	0	0	0	0	0	0
FinalVolume:	0	0	0	42	0	79	116	957	0	0	1171	88
Critical Gap Module:												
Critical Gp:	xxxxx	xxxx	xxxxx	6.4	6.5	6.2	4.1	xxxx	xxxxx	xxxxx	xxxx	xxxxx
FollowUpTim:	xxxxx	xxxx	xxxxx	3.5	4.0	3.3	2.2	xxxx	xxxxx	xxxxx	xxxx	xxxxx
Capacity Module:												
Cnflict Vol:	xxxx	xxxx	xxxxx	2423	2423	1235	1269	xxxx	xxxxx	xxxx	xxxx	xxxxx
Potent Cap.:	xxxx	xxxx	xxxxx	36	32	215	548	xxxx	xxxxx	xxxx	xxxx	xxxxx
Move Cap.:	xxxx	xxxx	xxxxx	29	24	212	543	xxxx	xxxxx	xxxx	xxxx	xxxxx
Volume/Cap:	xxxx	xxxx	xxxx	1.46	0.00	0.37	0.21	xxxx	xxxx	xxxx	xxxx	xxxx
Level Of Service Module:												
2Way95thQ:	xxxx	xxxx	xxxxx	xxxx	xxxx	xxxxx	0.8	xxxx	xxxxx	xxxx	xxxx	xxxxx
Control Del:	xxxxx	xxxx	xxxxx	xxxxx	xxxx	xxxxx	13.4	xxxx	xxxxx	xxxxx	xxxx	xxxxx
LOS by Move:	*	*	*	*	*	*	B	*	*	*	*	*
Movement:	LT - LTR - RT			LT - LTR - RT			LT - LTR - RT			LT - LTR - RT		
Shared Cap.:	xxxx	xxxx	xxxxx	xxxx	66	xxxxx	xxxx	xxxx	xxxxx	xxxx	xxxx	xxxxx
SharedQueue:	xxxxx	xxxx	xxxxx	xxxxx	11.0	xxxxx	0.8	xxxx	xxxxx	xxxxx	xxxx	xxxxx
Shrd ConDel:	xxxxx	xxxx	xxxxx	xxxxx	531	xxxxx	13.4	xxxx	xxxxx	xxxxx	xxxx	xxxxx
Shared LOS:	*	*	*	*	F	*	B	*	*	*	*	*
ApproachDel:	xxxxxx			531.2			xxxxxx			xxxxxx		
ApproachLOS:	*			F			*			*		

Note: Queue reported is the number of cars per lane.

Level Of Service Computation Report
2000 HCM Unsignalized Method (Future Volume Alternative)

Intersection #212 SR76 & Couser Cyn Rd

Average Delay (sec/veh): 11.2 Worst Case Level Of Service: F[297.6]

Street Name:	Couser Cyn Rd						SR76					
Approach:	North Bound			South Bound			East Bound			West Bound		
Movement:	L - T - R			L - T - R			L - T - R			L - T - R		
Control:	Stop Sign			Stop Sign			Uncontrolled			Uncontrolled		
Rights:	Include			Include			Include			Include		
Lanes:	0 0 1! 0 0			0 0 1! 0 0			0 0 0 1 0			0 1 0 0 0		
Volume Module:												
Base Vol:	52	0	27	0	0	0	0	918	43	32	1052	0
Growth Adj:	1.00	1.00	1.00	1.00	1.00	1.00	1.00	1.00	1.00	1.00	1.00	1.00
Initial Bse:	52	0	27	0	0	0	0	918	43	32	1052	0
Added Vol:	0	0	0	0	0	0	0	0	0	0	0	0
PasserByVol:	0	0	0	0	0	0	0	0	0	0	0	0
Initial Fut:	52	0	27	0	0	0	0	918	43	32	1052	0
User Adj:	1.00	1.00	1.00	1.00	1.00	1.00	1.00	1.00	1.00	1.00	1.00	1.00
PHF Adj:	0.95	0.95	0.95	0.95	0.95	0.95	0.95	0.95	0.95	0.95	0.95	0.95
PHF Volume:	55	0	28	0	0	0	0	966	45	34	1107	0
Reduct Vol:	0	0	0	0	0	0	0	0	0	0	0	0
FinalVolume:	55	0	28	0	0	0	0	966	45	34	1107	0
Critical Gap Module:												
Critical Gp:	6.4	6.5	6.2	7.1	6.5	6.2	xxxxx	xxxx	xxxxx	4.1	xxxx	xxxxx
FollowUpTim:	3.5	4.0	3.3	3.5	4.0	3.3	xxxxx	xxxx	xxxxx	2.2	xxxx	xxxxx
Capacity Module:												
Cnflict Vol:	2184	2184	1009	2198	2206	1127	xxxx	xxxx	xxxxx	1022	xxxx	xxxxx
Potent Cap.:	50	46	292	32	44	249	xxxx	xxxx	xxxxx	679	xxxx	xxxxx
Move Cap.:	48	43	287	27	41	245	xxxx	xxxx	xxxxx	674	xxxx	xxxxx
Volume/Cap:	1.15	0.00	0.10	0.00	0.00	0.00	xxxx	xxxx	xxxx	0.05	xxxx	xxxx
Level Of Service Module:												
2Way95thQ:	xxxx	xxxx	xxxxx	xxxx	xxxx	xxxxx	xxxx	xxxx	xxxxx	0.2	xxxx	xxxxx
Control Del:	xxxxx	xxxx	xxxxx	xxxxx	xxxx	xxxxx	xxxxx	xxxx	xxxxx	10.6	xxxx	xxxxx
LOS by Move:	*	*	*	*	*	*	*	*	*	B	*	*
Movement:	LT - LTR - RT			LT - LTR - RT			LT - LTR - RT			LT - LTR - RT		
Shared Cap.:	xxxx	67	xxxxx	xxxx	0	xxxxx	xxxx	xxxx	xxxxx	xxxx	xxxx	xxxxx
SharedQueue:	xxxxx	6.7	xxxxx	xxxxx	xxxx	xxxxx	xxxxx	xxxx	xxxxx	0.2	xxxx	xxxxx
Shrd ConDel:	xxxxx	298	xxxxx	xxxxx	xxxx	xxxxx	xxxxx	xxxx	xxxxx	10.6	xxxx	xxxxx
Shared LOS:	*	F	*	*	*	*	*	*	*	B	*	*
ApproachDel:	297.6			xxxxxx			xxxxxx			xxxxxx		
ApproachLOS:	F			*			*			*		

Note: Queue reported is the number of cars per lane.

Level Of Service Computation Report
2000 HCM Operations Method (Future Volume Alternative)

Intersection #214 SR76 & C. Drwy

Cycle (sec): 90 | Critical Vol./Cap.(X): 0.605
Loss Time (sec): 12 | Average Delay (sec/veh): 2.3
Optimal Cycle: OPTIMIZED | Level Of Service: A

Street Name:	C. Drwy									SR76					
Approach:	North Bound			South Bound			East Bound			West Bound		
Movement:	L	T	R	L	T	R	L	T	R	L	T	R
Control:	Protected			Protected			Permitted			Permitted		
Rights:	Include			Include			Include			Include		
Min. Green:	5	5	5	5	5	5	5	5	5	5	5	5
Y+R:	4.0	4.0	4.0	4.0	4.0	4.0	4.0	4.0	4.0	4.0	4.0	4.0
Lanes:	0	0	1! 0	0	1	0	0	0	1	1	0	1
Volume Module:												
Base Vol:	0	0	0	0	0	0	0	927	0	0	893	0
Growth Adj:	1.00	1.00	1.00	1.00	1.00	1.00	1.00	1.00	1.00	1.00	1.00	1.00
Initial Bse:	0	0	0	0	0	0	0	927	0	0	893	0
Added Vol:	0	0	0	0	0	0	0	0	0	0	0	0
PasserByVol:	0	0	0	0	0	0	0	0	0	0	0	0
Initial Fut:	0	0	0	0	0	0	0	927	0	0	893	0
User Adj:	1.00	1.00	1.00	1.00	1.00	1.00	1.00	1.00	1.00	1.00	1.00	1.00
PHF Adj:	0.95	0.95	0.95	0.95	0.95	0.95	0.95	0.95	0.95	0.95	0.95	0.95
PHF Volume:	0	0	0	0	0	0	0	976	0	0	940	0
Reduct Vol:	0	0	0	0	0	0	0	0	0	0	0	0
Reduced Vol:	0	0	0	0	0	0	0	976	0	0	940	0
PCE Adj:	1.00	1.00	1.00	1.00	1.00	1.00	1.00	1.00	1.00	1.00	1.00	1.00
MLF Adj:	1.00	1.00	1.00	1.00	1.00	1.00	1.00	1.00	1.00	1.00	1.00	1.00
FinalVolume:	0	0	0	0	0	0	0	976	0	0	940	0
Saturation Flow Module:												
Sat/Lane:	1900	1900	1900	1900	1900	1900	1900	1900	1900	1900	1900	1900
Adjustment:	1.00	1.00	1.00	1.00	1.00	1.00	1.00	0.98	1.00	1.00	0.98	1.00
Lanes:	0.00	1.00	0.00	1.00	0.00	1.00	1.00	1.00	0.00	0.00	1.00	1.00
Final Sat.:	0	1900	0	1900	0	1900	1900	1862	0	0	1862	1900
Capacity Analysis Module:												
Vol/Sat:	0.00	0.00	0.00	0.00	0.00	0.00	0.00	0.52	0.00	0.00	0.50	0.00
Crit Moves:								****				
Green/Cycle:	0.00	0.00	0.00	0.00	0.00	0.00	0.00	0.87	0.00	0.00	0.87	0.00
Volume/Cap:	0.00	0.00	0.00	0.00	0.00	0.00	0.00	0.60	0.00	0.00	0.58	0.00
Uniform Del:	0.0	0.0	0.0	0.0	0.0	0.0	0.0	1.7	0.0	0.0	1.6	0.0
IncremntDel:	0.0	0.0	0.0	0.0	0.0	0.0	0.0	0.7	0.0	0.0	0.5	0.0
InitQueuDel:	0.0	0.0	0.0	0.0	0.0	0.0	0.0	0.0	0.0	0.0	0.0	0.0
Delay Adj:	0.00	0.00	0.00	0.00	0.00	0.00	0.00	1.00	0.00	0.00	1.00	0.00
Delay/Veh:	0.0	0.0	0.0	0.0	0.0	0.0	0.0	2.3	0.0	0.0	2.2	0.0
User DelAdj:	1.00	1.00	1.00	1.00	1.00	1.00	1.00	1.00	1.00	1.00	1.00	1.00
AdjDel/Veh:	0.0	0.0	0.0	0.0	0.0	0.0	0.0	2.3	0.0	0.0	2.2	0.0
LOS by Move:	A	A	A	A	A	A	A	A	A	A	A	A
HCM2kAvgQ:	0	0	0	0	0	0	0	8	0	0	8	0

Level Of Service Computation Report
2000 HCM Operations Method (Future Volume Alternative)

Intersection #216 SR76 & W. Pala Mission Rd

Cycle (sec): 90 | Critical Vol./Cap.(X): 0.689
Loss Time (sec): 12 | Average Delay (sec/veh): 25.0
Optimal Cycle: OPTIMIZED | Level Of Service: C

Street Name:	W. Pala Mission Rd									SR76		
Approach:	North Bound			South Bound			East Bound			West Bound		
Movement:	L	T	R	L	T	R	L	T	R	L	T	R
Control:	Split Phase			Split Phase			Protected			Protected		
Rights:	Include			Include			Include			Include		
Min. Green:	5	5	5	5	5	5	5	5	5	5	5	5
Y+R:	4.0	4.0	4.0	4.0	4.0	4.0	4.0	4.0	4.0	4.0	4.0	4.0
Lanes:	1	0	0 1	0	0	1	0	0	1	1	0	0 1
Volume Module:												
Base Vol:	78	36	31	36	32	134	196	586	88	61	567	37
Growth Adj:	1.00	1.00	1.00	1.00	1.00	1.00	1.00	1.00	1.00	1.00	1.00	1.00
Initial Bse:	78	36	31	36	32	134	196	586	88	61	567	37
Added Vol:	0	0	0	0	0	0	0	0	0	0	0	0
PasserByVol:	0	0	0	0	0	0	0	0	0	0	0	0
Initial Fut:	78	36	31	36	32	134	196	586	88	61	567	37
User Adj:	1.00	1.00	1.00	1.00	1.00	1.00	1.00	1.00	1.00	1.00	1.00	1.00
PHF Adj:	0.95	0.95	0.95	0.95	0.95	0.95	0.95	0.95	0.95	0.95	0.95	0.95
PHF Volume:	82	38	33	38	34	141	206	617	93	64	597	39
Reduct Vol:	0	0	0	0	0	0	0	0	0	0	0	0
Reduced Vol:	82	38	33	38	34	141	206	617	93	64	597	39
PCE Adj:	1.00	1.00	1.00	1.00	1.00	1.00	1.00	1.00	1.00	1.00	1.00	1.00
MLF Adj:	1.00	1.00	1.00	1.00	1.00	1.00	1.00	1.00	1.00	1.00	1.00	1.00
FinalVolume:	82	38	33	38	34	141	206	617	93	64	597	39
Saturation Flow Module:												
Sat/Lane:	1900	1900	1900	1900	1900	1900	1900	1900	1900	1900	1900	1900
Adjustment:	0.93	0.91	0.91	0.95	0.95	0.83	0.93	0.91	0.91	0.93	0.97	0.97
Lanes:	1.00	0.54	0.46	0.53	0.47	1.00	1.00	1.74	0.26	1.00	0.94	0.06
Final Sat.:	1769	931	802	960	853	1583	1769	3014	453	1769	1732	113
Capacity Analysis Module:												
Vol/Sat:	0.05	0.04	0.04	0.04	0.04	0.09	0.12	0.20	0.20	0.04	0.34	0.34
Crit Moves:	****					****	****				****	
Green/Cycle:	0.07	0.07	0.07	0.13	0.13	0.13	0.17	0.53	0.53	0.14	0.50	0.50
Volume/Cap:	0.69	0.60	0.60	0.30	0.30	0.69	0.69	0.39	0.39	0.25	0.69	0.69
Uniform Del:	41.0	40.8	40.8	35.5	35.5	37.4	35.1	12.7	12.7	34.3	17.1	17.1
IncremntDel:	15.7	8.6	8.6	0.7	0.7	9.5	6.6	0.1	0.1	0.5	2.2	2.2
InitQueuDel:	0.0	0.0	0.0	0.0	0.0	0.0	0.0	0.0	0.0	0.0	0.0	0.0
Delay Adj:	1.00	1.00	1.00	1.00	1.00	1.00	1.00	1.00	1.00	1.00	1.00	1.00
Delay/Veh:	56.7	49.4	49.4	36.2	36.2	46.9	41.8	12.8	12.8	34.8	19.3	19.3
User DelAdj:	1.00	1.00	1.00	1.00	1.00	1.00	1.00	1.00	1.00	1.00	1.00	1.00
AdjDel/Veh:	56.7	49.4	49.4	36.2	36.2	46.9	41.8	12.8	12.8	34.8	19.3	19.3
LOS by Move:	E	D	D	D	D	D	D	B	B	C	B	B
HCM2kAvgQ:	4	3	3	2	2	5	7	6	6	2	14	14

Level Of Service Computation Report
2000 HCM 4-Way Stop Method (Future Volume Alternative)

Intersection #217 Pala Mission Rd & Pala Temecula Rd

Cycle (sec): 100 Critical Vol./Cap.(X): 0.719
Loss Time (sec): 0 Average Delay (sec/veh): 17.3
Optimal Cycle: 0 Level Of Service: C

Street Name:	Pala Temecula Rd						Pala Mission Rd					
Approach:	North Bound			South Bound			East Bound			West Bound		
Movement:	L -	T -	R	L -	T -	R	L -	T -	R	L -	T -	R
Control:	Stop Sign			Stop Sign			Stop Sign			Stop Sign		
Rights:	Include			Include			Include			Include		
Min. Green:	5	5	5	5	5	5	5	5	5	5	5	5
Lanes:	0 0	1! 0	0	0 0	1! 0	0	0 0	1! 0	0	0 0	1! 0	0
Volume Module:												
Base Vol:	1	30	4	216	30	169	258	43	4	1	47	315
Growth Adj:	1.00	1.00	1.00	1.00	1.00	1.00	1.00	1.00	1.00	1.00	1.00	1.00
Initial Bse:	1	30	4	216	30	169	258	43	4	1	47	315
Added Vol:	0	0	0	0	0	0	0	0	0	0	0	0
PasserByVol:	0	0	0	0	0	0	0	0	0	0	0	0
Initial Fut:	1	30	4	216	30	169	258	43	4	1	47	315
User Adj:	1.00	1.00	1.00	1.00	1.00	1.00	1.00	1.00	1.00	1.00	1.00	1.00
PHF Adj:	0.95	0.95	0.95	0.95	0.95	0.95	0.95	0.95	0.95	0.95	0.95	0.95
PHF Volume:	1	32	4	227	32	178	272	45	4	1	49	332
Reduct Vol:	0	0	0	0	0	0	0	0	0	0	0	0
Reduced Vol:	1	32	4	227	32	178	272	45	4	1	49	332
PCE Adj:	1.00	1.00	1.00	1.00	1.00	1.00	1.00	1.00	1.00	1.00	1.00	1.00
MLF Adj:	1.00	1.00	1.00	1.00	1.00	1.00	1.00	1.00	1.00	1.00	1.00	1.00
FinalVolume:	1	32	4	227	32	178	272	45	4	1	49	332
Saturation Flow Module:												
Adjustment:	1.00	1.00	1.00	1.00	1.00	1.00	1.00	1.00	1.00	1.00	1.00	1.00
Lanes:	0.03	0.86	0.11	0.52	0.07	0.41	0.85	0.14	0.01	0.01	0.13	0.86
Final Sat.:	12	369	49	316	44	247	478	80	7	2	83	555
Capacity Analysis Module:												
Vol/Sat:	0.09	0.09	0.09	0.72	0.72	0.72	0.57	0.57	0.57	0.60	0.60	0.60
Crit Moves:	****			****			****			****		
Delay/Veh:	10.2	10.2	10.2	20.6	20.6	20.6	16.0	16.0	16.0	15.2	15.2	15.2
Delay Adj:	1.00	1.00	1.00	1.00	1.00	1.00	1.00	1.00	1.00	1.00	1.00	1.00
AdjDel/Veh:	10.2	10.2	10.2	20.6	20.6	20.6	16.0	16.0	16.0	15.2	15.2	15.2
LOS by Move:	B	B	B	C	C	C	C	C	C	C	C	C
ApproachDel:	10.2			20.6			16.0			15.2		
Delay Adj:	1.00			1.00			1.00			1.00		
ApprAdjDel:	10.2			20.6			16.0			15.2		
LOS by Appr:	B			C			C			C		
AllWayAvgQ:	0.1	0.1	0.1	2.0	2.0	2.0	1.1	1.1	1.1	1.2	1.2	1.2

Note: Queue reported is the number of cars per lane.

Level Of Service Computation Report
2000 HCM Unsignalized Method (Future Volume Alternative)

Intersection #218 SR76 & Brittain Rd

Average Delay (sec/veh): 0.1 Worst Case Level Of Service: C[19.3]

Street Name:	Brittain Rd						SR76					
Approach:	North Bound			South Bound			East Bound			West Bound		
Movement:	L -	T -	R	L -	T -	R	L -	T -	R	L -	T -	R
Control:	Stop Sign			Stop Sign			Uncontrolled			Uncontrolled		
Rights:	Include			Include			Include			Include		
Lanes:	0 0	0 0	0	0 0	1! 0	0	0 1	0 0	0	0 0	0 1	0
Volume Module:												
Base Vol:	0	0	0	1	0	1	5	557	0	0	659	5
Growth Adj:	1.00	1.00	1.00	1.00	1.00	1.00	1.00	1.00	1.00	1.00	1.00	1.00
Initial Bse:	0	0	0	1	0	1	5	557	0	0	659	5
Added Vol:	0	0	0	0	0	0	0	0	0	0	0	0
PasserByVol:	0	0	0	0	0	0	0	0	0	0	0	0
Initial Fut:	0	0	0	1	0	1	5	557	0	0	659	5
User Adj:	1.00	1.00	1.00	1.00	1.00	1.00	1.00	1.00	1.00	1.00	1.00	1.00
PHF Adj:	0.95	0.95	0.95	0.95	0.95	0.95	0.95	0.95	0.95	0.95	0.95	0.95
PHF Volume:	0	0	0	1	0	1	5	586	0	0	694	5
Reduct Vol:	0	0	0	0	0	0	0	0	0	0	0	0
FinalVolume:	0	0	0	1	0	1	5	586	0	0	694	5
Critical Gap Module:												
Critical Gp:	xxxxx	xxxx	xxxxx	6.4	6.5	6.2	4.1	xxxx	xxxxx	xxxxx	xxxx	xxxxx
FollowUpTim:	xxxxx	xxxx	xxxxx	3.5	4.0	3.3	2.2	xxxx	xxxxx	xxxxx	xxxx	xxxxx
Capacity Module:												
Cnflict Vol:	xxxx	xxxx	xxxxx	1293	1293	696	699	xxxx	xxxxx	xxxx	xxxx	xxxxx
Potent Cap.:	xxxx	xxxx	xxxxx	180	163	441	898	xxxx	xxxxx	xxxx	xxxx	xxxxx
Move Cap.:	xxxx	xxxx	xxxxx	179	162	441	898	xxxx	xxxxx	xxxx	xxxx	xxxxx
Volume/Cap:	xxxx	xxxx	xxxx	0.01	0.00	0.00	0.01	xxxx	xxxx	xxxx	xxxx	xxxx
Level Of Service Module:												
2Way95thQ:	xxxx	xxxx	xxxxx	xxxx	xxxx	xxxxx	0.0	xxxx	xxxxx	xxxx	xxxx	xxxxx
Control Del:	xxxxx	xxxx	xxxxx	xxxxx	xxxx	xxxxx	9.0	xxxx	xxxxx	xxxxx	xxxx	xxxxx
LOS by Move:	*	*	*	*	*	*	A	*	*	*	*	*
Movement:	LT -	LTR -	RT	LT -	LTR -	RT	LT -	LTR -	RT	LT -	LTR -	RT
Shared Cap.:	xxxx	xxxx	xxxxx	xxxx	255	xxxxx	xxxx	xxxx	xxxxx	xxxx	xxxx	xxxxx
SharedQueue:	xxxxx	xxxx	xxxxx	xxxxx	0.0	xxxxx	0.0	xxxx	xxxxx	xxxxx	xxxx	xxxxx
Shrd ConDel:	xxxxx	xxxx	xxxxx	xxxxx	19.3	xxxxx	9.0	xxxx	xxxxx	xxxxx	xxxx	xxxxx
Shared LOS:	*	*	*	*	C	*	A	*	*	*	*	*
ApproachDel:	xxxxxx			19.3			xxxxxx			xxxxxx		
ApproachLOS:	*			C			*			*		

Note: Queue reported is the number of cars per lane.

Level Of Service Computation Report
2000 HCM Unsignalized Method (Future Volume Alternative)

Intersection #219 SR76 & E. Pala Mission Rd

Average Delay (sec/veh): 70.6 Worst Case Level Of Service: F[512.9]

Street Name:	E. Pala Mission Rd									SR76						
Approach:	North Bound				South Bound				East Bound				West Bound			
Movement:	L	-	T	-	R	L	-	T	-	R	L	-	T	-	R	L	-	T	-	R
Control:	Stop Sign					Stop Sign					Uncontrolled					Uncontrolled				
Rights:	Include					Include					Include					Include				
Lanes:	0	0	0	0	0	0	0	1!	0	0	0	1	0	0	0	0	0	0	1	0
Volume Module:																				
Base Vol:	0	0	0	243	0	4	3	568	0	0	690	286								
Growth Adj:	1.00	1.00	1.00	1.00	1.00	1.00	1.00	1.00	1.00	1.00	1.00	1.00								
Initial Bse:	0	0	0	243	0	4	3	568	0	0	690	286								
Added Vol:	0	0	0	0	0	0	0	0	0	0	0	0								
PasserByVol:	0	0	0	0	0	0	0	0	0	0	0	0								
Initial Fut:	0	0	0	243	0	4	3	568	0	0	690	286								
User Adj:	1.00	1.00	1.00	1.00	1.00	1.00	1.00	1.00	1.00	1.00	1.00	1.00								
PHF Adj:	0.95	0.95	0.95	0.95	0.95	0.95	0.95	0.95	0.95	0.95	0.95	0.95								
PHF Volume:	0	0	0	256	0	4	3	598	0	0	726	301								
Reduct Vol:	0	0	0	0	0	0	0	0	0	0	0	0								
FinalVolume:	0	0	0	256	0	4	3	598	0	0	726	301								
Critical Gap Module:																				
Critical Gp:	xxxxx	xxxx	xxxxx	6.4	6.5	6.2	4.1	xxxx	xxxxx	xxxxx	xxxx	xxxxx								
FollowUpTim:	xxxxx	xxxx	xxxxx	3.5	4.0	3.3	2.2	xxxx	xxxxx	xxxxx	xxxx	xxxxx								
Capacity Module:																				
Cnflict Vol:	xxxx	xxxx	xxxxx	1501	1501	897	1037	xxxx	xxxxx	xxxx	xxxx	xxxxx								
Potent Cap.:	xxxx	xxxx	xxxxx	134	122	339	670	xxxx	xxxxx	xxxx	xxxx	xxxxx								
Move Cap.:	xxxx	xxxx	xxxxx	131	119	333	665	xxxx	xxxxx	xxxx	xxxx	xxxxx								
Volume/Cap:	xxxx	xxxx	xxxx	1.95	0.00	0.01	0.00	xxxx	xxxx	xxxx	xxxx	xxxx								
Level Of Service Module:																				
2Way95thQ:	xxxx	xxxx	xxxxx	xxxx	xxxx	xxxxx	0.0	xxxx	xxxxx	xxxx	xxxx	xxxxx								
Control Del:	xxxxx	xxxx	xxxxx	xxxxx	xxxx	xxxxx	10.4	xxxx	xxxxx	xxxxx	xxxx	xxxxx								
LOS by Move:	*	*	*	*	*	*	B	*	*	*	*	*								
Movement:	LT	-	LTR	-	RT	LT	-	LTR	-	RT	LT	-	LTR	-	RT					
Shared Cap.:	xxxx	xxxx	xxxxx	xxxx	133	xxxxx	xxxx	xxxx	xxxxx	xxxx	xxxx	xxxxx								
SharedQueue:	xxxxx	xxxx	xxxxx	xxxxx	20.6	xxxxx	0.0	xxxx	xxxxx	xxxxx	xxxx	xxxxx								
Shrd ConDel:	xxxxx	xxxx	xxxxx	xxxxx	513	xxxxx	10.4	xxxx	xxxxx	xxxxx	xxxx	xxxxx								
Shared LOS:	*	*	*	*	F	*	B	*	*	*	*	*								
ApproachDel:	xxxxxx			512.9			xxxxxx			xxxxxx										
ApproachLOS:	*				F		*			*										

Note: Queue reported is the number of cars per lane.

Level Of Service Computation Report
2000 HCM Unsignalized Method (Future Volume Alternative)

Intersection #220 SR76 & Lilac Rd

Average Delay (sec/veh): 4.6 Worst Case Level Of Service: F[93.0]

Street Name:	Lilac Rd									SR76						
Approach:	North Bound				South Bound				East Bound				West Bound			
Movement:	L	-	T	-	R	L	-	T	-	R	L	-	T	-	R	L	-	T	-	R
Control:	Stop Sign					Stop Sign					Uncontrolled					Uncontrolled				
Rights:	Include					Include					Include					Include				
Lanes:	0	0	1!	0	0	0	0	0	0	0	0	0	0	1	0	0	1	0	0	0
Volume Module:																				
Base Vol:	46	0	40	0	0	0	0	759	46	45	899	0								
Growth Adj:	1.00	1.00	1.00	1.00	1.00	1.00	1.00	1.00	1.00	1.00	1.00	1.00								
Initial Bse:	46	0	40	0	0	0	0	759	46	45	899	0								
Added Vol:	0	0	0	0	0	0	0	0	0	0	0	0								
PasserByVol:	0	0	0	0	0	0	0	0	0	0	0	0								
Initial Fut:	46	0	40	0	0	0	0	759	46	45	899	0								
User Adj:	1.00	1.00	1.00	1.00	1.00	1.00	1.00	1.00	1.00	1.00	1.00	1.00								
PHF Adj:	0.95	0.95	0.95	0.95	0.95	0.95	0.95	0.95	0.95	0.95	0.95	0.95								
PHF Volume:	48	0	42	0	0	0	0	799	48	47	946	0								
Reduct Vol:	0	0	0	0	0	0	0	0	0	0	0	0								
FinalVolume:	48	0	42	0	0	0	0	799	48	47	946	0								
Critical Gap Module:																				
Critical Gp:	6.4	6.5	6.2	xxxxx	xxxx	xxxxx	xxxxx	xxxx	xxxxx	4.1	xxxx	xxxxx								
FollowUpTim:	3.5	4.0	3.3	xxxxx	xxxx	xxxxx	xxxxx	xxxx	xxxxx	2.2	xxxx	xxxxx								
Capacity Module:																				
Cnflict Vol:	1864	1864	823	xxxx	xxxx	xxxxx	xxxx	xxxx	xxxxx	847	xxxx	xxxxx								
Potent Cap.:	80	73	373	xxxx	xxxx	xxxxx	xxxx	xxxx	xxxxx	790	xxxx	xxxxx								
Move Cap.:	76	68	373	xxxx	xxxx	xxxxx	xxxx	xxxx	xxxxx	790	xxxx	xxxxx								
Volume/Cap:	0.63	0.00	0.11	xxxx	xxxx	xxxx	xxxx	xxxx	xxxx	0.06	xxxx	xxxx								
Level Of Service Module:																				
2Way95thQ:	xxxx	xxxx	xxxxx	xxxx	xxxx	xxxxx	xxxx	xxxx	xxxxx	0.2	xxxx	xxxxx								
Control Del:	xxxxx	xxxx	xxxxx	xxxxx	xxxx	xxxxx	xxxxx	xxxx	xxxxx	9.8	xxxx	xxxxx								
LOS by Move:	*	*	*	*	*	*	*	*	*	A	*	*								
Movement:	LT	-	LTR	-	RT	LT	-	LTR	-	RT	LT	-	LTR	-	RT					
Shared Cap.:	xxxx	121	xxxxx	xxxx	xxxx	xxxxx	xxxx	xxxx	xxxxx	xxxx	xxxx	xxxxx								
SharedQueue:	xxxxx	4.2	xxxxx	xxxxx	xxxx	xxxxx	xxxxx	xxxx	xxxxx	0.2	xxxx	xxxxx								
Shrd ConDel:	xxxxx	93.0	xxxxx	xxxxx	xxxx	xxxxx	xxxxx	xxxx	xxxxx	9.8	xxxx	xxxxx								
Shared LOS:	*	F	*	*	*	*	*	*	*	A	*	*								
ApproachDel:	93.0			xxxxxx			xxxxxx			xxxxxx										
ApproachLOS:	F				*			*			*									

Note: Queue reported is the number of cars per lane.

Level Of Service Computation Report
2000 HCM Unsignalized Method (Future Volume Alternative)

Intersection #221 SR76 & Adams Dr

Average Delay (sec/veh): 0.7 Worst Case Level Of Service: D[32.3]

Street Name:	Adams Dr									SR76		
Approach:	North Bound			South Bound			East Bound			West Bound		
Movement:	L - T - R			L - T - R			L - T - R			L - T - R		
Control:	Stop Sign			Stop Sign			Uncontrolled			Uncontrolled		
Rights:	Include			Include			Include			Include		
Lanes:	0 0 1! 0 0			0 0 1! 0 0			0 1 0 0 0			0 0 0 1 0		
Volume Module:												
Base Vol:	0	0	0	10	0	14	31	645	0	0	923	20
Growth Adj:	1.00	1.00	1.00	1.00	1.00	1.00	1.00	1.00	1.00	1.00	1.00	1.00
Initial Bse:	0	0	0	10	0	14	31	645	0	0	923	20
Added Vol:	0	0	0	0	0	0	0	0	0	0	0	0
PasserByVol:	0	0	0	0	0	0	0	0	0	0	0	0
Initial Fut:	0	0	0	10	0	14	31	645	0	0	923	20
User Adj:	1.00	1.00	1.00	1.00	1.00	1.00	1.00	1.00	1.00	1.00	1.00	1.00
PHF Adj:	0.95	0.95	0.95	0.95	0.95	0.95	0.95	0.95	0.95	0.95	0.95	0.95
PHF Volume:	0	0	0	11	0	15	33	679	0	0	972	21
Reduct Vol:	0	0	0	0	0	0	0	0	0	0	0	0
FinalVolume:	0	0	0	11	0	15	33	679	0	0	972	21
Critical Gap Module:												
Critical Gp:	7.1	6.5	6.2	6.4	6.5	6.2	4.1	xxxx	xxxxx	xxxxx	xxxx	xxxxx
FollowUpTim:	3.5	4.0	3.3	3.5	4.0	3.3	2.2	xxxx	xxxxx	xxxxx	xxxx	xxxxx
Capacity Module:												
Cnflict Vol:	1734	1737	679	1726	1726	982	993	xxxx	xxxxx	xxxx	xxxx	xxxxx
Potent Cap.:	69	87	452	97	89	302	697	xxxx	xxxxx	xxxx	xxxx	xxxxx
Move Cap.:	63	83	452	94	84	302	697	xxxx	xxxxx	xxxx	xxxx	xxxxx
Volume/Cap:	0.00	0.00	0.00	0.11	0.00	0.05	0.05	xxxx	xxxx	xxxx	xxxx	xxxx
Level Of Service Module:												
2Way95thQ:	xxxx	xxxx	xxxxx	xxxx	xxxx	xxxxx	0.1	xxxx	xxxxx	xxxx	xxxx	xxxxx
Control Del:	xxxxx	xxxx	xxxxx	xxxxx	xxxx	xxxxx	10.4	xxxx	xxxxx	xxxxx	xxxx	xxxxx
LOS by Move:	*	*	*	*	*	*	B	*	*	*	*	*
Movement:	LT - LTR - RT			LT - LTR - RT			LT - LTR - RT			LT - LTR - RT		
Shared Cap.:	xxxx	0	xxxxx	xxxx	157	xxxxx	xxxx	xxxx	xxxxx	xxxx	xxxx	xxxxx
SharedQueue:	xxxxx	xxxx	xxxxx	xxxxx	0.6	xxxxx	0.1	xxxx	xxxxx	xxxxx	xxxx	xxxxx
Shrd ConDel:	xxxxx	xxxx	xxxxx	xxxxx	32.3	xxxxx	10.4	xxxx	xxxxx	xxxxx	xxxx	xxxxx
Shared LOS:	*	*	*	*	D	*	B	*	*	*	*	*
ApproachDel:	xxxxxx			32.3			xxxxxx			xxxxxx		
ApproachLOS:	*			D			*			*		

Note: Queue reported is the number of cars per lane.

Level Of Service Computation Report
2000 HCM Unsignalized Method (Future Volume Alternative)

Intersection #222 SR76 & Cole Grade Rd

Average Delay (sec/veh): 118.5 Worst Case Level Of Service: F[967.0]

Street Name:	Cole Grade Rd									SR76		
Approach:	North Bound			South Bound			East Bound			West Bound		
Movement:	L - T - R			L - T - R			L - T - R			L - T - R		
Control:	Stop Sign			Stop Sign			Uncontrolled			Uncontrolled		
Rights:	Include			Include			Include			Include		
Lanes:	0 0 1! 0 0			0 0 0 1 0			0 0 1! 0 0			0 0 1! 0 0		
Volume Module:												
Base Vol:	154	5	71	0	2	5	2	557	210	73	802	4
Growth Adj:	1.00	1.00	1.00	1.00	1.00	1.00	1.00	1.00	1.00	1.00	1.00	1.00
Initial Bse:	154	5	71	0	2	5	2	557	210	73	802	4
Added Vol:	0	0	0	0	0	0	0	0	0	0	0	0
PasserByVol:	0	0	0	0	0	0	0	0	0	0	0	0
Initial Fut:	154	5	71	0	2	5	2	557	210	73	802	4
User Adj:	1.00	1.00	1.00	1.00	1.00	1.00	1.00	1.00	1.00	1.00	1.00	1.00
PHF Adj:	0.95	0.95	0.95	0.95	0.95	0.95	0.95	0.95	0.95	0.95	0.95	0.95
PHF Volume:	162	5	75	0	2	5	2	586	221	77	844	4
Reduct Vol:	0	0	0	0	0	0	0	0	0	0	0	0
FinalVolume:	162	5	75	0	2	5	2	586	221	77	844	4
Critical Gap Module:												
Critical Gp:	7.1	6.5	6.2	xxxxx	6.5	6.2	4.1	xxxx	xxxxx	4.1	xxxx	xxxxx
FollowUpTim:	3.5	4.0	3.3	xxxxx	4.0	3.3	2.2	xxxx	xxxxx	2.2	xxxx	xxxxx
Capacity Module:												
Cnflict Vol:	1725	1723	717	xxxx	1832	866	858	xxxx	xxxxx	817	xxxx	xxxxx
Potent Cap.:	70	89	430	xxxx	76	353	782	xxxx	xxxxx	811	xxxx	xxxxx
Move Cap.:	61	79	423	xxxx	67	347	776	xxxx	xxxxx	804	xxxx	xxxxx
Volume/Cap:	2.66	0.07	0.18	xxxx	0.03	0.02	0.00	xxxx	xxxx	0.10	xxxx	xxxx
Level Of Service Module:												
2Way95thQ:	xxxx	xxxx	xxxxx	xxxx	xxxx	xxxxx	0.0	xxxx	xxxxx	0.3	xxxx	xxxxx
Control Del:	xxxxx	xxxx	xxxxx	xxxxx	xxxx	xxxxx	9.7	xxxx	xxxxx	10.0	xxxx	xxxxx
LOS by Move:	*	*	*	*	*	*	A	*	*	A	*	*
Movement:	LT - LTR - RT			LT - LTR - RT			LT - LTR - RT			LT - LTR - RT		
Shared Cap.:	xxxx	83	xxxxx	xxxx	xxxx	159	xxxx	xxxx	xxxxx	xxxx	xxxx	xxxxx
SharedQueue:	xxxxx	23.7	xxxxx	xxxxx	xxxx	0.1	xxxxx	xxxx	xxxxx	xxxxx	xxxx	xxxxx
Shrd ConDel:	xxxxx	967	xxxxx	xxxxx	xxxx	28.8	xxxxx	xxxx	xxxxx	xxxxx	xxxx	xxxxx
Shared LOS:	*	F	*	*	*	D	*	*	*	*	*	*
ApproachDel:	967.0			28.8			xxxxxx			xxxxxx		
ApproachLOS:	F			D			*			*		

Note: Queue reported is the number of cars per lane.

Scenario Report

Scenario:	Ex AM + Proj + Cum
Command:	Default Command
Volume:	Ex AM + Cum
Geometry:	Cumulative
Impact Fee:	Default Impact Fee
Trip Generation:	AM
Trip Distribution:	Project
Paths:	Default Path
Routes:	Default Route
Configuration:	Default Configuration

Impact Analysis Report
Level Of Service

Intersection	Base LOS	Base Del/ Veh	Base V/ C	Future LOS	Future Del/ Veh	Future V/ C	Change in
#201 SR76 & Vista Way	F	252.2	1.683	F	256.6	1.698	+ 4.420 D/V
#202 Mission Ave & River Rd	F	220.3	1.606	F	226.7	1.625	+ 6.376 D/V
#203 Mission Rd & Olive Hill Rd	F	136.4	1.238	F	139.3	1.246	+ 2.858 D/V
#204 SR76 & Mission Rd	F	184.9	1.314	F	188.9	1.325	+ 3.982 D/V
#205 SR76 & Gird Rd	F	165.7	1.445	F	173.4	1.470	+ 7.720 D/V
#206 SR76 & Old Hwy 395	F	160.4	1.270	F	162.7	1.280	+ 2.282 D/V
#207 SR76 & I-15 SB Ramps	F	197.6	1.488	F	221.1	1.565	+23.502 D/V
#208 SR76 & I-15 NB Ramps	F	95.8	1.122	F	127.7	1.244	+31.895 D/V
#209 SR76 & Pankey Rd	C	23.0	0.424	C	22.0	0.476	-0.952 D/V
#210 SR76 & Horse Ranch Creek Rd	B	19.6	0.390	B	18.2	0.450	-1.464 D/V
#211 SR76 & Rice Cyn Rd	F	114.7	0.764	F	465.8	1.467	+351.025 D/V
#212 SR76 & Couser Cyn Rd	F	69.3	0.611	F	232.7	1.069	+163.365 D/V
#214 SR76 & C. Drwy	A	1.6	0.541	B	17.8	0.751	+16.192 D/V
#216 SR76 & W. Pala Mission Rd	C	23.9	0.480	C	25.3	0.577	+ 1.370 D/V
#217 Pala Mission Rd & Pala Temecul	B	13.3	0.631	C	15.2	0.683	+ 0.052 V/C
#218 SR76 & Brittain Rd	B	10.8	0.007	B	11.0	0.007	+ 0.203 D/V
#219 SR76 & E. Pala Mission Rd	D	34.0	0.629	E	39.5	0.675	+ 5.467 D/V
#220 SR76 & Lilac Rd	D	25.8	0.339	D	28.5	0.380	+ 2.787 D/V
#221 SR76 & Adams Dr	B	13.9	0.046	B	14.2	0.048	+ 0.291 D/V
#222 SR76 & Cole Grade Rd	F	287.0	1.266	F	307.2	1.310	+20.122 D/V

Level Of Service Computation Report
2000 HCM Operations Method (Future Volume Alternative)

Intersection #201 SR76 & Vista Way

Cycle (sec): 180 Critical Vol./Cap.(X): 1.698
Loss Time (sec): 16 Average Delay (sec/veh): 256.6
Optimal Cycle: OPTIMIZED Level Of Service: F

Street Name:	SR76									Vista Way		
Approach:	North Bound			South Bound			East Bound			West Bound		
Movement:	L -	T -	R	L -	T -	R	L -	T -	R	L -	T -	R
Control:	Protected			Protected			Protected			Protected		
Rights:	Include			Include			Include			Include		
Min. Green:	5	5	5	5	5	5	5	5	5	5	5	5
Y+R:	4.0	4.0	4.0	4.0	4.0	4.0	4.0	4.0	4.0	4.0	4.0	4.0
Lanes:	1 0	1	1 0	2 0	0	1 0	0 0	1!	0 0	0 1	0 0	1
Volume Module:												
Base Vol:	80	1099	404	321	1689	24	9	194	286	335	29	308
Growth Adj:	1.00	1.00	1.00	1.00	1.00	1.00	1.00	1.00	1.00	1.00	1.00	1.00
Initial Bse:	80	1099	404	321	1689	24	9	194	286	335	29	308
Added Vol:	1	7	0	5	19	0	0	1	1	0	1	2
PasserByVol:	0	0	0	0	0	0	0	0	0	0	0	0
Initial Fut:	81	1106	404	326	1708	24	9	195	287	335	30	310
User Adj:	1.00	1.00	1.00	1.00	1.00	1.00	1.00	1.00	1.00	1.00	1.00	1.00
PHF Adj:	0.95	0.95	0.95	0.95	0.95	0.95	0.95	0.95	0.95	0.95	0.95	0.95
PHF Volume:	85	1164	425	343	1798	25	9	205	302	353	32	326
Reduct Vol:	0	0	0	0	0	0	0	0	0	0	0	0
Reduced Vol:	85	1164	425	343	1798	25	9	205	302	353	32	326
PCE Adj:	1.00	1.00	1.00	1.00	1.00	1.00	1.00	1.00	1.00	1.00	1.00	1.00
MLF Adj:	1.00	1.00	1.00	1.00	1.00	1.00	1.00	1.00	1.00	1.00	1.00	1.00
FinalVolume:	85	1164	425	343	1798	25	9	205	302	353	32	326
Saturation Flow Module:												
Sat/Lane:	1900	1900	1900	1900	1900	1900	1900	1900	1900	1900	1900	1900
Adjustment:	0.93	0.89	0.89	0.90	0.98	0.98	0.90	0.90	0.90	0.94	0.94	0.83
Lanes:	1.00	1.46	0.54	2.00	0.99	0.01	0.02	0.40	0.58	0.92	0.08	1.00
Final Sat.:	1769	2488	909	3432	1833	26	31	680	1001	1634	146	1583
Capacity Analysis Module:												
Vol/Sat:	0.05	0.47	0.47	0.10	0.98	0.98	0.30	0.30	0.30	0.22	0.22	0.21
Crit Moves:	****				****		****				****	
Green/Cycle:	0.03	0.50	0.50	0.11	0.58	0.58	0.18	0.18	0.18	0.13	0.13	0.13
Volume/Cap:	1.70	0.94	0.94	0.94	1.70	1.70	1.70	1.70	1.70	1.70	1.70	1.62
Uniform Del:	87.4	42.4	42.4	79.8	38.0	38.0	74.0	74.0	74.0	78.6	78.6	78.6
IncremntDel:	385.1	10.4	10.4	31.2	318	318.0	327.8	328	327.8	332.3	332	301.4
InitQueuDel:	0.0	0.0	0.0	0.0	0.0	0.0	0.0	0.0	0.0	0.0	0.0	0.0
Delay Adj:	1.00	1.00	1.00	1.00	1.00	1.00	1.00	1.00	1.00	1.00	1.00	1.00
Delay/Veh:	472.5	52.7	52.7	111.0	356	356.0	401.8	402	401.8	410.8	411	380.0
User DelAdj:	1.00	1.00	1.00	1.00	1.00	1.00	1.00	1.00	1.00	1.00	1.00	1.00
AdjDel/Veh:	472.5	52.7	52.7	111.0	356	356.0	401.8	402	401.8	410.8	411	380.0
LOS by Move:	F	D	D	F	F	F	F	F	F	F	F	F
HCM2kAvgQ:	10	47	47	13	187	187	55	55	55	41	41	34

Level Of Service Computation Report
2000 HCM Operations Method (Future Volume Alternative)

Intersection #202 Mission Ave & River Rd

Cycle (sec): 180 Critical Vol./Cap.(X): 1.625
Loss Time (sec): 16 Average Delay (sec/veh): 226.7
Optimal Cycle: OPTIMIZED Level Of Service: F

Street Name:	SR76									River Rd		
Approach:	North Bound			South Bound			East Bound			West Bound		
Movement:	L -	T -	R	L -	T -	R	L -	T -	R	L -	T -	R
Control:	Protected			Protected			Protected			Protected		
Rights:	Include			Include			Include			Include		
Min. Green:	5	5	5	5	5	5	5	5	5	5	5	5
Y+R:	4.0	4.0	4.0	4.0	4.0	4.0	4.0	4.0	4.0	4.0	4.0	4.0
Lanes:	1 0	1	0 0	0 0	0	1 0	1 0	0	0 1	0 0	0	0
Volume Module:												
Base Vol:	155	1613	0	0	1908	273	143	0	176	0	0	0
Growth Adj:	1.00	1.00	1.00	1.00	1.00	1.00	1.00	1.00	1.00	1.00	1.00	1.00
Initial Bse:	155	1613	0	0	1908	273	143	0	176	0	0	0
Added Vol:	0	9	0	0	23	7	3	0	0	0	0	0
PasserByVol:	0	0	0	0	0	0	0	0	0	0	0	0
Initial Fut:	155	1622	0	0	1931	280	146	0	176	0	0	0
User Adj:	1.00	1.00	1.00	1.00	1.00	1.00	1.00	1.00	1.00	1.00	1.00	1.00
PHF Adj:	0.95	0.95	0.95	0.95	0.95	0.95	0.95	0.95	0.95	0.95	0.95	0.95
PHF Volume:	163	1707	0	0	2033	295	154	0	185	0	0	0
Reduct Vol:	0	0	0	0	0	0	0	0	0	0	0	0
Reduced Vol:	163	1707	0	0	2033	295	154	0	185	0	0	0
PCE Adj:	1.00	1.00	1.00	1.00	1.00	1.00	1.00	1.00	1.00	1.00	1.00	1.00
MLF Adj:	1.00	1.00	1.00	1.00	1.00	1.00	1.00	1.00	1.00	1.00	1.00	1.00
FinalVolume:	163	1707	0	0	2033	295	154	0	185	0	0	0
Saturation Flow Module:												
Sat/Lane:	1900	1900	1900	1900	1900	1900	1900	1900	1900	1900	1900	1900
Adjustment:	0.93	0.98	1.00	1.00	0.96	0.96	0.93	1.00	0.83	1.00	1.00	1.00
Lanes:	1.00	1.00	0.00	0.00	0.87	0.13	1.00	0.00	1.00	0.00	0.00	0.00
Final Sat.:	1769	1862	0	0	1599	232	1769	0	1583	0	0	0
Capacity Analysis Module:												
Vol/Sat:	0.09	0.92	0.00	0.00	1.27	1.27	0.09	0.00	0.12	0.00	0.00	0.00
Crit Moves:	****				****				****			
Green/Cycle:	0.06	0.81	0.00	0.00	0.78	0.78	0.07	0.00	0.07	0.00	0.00	0.00
Volume/Cap:	1.63	1.13	0.00	0.00	1.63	1.63	1.21	0.00	1.63	0.00	0.00	0.00
Uniform Del:	84.9	17.0	0.0	0.0	19.6	19.6	83.5	0.0	83.5	0.0	0.0	0.0
IncremntDel:	322.1	67.6	0.0	0.0	285	284.6	145.6	0.0	317.7	0.0	0.0	0.0
InitQueuDel:	0.0	0.0	0.0	0.0	0.0	0.0	0.0	0.0	0.0	0.0	0.0	0.0
Delay Adj:	1.00	1.00	0.00	0.00	1.00	1.00	1.00	0.00	1.00	0.00	0.00	0.00
Delay/Veh:	407.0	84.5	0.0	0.0	304	304.2	229.1	0.0	401.3	0.0	0.0	0.0
User DelAdj:	1.00	1.00	1.00	1.00	1.00	1.00	1.00	1.00	1.00	1.00	1.00	1.00
AdjDel/Veh:	407.0	84.5	0.0	0.0	304	304.2	229.1	0.0	401.3	0.0	0.0	0.0
LOS by Move:	F	F	A	A	F	F	F	A	F	A	A	A
HCM2kAvgQ:	18	117	0	0	231	231	14	0	20	0	0	0

Level Of Service Computation Report
2000 HCM Operations Method (Future Volume Alternative)

Intersection #203 Mission Rd & Olive Hill Rd

Cycle (sec): 180 Critical Vol./Cap.(X): 1.246
Loss Time (sec): 16 Average Delay (sec/veh): 139.3
Optimal Cycle: OPTIMIZED Level Of Service: F

Street Name:	SR76						Olive Hill Rd					
Approach:	North Bound			South Bound			East Bound			West Bound		
Movement:	L -	T -	R	L -	T -	R	L -	T -	R	L -	T -	R
Control:	Protected			Protected			Protected			Protected		
Rights:	Include			Include			Include			Include		
Min. Green:	5	5	5	5	5	5	5	5	5	5	5	5
Y+R:	4.0	4.0	4.0	4.0	4.0	4.0	4.0	4.0	4.0	4.0	4.0	4.0
Lanes:	1	0 1	1 0	1	0 2	0 1	1	0 1	0 1	0	1 0	0 1
Volume Module:												
Base Vol:	133	1383	180	571	2008	189	177	260	209	113	173	316
Growth Adj:	1.00	1.00	1.00	1.00	1.00	1.00	1.00	1.00	1.00	1.00	1.00	1.00
Initial Bse:	133	1383	180	571	2008	189	177	260	209	113	173	316
Added Vol:	0	13	0	3	31	1	1	0	0	0	0	1
PasserByVol:	0	0	0	0	0	0	0	0	0	0	0	0
Initial Fut:	133	1396	180	574	2039	190	178	260	209	113	173	317
User Adj:	1.00	1.00	1.00	1.00	1.00	1.00	1.00	1.00	1.00	1.00	1.00	1.00
PHF Adj:	0.95	0.95	0.95	0.95	0.95	0.95	0.95	0.95	0.95	0.95	0.95	0.95
PHF Volume:	140	1469	189	604	2146	200	187	274	220	119	182	334
Reduct Vol:	0	0	0	0	0	0	0	0	0	0	0	0
Reduced Vol:	140	1469	189	604	2146	200	187	274	220	119	182	334
PCE Adj:	1.00	1.00	1.00	1.00	1.00	1.00	1.00	1.00	1.00	1.00	1.00	1.00
MLF Adj:	1.00	1.00	1.00	1.00	1.00	1.00	1.00	1.00	1.00	1.00	1.00	1.00
FinalVolume:	140	1469	189	604	2146	200	187	274	220	119	182	334
Saturation Flow Module:												
Sat/Lane:	1900	1900	1900	1900	1900	1900	1900	1900	1900	1900	1900	1900
Adjustment:	0.93	0.92	0.92	0.93	0.93	0.83	0.93	0.98	0.83	0.96	0.96	0.83
Lanes:	1.00	1.77	0.23	1.00	2.00	1.00	1.00	1.00	1.00	0.40	0.60	1.00
Final Sat.:	1769	3080	397	1769	3538	1583	1769	1862	1583	722	1105	1583
Capacity Analysis Module:												
Vol/Sat:	0.08	0.48	0.48	0.34	0.61	0.13	0.11	0.15	0.14	0.16	0.16	0.21
Crit Moves:		****		****			****					****
Green/Cycle:	0.08	0.38	0.38	0.27	0.58	0.58	0.09	0.12	0.12	0.13	0.17	0.17
Volume/Cap:	1.04	1.25	1.25	1.25	1.04	0.22	1.25	1.23	1.16	1.23	0.97	1.25
Uniform Del:	83.2	55.5	55.5	65.3	37.7	18.1	82.3	79.2	79.2	77.9	74.4	74.8
IncremntDel:	89.9	117	117.2	127.1	32.5	0.1	154.3	135	115.1	132.5	44.0	138.1
InitQueuDel:	0.0	0.0	0.0	0.0	0.0	0.0	0.0	0.0	0.0	0.0	0.0	0.0
Delay Adj:	1.00	1.00	1.00	1.00	1.00	1.00	1.00	1.00	1.00	1.00	1.00	1.00
Delay/Veh:	173.1	173	172.8	192.5	70.2	18.2	236.6	214	194.3	210.4	118	212.8
User DelAdj:	1.00	1.00	1.00	1.00	1.00	1.00	1.00	1.00	1.00	1.00	1.00	1.00
AdjDel/Veh:	173.1	173	172.8	192.5	70.2	18.2	236.6	214	194.3	210.4	118	212.8
LOS by Move:	F	F	F	F	E	B	F	F	F	F	F	F
HCM2kAvgQ:	12	69	69	49	72	5	17	23	18	26	21	28

Level Of Service Computation Report
2000 HCM Operations Method (Future Volume Alternative)

Intersection #204 SR76 & Mission Rd

Cycle (sec): 180 Critical Vol./Cap.(X): 1.325
Loss Time (sec): 12 Average Delay (sec/veh): 188.9
Optimal Cycle: OPTIMIZED Level Of Service: F

Street Name:	Mission Rd						SR76					
Approach:	North Bound			South Bound			East Bound			West Bound		
Movement:	L -	T -	R	L -	T -	R	L -	T -	R	L -	T -	R
Control:	Split Phase			Split Phase			Protected			Protected		
Rights:	Include			Include			Include			Include		
Min. Green:	5	5	5	5	5	5	5	5	5	5	5	5
Y+R:	4.0	4.0	4.0	4.0	4.0	4.0	4.0	4.0	4.0	4.0	4.0	4.0
Lanes:	0	0 0	0 0	2	0 0	0 2	2	0 1	0 0	0	0 2	0 1
Volume Module:												
Base Vol:	0	0	0	220	0	1072	775	1348	0	0	1962	189
Growth Adj:	1.00	1.00	1.00	1.00	1.00	1.00	1.00	1.00	1.00	1.00	1.00	1.00
Initial Bse:	0	0	0	220	0	1072	775	1348	0	0	1962	189
Added Vol:	0	0	0	1	0	0	0	14	0	0	35	1
PasserByVol:	0	0	0	0	0	0	0	0	0	0	0	0
Initial Fut:	0	0	0	221	0	1072	775	1362	0	0	1997	190
User Adj:	1.00	1.00	1.00	1.00	1.00	1.00	1.00	1.00	1.00	1.00	1.00	1.00
PHF Adj:	0.95	0.95	0.95	0.95	0.95	0.95	0.95	0.95	0.95	0.95	0.95	0.95
PHF Volume:	0	0	0	233	0	1128	816	1434	0	0	2102	200
Reduct Vol:	0	0	0	0	0	0	0	0	0	0	0	0
Reduced Vol:	0	0	0	233	0	1128	816	1434	0	0	2102	200
PCE Adj:	1.00	1.00	1.00	1.00	1.00	1.00	1.00	1.00	1.00	1.00	1.00	1.00
MLF Adj:	1.00	1.00	1.00	1.00	1.00	1.00	1.00	1.00	1.00	1.00	1.00	1.00
FinalVolume:	0	0	0	233	0	1128	816	1434	0	0	2102	200
Saturation Flow Module:												
Sat/Lane:	1900	1900	1900	1900	1900	1900	1900	1900	1900	1900	1900	1900
Adjustment:	1.00	1.00	1.00	1.00	1.00	0.73	0.90	0.98	1.00	1.00	0.93	0.83
Lanes:	0.00	0.00	0.00	2.00	0.00	2.00	2.00	1.00	0.00	0.00	2.00	1.00
Final Sat.:	0	0	0	3432	0	2786	3432	1862	0	0	3538	1583
Capacity Analysis Module:												
Vol/Sat:	0.00	0.00	0.00	0.07	0.00	0.41	0.24	0.77	0.00	0.00	0.59	0.13
Crit Moves:						****	****				****	
Green/Cycle:	0.00	0.00	0.00	0.31	0.00	0.31	0.18	0.60	0.00	0.00	0.45	0.45
Volume/Cap:	0.00	0.00	0.00	0.22	0.00	1.33	1.33	1.28	0.00	0.00	1.33	0.28
Uniform Del:	0.0	0.0	0.0	46.5	0.0	62.5	73.9	36.0	0.0	0.0	49.7	31.4
IncremntDel:	0.0	0.0	0.0	0.1	0.0	154.6	157.5	134	0.0	0.0	151	0.2
InitQueuDel:	0.0	0.0	0.0	0.0	0.0	0.0	0.0	0.0	0.0	0.0	0.0	0.0
Delay Adj:	0.00	0.00	0.00	1.00	0.00	1.00	1.00	1.00	0.00	0.00	1.00	1.00
Delay/Veh:	0.0	0.0	0.0	46.7	0.0	217.1	231.3	170	0.0	0.0	201	31.6
User DelAdj:	1.00	1.00	1.00	1.00	1.00	1.00	1.00	1.00	1.00	1.00	1.00	1.00
AdjDel/Veh:	0.0	0.0	0.0	46.7	0.0	217.1	231.3	170	0.0	0.0	201	31.6
LOS by Move:	A	A	A	D	A	F	F	F	A	A	F	C
HCM2kAvgQ:	0	0	0	5	0	55	37	115	0	0	93	7

Level Of Service Computation Report
2000 HCM Operations Method (Future Volume Alternative)

Intersection #205 SR76 & Gird Rd

Cycle (sec): 180 Critical Vol./Cap.(X): 1.470
Loss Time (sec): 12 Average Delay (sec/veh): 173.4
Optimal Cycle: OPTIMIZED Level Of Service: F

Street Name:	Gird Rd						SR76					
Approach:	North Bound			South Bound			East Bound			West Bound		
Movement:	L -	T -	R	L -	T -	R	L -	T -	R	L -	T -	R
Control:	Split Phase			Split Phase			Protected			Protected		
Rights:	Include			Include			Include			Include		
Min. Green:	5	5	5	5	5	5	5	5	5	5	5	5
Y+R:	4.0	4.0	4.0	4.0	4.0	4.0	4.0	4.0	4.0	4.0	4.0	4.0
Lanes:	0	0	0	0	0	1	0	0	0	1	0	1
Volume Module:PM Peak												
Base Vol:	0	0	0	104	0	203	129	1577	0	0	2011	73
Growth Adj:	1.00	1.00	1.00	1.00	1.00	1.00	1.00	1.00	1.00	1.00	1.00	1.00
Initial Bse:	0	0	0	104	0	203	129	1577	0	0	2011	73
Added Vol:	0	0	0	0	0	0	0	16	0	0	41	0
PasserByVol:	0	0	0	0	0	0	0	0	0	0	0	0
Initial Fut:	0	0	0	104	0	203	129	1593	0	0	2052	73
User Adj:	1.00	1.00	1.00	1.00	1.00	1.00	1.00	1.00	1.00	1.00	1.00	1.00
PHF Adj:	0.95	0.95	0.95	0.95	0.95	0.95	0.95	0.95	0.95	0.95	0.95	0.95
PHF Volume:	0	0	0	109	0	214	136	1677	0	0	2160	77
Reduct Vol:	0	0	0	0	0	0	0	0	0	0	0	0
Reduced Vol:	0	0	0	109	0	214	136	1677	0	0	2160	77
PCE Adj:	1.00	1.00	1.00	1.00	1.00	1.00	1.00	1.00	1.00	1.00	1.00	1.00
MLF Adj:	1.00	1.00	1.00	1.00	1.00	1.00	1.00	1.00	1.00	1.00	1.00	1.00
FinalVolume:	0	0	0	109	0	214	136	1677	0	0	2160	77
Saturation Flow Module:												
Sat/Lane:	1900	1900	1900	1900	1900	1900	1900	1900	1900	1900	1900	1900
Adjustment:	1.00	1.00	1.00	0.93	1.00	0.83	0.93	0.98	1.00	1.00	0.98	0.83
Lanes:	0.00	0.00	0.00	1.00	0.00	1.00	1.00	1.00	0.00	0.00	1.00	1.00
Final Sat.:	0	0	0	1769	0	1583	1769	1862	0	0	1862	1583
Capacity Analysis Module:												
Vol/Sat:	0.00	0.00	0.00	0.06	0.00	0.14	0.08	0.90	0.00	0.00	1.16	0.05
Crit Moves:						****	****				****	
Green/Cycle:	0.00	0.00	0.00	0.09	0.00	0.09	0.05	0.81	0.00	0.00	0.79	0.79
Volume/Cap:	0.00	0.00	0.00	0.67	0.00	1.47	1.47	1.11	0.00	0.00	1.47	0.06
Uniform Del:	0.0	0.0	0.0	79.1	0.0	81.7	85.3	16.8	0.0	0.0	19.0	4.2
IncremntDel:	0.0	0.0	0.0	10.6	0.0	244.9	260.8	58.2	0.0	0.0	215	0.0
InitQueuDel:	0.0	0.0	0.0	0.0	0.0	0.0	0.0	0.0	0.0	0.0	0.0	0.0
Delay Adj:	0.00	0.00	0.00	1.00	0.00	1.00	1.00	1.00	0.00	0.00	1.00	1.00
Delay/Veh:	0.0	0.0	0.0	89.7	0.0	326.6	346.1	75.0	0.0	0.0	234	4.2
User DelAdj:	1.00	1.00	1.00	1.00	1.00	1.00	1.00	1.00	1.00	1.00	1.00	1.00
AdjDel/Veh:	0.0	0.0	0.0	89.7	0.0	326.6	346.1	75.0	0.0	0.0	234	4.2
LOS by Move:	A	A	A	F	A	F	F	E	A	A	F	A
HCM2kAvgQ:	0	0	0	7	0	22	14	112	0	0	197	1

Level Of Service Computation Report
2000 HCM Operations Method (Future Volume Alternative)

Intersection #206 SR76 & Old Hwy 395

Cycle (sec): 175 Critical Vol./Cap.(X): 1.280
Loss Time (sec): 16 Average Delay (sec/veh): 162.7
Optimal Cycle: OPTIMIZED Level Of Service: F

Street Name:	Old Hwy 395						SR76					
Approach:	North Bound			South Bound			East Bound			West Bound		
Movement:	L -	T -	R	L -	T -	R	L -	T -	R	L -	T -	R
Control:	Split Phase			Split Phase			Protected			Protected		
Rights:	Include			Include			Include			Include		
Min. Green:	5	5	5	5	5	5	5	5	5	5	5	5
Y+R:	4.0	4.0	4.0	4.0	4.0	4.0	4.0	4.0	4.0	4.0	4.0	4.0
Lanes:	1	0	0	1	0	0	0	1!	0	0	1	0
Volume Module:PM Peak												
Base Vol:	311	184	182	554	212	119	116	979	109	128	593	230
Growth Adj:	1.00	1.00	1.00	1.00	1.00	1.00	1.00	1.00	1.00	1.00	1.00	1.00
Initial Bse:	311	184	182	554	212	119	116	979	109	128	593	230
Added Vol:	0	0	2	0	0	0	0	19	0	4	46	1
PasserByVol:	0	0	0	0	0	0	0	0	0	0	0	0
Initial Fut:	311	184	184	554	212	119	116	998	109	132	639	231
User Adj:	1.00	1.00	1.00	1.00	1.00	1.00	1.00	1.00	1.00	1.00	1.00	1.00
PHF Adj:	0.95	0.95	0.95	0.95	0.95	0.95	0.95	0.95	0.95	0.95	0.95	0.95
PHF Volume:	327	194	194	583	223	125	122	1051	115	139	673	243
Reduct Vol:	0	0	0	0	0	0	0	0	0	0	0	0
Reduced Vol:	327	194	194	583	223	125	122	1051	115	139	673	243
PCE Adj:	1.00	1.00	1.00	1.00	1.00	1.00	1.00	1.00	1.00	1.00	1.00	1.00
MLF Adj:	1.00	1.00	1.00	1.00	1.00	1.00	1.00	1.00	1.00	1.00	1.00	1.00
FinalVolume:	327	194	194	583	223	125	122	1051	115	139	673	243
Saturation Flow Module:												
Sat/Lane:	1900	1900	1900	1900	1900	1900	1900	1900	1900	1900	1900	1900
Adjustment:	0.93	0.91	0.91	0.93	0.93	0.93	0.93	0.92	0.92	0.93	0.93	0.83
Lanes:	1.00	0.50	0.50	0.63	0.24	0.13	1.00	1.80	0.20	1.00	2.00	1.00
Final Sat.:	1769	861	861	1110	425	238	1769	3142	343	1769	3538	1568
Capacity Analysis Module:												
Vol/Sat:	0.19	0.22	0.22	0.53	0.53	0.53	0.07	0.33	0.33	0.08	0.19	0.16
Crit Moves:		****		****				****		****		
Green/Cycle:	0.18	0.18	0.18	0.41	0.41	0.41	0.09	0.26	0.26	0.06	0.24	0.24
Volume/Cap:	1.05	1.28	1.28	1.28	1.28	1.28	0.80	1.28	1.28	1.28	0.80	0.66
Uniform Del:	72.1	72.1	72.1	51.6	51.6	51.6	78.5	64.6	64.6	82.1	63.0	60.3
IncremntDel:	65.8	149	149.0	136.5	136	136.5	25.7	135	134.5	179.3	5.7	4.2
InitQueuDel:	0.0	0.0	0.0	0.0	0.0	0.0	0.0	0.0	0.0	0.0	0.0	0.0
Delay Adj:	1.00	1.00	1.00	1.00	1.00	1.00	1.00	1.00	1.00	1.00	1.00	1.00
Delay/Veh:	137.9	221	221.2	188.1	188	188.1	104.2	199	199.2	261.5	68.6	64.6
User DelAdj:	1.00	1.00	1.00	1.00	1.00	1.00	1.00	1.00	1.00	1.00	1.00	1.00
AdjDel/Veh:	137.9	221	221.2	188.1	188	188.1	104.2	199	199.2	261.5	68.6	64.6
LOS by Move:	F	F	F	F	F	F	F	F	F	F	E	E
HCM2kAvgQ:	23	33	33	75	75	75	8	50	50	11	17	11

Level Of Service Computation Report
2000 HCM Operations Method (Future Volume Alternative)

Intersection #207 SR76 & I-15 SB Ramps

Cycle (sec): 180 Critical Vol./Cap.(X): 1.565
Loss Time (sec): 12 Average Delay (sec/veh): 221.1
Optimal Cycle: OPTIMIZED Level Of Service: F

Street Name:	I-15 SB Ramps						SR76					
Approach:	North Bound			South Bound			East Bound			West Bound		
Movement:	L -	T -	R	L -	T -	R	L -	T -	R	L -	T -	R
Control:	Split Phase			Split Phase			Protected			Protected		
Rights:	Include			Include			Include			Include		
Min. Green:	5	5	5	5	5	5	5	5	5	5	5	5
Y+R:	4.0	4.0	4.0	4.0	4.0	4.0	4.0	4.0	4.0	4.0	4.0	4.0
Lanes:	0	0	0	0	0	0	0	1	0	0	1	0
Volume Module:PM Peak												
Base Vol:	0	0	0	193	4	955	0	1045	405	274	744	0
Growth Adj:	1.00	1.00	1.00	1.00	1.00	1.00	1.00	1.00	1.00	1.00	1.00	1.00
Initial Bse:	0	0	0	193	4	955	0	1045	405	274	744	0
Added Vol:	0	0	0	4	0	0	0	20	0	101	51	0
PasserByVol:	0	0	0	0	0	0	0	0	0	0	0	0
Initial Fut:	0	0	0	197	4	955	0	1065	405	375	795	0
User Adj:	1.00	1.00	1.00	1.00	1.00	1.00	1.00	1.00	1.00	1.00	1.00	1.00
PHF Adj:	0.95	0.95	0.95	0.95	0.95	0.95	0.95	0.95	0.95	0.95	0.95	0.95
PHF Volume:	0	0	0	207	4	1005	0	1121	426	395	837	0
Reduct Vol:	0	0	0	0	0	0	0	0	0	0	0	0
Reduced Vol:	0	0	0	207	4	1005	0	1121	426	395	837	0
PCE Adj:	1.00	1.00	1.00	1.00	1.00	1.00	1.00	1.00	1.00	1.00	1.00	1.00
MLF Adj:	1.00	1.00	1.00	1.00	1.00	1.00	1.00	1.00	1.00	1.00	1.00	1.00
FinalVolume:	0	0	0	207	4	1005	0	1121	426	395	837	0
Saturation Flow Module:												
Sat/Lane:	1900	1900	1900	1900	1900	1900	1900	1900	1900	1900	1900	1900
Adjustment:	1.00	1.00	1.00	0.96	0.96	0.83	1.00	0.98	0.83	0.93	0.98	1.00
Lanes:	0.00	0.00	0.00	0.98	0.02	1.00	0.00	1.00	1.00	1.00	1.00	0.00
Final Sat.:	0	0	0	1779	36	1583	0	1862	1583	1769	1862	0
Capacity Analysis Module:												
Vol/Sat:	0.00	0.00	0.00	0.12	0.12	0.64	0.00	0.60	0.27	0.22	0.45	0.00
Crit Moves:						****		****		****		
Green/Cycle:	0.00	0.00	0.00	0.41	0.41	0.41	0.00	0.38	0.38	0.14	0.50	0.00
Volume/Cap:	0.00	0.00	0.00	0.29	0.29	1.56	0.00	1.56	0.70	1.56	0.90	0.00
Uniform Del:	0.0	0.0	0.0	36.0	36.0	53.5	0.0	55.4	46.6	77.2	41.4	0.0
IncremntDel:	0.0	0.0	0.0	0.2	0.2	261.7	0.0	261	3.6	272.5	12.2	0.0
InitQueuDel:	0.0	0.0	0.0	0.0	0.0	0.0	0.0	0.0	0.0	0.0	0.0	0.0
Delay Adj:	0.00	0.00	0.00	1.00	1.00	1.00	0.00	1.00	1.00	1.00	1.00	0.00
Delay/Veh:	0.0	0.0	0.0	36.2	36.2	315.1	0.0	316	50.2	349.7	53.6	0.0
User DelAdj:	1.00	1.00	1.00	1.00	1.00	1.00	1.00	1.00	1.00	1.00	1.00	1.00
AdjDel/Veh:	0.0	0.0	0.0	36.2	36.2	315.1	0.0	316	50.2	349.7	53.6	0.0
LOS by Move:	A	A	A	D	D	F	A	F	D	F	D	A
HCM2kAvgQ:	0	0	0	8	8	98	0	107	18	38	39	0

Level Of Service Computation Report
2000 HCM Operations Method (Future Volume Alternative)

Intersection #208 SR76 & I-15 NB Ramps

Cycle (sec): 160 Critical Vol./Cap.(X): 1.244
Loss Time (sec): 12 Average Delay (sec/veh): 127.7
Optimal Cycle: OPTIMIZED Level Of Service: F

Street Name:	I-15 NB Ramps						SR76					
Approach:	North Bound			South Bound			East Bound			West Bound		
Movement:	L -	T -	R	L -	T -	R	L -	T -	R	L -	T -	R
Control:	Split Phase			Split Phase			Protected			Protected		
Rights:	Include			Include			Include			Include		
Min. Green:	5	5	5	5	5	5	5	5	5	5	5	5
Y+R:	4.0	4.0	4.0	4.0	4.0	4.0	4.0	4.0	4.0	4.0	4.0	4.0
Lanes:	0	1	0	0	1	0	0	0	0	0	1	0
Volume Module:PM Peak												
Base Vol:	280	1	320	0	0	0	686	557	0	0	737	181
Growth Adj:	1.00	1.00	1.00	1.00	1.00	1.00	1.00	1.00	1.00	1.00	1.00	1.00
Initial Bse:	280	1	320	0	0	0	686	557	0	0	737	181
Added Vol:	0	0	41	0	0	0	0	24	0	0	152	10
PasserByVol:	0	0	0	0	0	0	0	0	0	0	0	0
Initial Fut:	280	1	361	0	0	0	686	581	0	0	889	191
User Adj:	1.00	1.00	1.00	1.00	1.00	1.00	1.00	1.00	1.00	1.00	1.00	1.00
PHF Adj:	0.95	0.95	0.95	0.95	0.95	0.95	0.95	0.95	0.95	0.95	0.95	0.95
PHF Volume:	295	1	380	0	0	0	722	612	0	0	936	201
Reduct Vol:	0	0	0	0	0	0	0	0	0	0	0	0
Reduced Vol:	295	1	380	0	0	0	722	612	0	0	936	201
PCE Adj:	1.00	1.00	1.00	1.00	1.00	1.00	1.00	1.00	1.00	1.00	1.00	1.00
MLF Adj:	1.00	1.00	1.00	1.00	1.00	1.00	1.00	1.00	1.00	1.00	1.00	1.00
FinalVolume:	295	1	380	0	0	0	722	612	0	0	936	201
Saturation Flow Module:												
Sat/Lane:	1900	1900	1900	1900	1900	1900	1900	1900	1900	1900	1900	1900
Adjustment:	0.92	0.92	0.83	1.00	1.00	1.00	0.93	0.98	1.00	1.00	0.98	0.83
Lanes:	0.99	0.01	1.00	0.00	0.00	0.00	1.00	1.00	0.00	0.00	1.00	1.00
Final Sat.:	1735	6	1583	0	0	0	1769	1862	0	0	1862	1583
Capacity Analysis Module:												
Vol/Sat:	0.17	0.17	0.24	0.00	0.00	0.00	0.41	0.33	0.00	0.00	0.50	0.13
Crit Moves:			****				****				****	
Green/Cycle:	0.19	0.19	0.19	0.00	0.00	0.00	0.33	0.67	0.00	0.00	0.40	0.40
Volume/Cap:	0.88	0.88	1.24	0.00	0.00	0.00	1.24	0.49	0.00	0.00	1.24	0.31
Uniform Del:	62.8	62.8	64.6	0.0	0.0	0.0	53.8	13.1	0.0	0.0	47.7	32.6
IncremntDel:	22.5	22.5	134.4	0.0	0.0	0.0	123.9	0.3	0.0	0.0	121	0.3
InitQueuDel:	0.0	0.0	0.0	0.0	0.0	0.0	0.0	0.0	0.0	0.0	0.0	0.0
Delay Adj:	1.00	1.00	1.00	0.00	0.00	0.00	1.00	1.00	0.00	0.00	1.00	1.00
Delay/Veh:	85.3	85.3	199.0	0.0	0.0	0.0	177.7	13.4	0.0	0.0	169	32.8
User DelAdj:	1.00	1.00	1.00	1.00	1.00	1.00	1.00	1.00	1.00	1.00	1.00	1.00
AdjDel/Veh:	85.3	85.3	199.0	0.0	0.0	0.0	177.7	13.4	0.0	0.0	169	32.8
LOS by Move:	F	F	F	A	A	A	F	B	A	A	F	C
HCM2kAvgQ:	17	17	30	0	0	0	50	14	0	0	69	7

Level Of Service Computation Report
2000 HCM Operations Method (Future Volume Alternative)

Intersection #209 SR76 & Pankey Rd

Cycle (sec): 100 | Critical Vol./Cap.(X): 0.476
Loss Time (sec): 0 | Average Delay (sec/veh): 22.0
Optimal Cycle: 43 | Level Of Service: C

Street Name:	Pankey Rd						SR76					
Approach:	North Bound			South Bound			East Bound			West Bound		
Movement:	L -	T -	R	L -	T -	R	L -	T -	R	L -	T -	R
Control:	Protected			Protected			Protected			Protected		
Rights:	Include			Include			Include			Include		
Min. Green:	5	5	5	5	5	5	5	5	5	5	5	5
Y+R:	4.0	4.0	4.0	4.0	4.0	4.0	4.0	4.0	4.0	4.0	4.0	4.0
Lanes:	1	0	2 0	1	1	0 1	1	0	2 0	1	1	0 1
Volume Module: >> Count Date: 25 Oct 2006 <<												
Base Vol:	117	248	58	24	165	55	140	701	151	74	604	67
Growth Adj:	1.00	1.00	1.00	1.00	1.00	1.00	1.00	1.00	1.00	1.00	1.00	1.00
Initial Bse:	117	248	58	24	165	55	140	701	151	74	604	67
Added Vol:	0	0	9	4	0	0	0	65	0	23	162	11
PasserByVol:	0	0	0	0	0	0	0	0	0	0	0	0
Initial Fut:	117	248	67	28	165	55	140	766	151	97	766	78
User Adj:	1.00	1.00	1.00	1.00	1.00	1.00	1.00	1.00	1.00	1.00	1.00	1.00
PHF Adj:	0.95	0.95	0.95	0.95	0.95	0.95	0.95	0.95	0.95	0.95	0.95	0.95
PHF Volume:	123	261	71	29	174	58	147	806	159	102	806	82
Reduct Vol:	0	0	0	0	0	0	0	0	0	0	0	0
Reduced Vol:	123	261	71	29	174	58	147	806	159	102	806	82
PCE Adj:	1.00	1.00	1.00	1.00	1.00	1.00	1.00	1.00	1.00	1.00	1.00	1.00
MLF Adj:	1.00	1.00	1.00	1.00	1.00	1.00	1.00	1.00	1.00	1.00	1.00	1.00
FinalVolume:	123	261	71	29	174	58	147	806	159	102	806	82
Saturation Flow Module:												
Sat/Lane:	1900	1900	1900	1900	1900	1900	1900	1900	1900	1900	1900	1900
Adjustment:	0.93	0.93	0.83	0.93	0.90	0.90	0.93	0.93	0.83	0.93	0.92	0.92
Lanes:	1.00	2.00	1.00	1.00	1.50	0.50	1.00	2.00	1.00	1.00	1.82	0.18
Final Sat.:	1769	3538	1583	1769	2555	852	1769	3538	1583	1769	3166	322
Capacity Analysis Module:												
Vol/Sat:	0.07	0.07	0.04	0.02	0.07	0.07	0.08	0.23	0.10	0.06	0.25	0.25
Crit Moves:	****				****		****				****	
Green/Cycle:	0.15	0.17	0.17	0.12	0.14	0.14	0.18	0.57	0.57	0.14	0.54	0.54
Volume/Cap:	0.48	0.43	0.26	0.14	0.48	0.48	0.48	0.40	0.18	0.40	0.48	0.48
Uniform Del:	39.2	37.0	35.8	39.7	39.4	39.4	37.1	12.1	10.4	38.9	14.5	14.5
IncremntDel:	1.4	0.5	0.5	0.3	0.7	0.7	1.2	0.1	0.1	1.0	0.2	0.2
InitQueuDel:	0.0	0.0	0.0	0.0	0.0	0.0	0.0	0.0	0.0	0.0	0.0	0.0
Delay Adj:	1.00	1.00	1.00	1.00	1.00	1.00	1.00	1.00	1.00	1.00	1.00	1.00
Delay/Veh:	40.5	37.5	36.3	40.0	40.1	40.1	38.3	12.3	10.5	40.0	14.7	14.7
User DelAdj:	1.00	1.00	1.00	1.00	1.00	1.00	1.00	1.00	1.00	1.00	1.00	1.00
AdjDel/Veh:	40.5	37.5	36.3	40.0	40.1	40.1	38.3	12.3	10.5	40.0	14.7	14.7
LOS by Move:	D	D	D	D	D	D	D	B	B	D	B	B
HCM2kAvgQ:	4	4	2	1	4	4	5	7	2	3	9	9

Level Of Service Computation Report
2000 HCM Operations Method (Future Volume Alternative)

Intersection #210 SR76 & Horse Ranch Creek Rd

Cycle (sec): 100 | Critical Vol./Cap.(X): 0.450
Loss Time (sec): 0 | Average Delay (sec/veh): 18.2
Optimal Cycle: 41 | Level Of Service: B

Street Name:	Horse Ranch Creek Rd						SR76					
Approach:	North Bound			South Bound			East Bound			West Bound		
Movement:	L -	T -	R	L -	T -	R	L -	T -	R	L -	T -	R
Control:	Protected			Protected			Protected			Protected		
Rights:	Include			Include			Include			Include		
Min. Green:	5	5	5	5	5	5	5	5	5	5	5	5
Y+R:	4.0	4.0	4.0	4.0	4.0	4.0	4.0	4.0	4.0	4.0	4.0	4.0
Lanes:	0	0	1! 0	0	1	0 1! 0	1	0	1 1	0	1	0 2 0 1
Volume Module:												
Base Vol:	0	0	0	85	0	219	232	552	0	0	572	72
Growth Adj:	1.00	1.00	1.00	1.00	1.00	1.00	1.00	1.00	1.00	1.00	1.00	1.00
Initial Bse:	0	0	0	85	0	219	232	552	0	0	572	72
Added Vol:	0	0	0	19	0	0	0	79	0	0	196	47
PasserByVol:	0	0	0	0	0	0	0	0	0	0	0	0
Initial Fut:	0	0	0	104	0	219	232	631	0	0	768	119
User Adj:	1.00	1.00	1.00	1.00	1.00	1.00	1.00	1.00	1.00	1.00	1.00	1.00
PHF Adj:	0.95	0.95	0.95	0.95	0.95	0.95	0.95	0.95	0.95	0.95	0.95	0.95
PHF Volume:	0	0	0	109	0	231	244	664	0	0	808	125
Reduct Vol:	0	0	0	0	0	0	0	0	0	0	0	0
Reduced Vol:	0	0	0	109	0	231	244	664	0	0	808	125
PCE Adj:	1.00	1.00	1.00	1.00	1.00	1.00	1.00	1.00	1.00	1.00	1.00	1.00
MLF Adj:	1.00	1.00	1.00	1.00	1.00	1.00	1.00	1.00	1.00	1.00	1.00	1.00
FinalVolume:	0	0	0	109	0	231	244	664	0	0	808	125
Saturation Flow Module:												
Sat/Lane:	1900	1900	1900	1900	1900	1900	1900	1900	1900	1900	1900	1900
Adjustment:	1.00	1.00	1.00	0.87	1.00	0.87	0.93	0.93	0.95	1.00	0.93	0.83
Lanes:	0.00	1.00	0.00	1.32	0.00	1.68	1.00	2.00	0.00	1.00	2.00	1.00
Final Sat.:	0	1900	0	2175	0	2761	1769	3538	0	1900	3538	1583
Capacity Analysis Module:												
Vol/Sat:	0.00	0.00	0.00	0.05	0.00	0.08	0.14	0.19	0.00	0.00	0.23	0.08
Crit Moves:						****	****				****	
Green/Cycle:	0.00	0.00	0.00	0.12	0.00	0.19	0.31	0.64	0.00	0.00	0.51	0.51
Volume/Cap:	0.00	0.00	0.00	0.43	0.00	0.45	0.45	0.29	0.00	0.00	0.45	0.16
Uniform Del:	0.0	0.0	0.0	40.9	0.0	36.2	27.9	7.8	0.0	0.0	15.7	13.2
IncremntDel:	0.0	0.0	0.0	0.4	0.0	0.4	0.6	0.1	0.0	0.0	0.2	0.1
InitQueuDel:	0.0	0.0	0.0	0.0	0.0	0.0	0.0	0.0	0.0	0.0	0.0	0.0
Delay Adj:	0.00	0.00	0.00	1.00	0.00	1.00	1.00	1.00	0.00	0.00	1.00	1.00
Delay/Veh:	0.0	0.0	0.0	41.3	0.0	36.6	28.5	7.9	0.0	0.0	15.9	13.2
User DelAdj:	1.00	1.00	1.00	1.00	1.00	1.00	1.00	1.00	1.00	1.00	1.00	1.00
AdjDel/Veh:	0.0	0.0	0.0	41.3	0.0	36.6	28.5	7.9	0.0	0.0	15.9	13.2
LOS by Move:	A	A	A	D	A	D	C	A	A	A	B	B
HCM2kAvgQ:	0	0	0	3	0	4	6	5	0	0	8	2

```
--------------------------------------------------------------------------------
--------------------------------------------------------------------------------
                      Level Of Service Computation Report
           2000 HCM Unsignalized Method (Future Volume Alternative)
********************************************************************************
Intersection #211 SR76 & Rice Cyn Rd
********************************************************************************
Average Delay (sec/veh):     50.6       Worst Case Level Of Service: F[465.8]
********************************************************************************
Street Name:           Rice Cyn Rd                          SR76
Approach:      North Bound      South Bound       East Bound       West Bound
Movement:     L  -  T  -  R    L  -  T  -  R    L  -  T  -  R    L  -  T  -  R
------------|---------------||---------------||---------------||---------------|
Control:        Stop Sign        Stop Sign       Uncontrolled     Uncontrolled
Rights:           Include          Include          Include          Include
Lanes:        0  0  0  0  0    0  0  1! 0  0    0  1  0  0  0    0  0  0  1  0
------------|---------------||---------------||---------------||---------------|
Volume Module: >> Count Date: 19 Oct 2006 <<
Base Vol:       0    0     0    77    0   138    55  943     0     0  450    40
Growth Adj:  1.00 1.00  1.00  1.00 1.00  1.00  1.00 1.00  1.00  1.00 1.00  1.00
Initial Bse:    0    0     0    77    0   138    55  943     0     0  450    40
Added Vol:      0    0     0     9    0     0     0   98     0     0  243    21
PasserByVol:    0    0     0     0    0     0     0    0     0     0    0     0
Initial Fut:    0    0     0    86    0   138    55 1041     0     0  693    61
User Adj:    1.00 1.00  1.00  1.00 1.00  1.00  1.00 1.00  1.00  1.00 1.00  1.00
PHF Adj:     0.95 0.95  0.95  0.95 0.95  0.95  0.95 0.95  0.95  0.95 0.95  0.95
PHF Volume:     0    0     0    91    0   145    58 1096     0     0  729    64
Reduct Vol:     0    0     0     0    0     0     0    0     0     0    0     0
FinalVolume:    0    0     0    91    0   145    58 1096     0     0  729    64
------------|---------------||---------------||---------------||---------------|
Critical Gap Module:
Critical Gp:xxxxx xxxx xxxxx   6.4  6.5   6.2   4.1 xxxx xxxxx xxxxx xxxx xxxxx
FollowUpTim:xxxxx xxxx xxxxx   3.5  4.0   3.3   2.2 xxxx xxxxx xxxxx xxxx xxxxx
------------|---------------||---------------||---------------||---------------|
Capacity Module:
Cnflict Vol: xxxx xxxx xxxxx  1993 1993   782   804 xxxx xxxxx  xxxx xxxx xxxxx
Potent Cap.: xxxx xxxx xxxxx    66   60   394   820 xxxx xxxxx  xxxx xxxx xxxxx
Move Cap.:   xxxx xxxx xxxxx    62   55   388   813 xxxx xxxxx  xxxx xxxx xxxxx
Volume/Cap:  xxxx xxxx  xxxx  1.47 0.00  0.37  0.07 xxxx  xxxx  xxxx xxxx  xxxx
------------|---------------||---------------||---------------||---------------|
Level Of Service Module:
2Way95thQ:   xxxx xxxx xxxxx  xxxx xxxx xxxxx   0.2 xxxx xxxxx  xxxx xxxx xxxxx
Control Del:xxxxx xxxx xxxxx xxxxx xxxx xxxxx   9.8 xxxx xxxxx xxxxx xxxx xxxxx
LOS by Move:    *    *     *     *    *     *     A    *     *     *    *     *
Movement:     LT - LTR - RT    LT - LTR - RT    LT - LTR - RT    LT - LTR - RT
Shared Cap.: xxxx xxxx xxxxx  xxxx  128 xxxxx  xxxx xxxx xxxxx  xxxx xxxx xxxxx
SharedQueue:xxxxx xxxx xxxxx xxxxx 18.3 xxxxx   0.2 xxxx xxxxx xxxxx xxxx xxxxx
Shrd ConDel:xxxxx xxxx xxxxx xxxxx  466 xxxxx   9.8 xxxx xxxxx xxxxx xxxx xxxxx
Shared LOS:     *    *     *     *    F     *     A    *     *     *    *     *
ApproachDel:    xxxxxx            465.8           xxxxxx           xxxxxx
ApproachLOS:         *              F                *                *
********************************************************************************
Note: Queue reported is the number of cars per lane.
********************************************************************************
```



```
--------------------------------------------------------------------------------
--------------------------------------------------------------------------------
                      Level Of Service Computation Report
           2000 HCM Unsignalized Method (Future Volume Alternative)
********************************************************************************
Intersection #212 SR76 & Couser Cyn Rd
********************************************************************************
Average Delay (sec/veh):     14.4       Worst Case Level Of Service: F[232.7]
********************************************************************************
Street Name:          Couser Cyn Rd                         SR76
Approach:      North Bound      South Bound       East Bound       West Bound
Movement:     L  -  T  -  R    L  -  T  -  R    L  -  T  -  R    L  -  T  -  R
------------|---------------||---------------||---------------||---------------|
Control:        Stop Sign        Stop Sign       Uncontrolled     Uncontrolled
Rights:           Include          Include          Include          Include
Lanes:        0  0  1! 0  0    0  0  1! 0  0    0  0  0  1  0    0  1  0  0  0
------------|---------------||---------------||---------------||---------------|
Volume Module:
Base Vol:      81    0    32     0    0     0     0  883    32    16  426     0
Growth Adj:  1.00 1.00  1.00  1.00 1.00  1.00  1.00 1.00  1.00  1.00 1.00  1.00
Initial Bse:   81    0    32     0    0     0     0  883    32    16  426     0
Added Vol:      0    0     0     0    0     0     0  106     0     1  264     0
PasserByVol:    0    0     0     0    0     0     0    0     0     0    0     0
Initial Fut:   81    0    32     0    0     0     0  989    32    17  690     0
User Adj:    1.00 1.00  1.00  1.00 1.00  1.00  1.00 1.00  1.00  1.00 1.00  1.00
PHF Adj:     0.95 0.95  0.95  0.95 0.95  0.95  0.95 0.95  0.95  0.95 0.95  0.95
PHF Volume:    85    0    34     0    0     0     0 1041    34    18  726     0
Reduct Vol:     0    0     0     0    0     0     0    0     0     0    0     0
FinalVolume:   85    0    34     0    0     0     0 1041    34    18  726     0
------------|---------------||---------------||---------------||---------------|
Critical Gap Module:
Critical Gp:  6.4  6.5   6.2   7.1  6.5   6.2 xxxxx xxxx xxxxx   4.1 xxxx xxxxx
FollowUpTim:  3.5  4.0   3.3   3.5  4.0   3.3 xxxxx xxxx xxxxx   2.2 xxxx xxxxx
------------|---------------||---------------||---------------||---------------|
Capacity Module:
Cnflict Vol: 1840 1840  1078  1857 1857   746  xxxx xxxx xxxxx  1085 xxxx xxxxx
Potent Cap.:   83   75   266    56   74   413  xxxx xxxx xxxxx   643 xxxx xxxxx
Move Cap.:     80   72   261    47   70   406  xxxx xxxx xxxxx   638 xxxx xxxxx
Volume/Cap:  1.07 0.00  0.13  0.00 0.00  0.00  xxxx xxxx  xxxx  0.03 xxxx  xxxx
------------|---------------||---------------||---------------||---------------|
Level Of Service Module:
2Way95thQ:   xxxx xxxx xxxxx  xxxx xxxx xxxxx  xxxx xxxx xxxxx   0.1 xxxx xxxxx
Control Del:xxxxx xxxx xxxxx xxxxx xxxx xxxxx xxxxx xxxx xxxxx  10.8 xxxx xxxxx
LOS by Move:    *    *     *     *    *     *     *    *     *     B    *     *
Movement:     LT - LTR - RT    LT - LTR - RT    LT - LTR - RT    LT - LTR - RT
Shared Cap.: xxxx   99 xxxxx  xxxx    0 xxxxx  xxxx xxxx xxxxx  xxxx xxxx xxxxx
SharedQueue:xxxxx  8.0 xxxxx xxxxx xxxx xxxxx xxxxx xxxx xxxxx   0.1 xxxx xxxxx
Shrd ConDel:xxxxx  233 xxxxx xxxxx xxxx xxxxx xxxxx xxxx xxxxx  10.8 xxxx xxxxx
Shared LOS:     *    F     *     *    *     *     *    *     *     B    *     *
ApproachDel:     232.7            xxxxxx           xxxxxx           xxxxxx
ApproachLOS:         F                *                *                *
********************************************************************************
Note: Queue reported is the number of cars per lane.
********************************************************************************
```

Level Of Service Computation Report
2000 HCM Operations Method (Future Volume Alternative)

Intersection #214 SR76 & C. Drwy

Cycle (sec): 90 | Critical Vol./Cap.(X): 0.751
Loss Time (sec): 12 | Average Delay (sec/veh): 17.8
Optimal Cycle: OPTIMIZED | Level Of Service: B

Street Name:	C. Drwy									SR76					
Approach:	North Bound			South Bound			East Bound			West Bound					
Movement:	L	- T	- R	L	- T	- R	L	- T	- R	L	- T	- R			
Control:	Protected			Protected			Permitted			Permitted					
Rights:	Include			Include			Include			Include					
Min. Green:	5	5	5	5	5	5	5	5	5	5	5	5			
Y+R:	4.0	4.0	4.0	4.0	4.0	4.0	4.0	4.0	4.0	4.0	4.0	4.0			
Lanes:	0	0	1! 0	0	1	0	0	0	1	1	0	1	0	0	0	1	0	1
Volume Module:															
Base Vol:	0	0	0	0	0	0	0	830	0	0	488	0			
Growth Adj:	1.00	1.00	1.00	1.00	1.00	1.00	1.00	1.00	1.00	1.00	1.00	1.00			
Initial Bse:	0	0	0	0	0	0	0	830	0	0	488	0			
Added Vol:	0	0	0	170	0	273	110	0	0	0	0	68			
PasserByVol:	0	0	0	0	0	0	0	0	0	0	0	0			
Initial Fut:	0	0	0	170	0	273	110	830	0	0	488	68			
User Adj:	1.00	1.00	1.00	1.00	1.00	1.00	1.00	1.00	1.00	1.00	1.00	1.00			
PHF Adj:	0.95	0.95	0.95	0.95	0.95	0.95	0.95	0.95	0.95	0.95	0.95	0.95			
PHF Volume:	0	0	0	179	0	287	116	874	0	0	514	72			
Reduct Vol:	0	0	0	0	0	0	0	0	0	0	0	0			
Reduced Vol:	0	0	0	179	0	287	116	874	0	0	514	72			
PCE Adj:	1.00	1.00	1.00	1.00	1.00	1.00	1.00	1.00	1.00	1.00	1.00	1.00			
MLF Adj:	1.00	1.00	1.00	1.00	1.00	1.00	1.00	1.00	1.00	1.00	1.00	1.00			
FinalVolume:	0	0	0	179	0	287	116	874	0	0	514	72			
Saturation Flow Module:															
Sat/Lane:	1900	1900	1900	1900	1900	1900	1900	1900	1900	1900	1900	1900			
Adjustment:	1.00	1.00	1.00	0.93	1.00	0.83	0.40	0.98	1.00	1.00	0.98	0.83			
Lanes:	0.00	1.00	0.00	1.00	0.00	1.00	1.00	1.00	0.00	0.00	1.00	1.00			
Final Sat.:	0	1900	0	1769	0	1583	758	1862	0	0	1862	1583			
Capacity Analysis Module:															
Vol/Sat:	0.00	0.00	0.00	0.10	0.00	0.18	0.15	0.47	0.00	0.00	0.28	0.05			
Crit Moves:						****		****							
Green/Cycle:	0.00	0.00	0.00	0.19	0.00	0.24	0.62	0.62	0.00	0.00	0.62	0.62			
Volume/Cap:	0.00	0.00	0.00	0.53	0.00	0.75	0.24	0.75	0.00	0.00	0.44	0.07			
Uniform Del:	0.0	0.0	0.0	32.7	0.0	31.6	7.5	11.9	0.0	0.0	8.7	6.6			
IncremntDel:	0.0	0.0	0.0	1.5	0.0	8.1	0.3	2.8	0.0	0.0	0.3	0.0			
InitQueuDel:	0.0	0.0	0.0	0.0	0.0	0.0	0.0	0.0	0.0	0.0	0.0	0.0			
Delay Adj:	0.00	0.00	0.00	1.00	0.00	1.00	1.00	1.00	0.00	0.00	1.00	1.00			
Delay/Veh:	0.0	0.0	0.0	34.2	0.0	39.7	7.7	14.7	0.0	0.0	9.0	6.7			
User DelAdj:	1.00	1.00	1.00	1.00	1.00	1.00	1.00	1.00	1.00	1.00	1.00	1.00			
AdjDel/Veh:	0.0	0.0	0.0	34.2	0.0	39.7	7.7	14.7	0.0	0.0	9.0	6.7			
LOS by Move:	A	A	A	C	A	D	A	B	A	A	A	A			
HCM2kAvgQ:	0	0	0	5	0	9	2	18	0	0	7	1			

Level Of Service Computation Report
2000 HCM Operations Method (Future Volume Alternative)

Intersection #216 SR76 & W. Pala Mission Rd

Cycle (sec): 90 | Critical Vol./Cap.(X): 0.577
Loss Time (sec): 12 | Average Delay (sec/veh): 25.3
Optimal Cycle: OPTIMIZED | Level Of Service: C

Street Name:	W. Pala Mission Rd									SR76					
Approach:	North Bound			South Bound			East Bound			West Bound					
Movement:	L	- T	- R	L	- T	- R	L	- T	- R	L	- T	- R			
Control:	Split Phase			Split Phase			Protected			Protected					
Rights:	Include			Include			Include			Include					
Min. Green:	5	5	5	5	5	5	5	5	5	5	5	5			
Y+R:	4.0	4.0	4.0	4.0	4.0	4.0	4.0	4.0	4.0	4.0	4.0	4.0			
Lanes:	1	0	0	1	0	0	1	0	0	1	1	0	1	0	0	1	0	
Volume Module:															
Base Vol:	32	12	5	27	20	140	206	405	50	16	281	34			
Growth Adj:	1.00	1.00	1.00	1.00	1.00	1.00	1.00	1.00	1.00	1.00	1.00	1.00			
Initial Bse:	32	12	5	27	20	140	206	405	50	16	281	34			
Added Vol:	25	0	0	0	0	29	71	35	63	0	14	0			
PasserByVol:	0	0	0	0	0	0	0	0	0	0	0	0			
Initial Fut:	57	12	5	27	20	169	277	440	113	16	295	34			
User Adj:	1.00	1.00	1.00	1.00	1.00	1.00	1.00	1.00	1.00	1.00	1.00	1.00			
PHF Adj:	0.95	0.95	0.95	0.95	0.95	0.95	0.95	0.95	0.95	0.95	0.95	0.95			
PHF Volume:	60	13	5	28	21	178	292	463	119	17	311	36			
Reduct Vol:	0	0	0	0	0	0	0	0	0	0	0	0			
Reduced Vol:	60	13	5	28	21	178	292	463	119	17	311	36			
PCE Adj:	1.00	1.00	1.00	1.00	1.00	1.00	1.00	1.00	1.00	1.00	1.00	1.00			
MLF Adj:	1.00	1.00	1.00	1.00	1.00	1.00	1.00	1.00	1.00	1.00	1.00	1.00			
FinalVolume:	60	13	5	28	21	178	292	463	119	17	311	36			
Saturation Flow Module:															
Sat/Lane:	1900	1900	1900	1900	1900	1900	1900	1900	1900	1900	1900	1900			
Adjustment:	0.93	0.94	0.94	0.95	0.95	0.83	0.93	0.90	0.90	0.93	0.97	0.97			
Lanes:	1.00	0.71	0.29	0.57	0.43	1.00	1.00	1.59	0.41	1.00	0.90	0.10			
Final Sat.:	1769	1257	524	1040	770	1583	1769	2728	701	1769	1645	190			
Capacity Analysis Module:															
Vol/Sat:	0.03	0.01	0.01	0.03	0.03	0.11	0.16	0.17	0.17	0.01	0.19	0.19			
Crit Moves:	****					****	****				****				
Green/Cycle:	0.06	0.06	0.06	0.19	0.19	0.19	0.29	0.46	0.46	0.15	0.33	0.33			
Volume/Cap:	0.58	0.17	0.17	0.14	0.14	0.58	0.58	0.37	0.37	0.06	0.58	0.58			
Uniform Del:	41.3	40.3	40.3	30.0	30.0	32.9	27.5	15.7	15.7	32.7	25.1	25.1			
IncremntDel:	7.8	0.8	0.8	0.2	0.2	2.7	1.7	0.1	0.1	0.1	1.4	1.4			
InitQueuDel:	0.0	0.0	0.0	0.0	0.0	0.0	0.0	0.0	0.0	0.0	0.0	0.0			
Delay Adj:	1.00	1.00	1.00	1.00	1.00	1.00	1.00	1.00	1.00	1.00	1.00	1.00			
Delay/Veh:	49.0	41.0	41.0	30.2	30.2	35.6	29.1	15.8	15.8	32.8	26.5	26.5			
User DelAdj:	1.00	1.00	1.00	1.00	1.00	1.00	1.00	1.00	1.00	1.00	1.00	1.00			
AdjDel/Veh:	49.0	41.0	41.0	30.2	30.2	35.6	29.1	15.8	15.8	32.8	26.5	26.5			
LOS by Move:	D	D	D	C	C	D	C	B	B	C	C	C			
HCM2kAvgQ:	3	1	1	1	1	5	8	6	6	0	8	8			

```
------------------------------------------------------------------------------
------------------------------------------------------------------------------
                       Level Of Service Computation Report
            2000 HCM 4-Way Stop Method (Future Volume Alternative)
******************************************************************************
Intersection #217 Pala Mission Rd & Pala Temecula Rd
******************************************************************************
Cycle (sec):         100                Critical Vol./Cap.(X):         0.683
Loss Time (sec):       0                Average Delay (sec/veh):        15.2
Optimal Cycle:         0                Level Of Service:                  C
******************************************************************************
Street Name:         Pala Temecula Rd                  Pala Mission Rd
Approach:      North Bound      South Bound       East Bound       West Bound
Movement:     L  -  T  -  R    L  -  T  -  R    L  -  T  -  R    L  -  T  -  R
------------|---------------||---------------||---------------||---------------|
Control:        Stop Sign        Stop Sign        Stop Sign        Stop Sign
Rights:           Include          Include          Include          Include
Min. Green:     5    5     5     5    5     5     5    5     5     5    5     5
Lanes:        0  0  0  1  0    0  0  1! 0  0    0  0  1! 0  0    0  0  1! 0  0
------------|---------------||---------------||---------------||---------------|
Volume Module:
Base Vol:       0    8    11   214   50   159   205   61     5     1   19   114
Growth Adj:  1.00 1.00  1.00  1.00 1.00  1.00  1.00 1.00  1.00  1.00 1.00  1.00
Initial Bse:    0    8    11   214   50   159   205   61     5     1   19   114
Added Vol:      0    0     0     0    0    22    55    0     0     0    0     0
PasserByVol:    0    0     0     0    0     0     0    0     0     0    0     0
Initial Fut:    0    8    11   214   50   181   260   61     5     1   19   114
User Adj:    1.00 1.00  1.00  1.00 1.00  1.00  1.00 1.00  1.00  1.00 1.00  1.00
PHF Adj:     0.95 0.95  0.95  0.95 0.95  0.95  0.95 0.95  0.95  0.95 0.95  0.95
PHF Volume:     0    8    12   225   53   191   274   64     5     1   20   120
Reduct Vol:     0    0     0     0    0     0     0    0     0     0    0     0
Reduced Vol:    0    8    12   225   53   191   274   64     5     1   20   120
PCE Adj:     1.00 1.00  1.00  1.00 1.00  1.00  1.00 1.00  1.00  1.00 1.00  1.00
MLF Adj:     1.00 1.00  1.00  1.00 1.00  1.00  1.00 1.00  1.00  1.00 1.00  1.00
FinalVolume:    0    8    12   225   53   191   274   64     5     1   20   120
------------|---------------||---------------||---------------||---------------|
Saturation Flow Module:
Adjustment:  1.00 1.00  1.00  1.00 1.00  1.00  1.00 1.00  1.00  1.00 1.00  1.00
Lanes:       0.00 0.42  0.58  0.48 0.11  0.41  0.80 0.19  0.01  0.01 0.14  0.85
Final Sat.:     0  234   322   330   77   279   494  116    10     5   89   535
------------|---------------||---------------||---------------||---------------|
Capacity Analysis Module:
Vol/Sat:     xxxx 0.04  0.04  0.68 0.68  0.68  0.55 0.55  0.55  0.22 0.22  0.22
Crit Moves:       ****       ****       ****                    ****
Delay/Veh:    0.0  8.8   8.8  17.6 17.6  17.6  14.7 14.7  14.7   9.6  9.6   9.6
Delay Adj:   1.00 1.00  1.00  1.00 1.00  1.00  1.00 1.00  1.00  1.00 1.00  1.00
AdjDel/Veh:   0.0  8.8   8.8  17.6 17.6  17.6  14.7 14.7  14.7   9.6  9.6   9.6
LOS by Move:    *    A     A     C    C     C     B    B     B     A    A     A
ApproachDel:       8.8             17.6             14.7              9.6
Delay Adj:        1.00             1.00             1.00             1.00
ApprAdjDel:        8.8             17.6             14.7              9.6
LOS by Appr:         A                C                B                A
AllWayAvgQ:   0.0  0.0   0.0   1.8  1.8   1.8   1.1  1.1   1.1   0.2  0.2   0.2
******************************************************************************
Note: Queue reported is the number of cars per lane.
******************************************************************************
```



```
------------------------------------------------------------------------------
------------------------------------------------------------------------------
                       Level Of Service Computation Report
            2000 HCM Unsignalized Method (Future Volume Alternative)
******************************************************************************
Intersection #218 SR76 & Brittain Rd
******************************************************************************
Average Delay (sec/veh):      0.1       Worst Case Level Of Service: B[ 11.0]
******************************************************************************
Street Name:           Brittain Rd                          SR76
Approach:      North Bound      South Bound       East Bound       West Bound
Movement:     L  -  T  -  R    L  -  T  -  R    L  -  T  -  R    L  -  T  -  R
------------|---------------||---------------||---------------||---------------|
Control:        Stop Sign        Stop Sign      Uncontrolled     Uncontrolled
Rights:           Include          Include          Include          Include
Lanes:        0  0  0  0  0    0  0  1! 0  0    0  1  0  0  0    0  0  0  1  0
------------|---------------||---------------||---------------||---------------|
Volume Module:
Base Vol:       0    0     0     1    0     5     5  436     0     0  293     1
Growth Adj:  1.00 1.00  1.00  1.00 1.00  1.00  1.00 1.00  1.00  1.00 1.00  1.00
Initial Bse:    0    0     0     1    0     5     5  436     0     0  293     1
Added Vol:      0    0     0     0    0     0     0   35     0     0   14     0
PasserByVol:    0    0     0     0    0     0     0    0     0     0    0     0
Initial Fut:    0    0     0     1    0     5     5  471     0     0  307     1
User Adj:    1.00 1.00  1.00  1.00 1.00  1.00  1.00 1.00  1.00  1.00 1.00  1.00
PHF Adj:     0.95 0.95  0.95  0.95 0.95  0.95  0.95 0.95  0.95  0.95 0.95  0.95
PHF Volume:     0    0     0     1    0     5     5  496     0     0  323     1
Reduct Vol:     0    0     0     0    0     0     0    0     0     0    0     0
FinalVolume:    0    0     0     1    0     5     5  496     0     0  323     1
------------|---------------||---------------||---------------||---------------|
Critical Gap Module:
Critical Gp:xxxxx xxxx xxxxx   6.4  6.5   6.2   4.1 xxxx xxxxx xxxxx xxxx xxxxx
FollowUpTim:xxxxx xxxx xxxxx   3.5  4.0   3.3   2.2 xxxx xxxxx xxxxx xxxx xxxxx
------------|---------------||---------------||---------------||---------------|
Capacity Module:
Cnflict Vol: xxxx xxxx xxxxx   830  830   324   324 xxxx xxxxx  xxxx xxxx xxxxx
Potent Cap.: xxxx xxxx xxxxx   340  306   717  1236 xxxx xxxxx  xxxx xxxx xxxxx
Move Cap.:   xxxx xxxx xxxxx   339  304   717  1236 xxxx xxxxx  xxxx xxxx xxxxx
Volume/Cap:  xxxx xxxx  xxxx  0.00 0.00  0.01  0.00 xxxx  xxxx  xxxx xxxx  xxxx
------------|---------------||---------------||---------------||---------------|
Level Of Service Module:
2Way95thQ:   xxxx xxxx xxxxx  xxxx xxxx xxxxx   0.0 xxxx xxxxx  xxxx xxxx xxxxx
Control Del:xxxxx xxxx xxxxx xxxxx xxxx xxxxx   7.9 xxxx xxxxx xxxxx xxxx xxxxx
LOS by Move:    *    *     *     *    *     *     A     *     *     *    *     *
Movement:     LT - LTR - RT    LT - LTR - RT    LT - LTR - RT    LT - LTR - RT
Shared Cap.: xxxx xxxx xxxxx  xxxx  605 xxxxx  xxxx xxxx xxxxx  xxxx xxxx xxxxx
SharedQueue:xxxxx xxxx xxxxx xxxxx  0.0 xxxxx   0.0 xxxx xxxxx xxxxx xxxx xxxxx
Shrd ConDel:xxxxx xxxx xxxxx xxxxx 11.0 xxxxx   7.9 xxxx xxxxx xxxxx xxxx xxxxx
Shared LOS:     *    *     *     *    B     *     A     *     *     *    *     *
ApproachDel:    xxxxxx             11.0            xxxxxx            xxxxxx
ApproachLOS:         *                B                 *                 *
******************************************************************************
Note: Queue reported is the number of cars per lane.
******************************************************************************
```

```
------------------------------------------------------------------------------
------------------------------------------------------------------------------
                       Level Of Service Computation Report
           2000 HCM Unsignalized Method (Future Volume Alternative)
******************************************************************************
Intersection #219 SR76 & E. Pala Mission Rd
******************************************************************************
Average Delay (sec/veh):      6.9       Worst Case Level Of Service: E[ 39.5]
******************************************************************************
Street Name:         E. Pala Mission Rd                     SR76
Approach:      North Bound      South Bound       East Bound       West Bound
Movement:     L  -  T  -  R    L  -  T  -  R    L  -  T  -  R    L  -  T  -  R
------------|---------------||---------------||---------------||---------------|
Control:        Stop Sign        Stop Sign       Uncontrolled     Uncontrolled
Rights:           Include          Include          Include          Include
Lanes:        0  0  0  0  0    0  0  1! 0  0    0  1  0  0  0    0  0  0  1  0
------------|---------------||---------------||---------------||---------------|
Volume Module:
Base Vol:       0    0     0   189    0     4     8  436     0     0  278   149
Growth Adj:  1.00 1.00  1.00  1.00 1.00  1.00  1.00 1.00  1.00  1.00 1.00  1.00
Initial Bse:    0    0     0   189    0     4     8  436     0     0  278   149
Added Vol:      0    0     0     0    0     0     0   35     0     0   14     0
PasserByVol:    0    0     0     0    0     0     0    0     0     0    0     0
Initial Fut:    0    0     0   189    0     4     8  471     0     0  292   149
User Adj:    1.00 1.00  1.00  1.00 1.00  1.00  1.00 1.00  1.00  1.00 1.00  1.00
PHF Adj:     0.95 0.95  0.95  0.95 0.95  0.95  0.95 0.95  0.95  0.95 0.95  0.95
PHF Volume:     0    0     0   199    0     4     8  496     0     0  307   157
Reduct Vol:     0    0     0     0    0     0     0    0     0     0    0     0
FinalVolume:    0    0     0   199    0     4     8  496     0     0  307   157
------------|---------------||---------------||---------------||---------------|
Critical Gap Module:
Critical Gp:xxxxx xxxx xxxxx   6.4  6.5   6.2   4.1 xxxx xxxxx xxxxx xxxx xxxxx
FollowUpTim:xxxxx xxxx xxxxx   3.5  4.0   3.3   2.2 xxxx xxxxx xxxxx xxxx xxxxx
------------|---------------||---------------||---------------||---------------|
Capacity Module:
Cnflict Vol: xxxx xxxx xxxxx   918  918   406   474 xxxx xxxxx  xxxx xxxx xxxxx
Potent Cap.: xxxx xxxx xxxxx   301  271   645  1088 xxxx xxxxx  xxxx xxxx xxxxx
Move Cap.:   xxxx xxxx xxxxx   295  265   634  1079 xxxx xxxxx  xxxx xxxx xxxxx
Volume/Cap:  xxxx xxxx  xxxx  0.68 0.00  0.01  0.01 xxxx  xxxx  xxxx xxxx  xxxx
------------|---------------||---------------||---------------||---------------|
Level Of Service Module:
2Way95thQ:   xxxx xxxx xxxxx  xxxx xxxx xxxxx   0.0 xxxx xxxxx  xxxx xxxx xxxxx
Control Del:xxxxx xxxx xxxxx xxxxx xxxx xxxxx   8.4 xxxx xxxxx xxxxx xxxx xxxxx
LOS by Move:    *    *     *     *    *     *     A     *     *     *     *     *
Movement:     LT - LTR - RT    LT - LTR - RT    LT - LTR - RT    LT - LTR - RT
Shared Cap.: xxxx xxxx xxxxx  xxxx  298 xxxxx  xxxx xxxx xxxxx  xxxx xxxx xxxxx
SharedQueue:xxxxx xxxx xxxxx xxxxx  4.6 xxxxx   0.0 xxxx xxxxx xxxxx xxxx xxxxx
Shrd ConDel:xxxxx xxxx xxxxx xxxxx 39.5 xxxxx   8.4 xxxx xxxxx xxxxx xxxx xxxxx
Shared LOS:     *    *     *     *    E     *     A     *     *     *     *     *
ApproachDel:    xxxxxx             39.5           xxxxxx           xxxxxx
ApproachLOS:         *                E                *                *
******************************************************************************
Note: Queue reported is the number of cars per lane.
******************************************************************************
```



```
------------------------------------------------------------------------------
------------------------------------------------------------------------------
                       Level Of Service Computation Report
           2000 HCM Unsignalized Method (Future Volume Alternative)
******************************************************************************
Intersection #220 SR76 & Lilac Rd
******************************************************************************
Average Delay (sec/veh):      2.7       Worst Case Level Of Service: D[ 28.5]
******************************************************************************
Street Name:             Lilac Rd                           SR76
Approach:      North Bound      South Bound       East Bound       West Bound
Movement:     L  -  T  -  R    L  -  T  -  R    L  -  T  -  R    L  -  T  -  R
------------|---------------||---------------||---------------||---------------|
Control:        Stop Sign        Stop Sign       Uncontrolled     Uncontrolled
Rights:           Include          Include          Include          Include
Lanes:        0  0  1! 0  0    0  0  0  0  0    0  0  0  1  0    0  1  0  0  0
------------|---------------||---------------||---------------||---------------|
Volume Module:
Base Vol:      81    0    20     0    0     0     0  578    39    10  374     0
Growth Adj:  1.00 1.00  1.00  1.00 1.00  1.00  1.00 1.00  1.00  1.00 1.00  1.00
Initial Bse:   81    0    20     0    0     0     0  578    39    10  374     0
Added Vol:      5    0     0     0    0     0     0   23    12     0    9     0
PasserByVol:    0    0     0     0    0     0     0    0     0     0    0     0
Initial Fut:   86    0    20     0    0     0     0  601    51    10  383     0
User Adj:    1.00 1.00  1.00  1.00 1.00  1.00  1.00 1.00  1.00  1.00 1.00  1.00
PHF Adj:     0.95 0.95  0.95  0.95 0.95  0.95  0.95 0.95  0.95  0.95 0.95  0.95
PHF Volume:    91    0    21     0    0     0     0  633    54    11  403     0
Reduct Vol:     0    0     0     0    0     0     0    0     0     0    0     0
FinalVolume:   91    0    21     0    0     0     0  633    54    11  403     0
------------|---------------||---------------||---------------||---------------|
Critical Gap Module:
Critical Gp:  6.4  6.5   6.2 xxxxx xxxx xxxxx xxxxx xxxx xxxxx   4.1 xxxx xxxxx
FollowUpTim:  3.5  4.0   3.3 xxxxx xxxx xxxxx xxxxx xxxx xxxxx   2.2 xxxx xxxxx
------------|---------------||---------------||---------------||---------------|
Capacity Module:
Cnflict Vol: 1084 1084   659  xxxx xxxx xxxxx  xxxx xxxx xxxxx   686 xxxx xxxxx
Potent Cap.:  240  217   463  xxxx xxxx xxxxx  xxxx xxxx xxxxx   907 xxxx xxxxx
Move Cap.:    238  214   463  xxxx xxxx xxxxx  xxxx xxxx xxxxx   907 xxxx xxxxx
Volume/Cap:  0.38 0.00  0.05  xxxx xxxx  xxxx  xxxx xxxx  xxxx  0.01 xxxx  xxxx
------------|---------------||---------------||---------------||---------------|
Level Of Service Module:
2Way95thQ:   xxxx xxxx xxxxx  xxxx xxxx xxxxx  xxxx xxxx xxxxx   0.0 xxxx xxxxx
Control Del:xxxxx xxxx xxxxx xxxxx xxxx xxxxx xxxxx xxxx xxxxx   9.0 xxxx xxxxx
LOS by Move:    *    *     *     *    *     *     *     *     *     A     *     *
Movement:     LT - LTR - RT    LT - LTR - RT    LT - LTR - RT    LT - LTR - RT
Shared Cap.: xxxx  262 xxxxx  xxxx xxxx xxxxx  xxxx xxxx xxxxx  xxxx xxxx xxxxx
SharedQueue:xxxxx  2.0 xxxxx xxxxx xxxx xxxxx xxxxx xxxx xxxxx   0.0 xxxx xxxxx
Shrd ConDel:xxxxx 28.5 xxxxx xxxxx xxxx xxxxx xxxxx xxxx xxxxx   9.0 xxxx xxxxx
Shared LOS:     *    D     *     *    *     *     *     *     *     A     *     *
ApproachDel:     28.5           xxxxxx           xxxxxx           xxxxxx
ApproachLOS:         D                *                *                *
******************************************************************************
Note: Queue reported is the number of cars per lane.
******************************************************************************
```

```
------------------------------------------------------------------------------
------------------------------------------------------------------------------
                      Level Of Service Computation Report
           2000 HCM Unsignalized Method (Future Volume Alternative)
******************************************************************************
Intersection #221 SR76 & Adams Dr
******************************************************************************
Average Delay (sec/veh):      0.6       Worst Case Level Of Service: B[ 14.2]
******************************************************************************
Street Name:             Adams Dr                          SR76
Approach:      North Bound      South Bound       East Bound       West Bound
Movement:     L  -  T  -  R    L  -  T  -  R    L  -  T  -  R    L  -  T  -  R
------------|---------------||---------------||---------------||---------------|
Control:        Stop Sign        Stop Sign       Uncontrolled     Uncontrolled
Rights:           Include          Include          Include          Include
Lanes:        0  0  1! 0  0    0  0  1! 0  0    0  1  0  0  0    0  0  0  1  0
------------|---------------||---------------||---------------||---------------|
Volume Module:
Base Vol:       0    0     0    11    0    27    10  584     0     0  387     5
Growth Adj:  1.00 1.00  1.00  1.00 1.00  1.00  1.00 1.00  1.00  1.00 1.00  1.00
Initial Bse:    0    0     0    11    0    27    10  584     0     0  387     5
Added Vol:      0    0     0     0    0     0     0   22     0     0    9     0
PasserByVol:    0    0     0     0    0     0     0    0     0     0    0     0
Initial Fut:    0    0     0    11    0    27    10  606     0     0  396     5
User Adj:    1.00 1.00  1.00  1.00 1.00  1.00  1.00 1.00  1.00  1.00 1.00  1.00
PHF Adj:     0.95 0.95  0.95  0.95 0.95  0.95  0.95 0.95  0.95  0.95 0.95  0.95
PHF Volume:     0    0     0    12    0    28    11  638     0     0  417     5
Reduct Vol:     0    0     0     0    0     0     0    0     0     0    0     0
FinalVolume:    0    0     0    12    0    28    11  638     0     0  417     5
------------|---------------||---------------||---------------||---------------|
Critical Gap Module:
Critical Gp:  7.1  6.5   6.2   6.4  6.5   6.2   4.1 xxxx xxxxx xxxxx xxxx xxxxx
FollowUpTim:  3.5  4.0   3.3   3.5  4.0   3.3   2.2 xxxx xxxxx xxxxx xxxx xxxxx
------------|---------------||---------------||---------------||---------------|
Capacity Module:
Cnflict Vol: 1093 1081   638  1078 1078   419   422 xxxx xxxxx  xxxx xxxx xxxxx
Potent Cap.:  192  218   477   242  219   634  1137 xxxx xxxxx  xxxx xxxx xxxxx
Move Cap.:    182  216   477   240  216   634  1137 xxxx xxxxx  xxxx xxxx xxxxx
Volume/Cap:  0.00 0.00  0.00  0.05 0.00  0.04  0.01 xxxx  xxxx  xxxx xxxx  xxxx
------------|---------------||---------------||---------------||---------------|
Level Of Service Module:
2Way95thQ:   xxxx xxxx xxxxx  xxxx xxxx xxxxx   0.0 xxxx xxxxx  xxxx xxxx xxxxx
Control Del:xxxxx xxxx xxxxx xxxxx xxxx xxxxx   8.2 xxxx xxxxx xxxxx xxxx xxxxx
LOS by Move:    *    *     *     *    *     *     A    *     *     *    *     *
Movement:     LT - LTR - RT    LT - LTR - RT    LT - LTR - RT    LT - LTR - RT
Shared Cap.: xxxx    0 xxxxx  xxxx  430 xxxxx  xxxx xxxx xxxxx  xxxx xxxx xxxxx
SharedQueue:xxxxx xxxx xxxxx xxxxx  0.3 xxxxx   0.0 xxxx xxxxx xxxxx xxxx xxxxx
Shrd ConDel:xxxxx xxxx xxxxx xxxxx 14.2 xxxxx   8.2 xxxx xxxxx xxxxx xxxx xxxxx
Shared LOS:     *    *     *     *    B     *     A    *     *     *    *     *
ApproachDel:    xxxxxx             14.2           xxxxxx           xxxxxx
ApproachLOS:         *                B                *                *
******************************************************************************
Note: Queue reported is the number of cars per lane.
******************************************************************************
```



```
------------------------------------------------------------------------------
------------------------------------------------------------------------------
                      Level Of Service Computation Report
           2000 HCM Unsignalized Method (Future Volume Alternative)
******************************************************************************
Intersection #222 SR76 & Cole Grade Rd
******************************************************************************
Average Delay (sec/veh):     67.2       Worst Case Level Of Service: F[307.2]
******************************************************************************
Street Name:          Cole Grade Rd                        SR76
Approach:      North Bound      South Bound       East Bound       West Bound
Movement:     L  -  T  -  R    L  -  T  -  R    L  -  T  -  R    L  -  T  -  R
------------|---------------||---------------||---------------||---------------|
Control:        Stop Sign        Stop Sign       Uncontrolled     Uncontrolled
Rights:           Include          Include          Include          Include
Lanes:        0  0  1! 0  0    0  0  0  1  0    0  0  1! 0  0    0  0  1! 0  0
------------|---------------||---------------||---------------||---------------|
Volume Module:
Base Vol:     193    0   102     0    2     3     2  507   131    75  333     3
Growth Adj:  1.00 1.00  1.00  1.00 1.00  1.00  1.00 1.00  1.00  1.00 1.00  1.00
Initial Bse:  193    0   102     0    2     3     2  507   131    75  333     3
Added Vol:      1    0     0     0    0     1     3    5     2     0    2     0
PasserByVol:    0    0     0     0    0     0     0    0     0     0    0     0
Initial Fut:  194    0   102     0    2     4     5  512   133    75  335     3
User Adj:    1.00 1.00  1.00  1.00 1.00  1.00  1.00 1.00  1.00  1.00 1.00  1.00
PHF Adj:     0.95 0.95  0.95  0.95 0.95  0.95  0.95 0.95  0.95  0.95 0.95  0.95
PHF Volume:   204    0   107     0    2     4     5  539   140    79  353     3
Reduct Vol:     0    0     0     0    0     0     0    0     0     0    0     0
FinalVolume:  204    0   107     0    2     4     5  539   140    79  353     3
------------|---------------||---------------||---------------||---------------|
Critical Gap Module:
Critical Gp:  7.1  6.5   6.2 xxxxx  6.5   6.2   4.1 xxxx xxxxx   4.1 xxxx xxxxx
FollowUpTim:  3.5  4.0   3.3 xxxxx  4.0   3.3   2.2 xxxx xxxxx   2.2 xxxx xxxxx
------------|---------------||---------------||---------------||---------------|
Capacity Module:
Cnflict Vol: 1155 1153   629  xxxx 1222   374   366 xxxx xxxxx   689 xxxx xxxxx
Potent Cap.:  174  197   482  xxxx  180   672  1193 xxxx xxxxx   905 xxxx xxxxx
Move Cap.:    156  175   474  xxxx  160   661  1183 xxxx xxxxx   898 xxxx xxxxx
Volume/Cap:  1.31 0.00  0.23  xxxx 0.01  0.01  0.00 xxxx  xxxx  0.09 xxxx  xxxx
------------|---------------||---------------||---------------||---------------|
Level Of Service Module:
2Way95thQ:   xxxx xxxx xxxxx  xxxx xxxx xxxxx   0.0 xxxx xxxxx   0.3 xxxx xxxxx
Control Del:xxxxx xxxx xxxxx xxxxx xxxx xxxxx   8.1 xxxx xxxxx   9.4 xxxx xxxxx
LOS by Move:    *    *     *     *    *     *     A    *     *     A    *     *
Movement:     LT - LTR - RT    LT - LTR - RT    LT - LTR - RT    LT - LTR - RT
Shared Cap.: xxxx  203 xxxxx  xxxx xxxx   323  xxxx xxxx xxxxx  xxxx xxxx xxxxx
SharedQueue:xxxxx 19.6 xxxxx xxxxx xxxx   0.1 xxxxx xxxx xxxxx xxxxx xxxx xxxxx
Shrd ConDel:xxxxx  307 xxxxx xxxxx xxxx  16.4 xxxxx xxxx xxxxx xxxxx xxxx xxxxx
Shared LOS:     *    F     *     *    *     C     *    *     *     *    *     *
ApproachDel:     307.2             16.4           xxxxxx           xxxxxx
ApproachLOS:         F                C                *                *
******************************************************************************
Note: Queue reported is the number of cars per lane.
******************************************************************************
```

Scenario Report

Scenario:	Ex PM + Proj + Cum
Command:	Default Command
Volume:	Ex PM + Cum
Geometry:	Cumulative
Impact Fee:	Default Impact Fee
Trip Generation:	PM
Trip Distribution:	Project
Paths:	Default Path
Routes:	Default Route
Configuration:	Default Configuration

Impact Analysis Report
Level Of Service

Intersection	Base LOS	Base Del/ Veh	Base V/ C	Future LOS	Future Del/ Veh	Future V/ C	Change in
#201 SR76 & Vista Way	F	248.2	1.458	F	253.9	1.471	+ 5.691 D/V
#202 Mission Ave & River Rd	F	310.1	1.597	F	318.4	1.619	+ 8.256 D/V
#203 Mission Rd & Olive Hill Rd	F	206.5	1.539	F	211.1	1.556	+ 4.667 D/V
#204 SR76 & Mission Rd	F	283.8	1.865	F	290.7	1.891	+ 6.866 D/V
#205 SR76 & Gird Rd	F	241.7	1.608	F	251.7	1.637	+ 9.995 D/V
#206 SR76 & Old Hwy 395	F	240.0	1.566	F	246.5	1.589	+ 6.492 D/V
#207 SR76 & I-15 SB Ramps	F	335.5	1.973	F	357.9	2.043	+22.354 D/V
#208 SR76 & I-15 NB Ramps	F	240.0	1.604	F	272.9	1.739	+32.918 D/V
#209 SR76 & Pankey Rd	C	31.8	0.790	C	33.2	0.818	+ 1.458 D/V
#210 SR76 & Horse Ranch Creek Rd	C	20.5	0.548	B	19.7	0.583	-0.842 D/V
#211 SR76 & Rice Cyn Rd	F	531.2	1.463	F	OVRFL	4.726	+1625.448 D/
#212 SR76 & Couser Cyn Rd	F	297.6	1.149	F	933.8	2.341	+636.254 D/V
#214 SR76 & C. Drwy	A	2.3	0.605	B	19.3	0.985	+17.091 D/V
#216 SR76 & W. Pala Mission Rd	C	25.0	0.689	D	35.5	0.858	+10.447 D/V
#217 Pala Mission Rd & Pala Temecul	C	17.3	0.719	C	22.5	0.837	+ 0.118 V/C
#218 SR76 & Brittain Rd	C	19.3	0.006	C	20.5	0.006	+ 1.212 D/V
#219 SR76 & E. Pala Mission Rd	F	512.9	1.945	F	600.1	2.130	+87.126 D/V
#220 SR76 & Lilac Rd	F	93.0	0.635	F	167.6	0.899	+74.653 D/V
#221 SR76 & Adams Dr	D	32.3	0.112	D	33.9	0.119	+ 1.690 D/V
#222 SR76 & Cole Grade Rd	F	967.0	2.661	F	OVRFL	2.788	+60.353 D/V

Level Of Service Computation Report
2000 HCM Operations Method (Future Volume Alternative)

Intersection #201 SR76 & Vista Way

Cycle (sec): 180 Critical Vol./Cap.(X): 1.471
Loss Time (sec): 16 Average Delay (sec/veh): 253.9
Optimal Cycle: OPTIMIZED Level Of Service: F

Street Name:	SR76						Vista Way					
Approach:	North Bound			South Bound			East Bound			West Bound		
Movement:	L - T - R			L - T - R			L - T - R			L - T - R		
Control:	Protected			Protected			Protected			Protected		
Rights:	Include			Include			Include			Include		
Min. Green:	5	5	5	5	5	5	5	5	5	5	5	5
Y+R:	4.0	4.0	4.0	4.0	4.0	4.0	4.0	4.0	4.0	4.0	4.0	4.0
Lanes:	1	0	1 1	0	2	0	0 1	0	0	0 1!	0	0
Volume Module:												
Base Vol:	122	2002	425	521	1475	35	11	68	83	349	82	452
Growth Adj:	1.00	1.00	1.00	1.00	1.00	1.00	1.00	1.00	1.00	1.00	1.00	1.00
Initial Bse:	122	2002	425	521	1475	35	11	68	83	349	82	452
Added Vol:	2	22	0	3	10	0	0	1	1	0	2	6
PasserByVol:	0	0	0	0	0	0	0	0	0	0	0	0
Initial Fut:	124	2024	425	524	1485	35	11	69	84	349	84	458
User Adj:	1.00	1.00	1.00	1.00	1.00	1.00	1.00	1.00	1.00	1.00	1.00	1.00
PHF Adj:	0.95	0.95	0.95	0.95	0.95	0.95	0.95	0.95	0.95	0.95	0.95	0.95
PHF Volume:	131	2131	447	552	1563	37	12	73	88	367	88	482
Reduct Vol:	0	0	0	0	0	0	0	0	0	0	0	0
Reduced Vol:	131	2131	447	552	1563	37	12	73	88	367	88	482
PCE Adj:	1.00	1.00	1.00	1.00	1.00	1.00	1.00	1.00	1.00	1.00	1.00	1.00
MLF Adj:	1.00	1.00	1.00	1.00	1.00	1.00	1.00	1.00	1.00	1.00	1.00	1.00
FinalVolume:	131	2131	447	552	1563	37	12	73	88	367	88	482
Saturation Flow Module:												
Sat/Lane:	1900	1900	1900	1900	1900	1900	1900	1900	1900	1900	1900	1900
Adjustment:	0.93	0.91	0.91	0.90	0.98	0.98	0.91	0.91	0.91	0.94	0.94	0.83
Lanes:	1.00	1.65	0.35	2.00	0.98	0.02	0.07	0.42	0.51	0.81	0.19	1.00
Final Sat.:	1769	2848	598	3432	1814	43	116	727	885	1442	347	1583
Capacity Analysis Module:												
Vol/Sat:	0.07	0.75	0.75	0.16	0.86	0.86	0.10	0.10	0.10	0.25	0.25	0.30
Crit Moves:	****				****		****					****
Green/Cycle:	0.05	0.52	0.52	0.11	0.59	0.59	0.07	0.08	0.08	0.20	0.21	0.21
Volume/Cap:	1.47	1.43	1.43	1.43	1.47	1.47	1.47	1.29	1.29	1.29	1.23	1.47
Uniform Del:	85.5	42.9	42.9	79.9	37.3	37.3	83.9	83.0	83.0	72.2	71.4	71.4
IncremntDel:	263.0	196	196.2	207.4	217	217.0	252.2	175	174.9	150.0	125	227.9
InitQueuDel:	0.0	0.0	0.0	0.0	0.0	0.0	0.0	0.0	0.0	0.0	0.0	0.0
Delay Adj:	1.00	1.00	1.00	1.00	1.00	1.00	1.00	1.00	1.00	1.00	1.00	1.00
Delay/Veh:	348.5	239	239.1	287.3	254	254.2	336.1	258	257.9	222.2	196	299.2
User DelAdj:	1.00	1.00	1.00	1.00	1.00	1.00	1.00	1.00	1.00	1.00	1.00	1.00
AdjDel/Veh:	348.5	239	239.1	287.3	254	254.2	336.1	258	257.9	222.2	196	299.2
LOS by Move:	F	F	F	F	F	F	F	F	F	F	F	F
HCM2kAvgQ:	14	122	122	28	147	147	18	16	16	39	37	46

Level Of Service Computation Report
2000 HCM Operations Method (Future Volume Alternative)

Intersection #202 Mission Ave & River Rd

Cycle (sec): 180 Critical Vol./Cap.(X): 1.619
Loss Time (sec): 16 Average Delay (sec/veh): 318.4
Optimal Cycle: OPTIMIZED Level Of Service: F

Street Name:	SR76						River Rd					
Approach:	North Bound			South Bound			East Bound			West Bound		
Movement:	L - T - R			L - T - R			L - T - R			L - T - R		
Control:	Protected			Protected			Protected			Protected		
Rights:	Include			Include			Include			Include		
Min. Green:	5	5	5	5	5	5	5	5	5	5	5	5
Y+R:	4.0	4.0	4.0	4.0	4.0	4.0	4.0	4.0	4.0	4.0	4.0	4.0
Lanes:	1	0	1 0	0	0	0	0 1	0	1	0 0	0	0
Volume Module:												
Base Vol:	212	2185	0	0	1794	154	369	0	179	0	0	0
Growth Adj:	1.00	1.00	1.00	1.00	1.00	1.00	1.00	1.00	1.00	1.00	1.00	1.00
Initial Bse:	212	2185	0	0	1794	154	369	0	179	0	0	0
Added Vol:	0	28	0	0	12	4	8	0	0	0	0	0
PasserByVol:	0	0	0	0	0	0	0	0	0	0	0	0
Initial Fut:	212	2213	0	0	1806	158	377	0	179	0	0	0
User Adj:	1.00	1.00	1.00	1.00	1.00	1.00	1.00	1.00	1.00	1.00	1.00	1.00
PHF Adj:	0.95	0.95	0.95	0.95	0.95	0.95	0.95	0.95	0.95	0.95	0.95	0.95
PHF Volume:	223	2329	0	0	1901	166	397	0	188	0	0	0
Reduct Vol:	0	0	0	0	0	0	0	0	0	0	0	0
Reduced Vol:	223	2329	0	0	1901	166	397	0	188	0	0	0
PCE Adj:	1.00	1.00	1.00	1.00	1.00	1.00	1.00	1.00	1.00	1.00	1.00	1.00
MLF Adj:	1.00	1.00	1.00	1.00	1.00	1.00	1.00	1.00	1.00	1.00	1.00	1.00
FinalVolume:	223	2329	0	0	1901	166	397	0	188	0	0	0
Saturation Flow Module:												
Sat/Lane:	1900	1900	1900	1900	1900	1900	1900	1900	1900	1900	1900	1900
Adjustment:	0.93	0.98	1.00	1.00	0.97	0.97	0.93	1.00	0.83	1.00	1.00	1.00
Lanes:	1.00	1.00	0.00	0.00	0.92	0.08	1.00	0.00	1.00	0.00	0.00	0.00
Final Sat.:	1769	1862	0	0	1693	148	1769	0	1583	0	0	0
Capacity Analysis Module:												
Vol/Sat:	0.13	1.25	0.00	0.00	1.12	1.12	0.22	0.00	0.12	0.00	0.00	0.00
Crit Moves:		****		****			****					
Green/Cycle:	0.08	0.75	0.00	0.00	0.70	0.70	0.13	0.00	0.13	0.00	0.00	0.00
Volume/Cap:	1.61	1.67	0.00	0.00	1.61	1.61	1.67	0.00	0.91	0.00	0.00	0.00
Uniform Del:	82.9	22.6	0.0	0.0	27.2	27.2	77.9	0.0	77.1	0.0	0.0	0.0
IncremntDel:	304.3	305	0.0	0.0	277	277.1	319.4	0.0	37.5	0.0	0.0	0.0
InitQueuDel:	0.0	0.0	0.0	0.0	0.0	0.0	0.0	0.0	0.0	0.0	0.0	0.0
Delay Adj:	1.00	1.00	0.00	0.00	1.00	1.00	1.00	0.00	1.00	0.00	0.00	0.00
Delay/Veh:	387.2	327	0.0	0.0	304	304.2	397.4	0.0	114.6	0.0	0.0	0.0
User DelAdj:	1.00	1.00	1.00	1.00	1.00	1.00	1.00	1.00	1.00	1.00	1.00	1.00
AdjDel/Veh:	387.2	327	0.0	0.0	304	304.2	397.4	0.0	114.6	0.0	0.0	0.0
LOS by Move:	F	F	A	A	F	F	F	A	F	A	A	A
HCM2kAvgQ:	24	236	0	0	204	204	42	0	13	0	0	0

Level Of Service Computation Report
2000 HCM Operations Method (Future Volume Alternative)

Intersection #203 Mission Rd & Olive Hill Rd

Cycle (sec): 180 Critical Vol./Cap.(X): 1.556
Loss Time (sec): 16 Average Delay (sec/veh): 211.1
Optimal Cycle: OPTIMIZED Level Of Service: F

Street Name:	SR76						Olive Hill Rd					
Approach:	North Bound			South Bound			East Bound			West Bound		
Movement:	L - T - R			L - T - R			L - T - R			L - T - R		
Control:	Protected			Protected			Protected			Protected		
Rights:	Include			Include			Include			Include		
Min. Green:	5	5	5	5	5	5	5	5	5	5	5	5
Y+R:	4.0	4.0	4.0	4.0	4.0	4.0	4.0	4.0	4.0	4.0	4.0	4.0
Lanes:	1	0 1	1 0	1	0 2	0 1	1	0 1	0 1	0	1 0	0 1
Volume Module:												
Base Vol:	171	2716	205	296	1801	124	258	196	113	76	192	293
Growth Adj:	1.00	1.00	1.00	1.00	1.00	1.00	1.00	1.00	1.00	1.00	1.00	1.00
Initial Bse:	171	2716	205	296	1801	124	258	196	113	76	192	293
Added Vol:	0	37	0	1	17	1	2	0	0	0	0	3
PasserByVol:	0	0	0	0	0	0	0	0	0	0	0	0
Initial Fut:	171	2753	205	297	1818	125	260	196	113	76	192	296
User Adj:	1.00	1.00	1.00	1.00	1.00	1.00	1.00	1.00	1.00	1.00	1.00	1.00
PHF Adj:	0.95	0.95	0.95	0.95	0.95	0.95	0.95	0.95	0.95	0.95	0.95	0.95
PHF Volume:	180	2898	216	313	1914	132	274	206	119	80	202	312
Reduct Vol:	0	0	0	0	0	0	0	0	0	0	0	0
Reduced Vol:	180	2898	216	313	1914	132	274	206	119	80	202	312
PCE Adj:	1.00	1.00	1.00	1.00	1.00	1.00	1.00	1.00	1.00	1.00	1.00	1.00
MLF Adj:	1.00	1.00	1.00	1.00	1.00	1.00	1.00	1.00	1.00	1.00	1.00	1.00
FinalVolume:	180	2898	216	313	1914	132	274	206	119	80	202	312
Saturation Flow Module:												
Sat/Lane:	1900	1900	1900	1900	1900	1900	1900	1900	1900	1900	1900	1900
Adjustment:	0.93	0.92	0.92	0.93	0.93	0.83	0.93	0.98	0.83	0.97	0.97	0.83
Lanes:	1.00	1.86	0.14	1.00	2.00	1.00	1.00	1.00	1.00	0.28	0.72	1.00
Final Sat.:	1769	3260	243	1769	3538	1583	1769	1862	1583	521	1315	1583
Capacity Analysis Module:												
Vol/Sat:	0.10	0.89	0.89	0.18	0.54	0.08	0.15	0.11	0.08	0.15	0.15	0.20
Crit Moves:		****		****			****					****
Green/Cycle:	0.11	0.57	0.57	0.11	0.58	0.58	0.10	0.09	0.09	0.13	0.13	0.13
Volume/Cap:	0.94	1.56	1.56	1.56	0.94	0.14	1.56	1.17	0.79	1.17	1.21	1.56
Uniform Del:	79.6	38.6	38.6	79.8	35.1	17.6	81.0	81.5	79.8	78.2	78.6	78.6
IncremntDel:	47.4	253	252.5	273.0	9.1	0.1	276.0	121	24.5	111.7	129	273.1
InitQueuDel:	0.0	0.0	0.0	0.0	0.0	0.0	0.0	0.0	0.0	0.0	0.0	0.0
Delay Adj:	1.00	1.00	1.00	1.00	1.00	1.00	1.00	1.00	1.00	1.00	1.00	1.00
Delay/Veh:	127.0	291	291.1	352.8	44.2	17.7	357.0	202	104.3	189.9	208	351.7
User DelAdj:	1.00	1.00	1.00	1.00	1.00	1.00	1.00	1.00	1.00	1.00	1.00	1.00
AdjDel/Veh:	127.0	291	291.1	352.8	44.2	17.7	357.0	202	104.3	189.9	208	351.7
LOS by Move:	F	F	F	F	D	B	F	F	F	F	F	F
HCM2kAvgQ:	13	158	158	32	54	3	28	18	8	23	24	32

Level Of Service Computation Report
2000 HCM Operations Method (Future Volume Alternative)

Intersection #204 SR76 & Mission Rd

Cycle (sec): 180 Critical Vol./Cap.(X): 1.891
Loss Time (sec): 12 Average Delay (sec/veh): 290.7
Optimal Cycle: OPTIMIZED Level Of Service: F

Street Name:	Mission Rd						SR76					
Approach:	North Bound			South Bound			East Bound			West Bound		
Movement:	L - T - R			L - T - R			L - T - R			L - T - R		
Control:	Split Phase			Split Phase			Protected			Protected		
Rights:	Include			Include			Include			Include		
Min. Green:	5	5	5	5	5	5	5	5	5	5	5	5
Y+R:	4.0	4.0	4.0	4.0	4.0	4.0	4.0	4.0	4.0	4.0	4.0	4.0
Lanes:	0	0 0	0 0	2	0 0	0 2	2	0 1	0 0	0	0 2	0 1
Volume Module: >> Count Date: 25 Oct 2006 <<												
Base Vol:	0	0	0	300	0	869	1160	2499	0	0	1698	223
Growth Adj:	1.00	1.00	1.00	1.00	1.00	1.00	1.00	1.00	1.00	1.00	1.00	1.00
Initial Bse:	0	0	0	300	0	869	1160	2499	0	0	1698	223
Added Vol:	0	0	0	2	0	0	0	42	0	0	19	1
PasserByVol:	0	0	0	0	0	0	0	0	0	0	0	0
Initial Fut:	0	0	0	302	0	869	1160	2541	0	0	1717	224
User Adj:	1.00	1.00	1.00	1.00	1.00	1.00	1.00	1.00	1.00	1.00	1.00	1.00
PHF Adj:	0.95	0.95	0.95	0.95	0.95	0.95	0.95	0.95	0.95	0.95	0.95	0.95
PHF Volume:	0	0	0	318	0	915	1221	2675	0	0	1807	236
Reduct Vol:	0	0	0	0	0	0	0	0	0	0	0	0
Reduced Vol:	0	0	0	318	0	915	1221	2675	0	0	1807	236
PCE Adj:	1.00	1.00	1.00	1.00	1.00	1.00	1.00	1.00	1.00	1.00	1.00	1.00
MLF Adj:	1.00	1.00	1.00	1.00	1.00	1.00	1.00	1.00	1.00	1.00	1.00	1.00
FinalVolume:	0	0	0	318	0	915	1221	2675	0	0	1807	236
Saturation Flow Module:												
Sat/Lane:	1900	1900	1900	1900	1900	1900	1900	1900	1900	1900	1900	1900
Adjustment:	1.00	1.00	1.00	0.90	1.00	0.73	0.90	0.98	1.00	1.00	0.93	0.83
Lanes:	0.00	0.00	0.00	2.00	0.00	2.00	2.00	1.00	0.00	0.00	2.00	1.00
Final Sat.:	0	0	0	3432	0	2786	3432	1862	0	0	3538	1583
Capacity Analysis Module:												
Vol/Sat:	0.00	0.00	0.00	0.09	0.00	0.33	0.36	1.44	0.00	0.00	0.51	0.15
Crit Moves:						****		****		****		
Green/Cycle:	0.00	0.00	0.00	0.17	0.00	0.17	0.31	0.74	0.00	0.00	0.45	0.45
Volume/Cap:	0.00	0.00	0.00	0.55	0.00	1.95	1.13	1.95	0.00	0.00	1.13	0.33
Uniform Del:	0.0	0.0	0.0	68.6	0.0	74.8	61.7	23.7	0.0	0.0	49.4	31.9
IncremntDel:	0.0	0.0	0.0	1.1	0.0	434.8	71.8	430	0.0	0.0	68.3	0.3
InitQueuDel:	0.0	0.0	0.0	0.0	0.0	0.0	0.0	0.0	0.0	0.0	0.0	0.0
Delay Adj:	0.00	0.00	0.00	1.00	0.00	1.00	1.00	1.00	0.00	0.00	1.00	1.00
Delay/Veh:	0.0	0.0	0.0	69.7	0.0	509.6	133.5	453	0.0	0.0	118	32.2
User DelAdj:	1.00	1.00	1.00	1.00	1.00	1.00	1.00	1.00	1.00	1.00	1.00	1.00
AdjDel/Veh:	0.0	0.0	0.0	69.7	0.0	509.6	133.5	453	0.0	0.0	118	32.2
LOS by Move:	A	A	A	E	A	F	F	F	A	A	F	C
HCM2kAvgQ:	0	0	0	9	0	60	46	299	0	0	68	8

Level Of Service Computation Report
2000 HCM Operations Method (Future Volume Alternative)

Intersection #205 SR76 & Gird Rd

Cycle (sec): 180 Critical Vol./Cap.(X): 1.637
Loss Time (sec): 12 Average Delay (sec/veh): 251.7
Optimal Cycle: OPTIMIZED Level Of Service: F

Street Name:	Gird Rd						SR76					
Approach:	North Bound			South Bound			East Bound			West Bound		
Movement:	L	T	R	L	T	R	L	T	R	L	T	R
Control:	Split Phase			Split Phase			Protected			Protected		
Rights:	Include			Include			Include			Include		
Min. Green:	5	5	5	5	5	5	5	5	5	5	5	5
Y+R:	4.0	4.0	4.0	4.0	4.0	4.0	4.0	4.0	4.0	4.0	4.0	4.0
Lanes:	0	0	0	0	0	1	0	0	0	1	0	1
Volume Module: >> Count Date: 18 Oct 2006 << PM Peak												
Base Vol:	0	0	0	69	0	108	212	2527	0	0	1790	111
Growth Adj:	1.00	1.00	1.00	1.00	1.00	1.00	1.00	1.00	1.00	1.00	1.00	1.00
Initial Bse:	0	0	0	69	0	108	212	2527	0	0	1790	111
Added Vol:	0	0	0	1	0	0	0	48	0	0	22	0
PasserByVol:	0	0	0	0	0	0	0	0	0	0	0	0
Initial Fut:	0	0	0	70	0	108	212	2575	0	0	1812	111
User Adj:	1.00	1.00	1.00	1.00	1.00	1.00	1.00	1.00	1.00	1.00	1.00	1.00
PHF Adj:	0.95	0.95	0.95	0.95	0.95	0.95	0.95	0.95	0.95	0.95	0.95	0.95
PHF Volume:	0	0	0	74	0	114	223	2711	0	0	1907	117
Reduct Vol:	0	0	0	0	0	0	0	0	0	0	0	0
Reduced Vol:	0	0	0	74	0	114	223	2711	0	0	1907	117
PCE Adj:	1.00	1.00	1.00	1.00	1.00	1.00	1.00	1.00	1.00	1.00	1.00	1.00
MLF Adj:	1.00	1.00	1.00	1.00	1.00	1.00	1.00	1.00	1.00	1.00	1.00	1.00
FinalVolume:	0	0	0	74	0	114	223	2711	0	0	1907	117
Saturation Flow Module:												
Sat/Lane:	1900	1900	1900	1900	1900	1900	1900	1900	1900	1900	1900	1900
Adjustment:	1.00	1.00	1.00	0.93	1.00	0.83	0.93	0.98	1.00	1.00	0.98	0.83
Lanes:	0.00	0.00	0.00	1.00	0.00	1.00	1.00	1.00	0.00	0.00	1.00	1.00
Final Sat.:	0	0	0	1769	0	1583	1769	1862	0	0	1862	1583
Capacity Analysis Module:												
Vol/Sat:	0.00	0.00	0.00	0.04	0.00	0.07	0.13	1.46	0.00	0.00	1.02	0.07
Crit Moves:						****		****		****		
Green/Cycle:	0.00	0.00	0.00	0.04	0.00	0.04	0.10	0.86	0.00	0.00	0.79	0.79
Volume/Cap:	0.00	0.00	0.00	0.98	0.00	1.69	1.29	1.69	0.00	0.00	1.29	0.09
Uniform Del:	0.0	0.0	0.0	86.1	0.0	86.2	81.2	12.3	0.0	0.0	18.6	4.2
IncremntDel:	0.0	0.0	0.0	96.0	0.0	364.7	167.4	312	0.0	0.0	136	0.0
InitQueuDel:	0.0	0.0	0.0	0.0	0.0	0.0	0.0	0.0	0.0	0.0	0.0	0.0
Delay Adj:	0.00	0.00	0.00	1.00	0.00	1.00	1.00	1.00	0.00	0.00	1.00	1.00
Delay/Veh:	0.0	0.0	0.0	182.1	0.0	450.8	248.6	324	0.0	0.0	155	4.2
User DelAdj:	1.00	1.00	1.00	1.00	1.00	1.00	1.00	1.00	1.00	1.00	1.00	1.00
AdjDel/Veh:	0.0	0.0	0.0	182.1	0.0	450.8	248.6	324	0.0	0.0	155	4.2
LOS by Move:	A	A	A	F	A	F	F	F	A	A	F	A
HCM2kAvgQ:	0	0	0	7	0	13	20	276	0	0	153	1

Level Of Service Computation Report
2000 HCM Operations Method (Future Volume Alternative)

Intersection #206 SR76 & Old Hwy 395

Cycle (sec): 175 Critical Vol./Cap.(X): 1.589
Loss Time (sec): 16 Average Delay (sec/veh): 246.5
Optimal Cycle: OPTIMIZED Level Of Service: F

Street Name:	Old Hwy 395						SR76					
Approach:	North Bound			South Bound			East Bound			West Bound		
Movement:	L	T	R	L	T	R	L	T	R	L	T	R
Control:	Split Phase			Split Phase			Protected			Protected		
Rights:	Include			Include			Include			Include		
Min. Green:	5	5	5	5	5	5	5	5	5	5	5	5
Y+R:	4.0	4.0	4.0	4.0	4.0	4.0	4.0	4.0	4.0	4.0	4.0	4.0
Lanes:	1	0	0	1	0	0	0	1!	0	0	1	0
Volume Module: >> Count Date: 25 Oct 2006 << PM Peak												
Base Vol:	211	266	114	550	194	136	160	1709	177	176	1214	564
Growth Adj:	1.00	1.00	1.00	1.00	1.00	1.00	1.00	1.00	1.00	1.00	1.00	1.00
Initial Bse:	211	266	114	550	194	136	160	1709	177	176	1214	564
Added Vol:	0	0	5	1	0	0	0	54	0	2	24	0
PasserByVol:	0	0	0	0	0	0	0	0	0	0	0	0
Initial Fut:	211	266	119	551	194	136	160	1763	177	178	1238	564
User Adj:	1.00	1.00	1.00	1.00	1.00	1.00	1.00	1.00	1.00	1.00	1.00	1.00
PHF Adj:	0.95	0.95	0.95	0.95	0.95	0.95	0.95	0.95	0.95	0.95	0.95	0.95
PHF Volume:	222	280	125	580	204	143	168	1856	186	187	1303	594
Reduct Vol:	0	0	0	0	0	0	0	0	0	0	0	0
Reduced Vol:	222	280	125	580	204	143	168	1856	186	187	1303	594
PCE Adj:	1.00	1.00	1.00	1.00	1.00	1.00	1.00	1.00	1.00	1.00	1.00	1.00
MLF Adj:	1.00	1.00	1.00	1.00	1.00	1.00	1.00	1.00	1.00	1.00	1.00	1.00
FinalVolume:	222	280	125	580	204	143	168	1856	186	187	1303	594
Saturation Flow Module:												
Sat/Lane:	1900	1900	1900	1900	1900	1900	1900	1900	1900	1900	1900	1900
Adjustment:	0.93	0.93	0.93	0.93	0.93	0.93	0.93	0.92	0.92	0.93	0.93	0.83
Lanes:	1.00	0.69	0.31	0.63	0.22	0.15	1.00	1.82	0.18	1.00	2.00	1.00
Final Sat.:	1769	1227	549	1106	389	273	1769	3170	318	1769	3538	1568
Capacity Analysis Module:												
Vol/Sat:	0.13	0.23	0.23	0.52	0.52	0.52	0.10	0.59	0.59	0.11	0.37	0.38
Crit Moves:			****			****		****		****		
Green/Cycle:	0.14	0.14	0.14	0.33	0.33	0.33	0.09	0.37	0.37	0.07	0.35	0.35
Volume/Cap:	0.87	1.59	1.59	1.59	1.59	1.59	1.09	1.59	1.59	1.59	1.06	1.09
Uniform Del:	73.4	74.9	74.9	58.6	58.6	58.6	79.9	55.3	55.3	81.7	57.1	57.1
IncremntDel:	26.8	283	283.0	273.2	273	273.2	98.3	269	268.9	301.4	43.1	65.1
InitQueuDel:	0.0	0.0	0.0	0.0	0.0	0.0	0.0	0.0	0.0	0.0	0.0	0.0
Delay Adj:	1.00	1.00	1.00	1.00	1.00	1.00	1.00	1.00	1.00	1.00	1.00	1.00
Delay/Veh:	100.2	358	357.9	331.9	332	331.9	178.2	324	324.2	383.1	100	122.2
User DelAdj:	1.00	1.00	1.00	1.00	1.00	1.00	1.00	1.00	1.00	1.00	1.00	1.00
AdjDel/Veh:	100.2	358	357.9	331.9	332	331.9	178.2	324	324.2	383.1	100	122.2
LOS by Move:	F	F	F	F	F	F	F	F	F	F	F	F
HCM2kAvgQ:	14	41	41	91	91	91	14	105	105	18	39	36

Level Of Service Computation Report
2000 HCM Operations Method (Future Volume Alternative)

Intersection #207 SR76 & I-15 SB Ramps

Cycle (sec): 180 Critical Vol./Cap.(X): 2.043
Loss Time (sec): 12 Average Delay (sec/veh): 357.9
Optimal Cycle: OPTIMIZED Level Of Service: F

Street Name:	I-15 SB Ramps									SR76		
Approach:	North Bound			South Bound			East Bound			West Bound		
Movement:	L -	T -	R	L -	T -	R	L -	T -	R	L -	T -	R
Control:	Split Phase			Split Phase			Protected			Protected		
Rights:	Include			Include			Include			Include		
Min. Green:	5	5	5	5	5	5	5	5	5	5	5	5
Y+R:	4.0	4.0	4.0	4.0	4.0	4.0	4.0	4.0	4.0	4.0	4.0	4.0
Lanes:	0	0	0	0	0	0	0	1	0	0	1	0
Volume Module: >> Count Date: 25 Oct 2006 << PM Peak												
Base Vol:	0	0	0	322	13	855	0	1808	357	421	1074	0
Growth Adj:	1.00	1.00	1.00	1.00	1.00	1.00	1.00	1.00	1.00	1.00	1.00	1.00
Initial Bse:	0	0	0	322	13	855	0	1808	357	421	1074	0
Added Vol:	0	0	0	12	0	0	0	60	0	53	27	0
PasserByVol:	0	0	0	0	0	0	0	0	0	0	0	0
Initial Fut:	0	0	0	334	13	855	0	1868	357	474	1101	0
User Adj:	1.00	1.00	1.00	1.00	1.00	1.00	1.00	1.00	1.00	1.00	1.00	1.00
PHF Adj:	0.95	0.95	0.95	0.95	0.95	0.95	0.95	0.95	0.95	0.95	0.95	0.95
PHF Volume:	0	0	0	352	14	900	0	1966	376	499	1159	0
Reduct Vol:	0	0	0	0	0	0	0	0	0	0	0	0
Reduced Vol:	0	0	0	352	14	900	0	1966	376	499	1159	0
PCE Adj:	1.00	1.00	1.00	1.00	1.00	1.00	1.00	1.00	1.00	1.00	1.00	1.00
MLF Adj:	1.00	1.00	1.00	1.00	1.00	1.00	1.00	1.00	1.00	1.00	1.00	1.00
FinalVolume:	0	0	0	352	14	900	0	1966	376	499	1159	0
Saturation Flow Module:												
Sat/Lane:	1900	1900	1900	1900	1900	1900	1900	1900	1900	1900	1900	1900
Adjustment:	1.00	1.00	1.00	0.94	0.94	0.83	1.00	0.98	0.83	0.93	0.98	1.00
Lanes:	0.00	0.00	0.00	0.96	0.04	1.00	0.00	1.00	1.00	1.00	1.00	0.00
Final Sat.:	0	0	0	1717	67	1583	0	1862	1583	1769	1862	0
Capacity Analysis Module:												
Vol/Sat:	0.00	0.00	0.00	0.20	0.20	0.57	0.00	1.06	0.24	0.28	0.62	0.00
Crit Moves:						****		****		****		
Green/Cycle:	0.00	0.00	0.00	0.28	0.28	0.28	0.00	0.52	0.52	0.14	0.63	0.00
Volume/Cap:	0.00	0.00	0.00	0.74	0.74	2.04	0.00	2.04	0.46	2.04	0.99	0.00
Uniform Del:	0.0	0.0	0.0	58.9	58.9	64.9	0.0	43.5	27.5	77.6	33.2	0.0
IncremntDel:	0.0	0.0	0.0	5.7	5.7	477.2	0.0	473	0.4	483.3	24.5	0.0
InitQueuDel:	0.0	0.0	0.0	0.0	0.0	0.0	0.0	0.0	0.0	0.0	0.0	0.0
Delay Adj:	0.00	0.00	0.00	1.00	1.00	1.00	0.00	1.00	1.00	1.00	1.00	0.00
Delay/Veh:	0.0	0.0	0.0	64.6	64.6	542.1	0.0	516	28.0	560.9	57.7	0.0
User DelAdj:	1.00	1.00	1.00	1.00	1.00	1.00	1.00	1.00	1.00	1.00	1.00	1.00
AdjDel/Veh:	0.0	0.0	0.0	64.6	64.6	542.1	0.0	516	28.0	560.9	57.7	0.0
LOS by Move:	A	A	A	E	E	F	A	F	C	F	E	A
HCM2kAvgQ:	0	0	0	19	19	104	0	224	12	57	61	0

Level Of Service Computation Report
2000 HCM Operations Method (Future Volume Alternative)

Intersection #208 SR76 & I-15 NB Ramps

Cycle (sec): 160 Critical Vol./Cap.(X): 1.739
Loss Time (sec): 12 Average Delay (sec/veh): 272.9
Optimal Cycle: OPTIMIZED Level Of Service: F

Street Name:	I-15 NB Ramps									SR76		
Approach:	North Bound			South Bound			East Bound			West Bound		
Movement:	L -	T -	R	L -	T -	R	L -	T -	R	L -	T -	R
Control:	Split Phase			Split Phase			Protected			Protected		
Rights:	Include			Include			Include			Include		
Min. Green:	5	5	5	5	5	5	5	5	5	5	5	5
Y+R:	4.0	4.0	4.0	4.0	4.0	4.0	4.0	4.0	4.0	4.0	4.0	4.0
Lanes:	0	1	0	0	1	0	0	0	0	0	1	0
Volume Module:PM Peak												
Base Vol:	433	12	517	0	0	0	1230	711	0	0	722	295
Growth Adj:	1.00	1.00	1.00	1.00	1.00	1.00	1.00	1.00	1.00	1.00	1.00	1.00
Initial Bse:	433	12	517	0	0	0	1230	711	0	0	722	295
Added Vol:	0	0	119	0	0	0	0	72	0	0	80	5
PasserByVol:	0	0	0	0	0	0	0	0	0	0	0	0
Initial Fut:	433	12	636	0	0	0	1230	783	0	0	802	300
User Adj:	1.00	1.00	1.00	1.00	1.00	1.00	1.00	1.00	1.00	1.00	1.00	1.00
PHF Adj:	0.95	0.95	0.95	0.95	0.95	0.95	0.95	0.95	0.95	0.95	0.95	0.95
PHF Volume:	456	13	669	0	0	0	1295	824	0	0	844	316
Reduct Vol:	0	0	0	0	0	0	0	0	0	0	0	0
Reduced Vol:	456	13	669	0	0	0	1295	824	0	0	844	316
PCE Adj:	1.00	1.00	1.00	1.00	1.00	1.00	1.00	1.00	1.00	1.00	1.00	1.00
MLF Adj:	1.00	1.00	1.00	1.00	1.00	1.00	1.00	1.00	1.00	1.00	1.00	1.00
FinalVolume:	456	13	669	0	0	0	1295	824	0	0	844	316
Saturation Flow Module:												
Sat/Lane:	1900	1900	1900	1900	1900	1900	1900	1900	1900	1900	1900	1900
Adjustment:	0.92	0.92	0.83	1.00	1.00	1.00	0.93	0.98	1.00	1.00	0.98	0.83
Lanes:	0.97	0.03	1.00	0.00	0.00	0.00	1.00	1.00	0.00	0.00	1.00	1.00
Final Sat.:	1703	47	1583	0	0	0	1769	1862	0	0	1862	1583
Capacity Analysis Module:												
Vol/Sat:	0.27	0.27	0.42	0.00	0.00	0.00	0.73	0.44	0.00	0.00	0.45	0.20
Crit Moves:			****				****				****	
Green/Cycle:	0.24	0.24	0.24	0.00	0.00	0.00	0.42	0.64	0.00	0.00	0.26	0.26
Volume/Cap:	1.10	1.10	1.74	0.00	0.00	0.00	1.74	0.70	0.00	0.00	1.74	0.77
Uniform Del:	60.5	60.5	60.5	0.0	0.0	0.0	46.3	18.9	0.0	0.0	59.1	54.6
IncremntDel:	73.5	73.5	343.1	0.0	0.0	0.0	338.0	1.8	0.0	0.0	341	8.3
InitQueuDel:	0.0	0.0	0.0	0.0	0.0	0.0	0.0	0.0	0.0	0.0	0.0	0.0
Delay Adj:	1.00	1.00	1.00	0.00	0.00	0.00	1.00	1.00	0.00	0.00	1.00	1.00
Delay/Veh:	134.0	134	403.6	0.0	0.0	0.0	384.3	20.8	0.0	0.0	400	62.9
User DelAdj:	1.00	1.00	1.00	1.00	1.00	1.00	1.00	1.00	1.00	1.00	1.00	1.00
AdjDel/Veh:	134.0	134	403.6	0.0	0.0	0.0	384.3	20.8	0.0	0.0	400	62.9
LOS by Move:	F	F	F	A	A	A	F	C	A	A	F	E
HCM2kAvgQ:	32	32	68	0	0	0	126	24	0	0	85	16

Level Of Service Computation Report
2000 HCM Operations Method (Future Volume Alternative)

Intersection #209 SR76 & Pankey Rd

Cycle (sec): 100 | Critical Vol./Cap.(X): 0.818
Loss Time (sec): 0 | Average Delay (sec/veh): 33.2
Optimal Cycle: 125 | Level Of Service: C

Street Name:	Pankey Rd						SR76					
Approach:	North Bound			South Bound			East Bound			West Bound		
Movement:	L	T	R	L	T	R	L	T	R	L	T	R
Control:	Protected			Protected			Protected			Protected		
Rights:	Include			Include			Include			Include		
Min. Green:	5	5	5	5	5	5	5	5	5	5	5	5
Y+R:	4.0	4.0	4.0	4.0	4.0	4.0	4.0	4.0	4.0	4.0	4.0	4.0
Lanes:	1	0	2	0	1	1	0	1	1	0	1	0
Volume Module: >> Count Date: 25 Oct 2006 <<												
Base Vol:	311	382	117	98	447	202	145	1074	333	78	979	73
Growth Adj:	1.00	1.00	1.00	1.00	1.00	1.00	1.00	1.00	1.00	1.00	1.00	1.00
Initial Bse:	311	382	117	98	447	202	145	1074	333	78	979	73
Added Vol:	0	0	28	13	0	0	0	191	0	12	85	6
PasserByVol:	0	0	0	0	0	0	0	0	0	0	0	0
Initial Fut:	311	382	145	111	447	202	145	1265	333	90	1064	79
User Adj:	1.00	1.00	1.00	1.00	1.00	1.00	1.00	1.00	1.00	1.00	1.00	1.00
PHF Adj:	0.95	0.95	0.95	0.95	0.95	0.95	0.95	0.95	0.95	0.95	0.95	0.95
PHF Volume:	327	402	153	117	471	213	153	1332	351	95	1120	83
Reduct Vol:	0	0	0	0	0	0	0	0	0	0	0	0
Reduced Vol:	327	402	153	117	471	213	153	1332	351	95	1120	83
PCE Adj:	1.00	1.00	1.00	1.00	1.00	1.00	1.00	1.00	1.00	1.00	1.00	1.00
MLF Adj:	1.00	1.00	1.00	1.00	1.00	1.00	1.00	1.00	1.00	1.00	1.00	1.00
FinalVolume:	327	402	153	117	471	213	153	1332	351	95	1120	83
Saturation Flow Module:												
Sat/Lane:	1900	1900	1900	1900	1900	1900	1900	1900	1900	1900	1900	1900
Adjustment:	0.93	0.93	0.83	0.93	0.89	0.89	0.93	0.93	0.83	0.93	0.92	0.92
Lanes:	1.00	2.00	1.00	1.00	1.38	0.62	1.00	2.00	1.00	1.00	1.86	0.14
Final Sat.:	1769	3538	1583	1769	2322	1049	1769	3538	1583	1769	3260	242
Capacity Analysis Module:												
Vol/Sat:	0.19	0.11	0.10	0.07	0.20	0.20	0.09	0.38	0.22	0.05	0.34	0.34
Crit Moves:	****				****		****				****	
Green/Cycle:	0.23	0.30	0.30	0.17	0.25	0.25	0.11	0.46	0.46	0.07	0.42	0.42
Volume/Cap:	0.82	0.38	0.32	0.38	0.82	0.82	0.82	0.82	0.48	0.82	0.82	0.82
Uniform Del:	36.7	27.6	27.1	36.5	35.5	35.5	43.8	23.4	18.7	46.1	25.6	25.6
IncremntDel:	12.4	0.2	0.4	0.8	6.3	6.3	23.7	3.4	0.5	34.7	3.7	3.7
InitQueuDel:	0.0	0.0	0.0	0.0	0.0	0.0	0.0	0.0	0.0	0.0	0.0	0.0
Delay Adj:	1.00	1.00	1.00	1.00	1.00	1.00	1.00	1.00	1.00	1.00	1.00	1.00
Delay/Veh:	49.1	27.9	27.5	37.3	41.8	41.8	67.5	26.7	19.2	80.8	29.3	29.3
User DelAdj:	1.00	1.00	1.00	1.00	1.00	1.00	1.00	1.00	1.00	1.00	1.00	1.00
AdjDel/Veh:	49.1	27.9	27.5	37.3	41.8	41.8	67.5	26.7	19.2	80.8	29.3	29.3
LOS by Move:	D	C	C	D	D	D	E	C	B	F	C	C
HCM2kAvgQ:	12	5	4	3	13	13	7	21	8	5	19	19

Level Of Service Computation Report
2000 HCM Operations Method (Future Volume Alternative)

Intersection #210 SR76 & Horse Ranch Creek Rd

Cycle (sec): 100 | Critical Vol./Cap.(X): 0.583
Loss Time (sec): 0 | Average Delay (sec/veh): 19.7
Optimal Cycle: 55 | Level Of Service: B

Street Name:	Horse Ranch Creek Rd						SR76					
Approach:	North Bound			South Bound			East Bound			West Bound		
Movement:	L	T	R	L	T	R	L	T	R	L	T	R
Control:	Protected			Protected			Protected			Protected		
Rights:	Include			Include			Include			Include		
Min. Green:	5	5	5	5	5	5	5	5	5	5	5	5
Y+R:	4.0	4.0	4.0	4.0	4.0	4.0	4.0	4.0	4.0	4.0	4.0	4.0
Lanes:	0	0	1!	0	0	1	0	1!	0	1	1	0	1	1	0	1	0	2	0	1
Volume Module:												
Base Vol:	0	0	0	132	0	307	346	825	0	0	759	117
Growth Adj:	1.00	1.00	1.00	1.00	1.00	1.00	1.00	1.00	1.00	1.00	1.00	1.00
Initial Bse:	0	0	0	132	0	307	346	825	0	0	759	117
Added Vol:	0	0	0	56	0	0	0	232	0	0	103	25
PasserByVol:	0	0	0	0	0	0	0	0	0	0	0	0
Initial Fut:	0	0	0	188	0	307	346	1057	0	0	862	142
User Adj:	1.00	1.00	1.00	1.00	1.00	1.00	1.00	1.00	1.00	1.00	1.00	1.00
PHF Adj:	0.95	0.95	0.95	0.95	0.95	0.95	0.95	0.95	0.95	0.95	0.95	0.95
PHF Volume:	0	0	0	198	0	323	364	1113	0	0	907	149
Reduct Vol:	0	0	0	0	0	0	0	0	0	0	0	0
Reduced Vol:	0	0	0	198	0	323	364	1113	0	0	907	149
PCE Adj:	1.00	1.00	1.00	1.00	1.00	1.00	1.00	1.00	1.00	1.00	1.00	1.00
MLF Adj:	1.00	1.00	1.00	1.00	1.00	1.00	1.00	1.00	1.00	1.00	1.00	1.00
FinalVolume:	0	0	0	198	0	323	364	1113	0	0	907	149
Saturation Flow Module:												
Sat/Lane:	1900	1900	1900	1900	1900	1900	1900	1900	1900	1900	1900	1900
Adjustment:	1.00	1.00	1.00	0.87	1.00	0.87	0.93	0.93	0.95	1.00	0.93	0.83
Lanes:	0.00	1.00	0.00	1.38	0.00	1.62	1.00	2.00	0.00	1.00	2.00	1.00
Final Sat.:	0	1900	0	2286	0	2684	1769	3538	0	1900	3538	1583
Capacity Analysis Module:												
Vol/Sat:	0.00	0.00	0.00	0.09	0.00	0.12	0.21	0.31	0.00	0.00	0.26	0.09
Crit Moves:						****	****				****	
Green/Cycle:	0.00	0.00	0.00	0.16	0.00	0.21	0.35	0.68	0.00	0.00	0.44	0.44
Volume/Cap:	0.00	0.00	0.00	0.53	0.00	0.58	0.58	0.46	0.00	0.00	0.58	0.21
Uniform Del:	0.0	0.0	0.0	38.4	0.0	35.8	26.3	7.3	0.0	0.0	21.1	17.3
IncremntDel:	0.0	0.0	0.0	0.6	0.0	1.0	1.4	0.1	0.0	0.0	0.6	0.2
InitQueuDel:	0.0	0.0	0.0	0.0	0.0	0.0	0.0	0.0	0.0	0.0	0.0	0.0
Delay Adj:	0.00	0.00	0.00	1.00	0.00	1.00	1.00	1.00	0.00	0.00	1.00	1.00
Delay/Veh:	0.0	0.0	0.0	38.9	0.0	36.8	27.7	7.4	0.0	0.0	21.6	17.5
User DelAdj:	1.00	1.00	1.00	1.00	1.00	1.00	1.00	1.00	1.00	1.00	1.00	1.00
AdjDel/Veh:	0.0	0.0	0.0	38.9	0.0	36.8	27.7	7.4	0.0	0.0	21.6	17.5
LOS by Move:	A	A	A	D	A	D	C	A	A	A	C	B
HCM2kAvgQ:	0	0	0	5	0	6	10	8	0	0	11	3

```
-------------------------------------------------------------------------------
-------------------------------------------------------------------------------
                      Level Of Service Computation Report
           2000 HCM Unsignalized Method (Future Volume Alternative)
*******************************************************************************
Intersection #211 SR76 & Rice Cyn Rd
*******************************************************************************
Average Delay (sec/veh):    109.2       Worst Case Level Of Service: F[2156.6]
*******************************************************************************
Street Name:           Rice Cyn Rd                          SR76
Approach:      North Bound      South Bound       East Bound       West Bound
Movement:     L  -  T  -  R    L  -  T  -  R    L  -  T  -  R    L  -  T  -  R
------------|---------------||---------------||---------------||---------------|
Control:        Stop Sign        Stop Sign       Uncontrolled     Uncontrolled
Rights:           Include          Include          Include          Include
Lanes:        0  0  0  0  0    0  0  1! 0  0    0  1  0  0  0    0  0  0  1  0
------------|---------------||---------------||---------------||---------------|
Volume Module: >> Count Date: 19 Oct 2006 <<
Base Vol:       0    0     0    40    0    75   110  909     0     0 1112    84
Growth Adj:  1.00 1.00  1.00  1.00 1.00  1.00  1.00 1.00  1.00  1.00 1.00  1.00
Initial Bse:    0    0     0    40    0    75   110  909     0     0 1112    84
Added Vol:      0    0     0    25    0     0     0  287     0     0  128    11
PasserByVol:    0    0     0     0    0     0     0    0     0     0    0     0
Initial Fut:    0    0     0    65    0    75   110 1196     0     0 1240    95
User Adj:    1.00 1.00  1.00  1.00 1.00  1.00  1.00 1.00  1.00  1.00 1.00  1.00
PHF Adj:     0.95 0.95  0.95  0.95 0.95  0.95  0.95 0.95  0.95  0.95 0.95  0.95
PHF Volume:     0    0     0    68    0    79   116 1259     0     0 1305   100
Reduct Vol:     0    0     0     0    0     0     0    0     0     0    0     0
FinalVolume:    0    0     0    68    0    79   116 1259     0     0 1305   100
------------|---------------||---------------||---------------||---------------|
Critical Gap Module:
Critical Gp:xxxxx xxxx xxxxx   6.4  6.5   6.2   4.1 xxxx xxxxx xxxxx xxxx xxxxx
FollowUpTim:xxxxx xxxx xxxxx   3.5  4.0   3.3   2.2 xxxx xxxxx xxxxx xxxx xxxxx
------------|---------------||---------------||---------------||---------------|
Capacity Module:
Cnflict Vol: xxxx xxxx xxxxx  2866 2866  1375  1415 xxxx xxxxx  xxxx xxxx xxxxx
Potent Cap.: xxxx xxxx xxxxx    18   17   178   481 xxxx xxxxx  xxxx xxxx xxxxx
Move Cap.:   xxxx xxxx xxxxx    14   12   175   477 xxxx xxxxx  xxxx xxxx xxxxx
Volume/Cap:  xxxx xxxx  xxxx  4.73 0.00  0.45  0.24 xxxx  xxxx  xxxx xxxx  xxxx
------------|---------------||---------------||---------------||---------------|
Level Of Service Module:
2Way95thQ:   xxxx xxxx xxxxx  xxxx xxxx xxxxx   0.9 xxxx xxxxx  xxxx xxxx xxxxx
Control Del:xxxxx xxxx xxxxx xxxxx xxxx xxxxx  14.9 xxxx xxxxx xxxxx xxxx xxxxx
LOS by Move:    *    *     *     *    *     *     B     *     *     *     *     *
Movement:     LT - LTR - RT    LT - LTR - RT    LT - LTR - RT    LT - LTR - RT
Shared Cap.: xxxx xxxx xxxxx  xxxx   28 xxxxx  xxxx xxxx xxxxx  xxxx xxxx xxxxx
SharedQueue:xxxxx xxxx xxxxx xxxxx 17.9 xxxxx   0.9 xxxx xxxxx xxxxx xxxx xxxxx
Shrd ConDel:xxxxx xxxx xxxxx xxxxx 2157 xxxxx  14.9 xxxx xxxxx xxxxx xxxx xxxxx
Shared LOS:     *    *     *     *    F     *     B     *     *     *     *     *
ApproachDel:    xxxxxx           2156.6           xxxxxx           xxxxxx
ApproachLOS:         *                F                *                *
*******************************************************************************
Note: Queue reported is the number of cars per lane.
*******************************************************************************
```



```
-------------------------------------------------------------------------------
-------------------------------------------------------------------------------
                      Level Of Service Computation Report
           2000 HCM Unsignalized Method (Future Volume Alternative)
*******************************************************************************
Intersection #212 SR76 & Couser Cyn Rd
*******************************************************************************
Average Delay (sec/veh):     29.2       Worst Case Level Of Service: F[933.8]
*******************************************************************************
Street Name:          Couser Cyn Rd                         SR76
Approach:      North Bound      South Bound       East Bound       West Bound
Movement:     L  -  T  -  R    L  -  T  -  R    L  -  T  -  R    L  -  T  -  R
------------|---------------||---------------||---------------||---------------|
Control:        Stop Sign        Stop Sign       Uncontrolled     Uncontrolled
Rights:           Include          Include          Include          Include
Lanes:        0  0  1! 0  0    0  0  1! 0  0    0  0  0  1  0    0  1  0  0  0
------------|---------------||---------------||---------------||---------------|
Volume Module:
Base Vol:      52    0    27     0    0     0     0  918    43    32 1052     0
Growth Adj:  1.00 1.00  1.00  1.00 1.00  1.00  1.00 1.00  1.00  1.00 1.00  1.00
Initial Bse:   52    0    27     0    0     0     0  918    43    32 1052     0
Added Vol:      0    0     1     0    0     0     0  312     0     0  139     0
PasserByVol:    0    0     0     0    0     0     0    0     0     0    0     0
Initial Fut:   52    0    28     0    0     0     0 1230    43    32 1191     0
User Adj:    1.00 1.00  1.00  1.00 1.00  1.00  1.00 1.00  1.00  1.00 1.00  1.00
PHF Adj:     0.95 0.95  0.95  0.95 0.95  0.95  0.95 0.95  0.95  0.95 0.95  0.95
PHF Volume:    55    0    29     0    0     0     0 1295    45    34 1254     0
Reduct Vol:     0    0     0     0    0     0     0    0     0     0    0     0
FinalVolume:   55    0    29     0    0     0     0 1295    45    34 1254     0
------------|---------------||---------------||---------------||---------------|
Critical Gap Module:
Critical Gp:  6.4  6.5   6.2   7.1  6.5   6.2 xxxxx xxxx xxxxx   4.1 xxxx xxxxx
FollowUpTim:  3.5  4.0   3.3   3.5  4.0   3.3 xxxxx xxxx xxxxx   2.2 xxxx xxxxx
------------|---------------||---------------||---------------||---------------|
Capacity Module:
Cnflict Vol: 2658 2658  1337  2673 2681  1274  xxxx xxxx xxxxx  1350 xxxx xxxxx
Potent Cap.:   25   23   187    15   22   204  xxxx xxxx xxxxx   510 xxxx xxxxx
Move Cap.:     23   21   184    11   20   201  xxxx xxxx xxxxx   506 xxxx xxxxx
Volume/Cap:  2.34 0.00  0.16  0.00 0.00  0.00  xxxx xxxx  xxxx  0.07 xxxx  xxxx
------------|---------------||---------------||---------------||---------------|
Level Of Service Module:
2Way95thQ:   xxxx xxxx xxxxx  xxxx xxxx xxxxx  xxxx xxxx xxxxx   0.2 xxxx xxxxx
Control Del:xxxxx xxxx xxxxx xxxxx xxxx xxxxx xxxxx xxxx xxxxx  12.6 xxxx xxxxx
LOS by Move:    *    *     *     *    *     *     *     *     *     B     *     *
Movement:     LT - LTR - RT    LT - LTR - RT    LT - LTR - RT    LT - LTR - RT
Shared Cap.: xxxx   34 xxxxx  xxxx    0 xxxxx  xxxx xxxx xxxxx  xxxx xxxx xxxxx
SharedQueue:xxxxx  9.6 xxxxx xxxxx xxxx xxxxx xxxxx xxxx xxxxx   0.2 xxxx xxxxx
Shrd ConDel:xxxxx  934 xxxxx xxxxx xxxx xxxxx xxxxx xxxx xxxxx  12.6 xxxx xxxxx
Shared LOS:     *    F     *     *    *     *     *     *     *     B     *     *
ApproachDel:     933.8           xxxxxx           xxxxxx           xxxxxx
ApproachLOS:         F                *                *                *
*******************************************************************************
Note: Queue reported is the number of cars per lane.
*******************************************************************************
```

Level Of Service Computation Report
2000 HCM Operations Method (Future Volume Alternative)

Intersection #214 SR76 & C. Drwy

Cycle (sec): 90 | Critical Vol./Cap.(X): 0.985
Loss Time (sec): 12 | Average Delay (sec/veh): 19.3
Optimal Cycle: OPTIMIZED | Level Of Service: B

Street Name:	C. Drwy									SR76		
Approach:	North Bound			South Bound			East Bound			West Bound		
Movement:	L	T	R	L	T	R	L	T	R	L	T	R
Control:	Protected			Protected			Permitted			Permitted		
Rights:	Include			Include			Include			Include		
Min. Green:	5	5	5	5	5	5	5	5	5	5	5	5
Y+R:	4.0	4.0	4.0	4.0	4.0	4.0	4.0	4.0	4.0	4.0	4.0	4.0
Lanes:	0	0	1! 0	0	1	0	0	0 1	1	0	1	0	0	0	1	0	1
Volume Module:												
Base Vol:	0	0	0	0	0	0	0	927	0	0	893	0
Growth Adj:	1.00	1.00	1.00	1.00	1.00	1.00	1.00	1.00	1.00	1.00	1.00	1.00
Initial Bse:	0	0	0	0	0	0	0	927	0	0	893	0
Added Vol:	0	0	0	90	0	144	323	0	0	0	0	201
PasserByVol:	0	0	0	0	0	0	0	0	0	0	0	0
Initial Fut:	0	0	0	90	0	144	323	927	0	0	893	201
User Adj:	1.00	1.00	1.00	1.00	1.00	1.00	1.00	1.00	1.00	1.00	1.00	1.00
PHF Adj:	0.95	0.95	0.95	0.95	0.95	0.95	0.95	0.95	0.95	0.95	0.95	0.95
PHF Volume:	0	0	0	95	0	152	340	976	0	0	940	212
Reduct Vol:	0	0	0	0	0	0	0	0	0	0	0	0
Reduced Vol:	0	0	0	95	0	152	340	976	0	0	940	212
PCE Adj:	1.00	1.00	1.00	1.00	1.00	1.00	1.00	1.00	1.00	1.00	1.00	1.00
MLF Adj:	1.00	1.00	1.00	1.00	1.00	1.00	1.00	1.00	1.00	1.00	1.00	1.00
FinalVolume:	0	0	0	95	0	152	340	976	0	0	940	212
Saturation Flow Module:												
Sat/Lane:	1900	1900	1900	1900	1900	1900	1900	1900	1900	1900	1900	1900
Adjustment:	1.00	1.00	1.00	0.93	1.00	0.83	0.24	0.98	1.00	1.00	0.98	0.83
Lanes:	0.00	1.00	0.00	1.00	0.00	1.00	1.00	1.00	0.00	0.00	1.00	1.00
Final Sat.:	0	1900	0	1769	0	1583	449	1862	0	0	1862	1583
Capacity Analysis Module:												
Vol/Sat:	0.00	0.00	0.00	0.05	0.00	0.10	0.76	0.52	0.00	0.00	0.50	0.13
Crit Moves:						****	****					
Green/Cycle:	0.00	0.00	0.00	0.08	0.00	0.10	0.77	0.77	0.00	0.00	0.77	0.77
Volume/Cap:	0.00	0.00	0.00	0.70	0.00	0.98	0.98	0.68	0.00	0.00	0.66	0.17
Uniform Del:	0.0	0.0	0.0	40.6	0.0	40.6	9.9	5.0	0.0	0.0	4.8	2.8
IncremntDel:	0.0	0.0	0.0	15.2	0.0	67.8	44.2	1.4	0.0	0.0	1.1	0.1
InitQueuDel:	0.0	0.0	0.0	0.0	0.0	0.0	0.0	0.0	0.0	0.0	0.0	0.0
Delay Adj:	0.00	0.00	0.00	1.00	0.00	1.00	1.00	1.00	0.00	0.00	1.00	1.00
Delay/Veh:	0.0	0.0	0.0	55.7	0.0	108.3	54.0	6.4	0.0	0.0	6.0	2.8
User DelAdj:	1.00	1.00	1.00	1.00	1.00	1.00	1.00	1.00	1.00	1.00	1.00	1.00
AdjDel/Veh:	0.0	0.0	0.0	55.7	0.0	108.3	54.0	6.4	0.0	0.0	6.0	2.8
LOS by Move:	A	A	A	E	A	F	D	A	A	A	A	A
HCM2kAvgQ:	0	0	0	4	0	8	14	14	0	0	13	2

Level Of Service Computation Report
2000 HCM Operations Method (Future Volume Alternative)

Intersection #216 SR76 & W. Pala Mission Rd

Cycle (sec): 90 | Critical Vol./Cap.(X): 0.858
Loss Time (sec): 12 | Average Delay (sec/veh): 35.5
Optimal Cycle: OPTIMIZED | Level Of Service: D

Street Name:	W. Pala Mission Rd									SR76		
Approach:	North Bound			South Bound			East Bound			West Bound		
Movement:	L	T	R	L	T	R	L	T	R	L	T	R
Control:	Split Phase			Split Phase			Protected			Protected		
Rights:	Include			Include			Include			Include		
Min. Green:	5	5	5	5	5	5	5	5	5	5	5	5
Y+R:	4.0	4.0	4.0	4.0	4.0	4.0	4.0	4.0	4.0	4.0	4.0	4.0
Lanes:	1	0	0 1	0	0	1	0 0	1	1	0	1	0	0	1	0
Volume Module:												
Base Vol:	78	36	31	36	32	134	196	586	88	61	567	37
Growth Adj:	1.00	1.00	1.00	1.00	1.00	1.00	1.00	1.00	1.00	1.00	1.00	1.00
Initial Bse:	78	36	31	36	32	134	196	586	88	61	567	37
Added Vol:	74	0	0	0	0	84	38	19	33	0	42	0
PasserByVol:	0	0	0	0	0	0	0	0	0	0	0	0
Initial Fut:	152	36	31	36	32	218	234	605	121	61	609	37
User Adj:	1.00	1.00	1.00	1.00	1.00	1.00	1.00	1.00	1.00	1.00	1.00	1.00
PHF Adj:	0.95	0.95	0.95	0.95	0.95	0.95	0.95	0.95	0.95	0.95	0.95	0.95
PHF Volume:	160	38	33	38	34	229	246	637	127	64	641	39
Reduct Vol:	0	0	0	0	0	0	0	0	0	0	0	0
Reduced Vol:	160	38	33	38	34	229	246	637	127	64	641	39
PCE Adj:	1.00	1.00	1.00	1.00	1.00	1.00	1.00	1.00	1.00	1.00	1.00	1.00
MLF Adj:	1.00	1.00	1.00	1.00	1.00	1.00	1.00	1.00	1.00	1.00	1.00	1.00
FinalVolume:	160	38	33	38	34	229	246	637	127	64	641	39
Saturation Flow Module:												
Sat/Lane:	1900	1900	1900	1900	1900	1900	1900	1900	1900	1900	1900	1900
Adjustment:	0.93	0.91	0.91	0.95	0.95	0.83	0.93	0.91	0.91	0.93	0.97	0.97
Lanes:	1.00	0.54	0.46	0.53	0.47	1.00	1.00	1.67	0.33	1.00	0.94	0.06
Final Sat.:	1769	931	802	960	853	1583	1769	2874	575	1769	1740	106
Capacity Analysis Module:												
Vol/Sat:	0.09	0.04	0.04	0.04	0.04	0.14	0.14	0.22	0.22	0.04	0.37	0.37
Crit Moves:	****					****	****				****	
Green/Cycle:	0.11	0.11	0.11	0.17	0.17	0.17	0.16	0.47	0.47	0.12	0.43	0.43
Volume/Cap:	0.86	0.39	0.39	0.23	0.23	0.86	0.86	0.47	0.47	0.31	0.86	0.86
Uniform Del:	39.6	37.5	37.5	32.3	32.3	36.3	36.7	16.0	16.0	36.3	23.2	23.2
IncremntDel:	30.4	1.4	1.4	0.4	0.4	23.0	21.7	0.2	0.2	0.8	9.2	9.2
InitQueuDel:	0.0	0.0	0.0	0.0	0.0	0.0	0.0	0.0	0.0	0.0	0.0	0.0
Delay Adj:	1.00	1.00	1.00	1.00	1.00	1.00	1.00	1.00	1.00	1.00	1.00	1.00
Delay/Veh:	70.0	38.9	38.9	32.7	32.7	59.3	58.4	16.2	16.2	37.1	32.4	32.4
User DelAdj:	1.00	1.00	1.00	1.00	1.00	1.00	1.00	1.00	1.00	1.00	1.00	1.00
AdjDel/Veh:	70.0	38.9	38.9	32.7	32.7	59.3	58.4	16.2	16.2	37.1	32.4	32.4
LOS by Move:	E	D	D	C	C	E	E	B	B	D	C	C
HCM2kAvgQ:	7	2	2	2	2	9	10	8	8	2	20	20

Level Of Service Computation Report
2000 HCM 4-Way Stop Method (Future Volume Alternative)

Intersection #217 Pala Mission Rd & Pala Temecula Rd

Cycle (sec): 100 Critical Vol./Cap.(X): 0.837
Loss Time (sec): 0 Average Delay (sec/veh): 22.5
Optimal Cycle: 0 Level Of Service: C

Street Name:	Pala Temecula Rd						Pala Mission Rd					
Approach:	North Bound			South Bound			East Bound			West Bound		
Movement:	L	T	R	L	T	R	L	T	R	L	T	R
Control:	Stop Sign			Stop Sign			Stop Sign			Stop Sign		
Rights:	Include			Include			Include			Include		
Min. Green:	5	5	5	5	5	5	5	5	5	5	5	5
Lanes:	0 0	1! 0	0	0 0	1! 0	0	0 0	1! 0	0	0 0	1! 0	0
Volume Module:												
Base Vol:	1	30	4	216	30	169	258	43	4	1	47	315
Growth Adj:	1.00	1.00	1.00	1.00	1.00	1.00	1.00	1.00	1.00	1.00	1.00	1.00
Initial Bse:	1	30	4	216	30	169	258	43	4	1	47	315
Added Vol:	0	0	0	0	0	65	29	0	0	0	0	0
PasserByVol:	0	0	0	0	0	0	0	0	0	0	0	0
Initial Fut:	1	30	4	216	30	234	287	43	4	1	47	315
User Adj:	1.00	1.00	1.00	1.00	1.00	1.00	1.00	1.00	1.00	1.00	1.00	1.00
PHF Adj:	0.95	0.95	0.95	0.95	0.95	0.95	0.95	0.95	0.95	0.95	0.95	0.95
PHF Volume:	1	32	4	227	32	246	302	45	4	1	49	332
Reduct Vol:	0	0	0	0	0	0	0	0	0	0	0	0
Reduced Vol:	1	32	4	227	32	246	302	45	4	1	49	332
PCE Adj:	1.00	1.00	1.00	1.00	1.00	1.00	1.00	1.00	1.00	1.00	1.00	1.00
MLF Adj:	1.00	1.00	1.00	1.00	1.00	1.00	1.00	1.00	1.00	1.00	1.00	1.00
FinalVolume:	1	32	4	227	32	246	302	45	4	1	49	332
Saturation Flow Module:												
Adjustment:	1.00	1.00	1.00	1.00	1.00	1.00	1.00	1.00	1.00	1.00	1.00	1.00
Lanes:	0.03	0.86	0.11	0.45	0.06	0.49	0.86	0.13	0.01	0.01	0.13	0.86
Final Sat.:	12	360	48	272	38	294	464	70	6	2	78	521
Capacity Analysis Module:												
Vol/Sat:	0.09	0.09	0.09	0.84	0.84	0.84	0.65	0.65	0.65	0.64	0.64	0.64
Crit Moves:			****		****		****			****		
Delay/Veh:	10.6	10.6	10.6	29.7	29.7	29.7	19.3	19.3	19.3	17.1	17.1	17.1
Delay Adj:	1.00	1.00	1.00	1.00	1.00	1.00	1.00	1.00	1.00	1.00	1.00	1.00
AdjDel/Veh:	10.6	10.6	10.6	29.7	29.7	29.7	19.3	19.3	19.3	17.1	17.1	17.1
LOS by Move:	B	B	B	D	D	D	C	C	C	C	C	C
ApproachDel:	10.6			29.7			19.3			17.1		
Delay Adj:	1.00			1.00			1.00			1.00		
ApprAdjDel:	10.6			29.7			19.3			17.1		
LOS by Appr:	B			D			C			C		
AllWayAvgQ:	0.1	0.1	0.1	3.5	3.5	3.5	1.5	1.5	1.5	1.4	1.4	1.4

Note: Queue reported is the number of cars per lane.

Level Of Service Computation Report
2000 HCM Unsignalized Method (Future Volume Alternative)

Intersection #218 SR76 & Brittain Rd

Average Delay (sec/veh): 0.1 Worst Case Level Of Service: C[20.5]

Street Name:	Brittain Rd						SR76					
Approach:	North Bound			South Bound			East Bound			West Bound		
Movement:	L	T	R	L	T	R	L	T	R	L	T	R
Control:	Stop Sign			Stop Sign			Uncontrolled			Uncontrolled		
Rights:	Include			Include			Include			Include		
Lanes:	0 0	0 0	0	0 0	1! 0	0	0 1	0 0	0	0 0	0 1	0
Volume Module:												
Base Vol:	0	0	0	1	0	1	5	557	0	0	659	5
Growth Adj:	1.00	1.00	1.00	1.00	1.00	1.00	1.00	1.00	1.00	1.00	1.00	1.00
Initial Bse:	0	0	0	1	0	1	5	557	0	0	659	5
Added Vol:	0	0	0	0	0	0	0	19	0	0	42	0
PasserByVol:	0	0	0	0	0	0	0	0	0	0	0	0
Initial Fut:	0	0	0	1	0	1	5	576	0	0	701	5
User Adj:	1.00	1.00	1.00	1.00	1.00	1.00	1.00	1.00	1.00	1.00	1.00	1.00
PHF Adj:	0.95	0.95	0.95	0.95	0.95	0.95	0.95	0.95	0.95	0.95	0.95	0.95
PHF Volume:	0	0	0	1	0	1	5	606	0	0	738	5
Reduct Vol:	0	0	0	0	0	0	0	0	0	0	0	0
FinalVolume:	0	0	0	1	0	1	5	606	0	0	738	5
Critical Gap Module:												
Critical Gp:	xxxxx	xxxx	xxxxx	6.4	6.5	6.2	4.1	xxxx	xxxxx	xxxxx	xxxx	xxxxx
FollowUpTim:	xxxxx	xxxx	xxxxx	3.5	4.0	3.3	2.2	xxxx	xxxxx	xxxxx	xxxx	xxxxx
Capacity Module:												
Cnflict Vol:	xxxx	xxxx	xxxxx	1357	1357	741	743	xxxx	xxxxx	xxxx	xxxx	xxxxx
Potent Cap.:	xxxx	xxxx	xxxxx	164	149	416	864	xxxx	xxxxx	xxxx	xxxx	xxxxx
Move Cap.:	xxxx	xxxx	xxxxx	163	148	416	864	xxxx	xxxxx	xxxx	xxxx	xxxxx
Volume/Cap:	xxxx	xxxx	xxxx	0.01	0.00	0.00	0.01	xxxx	xxxx	xxxx	xxxx	xxxx
Level Of Service Module:												
2Way95thQ:	xxxx	xxxx	xxxxx	xxxx	xxxx	xxxxx	0.0	xxxx	xxxxx	xxxx	xxxx	xxxxx
Control Del:	xxxxx	xxxx	xxxxx	xxxxx	xxxx	xxxxx	9.2	xxxx	xxxxx	xxxxx	xxxx	xxxxx
LOS by Move:	*	*	*	*	*	*	A	*	*	*	*	*
Movement:	LT -	LTR -	RT	LT -	LTR -	RT	LT -	LTR -	RT	LT -	LTR -	RT
Shared Cap.:	xxxx	xxxx	xxxxx	xxxx	235	xxxxx	xxxx	xxxx	xxxxx	xxxx	xxxx	xxxxx
SharedQueue:	xxxxx	xxxx	xxxxx	xxxxx	0.0	xxxxx	0.0	xxxx	xxxxx	xxxxx	xxxx	xxxxx
Shrd ConDel:	xxxxx	xxxx	xxxxx	xxxxx	20.5	xxxxx	9.2	xxxx	xxxxx	xxxxx	xxxx	xxxxx
Shared LOS:	*	*	*	*	C	*	A	*	*	*	*	*
ApproachDel:	xxxxxx			20.5			xxxxxx			xxxxxx		
ApproachLOS:	*			C			*			*		

Note: Queue reported is the number of cars per lane.

```
------------------------------------------------------------------------------
------------------------------------------------------------------------------
                       Level Of Service Computation Report
           2000 HCM Unsignalized Method (Future Volume Alternative)
******************************************************************************
Intersection #219 SR76 & E. Pala Mission Rd
******************************************************************************
Average Delay (sec/veh):     79.9       Worst Case Level Of Service: F[600.1]
******************************************************************************
Street Name:         E. Pala Mission Rd                     SR76
Approach:      North Bound      South Bound       East Bound       West Bound
Movement:     L  -  T  -  R    L  -  T  -  R    L  -  T  -  R    L  -  T  -  R
------------|---------------||---------------||---------------||---------------|
Control:        Stop Sign        Stop Sign       Uncontrolled     Uncontrolled
Rights:           Include          Include          Include          Include
Lanes:        0  0  0  0  0    0  0  1! 0  0    0  1  0  0  0    0  0  0  1  0
------------|---------------||---------------||---------------||---------------|
Volume Module:
Base Vol:       0    0     0   243    0     4     3  568     0     0  690   286
Growth Adj:  1.00 1.00  1.00  1.00 1.00  1.00  1.00 1.00  1.00  1.00 1.00  1.00
Initial Bse:    0    0     0   243    0     4     3  568     0     0  690   286
Added Vol:      0    0     0     0    0     0     0   19     0     0   42     0
PasserByVol:    0    0     0     0    0     0     0    0     0     0    0     0
Initial Fut:    0    0     0   243    0     4     3  587     0     0  732   286
User Adj:    1.00 1.00  1.00  1.00 1.00  1.00  1.00 1.00  1.00  1.00 1.00  1.00
PHF Adj:     0.95 0.95  0.95  0.95 0.95  0.95  0.95 0.95  0.95  0.95 0.95  0.95
PHF Volume:     0    0     0   256    0     4     3  618     0     0  771   301
Reduct Vol:     0    0     0     0    0     0     0    0     0     0    0     0
FinalVolume:    0    0     0   256    0     4     3  618     0     0  771   301
------------|---------------||---------------||---------------||---------------|
Critical Gap Module:
Critical Gp:xxxxx xxxx xxxxx   6.4  6.5   6.2   4.1 xxxx xxxxx xxxxx xxxx xxxxx
FollowUpTim:xxxxx xxxx xxxxx   3.5  4.0   3.3   2.2 xxxx xxxxx xxxxx xxxx xxxxx
------------|---------------||---------------||---------------||---------------|
Capacity Module:
Cnflict Vol: xxxx xxxx xxxxx  1565 1565   941  1082 xxxx xxxxx  xxxx xxxx xxxxx
Potent Cap.: xxxx xxxx xxxxx   123  111   319   645 xxxx xxxxx  xxxx xxxx xxxxx
Move Cap.:   xxxx xxxx xxxxx   120  109   314   639 xxxx xxxxx  xxxx xxxx xxxxx
Volume/Cap:  xxxx xxxx  xxxx  2.13 0.00  0.01  0.00 xxxx  xxxx  xxxx xxxx  xxxx
------------|---------------||---------------||---------------||---------------|
Level Of Service Module:
2Way95thQ:   xxxx xxxx xxxxx  xxxx xxxx xxxxx   0.0 xxxx xxxxx  xxxx xxxx xxxxx
Control Del:xxxxx xxxx xxxxx xxxxx xxxx xxxxx  10.7 xxxx xxxxx xxxxx xxxx xxxxx
LOS by Move:    *    *     *     *    *     *     B     *     *     *    *     *
Movement:     LT - LTR - RT    LT - LTR - RT    LT - LTR - RT    LT - LTR - RT
Shared Cap.: xxxx xxxx xxxxx  xxxx  121 xxxxx  xxxx xxxx xxxxx  xxxx xxxx xxxxx
SharedQueue:xxxxx xxxx xxxxx xxxxx 21.8 xxxxx   0.0 xxxx xxxxx xxxxx xxxx xxxxx
Shrd ConDel:xxxxx xxxx xxxxx xxxxx  600 xxxxx  10.7 xxxx xxxxx xxxxx xxxx xxxxx
Shared LOS:     *    *     *     *    F     *     B     *     *     *    *     *
ApproachDel:    xxxxxx            600.1           xxxxxx           xxxxxx
ApproachLOS:         *                F                *                *
******************************************************************************
Note: Queue reported is the number of cars per lane.
******************************************************************************
```



```
------------------------------------------------------------------------------
------------------------------------------------------------------------------
                       Level Of Service Computation Report
           2000 HCM Unsignalized Method (Future Volume Alternative)
******************************************************************************
Intersection #220 SR76 & Lilac Rd
******************************************************************************
Average Delay (sec/veh):      9.2       Worst Case Level Of Service: F[167.6]
******************************************************************************
Street Name:             Lilac Rd                           SR76
Approach:      North Bound      South Bound       East Bound       West Bound
Movement:     L  -  T  -  R    L  -  T  -  R    L  -  T  -  R    L  -  T  -  R
------------|---------------||---------------||---------------||---------------|
Control:        Stop Sign        Stop Sign       Uncontrolled     Uncontrolled
Rights:           Include          Include          Include          Include
Lanes:        0  0  1! 0  0    0  0  0  0  0    0  0  0  1  0    0  1  0  0  0
------------|---------------||---------------||---------------||---------------|
Volume Module:
Base Vol:      46    0    40     0    0     0     0  759    46    45  899     0
Growth Adj:  1.00 1.00  1.00  1.00 1.00  1.00  1.00 1.00  1.00  1.00 1.00  1.00
Initial Bse:   46    0    40     0    0     0     0  759    46    45  899     0
Added Vol:     15    0     0     0    0     0     0   12     7     0   27     0
PasserByVol:    0    0     0     0    0     0     0    0     0     0    0     0
Initial Fut:   61    0    40     0    0     0     0  771    53    45  926     0
User Adj:    1.00 1.00  1.00  1.00 1.00  1.00  1.00 1.00  1.00  1.00 1.00  1.00
PHF Adj:     0.95 0.95  0.95  0.95 0.95  0.95  0.95 0.95  0.95  0.95 0.95  0.95
PHF Volume:    64    0    42     0    0     0     0  812    56    47  975     0
Reduct Vol:     0    0     0     0    0     0     0    0     0     0    0     0
FinalVolume:   64    0    42     0    0     0     0  812    56    47  975     0
------------|---------------||---------------||---------------||---------------|
Critical Gap Module:
Critical Gp:  6.4  6.5   6.2 xxxxx xxxx xxxxx xxxxx xxxx xxxxx   4.1 xxxx xxxxx
FollowUpTim:  3.5  4.0   3.3 xxxxx xxxx xxxxx xxxxx xxxx xxxxx   2.2 xxxx xxxxx
------------|---------------||---------------||---------------||---------------|
Capacity Module:
Cnflict Vol: 1909 1909   839  xxxx xxxx xxxxx  xxxx xxxx xxxxx   867 xxxx xxxxx
Potent Cap.:   75   68   365  xxxx xxxx xxxxx  xxxx xxxx xxxxx   776 xxxx xxxxx
Move Cap.:     71   64   365  xxxx xxxx xxxxx  xxxx xxxx xxxxx   776 xxxx xxxxx
Volume/Cap:  0.90 0.00  0.12  xxxx xxxx  xxxx  xxxx xxxx  xxxx  0.06 xxxx  xxxx
------------|---------------||---------------||---------------||---------------|
Level Of Service Module:
2Way95thQ:   xxxx xxxx xxxxx  xxxx xxxx xxxxx  xxxx xxxx xxxxx   0.2 xxxx xxxxx
Control Del:xxxxx xxxx xxxxx xxxxx xxxx xxxxx xxxxx xxxx xxxxx   9.9 xxxx xxxxx
LOS by Move:    *    *     *     *    *     *     *     *     *     A     *     *
Movement:     LT - LTR - RT    LT - LTR - RT    LT - LTR - RT    LT - LTR - RT
Shared Cap.: xxxx  105 xxxxx  xxxx xxxx xxxxx  xxxx xxxx xxxxx  xxxx xxxx xxxxx
SharedQueue:xxxxx  6.4 xxxxx xxxxx xxxx xxxxx xxxxx xxxx xxxxx   0.2 xxxx xxxxx
Shrd ConDel:xxxxx  168 xxxxx xxxxx xxxx xxxxx xxxxx xxxx xxxxx   9.9 xxxx xxxxx
Shared LOS:     *    F     *     *    *     *     *     *     *     A     *     *
ApproachDel:    167.6            xxxxxx           xxxxxx           xxxxxx
ApproachLOS:         F                *                *                *
******************************************************************************
Note: Queue reported is the number of cars per lane.
******************************************************************************
```

```
------------------------------------------------------------------------------
------------------------------------------------------------------------------
                       Level Of Service Computation Report
           2000 HCM Unsignalized Method (Future Volume Alternative)
******************************************************************************
Intersection #221 SR76 & Adams Dr
******************************************************************************
Average Delay (sec/veh):      0.7       Worst Case Level Of Service: D[ 33.9]
******************************************************************************
Street Name:             Adams Dr                          SR76
Approach:      North Bound      South Bound       East Bound       West Bound
Movement:     L  -  T  -  R    L  -  T  -  R    L  -  T  -  R    L  -  T  -  R
------------|---------------||---------------||---------------||---------------|
Control:        Stop Sign        Stop Sign       Uncontrolled     Uncontrolled
Rights:           Include          Include          Include          Include
Lanes:        0  0  1! 0  0    0  0  1! 0  0    0  1  0  0  0    0  0  0  1  0
------------|---------------||---------------||---------------||---------------|
Volume Module:
Base Vol:       0    0     0    10    0    14    31  645     0     0  923    20
Growth Adj:  1.00 1.00  1.00  1.00 1.00  1.00  1.00 1.00  1.00  1.00 1.00  1.00
Initial Bse:    0    0     0    10    0    14    31  645     0     0  923    20
Added Vol:      0    0     0     0    0     0     0   11     0     0   26     0
PasserByVol:    0    0     0     0    0     0     0    0     0     0    0     0
Initial Fut:    0    0     0    10    0    14    31  656     0     0  949    20
User Adj:    1.00 1.00  1.00  1.00 1.00  1.00  1.00 1.00  1.00  1.00 1.00  1.00
PHF Adj:     0.95 0.95  0.95  0.95 0.95  0.95  0.95 0.95  0.95  0.95 0.95  0.95
PHF Volume:     0    0     0    11    0    15    33  691     0     0  999    21
Reduct Vol:     0    0     0     0    0     0     0    0     0     0    0     0
FinalVolume:    0    0     0    11    0    15    33  691     0     0  999    21
------------|---------------||---------------||---------------||---------------|
Critical Gap Module:
Critical Gp:  7.1  6.5   6.2   6.4  6.5   6.2   4.1 xxxx xxxxx xxxxx xxxx xxxxx
FollowUpTim:  3.5  4.0   3.3   3.5  4.0   3.3   2.2 xxxx xxxxx xxxxx xxxx xxxxx
------------|---------------||---------------||---------------||---------------|
Capacity Module:
Cnflict Vol: 1773 1776   691  1765 1765  1009  1020 xxxx xxxxx  xxxx xxxx xxxxx
Potent Cap.:   65   83   445    92   84   291   680 xxxx xxxxx  xxxx xxxx xxxxx
Move Cap.:     59   79   445    89   80   291   680 xxxx xxxxx  xxxx xxxx xxxxx
Volume/Cap:  0.00 0.00  0.00  0.12 0.00  0.05  0.05 xxxx  xxxx  xxxx xxxx  xxxx
------------|---------------||---------------||---------------||---------------|
Level Of Service Module:
2Way95thQ:   xxxx xxxx xxxxx  xxxx xxxx xxxxx   0.2 xxxx xxxxx  xxxx xxxx xxxxx
Control Del:xxxxx xxxx xxxxx xxxxx xxxx xxxxx  10.6 xxxx xxxxx xxxxx xxxx xxxxx
LOS by Move:    *    *     *     *    *     *     B     *     *     *    *     *
Movement:     LT - LTR - RT    LT - LTR - RT    LT - LTR - RT    LT - LTR - RT
Shared Cap.: xxxx    0 xxxxx  xxxx  149 xxxxx  xxxx xxxx xxxxx  xxxx xxxx xxxxx
SharedQueue:xxxxx xxxx xxxxx xxxxx  0.6 xxxxx   0.2 xxxx xxxxx xxxxx xxxx xxxxx
Shrd ConDel:xxxxx xxxx xxxxx xxxxx 33.9 xxxxx  10.6 xxxx xxxxx xxxxx xxxx xxxxx
Shared LOS:     *    *     *     *     D     *     B     *     *     *    *     *
ApproachDel:    xxxxxx             33.9            xxxxxx            xxxxxx
ApproachLOS:         *                D                 *                 *
******************************************************************************
Note: Queue reported is the number of cars per lane.
******************************************************************************
```



```
------------------------------------------------------------------------------
------------------------------------------------------------------------------
                       Level Of Service Computation Report
           2000 HCM Unsignalized Method (Future Volume Alternative)
******************************************************************************
Intersection #222 SR76 & Cole Grade Rd
******************************************************************************
Average Delay (sec/veh):    125.9       Worst Case Level Of Service: F[1027.4]
******************************************************************************
Street Name:          Cole Grade Rd                        SR76
Approach:      North Bound      South Bound       East Bound       West Bound
Movement:     L  -  T  -  R    L  -  T  -  R    L  -  T  -  R    L  -  T  -  R
------------|---------------||---------------||---------------||---------------|
Control:        Stop Sign        Stop Sign       Uncontrolled     Uncontrolled
Rights:           Include          Include          Include          Include
Lanes:        0  0  1! 0  0    0  0  0  1  0    0  0  1! 0  0    0  0  1! 0  0
------------|---------------||---------------||---------------||---------------|
Volume Module:
Base Vol:     154    5    71     0    2     5     2  557   210    73  802     4
Growth Adj:  1.00 1.00  1.00  1.00 1.00  1.00  1.00 1.00  1.00  1.00 1.00  1.00
Initial Bse:  154    5    71     0    2     5     2  557   210    73  802     4
Added Vol:      2    0     0     0    0     3     1    3     1     0    6     0
PasserByVol:    0    0     0     0    0     0     0    0     0     0    0     0
Initial Fut:  156    5    71     0    2     8     3  560   211    73  808     4
User Adj:    1.00 1.00  1.00  1.00 1.00  1.00  1.00 1.00  1.00  1.00 1.00  1.00
PHF Adj:     0.95 0.95  0.95  0.95 0.95  0.95  0.95 0.95  0.95  0.95 0.95  0.95
PHF Volume:   164    5    75     0    2     8     3  589   222    77  851     4
Reduct Vol:     0    0     0     0    0     0     0    0     0     0    0     0
FinalVolume:  164    5    75     0    2     8     3  589   222    77  851     4
------------|---------------||---------------||---------------||---------------|
Critical Gap Module:
Critical Gp:  7.1  6.5   6.2 xxxxx  6.5   6.2   4.1 xxxx xxxxx   4.1 xxxx xxxxx
FollowUpTim:  3.5  4.0   3.3 xxxxx  4.0   3.3   2.2 xxxx xxxxx   2.2 xxxx xxxxx
------------|---------------||---------------||---------------||---------------|
Capacity Module:
Cnflict Vol: 1738 1735   721  xxxx 1844   873   865 xxxx xxxxx   822 xxxx xxxxx
Potent Cap.:   68   88   428  xxxx   75   350   778 xxxx xxxxx   808 xxxx xxxxx
Move Cap.:     59   77   420  xxxx   66   344   772 xxxx xxxxx   801 xxxx xxxxx
Volume/Cap:  2.79 0.07  0.18  xxxx 0.03  0.02  0.00 xxxx  xxxx  0.10 xxxx  xxxx
------------|---------------||---------------||---------------||---------------|
Level Of Service Module:
2Way95thQ:   xxxx xxxx xxxxx  xxxx xxxx xxxxx   0.0 xxxx xxxxx   0.3 xxxx xxxxx
Control Del:xxxxx xxxx xxxxx xxxxx xxxx xxxxx   9.7 xxxx xxxxx  10.0 xxxx xxxxx
LOS by Move:    *    *     *     *    *     *     A     *     *     A    *     *
Movement:     LT - LTR - RT    LT - LTR - RT    LT - LTR - RT    LT - LTR - RT
Shared Cap.: xxxx   80 xxxxx  xxxx xxxx   187  xxxx xxxx xxxxx  xxxx xxxx xxxxx
SharedQueue:xxxxx 24.2 xxxxx xxxxx xxxx   0.2 xxxxx xxxx xxxxx xxxxx xxxx xxxxx
Shrd ConDel:xxxxx 1027 xxxxx xxxxx xxxx  25.4 xxxxx xxxx xxxxx xxxxx xxxx xxxxx
Shared LOS:     *    F     *     *    *     D     *    *     *     *    *     *
ApproachDel:   1027.4             25.4            xxxxxx            xxxxxx
ApproachLOS:         F                D                 *                 *
******************************************************************************
Note: Queue reported is the number of cars per lane.
******************************************************************************
```

APPENDIX G

EXCERPTS FROM
COUNTY GP, STATE ROUTE 76 MIDDLE, STATE ROUTE 76 EAST

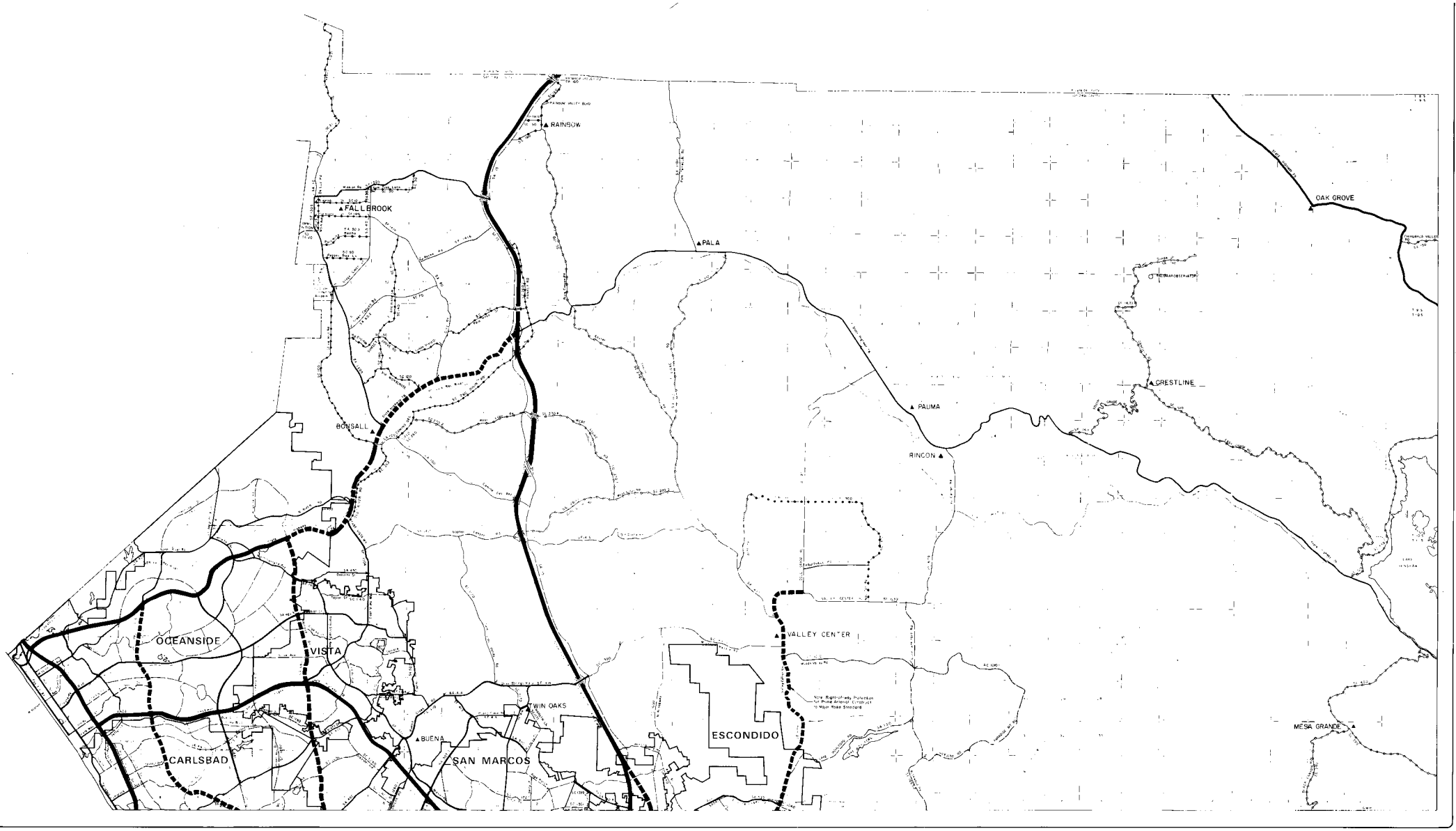

CIRCULATION ELEMENT

SAN DIEGO COUNTY GENERAL PLAN

PREPARED BY
COUNTY OF SAN DIEGO
DEPARTMENT OF PUBLIC WORKS
MAPPING SECTION

I, HEREBY CERTIFY THIS TO BE A TRUE COPY OF DOCUMENT NO. 757986 AS FOUND IN THE OFFICE OF THE SAN DIEGO COUNTY CLERK OF THE BOARD

10-12-93 Lloyd R. Jacobs
Date Deputy Clerk of the Board

0 2000 4000 6000 12000 18000 20000 24000 28000 32000 36000 40000 44000 48000
0 1 mi. 2 mi. 3 mi. 4 mi. 5 mi. 6 mi. 7 mi. 8 mi. 9 mi.

CERTIFICATE OF ADOPTION

I hereby certify that this, a Sheet 2 of 9 of the Circulation Element of the San Diego County General Plan as amended by General Plan Amendment (GPA 93-01, Item 1), and that it was approved by the San Diego County Planning Commission on the 29th day of November, 1992.

David Kohler — Commission Chair
Attest: Leann M. Wojciechowski — Commission Secretary

Hereby certify that this is Sheet 2 of 9 of the Circulation Element of the San Diego County General Plan, as amended by General Plan Amendment (GPA 93-01, Item 1), and that it was adopted by the San Diego County Board of Supervisors on the 29th day of March, 1993.

Dianne Jacob — Board Chair
Attest: Thomas J. Pastoralski — Clerk of the Board

Adopted				
Eight Amendment	(7%)	June 22, 1983	Ninth Amendment	GPA 88-01 May 11, 1988
Revised Amendment	(1%)	Oct 17, 1983	Twelfth Amendment	GPA 88-01 Dec 13, 1988
Third Amendment	(2%)	May 16, 1984	Fourteenth Amendment	GPA 88-01 Sep 13, 1989
Fourth Amendment	GPA 79-03	Oct. 15, 1984	Fifteenth Amendment	GPA 88-01 Oct 17, 1989
Fifth Amendment	GPA 83-01	Dec 12, 1984	Sixteenth Amendment	GPA 88-01 Sep 12, 1990
Sixth Amendment	GPA 83-02	Nov 13, 1985	Seventeen Amendment	GPA 88-01 Mar. 6, 1991
Seventh Amendment	GPA 82-03	July 21, 1987	Twenty-one Amendment	GPA 90-01 Dec 14, 1992
Eight Amendment	GPA 82-04	Dec 1, 1988	Supplement Amendment	GPA no ref Nov 24, 1993
Ninth Amendment	GPA 83-03	Dec 14, 1988		

LEGEND:

FREEWAYS	[illegible]
FREEWAYS	[illegible]
EXPRESSWAYS	[illegible]
PRIME ARTERIALS	[illegible]
MAJOR ROADS	[illegible]
RECREATIONAL PARKWAYS	[illegible]
COLLECTOR ROADS	[illegible]
RURAL COLLECTORS	[illegible]
RURAL LIGHT COLLECTORS	[illegible]
LIGHT COLLECTORS	[illegible]
RURAL MOUNTAIN ROADS	[illegible]
JURISDICTIONAL BOUNDARIES	[illegible]

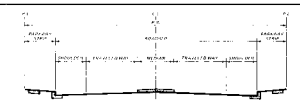

CORRIDOR CLASSIFICATION	MEDIAN	TRAVELED WAY	SHOULDER	PARKWAY STRIP	ROADWAY	R/W
EXPRESSWAY	34'	36'	10'	10'	126'	146'
PRIME ARTERIAL	18'	36'	8'	10'	108'	126'
MAJOR ROAD	18'	24'	8'	10'	82'	102'
COLLECTOR ROAD	NA	24'	8'	10'	84'	94'
RURAL COLLECTOR	NA	12'	8'	22'	40'	84'
RURAL LIGHT COLLECTOR	NA	12'	8'	10'	40'	60'
LIGHT COLLECTOR	NA	12'	8'	10'	40'	60'
RECREATIONAL PARKWAY	NA	12'	8'	36'	40'	100'
RURAL MOUNTAIN ROAD	NA	12'	8'	20'	40'	160'

NOTE: Alternate Routes for Circulation Element Sheet 1 - Check right-of-way of the FUTURE CORRIDORS PROVIDING and the RESERVED ROUTES for consistency of the San Diego County General Plan - 1989

SHEET 2 of 9

PROPOSED CIRCULATION ELEMENT EXPLANATORY NOTE

This is a Public Hearing Map. It is not formally approved as official Transportation Corridor Zone Element. Quality map, and as a Public Information and Planning Tool. It is not a formal Zoning Map. It is not a formal Subdivision Map. It is not a formal Land Use Map. The Planning Commission and Board of Supervisors will be the final authority on the location of future roadways.

Line widths shown are for map clarity and are not to scale.

Corridors shown are for any of four degrees of precision of alignment:

1. Centerline definitely set and not subject to further movement.
2. Centerline generally set but subject only to minor changes.
3. Centerline generally set but subject only to final design changes.
4. Centerline is Planning Alignment only. Will require further study and subject to Planning changes.

Centerline not shown and shown only schematically to show a functional need.

Requests concerning the precise alignment of specific corridors in the San Diego County Department of Public Works for consideration of Planning Commission Public Hearing. Public Hearing is only based on this map.

NOTE: Rural roadway corridors and Rural Scenic Roads may be specified by the Planning Commission for information purposes only. Please contact Public Hearing Commission if you are in the Rural Area and are considering a Rural Scenic Road.

PENDLETON DE ORT 1	RAINBOW/PALOMAR 2	SORRENTO/DOUTILLO 3
NORTH METRO/ESCONDIDO 4	LAGUNA/GARRISO 5	
SOUTH METRO/JAMUL 6	CAMPO/JACUMBA 7	

RAINBOW/PALOMAR

American Recovery and Reinvestment Act

State Route 76

CALIFORNIA DEPARTMENT OF TRANSPORTATION

STATE ROUTE 76 PROJECT – MELROSE DRIVE TO SOUTH MISSION ROAD

FACT SHEET – APRIL 2010

The Project

State Route 76 will be expanded to include a four-lane conventional highway that can accommodate widening to six lanes, from Melrose Drive in Oceanside to South Mission Road in the unincorporated community of Bonsall.

The Need

Population growth along the SR-76 corridor will likely double the traffic volume from approximately 30,000 average daily trips to more than 60,000 average daily trips by the year 2030. The collision rate also meets or exceeds the statewide average compared to similar two-lane routes. The project would reduce the potential for collisions in the future.

Jobs

Construction of SR-76 from Melrose Drive to South Mission Road will generate jobs for the San Diego Region and California.

Partnership

The project is developed through a partnership with the California Department of Transportation (Caltrans), the Federal Highway Administration (FHWA) and the San Diego Association of Governments.

Project Status

The Environmental Document was approved in November 2008. Construction is planned to begin January 2010. Caltrans will make use of the design sequencing process, which involves designing portions of the project as construction is underway on other portions, saving time and money.

Project Costs

The estimated project cost is $171.4 million. Funding sources include $65.5 million from the American Reinvestment and Recovery Act and $16.8 million from Federal Demonstration. State funds are contributing $13.5 million and the TransNet sales tax measure approved by San Diego County voters in 2004 is contributing $75.6 million.

Project Schedule

Start Construction: January 2010
Complete: December 2012

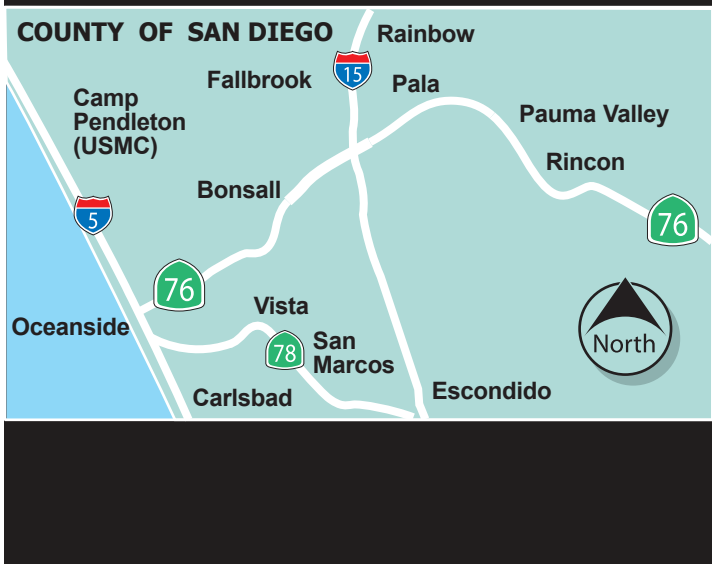

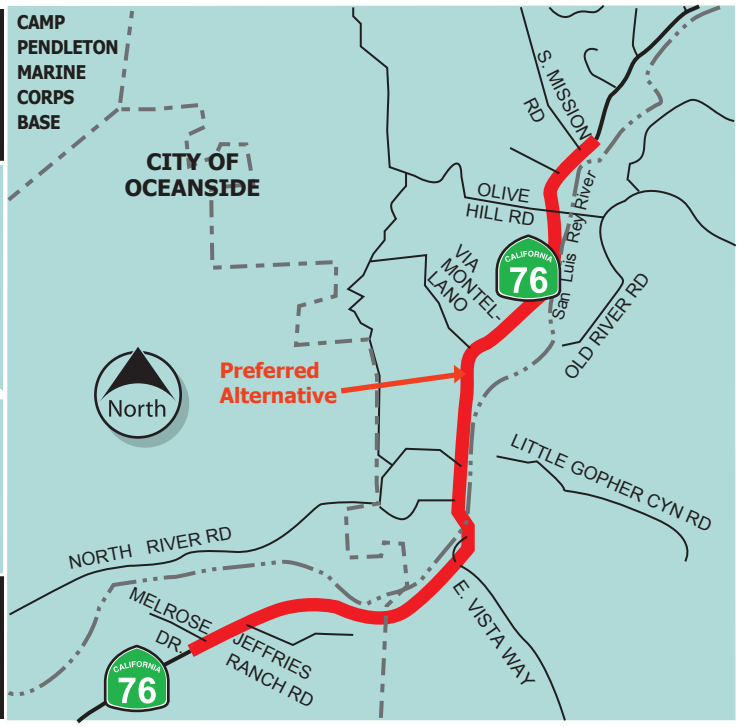

September 2010

State Route 76 East

South Mission Road to Interstate 15

FACT SHEET

GOALS

Relieve existing and future traffic congestion; improve motorist safety; and minimize environmental impacts

FUNDING

The current project estimate is $201 million. Anticipated funding for the project includes the TransNet Sales Tax Measure approved by San Diego County voters in November 2004, gas tax revenues from the State Transportation Improvements Program (STIP), and federal and local funds.

CONTACT

Project Manager
Ann Fox at
(619) 718-7853
or by e-mail at
Ann.Fox@dot.ca.gov

Department of Transportation
4050 Taylor Street
San Diego, CA 92110
Ph: (619) 688-6670
Fax: (619) 688-3695
www.dot.ca.gov/dist11

THE PROJECT

The current proposal is to develop a four-lane conventional highway from South Mission Road to just east of Interstate 15 (I-15) as well as widen and improve the SR-76/I-15 interchange. Project alternatives currently being developed include a range of alternatives both north and south of the San Luis Rey River.

ENVIRONMENTAL CONCERNS

The widening and realigning of SR-76 will present numerous environmental challenges. Potential concerns include increased noise, neighborhood disruption, change of community character and possible business displacements. Other environmental concerns are the possible loss of biological resources including riparian habitat, wetlands, endangered species and impacts to public parks, recreation areas, wildlife and waterfowl refuges and historic and archaeological sites. There is also the potential for floodplain encroachment, the taking of agricultural land and visual impacts due to cuts, fills, and structures. Studies to determine the extent and severity of the impacts to these resources began in Spring 2007 and the draft environmental document is available for review. Construction is scheduled to begin in 2012.

TRAFFIC

The current traffic volume on SR-76 between South Mission Road and I-15 is approximately 25,000 average daily trips. Planned growth will increase the traffic volume to approximately 50,000 average daily trips by the year 2035. Within the study limits, a transportation project will need to be implemented to safely and efficiently handle the traffic increase. Rail transit is not planned for the corridor.

APPENDIX H

SIGNAL WARRANTS

Figure 4C-103 (CA). Traffic Signal Warrants Worksheet (Average Traffic Estimate Form)

11	SD	SR76	R23.0
DIST	CO	RTE	PM

COUNT DATE 10/22/2009
CALC RXP DATE 12/20/2010
CHK _____ DATE _____

Major St: State Route 76 — Critical Approach Speed 55 mph
Minor St: Warner Ranch Project Driveway — Critical Approach Speed 30 mph

Speed limit or critical speed on major street traffic > 64 km/h (40 mph)..... ☐ or
In built up area of isolated community of < 10,000 population..... ☒
} **RURAL (R)**
☐ **URBAN (U)**

(Based on Estimated Average Daily Traffic - See Note)

URBAN..... RURAL.....X.....

CONDITION A - Minimum Vehicular Volume

Satisfied X Not Satisfied _____

Number of lanes for moving traffic on each approach

Major Street	Minor Street	Vehicles Per Day on Major Street (Total of Both Approaches) Urban	Rural	Vehicles Per Day on Higher-Volume Minor Street Approach (One Direction Only) Urban	Rural
1	1	8,000	5,600	2,400	1,680
2 or More X	1 X	9,600	6,720	2,400	1,680
2 or More	2 or More	9,600	6,720	3,200	2,240
1	2 or More	8,000	5,600	3,200	2,240

CONDITION B - Interruption of Continuous Traffic

Satisfied X Not Satisfied _____

Number of lanes for moving traffic on each approach

Major Street	Minor Street	Vehicles Per Day on Major Street (Total of Both Approaches) Urban	Rural	Vehicles Per Day on Higher-Volume Minor Street Approach (One Direction Only) Urban	Rural
1	1	12,000	8,400	1,200	850
2 or More X	1 X	14,400	10,080	1,200	850
2 or More	2 or More	14,400	10,080	1,600	1,120
1	2 or More	12,000	8,400	1,600	1,120

Combination of CONDITIONS A + B

Satisfied X Not Satisfied _____

No one condition satisfied, but following conditions fulfilled 80% or more..... _____ A _____ B

Minimum Requirements EADT	
2 CONDITIONS 80%	2 CONDITIONS 80%

Note: To be used only for NEW INTERSECTIONS or other locations where it is not reasonable to count actual traffic volumes.

The satisfaction of a traffic signal warrant or warrants shall not in itself require the installation of a traffic control signal.

Figure 4C-101 (CA). Traffic Signal Warrants Worksheet (Sheet 2 of 4)

WARRANT 3 - Peak Hour **SATISFIED YES ☒ NO ☐**
(Part A or Part B must be satisfied)

PART A **SATISFIED YES ☒ NO ☐**
(All parts 1, 2, and 3 below must be satisfied for the same one hour, for any four consecutive 15-minute periods)

1. The total delay experienced by traffic on one minor street approach (one direction only) controlled by a STOP sign equals or exceeds four vehicle-hours for a one-lane approach, or five vehicle-hours for a two-lane approach; AND	Yes ☒ No ☐
2. The volume on the same minor street approach (one direction only) equals or exceeds 100 vph for one moving lane of traffic or 150 vph for two moving lanes; AND	Yes ☒ No ☐
3. The total entering volume serviced during the hour equals or exceeds 800 vph for intersections with four or more approaches or 650 vph for intersections with three approaches.	Yes ☒ No ☐

PART B **SATISFIED YES ☒ NO ☐**

APPROACH LANES	One	2 or More	16:00 Hour
Both Approaches - Major Street	x		1,850
Higher Approach - Minor Street	x		224

The plotted point falls above the applicable curve in Figure 4C-3. (URBAN AREAS)	Yes ☐ No ☐
OR, The plotted point falls above the applicable curve in Figure 4C-4. (RURAL AREAS)	Yes ☒ No ☐

The satisfaction of a traffic signal warrant or warrants shall not in itself require the installation of a traffic control signal.

State Route 76 & Rice Canyon Road
Existing Volume With Cumulative With Project (Signal Warrants)

Figure 4C-3. Warrant 3, Peak Hour

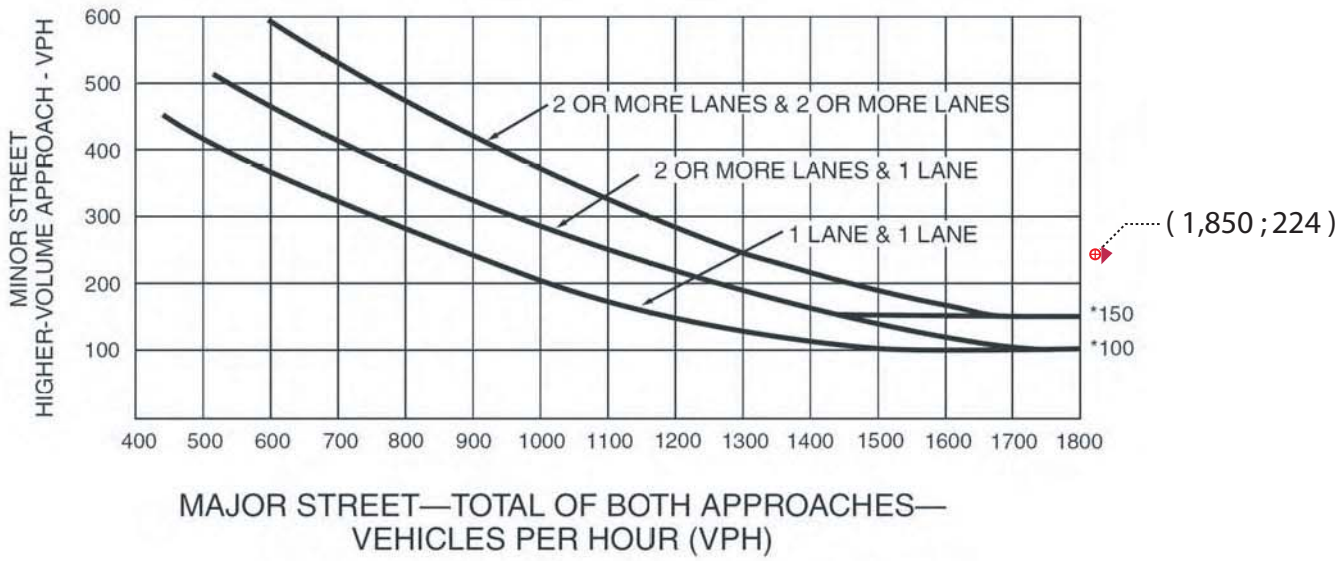

*Note: 150 vph applies as the lower threshold volume for a minor-street approach with two or more lanes and 100 vph applies as the lower threshold volume for a minor-street approach with one lane.

Figure 4C-4. Warrant 3, Peak Hour (70% Factor)

(COMMUNITY LESS THAN 10,000 POPULATION OR ABOVE ~~70~~ 64 km/h OR ABOVE 40 mph ON MAJOR STREET)

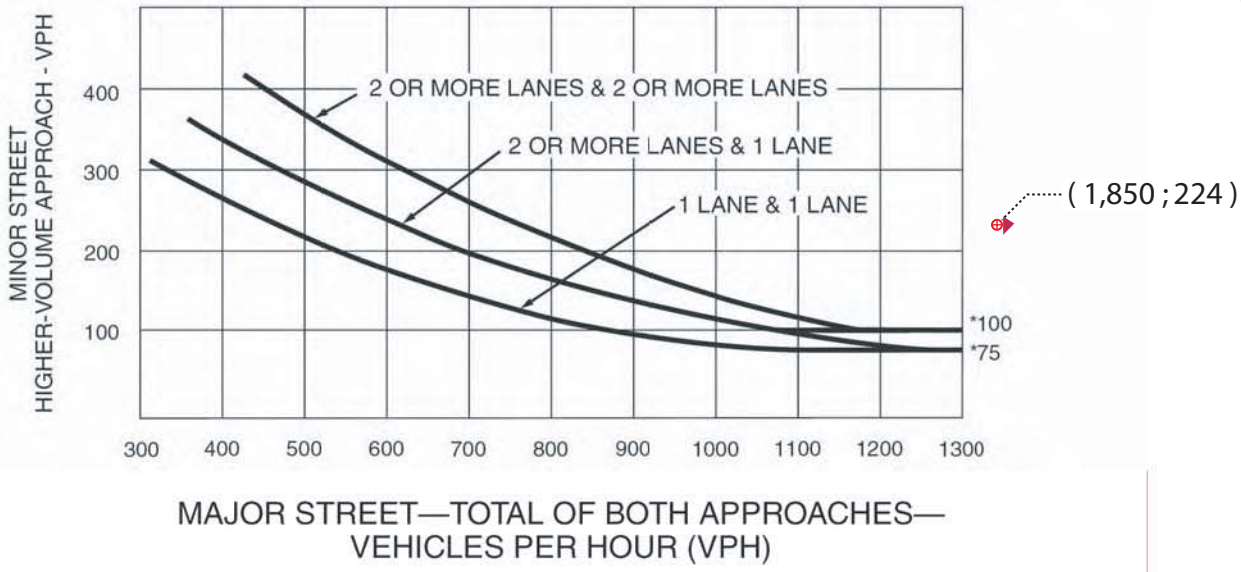

*Note: 100 vph applies as the lower threshold volume for a minor-street approach with two or more lanes and 75 vph applies as the lower threshold volume for a minor-street approach with one lane.

APPENDIX I

PEAK HOUR INTERSECTION ANALYSIS WORKSHEETS DIRECT & CUMULATIVE MITIGATION CONDITIONS

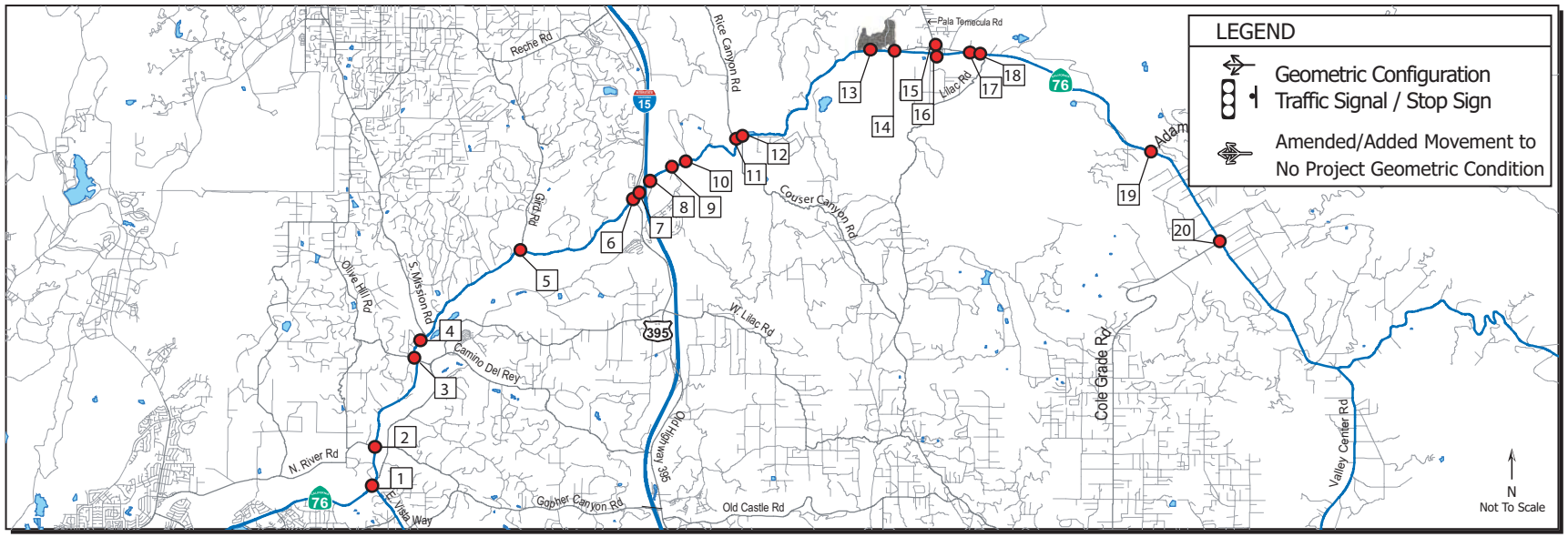

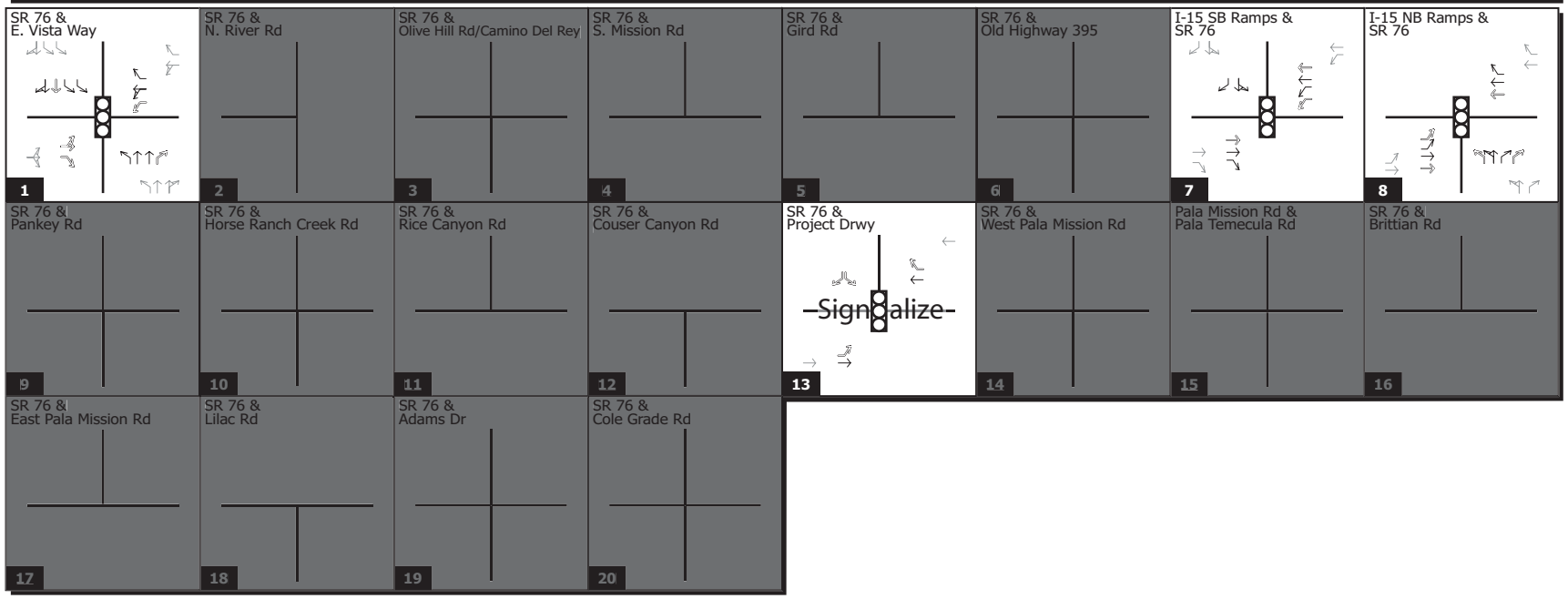

Direct Impact Mitigation Geometric Configurations

Level Of Service Computation Report
2000 HCM Operations Method (Future Volume Alternative)

Intersection #201 SR76 & Vista Way

Cycle (sec):	120	Critical Vol./Cap.(X):	0.662
Loss Time (sec):	16	Average Delay (sec/veh):	39.2
Optimal Cycle:	67	Level Of Service:	D

Street Name:	SR76									Vista Way					
Approach:	North Bound			South Bound			East Bound			West Bound		
Movement:	L	T	R	L	T	R	L	T	R	L	T	R
Control:	Protected			Protected			Protected			Protected		
Rights:	Include			Include			Include			Include		
Min. Green:	5	5	5	5	5	5	5	5	5	5	5	5
Y+R:	4.0	4.0	4.0	4.0	4.0	4.0	4.0	4.0	4.0	4.0	4.0	4.0
Lanes:	1 0	2 0	1	2 0	1 1	0	0 1	0 0	1	1 1	0 0	1
Volume Module:												
Base Vol:	36	543	292	304	841	10	7	162	215	284	26	293
Growth Adj:	1.00	1.00	1.00	1.00	1.00	1.00	1.00	1.00	1.00	1.00	1.00	1.00
Initial Bse:	36	543	292	304	841	10	7	162	215	284	26	293
Added Vol:	1	7	0	5	19	0	0	1	1	0	1	2
PasserByVol:	0	0	0	0	0	0	0	0	0	0	0	0
Initial Fut:	37	550	292	309	860	10	7	163	216	284	27	295
User Adj:	1.00	1.00	1.00	1.00	1.00	1.00	1.00	1.00	1.00	1.00	1.00	1.00
PHF Adj:	0.95	0.95	0.95	0.95	0.95	0.95	0.95	0.95	0.95	0.95	0.95	0.95
PHF Volume:	39	579	307	325	905	11	7	172	227	299	28	311
Reduct Vol:	0	0	0	0	0	0	0	0	0	0	0	0
Reduced Vol:	39	579	307	325	905	11	7	172	227	299	28	311
PCE Adj:	1.00	1.00	1.00	1.00	1.00	1.00	1.00	1.00	1.00	1.00	1.00	1.00
MLF Adj:	1.00	1.00	1.00	1.00	1.00	1.00	1.00	1.00	1.00	1.00	1.00	1.00
FinalVolume:	39	579	307	325	905	11	7	172	227	299	28	311
Saturation Flow Module:												
Sat/Lane:	1900	1900	1900	1900	1900	1900	1900	1900	1900	1900	1900	1900
Adjustment:	0.93	0.93	0.83	0.90	0.93	0.93	0.98	0.98	0.83	0.94	0.94	0.83
Lanes:	1.00	2.00	1.00	2.00	1.98	0.02	0.04	0.96	1.00	1.83	0.17	1.00
Final Sat.:	1769	3538	1583	3432	3490	41	77	1782	1583	3251	309	1583
Capacity Analysis Module:												
Vol/Sat:	0.02	0.16	0.19	0.09	0.26	0.26	0.10	0.10	0.14	0.09	0.09	0.20
Crit Moves:	****				****		****					****
Green/Cycle:	0.04	0.29	0.29	0.14	0.39	0.39	0.14	0.27	0.27	0.17	0.29	0.29
Volume/Cap:	0.53	0.57	0.67	0.67	0.67	0.67	0.67	0.36	0.54	0.54	0.31	0.67
Uniform Del:	56.3	36.3	37.7	48.9	30.4	30.4	48.7	35.7	37.7	45.4	33.0	37.3
IncremntDel:	7.0	0.8	3.9	3.7	1.3	1.3	6.4	0.5	1.4	1.0	0.2	3.7
InitQueuDel:	0.0	0.0	0.0	0.0	0.0	0.0	0.0	0.0	0.0	0.0	0.0	0.0
Delay Adj:	1.00	1.00	1.00	1.00	1.00	1.00	1.00	1.00	1.00	1.00	1.00	1.00
Delay/Veh:	63.4	37.1	41.6	52.6	31.7	31.7	55.0	36.2	39.1	46.4	33.2	41.0
User DelAdj:	1.00	1.00	1.00	1.00	1.00	1.00	1.00	1.00	1.00	1.00	1.00	1.00
AdjDel/Veh:	63.4	37.1	41.6	52.6	31.7	31.7	55.0	36.2	39.1	46.4	33.2	41.0
LOS by Move:	E	D	D	D	C	C	E	D	D	D	C	D
HCM2k95thQ:	4	18	20	13	27	27	14	10	14	12	9	20

Level Of Service Computation Report
2000 HCM Operations Method (Future Volume Alternative)

Intersection #207 SR76 & I-15 SB Ramps

Cycle (sec):	120	Critical Vol./Cap.(X):	0.538
Loss Time (sec):	12	Average Delay (sec/veh):	29.5
Optimal Cycle:	90	Level Of Service:	C

Street Name:	I-15 SB Ramps									SR76		
Approach:	North Bound			South Bound			East Bound			West Bound		
Movement:	L	T	R	L	T	R	L	T	R	L	T	R
Control:	Split Phase			Split Phase			Protected			Protected		
Rights:	Include			Include			Include			Include		
Min. Green:	5	5	5	5	5	5	5	5	5	5	5	5
Y+R:	4.0	4.0	4.0	4.0	4.0	4.0	4.0	4.0	4.0	4.0	4.0	4.0
Lanes:	0 0	0 0	0	1 1	0 0	2	0 0	2 0	1	2 0	2 0	0
Volume Module:PM Peak												
Base Vol:	0	0	0	79	4	558	0	518	329	78	243	0
Growth Adj:	1.00	1.00	1.00	1.00	1.00	1.00	1.00	1.00	1.00	1.00	1.00	1.00
Initial Bse:	0	0	0	79	4	558	0	518	329	78	243	0
Added Vol:	0	0	0	4	0	0	0	20	0	101	51	0
PasserByVol:	0	0	0	0	0	0	0	0	0	0	0	0
Initial Fut:	0	0	0	83	4	558	0	538	329	179	294	0
User Adj:	1.00	1.00	1.00	1.00	1.00	1.00	1.00	1.00	1.00	1.00	1.00	1.00
PHF Adj:	0.95	0.95	0.95	0.95	0.95	0.95	0.95	0.95	0.95	0.95	0.95	0.95
PHF Volume:	0	0	0	87	4	587	0	566	346	188	309	0
Reduct Vol:	0	0	0	0	0	0	0	0	0	0	0	0
Reduced Vol:	0	0	0	87	4	587	0	566	346	188	309	0
PCE Adj:	1.00	1.00	1.00	1.00	1.00	1.00	1.00	1.00	1.00	1.00	1.00	1.00
MLF Adj:	1.00	1.00	1.00	1.00	1.00	1.00	1.00	1.00	1.00	1.00	1.00	1.00
FinalVolume:	0	0	0	87	4	587	0	566	346	188	309	0
Saturation Flow Module:												
Sat/Lane:	1900	1900	1900	1900	1900	1900	1900	1900	1900	1900	1900	1900
Adjustment:	1.00	1.00	1.00	0.96	0.96	0.73	1.00	0.93	0.83	0.90	0.93	1.00
Lanes:	0.00	0.00	0.00	1.91	0.09	2.00	0.00	2.00	1.00	2.00	2.00	0.00
Final Sat.:	0	0	0	3485	168	2786	0	3538	1583	3432	3538	0
Capacity Analysis Module:												
Vol/Sat:	0.00	0.00	0.00	0.03	0.03	0.21	0.00	0.16	0.22	0.05	0.09	0.00
Crit Moves:						****			****	****		
Green/Cycle:	0.00	0.00	0.00	0.39	0.39	0.39	0.00	0.41	0.41	0.10	0.34	0.00
Volume/Cap:	0.00	0.00	0.00	0.06	0.06	0.54	0.00	0.39	0.54	0.54	0.25	0.00
Uniform Del:	0.0	0.0	0.0	22.8	22.8	28.1	0.0	25.2	27.1	51.2	28.3	0.0
IncremntDel:	0.0	0.0	0.0	0.0	0.0	0.5	0.0	0.2	0.9	1.7	0.1	0.0
InitQueuDel:	0.0	0.0	0.0	0.0	0.0	0.0	0.0	0.0	0.0	0.0	0.0	0.0
Delay Adj:	0.00	0.00	0.00	1.00	1.00	1.00	0.00	1.00	1.00	1.00	1.00	0.00
Delay/Veh:	0.0	0.0	0.0	22.8	22.8	28.7	0.0	25.4	28.0	52.9	28.4	0.0
User DelAdj:	1.00	1.00	1.00	1.00	1.00	1.00	1.00	1.00	1.00	1.00	1.00	1.00
AdjDel/Veh:	0.0	0.0	0.0	22.8	22.8	28.7	0.0	25.4	28.0	52.9	28.4	0.0
LOS by Move:	A	A	A	C	C	C	A	C	C	D	C	A
HCM2k95thQ:	0	0	0	2	2	18	0	14	17	7	8	0

Level Of Service Computation Report
2000 HCM Operations Method (Future Volume Alternative)

Intersection #208 SR76 & I-15 NB Ramps

Cycle (sec):	100	Critical Vol./Cap.(X):	0.322
Loss Time (sec):	12	Average Delay (sec/veh):	25.9
Optimal Cycle:	90	Level Of Service:	C

Street Name:	I-15 NB Ramps							SR76					
Approach:	North Bound			South Bound			East Bound			West Bound			
Movement:	L	T	R	L	T	R	L	T	R	L	T	R	
Control:	Split Phase			Split Phase			Protected			Protected			
Rights:	Include			Include			Include			Include			
Min. Green:	5	5	5	5	5	5	5	5	5	5	5	5	
Y+R:	4.0	4.0	4.0	4.0	4.0	4.0	4.0	4.0	4.0	4.0	4.0	4.0	
Lanes:	1 1	0	0 2	0	0	0 0	2	0	2 0 0	0	0	2 0 1	
Volume Module:	PM Peak												
Base Vol:	137	1	124	0	0	0	401	201	0	0	176	59	
Growth Adj:	1.00	1.00	1.00	1.00	1.00	1.00	1.00	1.00	1.00	1.00	1.00	1.00	
Initial Bse:	137	1	124	0	0	0	401	201	0	0	176	59	
Added Vol:	0	0	41	0	0	0	0	24	0	0	152	10	
PasserByVol:	0	0	0	0	0	0	0	0	0	0	0	0	
Initial Fut:	137	1	165	0	0	0	401	225	0	0	328	69	
User Adj:	1.00	1.00	1.00	1.00	1.00	1.00	1.00	1.00	1.00	1.00	1.00	1.00	
PHF Adj:	0.95	0.95	0.95	0.95	0.95	0.95	0.95	0.95	0.95	0.95	0.95	0.95	
PHF Volume:	144	1	174	0	0	0	422	237	0	0	345	73	
Reduct Vol:	0	0	0	0	0	0	0	0	0	0	0	0	
Reduced Vol:	144	1	174	0	0	0	422	237	0	0	345	73	
PCE Adj:	1.00	1.00	1.00	1.00	1.00	1.00	1.00	1.00	1.00	1.00	1.00	1.00	
MLF Adj:	1.00	1.00	1.00	1.00	1.00	1.00	1.00	1.00	1.00	1.00	1.00	1.00	
FinalVolume:	144	1	174	0	0	0	422	237	0	0	345	73	
Saturation Flow Module:													
Sat/Lane:	1900	1900	1900	1900	1900	1900	1900	1900	1900	1900	1900	1900	
Adjustment:	0.91	0.91	0.73	1.00	1.00	1.00	0.90	0.93	1.00	1.00	0.93	0.83	
Lanes:	1.99	0.01	2.00	0.00	0.00	0.00	2.00	2.00	0.00	0.00	2.00	1.00	
Final Sat.:	3446	25	2786	0	0	0	3432	3538	0	0	3538	1583	
Capacity Analysis Module:													
Vol/Sat:	0.04	0.04	0.06	0.00	0.00	0.00	0.12	0.07	0.00	0.00	0.10	0.05	
Crit Moves:			****				****				****		
Green/Cycle:	0.19	0.19	0.19	0.00	0.00	0.00	0.38	0.39	0.00	0.00	0.30	0.30	
Volume/Cap:	0.22	0.22	0.32	0.00	0.00	0.00	0.32	0.17	0.00	0.00	0.32	0.15	
Uniform Del:	33.9	33.9	34.6	0.0	0.0	0.0	21.7	19.8	0.0	0.0	26.9	25.4	
IncremntDel:	0.2	0.2	0.3	0.0	0.0	0.0	0.1	0.1	0.0	0.0	0.2	0.1	
InitQueuDel:	0.0	0.0	0.0	0.0	0.0	0.0	0.0	0.0	0.0	0.0	0.0	0.0	
Delay Adj:	1.00	1.00	1.00	0.00	0.00	0.00	1.00	1.00	0.00	0.00	1.00	1.00	
Delay/Veh:	34.1	34.1	35.0	0.0	0.0	0.0	21.9	19.8	0.0	0.0	27.1	25.6	
User DelAdj:	1.00	1.00	1.00	1.00	1.00	1.00	1.00	1.00	1.00	1.00	1.00	1.00	
AdjDel/Veh:	34.1	34.1	35.0	0.0	0.0	0.0	21.9	19.8	0.0	0.0	27.1	25.6	
LOS by Move:	C	C	C	A	A	A	C	B	A	A	C	C	
HCM2k95thQ:	4	4	6	0	0	0	9	5	0	0	9	3	

Level Of Service Computation Report
2000 HCM Operations Method (Future Volume Alternative)

Intersection #201 SR76 & Vista Way

Cycle (sec): 120 | Critical Vol./Cap.(X): 0.890
Loss Time (sec): 16 | Average Delay (sec/veh): 44.9
Optimal Cycle: 124 | Level Of Service: D

Street Name:	SR76						Vista Way					
Approach:	North Bound			South Bound			East Bound			West Bound		
Movement:	L -	T -	R	L -	T -	R	L -	T -	R	L -	T -	R
Control:	Protected			Protected			Protected			Protected		
Rights:	Include			Include			Include			Include		
Min. Green:	5	5	5	5	5	5	5	5	5	5	5	5
Y+R:	4.0	4.0	4.0	4.0	4.0	4.0	4.0	4.0	4.0	4.0	4.0	4.0
Lanes:	1	0	2	0	1	2	0	1	1	0	0	1	0	0	1	1	1	0	0	1
Volume Module:												
Base Vol:	91	976	224	494	727	20	4	57	62	231	75	425
Growth Adj:	1.00	1.00	1.00	1.00	1.00	1.00	1.00	1.00	1.00	1.00	1.00	1.00
Initial Bse:	91	976	224	494	727	20	4	57	62	231	75	425
Added Vol:	2	22	0	3	10	0	0	1	1	0	2	6
PasserByVol:	0	0	0	0	0	0	0	0	0	0	0	0
Initial Fut:	93	998	224	497	737	20	4	58	63	231	77	431
User Adj:	1.00	1.00	1.00	1.00	1.00	1.00	1.00	1.00	1.00	1.00	1.00	1.00
PHF Adj:	0.95	0.95	0.95	0.95	0.95	0.95	0.95	0.95	0.95	0.95	0.95	0.95
PHF Volume:	98	1051	236	523	776	21	4	61	66	243	81	454
Reduct Vol:	0	0	0	0	0	0	0	0	0	0	0	0
Reduced Vol:	98	1051	236	523	776	21	4	61	66	243	81	454
PCE Adj:	1.00	1.00	1.00	1.00	1.00	1.00	1.00	1.00	1.00	1.00	1.00	1.00
MLF Adj:	1.00	1.00	1.00	1.00	1.00	1.00	1.00	1.00	1.00	1.00	1.00	1.00
FinalVolume:	98	1051	236	523	776	21	4	61	66	243	81	454
Saturation Flow Module:												
Sat/Lane:	1900	1900	1900	1900	1900	1900	1900	1900	1900	1900	1900	1900
Adjustment:	0.93	0.93	0.83	0.90	0.93	0.93	0.98	0.98	0.83	0.94	0.94	0.83
Lanes:	1.00	2.00	1.00	2.00	1.95	0.05	0.06	0.94	1.00	1.50	0.50	1.00
Final Sat.:	1769	3538	1583	3432	3431	93	120	1737	1583	2692	897	1583
Capacity Analysis Module:												
Vol/Sat:	0.06	0.30	0.15	0.15	0.23	0.23	0.04	0.04	0.04	0.09	0.09	0.29
Crit Moves:		****		****			****					****
Green/Cycle:	0.10	0.33	0.33	0.17	0.40	0.40	0.04	0.12	0.12	0.25	0.32	0.32
Volume/Cap:	0.56	0.89	0.45	0.89	0.56	0.56	0.84	0.31	0.36	0.36	0.28	0.89
Uniform Del:	51.6	38.0	31.4	48.7	27.5	27.5	57.1	48.7	49.0	37.3	30.4	38.7
IncremntDel:	4.0	8.9	0.6	15.8	0.5	0.5	53.5	0.8	1.2	0.3	0.1	17.7
InitQueuDel:	0.0	0.0	0.0	0.0	0.0	0.0	0.0	0.0	0.0	0.0	0.0	0.0
Delay Adj:	1.00	1.00	1.00	1.00	1.00	1.00	1.00	1.00	1.00	1.00	1.00	1.00
Delay/Veh:	55.6	46.8	32.0	64.5	28.0	28.0	110.6	49.5	50.3	37.6	30.5	56.5
User DelAdj:	1.00	1.00	1.00	1.00	1.00	1.00	1.00	1.00	1.00	1.00	1.00	1.00
AdjDel/Veh:	55.6	46.8	32.0	64.5	28.0	28.0	110.6	49.5	50.3	37.6	30.5	56.5
LOS by Move:	E	D	C	E	C	C	F	D	D	D	C	E
HCM2k95thQ:	8	38	13	23	22	22	9	5	5	10	9	33

Level Of Service Computation Report
2000 HCM Operations Method (Future Volume Alternative)

Intersection #207 SR76 & I-15 SB Ramps

Cycle (sec): 120 | Critical Vol./Cap.(X): 0.594
Loss Time (sec): 12 | Average Delay (sec/veh): 27.5
Optimal Cycle: 90 | Level Of Service: C

Street Name:	I-15 SB Ramps						SR76					
Approach:	North Bound			South Bound			East Bound			West Bound		
Movement:	L -	T -	R	L -	T -	R	L -	T -	R	L -	T -	R
Control:	Split Phase			Split Phase			Protected			Protected		
Rights:	Include			Include			Include			Include		
Min. Green:	5	5	5	5	5	5	5	5	5	5	5	5
Y+R:	4.0	4.0	4.0	4.0	4.0	4.0	4.0	4.0	4.0	4.0	4.0	4.0
Lanes:	0	0	0	0	0	1	1	0	0	2	0	0	2	0	1	2	0	2	0	0
Volume Module:PM Peak												
Base Vol:	0	0	0	93	8	500	0	892	290	149	524	0
Growth Adj:	1.00	1.00	1.00	1.00	1.00	1.00	1.00	1.00	1.00	1.00	1.00	1.00
Initial Bse:	0	0	0	93	8	500	0	892	290	149	524	0
Added Vol:	0	0	0	12	0	0	0	60	0	53	27	0
PasserByVol:	0	0	0	0	0	0	0	0	0	0	0	0
Initial Fut:	0	0	0	105	8	500	0	952	290	202	551	0
User Adj:	1.00	1.00	1.00	1.00	1.00	1.00	1.00	1.00	1.00	1.00	1.00	1.00
PHF Adj:	0.95	0.95	0.95	0.95	0.95	0.95	0.95	0.95	0.95	0.95	0.95	0.95
PHF Volume:	0	0	0	111	8	526	0	1002	305	213	580	0
Reduct Vol:	0	0	0	0	0	0	0	0	0	0	0	0
Reduced Vol:	0	0	0	111	8	526	0	1002	305	213	580	0
PCE Adj:	1.00	1.00	1.00	1.00	1.00	1.00	1.00	1.00	1.00	1.00	1.00	1.00
MLF Adj:	1.00	1.00	1.00	1.00	1.00	1.00	1.00	1.00	1.00	1.00	1.00	1.00
FinalVolume:	0	0	0	111	8	526	0	1002	305	213	580	0
Saturation Flow Module:												
Sat/Lane:	1900	1900	1900	1900	1900	1900	1900	1900	1900	1900	1900	1900
Adjustment:	1.00	1.00	1.00	1.00	0.95	0.95	0.73	1.00	0.93	0.83	0.90	0.93	1.00
Lanes:	0.00	0.00	0.00	1.86	0.14	2.00	0.00	2.00	1.00	2.00	2.00	0.00
Final Sat.:	0	0	0	3370	257	2786	0	3538	1583	3432	3538	0
Capacity Analysis Module:												
Vol/Sat:	0.00	0.00	0.00	0.03	0.03	0.19	0.00	0.28	0.19	0.06	0.16	0.00
Crit Moves:						****		****		****		
Green/Cycle:	0.00	0.00	0.00	0.32	0.32	0.32	0.00	0.48	0.48	0.10	0.46	0.00
Volume/Cap:	0.00	0.00	0.00	0.10	0.10	0.59	0.00	0.59	0.40	0.59	0.35	0.00
Uniform Del:	0.0	0.0	0.0	28.8	28.8	34.4	0.0	22.9	20.3	51.3	20.6	0.0
IncremntDel:	0.0	0.0	0.0	0.0	0.0	1.1	0.0	0.6	0.4	2.7	0.1	0.0
InitQueuDel:	0.0	0.0	0.0	0.0	0.0	0.0	0.0	0.0	0.0	0.0	0.0	0.0
Delay Adj:	0.00	0.00	0.00	1.00	1.00	1.00	0.00	1.00	1.00	1.00	1.00	0.00
Delay/Veh:	0.0	0.0	0.0	28.9	28.9	35.5	0.0	23.4	20.7	54.0	20.8	0.0
User DelAdj:	1.00	1.00	1.00	1.00	1.00	1.00	1.00	1.00	1.00	1.00	1.00	1.00
AdjDel/Veh:	0.0	0.0	0.0	28.9	28.9	35.5	0.0	23.4	20.7	54.0	20.8	0.0
LOS by Move:	A	A	A	C	C	D	A	C	C	D	C	A
HCM2k95thQ:	0	0	0	3	3	18	0	24	13	8	13	0

Level Of Service Computation Report
2000 HCM Operations Method (Future Volume Alternative)

Intersection #208 SR76 & I-15 NB Ramps

Cycle (sec): 100 | Critical Vol./Cap.(X): 0.513
Loss Time (sec): 12 | Average Delay (sec/veh): 27.9
Optimal Cycle: 90 | Level Of Service: C

Street Name:	I-15 NB Ramps						SR76					
Approach:	North Bound			South Bound			East Bound			West Bound		
Movement:	L	T	R	L	T	R	L	T	R	L	T	R
Control:	Split Phase			Split Phase			Protected			Protected		
Rights:	Include			Include			Include			Include		
Min. Green:	5	5	5	5	5	5	5	5	5	5	5	5
Y+R:	4.0	4.0	4.0	4.0	4.0	4.0	4.0	4.0	4.0	4.0	4.0	4.0
Lanes:	1 1	0	0 2	0	0	0 0 0	2	0	2 0 0	0	0	2 0 1
Volume Module:	PM Peak											
Base Vol:	352	6	162	0	0	0	719	210	0	0	324	92
Growth Adj:	1.00	1.00	1.00	1.00	1.00	1.00	1.00	1.00	1.00	1.00	1.00	1.00
Initial Bse:	352	6	162	0	0	0	719	210	0	0	324	92
Added Vol:	0	0	119	0	0	0	0	72	0	0	80	5
PasserByVol:	0	0	0	0	0	0	0	0	0	0	0	0
Initial Fut:	352	6	281	0	0	0	719	282	0	0	404	97
User Adj:	1.00	1.00	1.00	1.00	1.00	1.00	1.00	1.00	1.00	1.00	1.00	1.00
PHF Adj:	0.95	0.95	0.95	0.95	0.95	0.95	0.95	0.95	0.95	0.95	0.95	0.95
PHF Volume:	371	6	296	0	0	0	757	297	0	0	425	102
Reduct Vol:	0	0	0	0	0	0	0	0	0	0	0	0
Reduced Vol:	371	6	296	0	0	0	757	297	0	0	425	102
PCE Adj:	1.00	1.00	1.00	1.00	1.00	1.00	1.00	1.00	1.00	1.00	1.00	1.00
MLF Adj:	1.00	1.00	1.00	1.00	1.00	1.00	1.00	1.00	1.00	1.00	1.00	1.00
FinalVolume:	371	6	296	0	0	0	757	297	0	0	425	102
Saturation Flow Module:												
Sat/Lane:	1900	1900	1900	1900	1900	1900	1900	1900	1900	1900	1900	1900
Adjustment:	0.90	0.90	0.73	1.00	1.00	1.00	0.90	0.93	1.00	1.00	0.93	0.83
Lanes:	1.97	0.03	2.00	0.00	0.00	0.00	2.00	2.00	0.00	0.00	2.00	1.00
Final Sat.:	3358	57	2786	0	0	0	3432	3538	0	0	3538	1583
Capacity Analysis Module:												
Vol/Sat:	0.11	0.11	0.11	0.00	0.00	0.00	0.22	0.08	0.00	0.00	0.12	0.06
Crit Moves:	****						****				****	
Green/Cycle:	0.22	0.22	0.22	0.00	0.00	0.00	0.43	0.42	0.00	0.00	0.23	0.23
Volume/Cap:	0.51	0.51	0.49	0.00	0.00	0.00	0.51	0.20	0.00	0.00	0.51	0.28
Uniform Del:	34.6	34.6	34.4	0.0	0.0	0.0	20.8	18.6	0.0	0.0	33.3	31.3
IncremntDel:	0.6	0.6	0.6	0.0	0.0	0.0	0.3	0.1	0.0	0.0	0.5	0.4
InitQueuDel:	0.0	0.0	0.0	0.0	0.0	0.0	0.0	0.0	0.0	0.0	0.0	0.0
Delay Adj:	1.00	1.00	1.00	0.00	0.00	0.00	1.00	1.00	0.00	0.00	1.00	1.00
Delay/Veh:	35.2	35.2	35.1	0.0	0.0	0.0	21.1	18.6	0.0	0.0	33.9	31.7
User DelAdj:	1.00	1.00	1.00	1.00	1.00	1.00	1.00	1.00	1.00	1.00	1.00	1.00
AdjDel/Veh:	35.2	35.2	35.1	0.0	0.0	0.0	21.1	18.6	0.0	0.0	33.9	31.7
LOS by Move:	D	D	D	A	A	A	C	B	A	A	C	C
HCM2k95thQ:	11	11	10	0	0	0	16	6	0	0	12	5

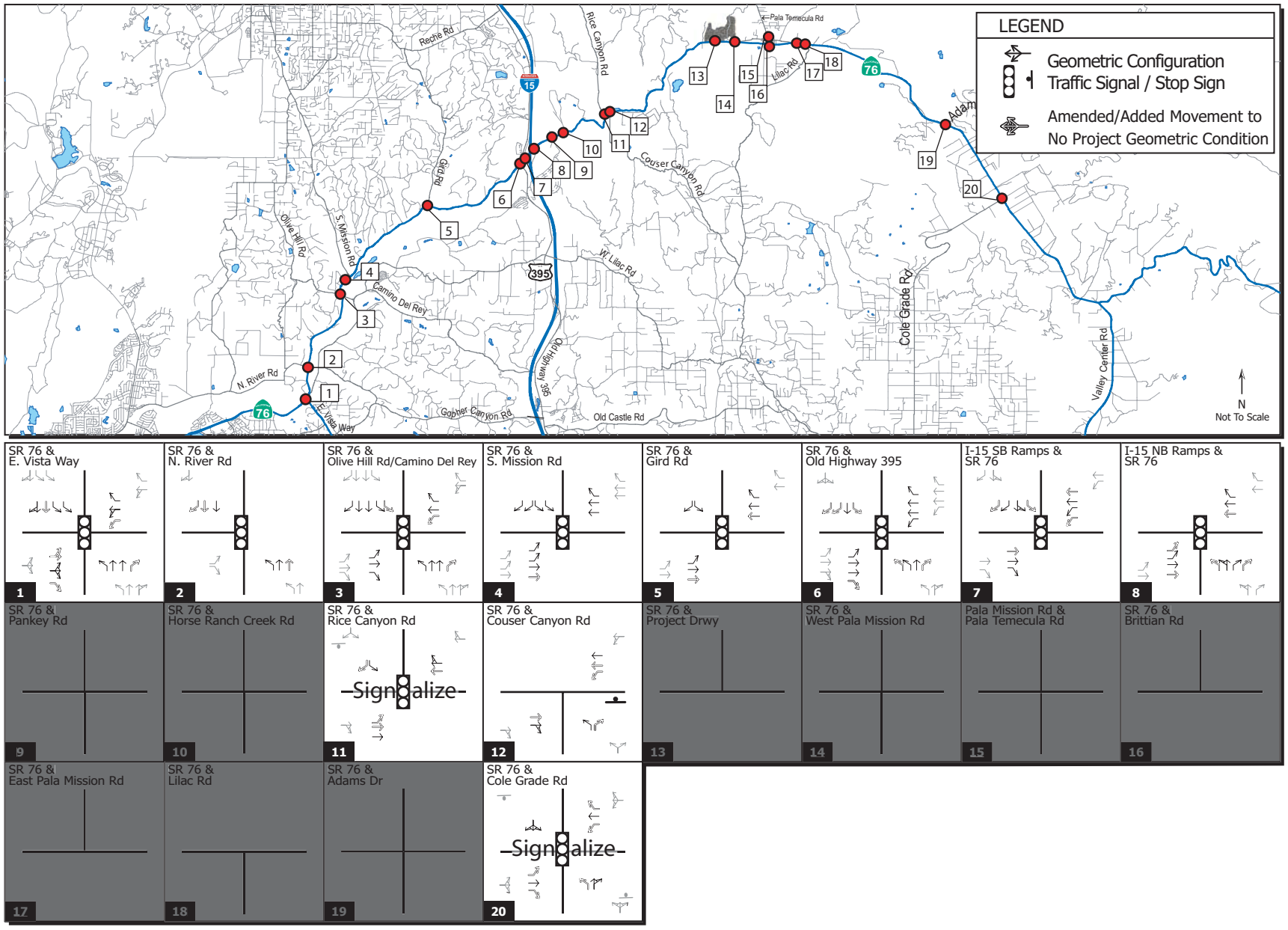

Cumulative Mitigation Geometric Configuration

Mitigation

Level Of Service Computation Report
2000 HCM Operations Method (Future Volume Alternative)

Intersection #201 SR76 & Vista Way

Cycle (sec): 160 | Critical Vol./Cap.(X): 0.982
Loss Time (sec): 16 | Average Delay (sec/veh): 57.8
Optimal Cycle: OPTIMIZED | Level Of Service: E

Street Name:	SR76								Vista Way							
Approach:	North Bound				South Bound				East Bound				West Bound			
Movement:	L	-	T	-	R	L	-	T	-	R	L	-	T	-	R	L	-	T	-	R
Control:	Protected					Protected					Protected					Protected				
Rights:	Include					Include					Include					Include				
Min. Green:	5	5	5			5	5	5			5	5	5			5	5	5		
Y+R:	4.0	4.0	4.0			4.0	4.0	4.0			4.0	4.0	4.0			4.0	4.0	4.0		
Lanes:	1	0	2	0	1	2	0	1	1	0	0	1	1!	0	1	1	1	0	0	1
Volume Module:																				
Base Vol:	80	1099	404			321	1689	24			9	194	286			335	29	308		
Growth Adj:	1.00	1.00	1.00			1.00	1.00	1.00			1.00	1.00	1.00			1.00	1.00	1.00		
Initial Bse:	80	1099	404			321	1689	24			9	194	286			335	29	308		
Added Vol:	1	7	0			5	19	0			0	1	1			0	1	2		
PasserByVol:	0	0	0			0	0	0			0	0	0			0	0	0		
Initial Fut:	81	1106	404			326	1708	24			9	195	287			335	30	310		
User Adj:	1.00	1.00	1.00			1.00	1.00	1.00			1.00	1.00	1.00			1.00	1.00	1.00		
PHF Adj:	0.95	0.95	0.95			0.95	0.95	0.95			0.95	0.95	0.95			0.95	0.95	0.95		
PHF Volume:	85	1164	425			343	1798	25			9	205	302			353	32	326		
Reduct Vol:	0	0	0			0	0	0			0	0	0			0	0	0		
Reduced Vol:	85	1164	425			343	1798	25			9	205	302			353	32	326		
PCE Adj:	1.00	1.00	1.00			1.00	1.00	1.00			1.00	1.00	1.00			1.00	1.00	1.00		
MLF Adj:	1.00	1.00	1.00			1.00	1.00	1.00			1.00	1.00	1.00			1.00	1.00	1.00		
FinalVolume:	85	1164	425			343	1798	25			9	205	302			353	32	326		
Saturation Flow Module:																				
Sat/Lane:	1900	1900	1900			1900	1900	1900			1900	1900	1900			1900	1900	1900		
Adjustment:	0.93	0.93	0.83			0.90	0.93	0.93			0.85	0.85	0.85			0.94	0.94	0.83		
Lanes:	1.00	2.00	1.00			2.00	1.97	0.03			0.05	1.12	1.83			1.84	0.16	1.00		
Final Sat.:	1769	3538	1583			3432	3482	49			83	1809	2943			3268	293	1583		
Capacity Analysis Module:																				
Vol/Sat:	0.05	0.33	0.27			0.10	0.52	0.52			0.11	0.11	0.10			0.11	0.11	0.21		
Crit Moves:	****						****				****							****		
Green/Cycle:	0.05	0.44	0.44			0.13	0.53	0.53			0.12	0.17	0.17			0.16	0.21	0.21		
Volume/Cap:	0.98	0.75	0.61			0.75	0.98	0.98			0.98	0.68	0.62			0.68	0.51	0.98		
Delay/Veh:	166.6	39.3	35.8			73.3	54.1	54.1			105.2	65.2	63.3			66.9	56.6	107.4		
User DelAdj:	1.00	1.00	1.00			1.00	1.00	1.00			1.00	1.00	1.00			1.00	1.00	1.00		
AdjDel/Veh:	166.6	39.3	35.8			73.3	54.1	54.1			105.2	65.2	63.3			66.9	56.6	107.4		
LOS by Move:	F	D	D			E	D	D			F	E	E			E	E	F		
HCM2k95thQ:	13	42	28			18	79	79			24	18	16			18	16	35		

Note: Queue reported is the number of cars per lane.

Mitigation

Level Of Service Computation Report
2000 HCM Operations Method (Future Volume Alternative)

Intersection #202 Mission Ave & River Rd

Cycle (sec): 160 | Critical Vol./Cap.(X): 0.871
Loss Time (sec): 16 | Average Delay (sec/veh): 27.5
Optimal Cycle: OPTIMIZED | Level Of Service: C

Street Name:	SR76								River Rd							
Approach:	North Bound				South Bound				East Bound				West Bound			
Movement:	L	-	T	-	R	L	-	T	-	R	L	-	T	-	R	L	-	T	-	R
Control:	Protected					Protected					Protected					Protected				
Rights:	Include					Include					Include					Include				
Min. Green:	5	5	5			5	5	5			5	5	5			5	5	5		
Y+R:	4.0	4.0	4.0			4.0	4.0	4.0			4.0	4.0	4.0			4.0	4.0	4.0		
Lanes:	1	0	2	0	0	0	0	2	0	1	1	0	0	0	1	0	0	0	0	0
Volume Module:																				
Base Vol:	155	1613	0			0	1908	273			143	0	176			0	0	0		
Growth Adj:	1.00	1.00	1.00			1.00	1.00	1.00			1.00	1.00	1.00			1.00	1.00	1.00		
Initial Bse:	155	1613	0			0	1908	273			143	0	176			0	0	0		
Added Vol:	0	9	0			0	23	7			3	0	0			0	0	0		
PasserByVol:	0	0	0			0	0	0			0	0	0			0	0	0		
Initial Fut:	155	1622	0			0	1931	280			146	0	176			0	0	0		
User Adj:	1.00	1.00	1.00			1.00	1.00	1.00			1.00	1.00	1.00			1.00	1.00	1.00		
PHF Adj:	0.95	0.95	0.95			0.95	0.95	0.95			0.95	0.95	0.95			0.95	0.95	0.95		
PHF Volume:	163	1707	0			0	2033	295			154	0	185			0	0	0		
Reduct Vol:	0	0	0			0	0	0			0	0	0			0	0	0		
Reduced Vol:	163	1707	0			0	2033	295			154	0	185			0	0	0		
PCE Adj:	1.00	1.00	1.00			1.00	1.00	1.00			1.00	1.00	1.00			1.00	1.00	1.00		
MLF Adj:	1.00	1.00	1.00			1.00	1.00	1.00			1.00	1.00	1.00			1.00	1.00	1.00		
FinalVolume:	163	1707	0			0	2033	295			154	0	185			0	0	0		
Saturation Flow Module:																				
Sat/Lane:	1900	1900	1900			1900	1900	1900			1900	1900	1900			1900	1900	1900		
Adjustment:	0.93	0.93	1.00			1.00	0.93	0.83			0.93	1.00	0.83			1.00	1.00	1.00		
Lanes:	1.00	2.00	0.00			0.00	2.00	1.00			1.00	0.00	1.00			0.00	0.00	0.00		
Final Sat.:	1769	3538	0			0	3538	1583			1769	0	1583			0	0	0		
Capacity Analysis Module:																				
Vol/Sat:	0.09	0.48	0.00			0.00	0.57	0.19			0.09	0.00	0.12			0.00	0.00	0.00		
Crit Moves:	****						****						****							
Green/Cycle:	0.11	0.72	0.00			0.00	0.66	0.66			0.12	0.00	0.13			0.00	0.00	0.00		
Volume/Cap:	0.87	0.67	0.00			0.00	0.87	0.28			0.71	0.00	0.87			0.00	0.00	0.00		
Delay/Veh:	103.3	12.9	0.0			0.0	25.6	11.5			78.3	0.0	97.8			0.0	0.0	0.0		
User DelAdj:	1.00	1.00	1.00			1.00	1.00	1.00			1.00	1.00	1.00			1.00	1.00	1.00		
AdjDel/Veh:	103.3	12.9	0.0			0.0	25.6	11.5			78.3	0.0	97.8			0.0	0.0	0.0		
LOS by Move:	F	B	A			A	C	B			E	A	F			A	A	A		
HCM2k95thQ:	19	39	0			0	67	11			16	0	21			0	0	0		

Note: Queue reported is the number of cars per lane.

Mitigation

Level Of Service Computation Report
2000 HCM Operations Method (Future Volume Alternative)

Intersection #203 Mission Rd & Olive Hill Rd

Cycle (sec): 170 | Critical Vol./Cap.(X): 0.994
Loss Time (sec): 16 | Average Delay (sec/veh): 61.2
Optimal Cycle: OPTIMIZED | Level Of Service: E

Street Name:	SR76							Olive Hill Rd/Camino Del Rey							
Approach:	North Bound				South Bound			East Bound				West Bound			
Movement:	L	-	T	-	R	L	-	T	-	R	L	-	T	-	R
Control:	Protected					Protected					Protected				
Rights:	Include					Include					Include				
Min. Green:	5	5	5			5	5	5			5	5	5		
Y+R:	4.0	4.0	4.0			4.0	4.0	4.0			4.0	4.0	4.0		
Lanes:	1	0	2	0	1	2	0	2	0	1	2	0	1	0	1
Volume Module:															
Base Vol:	133	1383	180			571	2008	189			177	260	209		
Growth Adj:	1.00	1.00	1.00			1.00	1.00	1.00			1.00	1.00	1.00		
Initial Bse:	133	1383	180			571	2008	189			177	260	209		
Added Vol:	0	13	0			3	31	1			1	0	0		
PasserByVol:	0	0	0			0	0	0			0	0	0		
Initial Fut:	133	1396	180			574	2039	190			178	260	209		
User Adj:	1.00	1.00	1.00			1.00	1.00	1.00			1.00	1.00	1.00		
PHF Adj:	0.95	0.95	0.95			0.95	0.95	0.95			0.95	0.95	0.95		
PHF Volume:	140	1469	189			604	2146	200			187	274	220		
Reduct Vol:	0	0	0			0	0	0			0	0	0		
Reduced Vol:	140	1469	189			604	2146	200			187	274	220		
PCE Adj:	1.00	1.00	1.00			1.00	1.00	1.00			1.00	1.00	1.00		
MLF Adj:	1.00	1.00	1.00			1.00	1.00	1.00			1.00	1.00	1.00		
FinalVolume:	140	1469	189			604	2146	200			187	274	220		
Saturation Flow Module:															
Sat/Lane:	1900	1900	1900			1900	1900	1900			1900	1900	1900		
Adjustment:	0.93	0.93	0.83			0.90	0.93	0.83			0.90	0.98	0.83		
Lanes:	1.00	2.00	1.00			2.00	2.00	1.00			2.00	1.00	1.00		
Final Sat.:	1769	3538	1583			3432	3538	1583			3432	1862	1583		
Capacity Analysis Module:															
Vol/Sat:	0.08	0.42	0.12			0.18	0.61	0.13			0.05	0.15	0.14		
Crit Moves:	****						****					****			
Green/Cycle:	0.08	0.48	0.48			0.21	0.61	0.61			0.08	0.15	0.15		
Volume/Cap:	0.99	0.86	0.25			0.86	0.99	0.21			0.71	0.99	0.94		
Delay/Veh:	151.9	43.1	25.8			75.3	50.6	14.9			85.0	125	114.0		
User DelAdj:	1.00	1.00	1.00			1.00	1.00	1.00			1.00	1.00	1.00		
AdjDel/Veh:	151.9	43.1	25.8			75.3	50.6	14.9			85.0	125	114.0		
LOS by Move:	F	D	C			E	D	B			F	F	F		
HCM2k95thQ:	20	58	11			31	97	9			12	32	26		

Note: Queue reported is the number of cars per lane.

Mitigation

Level Of Service Computation Report
2000 HCM Operations Method (Future Volume Alternative)

Intersection #204 SR76 & Mission Rd

Cycle (sec): 135 | Critical Vol./Cap.(X): 1.097
Loss Time (sec): 12 | Average Delay (sec/veh): 70.1
Optimal Cycle: OPTIMIZED | Level Of Service: E

Street Name:	Mission Rd							SR76							
Approach:	North Bound				South Bound			East Bound				West Bound			
Movement:	L	-	T	-	R	L	-	T	-	R	L	-	T	-	R
Control:	Split Phase					Split Phase					Protected				
Rights:	Include					Ovl					Include				
Min. Green:	5	5	5			5	5	5			5	5	5		
Y+R:	4.0	4.0	4.0			4.0	4.0	4.0			4.0	4.0	4.0		
Lanes:	0	0	0	0	0	2	0	0	0	2	2	0	2	0	0
Volume Module:															
Base Vol:	0	0	0			220	0	1072			775	1348	0		
Growth Adj:	1.00	1.00	1.00			1.00	1.00	1.00			1.00	1.00	1.00		
Initial Bse:	0	0	0			220	0	1072			775	1348	0		
Added Vol:	0	0	0			1	0	0			0	14	0		
PasserByVol:	0	0	0			0	0	0			0	0	0		
Initial Fut:	0	0	0			221	0	1072			775	1362	0		
User Adj:	1.00	1.00	1.00			1.00	1.00	1.00			1.00	1.00	1.00		
PHF Adj:	0.95	0.95	0.95			0.95	0.95	0.95			0.95	0.95	0.95		
PHF Volume:	0	0	0			233	0	1128			816	1434	0		
Reduct Vol:	0	0	0			0	0	0			0	0	0		
Reduced Vol:	0	0	0			233	0	1128			816	1434	0		
PCE Adj:	1.00	1.00	1.00			1.00	1.00	1.00			1.00	1.00	1.00		
MLF Adj:	1.00	1.00	1.00			1.00	1.00	1.00			1.00	1.00	1.00		
FinalVolume:	0	0	0			233	0	1128			816	1434	0		
Saturation Flow Module:															
Sat/Lane:	1900	1900	1900			1900	1900	1900			1900	1900	1900		
Adjustment:	1.00	1.00	1.00			0.90	1.00	0.73			0.90	0.93	1.00		
Lanes:	0.00	0.00	0.00			2.00	0.00	2.00			2.00	2.00	0.00		
Final Sat.:	0	0	0			3432	0	2786			3432	3538	0		
Capacity Analysis Module:															
Vol/Sat:	0.00	0.00	0.00			0.07	0.00	0.41			0.24	0.41	0.00		
Crit Moves:								****			****				
Green/Cycle:	0.00	0.00	0.00			0.15	0.00	0.37			0.22	0.69	0.00		
Volume/Cap:	0.00	0.00	0.00			0.44	0.00	1.10			1.10	0.58	0.00		
Delay/Veh:	0.0	0.0	0.0			52.6	0.0	100.9			115.5	10.9	0.0		
User DelAdj:	1.00	1.00	1.00			1.00	1.00	1.00			1.00	1.00	1.00		
AdjDel/Veh:	0.0	0.0	0.0			52.6	0.0	100.9			115.5	10.9	0.0		
LOS by Move:	A	A	A			D	A	F			F	B	A		
HCM2k95thQ:	0	0	0			10	0	59			42	28	0		

Note: Queue reported is the number of cars per lane.

Mitigation

Level Of Service Computation Report
2000 HCM Operations Method (Future Volume Alternative)

Intersection #205 SR76 & Gird Rd

Cycle (sec): 150 | Critical Vol./Cap.(X): 0.894
Loss Time (sec): 12 | Average Delay (sec/veh): 26.1
Optimal Cycle: OPTIMIZED | Level Of Service: C

Street Name:	Gird Rd							SR76						
Approach:	North Bound				South Bound			East Bound				West Bound		
Movement:	L	-	T	-	R	L	-	T	-	R	L	-	T	-	R	L	-	T	-	R
Control:	Split Phase					Split Phase					Protected					Protected				
Rights:	Include					Include					Include					Include				
Min. Green:	5	5	5		5	5	5		5	5	5		5	5	5		5	5	5	
Y+R:	4.0	4.0	4.0		4.0	4.0	4.0		4.0	4.0	4.0		4.0	4.0	4.0		4.0	4.0	4.0	
Lanes:	0	0	0	0	0	1	0	0	0	1	1	0	2	0	0	0	0	2	0	1
Volume Module:	PM Peak																			
Base Vol:	0	0	0		0	104	0		203	129	1577		0	0	2011		73			
Growth Adj:	1.00	1.00	1.00		1.00	1.00	1.00		1.00	1.00	1.00		1.00	1.00	1.00		1.00			
Initial Bse:	0	0	0		0	104	0		203	129	1577		0	0	2011		73			
Added Vol:	0	0	0		0	0	0		0	16	0		0	41	0					
PasserByVol:	0	0	0		0	0	0		0	0	0		0	0	0					
Initial Fut:	0	0	0		0	104	0		203	129	1593		0	0	2052		73			
User Adj:	1.00	1.00	1.00		1.00	1.00	1.00		1.00	1.00	1.00		1.00	1.00	1.00		1.00			
PHF Adj:	0.95	0.95	0.95		0.95	0.95	0.95		0.95	0.95	0.95		0.95	0.95	0.95		0.95			
PHF Volume:	0	0	0		0	109	0		214	136	1677		0	0	2160		77			
Reduct Vol:	0	0	0		0	0	0		0	0	0		0	0	0					
Reduced Vol:	0	0	0		0	109	0		214	136	1677		0	0	2160		77			
PCE Adj:	1.00	1.00	1.00		1.00	1.00	1.00		1.00	1.00	1.00		1.00	1.00	1.00		1.00			
MLF Adj:	1.00	1.00	1.00		1.00	1.00	1.00		1.00	1.00	1.00		1.00	1.00	1.00		1.00			
FinalVolume:	0	0	0		0	109	0		214	136	1677		0	0	2160		77			
Saturation Flow Module:																				
Sat/Lane:	1900	1900	1900		1900	1900	1900		1900	1900	1900		1900	1900	1900		1900			
Adjustment:	1.00	1.00	1.00		0.93	1.00	0.83		0.93	0.93	1.00		1.00	0.93	0.83					
Lanes:	0.00	0.00	0.00		1.00	0.00	1.00		1.00	2.00	0.00		0.00	2.00	1.00					
Final Sat.:	0	0	0		1769	0	1583		1769	3538	0		0	3538	1583					
Capacity Analysis Module:																				
Vol/Sat:	0.00	0.00	0.00		0.06	0.00	0.14		0.08	0.47	0.00		0.00	0.61	0.05					
Crit Moves:							****		****					****						
Green/Cycle:	0.00	0.00	0.00		0.15	0.00	0.15		0.09	0.72	0.00		0.00	0.68	0.68					
Volume/Cap:	0.00	0.00	0.00		0.41	0.00	0.89		0.89	0.66	0.00		0.00	0.89	0.07					
Delay/Veh:	0.0	0.0	0.0		58.6	0.0	94.1		111.3	12.0	0.0		0.0	24.1	7.9					
User DelAdj:	1.00	1.00	1.00		1.00	1.00	1.00		1.00	1.00	1.00		1.00	1.00	1.00					
AdjDel/Veh:	0.0	0.0	0.0		58.6	0.0	94.1		111.3	12.0	0.0		0.0	24.1	7.9					
LOS by Move:	A	A	A		E	A	F		F	B	A		A	C	A					
HCM2k95thQ:	0	0	0		9	0	23		16	36	0		0	69	2					

Note: Queue reported is the number of cars per lane.

Mitigation

Level Of Service Computation Report
2000 HCM Operations Method (Future Volume Alternative)

Intersection #206 SR76 & Old Hwy 395

Cycle (sec): 95 | Critical Vol./Cap.(X): 0.694
Loss Time (sec): 16 | Average Delay (sec/veh): 32.5
Optimal Cycle: OPTIMIZED | Level Of Service: C

Street Name:	Old Hwy 395							SR76						
Approach:	North Bound				South Bound			East Bound				West Bound		
Movement:	L	-	T	-	R	L	-	T	-	R	L	-	T	-	R	L	-	T	-	R
Control:	Protected					Protected					Protected					Protected				
Rights:	Include					Include					Include					Ovl				
Min. Green:	5	5	5		5	5	5		5	5	5		5	5	5		5	5	5	
Y+R:	4.0	4.0	4.0		4.0	4.0	4.0		4.0	4.0	4.0		4.0	4.0	4.0		4.0	4.0	4.0	
Lanes:	2	0	1	0	1	2	0	1	0	1	1	0	3	0	1	1	0	3	0	1
Volume Module:	PM Peak																			
Base Vol:	311	184	182		554	212	119		116	979	109		128	593	230					
Growth Adj:	1.00	1.00	1.00		1.00	1.00	1.00		1.00	1.00	1.00		1.00	1.00	1.00					
Initial Bse:	311	184	182		554	212	119		116	979	109		128	593	230					
Added Vol:	0	0	2		0	0	0		0	19	0		4	46	1					
PasserByVol:	0	0	0		0	0	0		0	0	0		0	0	0					
Initial Fut:	311	184	184		554	212	119		116	998	109		132	639	231					
User Adj:	1.00	1.00	1.00		1.00	1.00	1.00		1.00	1.00	1.00		1.00	1.00	1.00					
PHF Adj:	0.95	0.95	0.95		0.95	0.95	0.95		0.95	0.95	0.95		0.95	0.95	0.95					
PHF Volume:	327	194	194		583	223	125		122	1051	115		139	673	243					
Reduct Vol:	0	0	0		0	0	0		0	0	0		0	0	0					
Reduced Vol:	327	194	194		583	223	125		122	1051	115		139	673	243					
PCE Adj:	1.00	1.00	1.00		1.00	1.00	1.00		1.00	1.00	1.00		1.00	1.00	1.00					
MLF Adj:	1.00	1.00	1.00		1.00	1.00	1.00		1.00	1.00	1.00		1.00	1.00	1.00					
FinalVolume:	327	194	194		583	223	125		122	1051	115		139	673	243					
Saturation Flow Module:																				
Sat/Lane:	1900	1900	1900		1900	1900	1900		1900	1900	1900		1900	1900	1900					
Adjustment:	0.90	0.98	0.83		0.90	0.98	0.83		0.93	0.89	0.83		0.93	0.89	0.83					
Lanes:	2.00	1.00	1.00		2.00	1.00	1.00		1.00	3.00	1.00		1.00	3.00	1.00					
Final Sat.:	3432	1862	1583		3432	1862	1583		1769	5083	1583		1769	5083	1579					
Capacity Analysis Module:																				
Vol/Sat:	0.10	0.10	0.12		0.17	0.12	0.08		0.07	0.21	0.07		0.08	0.13	0.15					
Crit Moves:			****		****					****			****							
Green/Cycle:	0.19	0.18	0.18		0.24	0.23	0.23		0.14	0.30	0.30		0.11	0.27	0.51					
Volume/Cap:	0.51	0.59	0.69		0.69	0.51	0.34		0.49	0.69	0.24		0.69	0.49	0.30					
Delay/Veh:	35.4	38.8	44.1		35.2	32.7	30.8		39.2	31.0	25.5		50.7	29.5	13.4					
User DelAdj:	1.00	1.00	1.00		1.00	1.00	1.00		1.00	1.00	1.00		1.00	1.00	1.00					
AdjDel/Veh:	35.4	38.8	44.1		35.2	32.7	30.8		39.2	31.0	25.5		50.7	29.5	13.4					
LOS by Move:	D	D	D		D	C	C		D	C	C		D	C	B					
HCM2k95thQ:	10	12	13		17	12	7		8	20	5		8	11	8					

Note: Queue reported is the number of cars per lane.

Mitigation

Level Of Service Computation Report
2000 HCM Operations Method (Future Volume Alternative)

Intersection #207 SR76 & I-15 SB Ramps

Cycle (sec): 130 Critical Vol./Cap.(X): 0.873
Loss Time (sec): 12 Average Delay (sec/veh): 42.3
Optimal Cycle: OPTIMIZED Level Of Service: D

Street Name:	I-15 SB Ramps									SR76		
Approach:	North Bound			South Bound			East Bound			West Bound		
Movement:	L	T	R	L	T	R	L	T	R	L	T	R
Control:	Split Phase			Split Phase			Protected			Protected		
Rights:	Include			Include			Include			Include		
Min. Green:	5	5	5	5	5	5	5	5	5	5	5	5
Y+R:	4.0	4.0	4.0	4.0	4.0	4.0	4.0	4.0	4.0	4.0	4.0	4.0
Lanes:	0 0	0	0 0	1 1	0	0 2	0 0	2	0 1	2 0	2	0 0
Volume Module:	PM Peak											
Base Vol:	0	0	0	193	4	955	0	1045	405	274	744	0
Growth Adj:	1.00	1.00	1.00	1.00	1.00	1.00	1.00	1.00	1.00	1.00	1.00	1.00
Initial Bse:	0	0	0	193	4	955	0	1045	405	274	744	0
Added Vol:	0	0	0	4	0	0	0	20	0	101	51	0
PasserByVol:	0	0	0	0	0	0	0	0	0	0	0	0
Initial Fut:	0	0	0	197	4	955	0	1065	405	375	795	0
User Adj:	1.00	1.00	1.00	1.00	1.00	1.00	1.00	1.00	1.00	1.00	1.00	1.00
PHF Adj:	0.95	0.95	0.95	0.95	0.95	0.95	0.95	0.95	0.95	0.95	0.95	0.95
PHF Volume:	0	0	0	207	4	1005	0	1121	426	395	837	0
Reduct Vol:	0	0	0	0	0	0	0	0	0	0	0	0
Reduced Vol:	0	0	0	207	4	1005	0	1121	426	395	837	0
PCE Adj:	1.00	1.00	1.00	1.00	1.00	1.00	1.00	1.00	1.00	1.00	1.00	1.00
MLF Adj:	1.00	1.00	1.00	1.00	1.00	1.00	1.00	1.00	1.00	1.00	1.00	1.00
FinalVolume:	0	0	0	207	4	1005	0	1121	426	395	837	0
Saturation Flow Module:												
Sat/Lane:	1900	1900	1900	1900	1900	1900	1900	1900	1900	1900	1900	1900
Adjustment:	1.00	1.00	1.00	0.96	0.96	0.73	1.00	0.93	0.83	0.90	0.93	1.00
Lanes:	0.00	0.00	0.00	1.96	0.04	2.00	0.00	2.00	1.00	2.00	2.00	0.00
Final Sat.:	0	0	0	3559	72	2786	0	3538	1583	3432	3538	0
Capacity Analysis Module:												
Vol/Sat:	0.00	0.00	0.00	0.06	0.06	0.36	0.00	0.32	0.27	0.12	0.24	0.00
Crit Moves:						****		****		****		
Green/Cycle:	0.00	0.00	0.00	0.41	0.41	0.41	0.00	0.36	0.36	0.13	0.43	0.00
Volume/Cap:	0.00	0.00	0.00	0.14	0.14	0.87	0.00	0.87	0.74	0.87	0.56	0.00
Delay/Veh:	0.0	0.0	0.0	23.8	23.8	42.6	0.0	45.5	41.3	72.3	28.6	0.0
User DelAdj:	1.00	1.00	1.00	1.00	1.00	1.00	1.00	1.00	1.00	1.00	1.00	1.00
AdjDel/Veh:	0.0	0.0	0.0	23.8	23.8	42.6	0.0	45.5	41.3	72.3	28.6	0.0
LOS by Move:	A	A	A	C	C	D	A	D	D	E	C	A
HCM2k95thQ:	0	0	0	5	5	39	0	37	26	16	23	0

Note: Queue reported is the number of cars per lane.

Mitigation

Level Of Service Computation Report
2000 HCM Operations Method (Future Volume Alternative)

Intersection #208 SR76 & I-15 NB Ramps

Cycle (sec): 90 Critical Vol./Cap.(X): 0.705
Loss Time (sec): 12 Average Delay (sec/veh): 26.1
Optimal Cycle: OPTIMIZED Level Of Service: C

Street Name:	I-15 NB Ramps									SR76		
Approach:	North Bound			South Bound			East Bound			West Bound		
Movement:	L	T	R	L	T	R	L	T	R	L	T	R
Control:	Split Phase			Split Phase			Protected			Protected		
Rights:	Include			Include			Include			Include		
Min. Green:	5	5	5	5	5	5	5	5	5	5	5	5
Y+R:	4.0	4.0	4.0	4.0	4.0	4.0	4.0	4.0	4.0	4.0	4.0	4.0
Lanes:	1 1	0	0 2	0 0	0	0 0	2 0	2	0 0	0 0	2	0 1
Volume Module:	PM Peak											
Base Vol:	280	1	320	0	0	0	686	557	0	0	737	181
Growth Adj:	1.00	1.00	1.00	1.00	1.00	1.00	1.00	1.00	1.00	1.00	1.00	1.00
Initial Bse:	280	1	320	0	0	0	686	557	0	0	737	181
Added Vol:	0	0	41	0	0	0	0	24	0	0	152	10
PasserByVol:	0	0	0	0	0	0	0	0	0	0	0	0
Initial Fut:	280	1	361	0	0	0	686	581	0	0	889	191
User Adj:	1.00	1.00	1.00	1.00	1.00	1.00	1.00	1.00	1.00	1.00	1.00	1.00
PHF Adj:	0.95	0.95	0.95	0.95	0.95	0.95	0.95	0.95	0.95	0.95	0.95	0.95
PHF Volume:	295	1	380	0	0	0	722	612	0	0	936	201
Reduct Vol:	0	0	0	0	0	0	0	0	0	0	0	0
Reduced Vol:	295	1	380	0	0	0	722	612	0	0	936	201
PCE Adj:	1.00	1.00	1.00	1.00	1.00	1.00	1.00	1.00	1.00	1.00	1.00	1.00
MLF Adj:	1.00	1.00	1.00	1.00	1.00	1.00	1.00	1.00	1.00	1.00	1.00	1.00
FinalVolume:	295	1	380	0	0	0	722	612	0	0	936	201
Saturation Flow Module:												
Sat/Lane:	1900	1900	1900	1900	1900	1900	1900	1900	1900	1900	1900	1900
Adjustment:	0.92	0.92	0.73	1.00	1.00	1.00	0.90	0.93	1.00	1.00	0.93	0.83
Lanes:	1.99	0.01	2.00	0.00	0.00	0.00	2.00	2.00	0.00	0.00	2.00	1.00
Final Sat.:	3470	12	2786	0	0	0	3432	3538	0	0	3538	1583
Capacity Analysis Module:												
Vol/Sat:	0.08	0.08	0.14	0.00	0.00	0.00	0.21	0.17	0.00	0.00	0.26	0.13
Crit Moves:			****				****				****	
Green/Cycle:	0.19	0.19	0.19	0.00	0.00	0.00	0.30	0.51	0.00	0.00	0.37	0.37
Volume/Cap:	0.44	0.44	0.71	0.00	0.00	0.00	0.71	0.34	0.00	0.00	0.71	0.34
Delay/Veh:	32.5	32.5	38.1	0.0	0.0	0.0	30.3	13.2	0.0	0.0	25.7	20.5
User DelAdj:	1.00	1.00	1.00	1.00	1.00	1.00	1.00	1.00	1.00	1.00	1.00	1.00
AdjDel/Veh:	32.5	32.5	38.1	0.0	0.0	0.0	30.3	13.2	0.0	0.0	25.7	20.5
LOS by Move:	C	C	D	A	A	A	C	B	A	A	C	C
HCM2k95thQ:	8	8	13	0	0	0	16	10	0	0	23	8

Note: Queue reported is the number of cars per lane.

Mitigation

Level Of Service Computation Report
2000 HCM Operations Method (Future Volume Alternative)

Intersection #211 SR76 & Rice Cyn Rd

Cycle (sec): 100 | Critical Vol./Cap.(X): 0.456
Loss Time (sec): 12 | Average Delay (sec/veh): 14.6
Optimal Cycle: 38 | Level Of Service: B

Street Name:	Rice Cyn Rd									SR76		
Approach:	North Bound			South Bound			East Bound			West Bound		
Movement:	L	- T	- R	L	- T	- R	L	- T	- R	L	- T	- R
Control:	Protected			Protected			Protected			Protected		
Rights:	Include			Include			Include			Include		
Min. Green:	5	5	5	5	5	5	5	5	5	5	5	5
Y+R:	4.0	4.0	4.0	4.0	4.0	4.0	4.0	4.0	4.0	4.0	4.0	4.0
Lanes:	0	0	0 0	1	0	0 0 1	1	0	2 0 0	0	0	1 1 0
Volume Module: >> Count Date: 19 Oct 2006 <<												
Base Vol:	0	0	0	77	0	138	55	943	0	0	450	40
Growth Adj:	1.00	1.00	1.00	1.00	1.00	1.00	1.00	1.00	1.00	1.00	1.00	1.00
Initial Bse:	0	0	0	77	0	138	55	943	0	0	450	40
Added Vol:	0	0	0	9	0	0	0	98	0	0	243	21
PasserByVol:	0	0	0	0	0	0	0	0	0	0	0	0
Initial Fut:	0	0	0	86	0	138	55	1041	0	0	693	61
User Adj:	1.00	1.00	1.00	1.00	1.00	1.00	1.00	1.00	1.00	1.00	1.00	1.00
PHF Adj:	0.95	0.95	0.95	0.95	0.95	0.95	0.95	0.95	0.95	0.95	0.95	0.95
PHF Volume:	0	0	0	91	0	145	58	1096	0	0	729	64
Reduct Vol:	0	0	0	0	0	0	0	0	0	0	0	0
Reduced Vol:	0	0	0	91	0	145	58	1096	0	0	729	64
PCE Adj:	1.00	1.00	1.00	1.00	1.00	1.00	1.00	1.00	1.00	1.00	1.00	1.00
MLF Adj:	1.00	1.00	1.00	1.00	1.00	1.00	1.00	1.00	1.00	1.00	1.00	1.00
FinalVolume:	0	0	0	91	0	145	58	1096	0	0	729	64
Saturation Flow Module:												
Sat/Lane:	1900	1900	1900	1900	1900	1900	1900	1900	1900	1900	1900	1900
Adjustment:	1.00	1.00	1.00	0.93	1.00	0.83	0.93	0.93	1.00	1.00	0.92	0.92
Lanes:	0.00	0.00	0.00	1.00	0.00	1.00	1.00	2.00	0.00	0.00	1.84	0.16
Final Sat.:	0	0	0	1769	0	1583	1769	3538	0	0	3213	283
Capacity Analysis Module:												
Vol/Sat:	0.00	0.00	0.00	0.05	0.00	0.09	0.03	0.31	0.00	0.00	0.23	0.23
Crit Moves:						****		****		****		
Green/Cycle:	0.00	0.00	0.00	0.12	0.00	0.19	0.12	0.64	0.00	0.00	0.57	0.57
Volume/Cap:	0.00	0.00	0.00	0.42	0.00	0.48	0.26	0.48	0.00	0.00	0.40	0.40
Delay/Veh:	0.0	0.0	0.0	42.0	0.0	37.4	40.3	9.5	0.0	0.0	12.3	12.3
User DelAdj:	1.00	1.00	1.00	1.00	1.00	1.00	1.00	1.00	1.00	1.00	1.00	1.00
AdjDel/Veh:	0.0	0.0	0.0	42.0	0.0	37.4	40.3	9.5	0.0	0.0	12.3	12.3
LOS by Move:	A	A	A	D	A	D	D	A	A	A	B	B
HCM2k95thQ:	0	0	0	6	0	9	3	17	0	0	14	14

Note: Queue reported is the number of cars per lane.

Mitigation

Level Of Service Computation Report
2000 HCM Unsignalized Method (Future Volume Alternative)

Intersection #212 SR76 & Couser Cyn Rd

Average Delay (sec/veh): 2.0 | Worst Case Level Of Service: C[20.2]

Street Name:	Couser Cyn Rd									SR76		
Approach:	North Bound			South Bound			East Bound			West Bound		
Movement:	L	- T	- R	L	- T	- R	L	- T	- R	L	- T	- R
Control:	Stop Sign			Stop Sign			Uncontrolled			Uncontrolled		
Rights:	Include			Include			Include			Include		
Lanes:	1	0	0 0 1	0	0	1! 0 0	0	0	1 1 0	1	0	2 0 0
Volume Module:												
Base Vol:	81	0	32	0	0	0	0	883	32	16	426	0
Growth Adj:	1.00	1.00	1.00	1.00	1.00	1.00	1.00	1.00	1.00	1.00	1.00	1.00
Initial Bse:	81	0	32	0	0	0	0	883	32	16	426	0
Added Vol:	0	0	0	0	0	0	0	106	0	1	264	0
PasserByVol:	0	0	0	0	0	0	0	0	0	0	-637	0
Initial Fut:	81	0	32	0	0	0	0	989	32	17	53	0
User Adj:	1.00	1.00	1.00	1.00	1.00	1.00	1.00	1.00	1.00	1.00	1.00	1.00
PHF Adj:	0.95	0.95	0.95	0.95	0.95	0.95	0.95	0.95	0.95	0.95	0.95	0.95
PHF Volume:	85	0	34	0	0	0	0	1041	34	18	56	0
Reduct Vol:	0	0	0	0	0	0	0	0	0	0	0	0
FinalVolume:	85	0	34	0	0	0	0	1041	34	18	56	0
Critical Gap Module:												
Critical Gp:	6.8	xxxx	6.9	7.5	6.5	6.9	xxxxx	xxxx	xxxxx	4.1	xxxx	xxxxx
FollowUpTim:	3.5	xxxx	3.3	3.5	4.0	3.3	xxxxx	xxxx	xxxxx	2.2	xxxx	xxxxx
Capacity Module:												
Cnflict Vol:	1142	xxxx	557	632	1186	48	xxxx	xxxx	xxxxx	1085	xxxx	xxxxx
Potent Cap.:	194	xxxx	474	365	187	1011	xxxx	xxxx	xxxxx	639	xxxx	xxxxx
Move Cap.:	187	xxxx	466	326	179	994	xxxx	xxxx	xxxxx	633	xxxx	xxxxx
Total Cap:	285	290	xxxxx	436	267	xxxxx	xxxx	xxxx	xxxxx	xxxx	xxxx	xxxxx
Volume/Cap:	0.30	xxxx	0.07	0.00	0.00	0.00	xxxx	xxxx	xxxx	0.03	xxxx	xxxx
Level Of Service Module:												
2Way95thQ:	1.2	xxxx	0.2	xxxx	xxxx	xxxxx	xxxx	xxxx	xxxxx	0.1	xxxx	xxxxx
Control Del:	22.9	xxxx	13.3	xxxxx	xxxx	xxxxx	xxxxx	xxxx	xxxxx	10.8	xxxx	xxxxx
LOS by Move:	C	*	B	*	*	*	*	*	*	B	*	*
Movement:	LT - LTR - RT			LT - LTR - RT			LT - LTR - RT			LT - LTR - RT		
Shared Cap.:	xxxx	xxxx	xxxxx	xxxx	0	xxxxx	xxxx	xxxx	xxxxx	xxxx	xxxx	xxxxx
SharedQueue:	xxxxx	xxxx	xxxxx	xxxxx	xxxx	xxxxx	xxxxx	xxxx	xxxxx	xxxxx	xxxx	xxxxx
Shrd ConDel:	xxxxx	xxxx	xxxxx	xxxxx	xxxx	xxxxx	xxxxx	xxxx	xxxxx	xxxxx	xxxx	xxxxx
Shared LOS:	*	*	*	*	*	*	*	*	*	*	*	*
ApproachDel:	20.2			xxxxxx			xxxxxx			xxxxxx		
ApproachLOS:	C			*			*			*		

Note: Queue reported is the number of cars per lane.

Mitigation

Level Of Service Computation Report
2000 HCM Operations Method (Future Volume Alternative)

Intersection #222 SR76 & Cole Grade Rd

Cycle (sec):	90	Critical Vol./Cap.(X):	0.551
Loss Time (sec):	12	Average Delay (sec/veh):	19.7
Optimal Cycle:	60	Level Of Service:	B

Street Name:	Cole Grade Rd							SR76					
Approach:	North Bound			South Bound			East Bound			West Bound			
Movement:	L	- T	- R	L	- T	- R	L	- T	- R	L	- T	- R	
Control:	Permitted			Permitted			Protected			Protected			
Rights:	Include			Include			Include			Include			
Min. Green:	5	5	5	5	5	5	5	5	5	5	5	5	
Y+R:	4.0	4.0	4.0	4.0	4.0	4.0	4.0	4.0	4.0	4.0	4.0	4.0	
Lanes:	1	0 0	1 0	0	0 0	1 0	1	0 1	0 1	1	0 1	0 1	
Volume Module:													
Base Vol:	193	0	102	0	2	3	2	507	131	75	333	3	
Growth Adj:	1.00	1.00	1.00	1.00	1.00	1.00	1.00	1.00	1.00	1.00	1.00	1.00	
Initial Bse:	193	0	102	0	2	3	2	507	131	75	333	3	
Added Vol:	1	0	0	0	0	1	3	5	2	0	2	0	
PasserByVol:	0	0	0	0	0	0	0	0	0	0	0	0	
Initial Fut:	194	0	102	0	2	4	5	512	133	75	335	3	
User Adj:	1.00	1.00	1.00	1.00	1.00	1.00	1.00	1.00	1.00	1.00	1.00	1.00	
PHF Adj:	0.95	0.95	0.95	0.95	0.95	0.95	0.95	0.95	0.95	0.95	0.95	0.95	
PHF Volume:	204	0	107	0	2	4	5	539	140	79	353	3	
Reduct Vol:	0	0	0	0	0	0	0	0	0	0	0	0	
Reduced Vol:	204	0	107	0	2	4	5	539	140	79	353	3	
PCE Adj:	1.00	1.00	1.00	1.00	1.00	1.00	1.00	1.00	1.00	1.00	1.00	1.00	
MLF Adj:	1.00	1.00	1.00	1.00	1.00	1.00	1.00	1.00	1.00	1.00	1.00	1.00	
FinalVolume:	204	0	107	0	2	4	5	539	140	79	353	3	
Saturation Flow Module:													
Sat/Lane:	1900	1900	1900	1900	1900	1900	1900	1900	1900	1900	1900	1900	
Adjustment:	0.75	1.00	0.83	1.00	0.89	0.89	0.93	0.98	0.83	0.93	0.98	0.83	
Lanes:	1.00	0.00	1.00	0.00	0.33	0.67	1.00	1.00	1.00	1.00	1.00	1.00	
Final Sat.:	1423	0	1583	0	565	1130	1769	1862	1583	1769	1862	1583	
Capacity Analysis Module:													
Vol/Sat:	0.14	0.00	0.07	0.00	0.00	0.00	0.00	0.29	0.09	0.04	0.19	0.00	
Crit Moves:	****							****		****			
Green/Cycle:	0.26	0.00	0.26	0.00	0.26	0.26	0.14	0.53	0.53	0.08	0.47	0.47	
Volume/Cap:	0.55	0.00	0.26	0.00	0.01	0.01	0.02	0.55	0.17	0.55	0.40	0.00	
Delay/Veh:	30.5	0.0	26.7	0.0	24.7	24.7	33.6	15.0	11.2	44.3	16.0	12.7	
User DelAdj:	1.00	1.00	1.00	1.00	1.00	1.00	1.00	1.00	1.00	1.00	1.00	1.00	
AdjDel/Veh:	30.5	0.0	26.7	0.0	24.7	24.7	33.6	15.0	11.2	44.3	16.0	12.7	
LOS by Move:	C	A	C	A	C	C	C	B	B	D	B	B	
HCM2k95thQ:	11	0	5	0	0	0	0	19	4	6	12	0	

Note: Queue reported is the number of cars per lane.

Mitigation

Level Of Service Computation Report
2000 HCM Operations Method (Future Volume Alternative)

Intersection #201 SR76 & Vista Way

Cycle (sec): 160 | Critical Vol./Cap.(X): 1.230
Loss Time (sec): 16 | Average Delay (sec/veh): 106.9
Optimal Cycle: OPTIMIZED | Level Of Service: F

Street Name:	SR76								Vista Way			
Approach:	North Bound				South Bound				East Bound			
Movement:	L	- T	- R		L	- T	- R		L	- T	- R	
Control:	Protected				Protected				Protected			
Rights:	Include				Include				Include			
Min. Green:	5	5	5		5	5	5		5	5	5	
Y+R:	4.0	4.0	4.0		4.0	4.0	4.0		4.0	4.0	4.0	
Lanes:	1	0	2	0	1	2	0	1	1	0	0	1
Volume Module:												
Base Vol:	122	2002	425		521	1475	35		11	68	83	
Growth Adj:	1.00	1.00	1.00		1.00	1.00	1.00		1.00	1.00	1.00	
Initial Bse:	122	2002	425		521	1475	35		11	68	83	
Added Vol:	2	22	0		3	10	0		0	1	1	
PasserByVol:	0	0	0		0	0	0		0	0	0	
Initial Fut:	124	2024	425		524	1485	35		11	69	84	
User Adj:	1.00	1.00	1.00		1.00	1.00	1.00		1.00	1.00	1.00	
PHF Adj:	0.95	0.95	0.95		0.95	0.95	0.95		0.95	0.95	0.95	
PHF Volume:	131	2131	447		552	1563	37		12	73	88	
Reduct Vol:	0	0	0		0	0	0		0	0	0	
Reduced Vol:	131	2131	447		552	1563	37		12	73	88	
PCE Adj:	1.00	1.00	1.00		1.00	1.00	1.00		1.00	1.00	1.00	
MLF Adj:	1.00	1.00	1.00		1.00	1.00	1.00		1.00	1.00	1.00	
FinalVolume:	131	2131	447		552	1563	37		12	73	88	
Saturation Flow Module:												
Sat/Lane:	1900	1900	1900		1900	1900	1900		1900	1900	1900	
Adjustment:	0.93	0.93	0.83		0.90	0.93	0.93		0.86	0.86	0.86	
Lanes:	1.00	2.00	1.00		2.00	1.95	0.05		0.18	1.13	1.69	
Final Sat.:	1769	3538	1583		3432	3446	81		294	1841	2749	
Capacity Analysis Module:												
Vol/Sat:	0.07	0.60	0.28		0.16	0.45	0.45		0.04	0.04	0.03	
Crit Moves:		****			****				****			
Green/Cycle:	0.09	0.49	0.49		0.13	0.53	0.53		0.03	0.07	0.07	
Volume/Cap:	0.85	1.23	0.58		1.23	0.85	0.85		1.23	0.60	0.49	
Delay/Veh:	105.8	150	30.1		191.3	35.8	35.8		228.1	76.0	73.1	
User DelAdj:	1.00	1.00	1.00		1.00	1.00	1.00		1.00	1.00	1.00	
AdjDel/Veh:	105.8	150	30.1		191.3	35.8	35.8		228.1	76.0	73.1	
LOS by Move:	F	F	C		F	D	D		F	E	E	
HCM2k95thQ:	16	121	27		38	58	58		13	8	6	

Street Name:	Vista Way											
Approach:	West Bound											
Movement:	L	- T	- R									
Control:	Protected											
Rights:	Include											
Min. Green:	5	5	5									
Y+R:	4.0	4.0	4.0									
Lanes:	1	1	0	0	1							
Volume Module:												
Base Vol:	349	82	452									
Growth Adj:	1.00	1.00	1.00									
Initial Bse:	349	82	452									
Added Vol:	0	2	6									
PasserByVol:	0	0	0									
Initial Fut:	349	84	458									
User Adj:	1.00	1.00	1.00									
PHF Adj:	0.95	0.95	0.95									
PHF Volume:	367	88	482									
Reduct Vol:	0	0	0									
Reduced Vol:	367	88	482									
PCE Adj:	1.00	1.00	1.00									
MLF Adj:	1.00	1.00	1.00									
FinalVolume:	367	88	482									
Saturation Flow Module:												
Sat/Lane:	1900	1900	1900									
Adjustment:	0.83	0.94	0.83									
Lanes:	1.69	1.61	0.39	1.00								
Final Sat.:	2749	2885	694	1583								
Capacity Analysis Module:												
Vol/Sat:	0.13	0.13	0.30									
Crit Moves:			****									
Green/Cycle:	0.21	0.25	0.25									
Volume/Cap:	0.60	0.51	1.23									
Delay/Veh:	58.0	52.4	184.2									
User DelAdj:	1.00	1.00	1.00									
AdjDel/Veh:	58.0	52.4	184.2									
LOS by Move:	E	D	F									
HCM2k95thQ:	19	18	58									

Note: Queue reported is the number of cars per lane.

Mitigation

Level Of Service Computation Report
2000 HCM Operations Method (Future Volume Alternative)

Intersection #202 Mission Ave & River Rd

Cycle (sec): 160 | Critical Vol./Cap.(X): 0.981
Loss Time (sec): 16 | Average Delay (sec/veh): 57.8
Optimal Cycle: OPTIMIZED | Level Of Service: E

Street Name:	SR76								River Rd			
Approach:	North Bound				South Bound				East Bound			
Movement:	L	- T	- R		L	- T	- R		L	- T	- R	
Control:	Protected				Protected				Protected			
Rights:	Include				Include				Include			
Min. Green:	5	5	5		5	5	5		5	5	5	
Y+R:	4.0	4.0	4.0		4.0	4.0	4.0		4.0	4.0	4.0	
Lanes:	1	0	2	0	0	0	0	2	0	1	1	0
Volume Module:												
Base Vol:	212	2185	0		0	1794	154		369	0	179	
Growth Adj:	1.00	1.00	1.00		1.00	1.00	1.00		1.00	1.00	1.00	
Initial Bse:	212	2185	0		0	1794	154		369	0	179	
Added Vol:	0	28	0		0	12	4		8	0	0	
PasserByVol:	0	0	0		0	0	0		0	0	0	
Initial Fut:	212	2213	0		0	1806	158		377	0	179	
User Adj:	1.00	1.00	1.00		1.00	1.00	1.00		1.00	1.00	1.00	
PHF Adj:	0.95	0.95	0.95		0.95	0.95	0.95		0.95	0.95	0.95	
PHF Volume:	223	2329	0		0	1901	166		397	0	188	
Reduct Vol:	0	0	0		0	0	0		0	0	0	
Reduced Vol:	223	2329	0		0	1901	166		397	0	188	
PCE Adj:	1.00	1.00	1.00		1.00	1.00	1.00		1.00	1.00	1.00	
MLF Adj:	1.00	1.00	1.00		1.00	1.00	1.00		1.00	1.00	1.00	
FinalVolume:	223	2329	0		0	1901	166		397	0	188	
Saturation Flow Module:												
Sat/Lane:	1900	1900	1900		1900	1900	1900		1900	1900	1900	
Adjustment:	0.93	0.93	1.00		1.00	0.93	0.83		0.93	1.00	0.83	
Lanes:	1.00	2.00	0.00		0.00	2.00	1.00		1.00	0.00	1.00	
Final Sat.:	1769	3538	0		0	3538	1583		1769	0	1583	
Capacity Analysis Module:												
Vol/Sat:	0.13	0.66	0.00		0.00	0.54	0.11		0.22	0.00	0.12	
Crit Moves:		****			****				****			
Green/Cycle:	0.13	0.65	0.00		0.00	0.55	0.55		0.22	0.00	0.20	
Volume/Cap:	0.98	1.02	0.00		0.00	0.98	0.19		1.02	0.00	0.60	
Delay/Veh:	122.2	51.1	0.0		0.0	50.3	18.2		112.0	0.0	61.3	
User DelAdj:	1.00	1.00	1.00		1.00	1.00	1.00		1.00	1.00	1.00	
AdjDel/Veh:	122.2	51.1	0.0		0.0	50.3	18.2		112.0	0.0	61.3	
LOS by Move:	F	D	A		A	D	B		F	A	E	
HCM2k95thQ:	26	103	0		0	81	8		41	0	17	

Street Name:	River Rd											
Approach:	West Bound											
Movement:	L	- T	- R									
Control:	Protected											
Rights:	Include											
Min. Green:	5	5	5									
Y+R:	4.0	4.0	4.0									
Lanes:	0	0	0	0	0							
Volume Module:												
Base Vol:	0	0	0									
Growth Adj:	1.00	1.00	1.00									
Initial Bse:	0	0	0									
Added Vol:	0	0	0									
PasserByVol:	0	0	0									
Initial Fut:	0	0	0									
User Adj:	1.00	1.00	1.00									
PHF Adj:	0.95	0.95	0.95									
PHF Volume:	0	0	0									
Reduct Vol:	0	0	0									
Reduced Vol:	0	0	0									
PCE Adj:	1.00	1.00	1.00									
MLF Adj:	1.00	1.00	1.00									
FinalVolume:	0	0	0									
Saturation Flow Module:												
Sat/Lane:	1900	1900	1900									
Adjustment:	1.00	1.00	1.00									
Lanes:	0.00	0.00	0.00									
Final Sat.:	0	0	0									
Capacity Analysis Module:												
Vol/Sat:	0.00	0.00	0.00									
Crit Moves:												
Green/Cycle:	0.00	0.00	0.00									
Volume/Cap:	0.00	0.00	0.00									
Delay/Veh:	0.0	0.0	0.0									
User DelAdj:	1.00	1.00	1.00									
AdjDel/Veh:	0.0	0.0	0.0									
LOS by Move:	A	A	A									
HCM2k95thQ:	0	0	0									

Note: Queue reported is the number of cars per lane.

Mitigation

Level Of Service Computation Report
2000 HCM Operations Method (Future Volume Alternative)

Intersection #203 Mission Rd & Olive Hill Rd

Cycle (sec): 170 | Critical Vol./Cap.(X): 1.213
Loss Time (sec): 16 | Average Delay (sec/veh): 105.7
Optimal Cycle: OPTIMIZED | Level Of Service: F

Street Name:	SR76							Olive Hill Rd/Camino Del Rey							
Approach:	North Bound				South Bound			East Bound				West Bound			
Movement:	L	-	T	-	R	L	-	T	-	R	L	-	T	-	R
Control:	Protected				Protected			Protected				Protected			
Rights:	Include				Include			Include				Ovl			
Min. Green:	5	5	5		5	5	5	5	5	5		5	5	5	
Y+R:	4.0	4.0	4.0		4.0	4.0	4.0	4.0	4.0	4.0		4.0	4.0	4.0	
Lanes:	1	0	2	0	1	2	0	2	0	1	2	0	1	0	1
Volume Module:															
Base Vol:	171	2716	205		296	1801	124	258	196	113		76	192	293	
Growth Adj:	1.00	1.00	1.00		1.00	1.00	1.00	1.00	1.00	1.00		1.00	1.00	1.00	
Initial Bse:	171	2716	205		296	1801	124	258	196	113		76	192	293	
Added Vol:	0	37	0		1	17	1	2	0	0		0	0	3	
PasserByVol:	0	0	0		0	0	0	0	0	0		0	0	0	
Initial Fut:	171	2753	205		297	1818	125	260	196	113		76	192	296	
User Adj:	1.00	1.00	1.00		1.00	1.00	1.00	1.00	1.00	1.00		1.00	1.00	1.00	
PHF Adj:	0.95	0.95	0.95		0.95	0.95	0.95	0.95	0.95	0.95		0.95	0.95	0.95	
PHF Volume:	180	2898	216		313	1914	132	274	206	119		80	202	312	
Reduct Vol:	0	0	0		0	0	0	0	0	0		0	0	0	
Reduced Vol:	180	2898	216		313	1914	132	274	206	119		80	202	312	
PCE Adj:	1.00	1.00	1.00		1.00	1.00	1.00	1.00	1.00	1.00		1.00	1.00	1.00	
MLF Adj:	1.00	1.00	1.00		1.00	1.00	1.00	1.00	1.00	1.00		1.00	1.00	1.00	
FinalVolume:	180	2898	216		313	1914	132	274	206	119		80	202	312	
Saturation Flow Module:															
Sat/Lane:	1900	1900	1900		1900	1900	1900	1900	1900	1900		1900	1900	1900	
Adjustment:	0.93	0.93	0.83		0.90	0.93	0.83	0.90	0.98	0.83		0.93	0.98	0.83	
Lanes:	1.00	2.00	1.00		2.00	2.00	1.00	2.00	1.00	1.00		1.00	1.00	1.00	
Final Sat.:	1769	3538	1583		3432	3538	1583	3432	1862	1583		1769	1862	1583	
Capacity Analysis Module:															
Vol/Sat:	0.10	0.82	0.14		0.09	0.54	0.08	0.08	0.11	0.08		0.05	0.11	0.20	
Crit Moves:		****			****			****					****		
Green/Cycle:	0.12	0.68	0.68		0.08	0.63	0.63	0.07	0.11	0.11		0.05	0.09	0.16	
Volume/Cap:	0.86	1.21	0.20		1.21	0.86	0.13	1.21	1.00	0.68		1.00	1.21	1.20	
Delay/Veh:	101.0	127	10.5		204.6	28.6	12.6	208.8	140	83.3		183.4	216	190.3	
User DelAdj:	1.00	1.00	1.00		1.00	1.00	1.00	1.00	1.00	1.00		1.00	1.00	1.00	
AdjDel/Veh:	101.0	127	10.5		204.6	28.6	12.6	208.8	140	83.3		183.4	216	190.3	
LOS by Move:	F	F	B		F	C	B	F	F	F		F	F	F	
HCM2k95thQ:	21	166	8		25	67	5	23	26	14		13	30	41	

Note: Queue reported is the number of cars per lane.

Mitigation

Level Of Service Computation Report
2000 HCM Operations Method (Future Volume Alternative)

Intersection #204 SR76 & Mission Rd

Cycle (sec): 135 | Critical Vol./Cap.(X): 1.053
Loss Time (sec): 12 | Average Delay (sec/veh): 52.3
Optimal Cycle: OPTIMIZED | Level Of Service: D

Street Name:	Mission Rd							SR76							
Approach:	North Bound				South Bound			East Bound				West Bound			
Movement:	L	-	T	-	R	L	-	T	-	R	L	-	T	-	R
Control:	Split Phase				Split Phase			Protected				Protected			
Rights:	Include				Ovl			Include				Include			
Min. Green:	5	5	5		5	5	5	5	5	5		5	5	5	
Y+R:	4.0	4.0	4.0		4.0	4.0	4.0	4.0	4.0	4.0		4.0	4.0	4.0	
Lanes:	0	0	0	0	0	2	0	0	0	2	2	0	2	0	0
Volume Module: >> Count Date: 25 Oct 2006 <<															
Base Vol:	0	0	0		300	0	869	1160	2499	0		0	1698	223	
Growth Adj:	1.00	1.00	1.00		1.00	1.00	1.00	1.00	1.00	1.00		1.00	1.00	1.00	
Initial Bse:	0	0	0		300	0	869	1160	2499	0		0	1698	223	
Added Vol:	0	0	0		2	0	0	0	42	0		0	19	1	
PasserByVol:	0	0	0		0	0	0	0	0	0		0	0	0	
Initial Fut:	0	0	0		302	0	869	1160	2541	0		0	1717	224	
User Adj:	1.00	1.00	1.00		1.00	1.00	1.00	1.00	1.00	1.00		1.00	1.00	1.00	
PHF Adj:	0.95	0.95	0.95		0.95	0.95	0.95	0.95	0.95	0.95		0.95	0.95	0.95	
PHF Volume:	0	0	0		318	0	915	1221	2675	0		0	1807	236	
Reduct Vol:	0	0	0		0	0	0	0	0	0		0	0	0	
Reduced Vol:	0	0	0		318	0	915	1221	2675	0		0	1807	236	
PCE Adj:	1.00	1.00	1.00		1.00	1.00	1.00	1.00	1.00	1.00		1.00	1.00	1.00	
MLF Adj:	1.00	1.00	1.00		1.00	1.00	1.00	1.00	1.00	1.00		1.00	1.00	1.00	
FinalVolume:	0	0	0		318	0	915	1221	2675	0		0	1807	236	
Saturation Flow Module:															
Sat/Lane:	1900	1900	1900		1900	1900	1900	1900	1900	1900		1900	1900	1900	
Adjustment:	1.00	1.00	1.00		0.90	1.00	0.73	0.90	0.93	1.00		1.00	0.93	0.83	
Lanes:	0.00	0.00	0.00		2.00	0.00	2.00	2.00	2.00	0.00		0.00	2.00	1.00	
Final Sat.:	0	0	0		3432	0	2786	3432	3538	0		0	3538	1583	
Capacity Analysis Module:															
Vol/Sat:	0.00	0.00	0.00		0.09	0.00	0.33	0.36	0.76	0.00		0.00	0.51	0.15	
Crit Moves:					****			****					****		
Green/Cycle:	0.00	0.00	0.00		0.09	0.00	0.43	0.34	0.78	0.00		0.00	0.49	0.49	
Volume/Cap:	0.00	0.00	0.00		1.05	0.00	0.77	1.05	0.96	0.00		0.00	1.05	0.31	
Delay/Veh:	0.0	0.0	0.0		127.9	0.0	36.3	86.2	22.8	0.0		0.0	71.9	21.2	
User DelAdj:	1.00	1.00	1.00		1.00	1.00	1.00	1.00	1.00	1.00		1.00	1.00	1.00	
AdjDel/Veh:	0.0	0.0	0.0		127.9	0.0	36.3	86.2	22.8	0.0		0.0	71.9	21.2	
LOS by Move:	A	A	A		F	A	D	F	C	A		A	E	C	
HCM2k95thQ:	0	0	0		20	0	33	55	87	0		0	77	11	

Note: Queue reported is the number of cars per lane.

Mitigation

Level Of Service Computation Report
2000 HCM Operations Method (Future Volume Alternative)

Intersection #205 SR76 & Gird Rd

Cycle (sec): 150 | Critical Vol./Cap.(X): 0.911
Loss Time (sec): 12 | Average Delay (sec/veh): 24.1
Optimal Cycle: OPTIMIZED | Level Of Service: C

Street Name:	Gird Rd							SR76							
Approach:	North Bound				South Bound				East Bound				West Bound			
Movement:	L	-	T	-	R	L	-	T	-	R	L	-	T	-	R	L	-	T	-	R
Control:	Split Phase					Split Phase					Protected					Protected				
Rights:	Include					Include					Include					Include				
Min. Green:	5	5	5			5	5	5			5	5	5			5	5	5		
Y+R:	4.0	4.0	4.0			4.0	4.0	4.0			4.0	4.0	4.0			4.0	4.0	4.0		
Lanes:	0	0	0	0	0	1	0	0	0	1	1	0	2	0	0	0	0	2	0	1
Volume Module: >> Count Date: 18 Oct 2006 << PM Peak																				
Base Vol:	0	0	0			69	0	108			212	2527	0			0	1790	111		
Growth Adj:	1.00	1.00	1.00			1.00	1.00	1.00			1.00	1.00	1.00			1.00	1.00	1.00		
Initial Bse:	0	0	0			69	0	108			212	2527	0			0	1790	111		
Added Vol:	0	0	0			1	0	0			0	48	0			0	22	0		
PasserByVol:	0	0	0			0	0	0			0	0	0			0	0	0		
Initial Fut:	0	0	0			70	0	108			212	2575	0			0	1812	111		
User Adj:	1.00	1.00	1.00			1.00	1.00	1.00			1.00	1.00	1.00			1.00	1.00	1.00		
PHF Adj:	0.95	0.95	0.95			0.95	0.95	0.95			0.95	0.95	0.95			0.95	0.95	0.95		
PHF Volume:	0	0	0			74	0	114			223	2711	0			0	1907	117		
Reduct Vol:	0	0	0			0	0	0			0	0	0			0	0	0		
Reduced Vol:	0	0	0			74	0	114			223	2711	0			0	1907	117		
PCE Adj:	1.00	1.00	1.00			1.00	1.00	1.00			1.00	1.00	1.00			1.00	1.00	1.00		
MLF Adj:	1.00	1.00	1.00			1.00	1.00	1.00			1.00	1.00	1.00			1.00	1.00	1.00		
FinalVolume:	0	0	0			74	0	114			223	2711	0			0	1907	117		
Saturation Flow Module:																				
Sat/Lane:	1900	1900	1900			1900	1900	1900			1900	1900	1900			1900	1900	1900		
Adjustment:	1.00	1.00	1.00			0.93	1.00	0.83			0.93	0.93	1.00			1.00	0.93	0.83		
Lanes:	0.00	0.00	0.00			1.00	0.00	1.00			1.00	2.00	0.00			0.00	2.00	1.00		
Final Sat.:	0	0	0			1769	0	1583			1769	3538	0			0	3538	1583		
Capacity Analysis Module:																				
Vol/Sat:	0.00	0.00	0.00			0.04	0.00	0.07			0.13	0.77	0.00			0.00	0.54	0.07		
Crit Moves:								****				****				****				
Green/Cycle:	0.00	0.00	0.00			0.08	0.00	0.08			0.16	0.81	0.00			0.00	0.68	0.68		
Volume/Cap:	0.00	0.00	0.00			0.55	0.00	0.95			0.79	0.95	0.00			0.00	0.79	0.11		
Delay/Veh:	0.0	0.0	0.0			71.5	0.0	133.8			74.3	19.0	0.0			0.0	18.1	8.1		
User DelAdj:	1.00	1.00	1.00			1.00	1.00	1.00			1.00	1.00	1.00			1.00	1.00	1.00		
AdjDel/Veh:	0.0	0.0	0.0			71.5	0.0	133.8			74.3	19.0	0.0			0.0	18.1	8.1		
LOS by Move:	A	A	A			E	A	F			E	B	A			A	B	A		
HCM2k95thQ:	0	0	0			8	0	15			21	87	0			0	51	4		

Note: Queue reported is the number of cars per lane.

Mitigation

Level Of Service Computation Report
2000 HCM Operations Method (Future Volume Alternative)

Intersection #206 SR76 & Old Hwy 395

Cycle (sec): 95 | Critical Vol./Cap.(X): 0.950
Loss Time (sec): 16 | Average Delay (sec/veh): 39.9
Optimal Cycle: OPTIMIZED | Level Of Service: D

Street Name:	Old Hwy 395							SR76							
Approach:	North Bound				South Bound				East Bound				West Bound			
Movement:	L	-	T	-	R	L	-	T	-	R	L	-	T	-	R	L	-	T	-	R
Control:	Protected					Protected					Protected					Protected				
Rights:	Include					Include					Include					Ovl				
Min. Green:	5	5	5			5	5	5			5	5	5			5	5	5		
Y+R:	4.0	4.0	4.0			4.0	4.0	4.0			4.0	4.0	4.0			4.0	4.0	4.0		
Lanes:	2	0	1	0	1	2	0	1	0	1	1	0	3	0	1	1	0	3	0	1
Volume Module: >> Count Date: 25 Oct 2006 << PM Peak																				
Base Vol:	211	266	114			550	194	136			160	1709	177			176	1214	564		
Growth Adj:	1.00	1.00	1.00			1.00	1.00	1.00			1.00	1.00	1.00			1.00	1.00	1.00		
Initial Bse:	211	266	114			550	194	136			160	1709	177			176	1214	564		
Added Vol:	0	0	5			1	0	0			0	54	0			2	24	0		
PasserByVol:	0	0	0			0	0	0			0	0	0			0	0	0		
Initial Fut:	211	266	119			551	194	136			160	1763	177			178	1238	564		
User Adj:	1.00	1.00	1.00			1.00	1.00	1.00			1.00	1.00	1.00			1.00	1.00	1.00		
PHF Adj:	0.95	0.95	0.95			0.95	0.95	0.95			0.95	0.95	0.95			0.95	0.95	0.95		
PHF Volume:	222	280	125			580	204	143			168	1856	186			187	1303	594		
Reduct Vol:	0	0	0			0	0	0			0	0	0			0	0	0		
Reduced Vol:	222	280	125			580	204	143			168	1856	186			187	1303	594		
PCE Adj:	1.00	1.00	1.00			1.00	1.00	1.00			1.00	1.00	1.00			1.00	1.00	1.00		
MLF Adj:	1.00	1.00	1.00			1.00	1.00	1.00			1.00	1.00	1.00			1.00	1.00	1.00		
FinalVolume:	222	280	125			580	204	143			168	1856	186			187	1303	594		
Saturation Flow Module:																				
Sat/Lane:	1900	1900	1900			1900	1900	1900			1900	1900	1900			1900	1900	1900		
Adjustment:	0.90	0.98	0.83			0.90	0.98	0.83			0.93	0.89	0.83			0.93	0.89	0.83		
Lanes:	2.00	1.00	1.00			2.00	1.00	1.00			1.00	3.00	1.00			1.00	3.00	1.00		
Final Sat.:	3432	1862	1583			3432	1862	1583			1769	5083	1583			1769	5083	1579		
Capacity Analysis Module:																				
Vol/Sat:	0.06	0.15	0.08			0.17	0.11	0.09			0.10	0.37	0.12			0.11	0.26	0.38		
Crit Moves:		****				****						****				****				
Green/Cycle:	0.12	0.16	0.16			0.18	0.21	0.21			0.13	0.38	0.38			0.11	0.36	0.54		
Volume/Cap:	0.52	0.95	0.50			0.95	0.52	0.43			0.71	0.95	0.31			0.95	0.71	0.70		
Delay/Veh:	40.0	78.8	38.1			63.4	34.4	33.4			48.9	39.3	20.7			91.8	27.4	18.7		
User DelAdj:	1.00	1.00	1.00			1.00	1.00	1.00			1.00	1.00	1.00			1.00	1.00	1.00		
AdjDel/Veh:	40.0	78.8	38.1			63.4	34.4	33.4			48.9	39.3	20.7			91.8	27.4	18.7		
LOS by Move:	D	E	D			E	C	C			D	D	C			F	C	B		
HCM2k95thQ:	8	22	8			23	11	8			12	41	8			13	21	23		

Note: Queue reported is the number of cars per lane.

Mitigation

Level Of Service Computation Report
2000 HCM Operations Method (Future Volume Alternative)

Intersection #207 SR76 & I-15 SB Ramps

Cycle (sec): 130 Critical Vol./Cap.(X): 1.128
Loss Time (sec): 12 Average Delay (sec/veh): 79.0
Optimal Cycle: OPTIMIZED Level Of Service: E

Street Name:	I-15 SB Ramps									SR76		
Approach:	North Bound			South Bound			East Bound			West Bound		
Movement:	L - T - R			L - T - R			L - T - R			L - T - R		
Control:	Split Phase			Split Phase			Protected			Protected		
Rights:	Include			Include			Include			Include		
Min. Green:	5	5	5	5	5	5	5	5	5	5	5	5
Y+R:	4.0	4.0	4.0	4.0	4.0	4.0	4.0	4.0	4.0	4.0	4.0	4.0
Lanes:	0	0	0	1	1	0	0	2	0	0	2	0
Volume Module: >> Count Date: 25 Oct 2006 << PM Peak												
Base Vol:	0	0	0	322	13	855	0	1808	357	421	1074	0
Growth Adj:	1.00	1.00	1.00	1.00	1.00	1.00	1.00	1.00	1.00	1.00	1.00	1.00
Initial Bse:	0	0	0	322	13	855	0	1808	357	421	1074	0
Added Vol:	0	0	0	12	0	0	0	60	0	53	27	0
PasserByVol:	0	0	0	0	0	0	0	0	0	0	0	0
Initial Fut:	0	0	0	334	13	855	0	1868	357	474	1101	0
User Adj:	1.00	1.00	1.00	1.00	1.00	1.00	1.00	1.00	1.00	1.00	1.00	1.00
PHF Adj:	0.95	0.95	0.95	0.95	0.95	0.95	0.95	0.95	0.95	0.95	0.95	0.95
PHF Volume:	0	0	0	352	14	900	0	1966	376	499	1159	0
Reduct Vol:	0	0	0	0	0	0	0	0	0	0	0	0
Reduced Vol:	0	0	0	352	14	900	0	1966	376	499	1159	0
PCE Adj:	1.00	1.00	1.00	1.00	1.00	1.00	1.00	1.00	1.00	1.00	1.00	1.00
MLF Adj:	1.00	1.00	1.00	1.00	1.00	1.00	1.00	1.00	1.00	1.00	1.00	1.00
FinalVolume:	0	0	0	352	14	900	0	1966	376	499	1159	0
Saturation Flow Module:												
Sat/Lane:	1900	1900	1900	1900	1900	1900	1900	1900	1900	1900	1900	1900
Adjustment:	1.00	1.00	1.00	0.94	0.94	0.73	1.00	0.93	0.83	0.90	0.93	1.00
Lanes:	0.00	0.00	0.00	1.93	0.07	2.00	0.00	2.00	1.00	2.00	2.00	0.00
Final Sat.:	0	0	0	3434	134	2786	0	3538	1583	3432	3538	0
Capacity Analysis Module:												
Vol/Sat:	0.00	0.00	0.00	0.10	0.10	0.32	0.00	0.56	0.24	0.15	0.33	0.00
Crit Moves:						****		****		****		
Green/Cycle:	0.00	0.00	0.00	0.29	0.29	0.29	0.00	0.49	0.49	0.13	0.56	0.00
Volume/Cap:	0.00	0.00	0.00	0.36	0.36	1.13	0.00	1.13	0.48	1.13	0.59	0.00
Delay/Veh:	0.0	0.0	0.0	37.1	37.1	119.8	0.0	98.8	22.4	139.4	19.5	0.0
User DelAdj:	1.00	1.00	1.00	1.00	1.00	1.00	1.00	1.00	1.00	1.00	1.00	1.00
AdjDel/Veh:	0.0	0.0	0.0	37.1	37.1	119.8	0.0	98.8	22.4	139.4	19.5	0.0
LOS by Move:	A	A	A	D	D	F	A	F	C	F	B	A
HCM2k95thQ:	0	0	0	11	11	50	0	82	17	24	26	0

Note: Queue reported is the number of cars per lane.

Mitigation

Level Of Service Computation Report
2000 HCM Operations Method (Future Volume Alternative)

Intersection #208 SR76 & I-15 NB Ramps

Cycle (sec): 90 Critical Vol./Cap.(X): 0.988
Loss Time (sec): 12 Average Delay (sec/veh): 45.5
Optimal Cycle: OPTIMIZED Level Of Service: D

Street Name:	I-15 NB Ramps									SR76		
Approach:	North Bound			South Bound			East Bound			West Bound		
Movement:	L - T - R			L - T - R			L - T - R			L - T - R		
Control:	Split Phase			Split Phase			Protected			Protected		
Rights:	Include			Include			Include			Include		
Min. Green:	5	5	5	5	5	5	5	5	5	5	5	5
Y+R:	4.0	4.0	4.0	4.0	4.0	4.0	4.0	4.0	4.0	4.0	4.0	4.0
Lanes:	1	1	0	0	2	0	0	0	0	0	2	0
Volume Module:PM Peak												
Base Vol:	433	12	517	0	0	0	1230	711	0	0	722	295
Growth Adj:	1.00	1.00	1.00	1.00	1.00	1.00	1.00	1.00	1.00	1.00	1.00	1.00
Initial Bse:	433	12	517	0	0	0	1230	711	0	0	722	295
Added Vol:	0	0	119	0	0	0	0	72	0	0	80	5
PasserByVol:	0	0	0	0	0	0	0	0	0	0	0	0
Initial Fut:	433	12	636	0	0	0	1230	783	0	0	802	300
User Adj:	1.00	1.00	1.00	1.00	1.00	1.00	1.00	1.00	1.00	1.00	1.00	1.00
PHF Adj:	0.95	0.95	0.95	0.95	0.95	0.95	0.95	0.95	0.95	0.95	0.95	0.95
PHF Volume:	456	13	669	0	0	0	1295	824	0	0	844	316
Reduct Vol:	0	0	0	0	0	0	0	0	0	0	0	0
Reduced Vol:	456	13	669	0	0	0	1295	824	0	0	844	316
PCE Adj:	1.00	1.00	1.00	1.00	1.00	1.00	1.00	1.00	1.00	1.00	1.00	1.00
MLF Adj:	1.00	1.00	1.00	1.00	1.00	1.00	1.00	1.00	1.00	1.00	1.00	1.00
FinalVolume:	456	13	669	0	0	0	1295	824	0	0	844	316
Saturation Flow Module:												
Sat/Lane:	1900	1900	1900	1900	1900	1900	1900	1900	1900	1900	1900	1900
Adjustment:	0.92	0.92	0.73	1.00	1.00	1.00	0.90	0.93	1.00	1.00	0.93	0.83
Lanes:	1.95	0.05	2.00	0.00	0.00	0.00	2.00	2.00	0.00	0.00	2.00	1.00
Final Sat.:	3406	94	2786	0	0	0	3432	3538	0	0	3538	1583
Capacity Analysis Module:												
Vol/Sat:	0.13	0.13	0.24	0.00	0.00	0.00	0.38	0.23	0.00	0.00	0.24	0.20
Crit Moves:			****				****				****	
Green/Cycle:	0.24	0.24	0.24	0.00	0.00	0.00	0.38	0.50	0.00	0.00	0.24	0.24
Volume/Cap:	0.55	0.55	0.99	0.00	0.00	0.00	0.99	0.46	0.00	0.00	0.99	0.83
Delay/Veh:	30.5	30.5	65.4	0.0	0.0	0.0	49.5	14.7	0.0	0.0	61.7	46.1
User DelAdj:	1.00	1.00	1.00	1.00	1.00	1.00	1.00	1.00	1.00	1.00	1.00	1.00
AdjDel/Veh:	30.5	30.5	65.4	0.0	0.0	0.0	49.5	14.7	0.0	0.0	61.7	46.1
LOS by Move:	C	C	E	A	A	A	D	B	A	A	E	D
HCM2k95thQ:	12	12	28	0	0	0	31	13	0	0	31	20

Note: Queue reported is the number of cars per lane.

Mitigation

Level Of Service Computation Report
2000 HCM Operations Method (Future Volume Alternative)

Intersection #211 SR76 & Rice Cyn Rd

Cycle (sec): 100 | Critical Vol./Cap.(X): 0.587
Loss Time (sec): 12 | Average Delay (sec/veh): 11.8
Optimal Cycle: 47 | Level Of Service: B

Street Name:	Rice Cyn Rd								SR76						
Approach:	North Bound				South Bound				East Bound				West Bound		
Movement:	L	-	T	-	R	L	-	T	-	R	L	-	T	-	R	L	-	T	-	R
Control:	Protected					Protected					Protected					Protected				
Rights:	Include					Include					Include					Include				
Min. Green:	5	5	5			5	5	5			5	5	5			5	5	5		
Y+R:	4.0	4.0	4.0			4.0	4.0	4.0			4.0	4.0	4.0			4.0	4.0	4.0		
Lanes:	0	0	0	0	0	1	0	0	0	1	1	0	2	0	0	0	0	1	1	0

Volume Module: >> Count Date: 19 Oct 2006 <<

Base Vol:	0	0	0	40	0	75	110	909	0	0	1112	84								
Growth Adj:	1.00	1.00	1.00	1.00	1.00	1.00	1.00	1.00	1.00	1.00	1.00	1.00								
Initial Bse:	0	0	0	40	0	75	110	909	0	0	1112	84								
Added Vol:	0	0	0	25	0	0	0	287	0	0	128	11								
PasserByVol:	0	0	0	0	0	0	0	0	0	0	0	0								
Initial Fut:	0	0	0	65	0	75	110	1196	0	0	1240	95								
User Adj:	1.00	1.00	1.00	1.00	1.00	1.00	1.00	1.00	1.00	1.00	1.00	1.00								
PHF Adj:	0.95	0.95	0.95	0.95	0.95	0.95	0.95	0.95	0.95	0.95	0.95	0.95								
PHF Volume:	0	0	0	68	0	79	116	1259	0	0	1305	100								
Reduct Vol:	0	0	0	0	0	0	0	0	0	0	0	0								
Reduced Vol:	0	0	0	68	0	79	116	1259	0	0	1305	100								
PCE Adj:	1.00	1.00	1.00	1.00	1.00	1.00	1.00	1.00	1.00	1.00	1.00	1.00								
MLF Adj:	1.00	1.00	1.00	1.00	1.00	1.00	1.00	1.00	1.00	1.00	1.00	1.00								
FinalVolume:	0	0	0	68	0	79	116	1259	0	0	1305	100								

Saturation Flow Module:

Sat/Lane:	1900	1900	1900	1900	1900	1900	1900	1900	1900	1900	1900	1900								
Adjustment:	1.00	1.00	1.00	0.93	1.00	0.83	0.93	0.93	1.00	1.00	0.92	0.92								
Lanes:	0.00	0.00	0.00	1.00	0.00	1.00	1.00	2.00	0.00	0.00	1.86	0.14								
Final Sat.:	0	0	0	1769	0	1583	1769	3538	0	0	3250	249								

Capacity Analysis Module:

Vol/Sat:	0.00	0.00	0.00	0.04	0.00	0.05	0.07	0.36	0.00	0.00	0.40	0.40								
Crit Moves:						****	****				****									
Green/Cycle:	0.00	0.00	0.00	0.07	0.00	0.08	0.11	0.70	0.00	0.00	0.68	0.68								
Volume/Cap:	0.00	0.00	0.00	0.57	0.00	0.59	0.59	0.51	0.00	0.00	0.59	0.59								
Delay/Veh:	0.0	0.0	0.0	51.8	0.0	50.7	46.8	7.3	0.0	0.0	8.7	8.7								
User DelAdj:	1.00	1.00	1.00	1.00	1.00	1.00	1.00	1.00	1.00	1.00	1.00	1.00								
AdjDel/Veh:	0.0	0.0	0.0	51.8	0.0	50.7	46.8	7.3	0.0	0.0	8.7	8.7								
LOS by Move:	A	A	A	D	A	D	D	A	A	A	A	A								
HCM2k95thQ:	0	0	0	6	0	7	7	18	0	0	22	22								

Note: Queue reported is the number of cars per lane.

Mitigation

Level Of Service Computation Report
2000 HCM Unsignalized Method (Future Volume Alternative)

Intersection #212 SR76 & Couser Cyn Rd

Average Delay (sec/veh): 0.9 Worst Case Level Of Service: C[23.9]

Street Name:	Couser Cyn Rd								SR76							
Approach:	North Bound				South Bound				East Bound				West Bound			
Movement:	L	-	T	-	R	L	-	T	-	R	L	-	T	-	R	L	-	T	-	R
Control:	Stop Sign					Stop Sign					Uncontrolled					Uncontrolled				
Rights:	Include					Include					Include					Include				
Lanes:	1	0	0	0	1	0	0	1!	0	0	0	0	1	1	0	1	0	2	0	0

Volume Module:

Base Vol:	52	0	27	0	0	0	0	918	43	32	1052	0								
Growth Adj:	1.00	1.00	1.00	1.00	1.00	1.00	1.00	1.00	1.00	1.00	1.00	1.00								
Initial Bse:	52	0	27	0	0	0	0	918	43	32	1052	0								
Added Vol:	0	0	1	0	0	0	0	312	0	0	139	0								
PasserByVol:	0	0	0	0	0	0	0	0	0	0	0	0								
Initial Fut:	52	0	28	0	0	0	0	1230	43	32	1191	0								
User Adj:	1.00	1.00	1.00	1.00	1.00	1.00	1.00	1.00	1.00	1.00	1.00	1.00								
PHF Adj:	0.95	0.95	0.95	0.95	0.95	0.95	0.95	0.95	0.95	0.95	0.95	0.95								
PHF Volume:	55	0	29	0	0	0	0	1295	45	34	1254	0								
Reduct Vol:	0	0	0	0	0	0	0	0	0	0	0	0								
FinalVolume:	55	0	29	0	0	0	0	1295	45	34	1254	0								

Critical Gap Module:

Critical Gp:	6.8	xxxx	6.9	7.5	6.5	6.9	xxxxx	xxxx	xxxxx	4.1	xxxx	xxxxx								
FollowUpTim:	3.5	xxxx	3.3	3.5	4.0	3.3	xxxxx	xxxx	xxxxx	2.2	xxxx	xxxxx								

Capacity Module:

Cnflict Vol:	2032	xxxx	690	1988	2681	647	xxxx	xxxx	xxxxx	1350	xxxx	xxxxx								
Potent Cap.:	50	xxxx	388	36	22	414	xxxx	xxxx	xxxxx	506	xxxx	xxxxx								
Move Cap.:	46	xxxx	381	31	20	407	xxxx	xxxx	xxxxx	502	xxxx	xxxxx								
Total Cap:	207	182	xxxxx	149	165	xxxxx	xxxx	xxxx	xxxxx	xxxx	xxxx	xxxxx								
Volume/Cap:	0.26	xxxx	0.08	0.00	0.00	0.00	xxxx	xxxx	xxxx	0.07	xxxx	xxxx								

Level Of Service Module:

2Way95thQ:	1.0	xxxx	0.3	xxxx	xxxx	xxxxx	xxxx	xxxx	xxxxx	0.2	xxxx	xxxxx								
Control Del:	28.6	xxxx	15.2	xxxxx	xxxx	xxxxx	xxxxx	xxxx	xxxxx	12.7	xxxx	xxxxx								
LOS by Move:	D	*	C	*	*	*	*	*	*	B	*	*								
Movement:	LT -	LTR -	RT	LT -	LTR -	RT	LT -	LTR -	RT	LT -	LTR -	RT								
Shared Cap.:	xxxx	xxxx	xxxxx	xxxx	0	xxxxx	xxxx	xxxx	xxxxx	xxxx	xxxx	xxxxx								
SharedQueue:	xxxxx	xxxx	xxxxx	xxxxx	xxxx	xxxxx	xxxxx	xxxx	xxxxx	xxxxx	xxxx	xxxxx								
Shrd ConDel:	xxxxx	xxxx	xxxxx	xxxxx	xxxx	xxxxx	xxxxx	xxxx	xxxxx	xxxxx	xxxx	xxxxx								
Shared LOS:	*	*	*	*	*	*	*	*	*	*	*	*								
ApproachDel:	23.9			xxxxxx			xxxxxx			xxxxxx										
ApproachLOS:	C			*			*			*										

Note: Queue reported is the number of cars per lane.

Mitigation

Level Of Service Computation Report
2000 HCM Operations Method (Future Volume Alternative)

Intersection #222 SR76 & Cole Grade Rd

Cycle (sec):	90	Critical Vol./Cap.(X):	0.663
Loss Time (sec):	12	Average Delay (sec/veh):	16.3
Optimal Cycle:	60	Level Of Service:	B

Street Name:	Cole Grade Rd							SR76					
Approach:	North Bound			South Bound			East Bound			West Bound			
Movement:	L	T	R	L	T	R	L	T	R	L	T	R	
Control:	Permitted			Permitted			Protected			Protected			
Rights:	Include			Include			Include			Include			
Min. Green:	5	5	5	5	5	5	5	5	5	5	5	5	
Y+R:	4.0	4.0	4.0	4.0	4.0	4.0	4.0	4.0	4.0	4.0	4.0	4.0	
Lanes:	1 0	0 1	0	0 0	0 1	0	1 0	1 0	1	1 0	1 0	1	
Volume Module:													
Base Vol:	154	5	71	0	2	5	2	557	210	73	802	4	
Growth Adj:	1.00	1.00	1.00	1.00	1.00	1.00	1.00	1.00	1.00	1.00	1.00	1.00	
Initial Bse:	154	5	71	0	2	5	2	557	210	73	802	4	
Added Vol:	2	0	0	0	0	3	1	3	1	0	6	0	
PasserByVol:	0	0	0	0	0	0	0	0	0	0	0	0	
Initial Fut:	156	5	71	0	2	8	3	560	211	73	808	4	
User Adj:	1.00	1.00	1.00	1.00	1.00	1.00	1.00	1.00	1.00	1.00	1.00	1.00	
PHF Adj:	0.95	0.95	0.95	0.95	0.95	0.95	0.95	0.95	0.95	0.95	0.95	0.95	
PHF Volume:	164	5	75	0	2	8	3	589	222	77	851	4	
Reduct Vol:	0	0	0	0	0	0	0	0	0	0	0	0	
Reduced Vol:	164	5	75	0	2	8	3	589	222	77	851	4	
PCE Adj:	1.00	1.00	1.00	1.00	1.00	1.00	1.00	1.00	1.00	1.00	1.00	1.00	
MLF Adj:	1.00	1.00	1.00	1.00	1.00	1.00	1.00	1.00	1.00	1.00	1.00	1.00	
FinalVolume:	164	5	75	0	2	8	3	589	222	77	851	4	
Saturation Flow Module:													
Sat/Lane:	1900	1900	1900	1900	1900	1900	1900	1900	1900	1900	1900	1900	
Adjustment:	0.74	0.84	0.84	1.00	0.87	0.87	0.93	0.98	0.83	0.93	0.98	0.83	
Lanes:	1.00	0.07	0.93	0.00	0.20	0.80	1.00	1.00	1.00	1.00	1.00	1.00	
Final Sat.:	1415	105	1496	0	332	1329	1769	1862	1583	1769	1862	1583	
Capacity Analysis Module:													
Vol/Sat:	0.12	0.05	0.05	0.00	0.01	0.01	0.00	0.32	0.14	0.04	0.46	0.00	
Crit Moves:	****						****				****		
Green/Cycle:	0.16	0.16	0.16	0.00	0.16	0.16	0.06	0.60	0.60	0.10	0.65	0.65	
Volume/Cap:	0.71	0.30	0.30	0.00	0.04	0.04	0.03	0.53	0.23	0.41	0.71	0.00	
Delay/Veh:	45.1	33.7	33.7	0.0	31.7	31.7	40.3	11.2	8.6	39.2	12.3	5.6	
User DelAdj:	1.00	1.00	1.00	1.00	1.00	1.00	1.00	1.00	1.00	1.00	1.00	1.00	
AdjDel/Veh:	45.1	33.7	33.7	0.0	31.7	31.7	40.3	11.2	8.6	39.2	12.3	5.6	
LOS by Move:	D	C	C	A	C	C	D	B	A	D	B	A	
HCM2k95thQ:	11	4	4	0	1	1	0	18	6	5	28	0	

Note: Queue reported is the number of cars per lane.

APPENDIX J

FRONTAGE IMPROVEMENTS

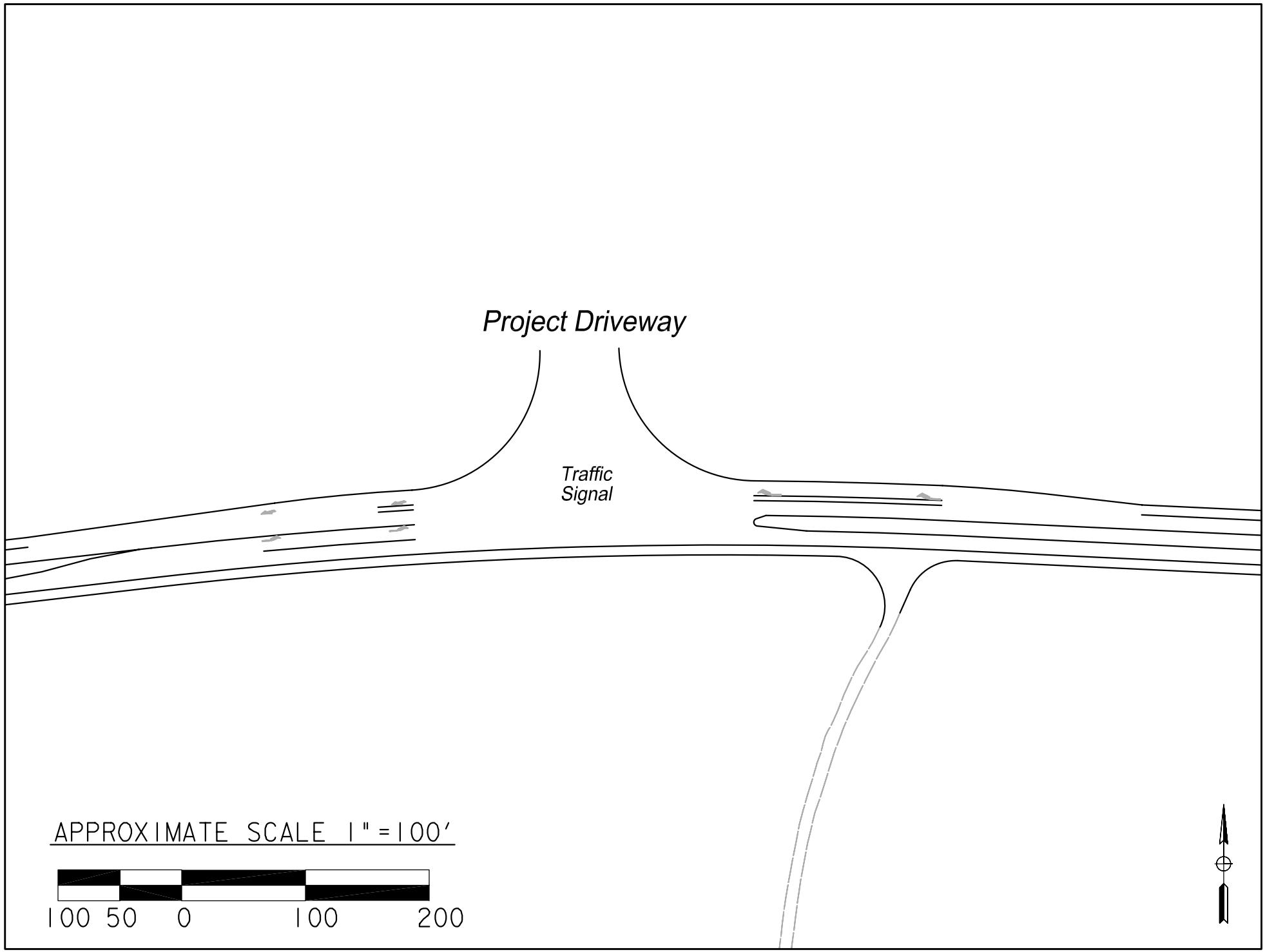
Project Driveway
Traffic
Signal
APPROXIMATE SCALE 1" = 100'
100 50 0 100 200

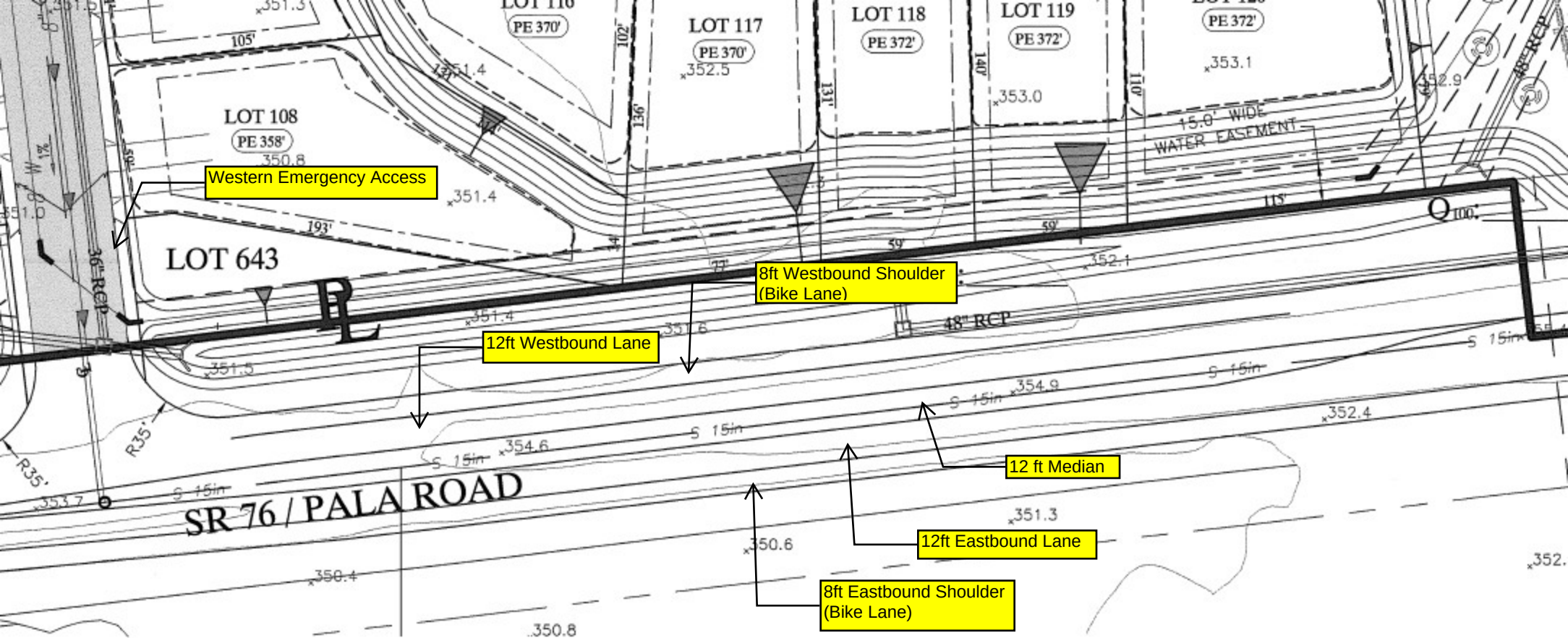
LOT 108
PE 358'
LOT 643
LOT 116
PE 370'
LOT 117
PE 370'
LOT 118
PE 372'
LOT 119
PE 372'
PE 372'
15.0' WIDE
WATER EASEMENT
Western Emergency Access
8ft Westbound Shoulder
(Bike Lane)
12ft Westbound Lane
12 ft Median
12ft Eastbound Lane
8ft Eastbound Shoulder
(Bike Lane)
48" RCP
36" RCP
SR 76 / PALA ROAD

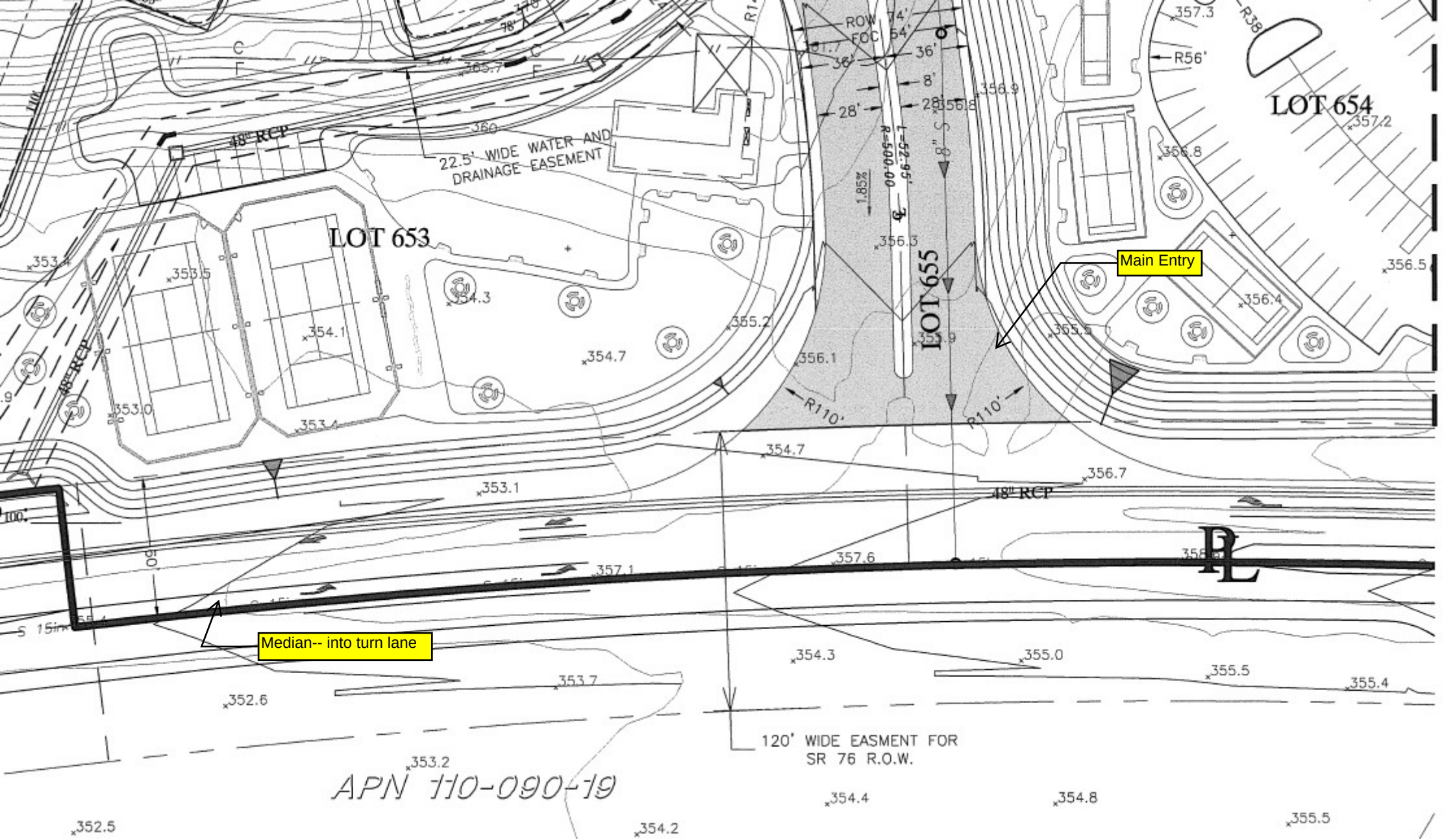
LOT 653
LOT 654
LOT 655
Main Entry
Median-- into turn lane
22.5' WIDE WATER AND DRAINAGE EASEMENT
120' WIDE EASMENT FOR SR 76 R.O.W.
APN 110-090-19
48" RCP
R110'
R56'
R38'
R=500.00'
L=52.95'
1.85%
ROW
FOC
8" SS
PL