REQUIREMENTS FOR PLACING A SEA CARGO CONTAINER ON A PRIVATE LOT

ZONING DIVISION

Pursuant to Section 6162 of the Zoning Ordinance, a building permit is required to place a Sea Cargo Container on a lot and a demolition permit to remove a Sea Cargo Container

A. Requirements: before placing a Sea Cargo Container on a lot, you must fully comply with Section 6162 of the County of San Diego Zoning Ordinance:

1. Property owners claiming to be an agricultural operation must provide substantial evidence of use, **such as aerial photos of the last 30 years, showing the agricultural operation in place**, or dated photographs, business tax records, business receipts, customer orders, or other significant information related to an active agricultural operation. The **burden of proof of use is the responsibility of the property owner**, they must show evidence that the agricultural operation has been in place for the last 30 years; or was legally established with the appropriate permits.

2. On building sites where the primary use is residential a Sea Cargo Container shall only be allowed if it is not visible from that portion of any road (whether public, private, and/or private road easement) that directly abuts the subject parcel (See next page for illustration only). If existing landscaping is used as screening, it shall be indicated on the building plans and photos shall be submitted as evidence. If fencing is used as screening, please see Section 6708 of the Zoning Ordinance for fencing regulations.

3. On building sites of less than 2 acres (net) where the primary use is residential only one Sea Cargo Container is allowed, not exceeding 320 square feet and the container is only permitted for up to 180 consecutive days, starting from the date of permit issuance. A demolition permit is required to confirm removal of the Sea Cargo Container. On building sites of more than 2 acres (net) with a legally established primary use, a Sea Cargo Container(s) is allowed if it complies with the other requirements of Section 6162.

4. Sea Cargo Containers must meet setback requirements for accessory structures.

5. Sea Cargo Containers can normally only be used for storage. However, if it is used for any other approved purpose, such as a pool, residence, or recreation room, etc. the Sea Cargo Container must be completely screened, so it does not look like a Sea Cargo Container anymore.

6. A Sea Cargo Container may be allowed in commercial and industrial zoned areas only if there is a legally established primary use on-site and all parking requirements are maintained.

7. Sea Cargo Containers are allowed in all zones temporarily to store building materials during the construction pursuant to an active building permit. If the building permit is expired, the Sea Cargo Container shall be removed with a demolition permit.

ILLUSTRATION: Possible location of a Sea Cargo Container, because the container is not visible from abutting street. (A street is a County road, State highway, public road, street or alley, or private thoroughfare or easement (or proposed private thoroughfare or easement shown on a recorded parcel map) not less than 10 feet in width which affords primary access to an abutting lot.)

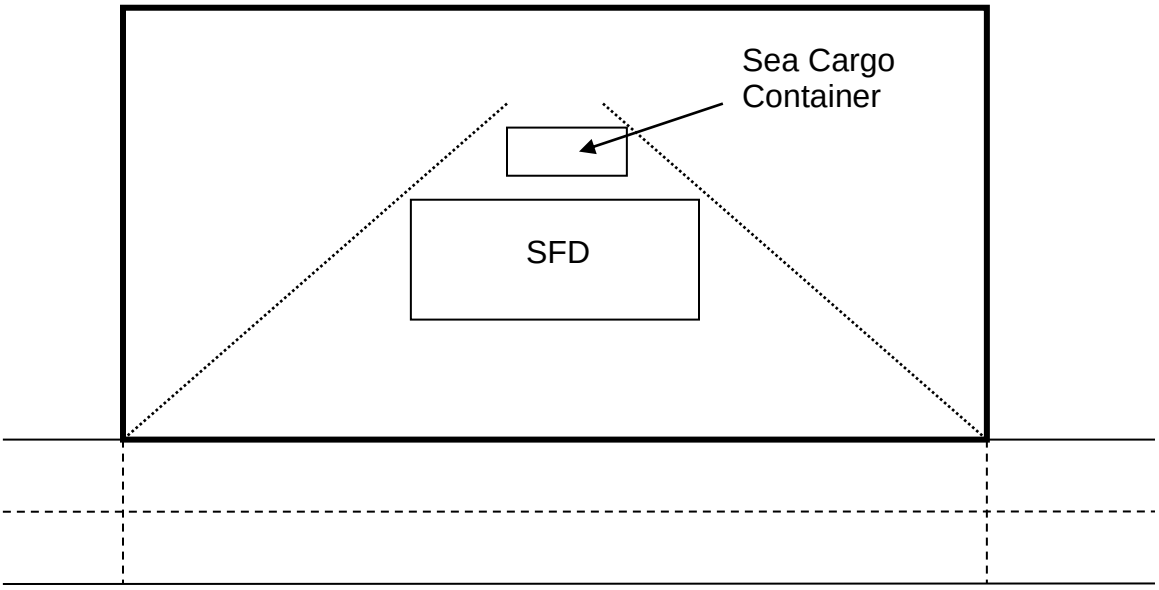

ILLUSTRATION: Possible location of a Sea Cargo Container, because the container is screened by an existing fence (see Section 6708 of the Zoning Ordinance for fencing regulations).
A Sea Cargo Container can only be screened by existing landscaping (new landscaping does not qualify as screening).

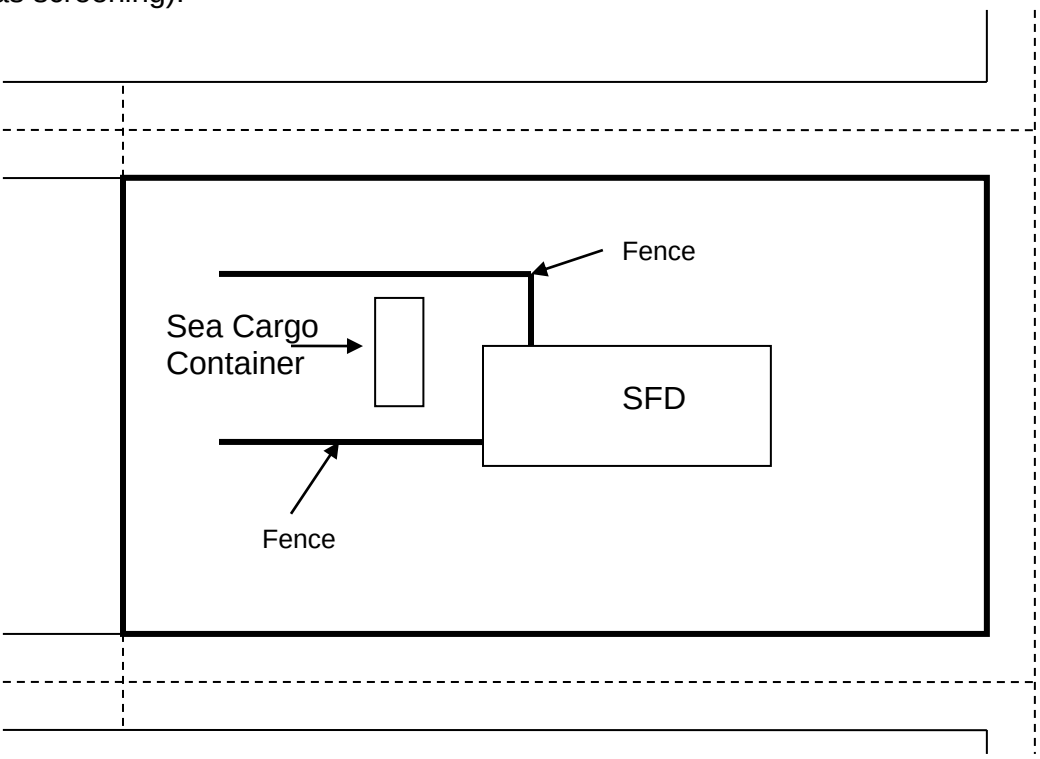

8. The square footage of the Sea Cargo Container shall be added to the allowable combined square footage of all existing and/or proposed accessory structures pursuant to 6156.g.

Lot Size (gross)	Det. Accessory Structures in all Res, Ag & S92 Zones (formerly 6156.g and 6156.h)
< 1/2 ac	1,450 sf *(only in zones subject to a Residential Use Regulation and in the S88 Use Regulations where residential uses occur)*
< 1 ac	2,000 sf
1 ac - <2 ac	3,000 sf
2 ac - <4 ac	4,000 sf
4 ac - <8 ac	5,600 sf
8 ac - <12 ac	6,400 sf
12 ac - <16 ac	7,200 sf
16 ac or more	8,000 sf

9. The exterior of every Sea Cargo Container shall be painted with one of the approved colors. The color shall be indicated on the plot plan. The following colors are approved:

   a. Flat, non-reflective dark green to match the surrounding area;
   b. Flat, non-reflective white (this color is typically limited to AG uses);
   c. Flat, non-reflective, tan to match the surrounding area; or,
   d. Other solid neutral color that matches the surrounding natural environment (applicant must provide pictures of surrounding area to show compliance)

10. If you have an existing Sea Cargo Container that was legally placed on your parcel (with a building permit and before May 18, 2007) you are allowed to continue the use of the Sea Cargo Container as a non-conforming use for two more years. At or before May 17, 2009, the Sea Cargo Container shall be removed from the parcel with a demolition permit or you have to obtain a new building permit and be fully in compliance with Section 6162 of the Zoning Ordinance.